Transmittal Page

| Product | Title | Part Number |
|---|---|---|
| **8825/8830 Printer** | **Service Manual** | **701P15051** |
| Status<br>**SUPERSEDES**<br>**Replaces 701P15050 dated May 1999** | | Date<br>**January 2002** |

THE DOCUMENT COMPANY
XEROX

# 8825/ 8830 Printer Service Manual

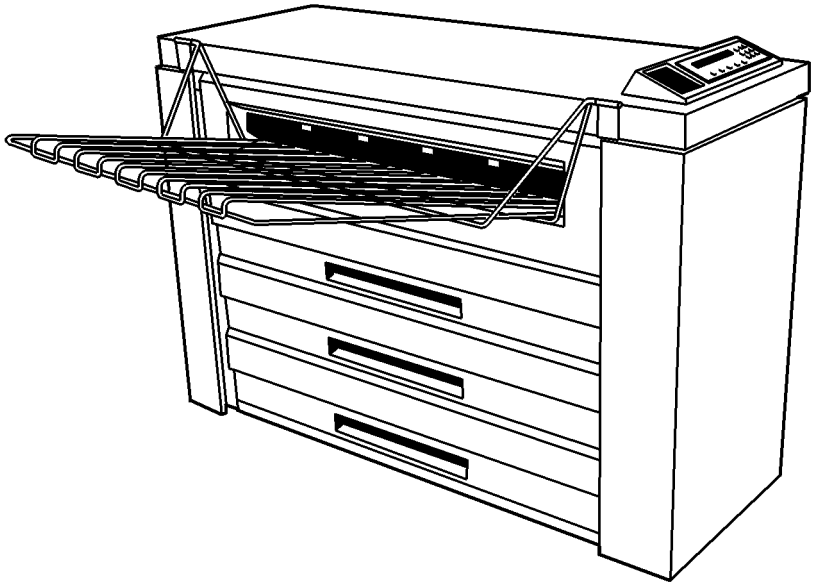


**CAUTION**

Certain components in the 8825/ 8830 Printer are susceptible to damage from electrostatic discharge. Observe all ESD procedures to avoid component damage.

**701P15051**
**January 2002**

## NOTICE

While every care has been taken in the preparation of this manual, no liability will be accepted by Xerox Corporation arising out of any inaccuracies or omissions.

## NOTICE

All service documentation is supplied to Xerox external customers for informational purposes only. Xerox service documentation is intended for use by certified product trained service personal only. Xerox does not warrant or represent that such documentation is complete, nor does Xerox represent or warrant that it will notify or provide to such customer any future changes to this documentation. Customer performed service of equipment, or modules, components or parts of such equipment may affect the warranty offered by Xerox with respect to such equipment. You should consult the applicable warranty for its terms regarding customer or third party provided service. If the customer services such equipment, modules, components or parts thereof, the customer releases Xerox from any and all liability for the customer actions, and the customer agrees to indemnify, defend and hold Xerox harmless from any third party claims which arise directly or indirectly from such service.

Prepared by:
Xerox Corporation
800 Phillips Road
Bldg. 845-17S
Webster, New York 14580-9791
USA

© 1998, 1999, 2000, 2001, 2002 by Xerox Corporation. All rights reserved.
Xerox®, XES®, AccXES®, and The Document Company®
are trademarks of Xerox Corporation.
Xerox product names mentioned in this publication are trademarks of the
XEROX CORPORATION.

# Introduction

About this Manual ..... iii
Organization ..... iii
How to Use This Manual ..... iv
Repair Analysis Procedures (RAPs) ..... v
Repair / Adjustment Procedures ..... v

# About this Manual

This manual is part of a documentation system that includes the training.

This manual contains Repair Analysis Procedures (RAPs), Repair Procedures, Adjustment Procedures, Parts List, Diagnostic Procedures, Installation Procedures, Wiring Data and BSDs.

This manual will enable the Service Representative to repair the 8825/8830 printers. Those service procedures affected by the 8825 configuration differences will be identified using the 8825 product name or Tag number.

# Organization

This manual consists of eight sections. The title and description of each section are listed below.

## Section 1. - Service Call Procedures

This section contains the following:

- Call Flow Procedure
- Initial Actions/ System Checks
- Print Defect Isolation Procedure
- Workstation Checkout Procedure
- Status Code Entry Chart
- Message Display Entry Chart
- Maintenance Procedures
- Callback
- System Checkout/ Final Action

**Call Flow Procedure**

The Call Flow Procedure is a list of activities to be performed on each service call.

**Initial Actions/ System Checks**

This procedure is designed to identify and classify the problem and to refer you to the appropriate RAP in order to repair the problem. When the problem has been repaired, perform the Final Action.

**Print Defect Isolation Procedure**

This procedure directs the CSE to make test prints, perform test procedures to identify the cause of a print defect.

**Workstation Checkout Procedure**

This procedure is designed to ensure that the printer is correctly set up to run and communicate with other elements. It consists of a series of connection checks, configuration test prints, PING tests, and tests made from a laptop PC.

**Status Code Entry Chart**

This table provides a list of status codes, a description of the problem, the components that are affected, RAPs that may resolve the problem, as well as BSD references and Parts List references.

**Message Display Entry Chart**

This table contains a list of messages that may be generated by the printer, their cause, clearance procedures, and BSD references.

**Maintenance Procedures**

The Maintenance Procedures identifies functional checks and cleaning operations that must be performed on every Normal Call. It also identifies those activities that can be performed as needed or as scheduled.

**Callback**

This service is performed when the CSE has been called back to correct a problem that was thought to have been recently corrected. The Callback is a short procedure performed on only that subsystem that caused the original service cal

**System Checkout / Final Action**

This procedure is used to verify that the printer is operating correctly after a repair, and that the correct steps are taken to close out a service call.

### Section 2. - Repair Analysis Procedures (RAPs)

This section contains the Repair Analysis Procedures (RAPs) necessary to repair the faults. When using a RAP, always exit the procedure when the fault is fixed. Do not perform the remaining steps.

### Section 3. - Image Quality Repair Analysis Procedures (RAPs)

This section contains the Repair Analysis Procedures (RAPs) necessary to repair the image quality faults. Refer to "How to Use the Image Defect Definitions" to compare the image defect to the definitions. Once you have determined the definition that best describes the defect, go to the section contents page to find the appropriate RAP. When using a RAP, always exit the procedure when the fault is fixed. Do not perform the remaining steps.

### Section 4. - Repair / Adjustment

This section contains the repair and adjustment procedures for the 8825/8830 printers.

### Section 5. - Parts List

This section contains the detailed Parts List for the 8825/8830 printers.

### Section 6. - General Procedures

This section contains Diagnostic Procedures, Installation Procedures, and General Information, which includes Product Specifications for the 8825/8830 printers.

### Section 7. - Wiring Data

This section contains the BSDs.

## How to Use This Manual

The Service Call Procedures will direct you to the appropriate Section of the Service Manual.

You should begin the service call with the Initial Actions/ System Checks Procedure. From there, you will be referred to either Section 2, Status Indicator RAPs, Section 3, Image Quality RAPs, or Section 7 BSDs.

If you are sent to Section 3, compare the image defect to the print quality definitions. Once you have determined the definition that best describes the copy defect, go to the section contents. The section contents will direct you to an image quality RAP. The RAP has a list of probable causes and corrective actions. From these RAPs you may be referred to other sections of the manual to make checks, Adjustments, or to replace parts.

When you have made a Repair, always go to the Call Flow Procedure to finish the call.

## Repair Analysis Procedures (RAPs)

A RAP is either a table of faults and possible solutions, or a series of steps designed to lead you to the cause of a problem. In each step, you will perform an action or observe an occurrence. For fault tree RAPS, at each step, a statement is made that has a Yes (Y) or No (N) answer.

If the answer is NO, perform the action following the NO. If the answer is YES, proceed to the next step.

When several items are listed, perform them in the order listed.

Proceed through the steps only until the observed problem is isolated and solved. Then evaluate the unit for proper performance. If a further defect is observed, go to the appropriate RAP and perform the steps it contains until the additional fault is located and repaired.

## Repair / Adjustment Procedures

The repair procedures provide detailed steps on how to remove and replace components. The adjustment procedures provide detailed steps on how to check and adjust components. Some units have been modified by various design changes. Each change or modification is labeled with a Tag/ MOD (modification) number. The Tag/ MOD numbers are identified in the Change Tag/ MOD Index in Section 6 of this Service Manual.

When a modification affects how a particular procedure is performed, the procedure or steps are identified with either a **W/ Tag/ MOD** or a **W/ O Tag/ MOD** statement. Each procedure or step that is affected by a modification is identified with the statement, **W/ Tag/ MOD**, followed by the modification number. The **W/** in the statement indicates that this step must be performed on units that are assembled **with** that specific modification.

When the procedure or steps are not affected by a particular modification, they are identified with the statement, **W/ O Tag/ MOD**, followed by the modification number. The **W/ O** in the statement indicates that this step must be performed on units assembled **without** that specific modification.

# 1 Service Call Procedures

Introduction ..... 1-3

**Call Flow**

Call Flow Procedure ..... 1-5
Initial Actions/Systems Checks ..... 1-5
Print Defect Isolation Procedure ..... 1-6
Workstation Checkout Procedure ..... 1-6
Status Code Entry Chart ..... 1-7
Message Display Entry Chart ..... 1-11
Maintenance Procedures ..... 1-12
Callback ..... 1-15

**System Checkout / Final Action**

System Checkout / Final Action ..... 1-17

# Introduction

The Service Call Procedures are designed to assist the Service Representative to identify printer faults, perform the necessary corrective action and perform the correct Maintenance Procedures. The Service Call Procedures are designed to be used with the Printer Service Manual and is the entry level for all service calls.

- Call Flow Procedure - The Call Flow Procedure is a list of activities to be performed on each service call.
- Initial Actions / System Checks - This procedure is designed to identify and classify the printer problem and to refer you to the appropriate RAP in order to repair the problem. When the problem has been repaired, perform the System Checkout / Final Action.
- Print Defect Isolation Procedure - This procedure directs the CSE to make test prints, perform test procedures to identify the cause of a print defect.
- Workstation Checkout Procedure - This procedure is designed to ensure that the printer is correctly set up to run and communicate with other elements. It consists of a series of connection checks, configuration test prints, PING tests, and tests made from a laptop PC.
- Status Code Entry Chart - This table contains a list of Status Codes, their related components, the corresponding RAP (Repair Analysis Procedure), BSD (Block Schematic Diagram), Component Code and Parts List reference. The chart is designed to direct you to the appropriate Clearance Procedure. When the Status Code problem has been repaired, refer to the Call Flow Diagram and continue the Service Call.
- Message Display Entry Chart - This table contains a list of messages that may be generated by the printer, their cause, clearance procedures, and BSD references.
- Maintenance Procedures - This table contains a list of messages that may be generated by the printer, their cause, clearance procedures, and BSD references.
- Callback - This service is performed when the CSE has been called back to correct a problem that was thought to have been recently corrected. The Callback is a short procedure performed on the subsystem that caused the original service call.
- System Checkout / Final Action - The purpose of this procedure is to record the media feet count and to make a record in the machine log book of the service activities that were performed. The Final Action is designed to ensure that the print is transported correctly and to ensure that image quality is within specification.

# Call Flow Procedure

## Procedure

Perform the following:

1. Initial Actions.

**There has been more than 5 customer work days or 500 feet (150 meters) since the last service call.**

**Y N**

Perform the following:

1. Perform the Subsystem Checks for the subsystem that caused the problem.
2. System Checkout \ Final Action

Perform the following:

1. Maintenance Procedure for all subsystems.
2. System Checkout / Final Action.

# Initial Actions/Systems Checks

1. Ask the operator to try to duplicate the problem.
2. Ask the operator to cancel all of the print jobs in the print queue.
3. Review the logbook for previous service on the system.
4. Check the Recent Fault Log for trends:
   a. With a Controller - Print out the configuration sheet through the Utilities Menu. The last 25 faults are listed on the upper-right side of the sheet.
   b. Without a Controller - Enter [0391]. The display will scroll through the error codes two at a time.
5. Analyze the frequency of the fault codes and refer to the Status Code Entry Chart to troubleshoot the problem:
   a. C or E codes should occur no more frequently than once per 1000 linear feet.
   b. All Cutter faults should occur no more frequently than once per 10,000 linear feet.

***NOTE:*** *E4-09, Cx-04, and Cx-05 are out-of-media codes and will occur once per 500 linear feet. Also, 001 and 002 codes are power on/off. Question the operator if the faults are excessive.*

6. Record the readings from the media length counter.

   ***NOTE:*** *Perform each of the following steps in sequence, unless directed elsewhere.*

7. If there is a fault indicator displayed, determine the type of fault.
   - If a status code is displayed, go to the Status Code Entry Chart in this Section.
   - If there is a message displayed, go to the Message Display Entry Chart in this Section
8. If there is a print quality problem, go to the Print Defect Isolation Procedure in this Section.
9. If the Printer Control Panel is blank, go to OF-1 Control Panel RAP in Section 2 of this service manual.
10. If the Printer Control Panel displays numbers during printer warm up, go to svc.8830prt.2974 in Section 2 of this service manual.
11. If the customers lights flicker when the machine is turned on, go to OF-3 Fuser Ballast RAP.

# Print Defect Isolation Procedure

## Procedure

1. Go to Special Tests 0955 in Section 6 of this service manual. Select option 5 (600 mm print length on 36 inch wide paper) and make an internal test print.
2. If the defect is still present, go to Print Quality Initialization Procedure in Section 3 of this service manual.
3. Go to Workstation Checkout Procedure located in this Section.

# Workstation Checkout Procedure

## Initial Actions

1. Ensure that all connectors are seated correctly at the Controller.
2. If 8825/8830 DDS configuration, ensure that the SCSI cable from the Scanner is connected to the scanner connector on the Controller.
3. The Configuration Test Print provides troubleshooting information that will be used later. Ensure that the communication parameters are set correctly.

## Procedure

***NOTE:*** *Do each of the steps in sequence, unless directed otherwise.*

1. Ask the customer to print a different file from the workstation. If the file prints OK, then the original file might be corrupt.
2. If the workstation is connected to a network, go to 3.. Otherwise, go to 5..
3. Ask the customer to obtain the IP address of another device on the network. Ask the customer to go to the DOS prompt and to use the PING function to test the connection to the other device. If the PING test is successful, then go to 4.. Otherwise, notify the customer that there seems to be a network problem.
4. Obtain the IP address for the Controller from the Configuration Test Print. Ask the Customer to use the PING function to test the connection to the Controller. if the test is successful, then go to step 5. Otherwise, go to FRU (Field Replaceable Unit) Test in Section 2 of the Controller Service Manual.
5. Connect the laptop computer to the parallel port on the Controller. Open the Document Submission Tool. Insert the test file disk in the laptop. Send a test file to the Printer. if the defect is present, go to FRU (Field Replaceable Unit) Test in Section 2 of the Controller Service Manual. Otherwise, ask the customer to reload the print drivers. If the problem still exists, there could be a defective cable.

# Status Code Entry Chart

**Table 1 Status Code Entry Chart**

| Status Code | Description | Components | BSD Ref | PL Ref |
|---|---|---|---|---|
| C1-01<br>C2-01<br>C3-01<br><br>No RAP | **Position sensor error**<br>The Roll 1, 2, or 3 position sensor did not actuate or deactuate. | Roll 1 position sensor (Q1)<br>Roll 2 position sensor (Q2) 8825 with Tag/MOD 90<br>Roll 3 position sensor (Q3)<br>Main PWB (A3)<br>***NOTE: The sensors are interchangeable.*** | BSD 7.2<br>BSD 7.3<br>BSD 7.4 | PL 7.1<br>PL 1.1A |
| C1-04 | **Media registration sensor error**<br>The media sensor did not actuate or deactuate when feeding from roll 1, 2, or 3. | Media registration sensor (A21Q1)<br>Main PWB (A3)<br>Driver PWB<br>Registration Rolls<br>Transport Driver Motor<br>Motor Driver PWB | BSD 8.1 | PL 8.2<br>PL 1.1A<br>PL 8.3 |
| C1-05<br>C2-05<br>C3-05<br><br>No RAP | **Motion sensor error**<br>Motion was not detected or the media stopped moving when feeding from roll 1, 2, or 3. | Roll 1 motion sensor (Q4)<br>Roll 2 motion sensor (Q5) 8825 with Tag/MOD 90<br>Roll 3 motion sensor (Q6)<br>Main PWB (A3)<br>Driver PWB<br>Motor Driver PWB<br>Media Feed Rolls<br>Media Feed Clutch<br>Media Feed Drive Motor<br>***NOTE: The sensors and the clutches are interchangeable.*** | BSD 7.2<br>BSD 7.3<br>BSD 7.4<br>BSD 7.1 | PL 7.1<br>PL 1.1A<br>PL 7.2 |
| C3-06<br>No RAP | **Roll 2 position sensor error**<br>8825 with Tag/MOD 90<br>Media was not detected at the Roll 2 position sensor when feeding from roll 3. | Roll 2 position sensor (Q2) 8825 with Tag/MOD 90<br>Main PWB (A3) | BSD 7.3 | PL 7.1<br>PL 1.1A |
| C3-07<br>No RAP | **Roll 1 position sensor error**<br>Media was not detected at the Roll 1 position sensor when feeding from Roll 3. | Roll 1 position sensor (Q1)<br>Main PWB (A3) | BSD 7.2 | PL 7.1<br>PL 1.1A |

**Table 1 Status Code Entry Chart**

| Status Code | Description | Components | BSD Ref | PL Ref |
|---|---|---|---|---|
| C1-09<br>C2-09<br>C3-09<br>No RAP | **Firmware error**<br>This is a firmware problem. Press power off (0) then power on (1). If problem persists, replace the firmware. | | | PL 1.1A |
| C1-19<br>C2-19<br>C3-19<br>No RAP | **This is a Firmware problem**<br>This is a firmware problem. Press power off (0) then power on (1). If problem persists, replace the firmware. | | | PL 1.1A |
| C1-29<br>C2-29<br>C3-29<br>No RAP | **This is a Firmware problem.**<br>This is a firmware problem. Press power off (0) then power on (1). If problem persists, replace the firmware. | | | PL 1.1A |
| C1-39<br>C2-39<br>C3-39<br>No RAP | **This is a Firmware problem.**<br>This is a firmware problem. Press power off (0) then power on (1). If problem persists, replace the firmware. | | | PL 1.1A |
| C1-59<br>C2-59<br>C3-59<br>RAP | **Light reflecting off of a piece of media or from rear of drawer or a baffle.** | Roll 1 position sensor (Q1)<br>Roll 2 position sensor (Q2); 8825 with Tag/MOD 90<br>Roll 3 position sensor (Q3)<br>Main PWB (A3) | BSD 7.2<br>BSD 7.3<br>BSD 7.4 | PL 1.1A<br>PL 7.1 |
| C4-24<br><br>No RAP | **Registration sensor error**<br>The cut sheet does not reach the media registration sensor in time. | Media registration sensor (A21Q1)<br>Main PWB (A3)<br>Registration Rolls<br>Transport Drive Motor<br>Transport Motor Driver PWB<br>Cut Sheet Feed Clutch / Rolls<br>Driver PWB | BSD 8.1 | PL 8.2<br>PL 1.1A<br>PL 7.2<br>PL 8.3 |
| C4-34<br><br>No RAP | **Sheet feed sensor error**<br>The sheet feed sensor deactuated too early while making a print. The operator may have removed the cut sheet media. | Sheet feed sensor (Q2) 8825 with Tag/MOD 90<br>Main PWB (A3) | BSD 8.1 | PL 8.4<br>PL 1.1A |

**Table 1 Status Code Entry Chart**

| Status Code | Description | Components | BSD Ref | PL Ref |
|---|---|---|---|---|
| C4-49 No RAP | **This is a Firmware problem** This is a firmware problem. Press power off (0) then power on (1). If problem persists, replace the firmware. | | | PL 1.1A |
| E2-01 No RAP | **Media registration sensor error** The media trail edge jammed in the media registration sensor area. | Media registration sensor (A21Q1) Main PWB (A3) | BSD 8.1 | PL 8.2 PL 1.1A |
| E2-09 No RAP | **This is a Firmware problem** This is a firmware problem. Press power off (0) then power on (1). If problem persists, replace the firmware. | | | |
| E2-11 No RAP | **Registration sensor error** The media registration sensor was detected to be actuated when the machine powered up. | Media registration sensor (A21Q1) Main PWB (A3) | BSD 8.1 | PL 8.2 PL 1.1A |
| E4-01 No RAP | **Media exit sensor error**. The logic detected that the media exit sensor (Q3) was actuated at the wrong time. Indicating that the media trail edge is jammed in the area. | Media exit sensor (Q3) Main PWB (A3) Exit Drive Pulley, Belt, Drive Rolls and Idler Rolls Transport Drive Motor Driver PWB (A2) | BSD 10.3 BSD 8.1 | PL 8.4 PL 1.1A PL 8.1 |
| E4-02 No RAP | **Media exit sensor error** Lead edge of media did not reach the media exit switch in time. | Media exit sensor (Q3) Main PWB (A3) Fuser Drive Motor Heat Roll Transfer/Detack Corotron Fabric Guide | BSD 10.3 | PL 8.4 PL 1.1A PL 9.4 PL 10.1 |
| E4-03 No RAP | **Stripper finger jam switch error** The stripper finger jam switch was actuated during run. | Stripper finger jam switch (A23S1) Main PWB (A3) Stripper Finger Damaged | BSD 10.3 | PL 10.4 PL 1.1A |
| E4-04 No RAP | **Stacker Full** The Stacker Full Sensor was actuated during a run or was detected to be actuated when the machine powered up. | Stacker Full Sensor | | PL 14.1 |

**Table 1 Status Code Entry Chart**

| Status Code | Description | Components | BSD Ref | PL Ref |
|---|---|---|---|---|
| E4-09 No RAP | **This is a Firmware problem** Press power off (0) then power on (1). If problem persists, replace the firmware. | | | PL 1.1A |
| E4-11 No RAP | **Media exit sensor error** The media exit sensor was detected to be actuated when the machine powered up. This requires the media exit area to be opened, and the media to be removed. | Media exit sensor (A23S1) Main PWB (A3) | BSD 10.3 | PL 8.4 PL 1.1A |
| E4-12 No RAP | **Sheet feed sensor error** The sheet feed sensor was detected to be actuated when the machine powered up. This requires the media exit area to be opened, and to be removed. | Sheet feed sensor (A21Q2) 8825 with Tag/ MOD 90 Main PWB (A3) | BSD 8.1 | PL 8.4 PL 1.1A |
| E4-13 No RAP | **Stripper finger jam switch error** The stripper finger jam switch was actuated at power on. | Stripper finger jam switch (A23S1) Main PWB (A3) | BSD 10.3 | PL 10.4 PL 1.1A |
| E4-14 No RAP | **Media buckle sensor error** The media buckle sensor was detected to be actuated when the machine powered up. This requires the media exit area to be opened, and the media to be removed. | Media buckle sensor A21Q5) Main PWB (A3) Fabric Guide Position | BSD 4.1 | PL 8.4 PL 1.1A |
| E5-03 No RAP | **Top cover interlock switch error** The top cover was opened during print. | Top cover interlock switch (S26) Driver PWB (A2) | BSD 1.3 | PL 14.5 PL 1.1A |
| E5-04 No RAP | **Cutter cover interlock switch error** The cutter was opened during print. | Cutter cover interlock switch (S1) Driver PWB (A2) | BSD 1.3 | PL 7.6 PL 1.1A |
| E5-05 No RAP | **Feed shelf interlock switch error** The sheet feed shelf was opened during print. | Feed shelf interlock switch (S29) Driver PWB (A2) | BSD 1.2 | PL 14.3 PL 1.1A |
| E5-06 No RAP | **Front door interlock switch error** The front door was opened during print. | Front door interlock switch (S21) Driver PWB (A2) | BSD 1.3 | PL 14.3 PL 1.1A |

**Table 1 Status Code Entry Chart**

| Status Code | Description | Components | BSD Ref | PL Ref |
|---|---|---|---|---|
| E6-00 | **Front door interlock switch error**<br>The **C** button was pressed while a print was being made in the roll feed mode. An operator induced soft shutdown results in a complete print being made. The left side door must be opened and then closed. | Instruct the customer as to the appropriate time to press “C” | | |
| E6-01 | **Front door interlock switch error**<br>The Exit button was pressed while a print was being made in the roll feed mode. An operator-induced hard shutdown results in a partial print being made. The left side door must be opened and then closed. | Instruct the customer as to the appropriate time to press “Exit” | | |
| E7-01 | **Communication error**<br>The IOT is unable to communicate with the Controller. The IOT Off-Line and Media menus will still function, but cannot print from the Controller or network. | Go to E701 RAP in 8830 Controller Service Manual. | | |
| E7-02<br>No RAP | **Printer message display error**<br>A required message is not available in the language EPROM. Update the language EPROM. | Language EPROM | BSD 2.1 | |
| E9-XX | **Software shutdown**<br>This error is of unknown cause. Please contact Software engineering. | | | |
| Fx-xx | **Refer to the Folder Service Manual for all F-codes.** | | | |
| J1-01<br>No RAP | **Toner sensor error**<br>Out of toner. | Toner sensor (A22Q1)<br>Main PWB (A3) | BSD 9.7 | PL 9.9<br>PL 1.1A |

**Table 1 Status Code Entry Chart**

| Status Code | Description | Components | BSD Ref | PL Ref |
|---|---|---|---|---|
| J2-02<br>No RAP | **Cartridge home sensor error**<br>Toner cartridge could not find the home position. | Cartridge Home Sensor (A22Q2)<br>Main PWB (A3)<br>Cartridge Drive Motor<br>Cartridge Drive Gear | BSD 9.7 | PL 9.9<br>PL 1.1A<br>PL 9.10 |
| LL-00 | **Communication error**<br>Applies only to printers with a bit mapped user interface (FX). | | | |
| LL-02 | **Check sum test error**<br>Both message ROMs have failed the checksum test immediately after power up. | | | |
| LL-05<br>No RAP | **Fuser oil web error**<br>NVM count of web encoder pulses indicates the fuser oil web has reached end of life. | Web oiler motor (A23MOT1)<br>Driver PWB (A2)<br>CONTROL EPROMS | BSD 10.2 | PL 1.1A<br>PL 9.6 |
| LL-06<br>No RAP | **Fuser oil web error**<br>No encoder pulses are being received from the fuser oil web. | Web oiler optical switch (A23S2)<br>Web oiler motor (A23MOT1)<br>Driver PWB (A2) | BSD 10.2 | PL 1.1A<br>PL 9.6 |
| LL-07<br>No RAP | **Fuser oil web error**<br>Web Oiler Assembly connector not connected. | P/J 4, wiring harness, pins<br>Driver PWB (A2)<br>***NOTE: TAG 3 must be installed for this code. If not, disable the fault detection using [10-35*** | BSD 10.2 | PL 10.4<br>PL 1.1A |
| LL-10<br>No RAP | **Module wrap-around error**<br>The paper transport assembly or the Xerographic module is disconnected. | Xerographic module (A23)<br>Paper transport assembly (A21)<br>Driver PWB (A2) | BSD 7.5 | PL 1.1A |
| LL-11<br>No RAP | **Communications error**<br>Failed communications between the Driver PWB (A2) and the Main PWB (A3). | Driver PWB (A2) (fuser drive circuit)<br>Driver PWB (A2) (drum drive circuit)<br>Main PWB (A3)<br>CAUTION: Fuser must be up to temperature before running motors. | BSD 4.1<br>BSD 4.3 | PL 1.1A |

**Table 1 Status Code Entry Chart**

| Status Code | Description | Components | BSD Ref | PL Ref |
|---|---|---|---|---|
| LL-12 No RAP | **Photoreceptor motor stall fault** | Drum drive motor (A20MOT3)<br>Driver PWB (A2)<br>ADJ 8.4 Media Transport | BSD 4.3 | PL 1.1A<br>PL 9.1 |
| LL-21 No RAP | **HVPS Charge error**<br>The charge scorotron fault signal was active for 1.5 seconds. | Xerographic HVPS (A25)<br>Driver PWB (A2)<br>Scorotron | BSD 9.1 | PL 1.3<br>PL 1.1A |
| LL-22 No RAP | **Transfer / Detack HVPS Charge error**<br>The transfer / detack corotron fault signal was active for 1.5 seconds. | Xerographic HVPS (A25)<br>Driver PWB (A2)<br>Transfer/Detack Corotron | BSD 9.8 | PL 1.3<br>PL 1.1A |
| LL-30 No RAP | **Cutter error**<br>The cutter did not leave or reach the home sensor. Turn power off, then on. | Cutter home sensor (A8Q1)<br>Driver PWB (A2)<br>Cutter Drive Motor | BSD 7.5 | PL 1.1A<br>PL 7.8 |
| LL-41 | **Fuser error**<br>The fuser did not reach 110°F within one minute. | Fuser heat rod (HTR1)<br>Thermistor assembly (A23RT1)<br>Fuser power relay (K1)Triac (Q1)<br>AC Power module (A1)<br>Driver PWB (A2)<br>Main PWB (A3) | 10.1 | PL 10.2<br>PL 10.4<br>PL 1.1A |
| LL-42 Thermal Control RAP | **Fuser temperature error**<br>The fuser roll temperature is greater than the maximum allowable temperature for more than thirty seconds. Maximum temperature is currently 348° F (176° C). | Triac (Q1)<br>AC Power module (A1)<br>Driver PWB (A2) | 10.1 | PL 1.2A<br>PL 1.1A |
| LL-43 Fuser Over Temperature RAP | **Fuser temperature error**<br>Fuser temperature has exceeded the temperature limit. The FUSER OPEN (L) +26 VDC signal is low. | Triac (Q1)<br>AC Power module (A1)<br>Driver PWB (A2)<br>Thermal fuse (A23F1) | 10.1 | PL 1.1A<br>PL 1.2A<br>PL 10.4 |
| LL-44 Fuser Too Hot RAP | **Fuser temperature error**<br>Fuser temperature exceeded 420° F (215° C). The TEMPERATURE LIMIT signal exceeds it's limit. | Triac (Q1)<br>LVPS (A5)<br>Driver PWB (A2)<br>Main PWB (A3) | 10.1<br>1.2<br>10.1<br>10.1 | PL 10.4<br>PL 1.1A |

**Table 1 Status Code Entry Chart**

| Status Code | Description | Components | BSD Ref | PL Ref |
|---|---|---|---|---|
| LL-41 | **Fuser temperature error**<br>Fuser was in the warm up mode too long. | Fuser heat rod (HTR1)<br>Fuser power relay (K1)<br>Triac (Q1)<br>Ballast resistors (R1 & R2)<br>Fuser ballast power relay (K3)<br>Driver PWB (A2)<br>Main PWB (A3) | 10.1 | PL 10.2<br>PL 1.1A<br>PL 1.2A<br>PL 1.3 |
| LL-4F No RAP | **Fuser fault**<br>Fuser was expected to be warming but is was not. | Fuser power relay (1K1)<br>Fuser ballast power relay (A1K3)<br>Fuser Triac (A1Q1)<br>Fuser heater (A23HR1) | BSD 10.1 | PL 1.2A<br>PL 10.2 |
| LL-50 No RAP | **Power supply error**<br>26 VDC Bulk power supply failure. | LVPS (A5)<br>Driver PWB (A2)<br>Main PWB (A3) | BSD 1.2 | PL 1.1A<br>PL 1.3<br>PL 1.3 |
| LL-51 No RAP | **Power On Self Test fault**<br>The internal RAM failed POST. | Main PWB (A3) | | PL 1.1A |
| LL-52 No RAP | **Power On Self Test fault or Main PWB installed without** CONTROL EPROMS<br>The external RAM failed POST. | Install the Control EPROM<br>Main PWB (A3) | | PL 1.1A |
| LL-53 No RAP | **Power On Self Test fault**<br>IOT firmware checksum error. | Install the Control EPROM<br>Main PWB (A3) | | PL 1.1A |
| LL-54 No RAP | **Power On Self Test fault**<br>An unknown device failed POST. | Main PWB (A3) | | PL 1.1A |
| LL-55 No RAP | **Power On Self Test LVPS fault**<br>The +10 V FWR voltage was detected to be off when it should have been on. | LVPS | BSD 1.2 | PL 1.1A |
| LL-56 No RAP | **Power On Self Test ADC/DAC fault**<br>The ADC/DAC failed POST | Main PWB (A3)<br>Driver PWB (A2) | | PL 1.1A |
| LL-57 No RAP | **Power On Self Test SCC fault** | Main PWB (A3) | | PL 1.1A |

**Table 1 Status Code Entry Chart**

| Status Code | Description | Components | BSD Ref | PL Ref |
|---|---|---|---|---|
| LL-58 No RAP | **Power On Self Test** Extra "Return Value" from the Operating System. Reboot (Power off / Power On). | Install the Control EPROM Main PWB (A3) | | PL 1.1A |
| LL-60 No RAP | **Power On Self Test NVM Checksum fault** Record the existing NVM values. Run diagnostic [0360] to reset NVM to the default values. Manually restore the required NVM values. | | | |
| LL-61 No RAP | **Power On Self Test revision level fault** Power the printer up in diagnostics and run [0360] to reset NVM to default values. | | | |
| LL-89 No RAP | **This is a Firmware problem** This is a firmware problem. Press power off (0) then power on (1). If problem persists, replace the firmware. | | | PL 1.1A |
| LL-90 Overtoned Fault RAP | **Overtoned fault** Toner concentration of the developer material is too high. | Cartridge drive motor (A22MOT1) Cartridge home sensor (A22Q2) Toner sensor (A22Q1) Main PWB (A3) | 3.1 9.7 9.7 9.3 | PL 1.1A PL 9.9 |
| LL-91 Undertoned Fault RAP | **Undertoned fault** Toner concentration of the developer material is too low. | Cartridge drive motor (A22MOT1) Cartridge home sensor (A22Q2) Toner sensor (A22Q1) Main PWB (A3) | 9.7 | PL 9.9 PL 1.1A |
| U1-01 No RAP | **Media counter error** Print counter is disconnected. | Media counter Main PWB (A3) | BSD 3.1 | PL 1.3 PL 1.1A |

# Message Display Entry Chart

**Table 1 Message Display Entry Chart**

| MESSAGE DISPLAYED | CAUSE | CLEARANCE PROCEDURE | BSD Ref |
|---|---|---|---|
| PRINTER IS WARMING UP (Continuously displayed) | No fuser heat | - - - | BSD 10.1 |
| ADJUSTING THE PRINT QUALITY (Continuously displayed) | Toner dispense problem | - - - | BSD 9.3 |
| PLEASE CLOSE THE MEDIA DRAWER X (Refer to Note) | Drawer X read switch is open. | Refer to the display on the control panel and follow the clearance procedure. | BSD 7.1 |
| PLEASE CLOSE THE CUT SHEET FEED SHELF | Cut sheet feed shelf interlock switch (S29) is open. | Refer to the display on the control panel and follow the clearance procedure. | BSD 1.2 |
| PLEASE CLOSE THE FRONT DOOR | Front door interlock switch (S21) is open. | Refer to the display on the control panel and follow the clearance procedure. | BSD 1.2 |
| PLEASE CLOSE THE TOP DOOR | Top cover interlock switch (S26) is open. | Refer to the display on the control panel and follow the clearance procedure. | BSD 1.2 |
| PLEASE CLOSE THE CUTTER DRAWER | Cutter cover interlock switch (S1) is open. | Refer to the display on the control panel and follow the clearance procedure. | BSD 1.2 |
| NVM FAULT CALL FOR ASSISTANCE | Corrupted data in NVM. | Press power off (0) then power on (1). If problem persist run diagnostic program [0363] or [0360]. If problem persist replace the Control EPROMS. | |
| Re-feed Roll 1 | Re-feed roll 1 problem. | Re-feed the media. If necessary, press power off (0) then power on (1). | BSD 7.2 |
| Re-feed Roll 2 | Re-feed roll 2 problem. | Re-feed the media. If necessary, press power off (0) then power on (1). | BSD 7.3 |
| Re-feed Roll 3 | Re-feed roll 3 problem. | Re-feed the media. If necessary, press power off (0) then power on (1). | BSD 7.4 |
| Flashing 1, 2, 3, 4, 5, 6 or 7 | Copier failed power on self-test. | Press power off (0) then power on (1). If problem persists, go to svc.8830prt.2974. | |
| UNABLE TO CALIBRATE TONER SENSOR | The sensor did not calibrate when the code [0921-6] was entered. | Press power off (0), then power on (1). If problem persists, go to LL-91 Undertoned Fault RAP. | BSD 9.7 |
| TONER FAULT CALL FOR ASSISTANCE | Excessive toner sensed problem. | Press power off (0), then power on (1). If problem persists, go to LL-90 Overtoned Fault RAP. | BSD 9.7 |

**Table 1 Message Display Entry Chart**

| | | | |
|---|---|---|---|
| ALL ROLLS ARE EMPTY | Media Registration Sensor failed to sense media. | Go to C1-04. | |

***NOTE:*** *Substitute 1, 2, or 3 for X depending on which status code is displayed.*

# Maintenance Procedures

**Table 1 Image Module**

| INTERVAL | TASK | REASON | TASK ENABLER |
|---|---|---|---|
| Normal Call | Check, clean, or repair spacing wheels as required. | Contaminated, dirty or worn spacing wheels or drum ends cause print quality defects. | Clean or replace spacing wheels and the end surface that the wheels ride on. |
| Normal Call | Check and clean, if required, the scorotron. | Contaminated grid, bent or contaminated pins. Worn end blocks, are also causes for scorotron failure, which results in print quality defects. | **WARNING**<br>**The scorotron pin arrays are very sharp. Use care when handling the assembly.**<br>If contaminated, remove scorotron assembly and clean both sides of the grid with a brush. Examine pins and clean with brush Only if contaminated. Cleaning with a cloth can deposit lint that will cause print quality problems. |
| Normal Call | Clean the image bar. | Contamination causes print quality defects. | Clean the image bar with a lint free cloth and lens cleaner. |
| As Required | Repair or replace the scorotron/grid. | Contamination causes print quality defects. | **WARNING**<br>**The scorotron pin arrays are very sharp. Use care when handling the assembly.**<br>Replace the grid and/or pin array. Perform ADJ 9.2 Electrostatic Series. |

**Table 2 Xerographic Module**

| INTERVAL | TASK | REASON | TASK ENABLER |
|---|---|---|---|

**Table 2 Xerographic Module**

| | | | |
|---|---|---|---|
| Normal Call | Clean the xerographic module.<br>Clean the erase lamp.<br>Inspect the photoreceptor for damage.<br>Inspect components for vellum contamination.<br>Inspect all seals for damage.<br>Inspect the Cleaner Blade for damage. | Contamination can cause print quality problems.<br>Contaminants can travel to the LED bar and scorotrons, which results in print quality problems.<br>Fused toner on the bottom of the module can cause jams.<br>Contamination reduces the effectiveness of the lamp to discharge the photoreceptor drum.<br>Contaminants from vellum<br>- Cleaner failure<br>- Contaminants to prints.<br>Vellum contamination will contaminate and plug the cleaner auger at the ends. | Clean the toner from the housing and cleaner blade with a vacuum cleaner.<br>***NOTE:*** *Ensure that the vacuum cleaner does not contact the edge of the cleaner blade that touches the surface of the photoreceptor drum.*<br>Perform the Photoreceptor Cleaning Enhancement procedure in section 6.<br>Use cleaning solvent to remove any fused toner from the bottom of the module. Replace the photoreceptor if damaged.<br>Clean the erase lamp with a brush or dry lint free cloth.<br>Replace any damaged xerographic module seals. |
| Normal Call | Check and clean or replace the Stripper Fingers.<br>Clean the Media Guides. | Bent stripper fingers may cause feed out jams and heat roll damage.<br>Contaminated or damaged media guides can cause print quality defects. | Replace the damaged or contaminated stripper fingers. |
| Normal Call | Clean/check the Fuser Roll fabric guide. Replace the Fuser Roll. | Smooth or worn fuser roll loses ability to drive media.<br>Contaminated fabric guide causes too much resistance to media which results in jams/deletions/wrinkles. | Clean the roll with film remover.<br>Clean the fabric guide with formula A and film remover.<br>Perform diagnostic code 1033 every time the oiler is removed. |
| Normal Call | Check the fuser roll for lack of oil. | Too little oil can cause media handling and offsetting print quality problems. | Check remaining fuser web life [1034] and adjust the web oiler rate [1032].<br>If the fuser roll is dry, refer to BSD 10.2. |
| Normal Call | Inspect/clean the thermistor pad | Contamination can cause fuser heat problems. | Clean the thermistor pad with a brush or dry lint free cloth. |

**Table 2 Xerographic Module**

| | | | |
|---|---|---|---|
| As Required | Check/clean the photoreceptor. | Contamination/wear, scratches, or chips can generate print quality problems. | Inspect photoreceptor surface for deep scratches, chips or excessive wear. Replace photoreceptor if damaged.<br>Apply zinc stearate to the cleaning blade and photoreceptor drum. *Note 2<br>Clean photoreceptor surface with Xerox Film Remover if contaminated.<br>Apply zinc stearate when surface is dry. |
| As Required *Note 3 | Check/clean the cleaning blade. Replace with the new photoreceptor or as required. | Residual image, streaks, drum scuffing can occur if the blade is worn or contaminated. | Vacuum clean the cleaning blade. *Note 1<br>Apply zinc stearate to the cleaning blade and photoreceptor drum. *Note 2<br>Replace the blade if damaged. |
| 30K ft. 9Km | Replace the fabric guide. | Jams, deletions, wrinkles. | Refer to REP 8.9 |
| 30K ft. 9Km | Clean the inner xerographic module components. | If the customer is running a high percentage of vellum, outgassing of the vellum contaminates the cleaner auger and lower baffle surface resulting in poor cleaning and high dirt contamination.<br>plugged cleaner auger | Remove the fuser roll and photoreceptor to enable access.<br>NOTE: ***Use caution not to touch or damage cleaning blade or seals.***<br>Vacuum the Xero Mod and Auger and then clean all contaminated areas with Film Remover. |

***NOTE:*** *1. Ensure that the vacuum does not contact the edge of the cleaner blade that touches the surface of the photoreceptor drum.*

***NOTE:*** *2. Where possible, dust the drum and the cleaning blade with zinc stearate away from the xerographic module to prevent the charge scorotron from being contaminated. If the drum and cleaning blade must be dusted while in the xerographic module, remove the charge scorotron. The zinc stearate will contaminate the charge scorotron and cause print quality defects.*

***NOTE:*** *3. Install the complete cleaning blade kit when installing a new photoreceptor.*

**Table 3 Media Transport**

| INTERVAL | TASK | REASON | TASK ENABLER |
|---|---|---|---|
| Normal Call | Clean the lower paper transports, turnaround baffle, paper feed rolls. | Contaminates can cause the media to slip resulting in print quality defects. | Clean the transport with antistatic fluid and a lint free cloth.<br>Clean the feed roller with Formula A. |
| Normal Call | Clean the underside of the transport. | Reduce the airborne contaminants. | Vacuum clean, then wipe down with a lint free cloth. |

**Table 3 Media Transport**

| | | | |
|---|---|---|---|
| Normal Call | Clean the transfer corotron | Improve toner transfer to media.<br>Improve media tack. | Remove the transfer corotron. Clean loose toner/debris with a brush. Use only a water-dampened cloth to remove contaminants from the extrusion.<br>***NOTE:*** *Some of the coating may come off onto the cloth.* |
| Normal Call | Empty the condensation reclaim bottle. | Prevent the bottle from overflowing. | Empty the bottle into a sink. |
| 25K ft. 7Km | Repair or replace the transfer corotron. | Contamination causes print quality defects. | Clean (same as the step above). |

**Table 4 Media Feed**

| INTERVAL | TASK | REASON | TASK ENABLER |
|---|---|---|---|
| 1st 10K ft. or 3K m | Remove the drive chain slack. | Feeding problems. | Loosen the feed motor hardware to allow the spring to tension the chain. Tighten the hardware. |
| 40K ft. or 13K m | Remove the drive chain slack. | Feeding problems. | Loosen the feed motor hardware to allow the spring to tension the chain. Tighten the hardware. |

**Table 5 Developer Module**

| INTERVAL | TASK | REASON | TASK ENABLER |
|---|---|---|---|
| Normal Call | Brush the developer from the Developer Seal and lower edge of the Developer Housing back into the Developer Mag Roll and then clean the Seal. | Image quality problems can occur. | Clean as required. |
| Normal Call | Check that the developer housing is level. | If the developer is not level, density may not be uniform side to side. | Developer material should not be uniform from end to end. Check the level of the copier. |
| Normal Call | Check the canister for proper rotation. | If the canister is not rotating correctly, the copies will be light. | Check the dry ink dispense motor for binding. Check that the cartridge is locked in the drive hub. |
| Normal Call | Check the developer drives. | Worn gears will cause the housing to move up or down, which will cause print quality defects. | Check the gears for worn or broken teeth; replace the gears, if necessary. Ensure that the drive coupling is engaged. |

**Table 5 Developer Module**

| | | | |
|---|---|---|---|
| Normal Call | Check, clean, or replace the developer housing spacing wheels, as required. | Contaminated or worn spacing wheels will cause print quality defects. | Clean or replace spacing wheels. |
| 30K ft. 9Km | Check the trickle tube and toner Y tube for obstruction. | An obstructed Y tube or trickle tube will clog the cleaning/trickle system. | Clean as required. |
| 30K ft. 9Km | Check the pressure equalizing tubes. | Increased contamination due to poor air flow in the developer housing. | Remove developer housing. Remove and vacuum tubes, vacuum lower holes for toner. |

**Table 6 Covers**

| INTERVAL | TASK | REASON | TASK ENABLER |
|---|---|---|---|
| Normal Call | Clean the covers. | Customer satisfaction. | Formula A and antistatic fluid on the and cut sheet feed-in shelf. |

**Table 7 Cutter**

| INTERVAL | TASK | REASON | TASK ENABLER |
|---|---|---|---|
| Normal Call | Check the cam for lubrication. | To ensure the correct cutter operation. The cutter will not provide a straight cut. | Place a light film of lubrication on the cam surface. |
| Normal Call | Clean the cutter. | To ensure a straight, smooth cut on the lead edge of the media. | Vacuum the media dust and contamination from the cutter blade area. |

**Table 8 Media Drawers**

| INTERVAL | TASK | REASON | TASK ENABLER |
|---|---|---|---|
| Normal Call | Clean the media drawer. | Customer satisfaction. | Clean the media dust and contamination from each of the media drawers with a vacuum cleaner. |

**Table 9 Ozone Filter**

| INTERVAL | TASK | REASON | TASK ENABLER |
|---|---|---|---|
| Normal Call | Check and replace the Ozone Filter if necessary. | To ensure correct air flow through machine, and to keep heat that is generated to a minimum. | Check theOzone Filter at 40K prints, clean or replace as required. Replace the Ozone Filter at 120K prints. |

# Callback

## Procedure

1. Perform the Subsystem Checks for the subsystem that caused the problem.
2. Functional Checks:
   a. Perform the Initial Actions.
   b. Check the Recent Faults listing (see Section 6 - under System Information). If any of the faults described in that section are listed, take the recommended steps to clear the fault.
   c. Replace any part or supply that is past its life.
3. Perform the Final Action. Do Not perform the Maintenance Procedures.

# System Checkout / Final Action

## Procedure

Enter diagnostic mode and make three (3) prints of internal test pattern from the controller (if present). If a controller is not present, print [0955-5] from the IOT. **Prints are delivered to the exit tray.**

**Y N**

Go to the Initial Actions to begin your repair.

Evaluate the prints using Print Defects in Section 3. **The print quality is acceptable.**

**Y N**

Go to the Print Defects in Section 3 and go to the appropriate print quality RAP.

Perform the following:

1. Clean the exterior of the printer and provide print samples to the customer.
2. (Figure 1 ): Fill out the Service Call Report form including:

   Enter the Printer Menu, and scroll to Billing Meters. Enter Billing Meter and record Meter A and Meter B readings on the Service Call Report form.

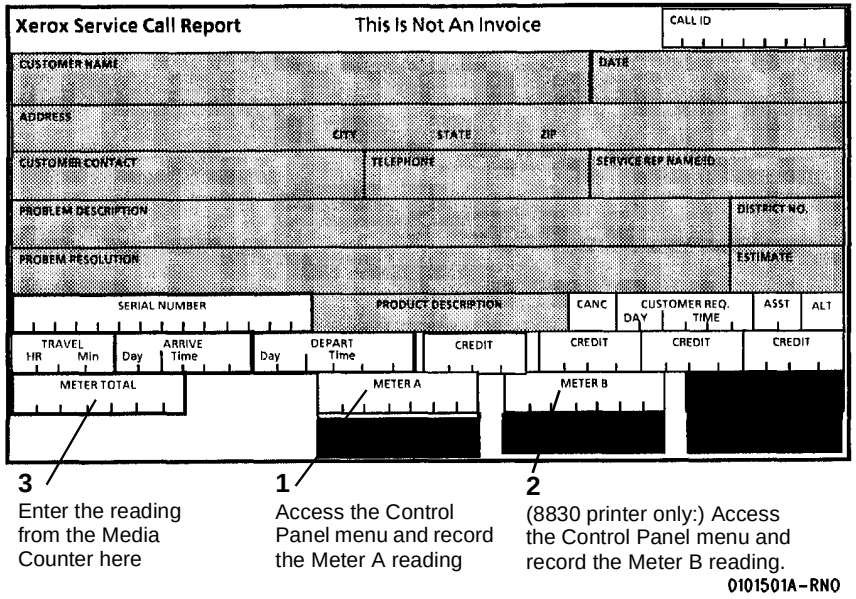


**Figure 1 Recording the Print Count Readings**

3. Record all activities in the Service Log.
4. Record the Print Count Readings on the Service Call Report.
5. Give appropriate credit to the Customer.

# 2 Status Indicator RAPs

**Repair Analysis Procedures**


C1-04/C2-04/C3-04 RAP ..... 2-3
C1-59/ C2-59/ C3-59 RAP ..... 2-4
LL-41/LL-45 Fuser Warm-up Fault RAP ..... 2-5
LL-42 Thermal Control RAP ..... 2-6
LL-43 Fuser Over Temperature RAP ..... 2-7
LL-44 Fuser Too Hot RAP ..... 2-8
LL-60/LL-61 NVM Fault RAP ..... 2-9
LL-90 Overtoned Fault RAP ..... 2-10
LL-91 Undertoned Fault RAP ..... 2-11


**Other Faults**


OF-1 Control Panel RAP ..... 2-15
OF-2 Power On Self Test (POST) RAP ..... 2-15
OF-3 Fuser Ballast RAP ..... 2-16


**Generic RAPs**


Generic Clutch RAP ..... 2-17
Generic Sensor RAP ..... 2-18
Generic Switch RAP ..... 2-19

# C1-04/C2-04/C3-04 RAP

***NOTE:*** *Roll x means Roll 1, 2, or 3.*

The Media Drive Motor (MOT1, BSD 7.1) was trying to feed the Roll x Media forward to the registration position but the Media Registration Sensor (A21Q1, BSD 8.1) failed to sense the media.

## Initial Actions

- Check the Media Roll (in the Drawer that was in use when the fault occurred).

**Table 1 Media Roll**

| | |
|---|---|
| Roll 1 | BSD 7.2 |
| Roll 2 | BSD 7.3 |
| Roll 3 | BSD 7.4 |

- Check that the Drive Chain, PL 7.2, is OK ( BSD 7.1).

## Procedure

Enter DIAGNOSTICS (General Procedures). Enter [0703] (ROLL FEED MOTOR FOR-WARD) and observe the Media Drive Motor. **The Media Drive Motor runs.**

**Y N**

Check that the Media Drawers are closed. Check the operation of the Drawer Interlock Switched as follows:

Enter [0713] for Drawer 1

Enter [0714] for Drawer 2

Enter [0715] for Drawer 3

**Each Drawer Interlock switch functions correctly.**

**Y N**

Go to BSD 7.1 and check the circuit of the Drawer Interlock Switch that does not function correctly. Check that the actuating magnet is not missing.

Go to BSD 7.1, NOTE 2, and check the resistances of the windings of the Media Drive Motor (MOT1) **The resistances of the windings of the Media Drive Motor (MOT1) are OK.**

**Y N**

Replace the Media Drive Motor (MOT1), PL 7.2.

Go to BSD 7.1, NOTE 1, and check the voltages at A7P1. **The voltages at A7P1 are OK.**

**Y N**

Check all wiring between A2P208 and A7P1. If the wiring is OK, replace the Driver PWB (A2), PL 1.1A

***NOTE: Drive Motor PWBs (A24), BSD 8.1, and (A7) are identical and can be exchanged with each other.***

Replace the Drive Motor PWB (A7), PL 7.2.

A

A

Go to BSD 8.1. Enter [0917 and then enter [1] on the keypad. Observe the Transport Drive Motor (A21MOT1). **The Transport Drive Motor (A21MOT1) runs.**

**Y N**

Go to BSD 8.1, NOTE 4, and check the resistances of the windings of the Transport Drive Motor (A21MOT1). **The resistances of the windings of the Transport Drive Motor (A21MOT1) are OK.**

**Y N**

Replace the Transport Drive Motor (A21MOT1), PL 8.1.

Go to BSD 8.1, NOTE 2, and check the voltages at A24P1. **The voltages at A24P1 are OK.**

**Y N**

Check all wiring between A2P210 and A24P1. If the wiring is OK, replace the Driver PWB (A2), PL 1.1A.

***NOTE:*** *Drive Motor PWBs (A24) and (A7), BSD 7.1, are identical and can be exchanged with each other.*

Replace the Drive Motor PWB (A24), PL 7.2.

Go to BSD 8.1. Enter [0803 and check the Media Registration Sensor. **The Media Registration Sensor is OK.**

**Y N**

Check the circuit of the Media Registration Sensor (A21Q1).

Check for mechanical binding or broken parts in the area of the Registration Drive Rolls and Pinch Rolls.

# C1-59/ C2-59/ C3-59 RAP

***NOTE:*** *C1, C2, C3 means Roll 1, 2, or 3.*

The Media Drive Motor (MOT1, BSD 7.1) was trying to feed the Roll x Media forward to the registration position but the Position Sensor (Q1, Q2, or Q3, BSD 7.2, 7.3, 7.4) sensed that the media jammed. The problem may be caused by light reflecting off of media, the media drawer, or baffles and returning to the media Position Sensor.

## Initial Actions

- Check that the Roll 1, 2, or 3 (the Drawer that was in use when the fault occurred) Position Sensor Q1, Q2, or Q3 is not blocked by a piece of media.
- Ensure that there are no strips or pieces of media in the area of the Position Sensor Q1, Q2, or Q3.

**Table 1 Media Roll**

| | |
|---|---|
| Roll 1 | BSD 7.2 |
| Roll 2 | BSD 7.3 |
| Roll 3 | BSD 7.4 |

## Procedure

Enter DIAGNOSTICS (General Procedures). Enter [0703] (ROLL FEED MOTOR FOR-WARD) and observe the Media Drive Motor. **The Media Drive Motor runs.**

**Y** **N**

Check that the Media Drawers are closed. Check the operation of the Drawer Interlock Switched as follows:

Enter [0713] for Drawer 1

Enter [0714] for Drawer 2

Enter [0715] for Drawer 3

Repair the Interlock Switch as required.

Check the rear of the appropriate Drawer and the baffles that are located around the opening of the Position Sensor for shinny or reflective surfaces. If these conditions exist correct the problem by painting the surface with flat black paint or use a black marker to cover the surface.

# LL-41/LL-45 Fuser Warm-up Fault RAP

***NOTE:*** *Go to BSD 10.1 while using this RAP.*

This RAP is used when the Fuser does not warm up when the control logic attempts to increase the heat.

LL-41 is displayed when the Fuser heat does not increase to 110º F (43º C) within one minute.

LL-45 is displayed when the Fuser temperature is greater than 110º F (43º C) but does not reach the setpoint temperature within the specified time period.

## Initial Actions

- Ensure that the following connectors are correctly seated:
  1. Thermistor Assembly RT1J5 / A23P5
  2. Thermal Fuse A23XF1
  3. Xerographic Module A23J2 / A23P2
  4. Fuser Heat Rod A23HR1P2 (blue wire)
  5. Fuser Heat Rod A23HR1P1 (brown wire)
- Ensure that the correct Fuser Heat Rod is installed.
- Check the wall outlet for correct line voltage.

**WARNING**

**Dangerous Voltage**

## Procedure

***NOTE:*** *After entering the code [1004], the Fuser Power Relay, A1K1, and the Fuser Power LED, (A2CR15 without Tag 25 or A2CR31 with Tag 25) on the Driver PWB, are energized for approximately five minutes.*

Enter DIAGNOSTICS (General Procedures). Enter [1004] to test the operation of the Fuser. **After 10 seconds, the Fuser Heat Rod is still on.**

**Y** **N**

Switch off the printer and disconnect the power cord. Measure the resistance of the Heat Rod as follows: Disconnect A23P1/A23J1. Connect the meter leads to A23J1-1 and A23J1-3. **The resistance is less than 30 Ohms.**

**Y** **N**

Check the wiring between A23J1 and the Fuser Heat Rod (HR1). **The wires have continuity**

**Y** **N**

Repair the wires

Replace the Fuser Heat Rod, HR1 ( PL 10.2)

A B

A B

Check for AC power from the Fuser Power Relay as follows: Reconnect A23P1/A23J1. Set the meter to read AC voltage and connect the meter leads to A1K1-4 and A1K1-8. Cheat the front door interlock. Connect the Power Cord and switch on the printer. Wait 10 seconds. **AC power is present.**

**Y** **N**

Set the meter to read 26 VDC and connect the (+) meter lead to A1K1-1 and the (-) meter lead to A1K1-0. Switch off, then switch on, the printer. **26 VDC is present.**

**Y** **N**

Check the ***Fuser Power Relay On*** signal from the Driver PWB, A2, as follows: Connect the (+) meter lead to A2J213-1 and the (-) meter lead to A2J213-3. **26 VDC is present.**

**Y** **N**

PL 1.1A Replace the Driver PWB, A2.

Check and repair the wiring between the Driver PWB, A1, and the Fuser Power Relay, A1K1.

Replace the Fuser Power Relay, A1K1, PL 1.2A.

Switch off the printer and disconnect the power cord. Check the following wires for continuity.

**Table 1**

| From | To | Color |
|---|---|---|
| A1K1-8 | A1Q1MT1-A | WHT |
| A1Q1MT2-A | A23P1-1 | BLU |
| A1K1-4 | A23P1-3 | BLK & BRN |

**The wires have continuity.**

**Y** **N**

Repair the wires

Set the meter to read +2 VDC. Connect the (+) lead to A1Q1-G (BRN wire) and the (-) lead to A1Q1-MT1 (WHT wires). Reconnect the Power Cord and switch on the printer. Wait 10 seconds. Set the voltage meter to Peak Hold. **The Peak Voltage exceeds 0.9 VDC.**

**Y** **N**

Connect the (+) meter lead to A2P213-11 and leave the (-) meter lead connected to A1Q1-MTI. **Pulses are present.**

**Y** **N**

Replace the Driver PWB, A2, PL 1.1A

**The machine has TAG 50 (50Hz only) installed.**

**Y** **N**

Repair the wire between terminal G and A1Q1 and A2P213-11 (wire no. 31)

A C D

A C D

Connect the (+) meter lead to A9P1-2 and leave the (-) meter lead connected to A1Q1-MTI. **Pulses are present.**

**Y N**

Repair the wires.

Check the wiring between the Heat Rod Control PWB (A9) and the Fuser Triac (Q1). If OK, replace the Heat Rod Control PWB.

Switch off the printer and disconnect the power cord. Replace the Fuser Triac, A1Q1, PL 1.2A. Then go to OF-3 Fuser Ballast RAP to check that the ballast circuit is operating correctly.

**The Thermistor Pad on the Thermistor Pad Assembly touches the Fuser Roll.**

**Y N**

Replace the Thermistor Pad Assembly, PL 10.4.

**The Thermistor Pad is free of contamination.**

**Y N**

Clean the Thermistor Pad with a clean cloth.

Check the wires between the Fuser Thermistor, RT1, and the Main PWB, A1, for continuity. **The wires have continuity.**

**Y N**

Repair the wires.

Replace the Thermistor Pad Assembly, PL 10.4.

# LL-42 Thermal Control RAP

***NOTE:*** *Go to BSD 10.1 while using this RAP.*

This RAP is used to locate certain problems in the thermal control circuitry in the Fuser area.

**WARNING**

**Dangerous Voltage**

## Initial Actions

Switch off, then switch on the printer. If the problem still exists, perform the procedure below.

## Procedure

Switch off the printer and disconnect the Power Cord. Disconnect the orange wire from the Fuser Triac, A1Q1-G. Reconnect the Power Cord and switch on the printer. Wait 10 seconds. **After 5 seconds, the Fuser Heat Rod is off.**

**Y N**

Replace the Fuser Triac, ATQ1, PL 1.2A. Switch off the printer. Disconnect A23P5 from the Thermistor Pad Assembly J5. Set the meter to read 100ohms. Connect the (+) meter lead to J5-1. Connect the (-) meter lead to J5-2.

**The resistance is greater than 100 ohms.**

**Y N**

Replace the Thermistor Pad Assembly, PL 10.4.

Check the wiring between Fuser Thermistor, RT1, and the Main PWB, A2. **The wires have continuity.**

**Y N**

Repair the wires.

Replace the Main PWB, A2, PL 1.1A.

# LL-43 Fuser Over Temperature RAP

***NOTE:*** *Refer to BSD 10.1 while using this RAP.*

**WARNING**

**Dangerous Voltage**

LL-43 is displayed when the logic detects that there is a problem with the Fuser temperature and an overtemperature condition has caused the Thermal Fuse, A23F1, to open.

## Initial Actions

- Ensure that the following connectors are correctly seated:
  1. Driver PWB A2J213 / A2P213
  2. Driver PWB A2J201 / A2P201
  3. Xerographics Module A23J2 / A23P2
  4. Thermistor Pad Assembly J5 / A23P5
- Ensure that both cooling fans are working. If not, go to BSD 1.3 to repair the cooling fans circuit.
- Ensure that all interlocks are closed.

## Procedure

Connect the (+) meter lead to the Driver PWB A2P201-1 and the (-) meter lead to ground. **There is +26 VDC present.**

**Y N**

Check continuity through the Overtemperature Fuse, A23F1, as follows:

1. Disconnect the BLU and GRY wires from the fuse.
2. Set the meter to measure continuity.
3. Connect the meter across the fuse terminals.

**The fuse has continuity**

**Y N**

Switch off the printer and disconnect the Power Cord. Replace the Thermal Fuse, A23F1, PL 10.4.

Perform the following steps to determine the cause for the fuse to open:

1. Disconnect the BLU and WHT wires from the Fuser Triac, A1Q1.
2. Set the meter to measure 2K ohms. Measure the resistance across the Fuser Triac connections from which the wires were removed. If the resistance is not infinite, replace the Fuser Triac, A1Q1, PL 1.2A.
3. Measure the resistance from each of the Fuser Triac connections from which the wires were removed to ground. If the resistance is not infinite, replace the Fuser Triac, A23Q1, PL 1.2A.

**Y N**

Connect the (+) meter lead to the Driver PWB, A2P201-3 and the (-) meter lead to ground. **There is +26 VDC present.**

**Y N**

Replace the Driver PWB, A2, PL 1.1A.

**A B**

**A B**

Check the BLU and GRY wires between the Thermal Fuse. A23F1, and the Driver PWB, A2 for continuity. **The wires have continuity.**

**Y N**

Repair the wires.

Disconnect A23P5 from the Thermistor Pad Assembly JS. Set the meter to measure 200K ohms. Connect the (+) meter lead to the Thermistor Pad Assembly J5-1 and the (-) meter lead to J5-2. **The resistance is less that 200K ohms.**

**Y N**

Replace the Thermistor Pad Assembly PL 10.4.

Check the YEL and GRN wires between the Fuser Thermistor and the Main PWB, A1 for continuity. **The wires have continuity.**

**Y N**

Repair the wires.

Replace the Driver PWB, A2, PL 1.1A. If the problem persists, replace the Main PWB A1, PL 1.1A.

Connect the (+) meter lead to the Driver PWB, A2P213-3 and the (-) meter lead to ground. Enter Diagnostic code [1009] to turn on the Fuser Power Relay, A1K1. **The voltage changes from +26 VDC to less than 1 VDC when the Fuser Power Relay is turned on.**

**Y N**

Check the BRN and ORN wires between the Fuser Power Relay, A1K1, and the Driver PWB, A2 for continuity. **The wires have continuity.**

**Y N**

Repair the wires.

Replace the Driver PWB, A2, PL 1.1A. If the problem persists, replace the Main PWB, A1 PL 1.1A.

Replace the Fuser Power Relay, A1K1, PL 1.2A.

# LL-44 Fuser Too Hot RAP

***NOTE:*** *Refer to BSD 10.1 while using this RAP.*

**WARNING**

**Dangerous Voltage**

LL-44 is displayed when the Fuser temperature exceeds 420º F (216º C), the maximum allowed temperature.

The status code may also be displayed if the Temperature Limit Thermistor, A23RT2, has a malfunction or is contaminated.

## Initial Actions

Switch off the printer and allow the fuser to cool. Switch on the printer. If the problem still exists, perform the following procedure.

## Procedure

Check the Fuser Triac, A1Q1, as follows:

1. Switch off the printer and disconnect the Power Cord.
2. Disconnect the BLU and WHT wires from the Fuser Triac, A1Q1
3. Set the meter to measure 2K ohms.
4. Measure the resistance across the Fuser Triac connections from which the wires were removed.

**The resistance is infinite.**

**Y** **N**

Replace the Fuser Triac, A1Q1, PL 1.2A.

Measure the resistance from each of the Fuser Triac connections from which the wires were removed from the ground. **The resistance is infinite.**

**Y** **N**

Replace the Fuser Triac, A1Q1, PL 1.2A.

Disconnect A2P201 from the Driver PWB A2J201. Set the meter to measure 5 VDC. Connect the (+) meter lead to the Driver PWB A2J2-9 and the (-) meter lead to A2J2-10. **There is +5 VDC present.**

**Y** **N**

Replace the Driver PWB, A2, PL 1.1A.

Check the YEL and GRN wires between the Temperature Limit Thermistor and the Driver PWB, A2, for continuity and for a short to ground. **The wires are OK.**

**Y** **N**

Repair the wires.

Replace the Thermistor Pad Assembly, PL 10.4.

# LL-60/LL-61 NVM Fault RAP

This RAP is used for NVM (Non-Volatile Memory) problems that are indicated by a status code or a message display. The control panel displays the message NVM Fault Call For Assistance. LL-60 or LL-61 may also be displayed. The problem may be caused when the NVM data are corrupted or partially corrupted. The contents of the NVM do not agree with the checksum, or the contents of the NVM do not agree with the shadow contents.

LL-60 - This status code indicates corrupted data in NVM. Perform steps 1 through 4 of the procedure.

LL-61 - This status code is an indication that an older version of firmware has been installed. Ensure that the newest version of firmware is installed. If the problem persists, perform steps 1 through 4 of the procedure.

## Procedure

The purpose of this procedure is to restore the printer to normal operation condition. Go to To Enter The Diagnostic Mode located in Section 6 when performing this procedure.

1. Enter the following diagnostic codes and record the corresponding data values displayed on the control panel:

**Table 1**

| | |
|---|---|
| [02-61] | Country Configuration |
| [0360-2] | Electronic Billing Meters value |
| [0760] | Delay Between Film Prints |
| [0860] | Lead Edge Registration value |
| [0862] | Cut length value |
| [0903] | Image Module Output Light Value |
| [0921-2] | Vhigh |
| [0921-3] | Illumination (Exposure) value |
| [1034] | Remaining Oiler Web Life |
| [1060] | Fuser Temperature |
| [1062] | Fuser Temperature |
| [1063] | Fuser Temperature |

2. Enter [0360-1] for NACO printers or [0360-3] for EO printers to reset the contents of the NVM to the factory default values.
3. Enter [0921-6] and then compare the values recorded in step 1 to previously recorded values for this printer. Enter the codes listed in step 1 and change the default values as required.

***NOTE:*** *If any value recorded in step 1 appears to be incorrect, use the previously recorded value. If there is no previously recorded value, retain the default value.*

4. Check/adjust the following:

**Table 2**

| | |
|---|---|
| ADJ 8.1 | Vertical Magnification |
| ADJ 8.2 | Lead Edge Registration |
| ADJ 8.3 | Cut Length |
| ADJ 9.2 | Electrostatic Series |
| ADJ 10.1 | Fuser Temperature |

***NOTE:*** *If the values entered are not retained, replace the NVM (PL 1.1A) and perform steps 2-4 again.*

# LL-90 Overtoned Fault RAP

***NOTE:*** *Go to BSD 9.7 while using this RAP.*

The status code LL-90 is displayed when the logic detects that the toner concentration is significantly greater than the Control Point value.

The Toner Control System is designed to maintain the Toner Concentration within an acceptable operating range. The Control Point operating range is from 5.2 VDC to 6.0 VDC. The Toner Sensor continuously senses the Toner Concentration. A change in the Toner Concentration results in a corresponding change of the Sensor signal. As the toner concentration increases, the Toner Sensor signal voltage decreases. The logic monitors the Sensor signal.

LL-90 indicates that the logic detected that the toner concentration increased greater than the allowable limit.

The problem may occur if there is a problem with the toner dispensing or the developer mixing systems.

## Initial Actions

- Clean the Pressure Equalizing Tubes with a vacuum cleaner in order to remove toner from inside the tubes. Clean the Augers and Magnetic Roll
- Examine the Developer Housing and check for a large amount of toner in the area of the Toner Dispenser.
- Ensure that the printer is level.
- Ensure that the Toner Cartridge is not damaged and that the seal is secured to the Cartridge in the correct location.
- Check that all the connectors between the Toner Sensor, A22Q1, and the Main PWB, A2, are seated correctly.
- (Figure 1): Ensure that the Developer Housing Auger and Drive Gears are not damaged and are installed correctly.

1 Ensure that the Rear Auger Drive Gear is positioned with the flange as shown.

2 Ensure that the Developer Housing Drive Gear is positioned with the flange as shown.

3 Ensure that the Front Auger Drive Gear is captured in position by the Rear Auger Drive Gear Flange and the Developer Housing Drive Gear flange.

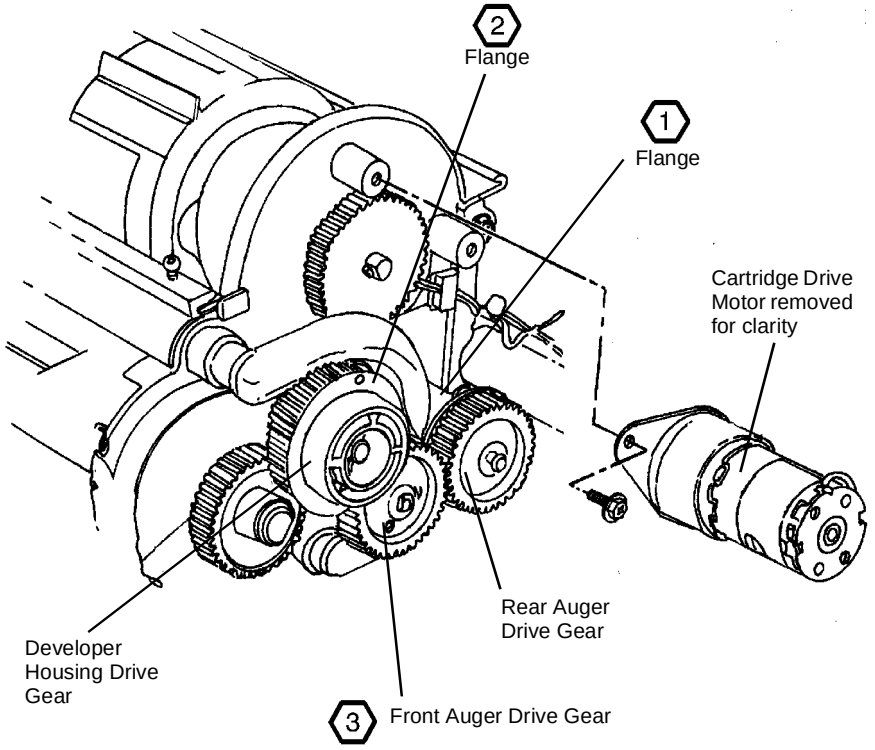


**Figure 1 Developer Housing and Auger Drive Gears**

## Procedure

With the printer in an LL-90 fault condition, enter diagnostic code [9-22] and then press YES, in order to enable the printer to function with an LL-90 fault condition. Enter the code [0361] in order to exit the diagnostics mode. Run 3 test prints [9-55 Pattern 5]. **The LL-90 code is displayed as the print is being made.**

**Y N**

Complete the service call.

Use the last print to check the image density. **The image density of the 1.0 Solid Square in the center of the Test Pattern [0955-5] is equal to or less than the 1.20 Density Square on the Output Reference SIR 495.1.**

**Y N**

Perform the Tone-Down Procedure [09-06. If the printer does not tone-down, perform the Image Density Adjustment. Go to ADJ 9.3.

Enter the code [9-21-4] in order to switch on the Main Drive Motor and the Toner Sensor circuit. Connect the (+) meter lead to the Toner Sensor A22Q1P1-2 and the (-) meter lead to A22Q1P1-4. **There is +15 VDC present.**

**Y N**

heck for an open or short circuit to ground in the wires connected to A22Q1P1-2 and A22Q1P1-4. If the wires are ok, replace the Main PWB, A3, PL 1.1A.

Connect the (+) meter lead to the Main PWB A3J303-4 and the (-) meter lead to ground. **There is +5.2 to +6.0 VDC is present.**

**Y N**

Connect the (+) meter lead to the Toner Sensor A22Q1-1 and the (-) meter lead to ground. **There is greater than +0.2 VDC present.**

**Y N**

Disconnect Toner Sensor A22Q1P1 from A22Q1J1. Connect the (+) meter lead to the Main PWB A3J303-16 and the (-) meter lead to ground. **There is greater than +0.2 VDC present.**

**Y N**

Replace the LVPS, A5, PL 1.1APL 1.1A. If the problem persists, replace the Main PWB, A3,

Check for an open or short circuit to ground in the wires connected to A22Q1-2 and A22Q1-4. If the wires are OK, replace the Toner Sensor A22Q1, PL 9.9. Run [9-21-6 Toner Sensor Calibration.

Check for an open or short circuit to ground in the wire connected to A22Q1P1-3. If the wire is OK, replace the Toner Sensor A22Q1, PL 9.9. Run [9-21-6 Toner Sensor Calibration.

Replace the Main PWB, A3, PL 1.1A.

# LL-91 Undertoned Fault RAP

***NOTE:*** *Go to BSD 9.7 while using this RAP.*

The status code LL-91 is displayed when the logic detects that the toner concentration is significantly less than the Control Point value.

The Toner Control System is designed to maintain the Toner Concentration within an acceptable operating range. The Control Point operating range is from 5.2 to 6.0 VDC. The Toner Sensor continuously senses the Toner Concentration. A change in the Toner Concentration results in a corresponding change of the Sensor signal. As the Toner Concentration decreases, the Toner Sensor signal voltage increases. The logic monitors the Toner Sensor signal.

LL-91 indicates that the logic detected that the toner concentration decreased greater than the allowable limit.

The problem may occur if there is a problem with the toner dispensing or the developer mixing systems.

## Initial Actions

- Examine the Toner Cartridge to ensure that the Cartridge is not empty and is installed correctly.
- Check the Cartridge for damage and ensure that the seal is secured to the Cartridge in the correct location.
- (Figure 1 ) Ensure that the Developer Drive Coupling is in good condition and is engaged fully.
- (Figure 2) Ensure that the Developer Housing Auger and Drive Gears are not damaged and are installed correctly.
- Check that all the connectors between the Toner Sensor, A22Q1, and the Main PWB, A2, are seated correctly.

## Procedure

With the printer in an LL-91 fault condition, enter diagnostic code [9-22] and press Yes, in order to enable the printer to function with an LL-91 fault condition. Enter the code [0361] in order to exit the diagnostics mode.

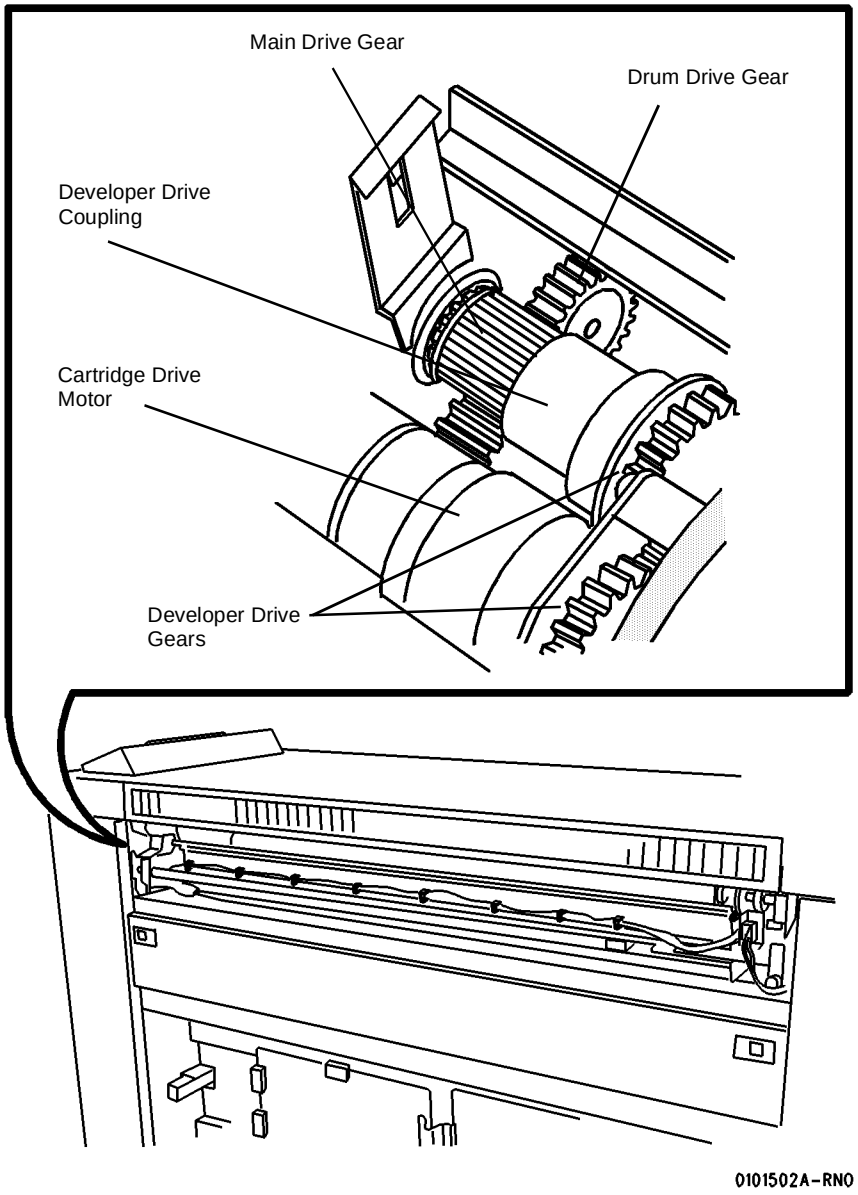


**Figure 1 Location of Developer Drive Coupling**

**The Developer Housing Auger and Drive Gears are rotating as the prints are being made.**

**Y N**

Go to BSD 4.3, Drum Drive, to repair the drive circuit.

**The LL-91 code is displayed as the prints are being made.**

**Y N**

Complete the Service Call.

Use the last print to check the image density. **The image density of the 1.0 Solid Square in the center of the Test Pattern [0955-5] is equal to or less than the 1.20 Density Square on the Output Reference SIR 495.1.**

**Y N**

Perform the Tone-Up procedure [09-06. If the printer does not tone up, perform the Image Density Adjustment. Go to ADJ 9.3

***NOTE: : If unable to perform ADJ 9.3, replace the Developer and repeat ADJ 9.3.***

Enter the code [9-21-4]in order to switch on the Main Drive Motor and the Toner Sensor circuit. Connect the (+) meter lead to the Main PWB A3J303-14 and the (-) meter lead to A3J303-13. **There is between +5.2 and +6.0 VDC present.**

**Y N**

Connect the (+) meter lead to the Toner Sensor A22Q1P1-1 and the (-) meter lead to ground. **There is less than +10 VDC present.**

**Y N**

Disconnect Toner Sensor A22Q1P1 from A22Q1J1. Connect the (+) meter lead to the Main PWB A3J303-16 and the (-) meter lead to ground. **There is less than +10.0 VDC present.**

**Y N**

Replace the LVPS, A5, PL 1.1A. If the problem persists, replace the Main PWB, A3, PL 1.1A.

Check for an open or short circuit to ground in the wires connected to A22Q1P1-3 (BRN) and A22Q1P1-4 (YEL). If the wires are OK, replace the Toner Sensor, A22Q1, PL 9.9. Then run [9-21-6] Toner Sensor Calibration.

Check for an open or short circuit to ground in the wire connected to the A22Q1P1-3 (ORN). If the wire is OK, replace the Toner Sensor Calibration.

Replace the Main PWB, A3, PL 1.1A. If the problem persists, enter the code [0926 to reset the NVM.

1. Ensure that the Rear Auger Drive Gear is positioned with the flange as shown.

2. Ensure that the Developer Housing Drive Gear is positioned with the flange as shown.

3. Ensure that the Front Auger Drive Gear is captured in position by the Rear Auger Drive Gear Flange and the Developer Housing Drive Gear flange.

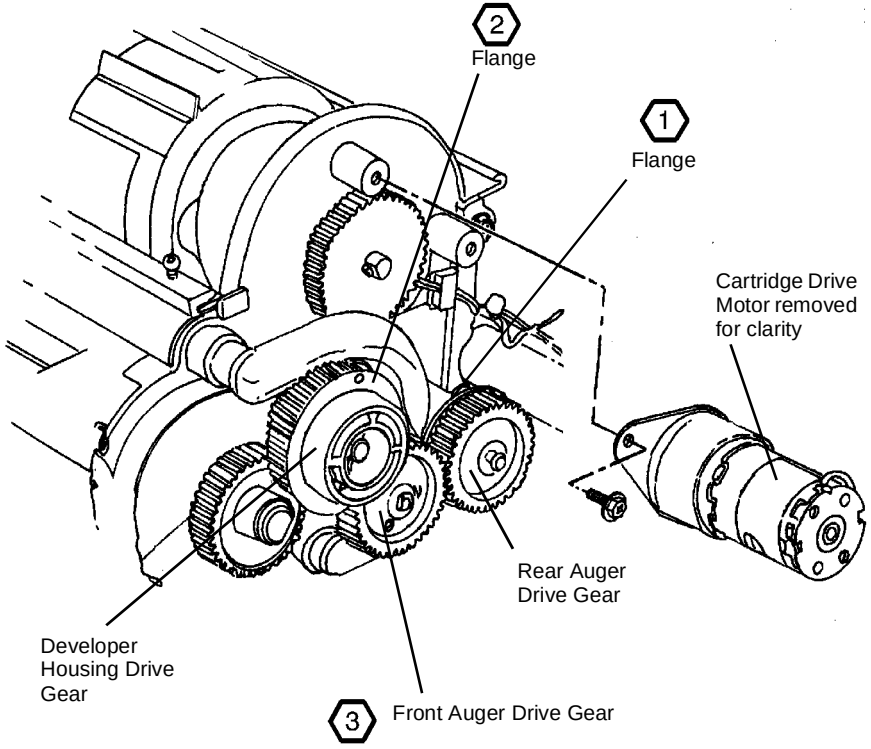


**Figure 2 Developer Housing and Auger Drive Gears**

# OF-1 Control Panel RAP

***NOTE:*** *Go to BSD 2.1 while using this RAP, unless otherwise directed.*

This RAP is used when the Control Panel does not operate, or when the Control Panel operates incorrectly.

## Initial Actions

- Make sure that AC power is applied to the machine.
- Ensure that the 26-conductor ribbon cable, connected between the Main PWB A3J301 and the User Interface PWB A32J1 (located in the Control Panel), is seated fully at each connector.

## Procedure

**Table 1 Control Panel Probable Cause / Corrective Action**

| Control Panel | Probable Cause | Corrective Action |
|---|---|---|
| The Message Display is blank, no characters are displayed. | There is no +5 VDC to the Main PWB, A3.<br>There is an open circuit in the ribbon cable between the Main PWB A3J301 and the User Interface PWB A32J1.<br>There is an internal fault in the Control Panel or in the Main PWB A3. | Go to BSD 1.2 to troubleshoot the +5 VDC power to the Main PWB, A3.<br>Check for continuity in all wires in the ribbon cable.<br>Replace the Control Panel, PL 1.4.<br>If the problem persists, replace the Main PWB, A3, PL 1.1A. |
| The Message Display LEDs are on but no characters are displayed. | There is no +15 VDC to the Main PWB, A3.<br>There is no +5 VDC (Bulk) to the Main PWB, A3. | Go to BSD 1.2 to troubleshoot the +15 VDC power to the Main PWB, A3.<br>Go to BSD 1.2 to troubleshoot the +5 VDC (Bulk) power to the Main PWB, A3. |
| The Message Display LEDs are on but no characters, random characters, or black squares appear. | There is an open circuit in the ribbon cable between the Main PWB A3J301 and the User Interface PWB A32J1.<br>There is an internal fault in the Control Panel or in the Main PWB A3. | Check for continuity in all wires in the ribbon cable.<br>Replace the Control Panel, PL 1.4.<br>If the problem persists, replace the Main PWB, A3, PL 1.1A. |

# OF-2 Power On Self Test (POST) RAP

***NOTE:*** *Go to BSD 1.2 and BSD 2.1 while using this RAP.*

This RAP is used when the logic detects a fault during the Power On Self-test (POST). The printer does not initialize and the Control Panel displays a **1**, **2**, **3**, **4**, **5**, **6**, or **7**.

## Initial Actions

- Ensure that the EPROMs and the NVM are seated fully on the Main PWB, A3.
- Ensure that the 40-conductor ribbon cable, connected between the Driver PWB A2J206 and the Main PWB A3J313, is seated fully at each connector.
- Ensure that the power cable, connected between the Driver PWB A2J207 and the Main PWB A3J312 is seated fully at each connector.
- Ensure that the 26-conductor ribbon cable, connected between the Main PWB A3J301 and the Control Panel User Interface PWB A32J1, is seated fully at each connector.

## Procedure

**Table 1 Power On Self Test (POST) Probable Cause / Corrective Action**

| The number that is Displayed on the Control Panel. | Probable Cause | Corrective Action |
|---|---|---|
| **1 or 2** | There is a fault in the RAM memory. | Replace the Main PWB, A3, PL 1.1A. |
| **3** | The contents of the Control EPROMs does not agree with the checksum.<br>The Main PWB is defective. | Replace both Control EPROMs on the Main PWB, A3.<br>Replace the Main PWB, A3, PL 1.1A. |
| **4** | There is a fault tn the Analog-to-Digital Converter or the Digital-to-Analog Converter. | Replace the Main PWB, A3, PL 1.1A. |
| **5** | There is a fault in the Main PWB, A3. | Replace the Main PWB, A3, PL 1.1A. |
| **6** | There is a fault in the Digital-to-Analog Converter . | Replace the Driver PWB, A2, PL 1.1A.<br>If the problem persists, replace the Main PWB, A3, PL 1.1A. |
| **7** | There is a fault in the printer port output circuitry. | Replace the Main PWB, A3, PL 1.1A. |

# OF-3 Fuser Ballast RAP

## Procedure

**The customers lights flicker when the Machine is switched on.**

**Y** **N**

The fuser ballast is operating properly.

**The machine has TAG 50 (50Hz only) installed.**

**Y** **N**

Switch off the printer and disconnect the power cord. Perform the following steps to check that the ballast resistor circuit is operating correctly:

1. Disconnect the BRN wire from A1Q1-G.
2. Set the meter to read 60 VAC (USO) or 120 VAC (XR).
3. Connect the (+) meter lead to A1Q1-MT2 (BLU wires).
4. Connect the (-) meter lead to A1Q1-MT1 (WHT wires).
5. Connect the Power Cord and switch on the printer.

**At least 60 VAC (USO) or 120 VAC (RX) is present.**

**Y** **N**

Switch off the printer and disconnect the power cord. Set the meter to read 8 to 21 ohms of resistance. Disconnect the wires on each Ballast Resistor, A1R1 and A1R2R2, before measuring the resistance. **The resistance of each Ballast Resistor, A1R1 and A1R2, is 7 to 9 ohms (USO) or 19 to 21 ohms (RX)**

**Y** **N**

Replace both Ballast Resistors, A1R1 and A1R2, PL 1.2A.

Check the following Ballast Resistor wires for continuity;

**Table 1 Ballast Resistor Wires**

| From | To | Color |
|---|---|---|
| A1R1-1 | A1K3-8 | RED |
| A1R1-2A | A1Q1-B | BLU |
| A1R2-1 | A1K3-4 | RED |
| A1R2-2A | A1R1-2B | BLU |

**The wires have continuity.**

**Y** **N**

Repair the wires.

Set the meter to read +26 VDC. Connect the (+) meter lead to the Fuser Ballast Power Relay. A1K3-1. Connect the (-) meter lead to A1K3-0. Reconnect the Power Cord and switch on the printer. **There is +26 VDC present for approximately 5 seconds.**

**Y** **N**

Connect the (+) meter lead to A2P213-6. Connect the (-) meter lead to A2P213-7. Reconnect the Power Cord and switch on the printer. **There is +26 VDC present for approximately 5 seconds.**

**Y** **N**

Replace the Driver PWB, A2, PL 1.1A.

**A** **B** **C** **D**

Repair the wires.

Replace the Ballast Relay, A1K3, PL 1.2A.

**A** **B**

Replace the Heat Rod Control PWB PL 1.2A.

# Generic Clutch RAP

## Initial Actions

***NOTE:*** *This procedure can be used to check any clutch. Due to the generic format of this RAP there will be no specific ADJ, PL or Diagnostic codes identified.*

## Procedure

( Figure 1): Enter DIAGNOSTICS (General Procedures). Enter code [xxxx to test the Clutch (Refer to appropriate BSD for the specific code). Actuate the Clutch. **The Clutch energizes.**

**Y N**

Deactuate the clutch. **There is +26 VDC at J209-12 (use the actual connector/pin number on the BSD) on the Driver PWB (A2).**

**Y N**

Check the wire for an open circuit. If the wires are good, replace the Clutch (PL X.X).

Actuate the Clutch. **The voltage decreased to approximately 0 VDC.**

**Y N**

Replace the Main PWB (PL X.X).

Check the adjustment of the Clutch (ADJ X.X). If the adjustment is good, replace the Clutch (PL X.X).

The Clutch and its circuit appear to be operating normally. Check the adjustment or alignment of the Clutch.

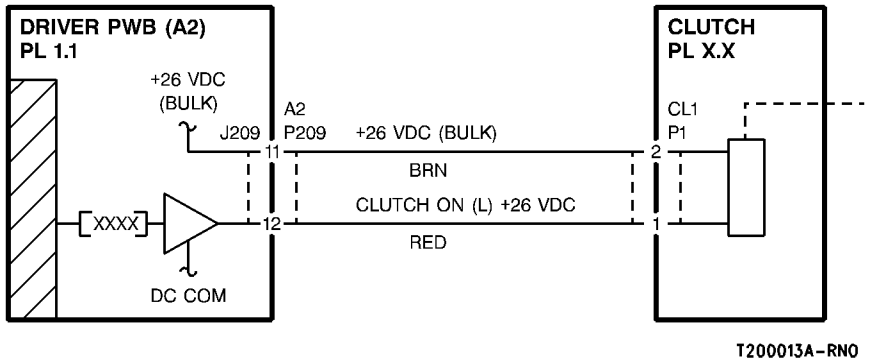


**Figure 1 Clutch (Generic)**

## Initial Actions

***NOTE:*** *This procedure can be used to check any sensor. Due to the generic format of this RAP there will be no specific ADJ, PL or Diagnostic codes identified.*

- Ensure that the Sensor is not blocked.
- Clean the Sensor surfaces before using this procedure.

## Procedure

( Figure 1): Enter DIAGNOSTICS (General Procedures). Enter code [xxxx to test the Sensor (Refer to appropriate BSD for the specific code). Block and unblock the Sensor. **The Display toggles between [1] and [0].**

**Y N**

Block the sensor. **There is +5 ± 0.3 VDC at J1 pin 3 of the sensor.**

**Y N**

Check the wire at J1/P1 pin 3 for an open circuit.
If the wire is good, replace the main PWB.

**There is +1.4 ± 0.2 VDC at J1/P1 pin 1 of the sensor.**

**Y N**

Check the wire at J1/P1 pin 1 for an open circuit.
If the wire is good, replace the Sensor before replacing the main PWB.

Unblock the sensor. **There is approximately 0 VDC at J1 pin 3 of the sensor.**

**Y N**

Replace the sensor.

Replace the main PWB.

The Sensor and its circuit appear to be operating normally, check the adjustment or alignment of the Sensor.

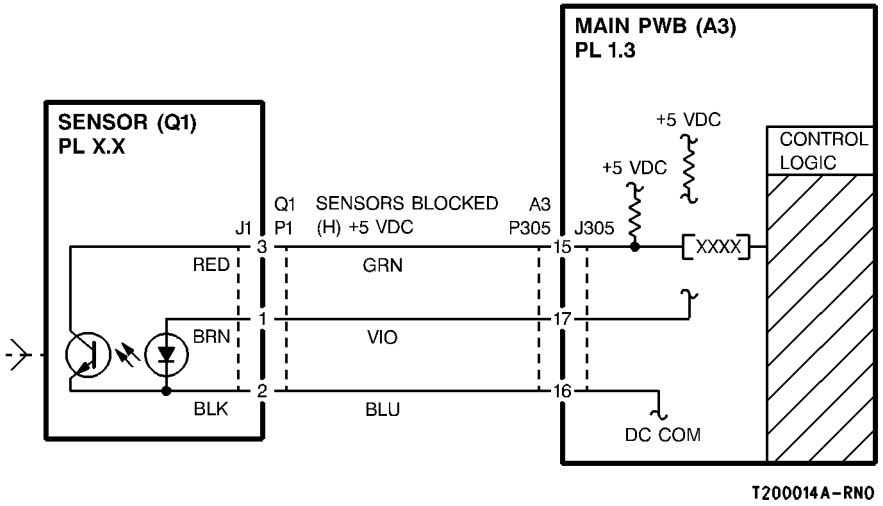


**Figure 1 Sensor (Generic)**

## Initial Actions

***NOTE:*** *This procedure can be used to check any switch. Due to the generic format of this RAP there will be no specific ADJ, PL or Diagnostic codes identified.*

## Procedure

( Figure 1): Enter DIAGNOSTICS (General Procedures). Enter code [xxxx to test the switch (Refer to appropriate BSD for the specific code). Actuate the switch. **The switch toggles from H to L or from L to H.**

**Y N**

**The message display indicates LOW all the time.**

**Y N**

Actuate the switch. **The voltage at J1-1 (use the actual connector/pin number from the appropriate BSD) goes to less than 0.4 VDC.**

**Y N**

Check the wiring between the switch and the Main PWB (A2).
If the wiring is OK, replace the switch.

Replace the Main PWB (A2) (PL X.X)

Replace the Switch (PL X.X)

The switch and its circuit appear to be operating normally. check the adjustment or alignment of the switch.

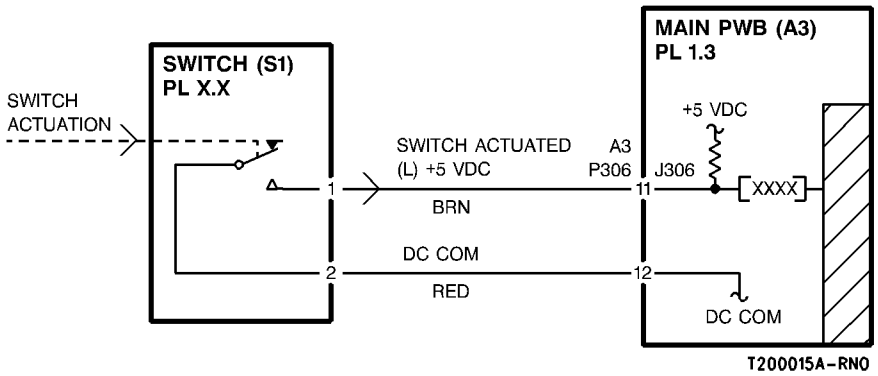


**Figure 1 Switch (Generic)**

# 3 Print Quality

**Print Quality**


Print Quality Initialization Procedure ..... 3-3
Print Defects ..... 3-3
Print Quality Definitions ..... 3-4
Print Quality General Diagnostics ..... 3-5
Print Quality Specifications ..... 3-5
Damaged Media ..... 3-8
Media Handling Problems ..... 3-8


**Print Quality RAPs**


PQ 1 Background ..... 3-9
PQ 2 Bands ..... 3-9
PQ 3 Bands ..... 3-10
PQ 4 Black Lines ..... 3-10
PQ 5 Black Prints ..... 3-11
PQ 6 Blank Prints / Partial Image ..... 3-11
PQ 7 Blurred Image ..... 3-12
PQ 8 Deletions (bands) ..... 3-12
PQ 9 Deletions (bands) ..... 3-13
PQ 10 Deletions (in solid and halftone areas) ..... 3-13
PQ 11 Deletions (spots) ..... 3-14
PQ 12 Finger Marks ..... 3-14
PQ 13 Light Image ..... 3-15
PQ 14 Misregistration ..... 3-15
PQ 15 Residual Image ..... 3-16
PQ 16 Skewed Image ..... 3-16
PQ 17 Smears ..... 3-17
PQ 17A Smudge ..... 3-17
PQ 18 Spots ..... 3-18
PQ 19 Uneven Density ..... 3-18
PQ 20 Unfused Prints ..... 3-19
PQ 21 Wrinkle ..... 3-19
PQ 22 Offsetting ..... 3-20

## Print Quality Initialization Procedure

Prior to any print quality troubleshooting, validate that the problem is in the IOT by entering [9-55]. Select test pattern 5. Examine the test print for defects. If defects appear, complete the following checklist. If the defects are still present after completing the checklist, refer to the Image Quality Defects and Classification information on the following pages to classify and repair the problem.

1. Drum life (Refer to Section 1)
2. Ensure that the Charge Scorotron is not damaged or contaminated.
3. Ensure that the Image Module Roller fully contacts the drum and does not exhibit abnormal wear or contamination.
4. Refer to ADJ 9.2, Electrostatic Series and check that the following voltages are within specification:
   - Charge Scorotron (V High)
   - Image Module LED Duty Cycle (V Low)
5. Check that the Toner Concentration (TC) is calibrated correctly [9-21-4]

If the print quality defect is still present, go to the Print Defects in this section.

## Print Defects

Print quality refers to the entire print. Defects can occur anywhere on the print. These defects could be damaged media or print quality defects.

Always eliminate problems that cause the damaged media before attempting to fix print quality problems. Some damaged media problems could cause print quality problems.

Compare the print defect to the definitions on this page and the next page. After you have determined the definition that best describes the print defect, go to the Section Contents page. The Section Contents page will direct you to a Print Quality Problem / Cause Table. The Problem / Cause Table lists the probable causes and corrective actions.

The PROBABLE CAUSES are arranged in order of most probable cause to least probable cause or the ease of the check. CORRECTIVE ACTIONS are given for each cause. Read all of the probable causes before taking any corrective action.

1. Start with the first PROBABLE CAUSE and continue through the list until you come to the cause that best applies to the image defect.
2. Perform the CORRECTIVE ACTION.
3. If the defect has been corrected, go to the Maintenance Activities in the Service Call Procedures in Section 1. If the defect is still present, continue with the other PROBABLE CAUSES.

# Print Quality Definitions

The following terms are some of the most commonly used terms that describe image quality problems.

## Background

Background occurs as darkness or dirtiness on the non-image areas of the print.

## Black Print

This is a print that is entirely black except for the lead edge, trail edge and possibly the left and right edges.

## Blank Print

This is a print entirely without an image.

## Deletions

An area of the image where information has been lost. The areas of deletions could be localized or bands from top to bottom or side to side.

## Density

The relative blackness between the image and non-image areas.

## Fuser Fix

This is a measure of how the toner particles adhere to the media as a result of the fusing process.

## Print Displacement

Part of the image information is being placed elsewhere on the print or it is completely missing. The area of the missing information is sharply defined. This is unlike deletions where the image is not sharply defined or clear.

## Print Distortion or Skew

The image is skewed on the media. The image from side to side or lead edge to trail edge is not parallel to the edges of the print. There is also distortion of the image from one side of the copy to the other. These defects are a result of a misadjustment of the media transportation system components.

## Light Image

These are prints where the density is lighter than the specified density for the printer.

## Line Darkness

This is the darkness and uniformity for a line.

## Misregistration

This is when the distance from the lead edge of the image to the lead edge of the media is not within specification.

## Offsetting

This is the transfer of toner from the print to the heat roll. Sometimes the toner is transferred back to the print or consecutive prints.

## Media Damage

This is any physical distortion to the media that is used in making a print. This distortion may include folds, wrinkles, etc.

## Media Handling

This is the process of transporting the media from the supply area through the xerographic and the fusing subsystems.

## Resolution

The uniformity or clarity of fine line detail.

## Residual Image

This is an image that is repeated onto the same print or consecutive prints. The image can either be a ghosting of the original image or a toner image. The repeated image is usually spaced 10.375 inches (265 mm) from the original image. This problem can be caused by poor cleaning of the drum, a drum that is worn, or offsetting by the Fuser.

## Smear

This is any image defect that occurs in the direction that is perpendicular to media feed and caused by a difference in the relative motion between the drum and media.

## Spots

These are defects that are 0.2 inches (5 mm) or smaller in diameter.

## Streak

This is any image defect that occurs in the direction of media feed.

## Unfused Print

This is a print where the image can easily be wiped off the media. The image has not adhered to the media.

# Print Quality General Diagnostics

It is important to understand the orientation of prints in order to troubleshoot image quality problems. The following terms will be used when referring to prints made on the printer:

1. **Process direction** is in the media feed direction.
2. **Cross-process direction** is in the side-to-side direction.

Determining the distance between defects could help isolate problems to a specific component. Defects that are 10.375 inches (265 mm) apart (lead edge of defect to lead edge of next defect) in the process direction could be caused by the drum. The circumference of the Drum is 10.375 inches ( 265 mm).

Defects that are 10.375 inches (265 mm) apart (lead edge of defect to lead edge of next defect) in the process direction could be caused by the heat roll.

***NOTE:*** *The Heat Roller and Drum are the same circumference. Perform a hard stop to examine the Heat Roller or the Drum to isolate the cause of the problem.*

# Print Quality Specifications

## Test Patterns

There are nine internal test patterns that can be run from diagnostic mode [9-55]. (refer to Section 6 for details)

Test Pattern 1 is used while adjusting lead edge. trail edge and side edge erase.

Test Pattern 2 is used to produce horizontal black and white horizontal/vertical bands and resolution targets.

Test Pattern 3 is used to produce ROGM image targets and 1.25” solid area squares that are 97.5 mm apart.

Test Pattern 4 is used to produce a 49 mm wide horizontal black band that is 450 mm from the lead edge of the print.

Test Pattern 5 is used to produce solid area squares, ROGM image targets and a grid of thin horizontal and vertical lines.

Test Pattern 6 is used to produce diagonally placed small ROGM targets.

Test Pattern 7 is used to produce diagonal horizontal and vertical lines that are 16.25 mm apart.

Test Pattern 8 is used to produce solid blank vertical bands that are 93.5 mm wide.

Test Pattern 9 is used to produce various small ROGM patterns.

## Solid Area Density (A)

This term refers to the image density of a totally black portion of the print.

Figure 1 Use a wide roll of media and run test pattern

[9-55-5]. Select the black squares (A) and use the SIR 495.01 (PN 82P520) reference scale to measure the density.

SPECIFICATION:

Media - All sites between 1.0 and 1.3 Solid Area Density (SAD)

Film - All sites equal to or greater than .85 SAD

## Background

This term refers to the density of the print in any non-image area.

Use a wide roll of media and run test pattern

[9-55-5]. Examine the print using the Background Reference Scale 302.02.

SPECIFICATION:

All non-image area should be no greater than 3.7 at printer installation and no greater than 5.9 over the life of the developer.

## Skips

This term means that a print image is partially deleted or appears stretched at a right angle to the media feed direction .

Use a wide roll of media and run test pattern

[9-55-5]. Examine the 2.0 LP/mm vertical band located near the center o the print for skips or smears.

SPECIFICATION:

The 2.0 LP/mm lines should be resolved.

## Resolution

This term refers to the degree to which fine details of a print are reproduced, for example, lines.

Figure 1 Use a wide roll of media and run test pattern [9-55-5. Evaluate the resolution targets (B) at each corner and three central locations for a total of seven targets.

SPECIFICATION:

The vertical and horizontal resolution for all targets should be equal to or greater than 4.0 LP/mm.

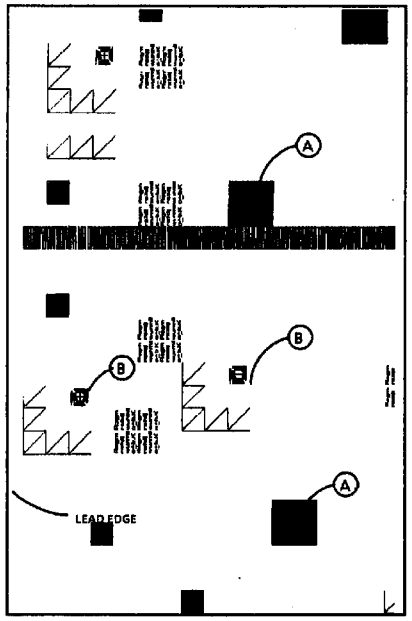


0101503A-RNO

**Figure 1 Test Pattern [9-55-5]**

## Lead Edge Registration (A)

This is the degree to which the lead edge of a print image is within a specified distance from the lead edge of the media.

Use a wide roll of media and run 4 prints of test pattern [9-55-7] and use the fourth print. Measure the distance from the lead edge of the media to the first horizontal line at the right side of the print and the center of the print.

SPECIFICATION:

16.25 +/- 2.0 mm

## Skew (B)

This is the degree to which media is fed at an angle to the print image.

Use a wide roll of media and run test pattern

[9-55-7]. Measure the distance at B (both places) 70 blocks apart.

SPECIFICATION:

+/- 0.5% or less

## Linearity of Lines

Linearity of lines refers to the straightness of the horizontal, vertical and diagonal lines.

Use a wide roll of media and run test pattern

[9-55-7]. Measure the straightness of a 50 block length in all three directions.

SPECIFICATION:

1 mm or less

## Side Edge Registration (C)

This is the degree to which the center of the image of a print is within a specified distance from the center of the media.

Figure 2 Use a wide roll of media and run test pattern [9-55-7]. Fold the print in half. At the fold mark, measure the distance between the fold line and the center line of the image.

SPECIFICATION:

6 mm or less

## Magnification (D1, D2)

Magnification refers to the rate at which an original image is enlarged or reduced on a print. The change in image length is either in the media feed direction (vertical) or the side-to-side direction (horizontal).

Measure the length of 50 blocks (D1) from side-to-side (horizontal) and one block down from the lead edge.

Measure the length of 60 blocks in the media feed direction (vertical) and one block in from the side.

SPECIFICATION:

Horizontal (D1) 812.8 mm +/- 4.06 mm

Vertical (D2) 975.4 mm +/- 4.88 mm

## Cut Accuracy

This is the dimension of variance from a true, horizontal cut.

SPECIFICATION:

+/- 4 mm

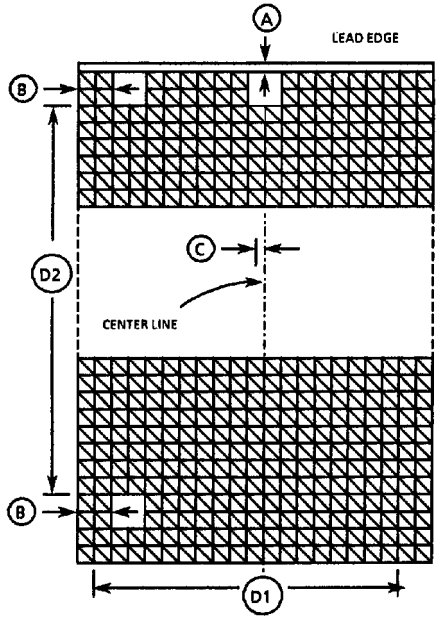


**Figure 2 Test Pattern [9-55-7]**

# Damaged Media

**Table 1 Damaged Media**

| Defect | probable cause | corrective action |
|---|---|---|
| **1. Crease Marks**<br>A thin irregular line on the media caused by stressing the media. | 1. This defect can be caused by incorrect handling of the media. | 1. Ensure that the media is stored correctly and is not damaged when inserted in the printer. |
| **2. Dog Ears**<br>This is a corner of the lead edge of the print that has been bent back. | 2. Curled media caused by a failed or damaged Detack Corotron. | 2a. Ensure that TAG 12 is installed.<br>2b. Try using a new roll of media.<br>2c. Check for an obstruction caused by a detack corotron. |
| **3. Frayed Side Edge**<br>This is damage to the sides of the print. | 3. Incorrect media side to side registration | 3. Ensure that the media is loaded correctly.<br>Check the media path for an obstruction. |
| **4. Wrinkle**<br>This is damage that is probably caused by the fuser subsystem. This is a severe case of creases that runs in the direction of media travel. | Damage or obstruction in the media path<br>Damp media<br>Incorrect fuser pressure<br>Heat roller is damaged or contaminated. | Clear the media path of obstructions<br>Refer to BSD 7.1 and BSD 7.3 to check for correct operation of the Paper heaters.<br>Ensure that the Customer is storing the media correctly.<br>Check the Fabric Guide ( REP 8.9) and the Pressure Plates ( REP 8.5).<br>Replace the heat roll ( REP 10.2). |
| **5. Cockle**<br>The media has a rough surface like an orange peel.<br>This damage could be caused by the fuser subsystem. | 5. Damage or obstruction in the media path<br>Fuser is too hot.<br>Damp media.<br>Pressure Plates or Fabric Guide damaged / installed incorrectly | Clear the media path of obstructions.<br>Check Fuser Temperature ( ADJ 10.1)<br>Refer to BSD 7.1 and BSD 7.3 to check for correct operation of the Paper heaters.<br>Ensure that the Customer is storing the media correctly.<br>Check the Fabric Guide ( REP 8.9) and the Pressure Plates ( REP 8.5). |
| **6. Other Damage** | | 6. If there are other defects on the print, go to Media Handling Problems on, following page. |

# Media Handling Problems

## Introduction

Experience has shown that many media transportation problems have more than one cause and must be handled using a systematic approach. Media transportation problems appear as one of the following symptoms:

- Pre-fuser jams
- Print quality defects
- Physical distortion of media

When these symptoms occur, perform the following checks of the media and printer and perform the corrective actions.

**Table 1 Media Check**

| Media Check | Corrective Action |
|---|---|
| 1. Check the type of media:<br>a. Bond media less than 20 lb may perform with less reliability than Xerox 20 lb.<br>b. Other brands of media may have different design specifications than Xerox media and may not give acceptable performance in the printer. | a. Use Xerox-qualified media.<br>b. After all media checks, test with fresh Xerox media. |
| 2. Check the storage of media:<br>a. Media that is exposed to the environment may have damp areas.<br>b. Media may have curled ends because of incorrect storage. | a. Suggest keeping the media in the package in which the Xerox media is shipped until the media is to be used.<br>b. Suggest that the media should be stored correctly.<br>c. Recommend keeping the printer switched on overnight to help eliminate moisture buildup. |

**Table 2 Printer Check**

| Printer Check | Corrective Action |
|---|---|
| 1. Contaminated or damaged transfer/ detack Corotron.<br>2. An incorrect electrostatic value can cause jams or deletions.<br>3. Detack Corotron shield incorrectly installed. | 1. Clean or replace if necessary ( PL 9.4).<br>2. Check the following:<br>a. Clean or replace the Corotron as required ( PL 9.4).<br>b. Perform GP 1, HVPS Checkout Procedure.<br>3. Check for correct installation |

## PQ 1 Background

**Table 1 Background Symptom / Check**

| Symptom / check | Probable Cause | Corrective Action |
|---|---|---|
| Contamination of the blank area by toner particles on the print | | |
| | 1. An incorrect electrostatic value | 1A. Perform Electrostatic Series ( ADJ 9.2).<br>1B. Perform GP 1 HVPS Checkout Procedure.<br>1C. Clean/Replace/Repair the corotrons. |
| | 2. Developer Bias incorrect. | 2A. Perform GP 1 HVPS Checkout Procedure.<br>2B. Ensure that TAG 19 is installed. |
| | 3. Toner concentration too high. | 3. Perform Image Density ( ADJ 9.3). |
| | 4. Erase Lamp operation. | 4. Refer to BSD 9.6 and check for correct operation of the Erase Lamp. |
| | 5. Contaminated charge scorotron | 5, Clean or replace if necessary ( PL 9.3). |
| | 6. Defective Cleaner Blade | 6. Replace the Cleaner Blade ( REP 9.4). |
| | 7. Web Oil system not operating correctly. | 7. Refer to BSD 10.2 and check Web Oil system for correct operation. |
| | 8. Contaminated or defective drum. | 8. Replace the drum ( REP 9.3). |

## PQ 2 Bands

**Table 1 Bands Symptom / Check**

| Symptom/ checks | Probable Cause | Corrective Action |
|---|---|---|
| Bands are 1 mm or more wide and are in the media feed direction. High density bands are called black lines. | | |
| | 1. Contaminated charge scorotron | 1. Clean / replace screen / pins ( REP 9.8). |
| | 2. Defective Cleaner Blade | 2. Replace the Cleaner Blade ( REP 9.4). |
| | 3. Contaminated magnetic roll. | 3. Check for foreign objects on the mag roll. |
| | 4. Incorrect Electrostatic value. | 4A. Ensure that TAG 19 is installed.<br>4B. Perform Electrostatic Series ( ADJ 9.2).<br>4C. Perform GP 1 HVPS Checkout Procedure.<br>4D. Clean / replace / repair the corotrons. |
| | 5. Toner cloud from the Developer Module contaminating the Drum and corotrons. | 5A. Ensure that the Air Pressure Tubes are clean ( REP 9.18).<br>5B. Check for toner buildup on the lower edge of the Developer Housing. |
| | 6. T/DT Corotron contaminated. | 6. Check / clean / repair |
| | 7. Contaminated or defective drum. | 7. Replace the drum ( REP 9.3). |
| | 8. Image Module LEDs operating incorrectly. | 8. Enter [9-21-5 and check for correct operation. (Refer to BSD 6.1, BSD 6.2 and check for correct electrical connections to/from the Receiver PWB and the LED Image Bar). |
| | 9. LED Bar without Tag 28 incorrectly connected to Main PWB. | 9. Connect to J307A. |
| | 10. Toner buildup on Magnetic Roll. | 10. Go to Technical Services Bulletin (TSB 98116) for toner removal procedure. |

## PQ 3 Bands

**Table 1 Bands Symptom / Check**

| Symptom/ check | Probable Cause | Corrective Action |
|---|---|---|
| Bands are 1 mm or more and are perpendicular to the media feed direction. High density bands are called black lines. | | |
| | 1. Defective or intermittent Charge Scorotron. | 1. Check / clean / replace the connections to the Charge Scorotron ( PL 9.3). |
| | 2. Defective Transfer / Detack Corotron. | 2A. Check / replace the Transfer / Detack Corotron. ( REP 9.9).<br>2B. Ensure that the Corotron is installed in the correct position. |
| | 3. Poor cleaning | 3. Replace the Cleaner Blade ( REP 9.4). |
| | 4. Defective or contaminated Drum. | 4. Determine and fix the cause of the damage to the drum. Replace the Drum ( REP 9.3). |

## PQ 4 Black Lines

**Table 1 Black Lines Symptom / Check**

| Symptom/ check | Probable Cause | Corrective Action |
|---|---|---|
| Black lines appear in the direction of media feed. | | |
| | 1. Developer Bias and Transfer Corotron voltage set incorrectly | 1. Ensure that TAG 19 is installed. |
| | 2. Contaminated, damaged or disconnected Charge Scorotron | 2. Clean/replace or check the connections to the charge scorotron ( PL 9.3). |
| | 3. Poor cleaning | 3. Replace the Cleaner Blade ( REP 9.4). |
| | 4. The surface of the heat roll is damaged. | 4. Determine and fix the cause of the damage to the heat roll. Replace the heat roll ( REP 10.2). |
| | 5. The drum surface is contaminated or damaged. | 5. Determine and fix the cause of the damage to the drum. Replace the Drum ( REP 9.3). |
| | 6. The fuser temperature is too high. | 6. Adjust the Fuser temperature ( ADJ 10.1) |
| | 7. Contaminated or damaged mag roll. | 7. Check for foreign objects on the mag roll. |
| | 8. Defective Transfer/Detack Corotron. | 8. Check / replace the Transfer / Detack Corotron. ( REP 9.1). |

## PQ 5 Black Prints

**Table 1 Black Prints Symptom / Check**

| Symptom/ check | Probable Cause | Corrective Action |
|---|---|---|
| The print is totally black with no image. | | |
| | 1. Defective Charge Scorotron | 1. Clean or replace the screen/pins ( REP 9.8). |
| | 2. Charge control circuit/ defective Harness | 2. Perform GP 1 HVPS Checkout Procedure. |

## PQ 6 Blank Prints / Partial Image

**Table 1 Blank Prints / Partial Image Symptom / Check**

| Symptom/ check | Probable Cause | Corrective Action |
|---|---|---|
| No image or a partial image is produced when making a print. | | |
| | 1. Developer Housing | 1A. Ensure that the Developer Housing Module drive gears are engaged and the developer housing is turning.<br>1B. Ensure that the gear lock is released from the Developer Housing Drive Gear. |
| | 2. Transfer Corotron | 2A. Check the Transfer Corotron for damage / contamination.<br>2B. Perform GP 1, HVPS Checkout Procedure. |
| | 3. Defective HVPS | 3. Perform GP 1, HVPS Checkout procedure. |
| | 4. Image Module LEDs inoperative | 4A. Enter [9-21-5 and check for correct operation. (Refer to BSD 6.1, BSD 6.2 and check for correct electrical connections to/from the Receiver PWB and the LED Image Bar.)<br>4B. Ensure that all connectors are seated and voltages are correct to the LED, 5VDC, RS422, Signal Harness, Receiver PWB. |
| | 5. No drum drive / defective drum. | 5. Refer to BSD 4.3 and check for correct drum drive. Replace the drum ( REP 9.3). |
| | 6. PJ 330 (Tag 28) or 307A (without Tag 28) is not correctly seated. | 6. Reseat the connector. |

## PQ 7 Blurred Image

**Table 1 Blurred Image Symptom / Check**

| Symptom/ check | Probable Cause | Corrective Action |
|---|---|---|
| The image is not clear or sharp. | | |
| | 1. Defective/contaminated Image Module. | 1A. Ensure the spacing rollers and drum ends are not contaminated/defective.<br>1B. Clean the LED Array with a lint-free cloth. |
| | 2. Contamination on Transfer/ Detack Corotron | 2A. Clean or replace as required.<br>2B. Perform GP 1, HVPS Checkout Procedure. |
| | 3. Defective drive gear | 3. Check the following drive gears for damage:<br>a. drum drive gear<br>b. developer drive gear<br>c. cleaner drive gear |
| | 4. Defective registration roller | 4. Replace as required ( PL 8.2). |
| | 5. Media transport | 5. Check the Media Transport gap ( ADJ 8.4). |
| | 6. Defective buckle control | 6. Replace the buckle switch ( PL 8.4). |

## PQ 8 Deletions (bands)

**Table 1 Deletions (bands) Symptom / Check**

| Symptom/ check | Probable Cause | Corrective Action |
|---|---|---|
| Deletion bands or very low image density in the print feed direction. | | |
| | 1. Damp media | 1A. Refer to BSD 7.1 and BSD 7.3 to check for correct operation of the Paper heaters.<br>1B. Ensure that the Customer is storing the media correctly. |
| | 2. Corotrons | 2A. Clean / replace or repair the T/DT corotrons ( REP 9.9). |
| | 3. Defective HVPS | 3. Perform GP 1, HVPS Checkout Procedure. |
| | 4. Developer Housing | 4A. Ensure that the Developer Housing is latched securely.<br>4B. Check the mag roll for foreign material or contamination. Ensure that there is an even coating of developer material on the mag roll. |
| | 5. Defective or contaminated LED Image Bar. | 5. Check / clean the LED Image Bar [9-21-5. ( PL 9.3) |
| | 6. Contaminated Erase Lamp. | 6. Clean with a lint free cloth. |
| | 7. Media transport | 7. Ensure that the gap ( ADJ 8.4) is set correctly. |
| | 8. Heat Roll | 8. Check for surface damage. ( PL 10.2) |
| | 9. Defective drum | 9. Replace the drum ( REP 9.3). |

## PQ 9 Deletions (bands)

**Table 1 Deletions (bands) Symptom / Check**

| Symptom/ check | Probable Cause | Corrective Action |
|---|---|---|
| Deletion bands or very low image density perpendicular to the print feed direction. | | |
| | 1. Damp media | 1A. Refer to BSD 7.1 and BSD 7.3 to check for correct operation of the Paper heaters.<br>1B. Ensure that the Customer is storing the media correctly. |
| | 2. Incorrect Corotron operation. | 2A. Check / Clean or replace the T/DT corotrons as required ( PL 9.4).<br>2B. Perform GP 1 HVPS Checkout Procedure. |
| | 4. Defective drum or no drum drive. | 4A. Check for correct operation of the drive system.<br>4B. Replace the drum ( REP 9.3). |
| | 5. Magnetic roll | 5A. Ensure that the housing is latched securely.<br>5B. Check the mag roll for damage or binding. |
| | 6. Image Module Roller not contacting drum | 6. Check/clean/replace as required ( PL 9.3). |
| | 7. Media Transport. | 7. Ensure that the Media Transport gap ( ADJ 8.4) is set correctly. |

## PQ 10 Deletions (in solid and halftone areas)

**Table 1 Deletions (in solid and halftone areas) Symptom / Check**

| Symptom/ check | Probable Cause | Corrective Action |
|---|---|---|
| Bands of deletion in the solid or halftone areas in the print feed direction. | | |
| | 1. Damp media | 1A. Refer to BSD 7.1 and BSD 7.3 to check for correct operation of the Paper heaters.<br>1B. Ensure that the Customer is storing the media correctly. |
| | 2. Exposure | 2A. Clean the Image Bar. Check / clean the Air Pressure Tubes ( REP 9.18).<br>2B. Enter [9-21-5 and check for correct operation. (Refer to BSD 6.1, BSD 6.2 and check for correct electrical connections to/from the Receiver PWB and the LED Image Bar). |
| | 3. Incorrect Corotron operation | 3. Perform GP 1, HVPS Checkout Procedure. |
| | 4. Magnetic roll | 4. Check the mag roll for damage or binding. |
| | 5. The surface of the heat roll is damaged. | 5. Determine and fix the cause of the damage to the heat roll. Replace the heat roll ( REP 10.2). |
| | 6. Media Transport. | 6. Ensure that the Media Transport gap ( ADJ 8.4) is set correctly. |

## PQ 11 Deletions (spots)

**Table 1 Deletions (spots) Symptom / Check**

| Symptom/ check | Probable Cause | Corrective Action |
|---|---|---|
| Localized areas of deletion in the solid or halftone areas in the print feed direction. | | |
| | 1. Damp media | 1A. Refer to BSD 7.1 and BSD 7.3 to check for correct operation of the Paper heaters.<br>1B. Ensure that the Customer is storing the media correctly. |
| | 2. T/DT Corotrons | 2. Perform GP 1, HVPS Checkout Procedure. |
| | 3. Developer Housing | 3A. Ensure that the housing is latched securely.<br>3B. Check the mag roll for damage or binding. |
| | 4. Insufficient toner resulting in developer bead carryover. | 4A. Perform Electrostatic Series ( ADJ 9.2).<br>4B. Perform Image Density ( ADJ 9.3). |
| | 5. The surface of the heat roll is damaged. | 5. Determine and fix the cause of the damage to the heat roll. Replace the heat roll ( REP 10.2) |
| | 6. Defective drum | 6. Replace the drum ( REP 9.3) |
| | 7. Media transport | 7. Check for correct gap ( ADJ 8.4). |
| | 8. The Fabric Guide is contaminated, wrinkled or incorrectly tensioned. | 8. Check/replace the Fabric Guide ( PL 10.2). |

## PQ 12 Finger Marks

**Table 1 Finger Marks Symptom / Check**

| Symptom/ check | Probable Cause | Corrective Action |
|---|---|---|
| Toner marks on the lead edge or trail edge of the print. | | |
| | 1. Defective or dirty transfer/ detack Corotron | 1A. Clean or replace the Corotron wire ( PL 9.4).<br>1B. Perform GP 1, HVPS Checkout Procedure. |
| | 2. Cleaner Seal | 2. Check / clean as required. ( PL 9.5A) |
| | 3. Web Oiler | 3. Check / replace ( REP 10.9) |
| | 4. Turnaround Baffle | 4. Ensure that the baffle is free of contamination ( PL 8.2). |
| | 5. Heat Roll | 5. Check / replace ( REP 10.2) |
| | 6. Fabric Guide | 6. Check / replace ( REP 8.9) |

## PQ 13 Light Image

**Table 1 Light Image Symptom / Check**

| Symptom/ check | Probable Cause | Corrective Action |
|---|---|---|
| Image area of a print has low density. | | |
| | 1. Damp media | 1A. Refer to BSD 7.1 and BSD 7.3 to check for correct operation of the Paper heaters.<br>1B. Ensure that the Customer is storing the media correctly. |
| | 2. Incorrect Image Module LED duty cycle | 2. Perform Electrostatic Series ( ADJ 9.2). |
| | 3. Incorrect Corotron operation | 3. Perform GP 1, HVPS Checkout Procedure. |
| | 4. Incorrect Image Density adjustment | 4A. Perform Image Density ( ADJ 9.3).<br>4B. Replace the sensor ( PL 9.9). |
| | 5. Defective drum ground. | 5. Ensure that the drum is correctly grounded. |
| | 6. Defective drum. | 6. Replace the drum ( REP 9.3). |
| | 7. Media Transport | 7. Ensure that the Media Transport gap ( ADJ 8.4) is set correctly. |
| | 8. Developer Housing | 8. Ensure the housing is latched securely. |

## PQ 14 Misregistration

**Table 1 Misregistration Symptom / Check**

| Symptom/ check | Probable Cause | Corrective Action |
|---|---|---|
| The registration of the image on the prints is incorrect from top to bottom or side to side. | | |
| | 1. Incorrect registration adjustment | 1. Adjust Lead Edge Registration ( ADJ 8.2). |
| | 2. Damaged or worn components in the media feeding area | 2. Check the components for damage or wear. |
| | 3. Defective registration sensor | 3. Refer to BSD 8.1 and check the operation of the registration sensor. Replace the sensor if required ( REP 8.8). |
| | 4. Incorrect registration roller nip | 4. Clean or replace the registration roller ( PL 8.2). |
| | 5. Incorrectly loaded media | 5. Instruct the operator on loading the media correctly. |

## PQ 15 Residual Image

**Table 1 Residual Image Symptom / Check**

| Symptom/ check | Probable Cause | Corrective Action |
|---|---|---|
| This is an image that is repeated on the same print or consecutive prints. The image can either be a ghosting of the original image or a toner image. The repeated image is usually spaced 10.38 inches (265 mm) from the original image. | | |
| Perform Panic Stop / Image on Drum procedure (Section 6), and examine the drum for the defect. | 1. The Cleaner Blade makes poor contact with drum. | 1. Replace the Cleaner Blade ( REP 9.4). |
| | 2. Defective erase lamp | 2. Refer to BSD 9.6 and check the erase lamp. Replace the lamp if necessary ( PL 9.5A). |
| | 3. Contaminated drum | 3. Replace the drum ( REP 9.3). |

## PQ 16 Skewed Image

**Table 1 Skewed Image Symptom / Check**

| Symptom/ check | Probable Cause | Corrective Action |
|---|---|---|
| The image is skewed to one side on the print because the media is skewed. | | |
| | 1. Media is not loaded correctly. | 1. Load the media correctly and instruct the operator on loading the media correctly. |
| | 2. Media Transport. | 2. Ensure that the Media Transport gap ( ADJ 8.4) is set correctly. |
| | 3. Defective or contaminated rollers in the media feed area | 3. Check the rollers and other components in the media feed area. |
| | 4. Incorrect registration roller nip | 4. Clean or replace the registration roller ( PL 8.2). |
| | 5. Obstruction in media path | 5. Check media path. |

# PQ 17 Smears

**Table 1 Smears Symptom / Check**

| Symptom/ check | Location of Smear | Probable Cause | Corrective Action |
|---|---|---|---|
| Areas of the image on the print are blurred. This occurs at the image transfer area and is caused by a difference of speed between the drum and the media. | | | |
| | 20 - 25 mm from the **Lead Edge** of the print | Transfer/Detack Shield incorrectly installed. | Check / replace ( PL 9.4) |
| | 40 - 50 mm from the **Lead Edge** of the print | Fabric Guide worn, contaminated or incorrectly installed. | Check / replace ( REP 8.9). |
| | 106 - 126 mm from the **Lead Edge** of the print | 1. Worn (smooth) Heat Roll ( PL 10.2)<br>2. Worn Contaminated Fabric Guide ( PL 10.3)<br>3. Pressure Plate A installed incorrectly or deformed ( PL 10.3). | Check / replace ( REP 10.2)<br>Check / replace ( REP 8.9)<br>3. Check / replace ( REP 8.5) |
| | 150 - 170 mm from the **Lead Edge** of the print | Pressure Plate B installed incorrectly or deformed. | Check / replace ( REP 8.5) |
| | 140 - 160 mm from the **Trail Edge** of the print | Cutter | Check for loose Cutter Drive Pulley, Shim / replace ( PL 7.8) |
| | 66 - 86 mm from the **Trail Edge** of the print (Register Roll Exit Smear) | Buckle Switch | Enter [8-2 and check for correct operation ( PL 8.4) |
| | Random smears | Media Transport | Ensure that the Media Transport gap ( ADJ 8.4) is set correctly. |

# PQ 17A Smudge

**Table 1 Smudge Symptom / Check**

| Symptom/ check | Location of Smudge | Probable Cause | Corrective Action |
|---|---|---|---|
| A smudge is a displacement of the toner image on the drum or the media. | | | |
| Perform GP 2, Image on Drum to determine if the Smudge occurs on the media or the drum. | Media | Heat Roll | Check for a worn (smooth) Heat Roll. Replace ( REP 10.2) |
| | Media | Fabric Guide | Check for a worn / contaminated Fabric Guide. ( REP 8.9) |
| | Media | Excessive media curl (smudge appears 100 mm from lead or trail edge) | Ask the customer to replace the media. |
| | Media | Detack Corotron | Check for contamination or signs of arcing. Clean / replace ( PL 9.4) |
| | Media | Buckle Switch | Check the Buckle Switch for correct operation ( PL 8.4) |
| Vellum Smudge is a special defect that exhibits marginal fusing fix. Toner can chip off of the media and horizontal lines are broken (image displacement). | Combination of Vellum beam strength and low Heat Roll drive force. (The media is flexible enough that it buckles between Pressure Plates A and B. The toner then melts and partially sticks to the Heat Roll. As the media enters the Pressure Plate B, it flattens and the image is displaced in front of it's correct position. The toner can also become a clump on the media and easily chip off of the media.) | | Replace the Fabric Guide ( REP 8.9) and the Heat Roll ( REP 10.2). |
| | Drum | Mechanical interference with the image on the drum | Check for interference. |
| | Drum | Buildup of developer material on the lower extrusion of the developer housing rubbing the developed image on the drum. | Push excess developer material back into the housing. |

## PQ 18 Spots

**Table 1 Spots Symptom / Check**

| Symptom/ check | Probable Cause | Corrective Action |
|---|---|---|
| Circular black spots on the print. | | |
| Perform Panic Stop/Image on Drum procedure (Section 6), and examine the drum for the defect. | 1. Defective, damaged or contaminated drum | 1. If the drum is damaged, determine and fix the cause of the damage to the drum. Replace the drum ( REP 9.3). |
| Repetitive spots | 2. Contaminated heat roll | 2. Clean or replace the heat roll ( REP 10.2). |
| Repetitive spots | 3. Contaminated fuser thermistor | 3. Clean the thermistor ( PL 10.4). |
| Random spots | 4. Contaminated Web Oiler | 4A. Check / replace ( REP 10.9)<br>4B. Check / adjust oil dispense rate [10-32]. |
| Random spots | 5. Defective Lower Cleaning Seal | 5. Check / replace ( PL 9.10). |
| Random spots | 6. Charge scorotron | 6. Clean or replace the scorotron ( REP 9.8). |

## PQ 19 Uneven Density

**Table 1 Uneven Density Symptom / Check**

| Symptom/ check | Probable Cause | Corrective Action |
|---|---|---|
| Density and line thickness vary across the print. | | |
| | 1. Incorrect Corotron operation | 1. Perform GP 1, HVPS Checkout Procedure. |
| | 2. Contaminated LED Image Bar | 2. Check / clean the Image Bar. Check / clean the Air Pressure Tubes ( PL 9.9). |
| | 3. Machine level | 3. Check the level of the machine. (See Installation Procedure in Section 6. |
| | 4. Developer mag brush not contacting the drum evenly. | 4A. Clean drum ends and the Spacer Rolls on the Developer Housing ( PL 9.10).<br>4B. Ensure that the housing is latched securely. |
| | 5. Defective drum | 5. Clean or replace the drum ( REP 9.3). |

## PQ 20 Unfused Prints

**Table 1 Unfused Prints Symptom / Check**

| Symptom/ check | Probable Cause | Corrective Action |
|---|---|---|
| Characters and image are easily rubbed off a print. | | |
| | 1. Damp media | 1A. Refer to BSD 7.1 and BSD 7.3 to check for correct operation of the Paper heaters.<br>1B. Ensure that the Customer is storing the media correctly. |
| | 2. Incorrect fuser temperature | 2. Adjust the fuser temperature ( ADJ 10.1). |
| | 3. Incorrect fuser pressure | 3. Check pressure plates for damage or deformation ( REP 8.5). |
| | 4. Defective heat roll | 4. Replace the Heat Roll ( REP 10.2) |
| | 5. Fabric Guide. | 5. Ensure Fabric Guide is installed correctly ( REP 8.9). |

## PQ 21 Wrinkle

**Table 1 Wrinkle Symptom / Check**

| Symptom/ check | Probable Cause | Corrective Action |
|---|---|---|
| This is damage that is probably caused by the fuser subsystem. This is a severe case of creases that runs in the direction of media travel. | | |
| | 1. Damp media | 1A. Refer to BSD 7.1 and BSD 7.3 to check for correct operation of the Paper heaters.<br>1B. Ensure that the Customer is storing the media correctly. |
| | 2. Damaged or contaminated pinch rolls | 2. Clean / replace the pinch rolls ( REP 7.3). |
| | 3. Damaged or contaminated heat roll | 3. Clean / replace the Heat Roll ( REP 10.2). |
| | 4. Incorrect fuser contact pressure | 4. Check the Pressure Plates ( REP 8.5) and Fabric Guide ( REP 8.9) for damage. |
| | 5. Incorrect fuser temperature | 5. Adjust Fuser Temperature ( ADJ 10.1). |
| | 6. Registration Rolls misaligned. | 6. Replace the rolls as required ( PL 8.2). |

# PQ 22 Offsetting

**Table 1 Offsetting Symptom / Check**

| **Symptom/ check** | **Probable Cause** | **Corrective Action** |
|---|---|---|
| Offsetting is the result of toner adhering to the Fuser Heat Roll and transferring to subsequent prints. | | |
| | 1. There is insufficient fuser oil on the Heat Roll. | 1A. Check/replace the Web Oiler ( REP 10.7).<br>1B. Check/adjust oil dispense rate [10-32]. |
| | 2. The fuser temperature is out of specification. | 2. Check Fuser Temperature ( ADJ 10.1). |
| | 3. The Fabric Guide is not contacting the Fuser Heat Roll uniformly. | 3. Check / replace the Fabric Guide ( REP 8.9) and Pressure Plates ( REP 8.5). |
| | 4. Media is damp. | 4A. Ensure that the media is stored correctly.<br>4B. Refer to BSD 7.1 and BSD 7.3 to check for correct operation of the paper heaters. |
| | 5. Damaged or contaminated heat roll | 5. Clean or replace the Heat Roll ( REP 10.2). |

# Repairs/Adjustments

## Repairs

### Electrical


REP 3.1 Main PWB ..... 4-3
REP 3.2 High Voltage Power Supply ..... 4-7


### RFC


REP 7.1 Media Supply Drawer ..... 4-8
REP 7.2 Rewind Gear and Rewind Internal Gear ..... 4-9
REP 7.3 Roll Feed Pinch Rolls ..... 4-10
REP 7.4 Roll Feed Drive Rolls ..... 4-11
REP 7.5 Feed Clutch ..... 4-12
REP 7.6 Rewind Clutch ..... 4-13
REP 7.7 Motion Sensor ..... 4-14
REP 7.9 Roll Drive Motor ..... 4-15
REP 7.10A Lower Media Roll Heater ..... 4-16
REP 7.10B Upper Media Roll Heater ..... 4-18
REP 7.11 Encoder Disk ..... 4-18


### Paper Transportation


REP 8.1 Media Transport Assembly ..... 4-20
REP 8.2 Media Exit Switch ..... 4-23
REP 8.3 Buckle Switch ..... 4-24
REP 8.4 Cut Sheet Media Feed Clutch - 8830 and 8825 with Tag/MOD 90 ..... 4-25
REP 8.5 Pressure Plates ..... 4-26
REP 8.6 Sheet Drive Roll - 8830 and 8825 with Tag/MOD 90 ..... 4-28
REP 8.7 Sheet Pinch Rolls - 8830 and 8825 with Tag/MOD 90 ..... 4-29
REP 8.8 Media Registration Sensor ..... 4-30
REP 8.9 Fabric Guide ..... 4-31
REP 8.10 Media Transport Drive Motor ..... 4-32
REP 8.11 Sheet Feed Switch - 8830 and 8825 with Tag/MOD 90 ..... 4-34
REP 8.12 Registration Pinch Rolls ..... 4-34
REP 8.13 Media Feed Drive Belt ..... 4-37
REP 8.15 Cutter Home Sensor ..... 4-39
REP 8.16 Exit Roll ..... 4-40
REP 8.17 Registration Drive Roll ..... 4-41


### Xerographics


REP 9.1 Xerographic Module ..... 4-43
REP 9.2 Drum Assembly ..... 4-46
REP 9.3 Drum ..... 4-49
REP 9.4 Cleaner Blade Kit ..... 4-50
REP 9.5 Developer Module ..... 4-54
REP 9.6 Cartridge Drive Motor ..... 4-58
REP 9.7 Developer Material ..... 4-59
REP 9.8 Scorotron Pin Kit ..... 4-66
REP 9.9 Transfer / Detack Corotron ..... 4-68
REP 9.11 Toner Sensor ..... 4-69
REP 9.12 Toner Cartridge Home Sensor ..... 4-70
REP 9.13 Sump Shield ..... 4-72
REP 9.14 Cartridge Drive Plate ..... 4-74
REP 9.17 Photoreceptor Seal ..... 4-78
REP 9.18 Air Pressure Tubes ..... 4-79
REP 9.19 Roller Kit ..... 4-81
REP 9.20 Image Module ..... 4-81


### Fuser


REP 10.1 Heat Rod ..... 4-88
REP 10.2 Heat Roll ..... 4-92
REP 10.3 Fuser Triac ..... 4-92
REP 10.7 Web Oiler Assembly ..... 4-93
REP 10.8 Stripper Fingers ..... 4-93
REP 10.9 Web Oiler ..... 4-94


## Adjustments


ADJ 3.2 Country Configuration ..... 4-97
ADJ 8.1 Vertical Magnification ..... 4-97
ADJ 8.2 Lead Edge Registration ..... 4-99
ADJ 8.3 Cut Length ..... 4-100
ADJ 8.4 Media Transport ..... 4-101
ADJ 9.2 Electrostatic Series ..... 4-103
ADJ 9.3 Image Density ..... 4-111
ADJ 9.6 Augers ..... 4-112
ADJ 9.5 Toner Cartridge Home Sensor ..... 4-113
ADJ 10.1 Fuser Temperature (NVM) ..... 4-115
ADJ 10.2 Fuser Temperature (with Probe) ..... 4-116
ADJ 10.3 Fuser Temperature (with Tape) ..... 4-118

# REP 3.1 Main PWB

**Parts List on PL 1.1A**

**WARNING**

**Switch off the Controller and the Printer Main Power Switches. Disconnect the Printer Power Cord.**

**CAUTION**

*Electrostatic Discharge Damage (ESD) may occur. Use ESD procedures and Antistatic Wrist Strap to avoid damage to PWBs or components.*

## Removal

1. Check the Printer Tag Matrix to see if Tag 28 is installed. This information will be needed later in this procedure.
2. (Figure 1): Prepare to remove the Controller.

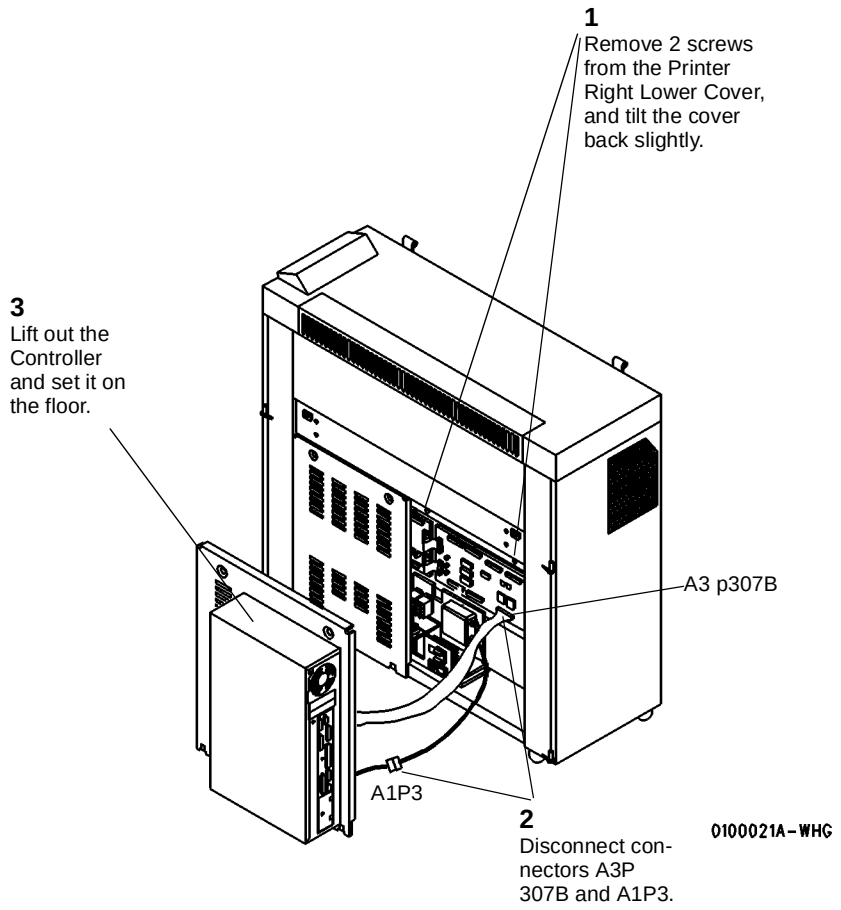


**Figure 1 Removing the Controller**

3. Attach a Static Wrist Strap between your wrist and the unpainted metal chassis of the Controller.

4. (Figure 2): Disconnect the 10 connectors from the Printer Main PWB.

***NOTE:*** *Position the Pin 1 Locating Dot as shown.*

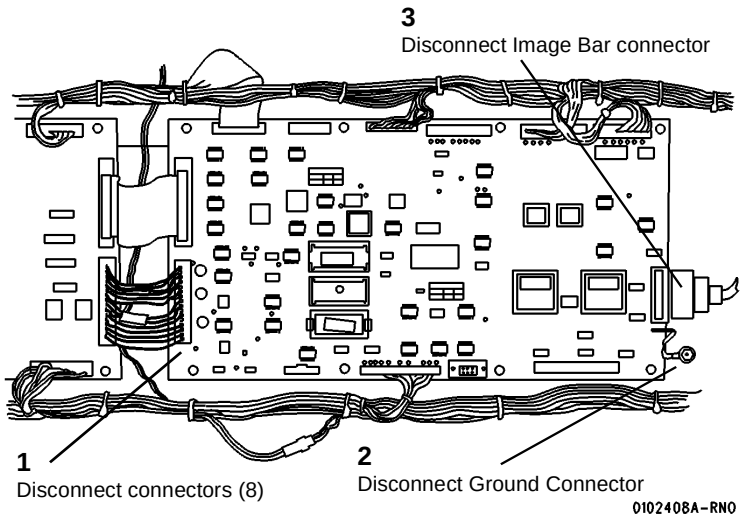


**Figure 2 Ground Connector location on Main PWB**

5. Pull the 8 plastic fasteners outward and remove the Printer Main PWB.
6. (Figure 3): Remove the NVM integrated circuit from the existing Main PWB.

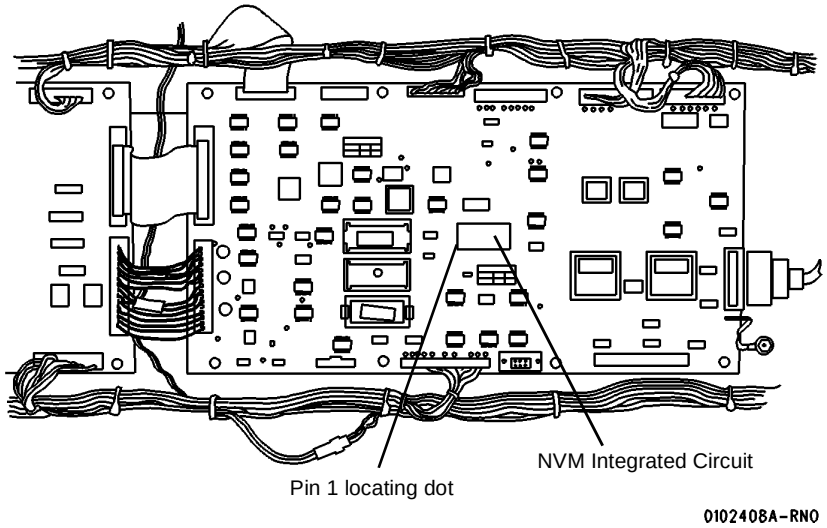


**Figure 3 NVM Integrated Circuit**

7. (Figure 4): Install the existing NVM integrated circuit into the socket on the new Main PWB.

***NOTE:*** *Position the Pin 1 locating dot as shown.*

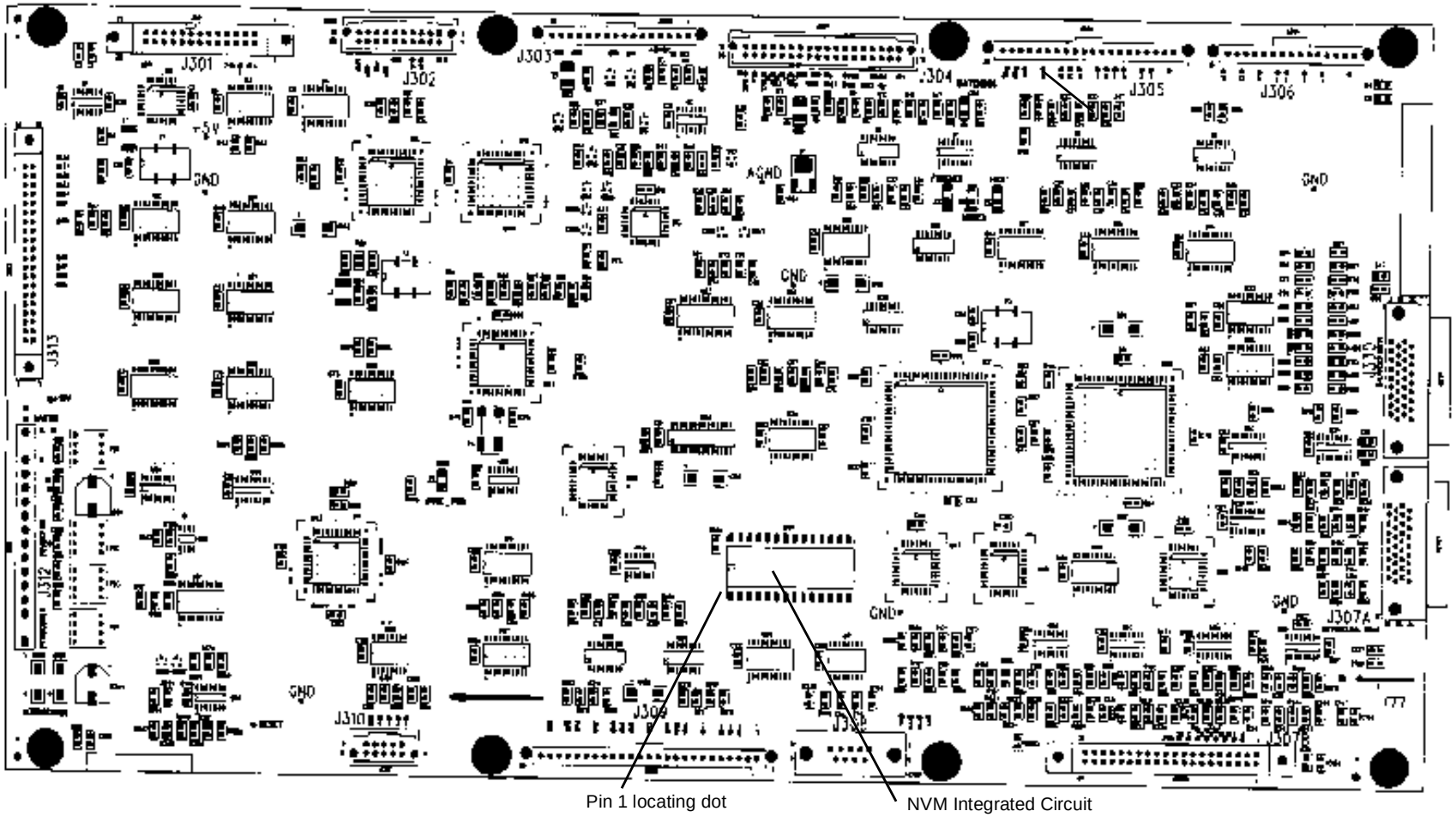


**Figure 4 Installing the NVM Integrated Circuit on the new Main PWB**

8. Install the new Main PWB over the 8 plastic fasteners. (Press down each plastic fastener to secure the Main PWB.)

9. (Figure 5): Connect the connectors:

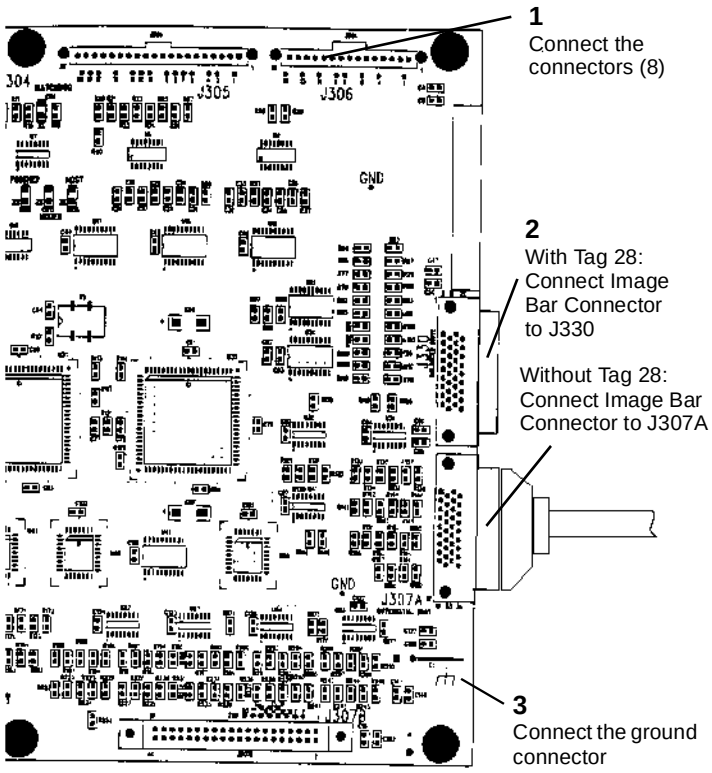


**Figure 5 Connecting P307A to new Main PWB**

10. Connect the remaining connectors and the ground connector to the Main PWB.
11. Check the Xerox BBS to determine the current version of software to be installed on the Main PWB.
12. Check the version of the firmware that is currently loaded onto the newly installed Main PWB by performing the following:
    a. Connect the Printer Power Cord.
    b. Hold down the 0 (zero) button on the Printer Control Panel and switch on the Printer. Continue to hold down the 0 button until the Control Panel has emitted two beeps;. The printer is now in the Diagnostic Mode.
    c. Observe the Printer Control Panel Display during the power-up sequence:
       - If the firmware version IS NOT the current version, go to GP 6 Downloading Firmware From a Laptop.
       - If the firmware version IS the current version, switch off the printer and continue on with this procedure.
13. Connect Connectors A3P307B and A1P3.
14. Reinstall the Controller.
15. While holding down the 0 key on the Printer Control Panel, switch on the printer and the controller. Continue to hold down the key until two beeps are heard.
16. Enter the diagnostic code Chain 09 Test 00, and select Plot 5. A test print should be generated.
17. Enter the diagnostic code Chain 03 Test 00 to leave the Diagnostic Mode and resume normal operation.
18. Mark Tag/MOD 27 on the Printer Tag Matrix.

# REP 3.2 High Voltage Power Supply

**Parts List on PL 1.3**

**WARNING**

**Switch off the Main Power Switch. Disconnect the Power Cord.**

## Removal

1. Loosen the screws and open the Rear Door.
2. (Figure 1): Remove the High Voltage Power Supply.

## Replacement

1. If a new High Voltage Power Supply is being installed, perform the Electrostatic Series (ADJ 9.2).

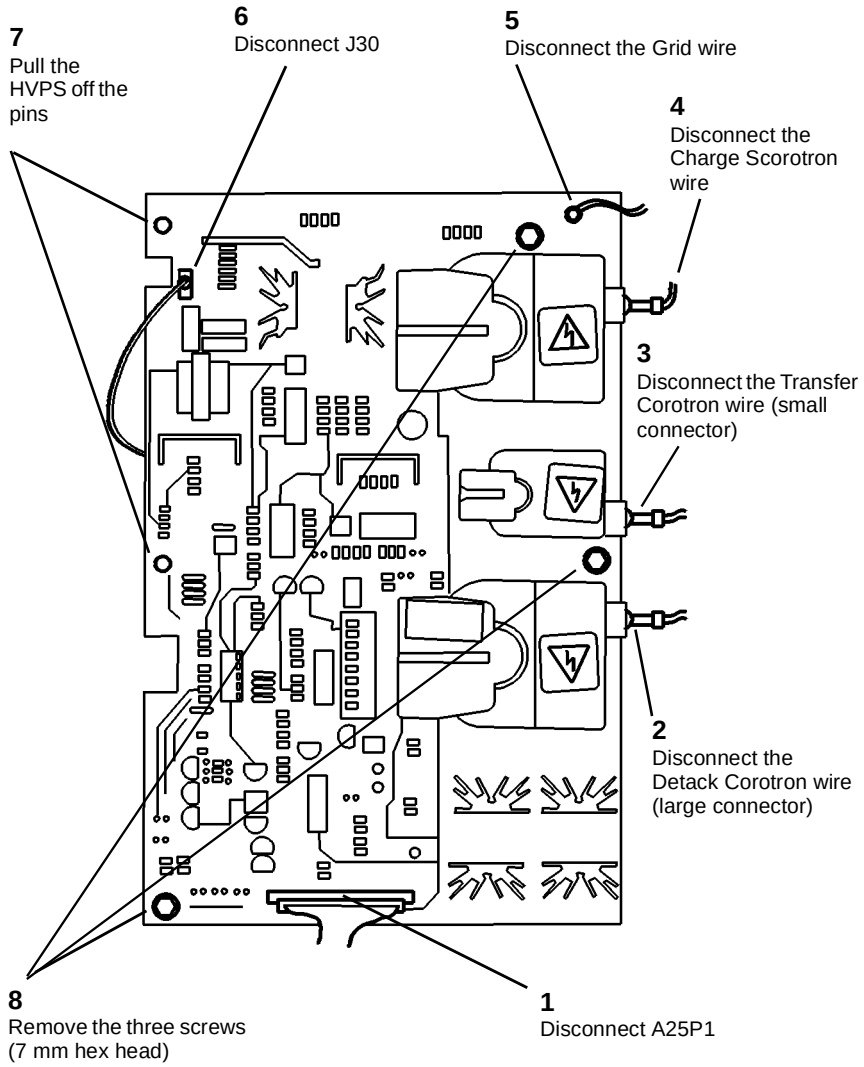


**Figure 1 Removing the High Voltage Power Supply**

# REP 7.1 Media Supply Drawer

## Parts List on PL 7.1

**WARNING**

**Switch off the Main Power Switch. Disconnect the Power Cord.**

***NOTE:*** *All three Roll Supply Drawer Assemblies are removed the same way. The 8825 comes with Media Supply Drawer 1 or 2. The customer can order it with 2 drawers or have Drawer 2 retrofitted on site. (Drawer 2 is TAG 90.)*

### Removal

1. Open the Media Supply Drawer that is to be removed.
2. (Figure 1): Remove the Cover.

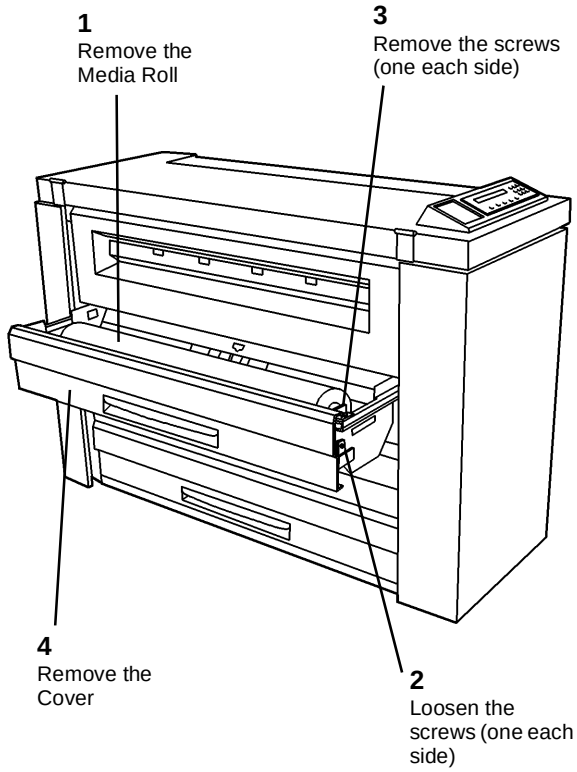


**Figure 1 Removing the Cover**

3. (Figure 2): Remove the Media Supply Drawer.

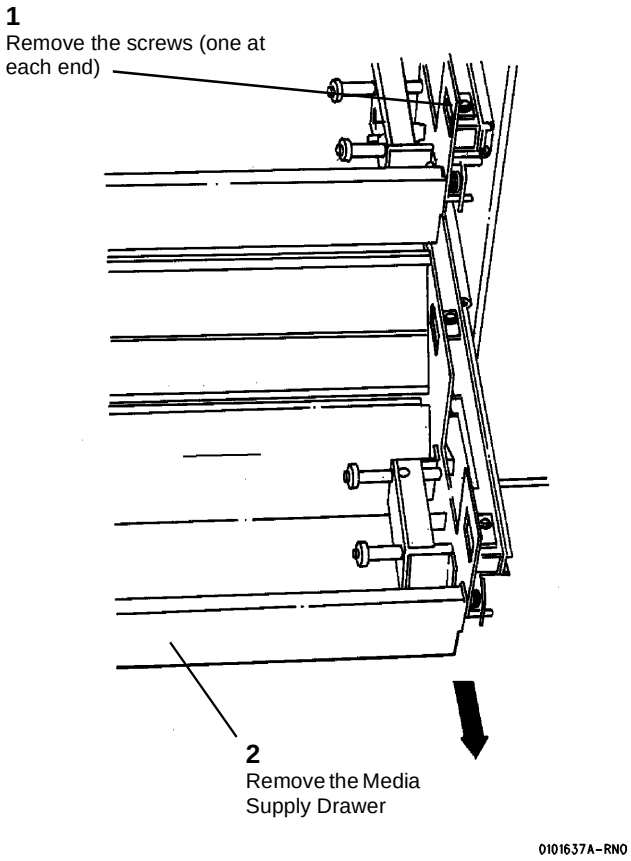


**Figure 2 Removing the Media Supply Drawer**

# REP 7.2 Rewind Gear and Rewind Internal Gear

**Parts List on PL 7.3**

**WARNING**

**Switch off the Main Power Switch. Disconnect the Power Cord.**

***NOTE:*** *All three Rewind Gears and Rewind Internal Gear Assemblies are removed the same way.*

## Removal

1. Pull out the Media Supply Drawer.
2. Remove the roll of media.
3. (Figure 1): Remove the Rewind Gear and the Rewind Internal Gear.

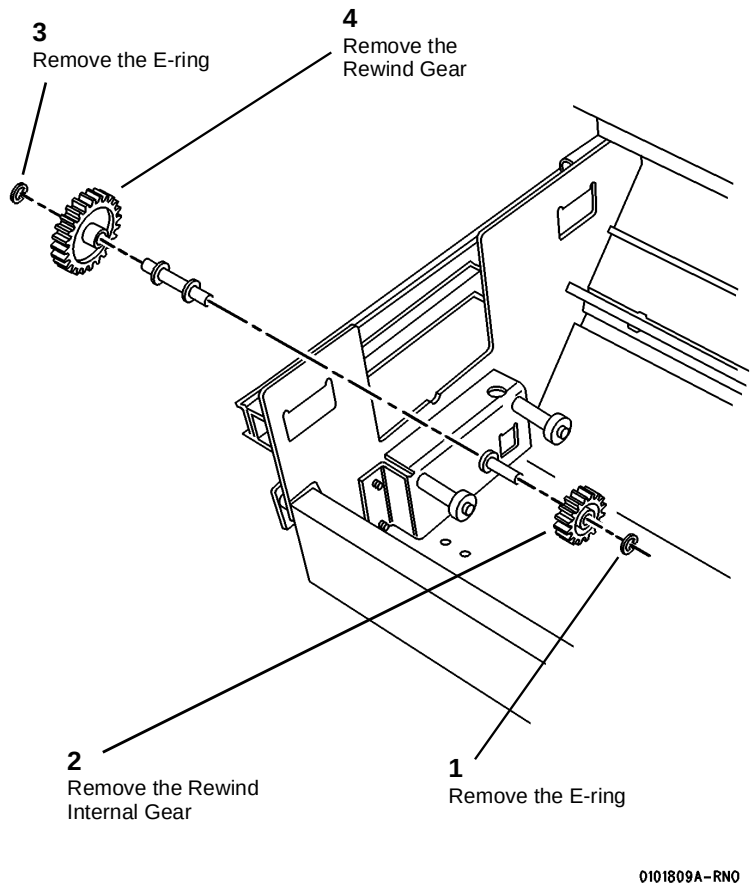


**Figure 1 Removing the Rewind Gears**

# REP 7.3 Roll Feed Pinch Rolls

**Parts List on PL 7.5**

**WARNING**

**Switch off the Main Power Switch. Disconnect the Power Cord.**

***NOTE:*** *All three Roll Feed Pinch Roll Assemblies are removed the same way.*

## Removal

1. Open the Media Supply Drawer and remove the Media Roll.
2. (Figure 1): Remove the Roll Feed Pinch Rolls.

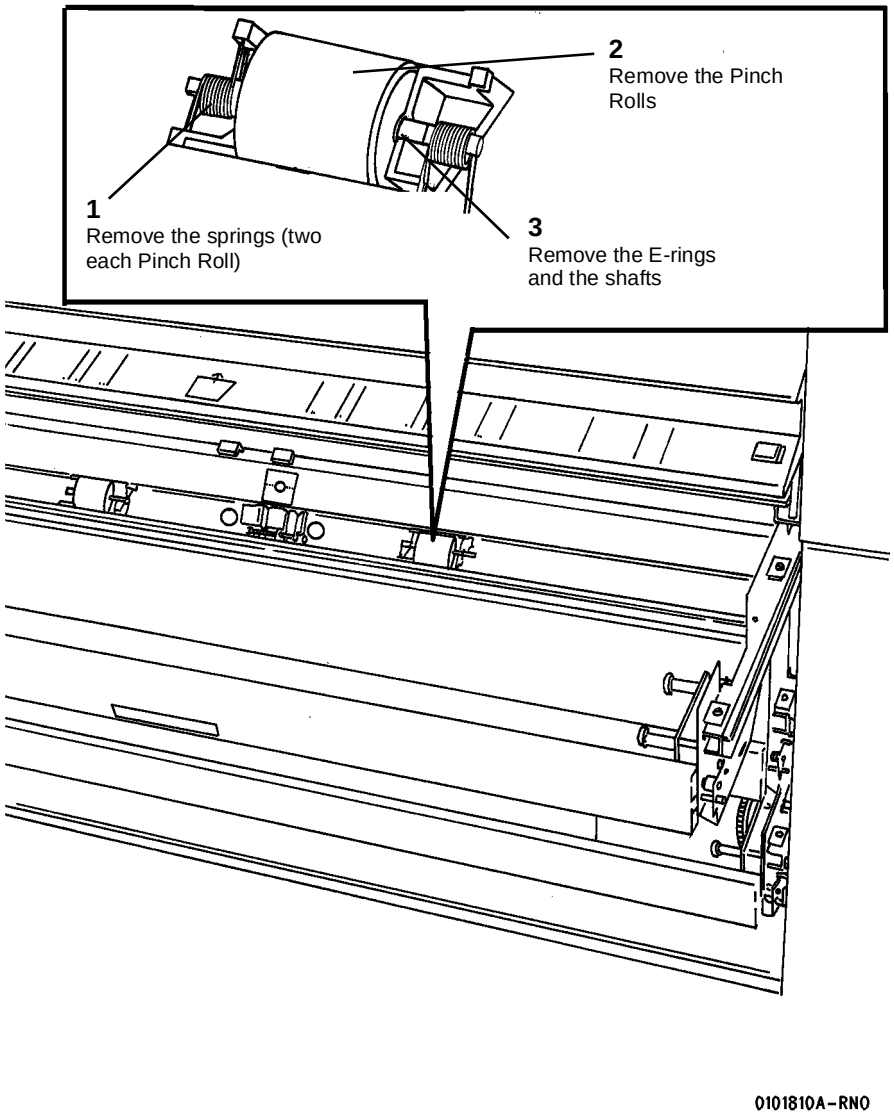


**Figure 1 Removing the Roll Feed Pinch Rolls**

# REP 7.4 Roll Feed Drive Rolls

**Parts List on PL 7.1**

**WARNING**

**Switch off the Main Power Switch. Disconnect the Power Cord.**

***NOTE:*** *All three Roll Feed Drive Roll assemblies are removed the same way.*

## Removal

1. Remove the appropriate Media Supply Drawer (REP 7.1).
2. Remove the Feed Clutch (REP 7.5).
3. Remove the Toner Waste Container.
4. (Figure 1): Remove the Roll Feed Drive Rolls.

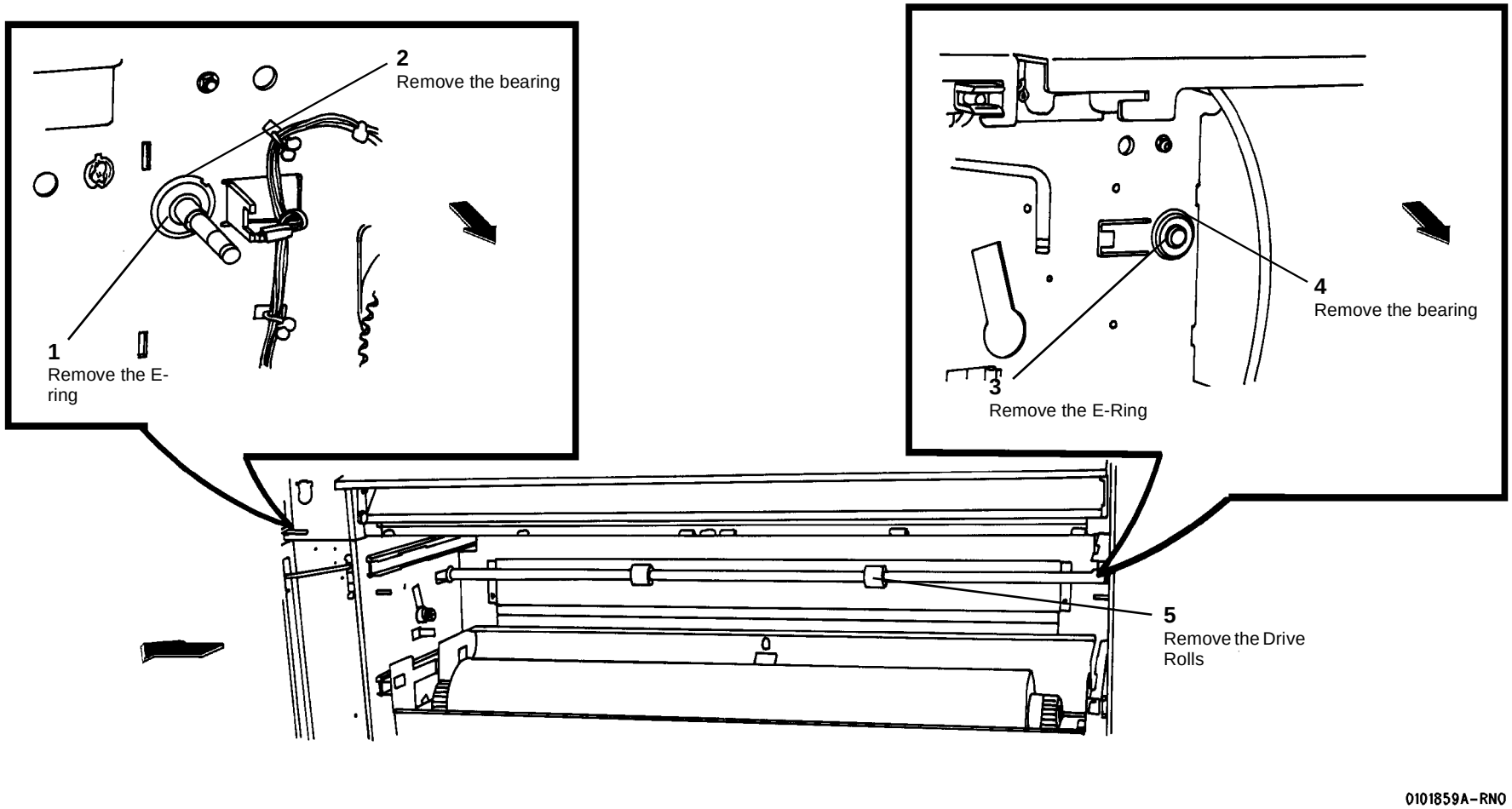


**Figure 1 Removing the Roll Feed Drive Rolls**

# REP 7.5 Feed Clutch

**Parts List on PL 7.2**

**WARNING**

**Switch off the Main Power Switch. Disconnect the Power Cord.**

## Removal

1. Loosen the screws and open the Rear Door.
2. (Figure 1): Remove the Feed Clutch.

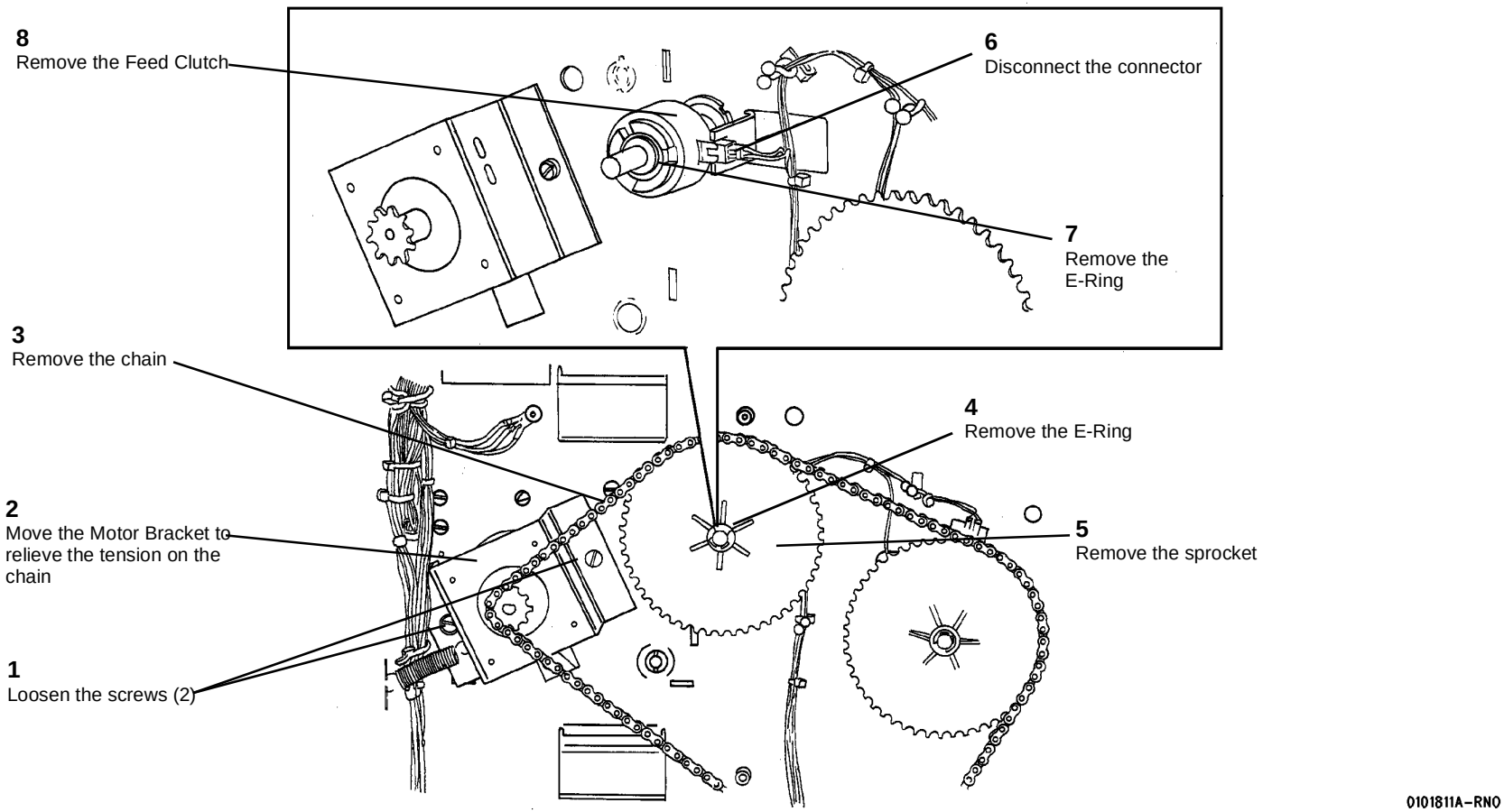


**Figure 1 Removing the Feed Clutch**

# REP 7.6 Rewind Clutch

**Parts List on PL 7.2**

**WARNING**

**Switch off the Main Power Switch. Disconnect the Power Cord.**

## Removal

1. Loosen the screws and open the Rear Door.
2. (Figure 1): Remove the Rewind Clutch.

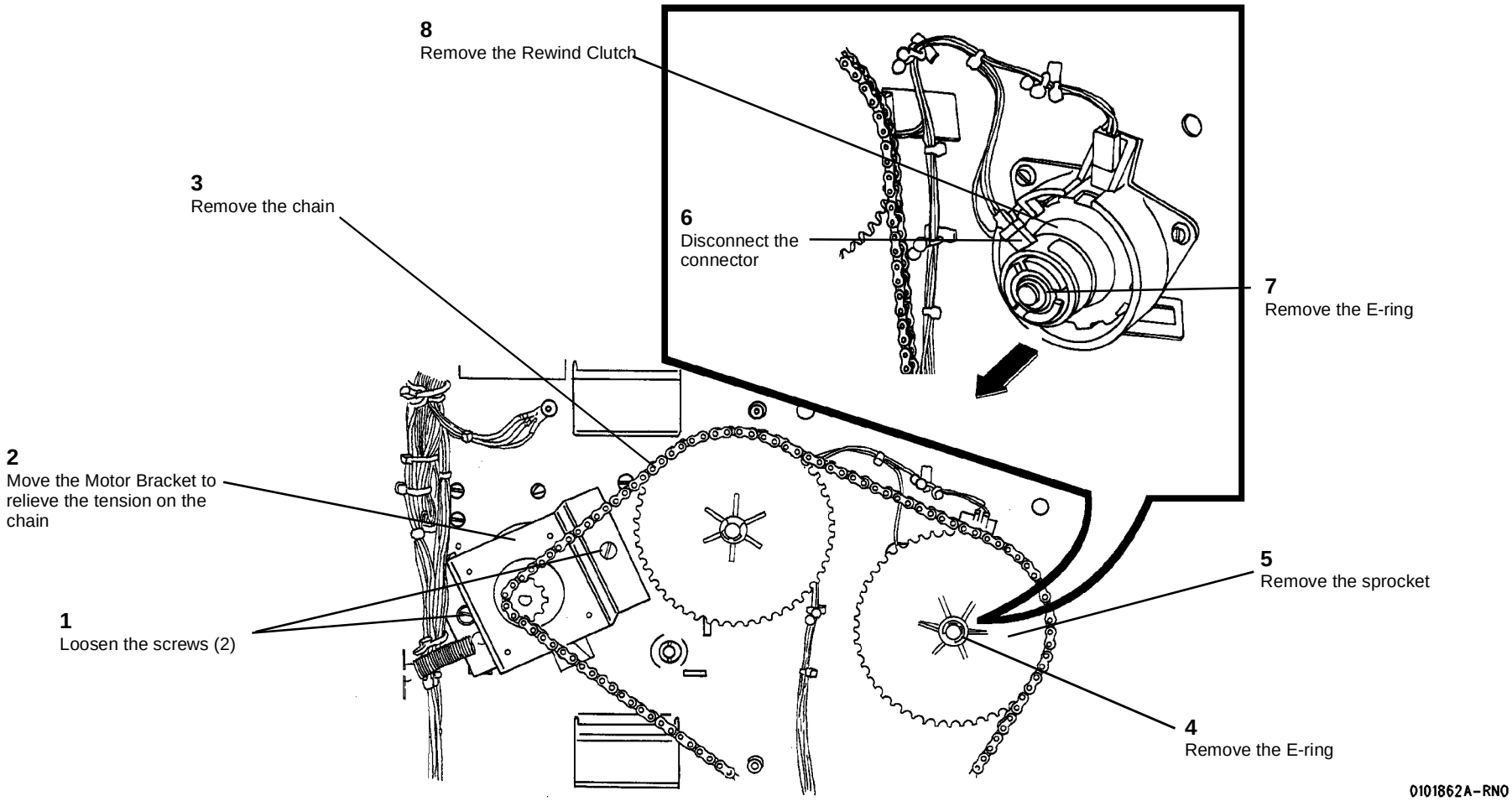


**Figure 1 Removing the Rewind Clutch**

# REP 7.7 Motion Sensor

**Parts List on PL 7.2**

**WARNING**

**Switch off the Main Power Switch. Disconnect the Power Cord.**

## Removal

1. Loosen the screws and open the Rear Door.
2. Remove the Rewind Clutch (REP 7.6).
3. (Figure 1): Remove the Motion Sensor.

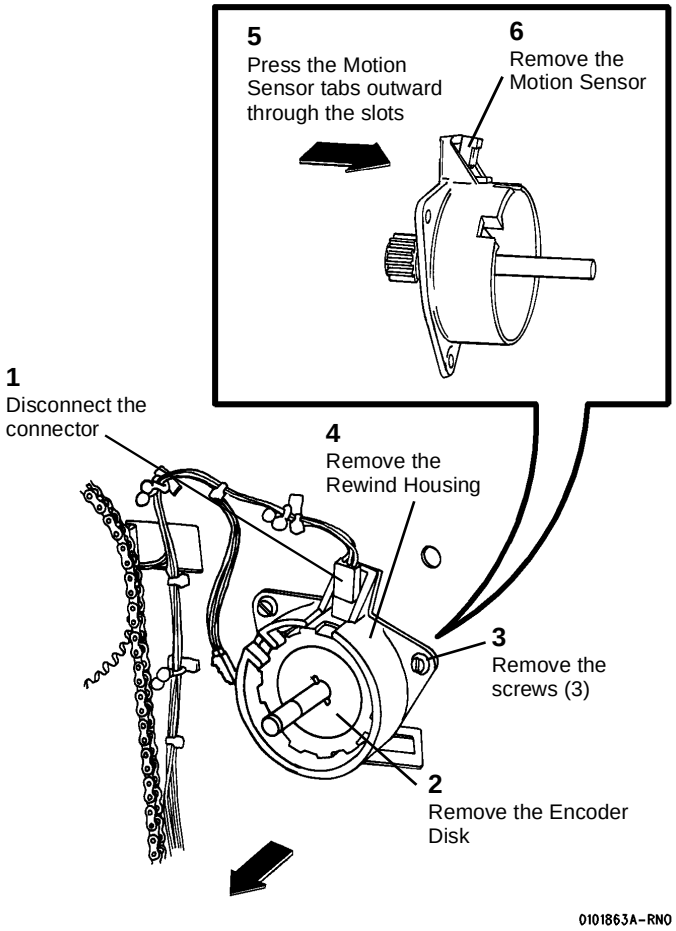


**Figure 1 Removing the Motion Sensor**

## Replacement

1. Reinstall the Motion Sensor and the Rewind Housing.
2. (Figure 2): Reinstall the Encoder Disk.

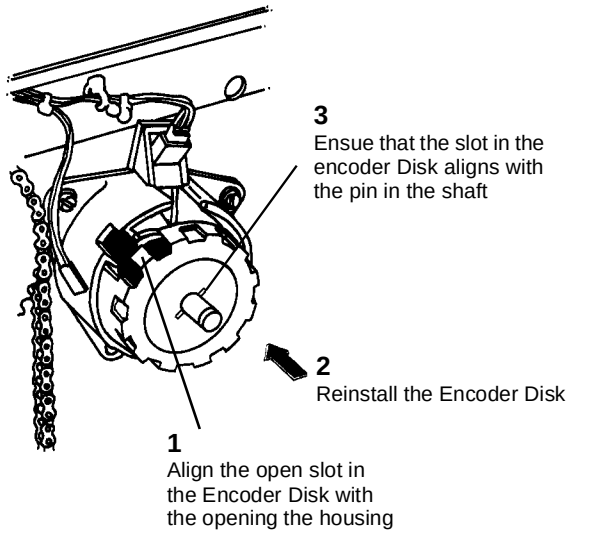


**Figure 2 Reinstalling the Encoder Disk**

# REP 7.9 Roll Drive Motor

**Parts List on PL 7.2**

**WARNING**

**Switch off the Main Power Switch. Disconnect the Power Cord.**

## Removal

1. Loosen the screws and open the Rear Door.

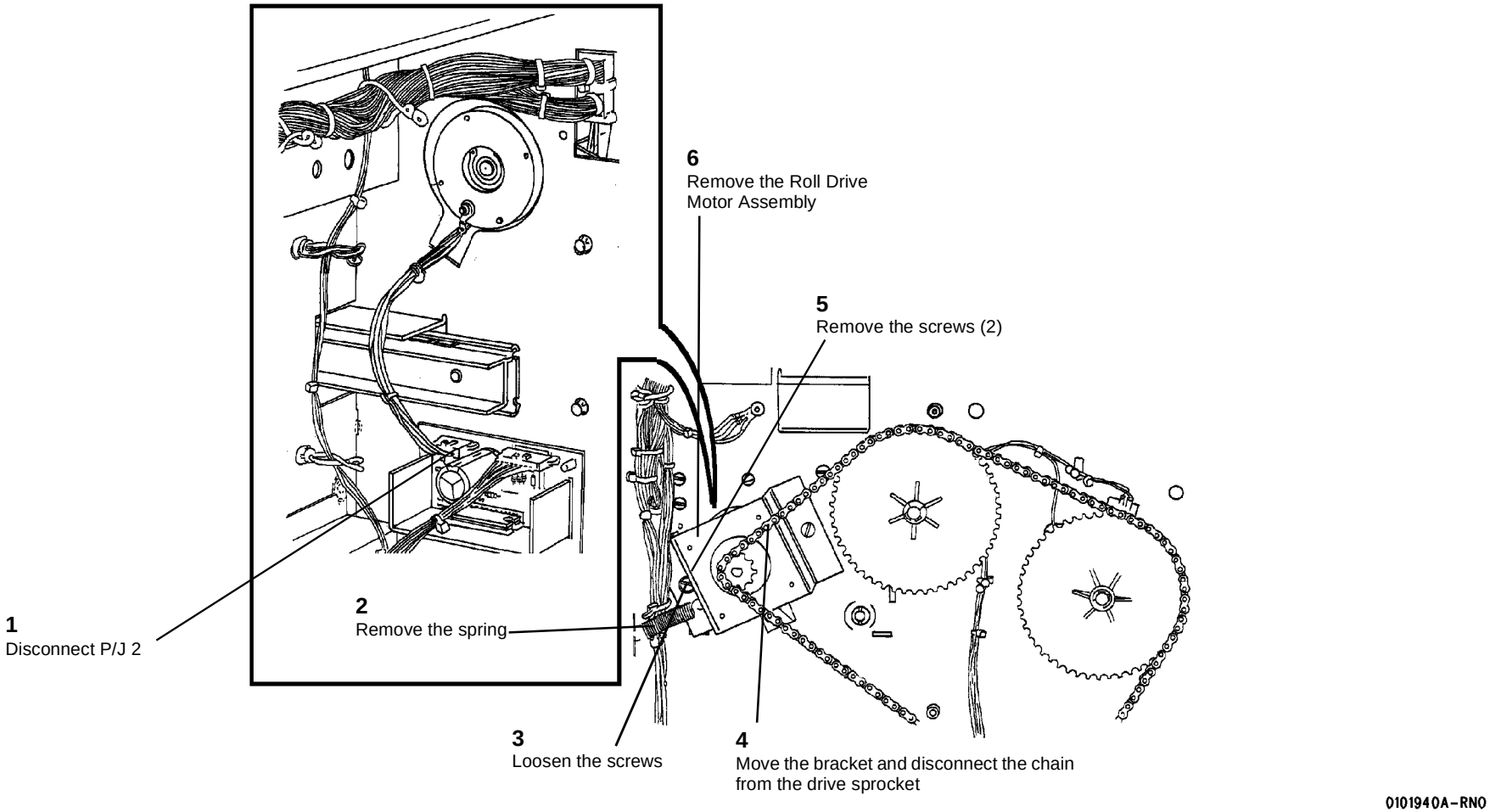


**Figure 1 Removing the Roll Drive Assembly**

2. (Figure 1): Remove the Roll Drive Motor Assembly.

3. (Figure 2): Remove the bracket from the Roll Drive Motor.

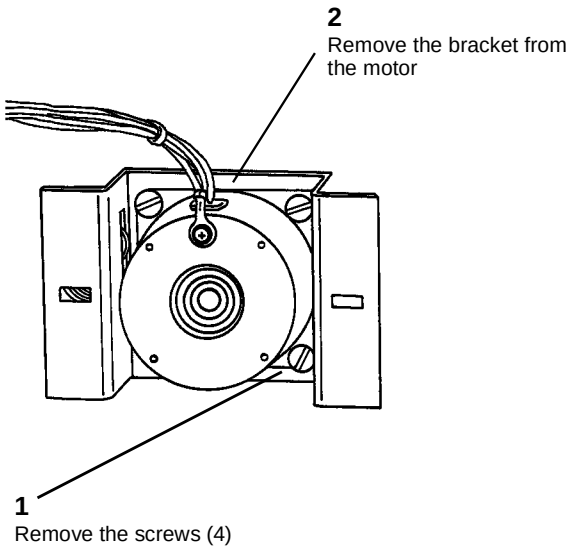


**Figure 2 Removing the Roll Drive Motor Bracket**

# REP 7.10A Lower Media Roll Heater

## Parts List on PL 7.2

**WARNING**

**Switch off the Main Power Switch. Disconnect the Power Cord.**

## Removal

1. Loosen the screws and open the Rear Door.

2. (Figure 1): Remove the Lower Media Roll Heater.

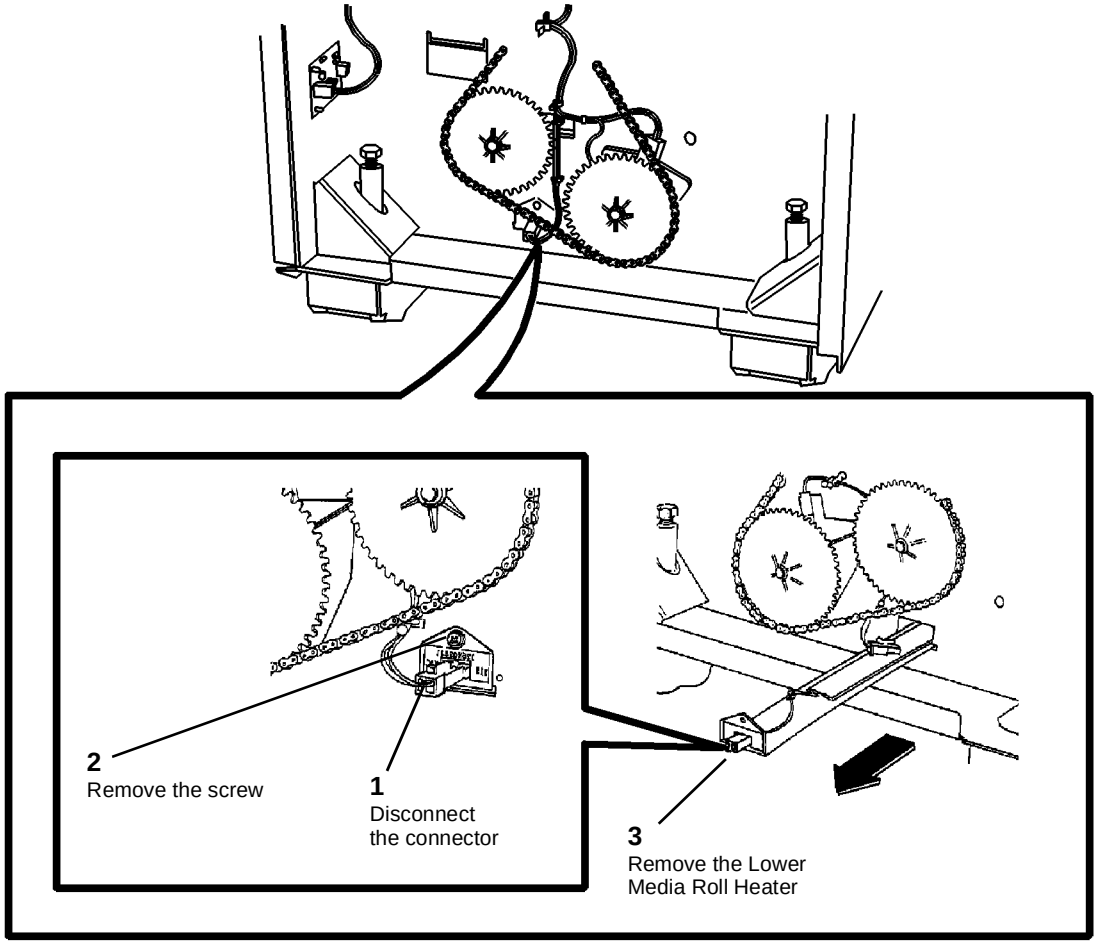


**Figure 1 Removing the Lower Media Roll Heater**

# REP 7.10B Upper Media Roll Heater

**Parts List on PL 7.2**

**WARNING**

**Switch off the Main Power Switch. Disconnect the Power Cord.**

## Removal

1. Remove Media Supply Drawer 1 (REP 7.1).

**CAUTION**

*Be sure to support the Media Roll Heater/Guard with your hand while removing the mounting screws in the next step.*

2. (Figure 1): Remove the Upper Media Roll Heater.

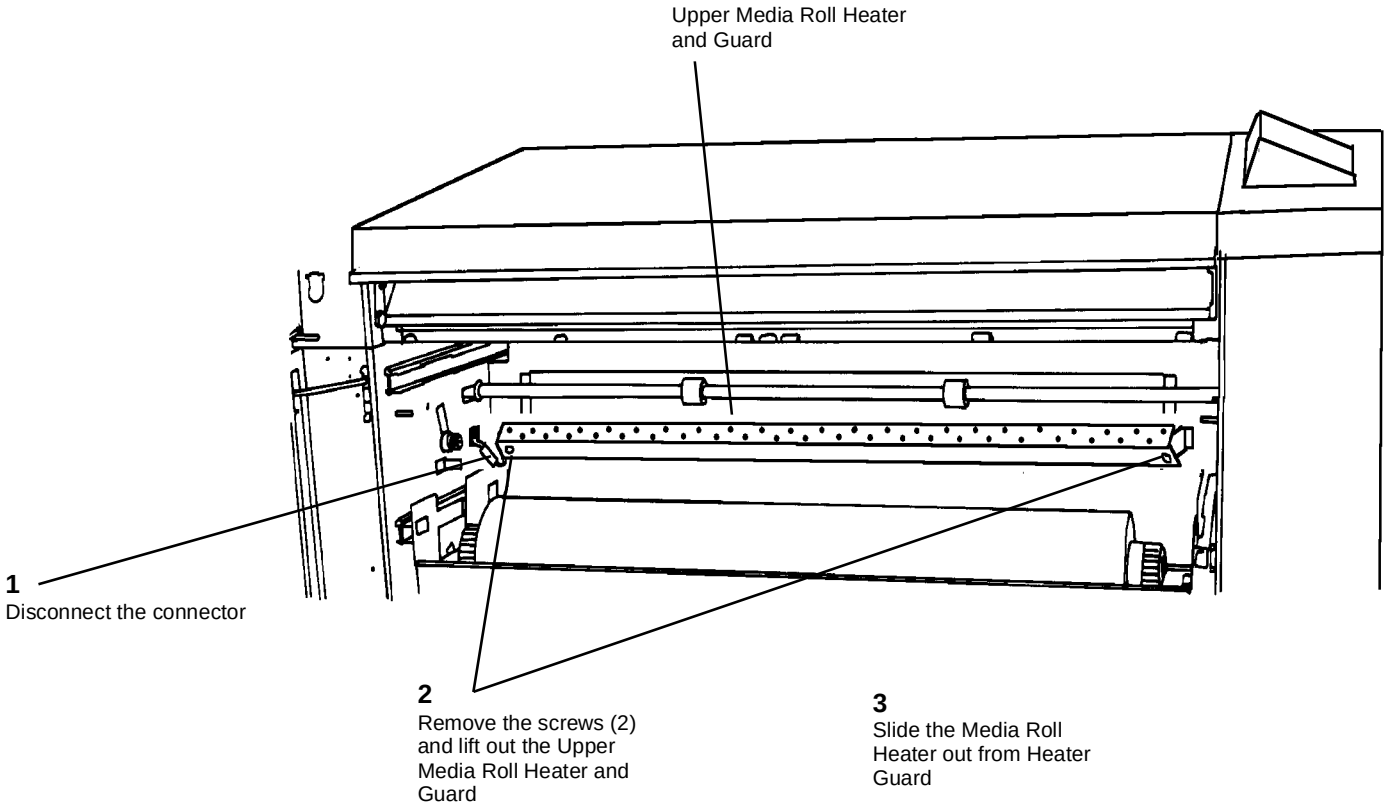


**Figure 1 Removing the Upper Media Roll Heater**

# REP 7.11 Encoder Disk

**WARNING**

**Switch off the Main Power Switch. Disconnect the Power Cord.**

## Removal

1. Loosen the screws and open the Rear Door.
2. Remove the Rewind Clutch (REP 7.6).
3. (Figure 1): Remove the Encoder Disk.

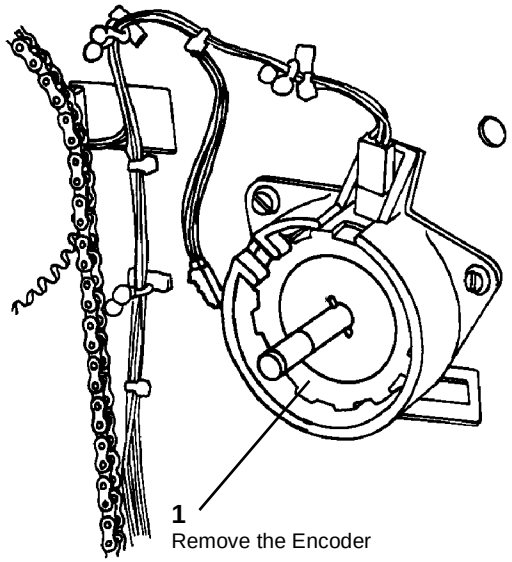


**Figure 1 Removing the Encoder Disk**

## Replacement

1. Reinstall the Motion Sensor and the Rewind Housing.
2. (Figure 2): Reinstall the Encoder Disk.

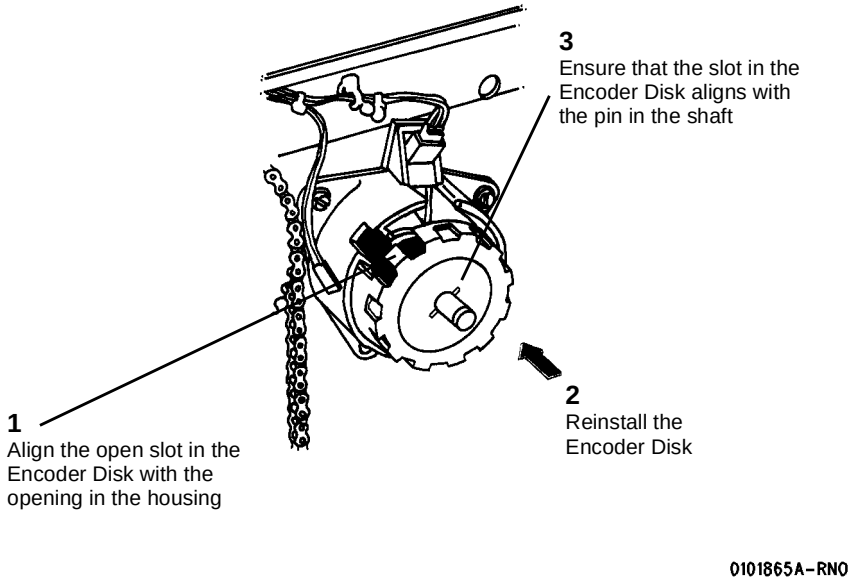


**Figure 2 Reinstalling the Encoder Disk**

# REP 8.1 Media Transport Assembly

## Parts List on PL 8.1

**WARNING**

**Switch off the Main Power Switch. Disconnect the Power Cord.**

***NOTE:*** *The art used for this procedure was developed for previous products and may not match the 8825/8830 configuration exactly.*

## Removal

1. Latch the Xerographic Module at the Service Position (REP 9.2).
2. Open the Cutter Drawer.
3. (Figure 1): Disconnect the connectors at the rear of the printer.

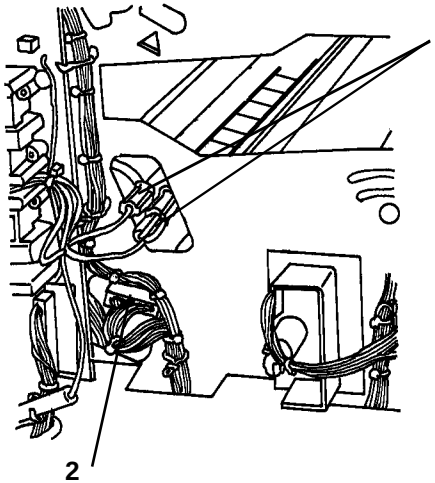


**Figure 1 Disconnecting the Connectors**

4. (Figure 2): Disconnect the Moisture Collection Tube.

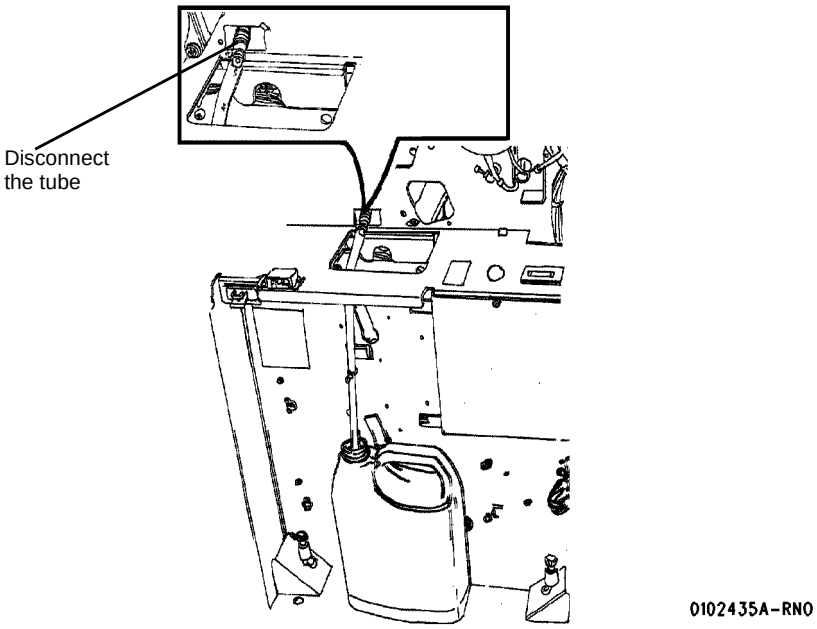


**Figure 2 Disconnecting the Moisture Collection Tube**

5. (Figure 3): Remove the Media Transport Assembly.

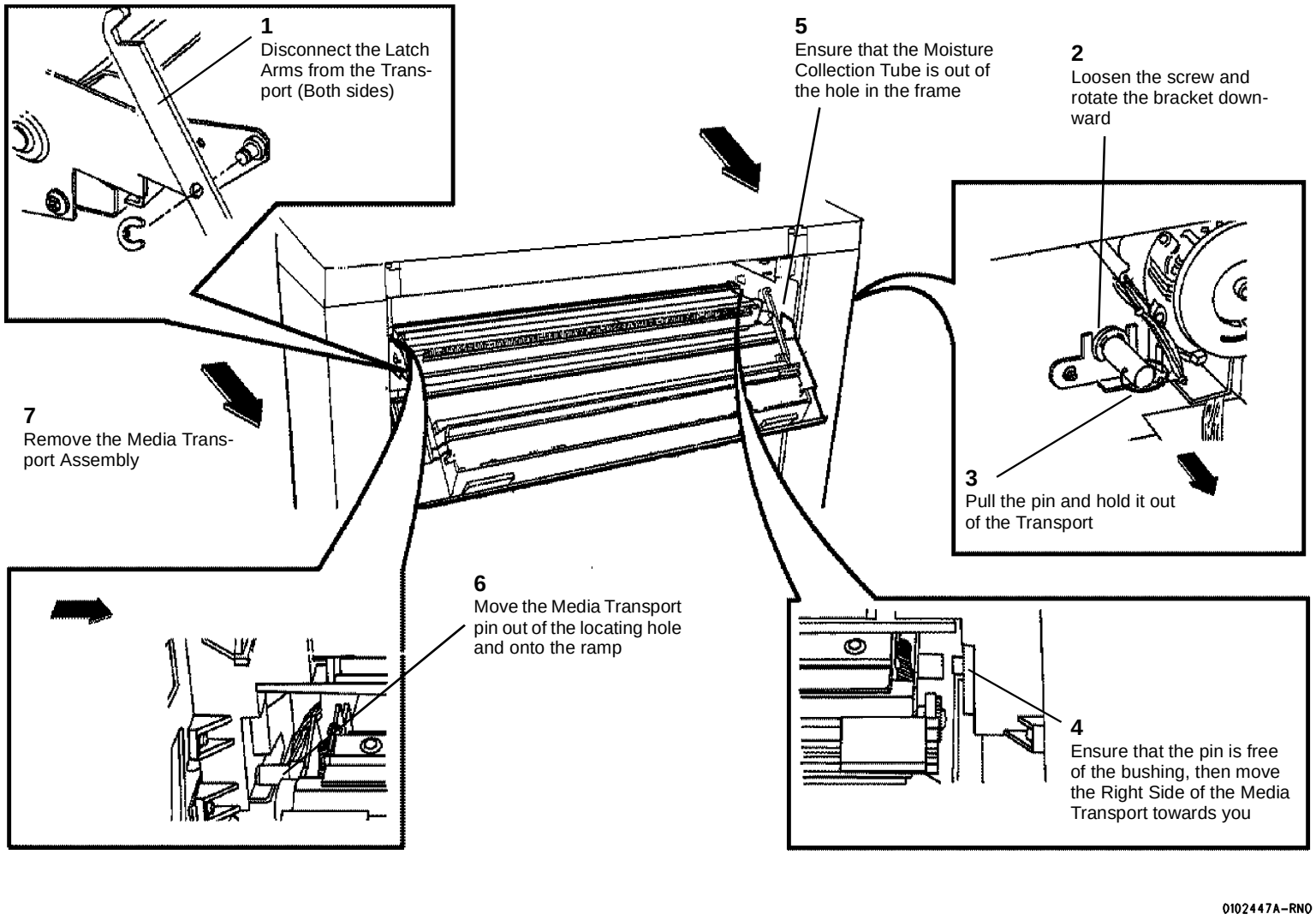


**Figure 3 Removing the Media Transport Assembly**

## Replacement

1. If a new Media Transport Assembly is being installed, perform the Media Transport to Drum Spacing (ADJ 8.4).
2. Open the Cutter Drawer.

3. (Figure 4): Reinstall the Media Transport Assembly.

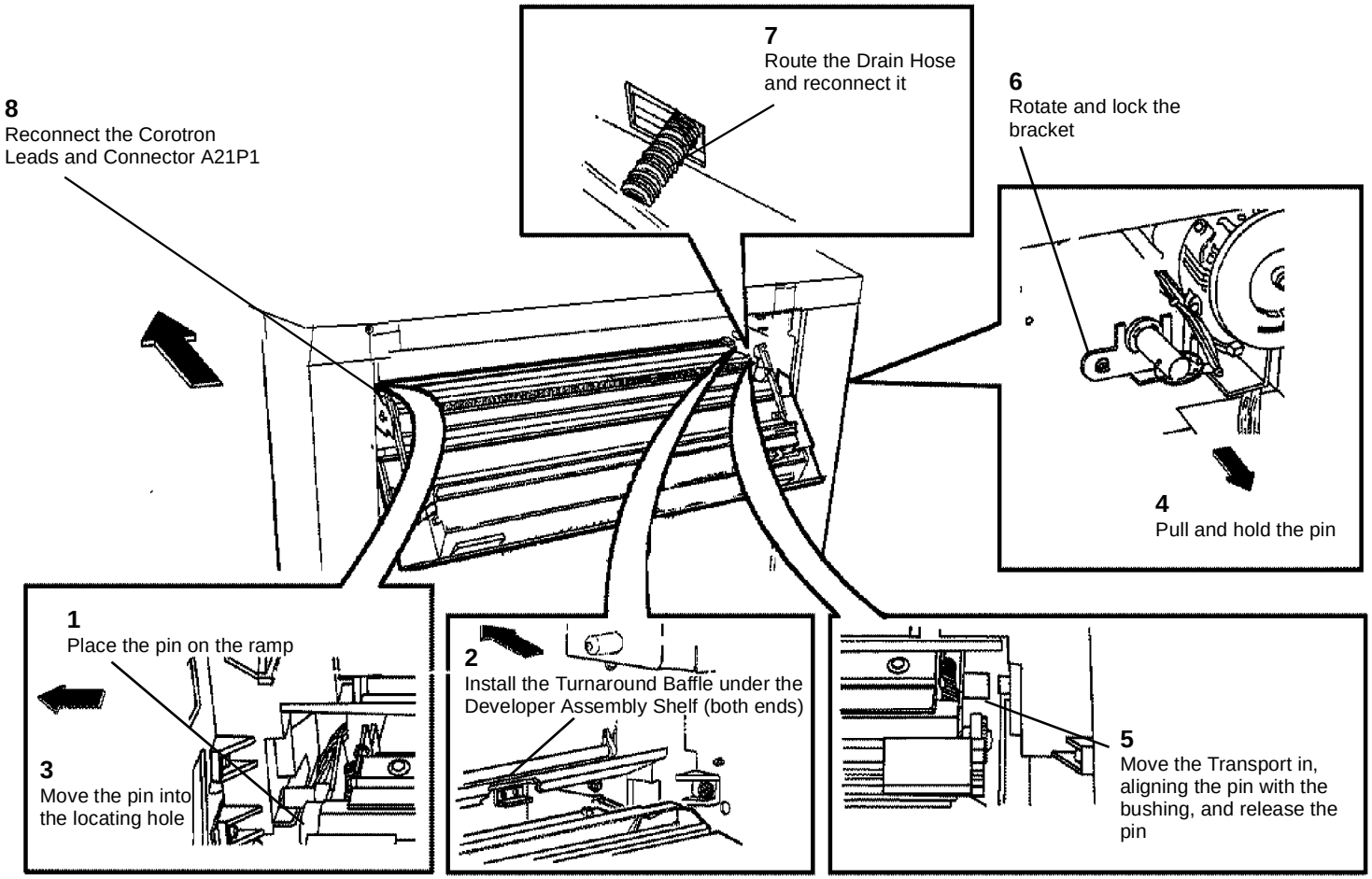


**Figure 4 Reinstalling the Media Transport Assembly**

# REP 8.2 Media Exit Switch

**Parts List on PL 8.4**

**WARNING**

**Switch off the Main Power Switch. Disconnect the Power Cord.**

## Removal

1. Latch the Xerographic Module at the Service Position (REP 9.2).
2. Remove the Media Transport Assembly (REP 8.1).
3. Remove the Fabric Guide (REP 8.9).
4. (Figure 1): Remove the Front Pivot Assembly.
5. Turn the Front Pivot Assembly over and remove the Media Exit Switch.
   a. Disconnect the Switch Assembly Connector Q3.
   b. Remove the screw and the Stacker Support.
   c. Remove the Media Exit Switch from the bracket.

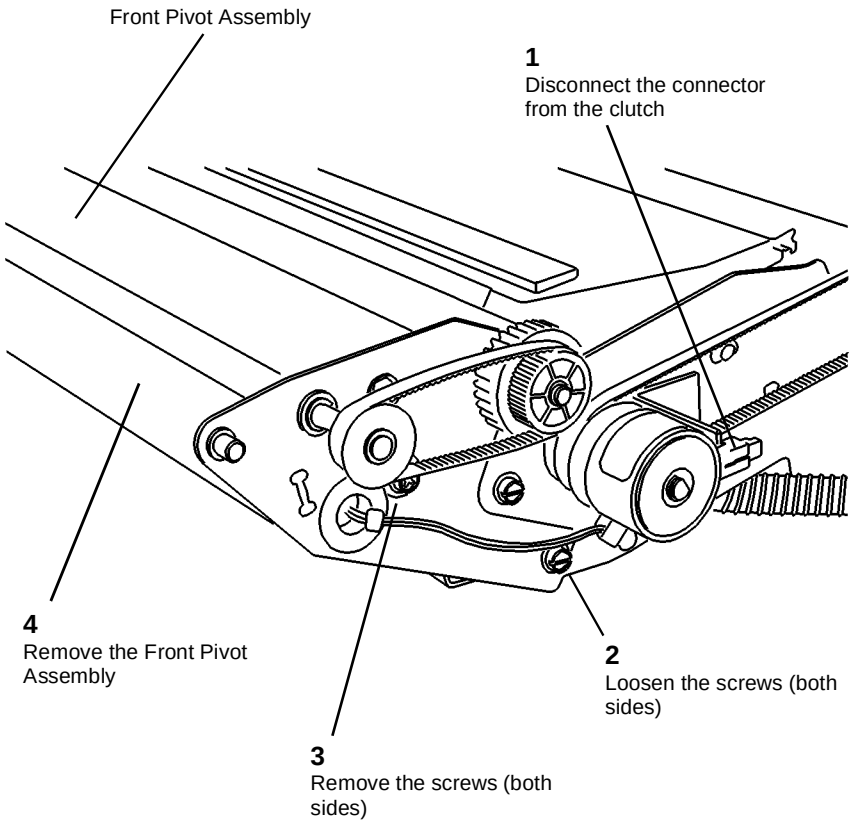


**Figure 1 Removing the Front Pivot Assembly**

# REP 8.3 Buckle Switch

**Parts List on PL 8.4**

**WARNING**

**Switch off the Main Power Switch. Disconnect the Power Cord.**

## Removal

1. Latch the Xerographic Module at the Service Position (REP 9.2).
2. Remove the Media Transport Assembly (REP 8.1).
3. Remove the Fabric Guide (REP 8.9).
4. Remove the Pressure Plates (REP 8.5).
5. (Figure 1): Remove the Buckle Switch.
   a. Remove the screw.
   b. Carefully pull the Buckle Switch Assembly until the connector can be disconnected.
   c. Disconnect the connector.
   d. Remove the Buckle Switch from the bracket.

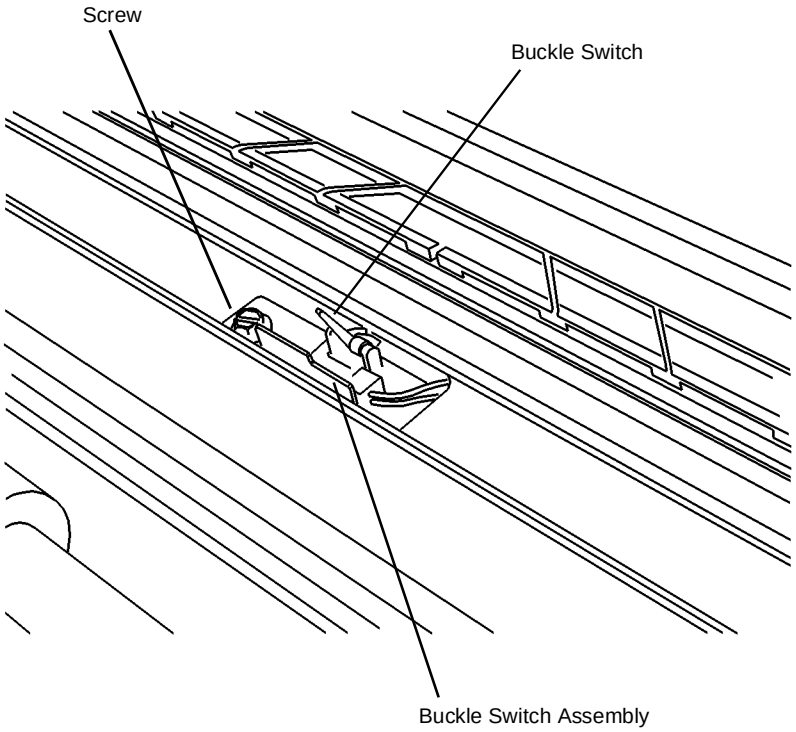


0103026A-RNO

**Figure 1 Removing the Buckle Switch**

# REP 8.4 Cut Sheet Media Feed Clutch - 8830 and 8825 with Tag/MOD 90

**Parts List on PL 8.1**

**WARNING**

**Switch off the Main Power Switch. Disconnect the Power Cord.**

## Removal

1. Latch the Xerographic Module at the Service Position (REP 9.2).
2. Remove the Media Transport Assembly (REP 8.1).
3. (Figure 1): Remove the Cut Sheet Media Feed Clutch.

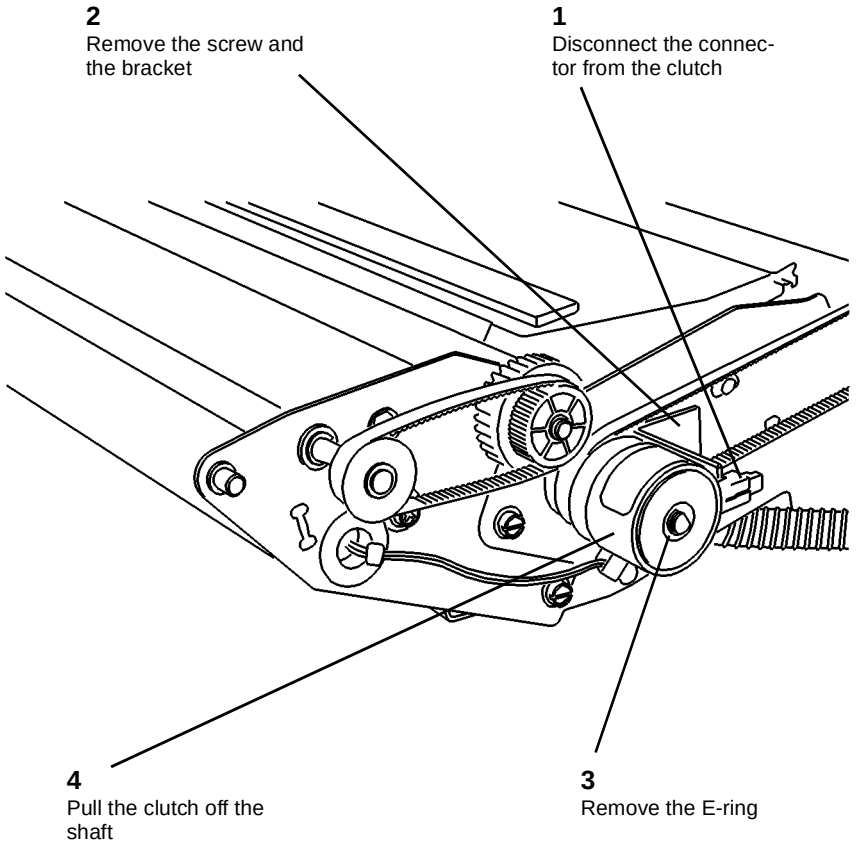


**Figure 1 Removing the Cut Sheet Media Feed Clutch**

# REP 8.5 Pressure Plates

**Parts List on PL 10.3**

**WARNING**

**Switch off the Main Power Switch. Disconnect the Power Cord.**

***NOTE:*** *The art used for this procedure was developed for previous products and may not match the 8825/8830 configuration exactly.*

## Removal

1. Latch the Xerographic Module at the Service Position (REP 9.2).
2. Remove the Media Transport Assembly (REP 8.1).
3. Remove the Fabric Guide (REP 8.9).

**CAUTION**

*Be sure to push the Buckle Switch Actuator down while starting to remove the Upper Pressure Plate in order to prevent damage to the actuator.*

4. (Figure 1): Remove the Upper and Lower Pressure Plates.

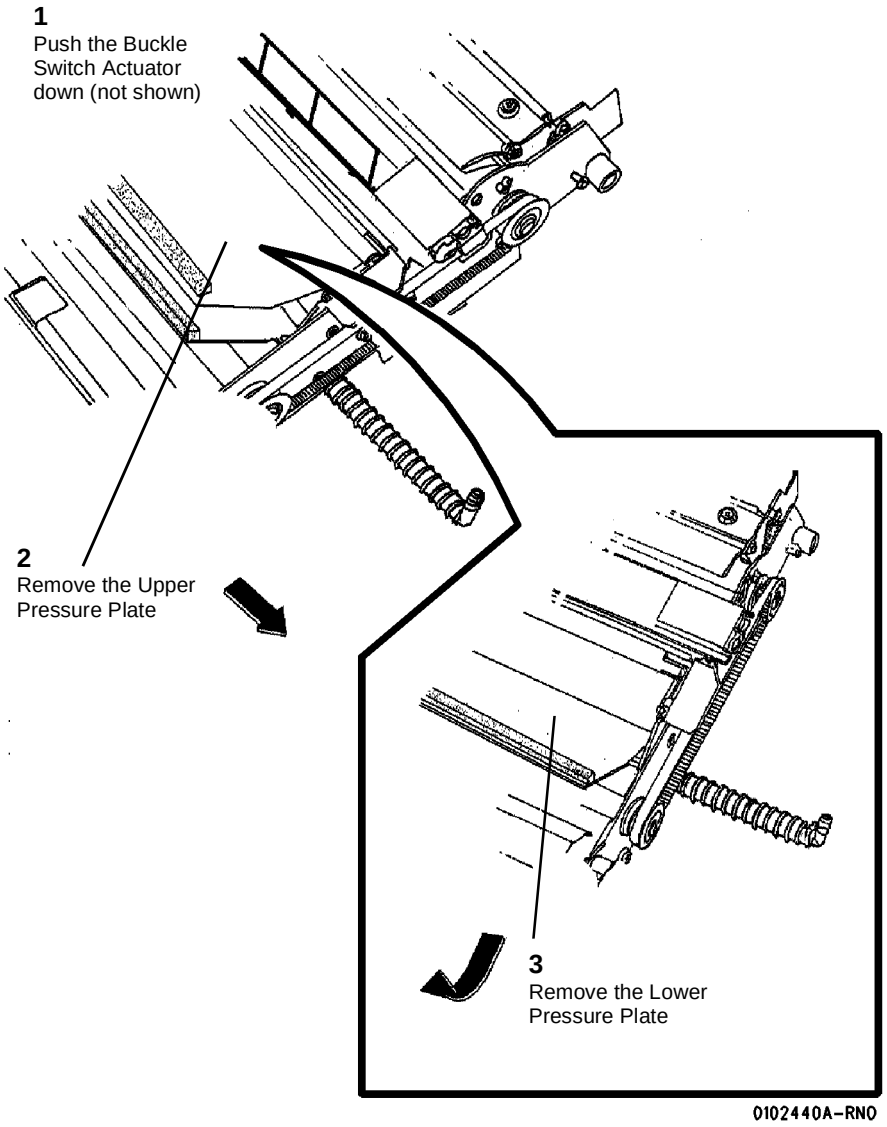


**Figure 1 Removing the Pressure PLates**

## Replacement

**CAUTION**

*Be careful not to damage the Sheet Media Switch Actuator while reinstalling the Lower Pressure Plate.*

1. (Figure 2): Reinstall the Lower Pressure Plate.

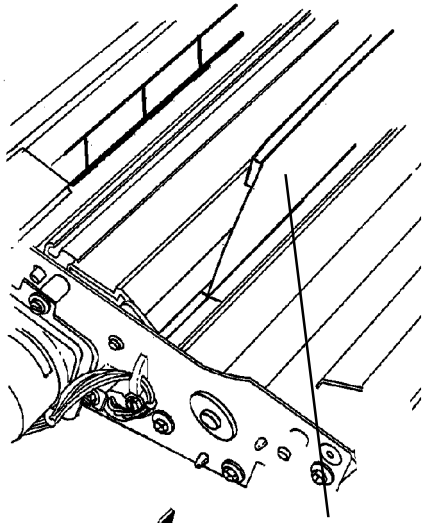


**Figure 2 Reinstalling the Lower Pressure Plate**

**CAUTION**

*Be sure to push the Buckle Switch Actuator down while reinstalling the Upper Pressure Plate in order to prevent damage to the actuator.*

2. (Figure 3): Reinstall the Upper Pressure Plate.

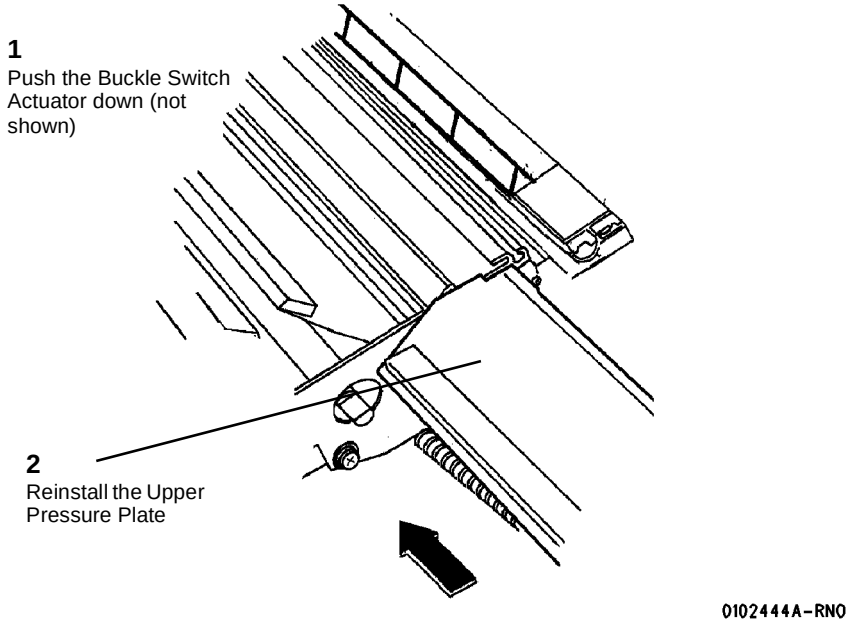


**Figure 3 Reinstalling the Upper Pressure Plate**

# REP 8.6 Sheet Drive Roll - 8830 and 8825 with Tag/MOD 90

**Parts List on PL 8.3**

**WARNING**

**Switch off the Main Power Switch. Disconnect the Power Cord.**

***NOTE:*** *The art used for this procedure was developed for previous products and may not match the 8825\8830 configuration exactly.*

## Removal

1. Latch the Xerographic Module at the Service Position (REP 9.2).
2. Remove the Media Transport Assembly (REP 8.1).
3. Remove the Fabric Guide (REP 8.9).
4. Remove the Pressure Plates (REP 8.5).
5. Remove the Cut Sheet Media Feed Clutch (REP 8.4).
6. (Figure 1): Remove the Timing Belt and the bearings.
7. (Figure 2): Remove the Sheet Drive Roll.

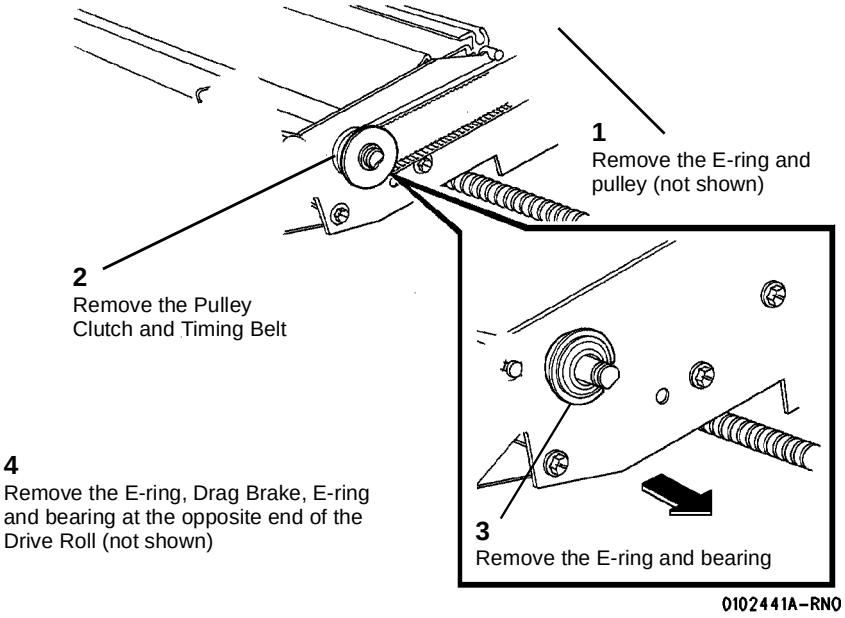


**Figure 1 Removing the Bearings**

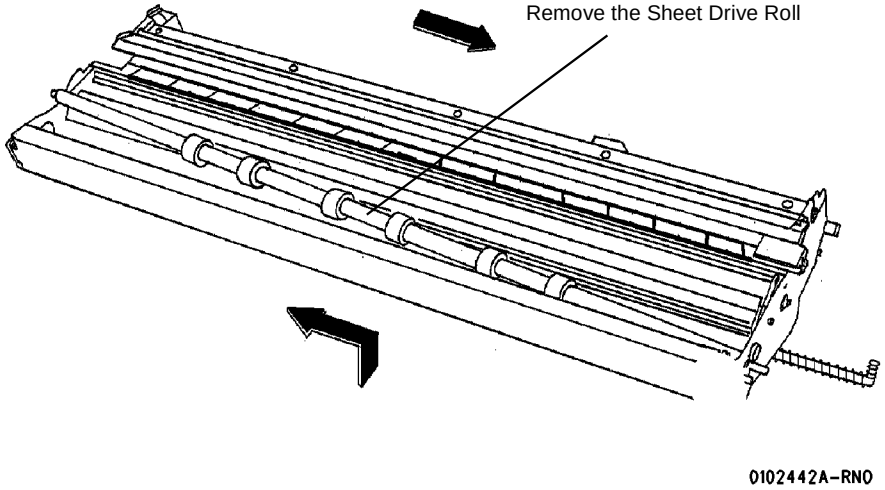


**Figure 2 Removing the Sheet Drive Roll**

# REP 8.7 Sheet Pinch Rolls - 8830 and 8825 with Tag/MOD 90

**Parts List on PL 8.3**

**WARNING**

**Switch off the Main Power Switch. Disconnect the Power Cord.**

***NOTE:*** *The art used for this procedure was developed for previous products and may not match the 8825/8830 configuration exactly.*

## Removal

1. Latch the Xerographic Module at the Service Position (REP 9.2).
2. Remove the Media Transport Assembly (REP 8.1).
3. Remove the Fabric Guide (REP 8.9).
4. Remove the Pressure Plates (REP 8.5).
5. Turn the Media Transport over.
6. (Figure 1): Remove the Sheet Pinch Rolls.

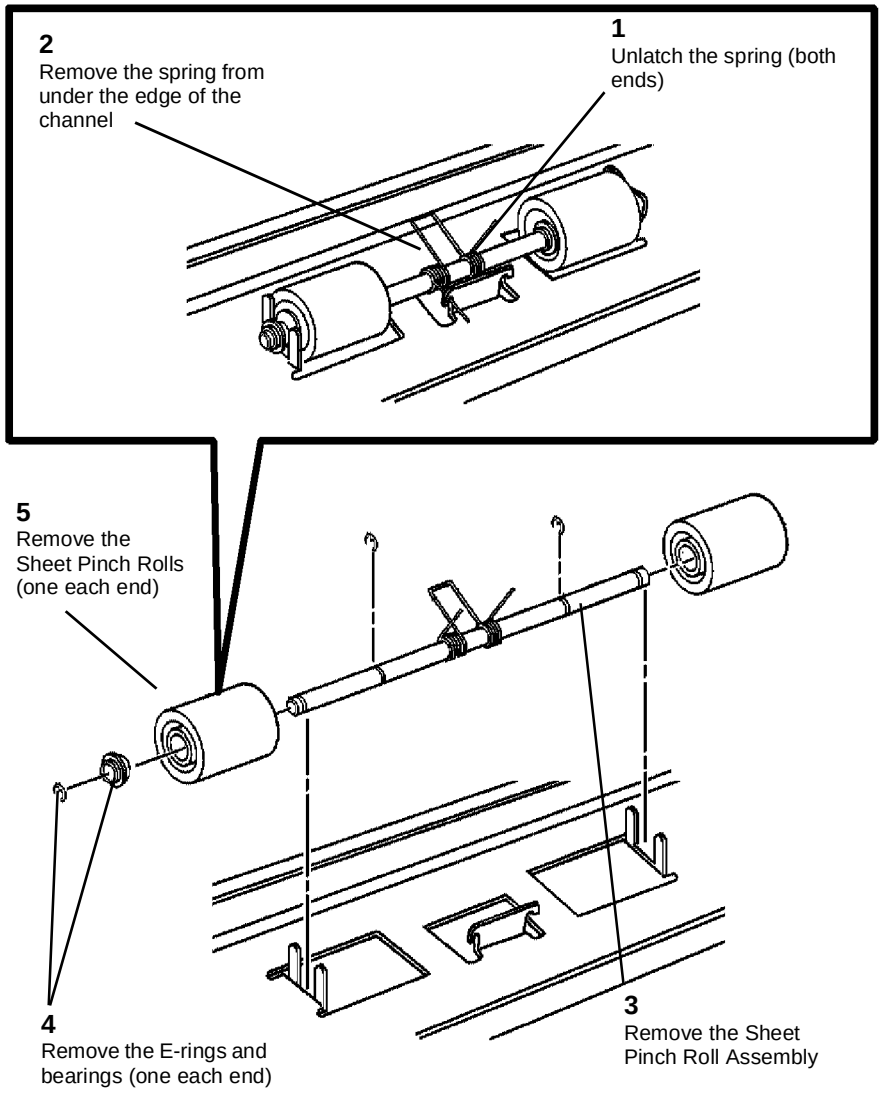


**Figure 1 Removing the Sheet Pinch Rolls**

# REP 8.8 Media Registration Sensor

**Parts List on PL 8.2**

## WARNING

**Switch off the Main Power Switch. Disconnect the Power Cord.**

***NOTE:*** *The art used for this procedure was developed for previous products and may not match the 8825/8830 configuration exactly.*

## Removal

1. Latch the Xerographic Module at the Service Position (REP 9.2).
2. Remove the Media Transport Assembly (REP 8.1).
3. (Figure 1): Remove the Media Registration Sensor.

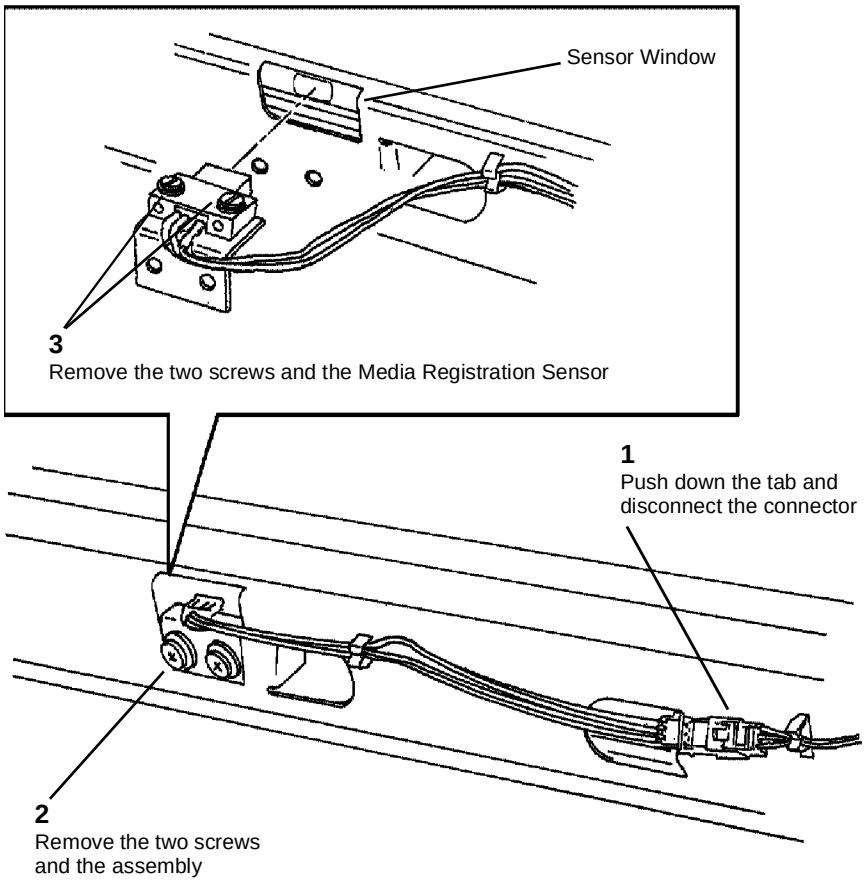


**Figure 1 Removing the Media Registration Sensor**

# REP 8.9 Fabric Guide

**Parts List on PL 10.3**

**WARNING**

**Switch off the Main Power Switch. Disconnect the Power Cord.**

***NOTE:*** *The art used for this procedure was developed for previous products and may not match the 8825/8830 configuration exactly.*

## Removal

1. Lower the Media Transport Cover.
2. (Figure 1): Carefully reach into the Printer and remove the Fabric Guide.

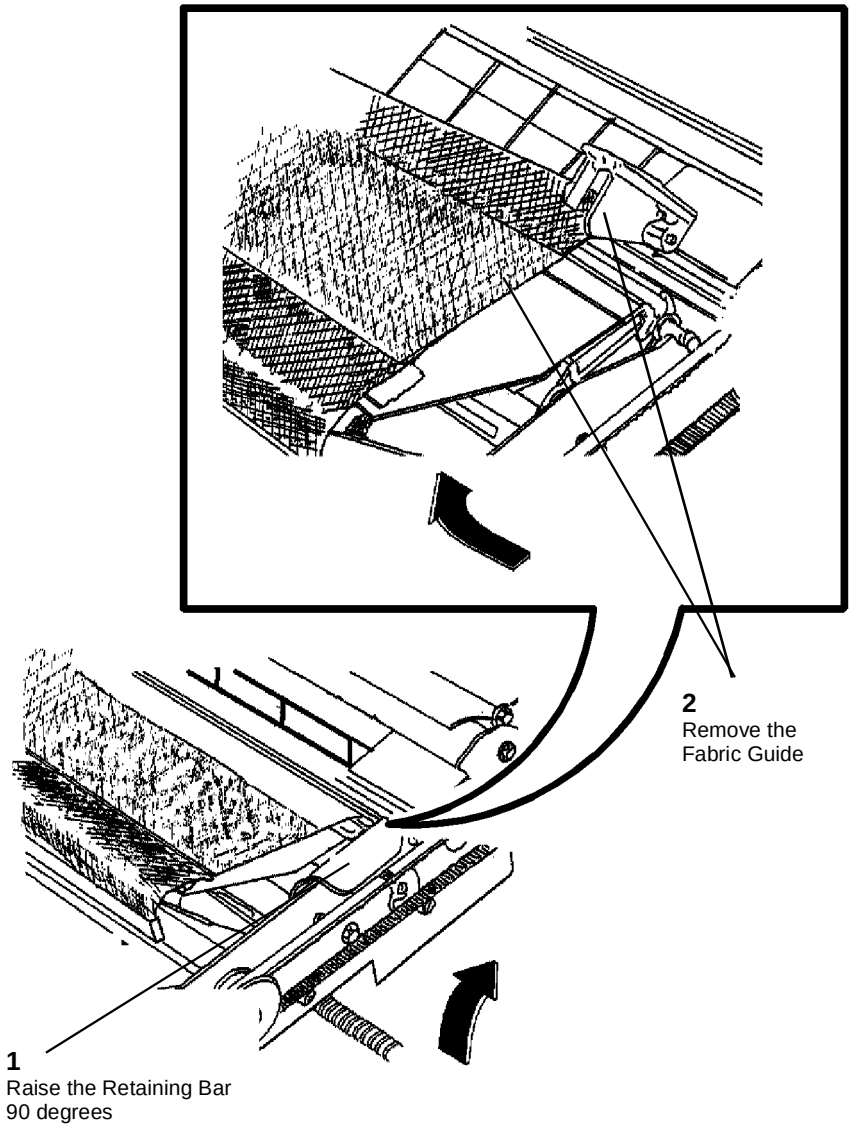


**Figure 1 Removing the Fabric Guide**

## Replacement

1. (Figure 2): Reinstall the Fabric Guide.

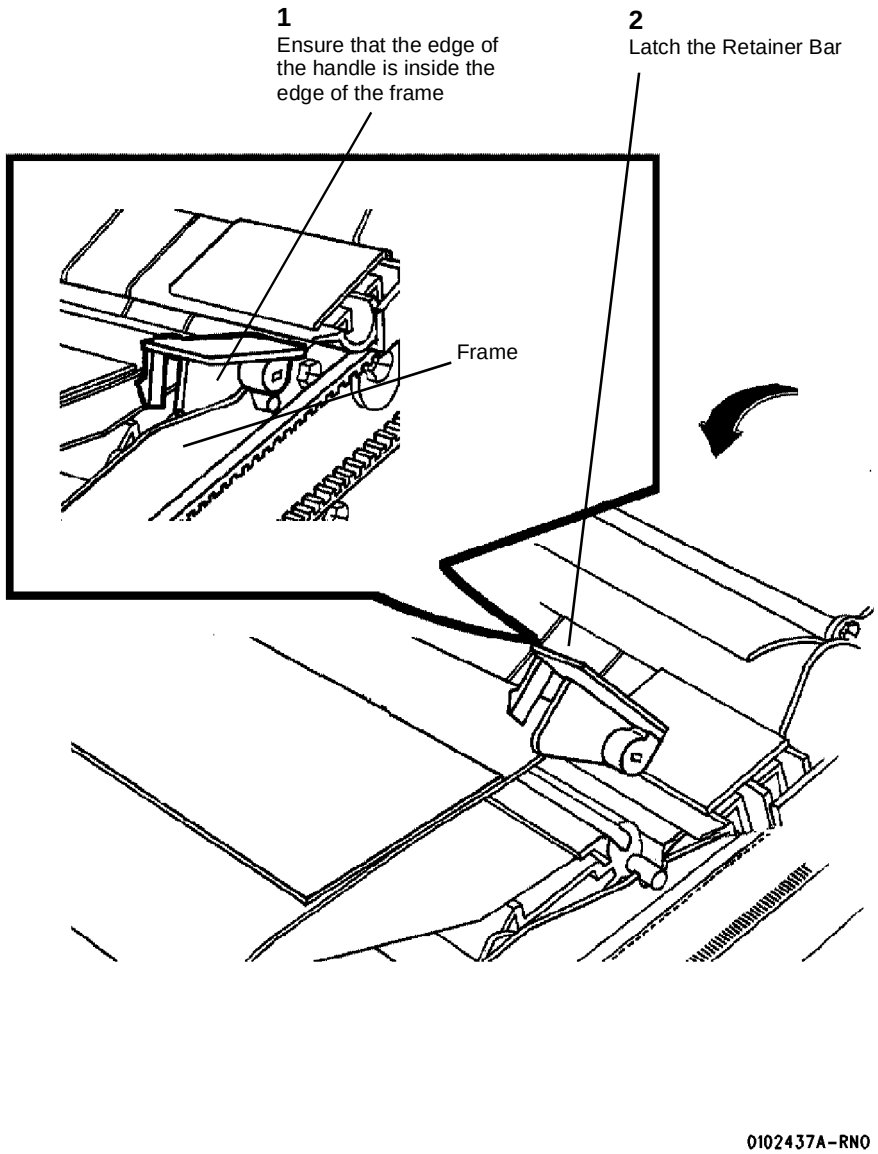


**Figure 2 Reinstalling the Fabric Guide**

# REP 8.10 Media Transport Drive Motor

**Parts List on PL 8.1**

**WARNING**

**Switch off the Main Power Switch. Disconnect the Power Cord.**

## Removal

1. Latch the Xerographic Module at the Service Position (REP 9.2).
2. Remove the Media Transport Assembly (REP 8.1).
3. Remove the Fabric Guide (REP 8.9).
4. Remove the Pressure Plates (REP 8.5).
5. Turn the Media Transport Assembly over.

6. (Figure 1): Remove the Media Transport Drive Motor Assembly.
7. (Figure 2): Remove the motor from the mounting plate.

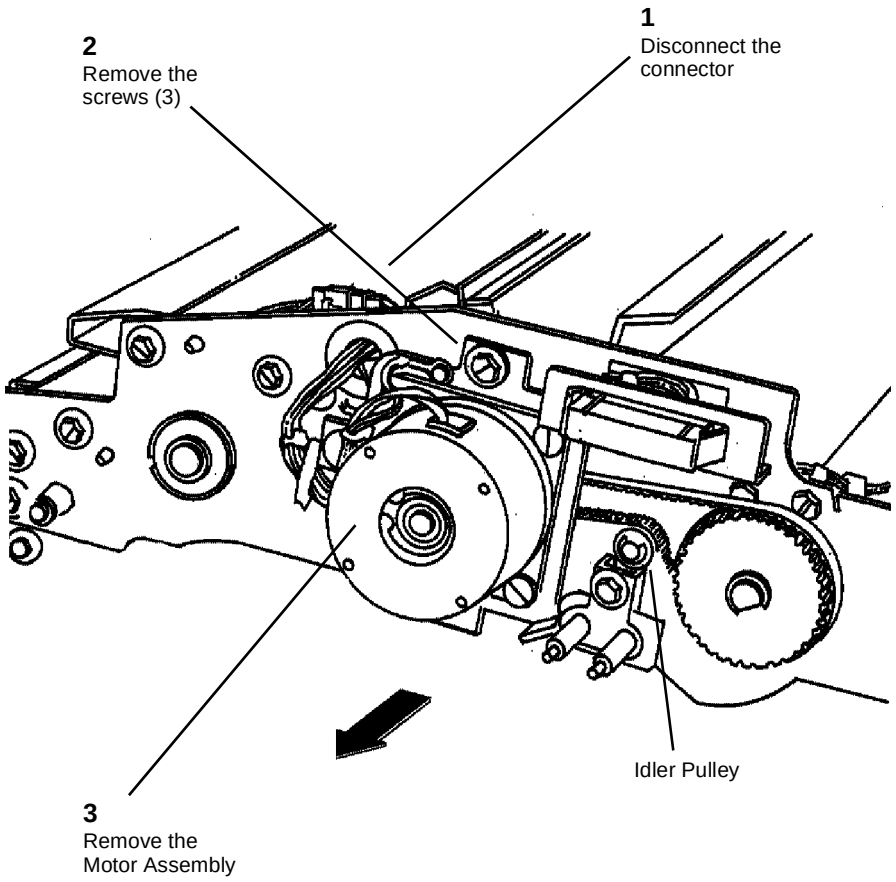


**Figure 1 Removing the Motor**

## Replacement

1. Ensure that the belt is over the Idler Pulley.
2. (Figure 2): If a new motor is being installed, use the Drive Pulley from the old assembly.

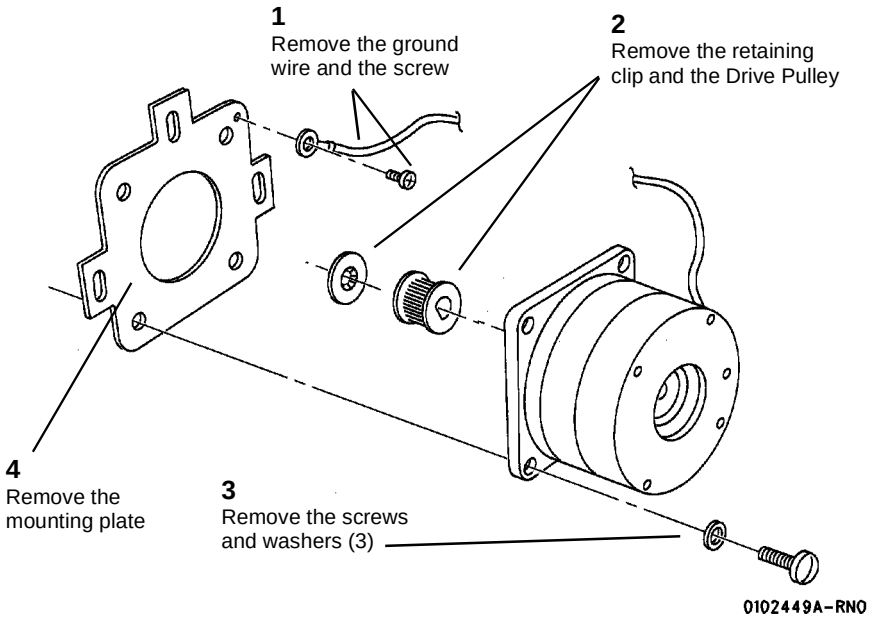


**Figure 2 Removing the Media Transport Drive Motor Assembly**

# REP 8.11 Sheet Feed Switch - 8830 and 8825 with Tag/MOD 90

**Parts List on PL 8.4**

**WARNING**

**Switch off the Main Power Switch. Disconnect the Power Cord.**

## Removal

1. Latch the Xerographic Module at the Service Position (REP 9.2).
2. Remove the Media Transport Assembly (REP 8.1).
3. Remove the Fabric Guide (REP 8.9).
4. Remove the Pressure Plates (REP 8.5).
5. Remove the Front Pivot Assembly using REP 8.2.
6. Remove the Sheet Drive Roll (REP 8.6).
7. (Figure 1): Remove the Sheet Feed Switch.

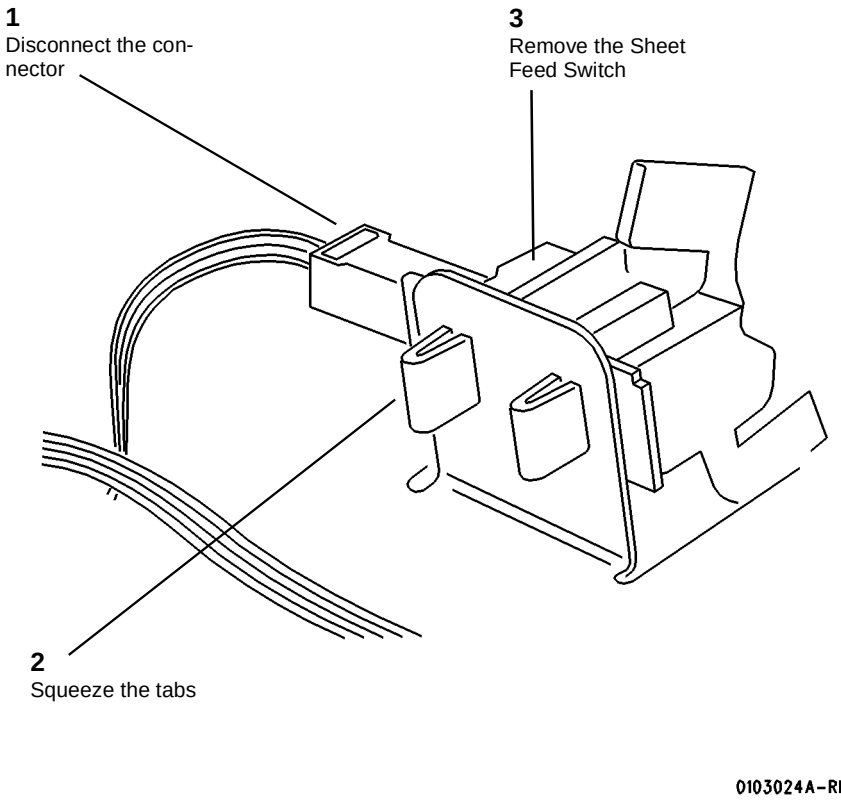


**Figure 1 Removing the Sheet Feed Switch**

# REP 8.12 Registration Pinch Rolls

**Parts List on PL 8.2**

**WARNING**

**Switch off the Main Power Switch. Disconnect the Power Cord.**

***NOTE:*** *The art used for this procedure was developed for previous products and may not match the 8825/8830 configuration exactly.*

## Removal

1. Latch the Xerographic Module at the Service Position (REP 9.2).
2. Remove the Media Transport Assembly (REP 8.1).

3. (Figure 1): Remove the Baffle.

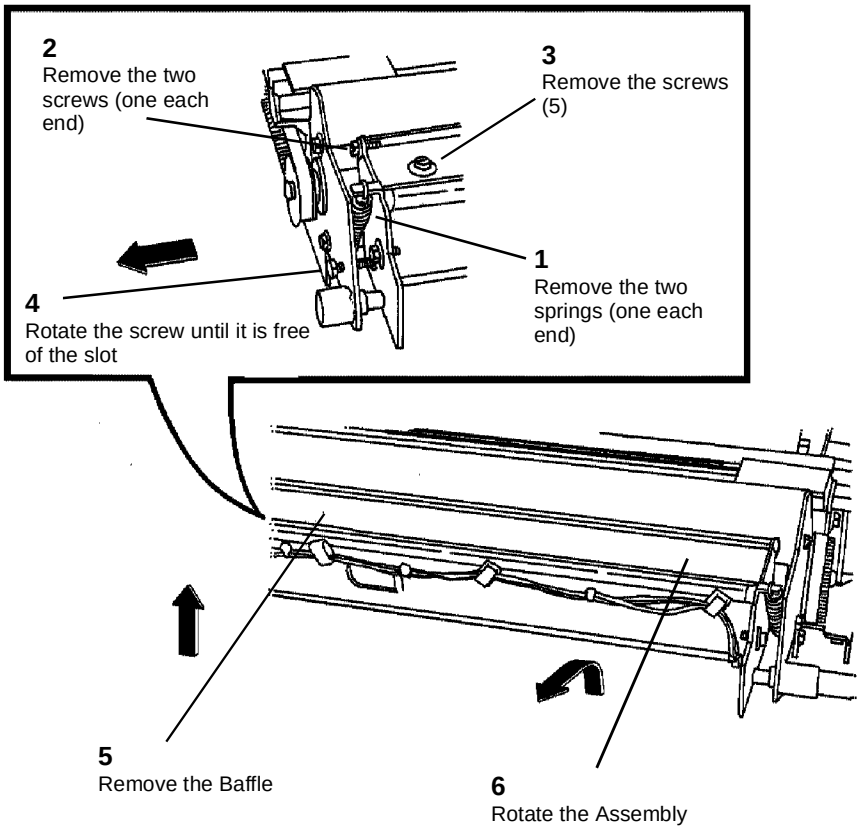


0102525A-RNO

**Figure 1 Removing the Baffle**

4. (Figure 2): Remove the Registration Pinch Rolls.

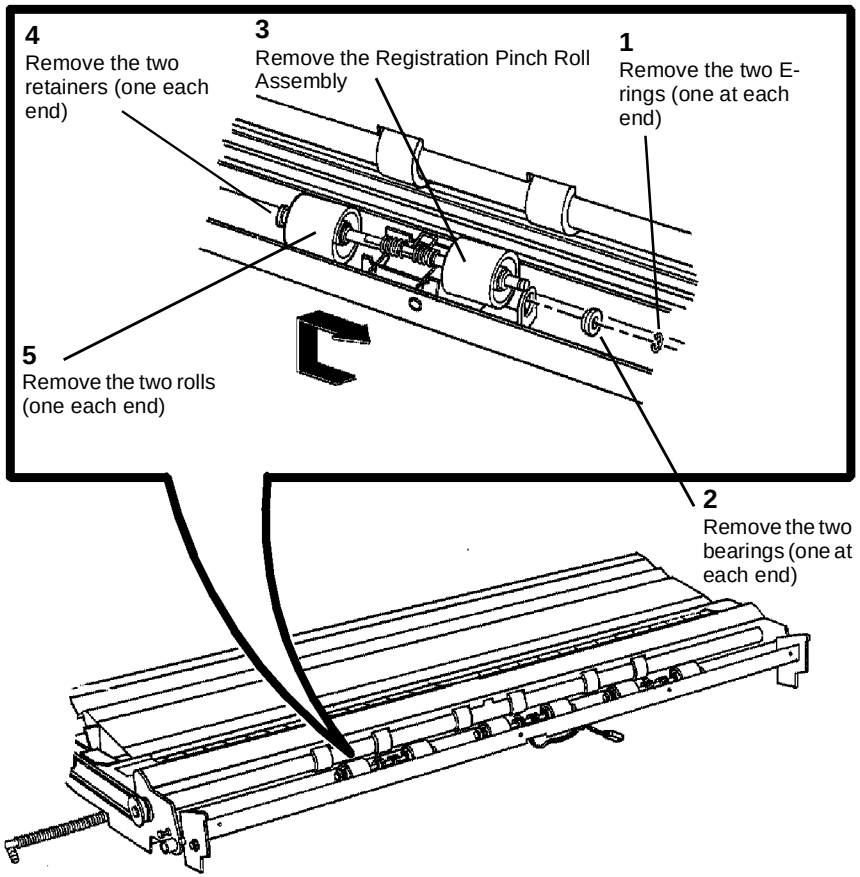


0102526A-RNO

**Figure 2 Removing the Registration Pinch Rolls**

## Replacement

1. Reinstall the rolls and retainers onto the shaft.
2. (Figure 3): Reinstall the Registration Pinch Roll Assembly.

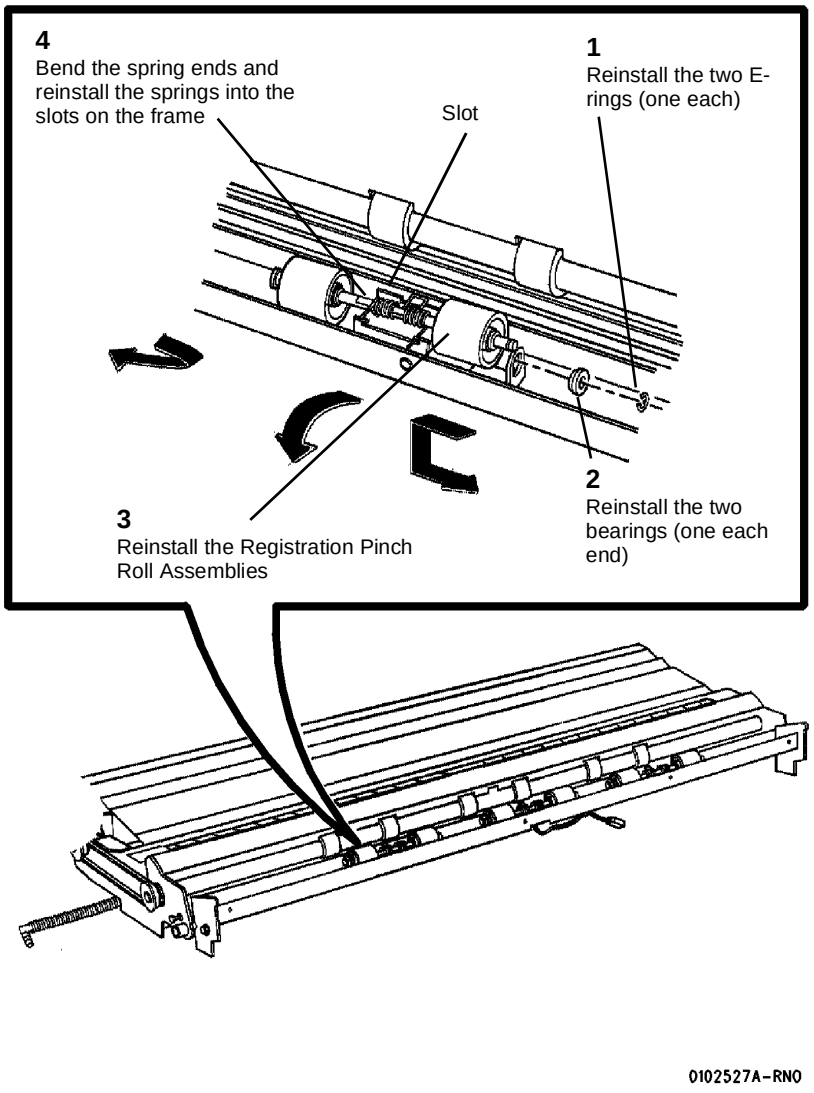


**Figure 3 Reinstalling the Registration Pinch Roll Assembly**

3. (Figure 4): Reinstall the springs.
4. Complete the reassembly of the Printer and perform the following:
   a. Fuser Temperature (NVM) (ADJ 10.1)
   b. Vertical Magnification (ADJ 8.1)
   c. Lead Edge Registration (ADJ 8.2)
   d. Cut Length (ADJ 8.3)

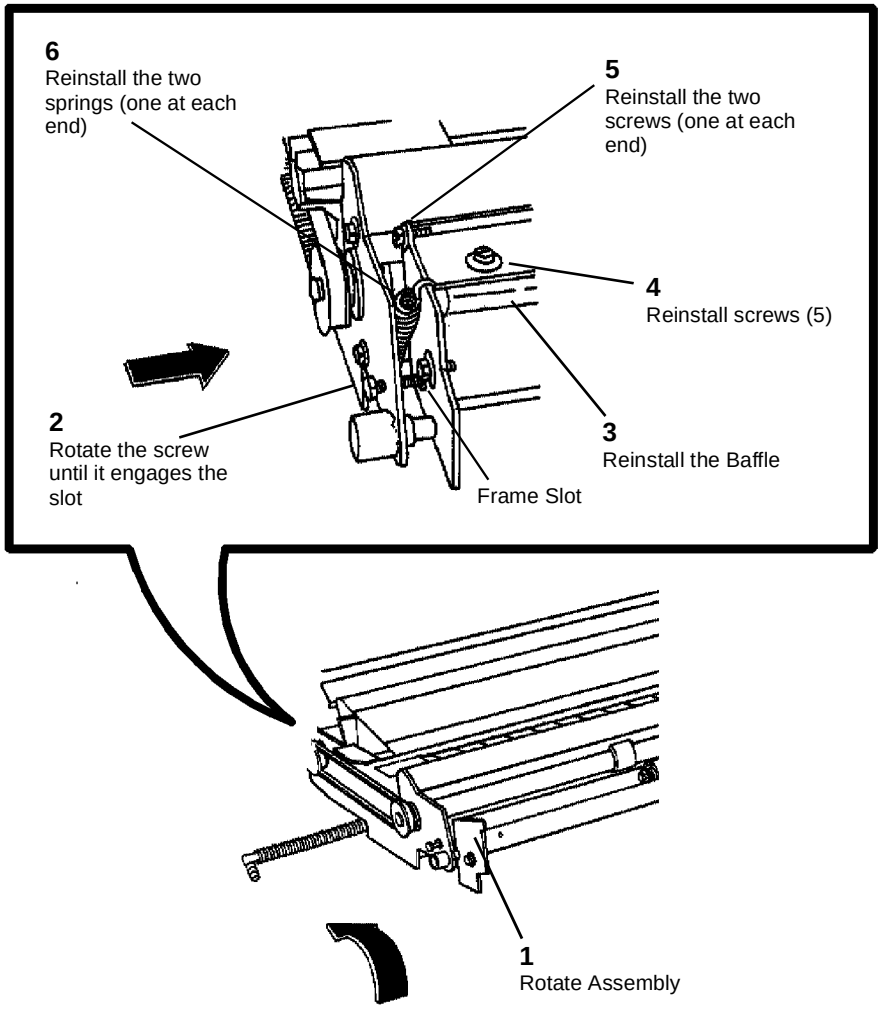


0102528A-RNO

**Figure 4 Reinstalling the Springs**

# REP 8.13 Media Feed Drive Belt

**Parts List on PL 8.1**

## WARNING

**Switch off the Main Power Switch. Disconnect the Power Cord.**

## Removal

1. Latch the Xerographic Module at the Service Position (REP 9.2).
2. Remove the Media Transport Assembly (REP 8.1).
3. Remove the Fabric Guide (REP 8.9).
4. Remove the Pressure Plates (REP 8.5).
5. Turn the Media Transport Assembly over.

6. (Figure 1): Remove the Media Feed Drive Belt.

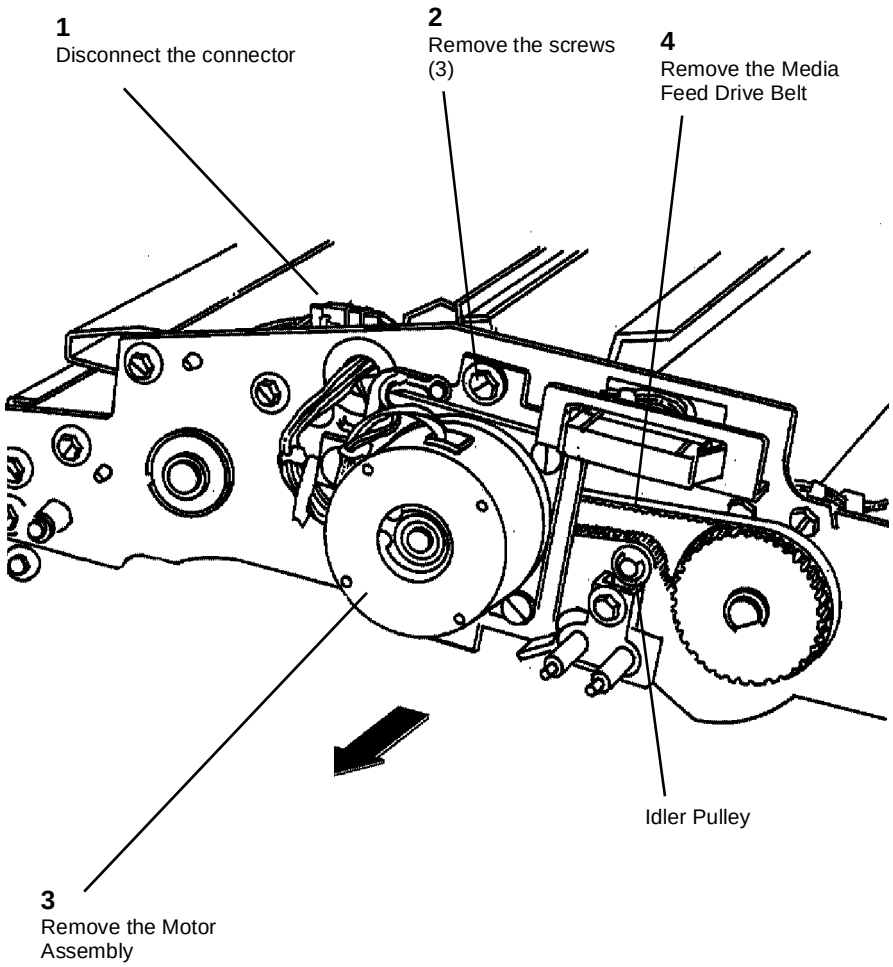


**Figure 1 Removing the Media Feed Drive Belt**

## Replacement

1. Ensure that the belt is over the Idler Pulley.

# REP 8.15 Cutter Home Sensor

**Parts List on PL 7.8**

**WARNING**

**Switch off the Main Power Switch. Disconnect the Power Cord.**

***NOTE:*** *The art used for this procedure was developed for previous products and may not match the 8825/8830 configuration exactly.*

## Removal

1. Open the Cutter Drawer.
2. (Figure 1): Remove the Cutter Home Sensor.

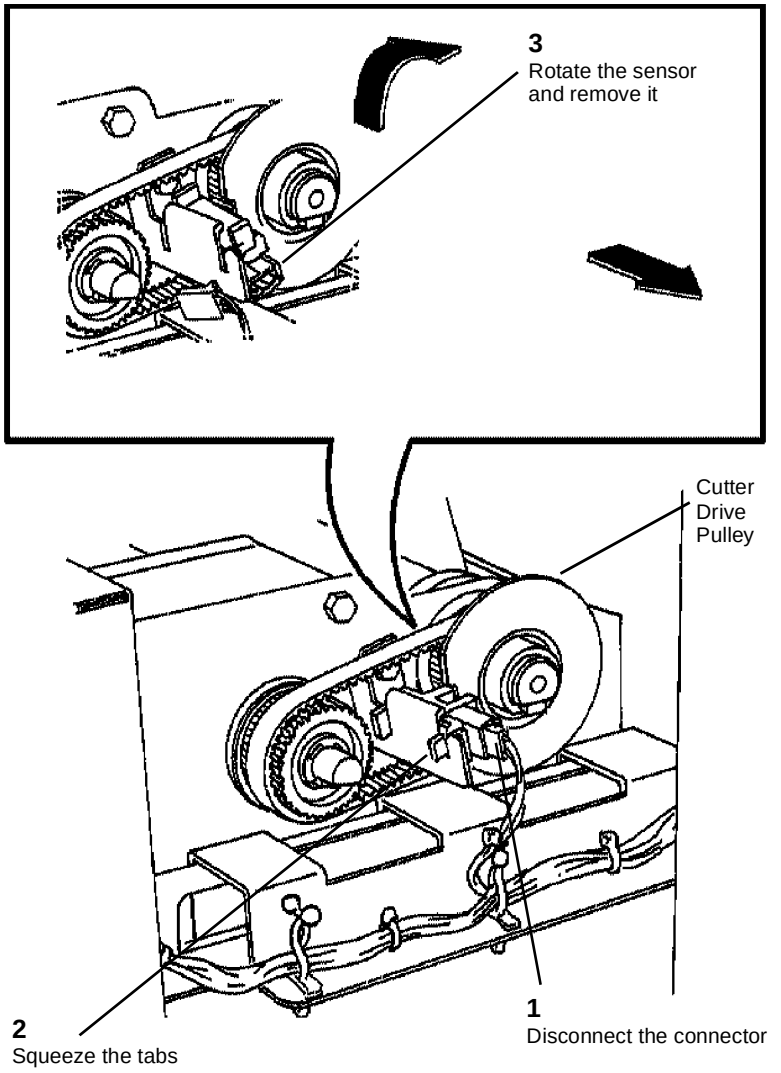


**Figure 1 Removing the Cutter Home Sensor**

## Replacement

1. Center the Disc of the Cutter Drive Pulley in the sensor during reassembly.

# REP 8.16 Exit Roll

**Parts List on PL 8.4**

**WARNING**

**Switch off the Main Power Switch. Disconnect the Power Cord.**

## Removal

1. Latch the Xerographic Module at the Service Position (REP 9.2).
2. Remove the Media Transport Assembly (REP 8.1).
3. Remove the Media Exit Switch (REP 8.2).
4. (Figure 1): Remove the Exit Roll from the Front Pivot Assembly.

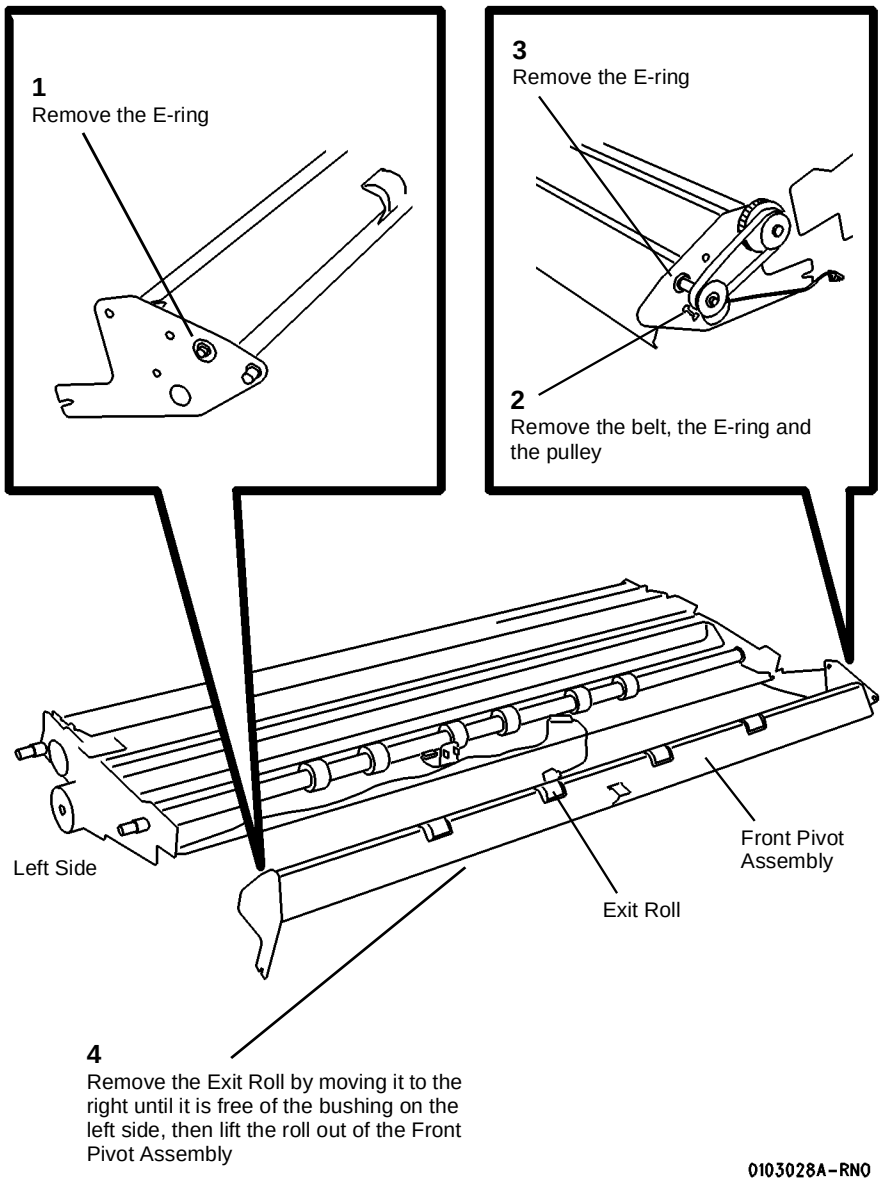


**Figure 1 Removing the Exit Roll**

# REP 8.17 Registration Drive Roll

**Parts List on PL 8.2**

**WARNING**

**Switch off the Main Power Switch. Disconnect the Power Cord.**

## Removal

1. Latch the Xerographic Module at the Service Position (REP 9.2).
2. Remove the Media Transport Assembly (REP 8.1).
3. Remove the Fabric Guide (REP 8.9).
4. Remove the Pressure Plates (REP 8.5).
5. Turn the Media Transport Assembly over.
6. (Figure 1): Remove the Media Feed Drive Belt.
7. Turn the Media Transport over and remove the screws (2 each side) and the baffle that they secure.

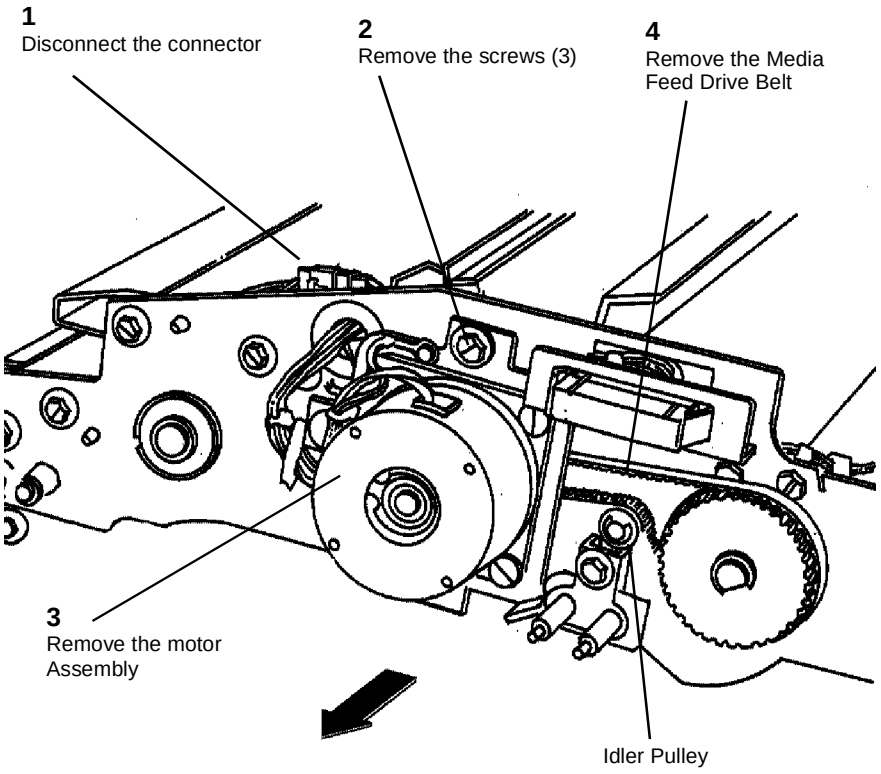


**Figure 1 Removing the Media Feed Drive Belt**

8. (Figure 2): Remove the Baffle.
9. Remove the Registration Drive Roll by pushing the bearings out of the frame and moving the roll as required for removal.

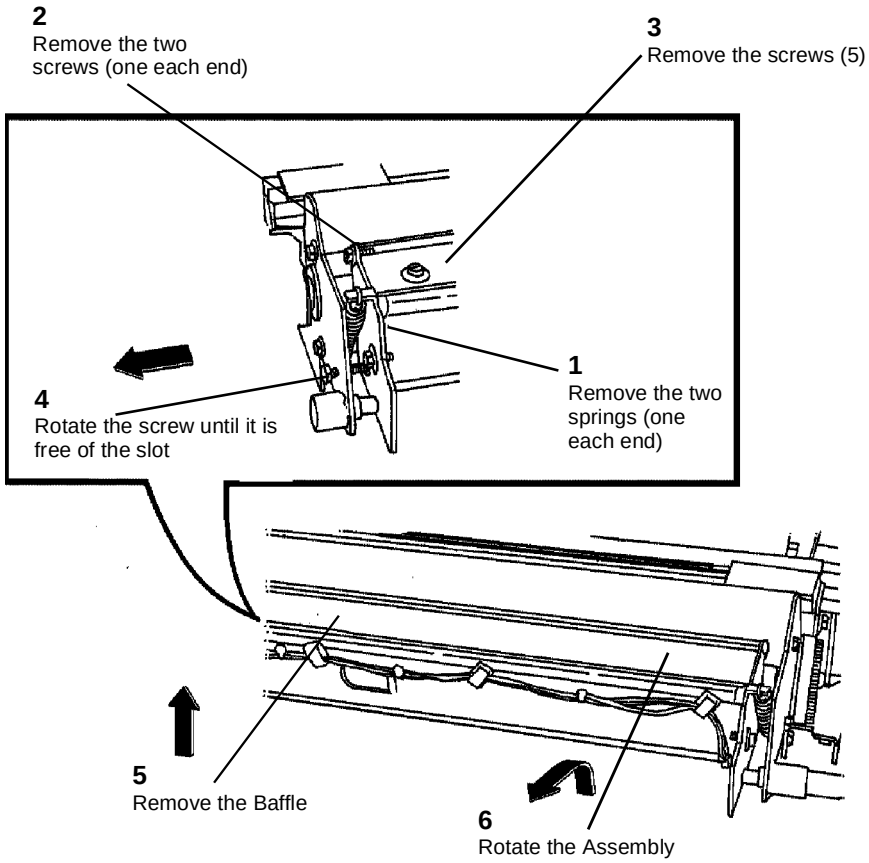


**Figure 2 Removing the Baffle**

# REP 9.1 Xerographic Module

**Parts List on PL 9.1, PL 10.1**

**WARNING**

**Switch off the Main Power Switch. Disconnect the Power Cord.**

## Removal

1. Loosen the screws and open the Rear Door.
2. Raise and latch the Top Cover.
3. Lift and rotate the Image Module to the Service Position.
4. Lower the Media Transport Cover.

***NOTE:*** *Figure 1 shows only the Front Support Bracket.*

5. (Figure 1): Prepare the Front and Rear Support Brackets for raising the Xerographic Module to the Service Position.

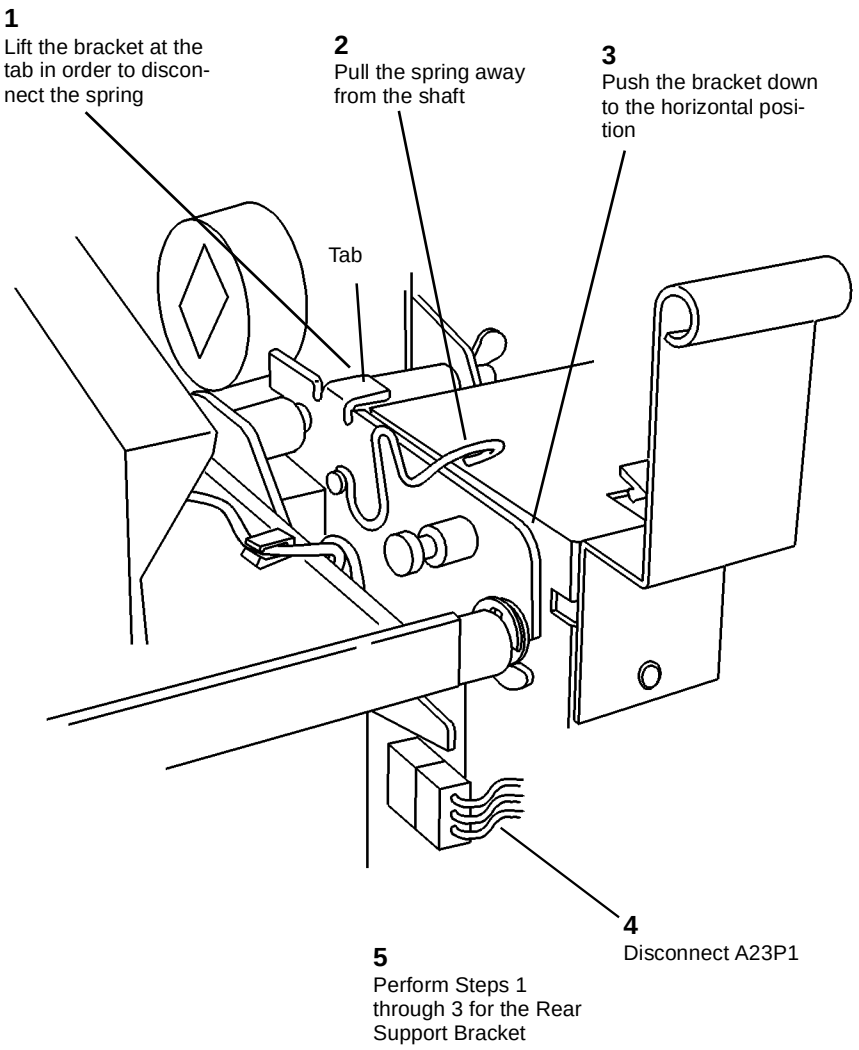


**Figure 1 Preparing the Support Bracket**

6. Remove the Web Oiler Assembly (REP 10.7).

***NOTE:*** *In the following steps, "Left" and "Right" describe machine locations as observed when you are facing the Xerographic Module at the left side of the Printer.*

7. (Figure 2): Install the Handles onto the Left and Right Side of the Xerographic Module.

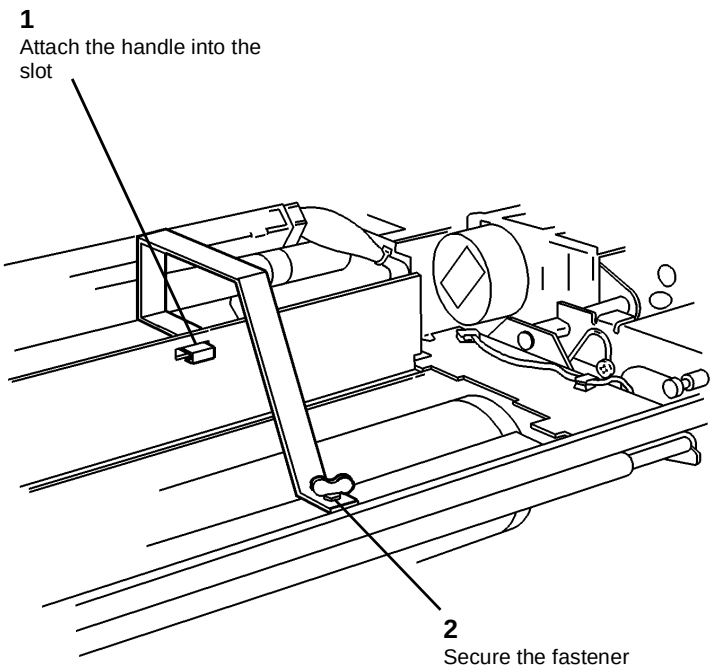


**Figure 2 Installing the Handles (Right Side)**

***NOTE:*** *The latches that secure the Xerographic Module to the Printer Frame are spring-loaded and will automatically engage the holes. The latches have a 1/4 turn lockout feature that may be used to prevent actuation during reinstallation of the Xerographic Module. When performing the following step, ensure that the spring-loaded feature is active.*

8. (Figure 3): Using the handles, rotate the Xerographic Module 90 degrees so that the latches lock into the holes in the frame.

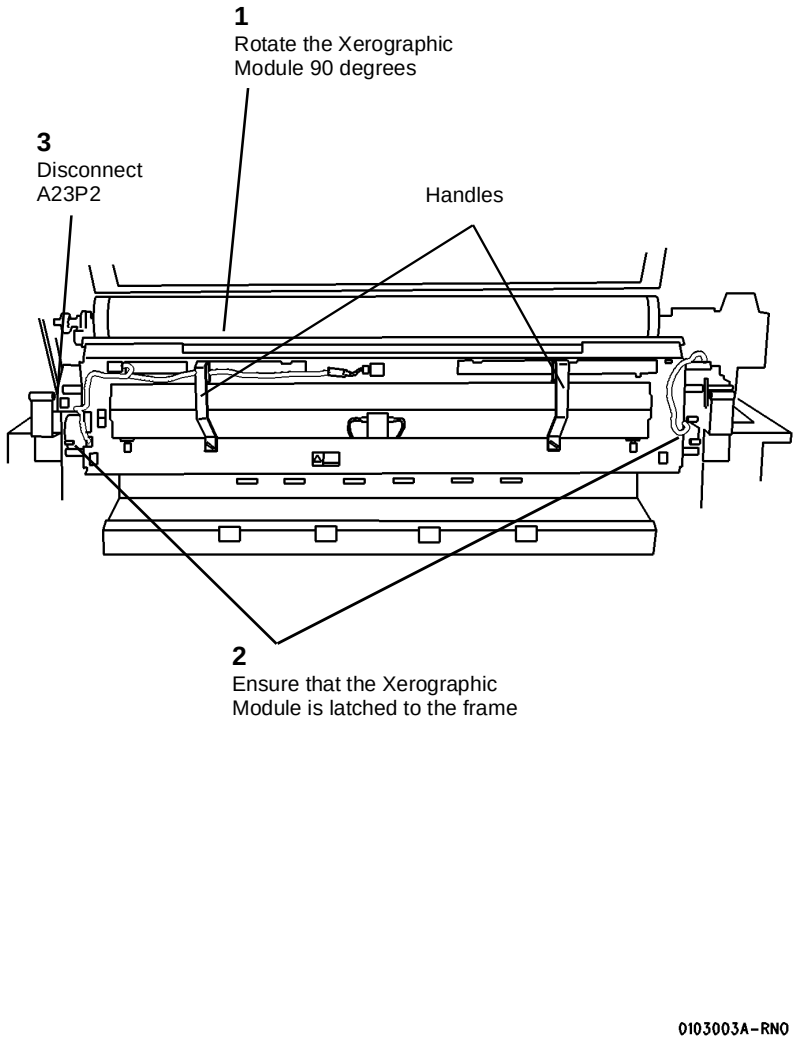


**Figure 3 Latching the Xerographic Module at the Service Position**

9. (Figure 4): Move the bearing out of the Xerographic Module Frame (Left Side).

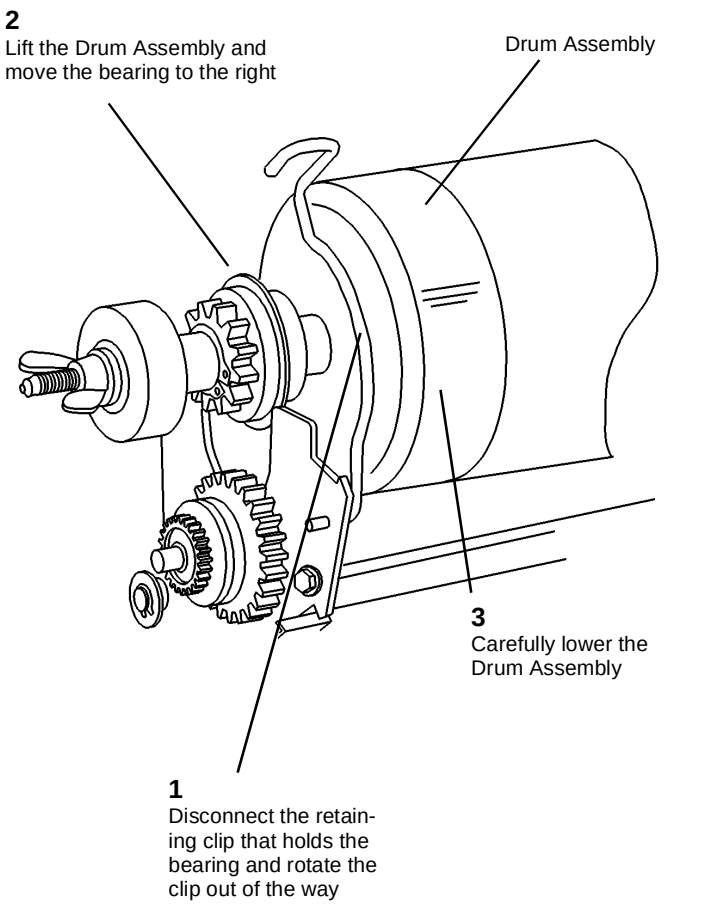


**Figure 4 Moving the Bearing (Left Side)**

10. (Figure 5): Move the bearing out of the Xerographic Module Frame (Right Side).

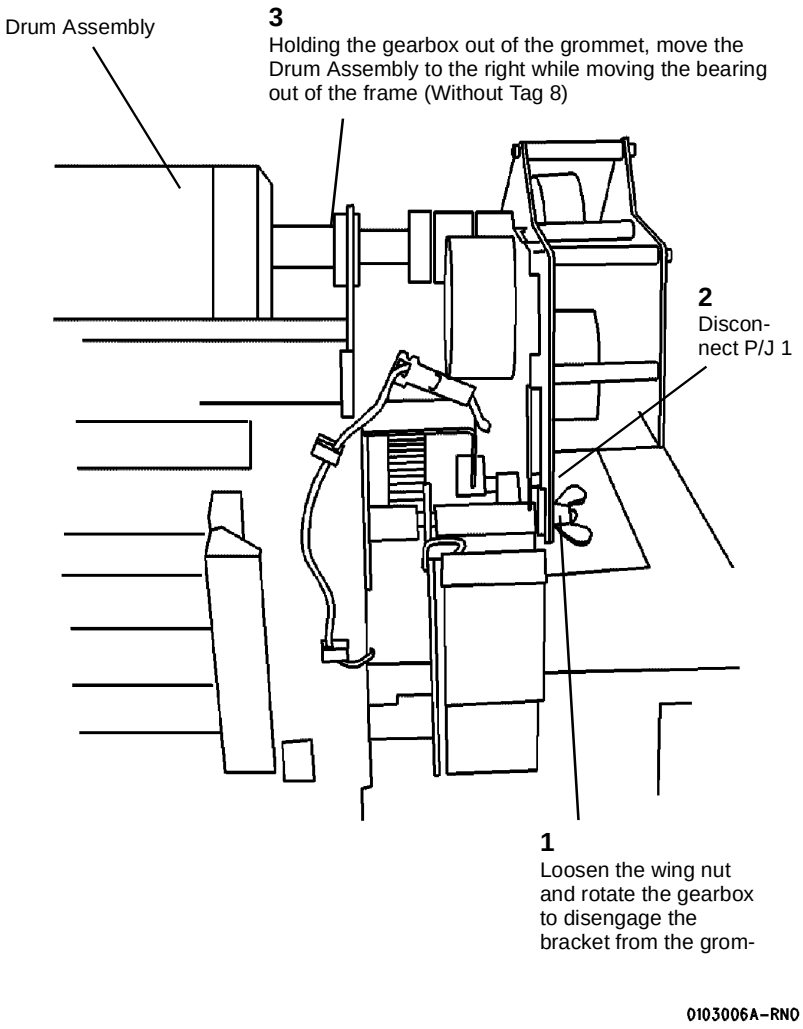


**Figure 5 Moving the Bearing (Right Side)**

11. (Figure 6): Carefully remove the Drum Assembly from the Printer and place it, Gear Box down, in a safe place on the floor.

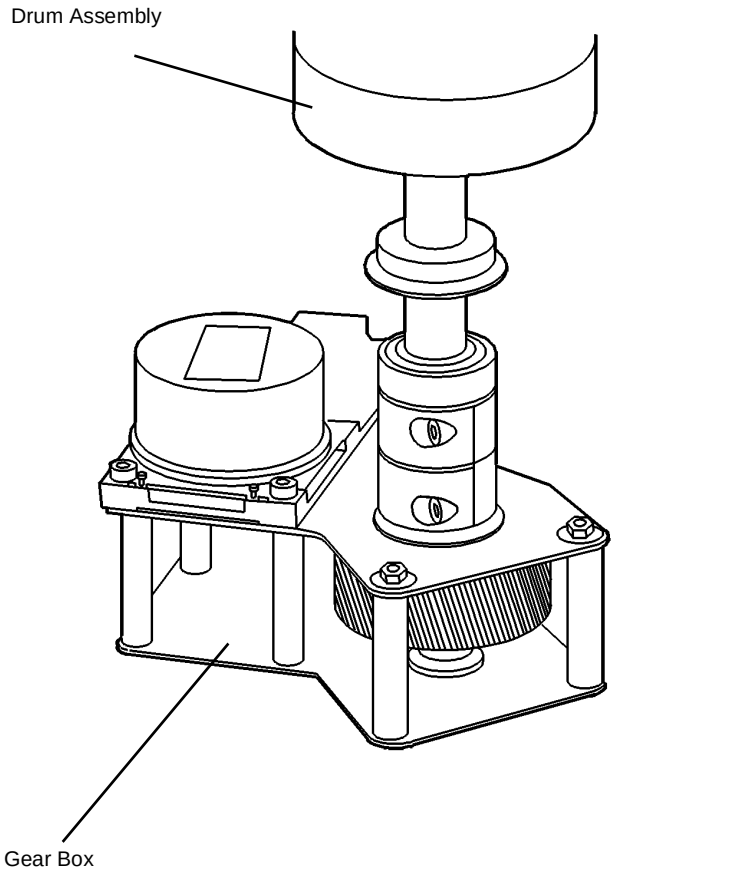


**Figure 6 Removing the Drum Assembly**

12. Using the Handles, lift the Xerographic Module out of the Printer and place it on a stable, flat surface.

# REP 9.2 Drum Assembly

## Parts List on PL 9.2

**WARNING**

**Switch off the Main Power Switch. Disconnect the Power Cord.**

## Removal

1. Loosen the screws and open the Rear Door.
2. Raise and latch the Top Cover.
3. Lift and rotate the Image Module to the Service Position.
4. Lower the Media Transport Cover.

***NOTE:*** *Figure 1 shows only the Front Support Bracket.*

5. (Figure 1): Prepare the Front and Rear Support Brackets for raising the Xerographic Module to the Service Position.

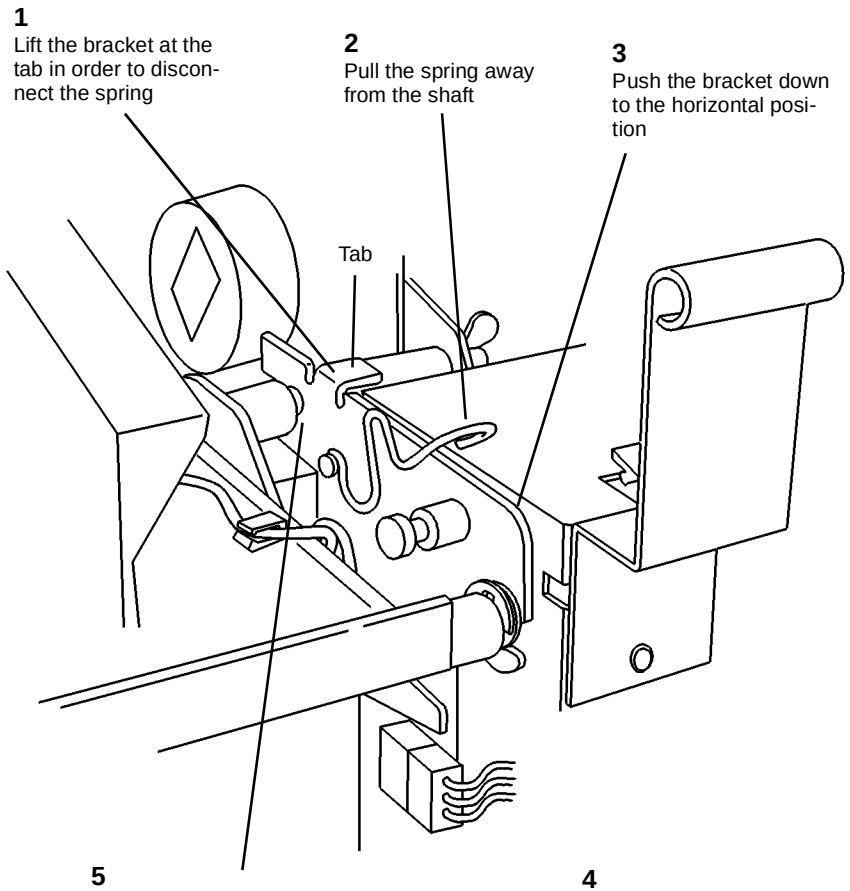


**Figure 1 Preparing the Support Bracket**

***NOTE:*** *The latches that secure the Xerographic Module to the Printer Frame are spring-loaded and will automatically engage the holes. The latches have a 1/4 turn lockout feature that may be used to prevent actuation during reinstallation of the Xerographic Module. When performing the following step, ensure that the spring-loaded feature is active.*

6. (Figure 2): Using the handles on the Web Oiler Assembly, rotate the Xerographic Module 90 degrees so that the latches lock into the holes in the frame.

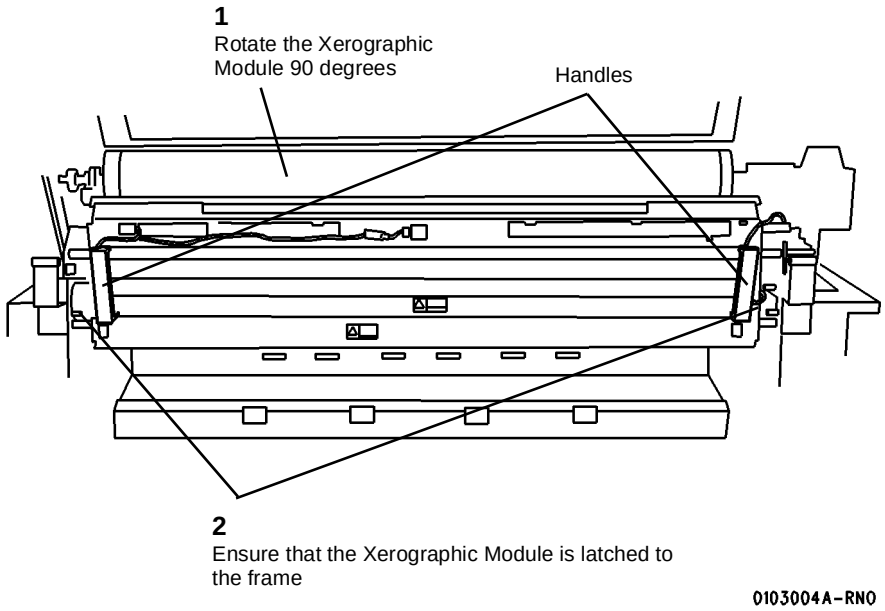


**Figure 2 Latching the Xerographic Module at the Service Position**

***NOTE:*** *In the following steps, "Left" and "Right" describe machine locations as observed when you are facing the Xerographic Module at the left side of the Printer.*

7. (Figure 3): Move the bearing out of the Xerographic Module Frame (Left Side).

8. (Figure 4): Move the bearing out of the Xerographic Module Frame (Right Side).

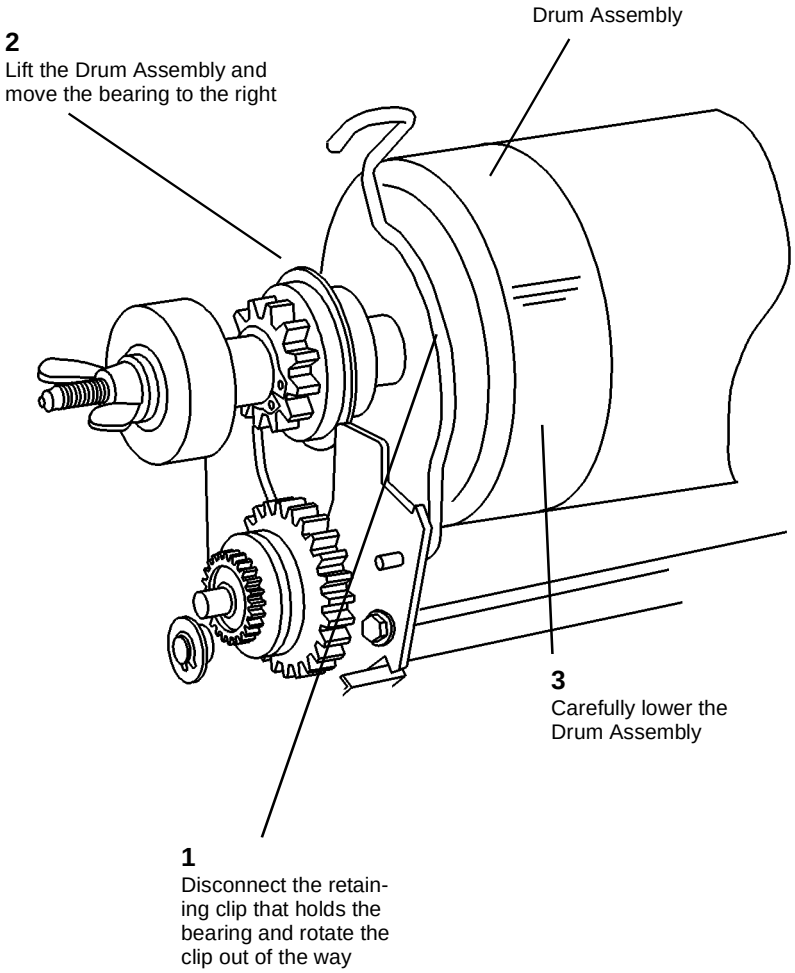


**Figure 3 Moving the Bearing (Left Side)**

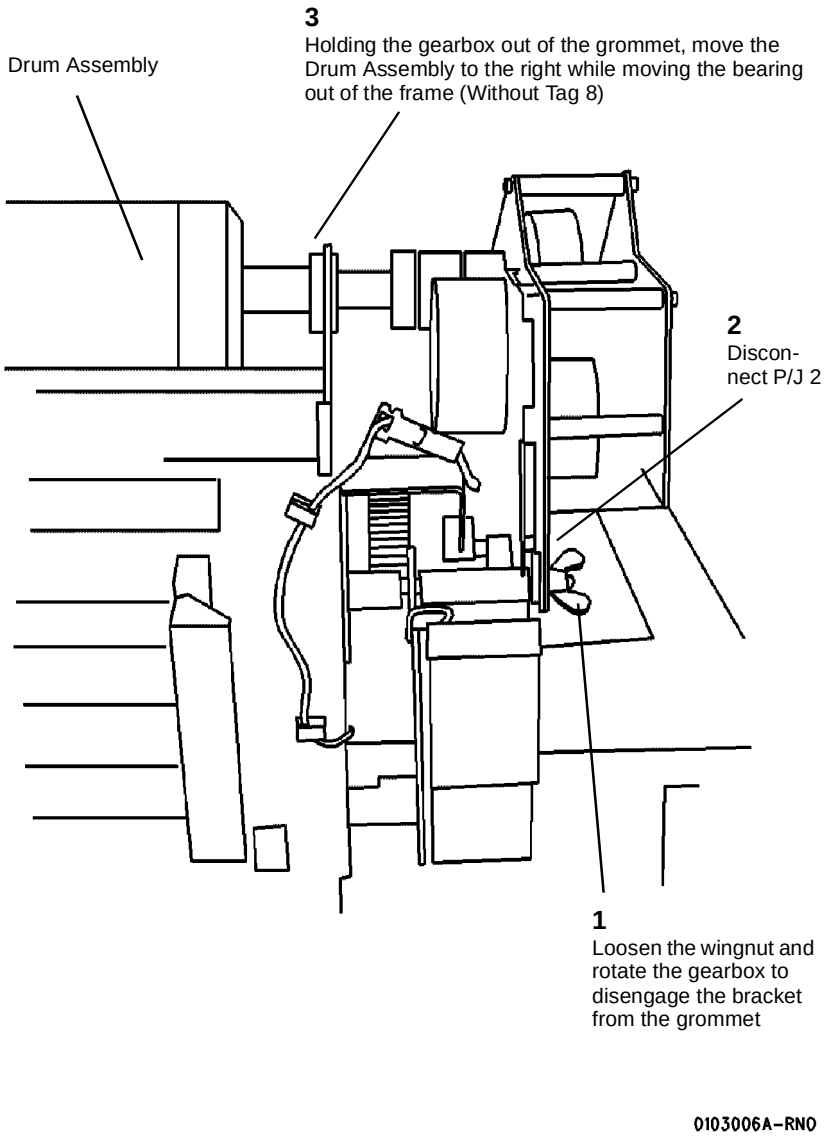


**Figure 4 Moving the Bearing (Right Side)**

9. (Figure 5): Carefully remove the Drum Assembly from the Printer and place it, Gear Box down, in a safe place on the floor.

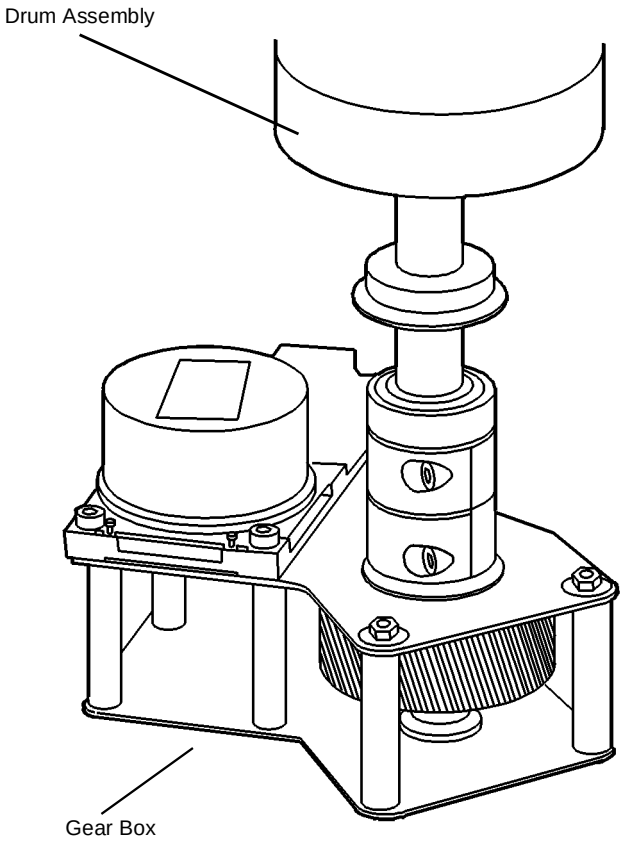


**Figure 5 Removing the Drum Assembly**

# REP 9.3 Drum

## Parts List on PL 9.2

**WARNING**

**Switch off the Main Power Switch. Disconnect the Power Cord.**

## Removal

***NOTE:*** *When the Drum is replaced, install a Cleaner Blade Kit (REP 9.4).*

1. Remove the Drum Assembly (REP 9.2).
2. (Figure 1): Carefully place the Drum Assembly, Gear Box down, in a safe place on the floor.

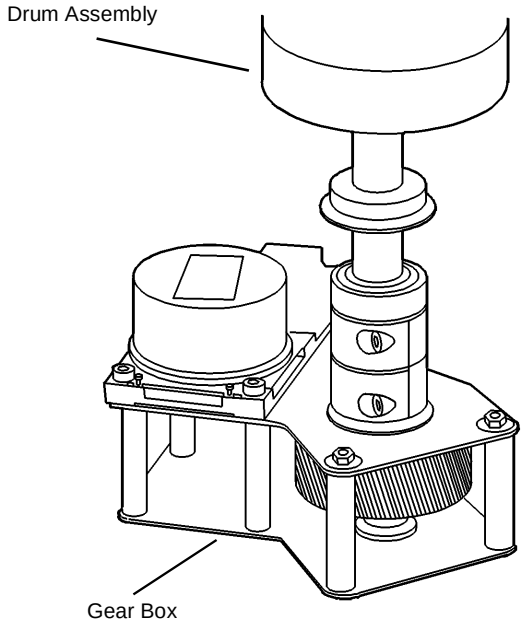


**Figure 1 Securing the Drum Assembly**

3. (Figure 2): Remove the Drum from the Shaft Assembly.

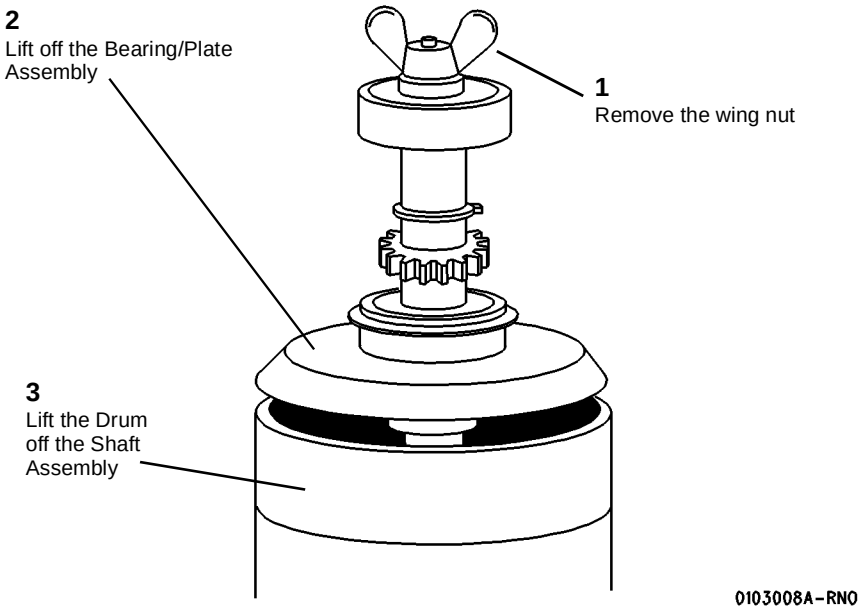


**Figure 2 Removing the drum from the Shaft Assembly**

4. If the Drum is being replaced, install a Cleaner Blade Kit (REP 9.4).
5. Reassemble the Drum Assembly.
6. Perform GP 4 Drum Cleaning Enhancement procedure.
7. Reinstall the Drum Assembly.
8. Perform the Electrostatic Series (ADJ 9.2).

# REP 9.4 Cleaner Blade Kit

## Parts List on PL 9.5A

***NOTE:*** *These are the instructions to install the Cleaner Blade Kit. The kit contains the following items:*

- *Right-hand Seal (57 mm wide)*
- *Left-hand Seal (41 mm wide)*
- *Cleaner Blade*
- *Photoreceptor Seal*
- *Blade Retainer (3)*

**WARNING**

**Switch off the Main Power Switch. Disconnect the Power Cord.**

## Removal

***NOTE:*** *In this procedure, "Left" and "Right" describe machine locations as observed when you are facing the Xerographic Module at the left side of the Printer.*

1. Remove the Drum Assembly (REP 9.2).
2. (Figure 1): Remove the Photoreceptor Seal, Right-hand Seal, Left-hand Seal, Cleaner Blade, and the three Blade Retainers from the Xerographic Module.
3. Use a vacuum cleaner to clean the channels and the areas where the new parts will be installed.

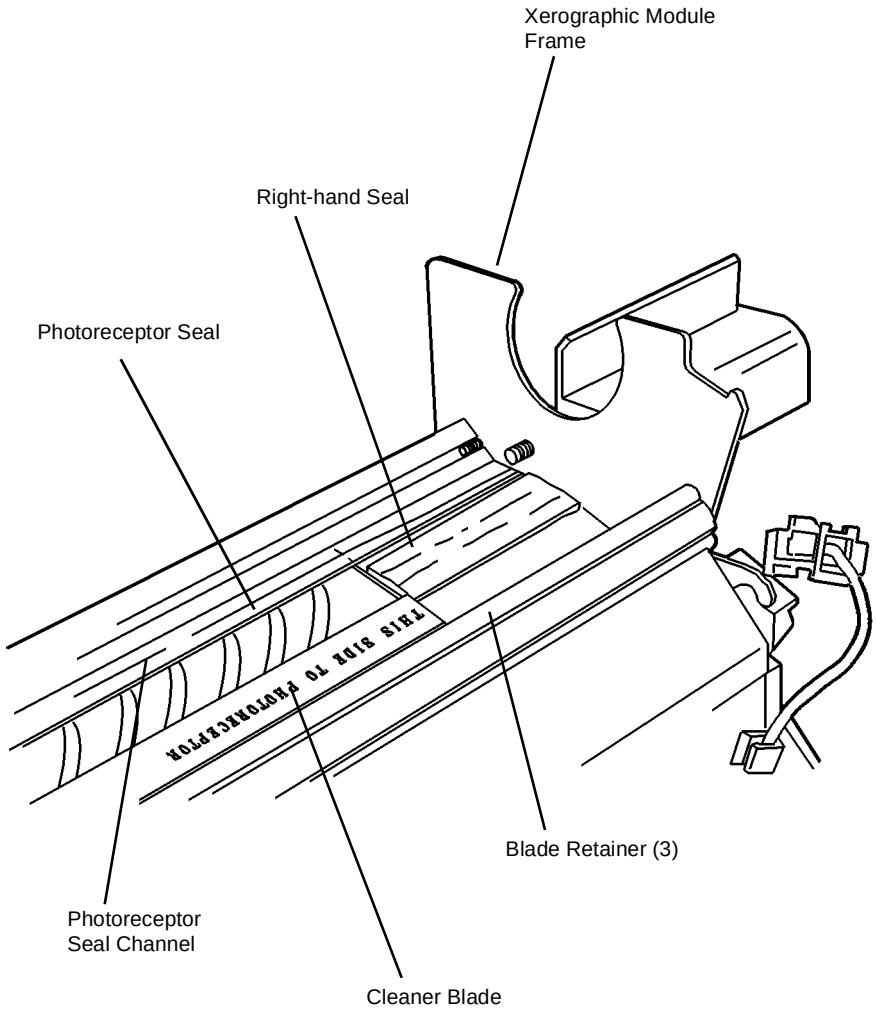


**Figure 1 Removing the Cleaner Blade**

## Replacement

1. (Figure 2): Replace the Photoreceptor Seal.
   a. Carefully fold the Photoreceptor Seal along the perforations.
   b. Slide the Photoreceptor Seal into the channel, smaller side up, so that the edge of the Photoreceptor Seal forms a seal with the inside lip of the channel.
   c. Using a soft, straight tool (a piece of shimstock works well), carefully push the seal into the channel, across the entire width of the Xerographic Module.
2. Replace the Right-hand Seal.
   a. Insert the red stripe end of the Right-hand Seal underneath the folded Photoreceptor Seal.
   b. Install the seal fuzzy side up.
   c. Ensure that the seal is flush against the Xerographic Module Frame.
3. Replace the Cleaner Blade.
   a. Start the Cleaner Blade flush against the left edge of the Right-hand Seal.
   b. Ensure that the marking, **THIS SIDE TO PHOTORECEPTOR**, is to the right.
   c. Push the Cleaner Blade into the channel, with the Arrow marking to the left.
   d. Ensure that the blade is fully seated in the channel.
4. Install the first of the three Blade Retainers approximately one inch from the Xerographic Module Frame, working to the left.

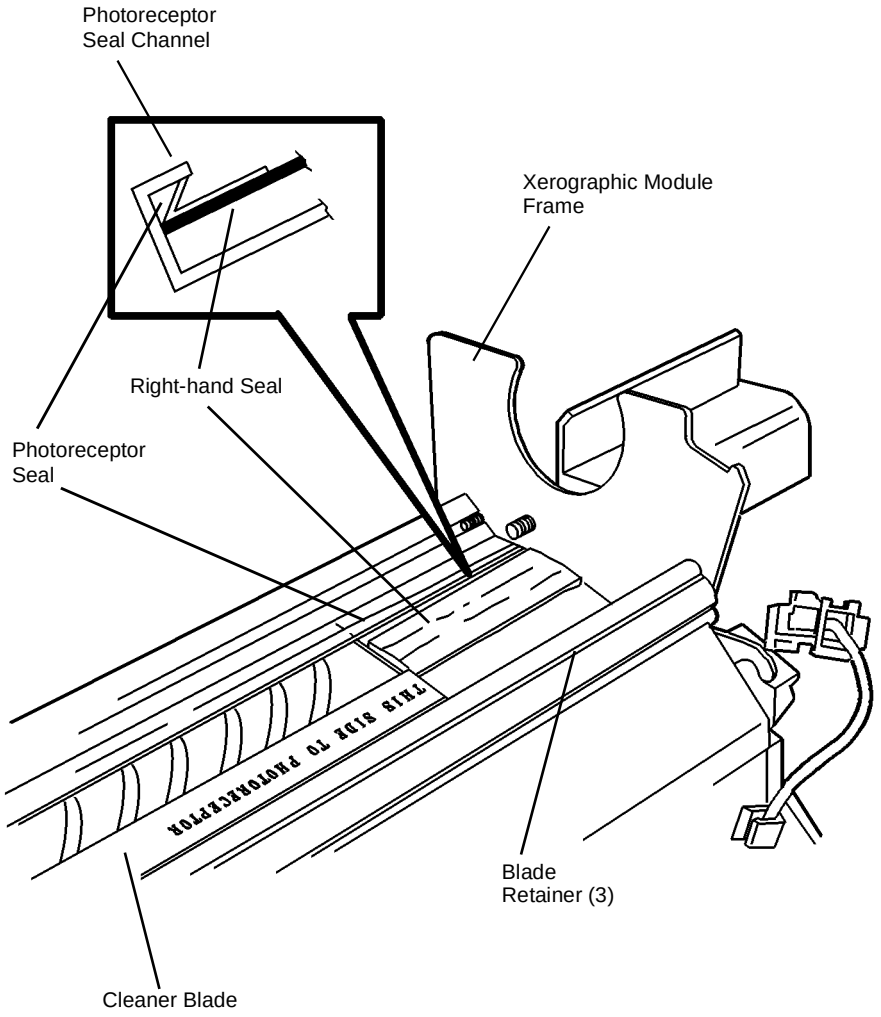


**Figure 2 Installing the Cleaner Blade Kit**

5. (Figure 3): Complete the installation of the remaining two Blade Retainers, positioning them, one at a time, to the left of the first one.
6. Replace the Left-hand Seal.

a. Insert the red stripe end of the Left-hand Seal underneath the folded Photoreceptor Seal.
b. Install the seal fuzzy side up.
c. Ensure that the seal is flush against the Xerographic Module Frame.

7. Perform GP 4 Drum Cleaning Enhancement procedure.

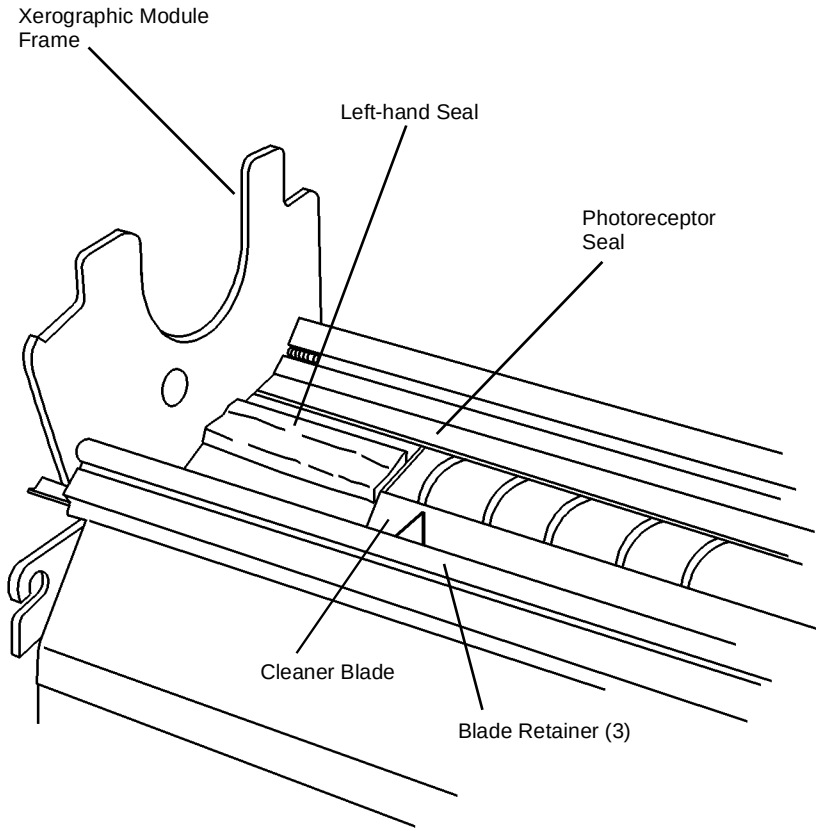


0103013A-RNO

**Figure 3 Installing the Cleaner Blade Kit**

# REP 9.5 Developer Module

## Parts List on PL 9.8

### WARNING

**Switch off the Main Power Switch. Disconnect the Power Cord.**

***NOTE:*** *The art used for this procedure was developed for previous products and may not match the 8825/8830 configuration exactly.*

## Removal

### CAUTION

*Before removing the Developer Module, ensure that there is a clean area on which to place the assembly.*

1. Loosen the screws and open the Rear Cover.
2. Raise and latch the Top Cover.
3. Raise and hold the Developer Module Cover while lifting and removing the Developer Module Side Cover.
4. Lower the Top Cover.

***NOTE:*** *In the following step, tape the Toner Cartridge dispense holes in order to prevent toner from pouring out when the Toner Cartridge is tipped up for removal.*

5. (Figure 1): Remove the Toner Cartridge.

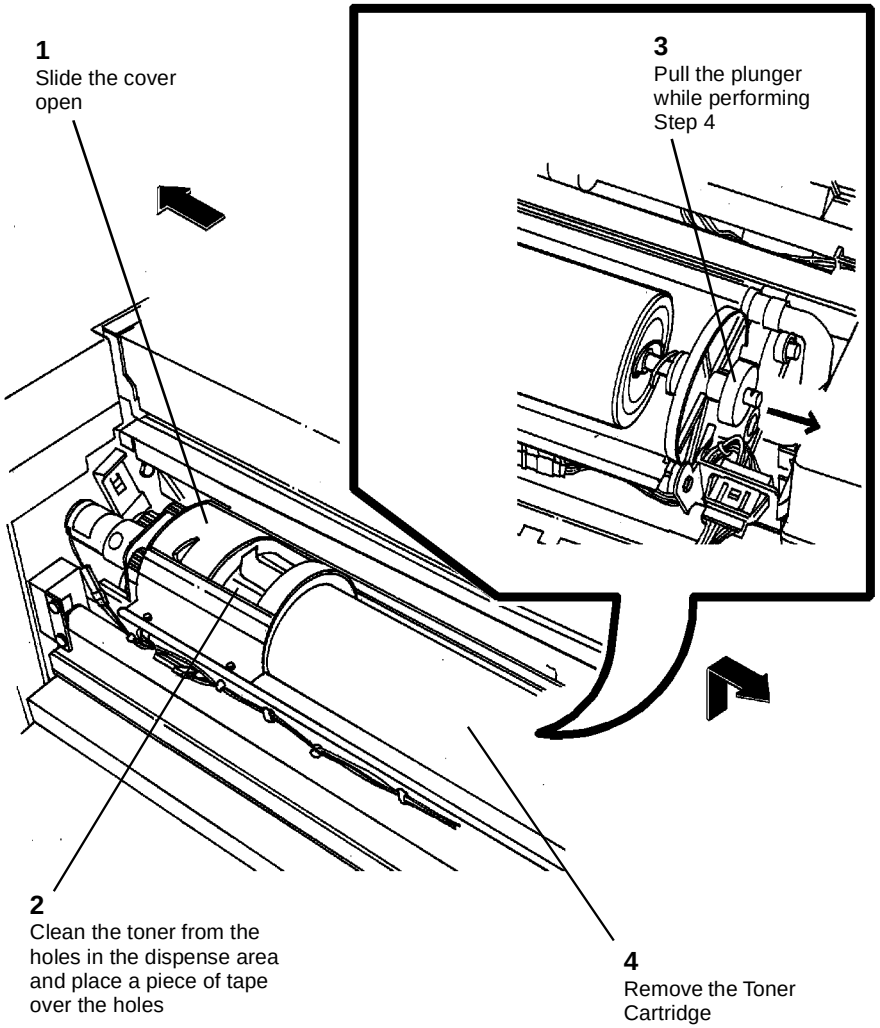


0101599A-RNO

**Figure 1 Removing the Toner Cartridge**

### CAUTION

*Ensure that the clamp will not cause interference when the Developer Module is removed.*

6. (Figure 2): Remove the Developer Module.

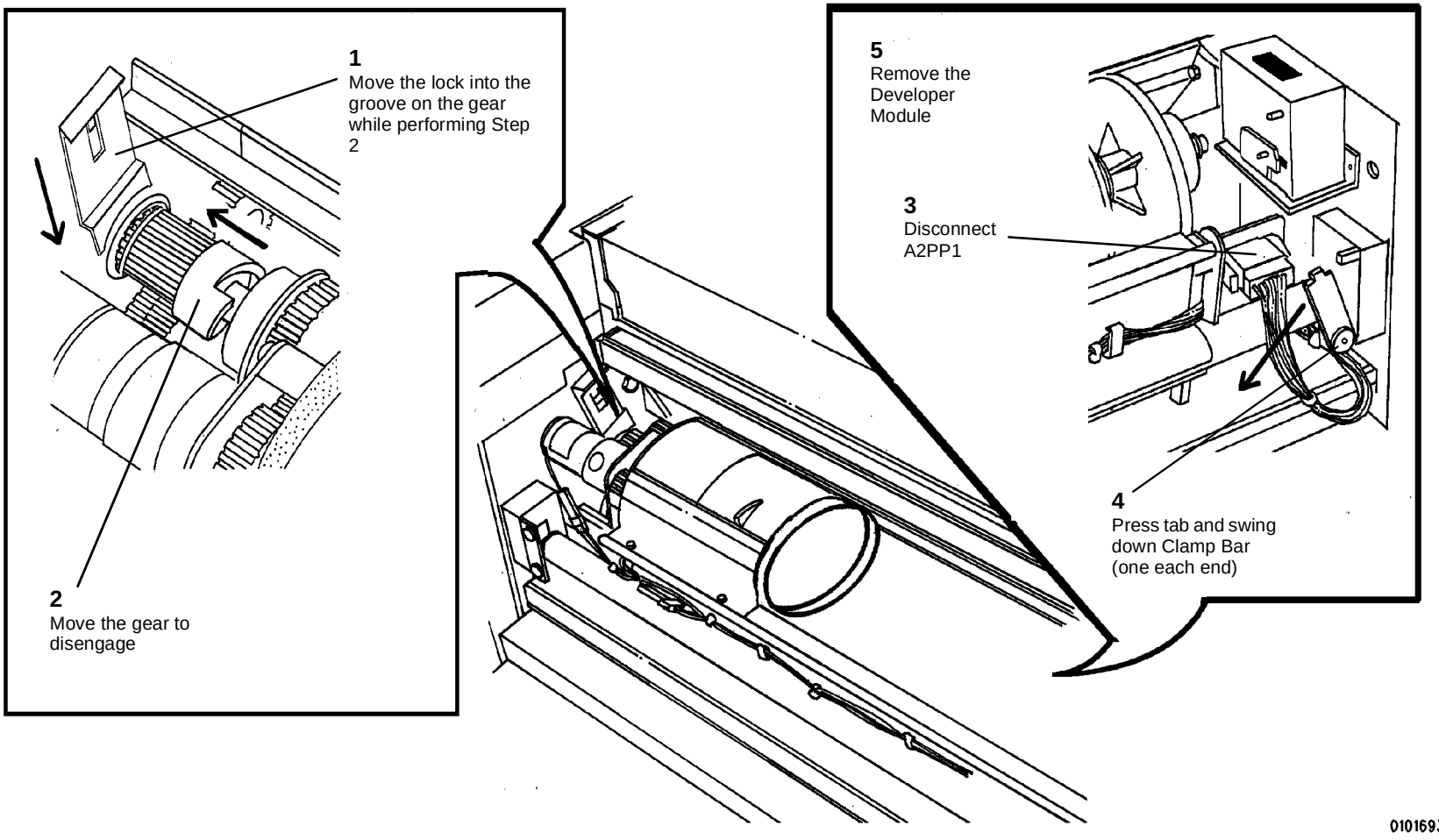


**Figure 2 Removing the Developer Module**

## Replacement

1. (Figure 3): Reinstall the Developer Module.

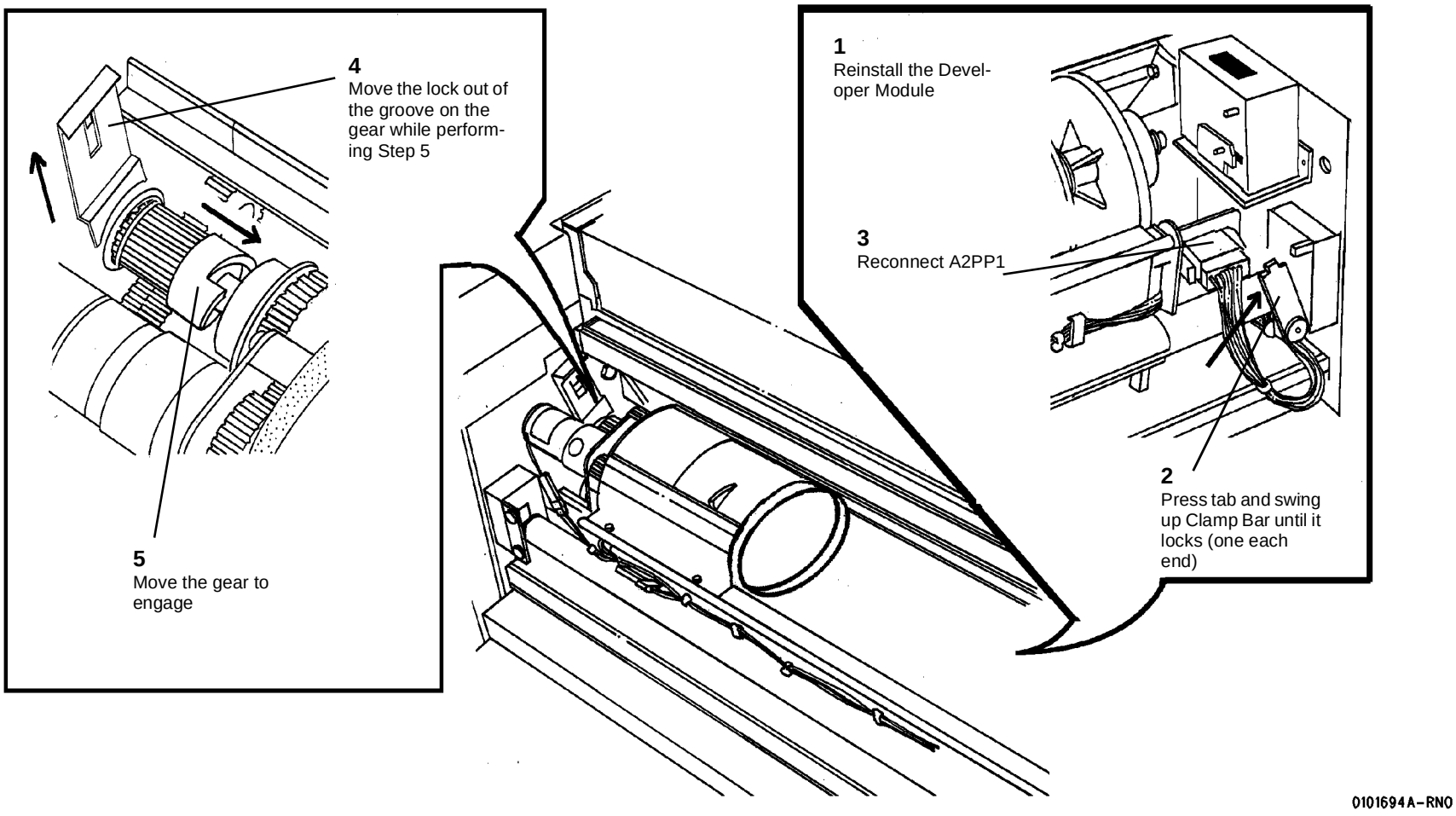


**Figure 3 Reinstalling the Developer Module**

**CAUTION**

*Ensure that the Developer Module is fully reinstalled in the brackets.*

**CAUTION**

*Ensure that the gear is free to engage the Developer Module drive gears.*

***NOTE:*** *To ensure that the Toner Cartridge is correctly engaged in the Drive Plate, rotate the cartridge in both directions.*

2. (Figure 4): Reinstall the Toner Cartridge.

3. If new Developer Material has been installed, perform the Toner Sensor Calibration Code [09216].

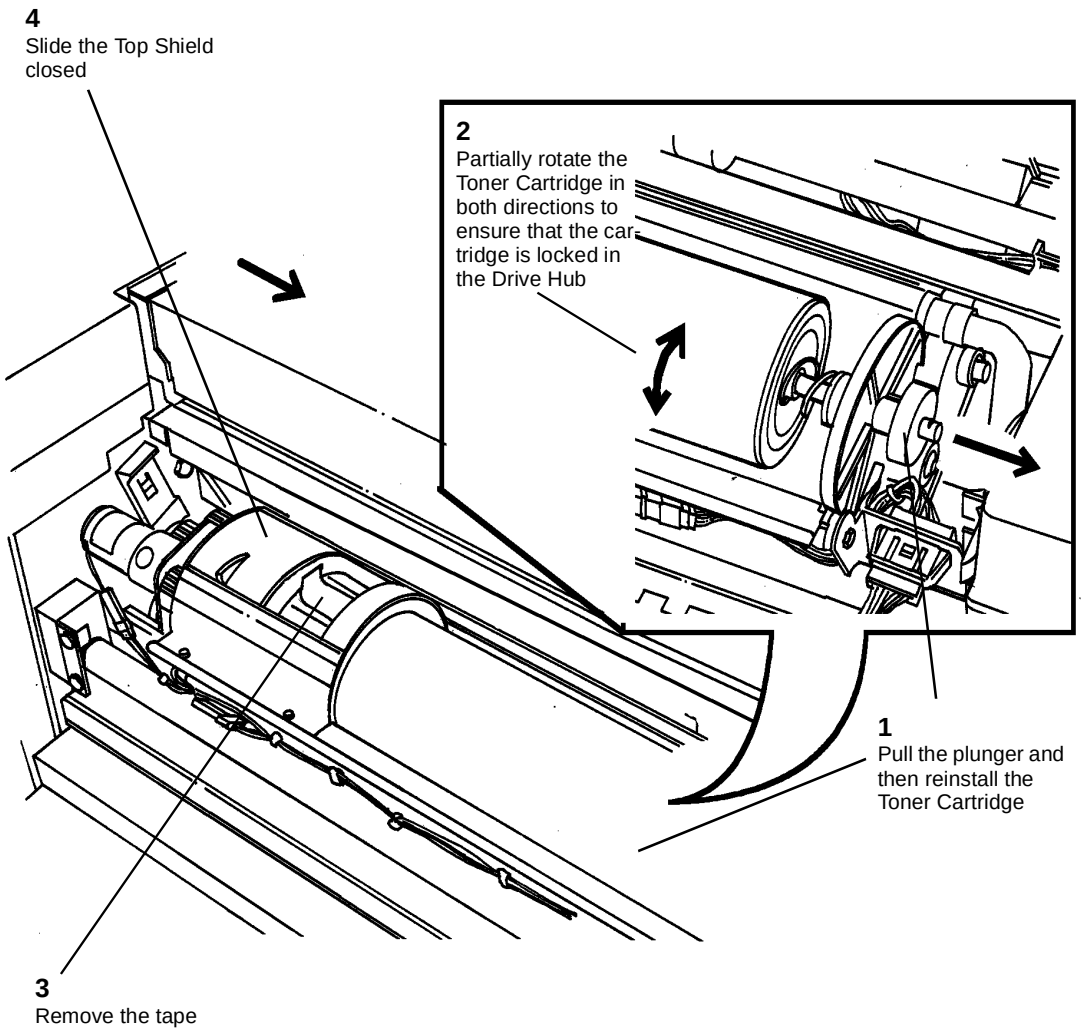


**Figure 4 Reinstalling the Toner Cartridge**

# REP 9.6 Cartridge Drive Motor

**Parts List on PL 9.10**

## WARNING

**Switch off the Main Power Switch. Disconnect the Power Cord.**

***NOTE:*** *The art used for this procedure was developed for previous products and may not match the 8825/8830 configuration exactly.*

## Removal

1. Remove the Developer Module (REP 9.5).
2. (Figure 1): Remove the Cartridge Drive Motor.

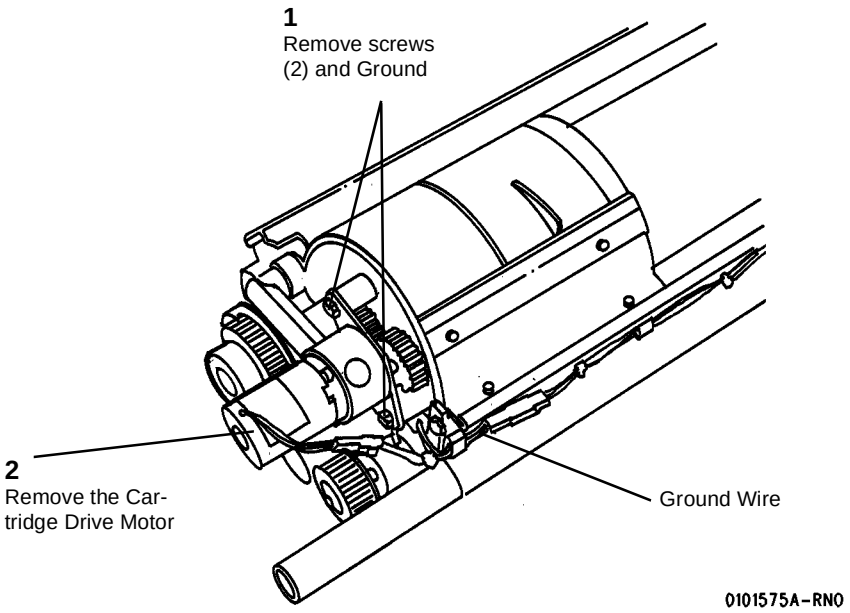


**Figure 1 Removing the Cartridge Drive Motor**

3. (Figure 2): Remove the Cartridge Drive Motor from the Mounting Plate.

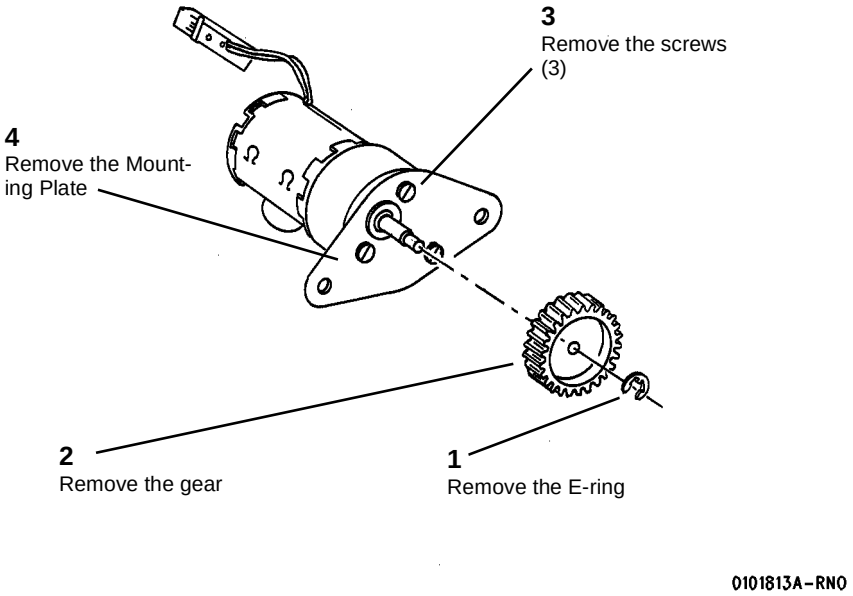


**Figure 2 Removing the Cartridge Drive Motor from the Mounting Plate**

# REP 9.7 Developer Material

**Parts List on (Refer to svc.8830prt.17324 Machine Consumables, Section 6.)**

**WARNING**

**Switch off the Main Power Switch. Disconnect the Power Cord.**

***NOTE:*** *The art used for this procedure was developed for previous products and may not match the 8825/8830 configuration exactly.*

## Removal

1. Remove the Developer Module (REP 9.5).

**CAUTION**

*Do not rotate the Developer Module in the vertical position. This may cause Developer Material to get into the Toner Cartridge Clutch (located at the end of the Developer Module).*

2. Place the Developer Module on a drop cloth on the floor.
3. (Figure 1): Remove the Sump Shield from the Developer Module.

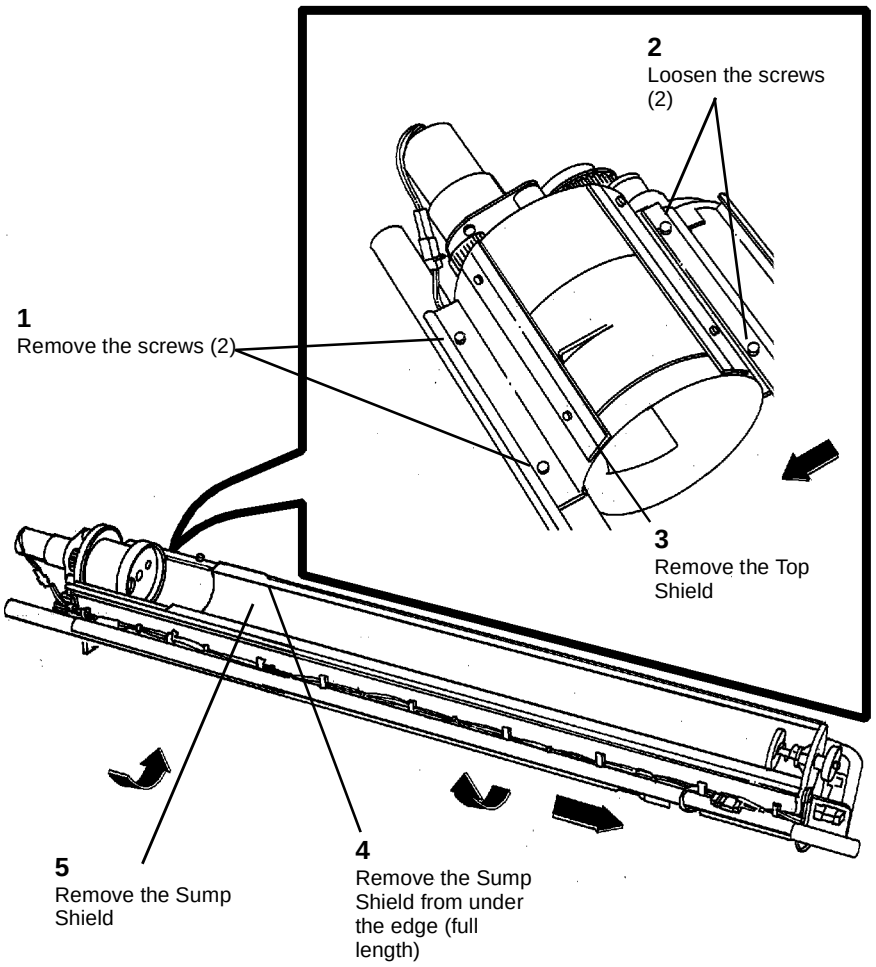


0101626A-RNO

**Figure 1 Removing the Sump Shield from the Developer Module**

***NOTE:*** *Rotate the Developer Module away from the Magnetic Roll in the following step.*

4. (Figure 2): Dump the Developer Material.

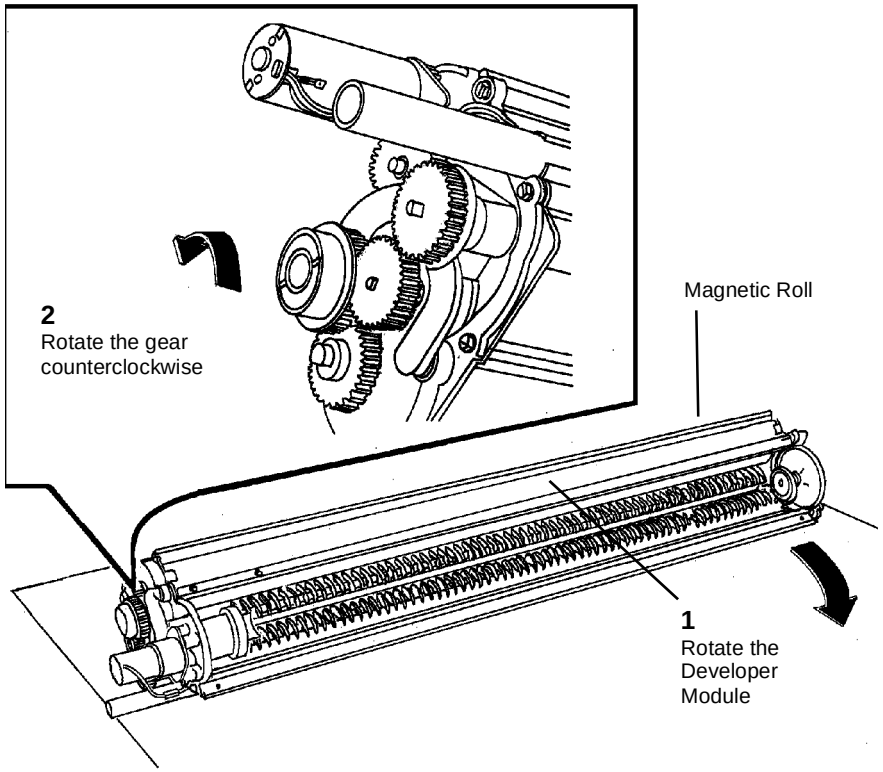


**Figure 2 Dumping the Developer Material**

**CAUTION**

*Do not rotate the Auger Gears individually more than the slight amount required for removal or to mesh the teeth during reinstallation. If the factory setting of the augers is changed during the procedure, perform the adjustment procedure, Augers (ADJ 9.6).*

5. (Figure 3): Remove the Air Pressure Tubes.

6. Using a vacuum cleaner, clean the entire Developer Module, Magnetic Roll, and Air Pressure Tubes thoroughly.

**CAUTION**

*Ensure that the entire length of the tube on the Developer Module is clear of any developer.*

7. Using a vacuum cleaner, clean the housing where the Air Pressure Tubes attach.

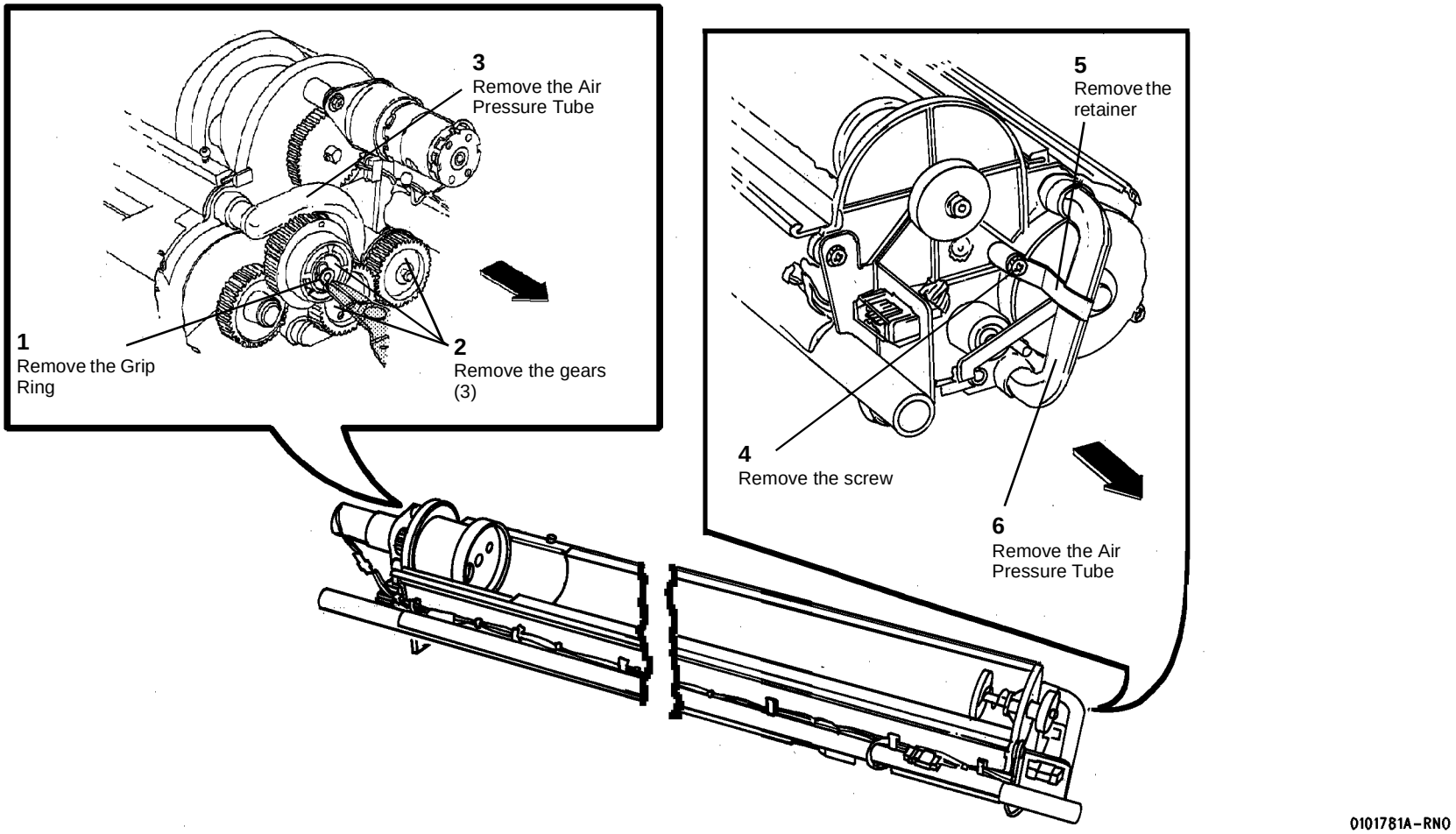


**Figure 3 Removing the Air Pressure Tubes**

## Replacement

***NOTE:*** *Pour the Developer Material evenly over the full length of the augers.*

1. (Figure 4): Install the Developer Material and record the batch number in the Machine Log.

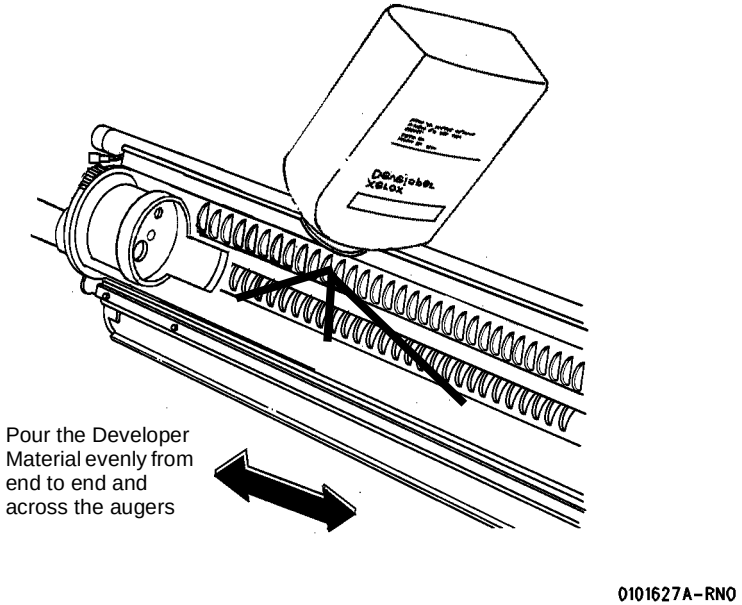


**Figure 4 Installing the Developer Material**

**CAUTION**

*Do not rotate the Auger Gears individually more than the slight amount required for removal or to mesh the teeth during reinstallation. If the factory setting of the augers is changed during the procedure, perform the adjustment procedure, Augers (ADJ 9.6).*

***NOTE:*** *The gears must be reinstalled with the flanges as shown to ensure that all the gears are secured.*

2. (Figure 5): Reinstall the Air Pressure Tubes.

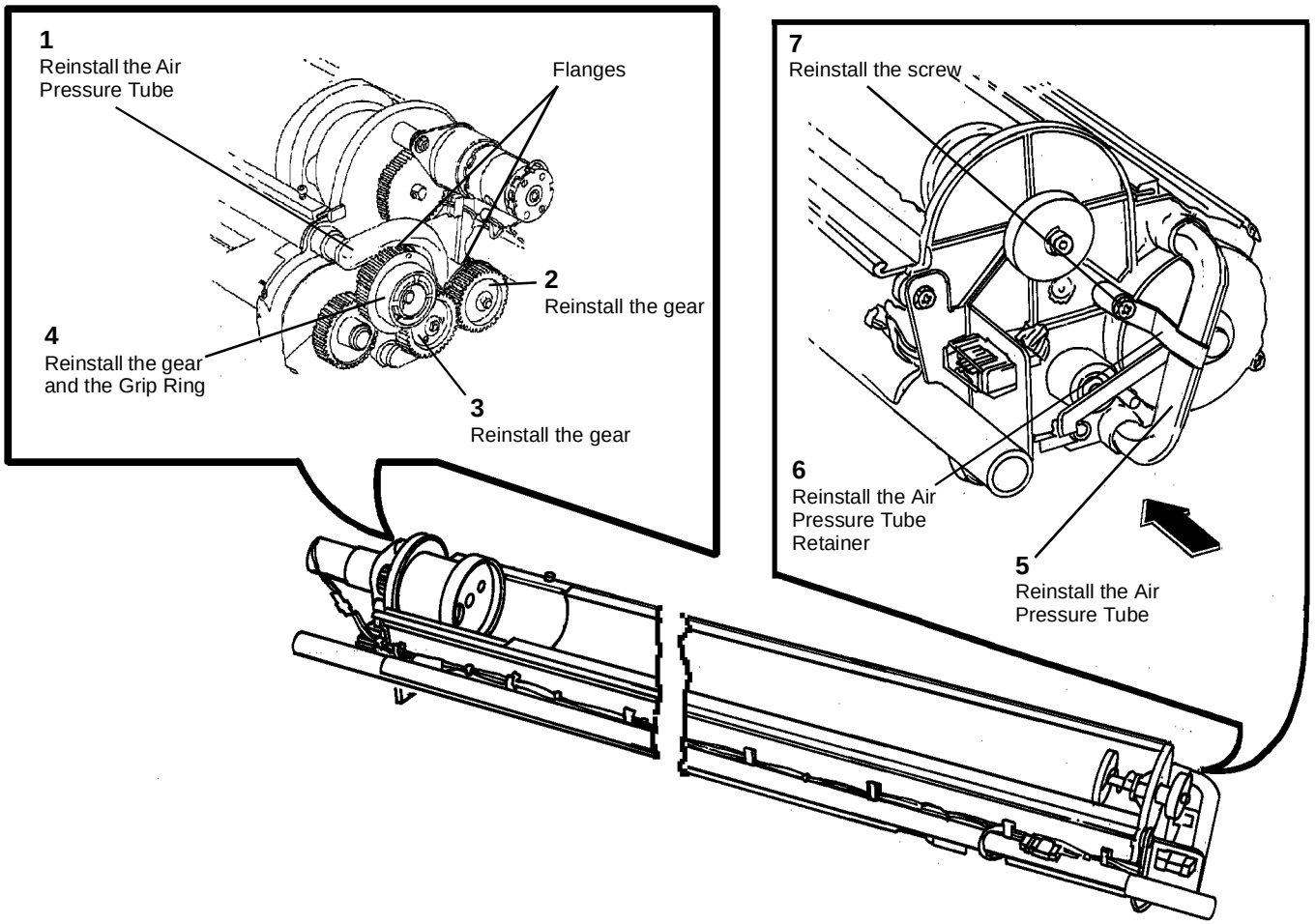


**Figure 5 Reinstalling the Air Pressure Tubes**

3. (Figure 6): Reinstall the Sump Shield in the Developer Module.

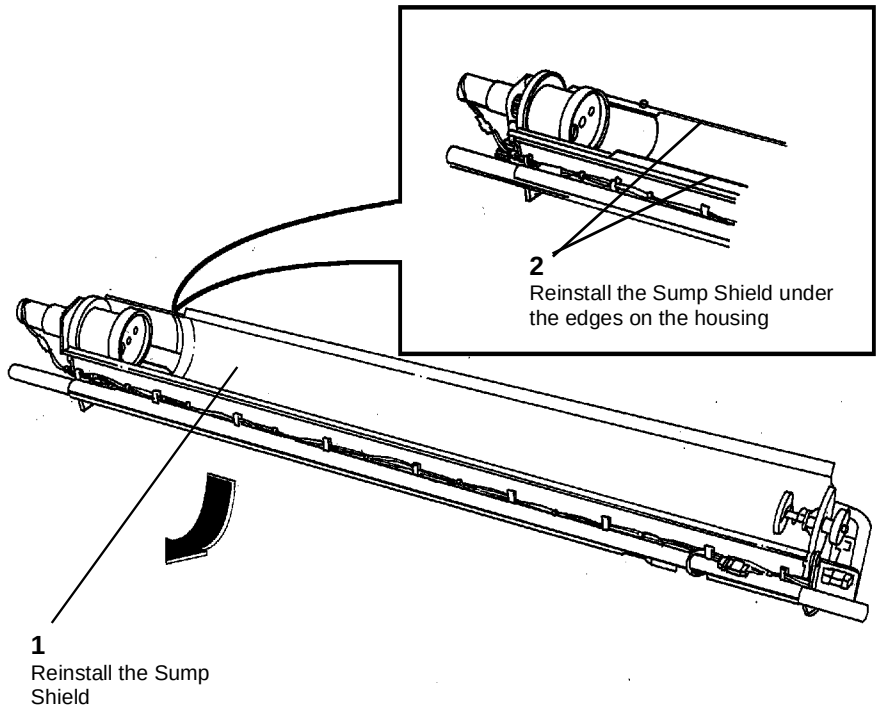


0101628A-RNO

**Figure 6 Reinstalling the Sump Shield in the Developer Module**

4. (Figure 7): Reinstall the Top Shield, taking care not to overtighten the screws.

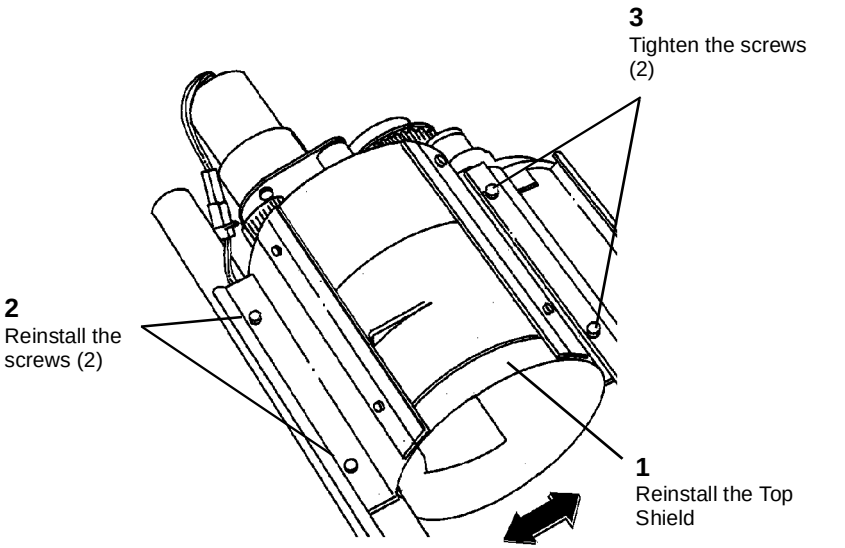


0101731A-RNO

**Figure 7 Reinstalling the Top Shield**

5. Reinstall the Developer Module (REP 9.5).

***NOTE:*** *To ensure that the Toner Cartridge is correctly engaged in the Drive Plate, rotate the cartridge in both directions.*

6. (Figure 8): Reinstall the Toner Cartridge.
7. If new Developer Material has been installed, perform Toner Sensor Calibration Code [09216].
8. Perform the Electrostatic Series (ADJ 9.2).

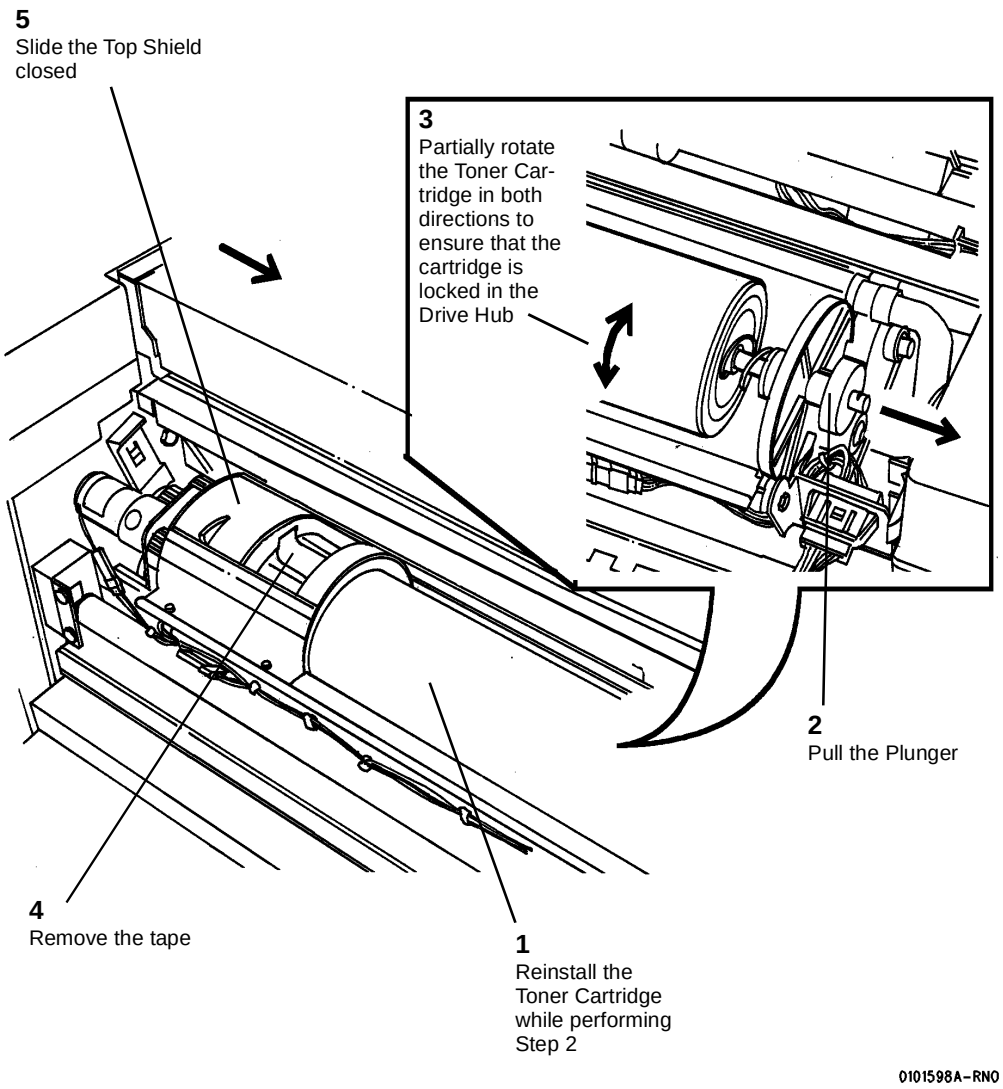


**Figure 8 Reinstalling the Toner Cartridge**

# REP 9.8 Scorotron Pin Kit

## Parts List on PL 9.3

***NOTE:*** *These are the instructions to install the Scorotron Pin Kit. The kit contains the following items:*

- *Pin Array*
- *Torsion Spring (2)*
- *Container*

**WARNING**

**Switch off the Main Power Switch. Disconnect the Power Cord.**

## Removal

1. Loosen the screws and open the Rear Cover.
2. Raise and latch the Top Cover.
3. Rotate the Image Module to the Service Position.
4. (Figure 1): Remove the Charge Scorotron Assembly from the Printer and place it on a flat surface.

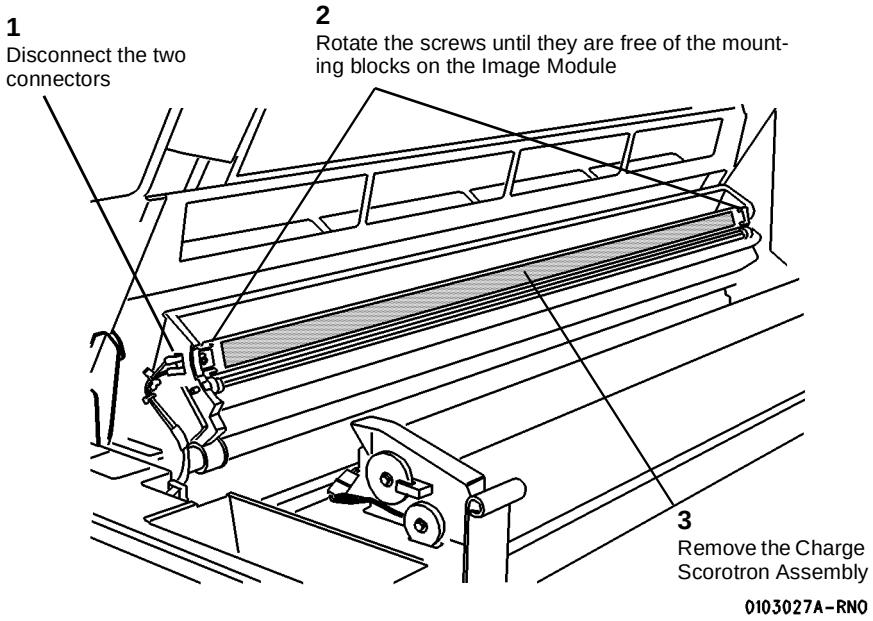


**Figure 1 Removing the Charge Scorotron Assembly**

5. (Figure 2): Remove the Grid Channel.

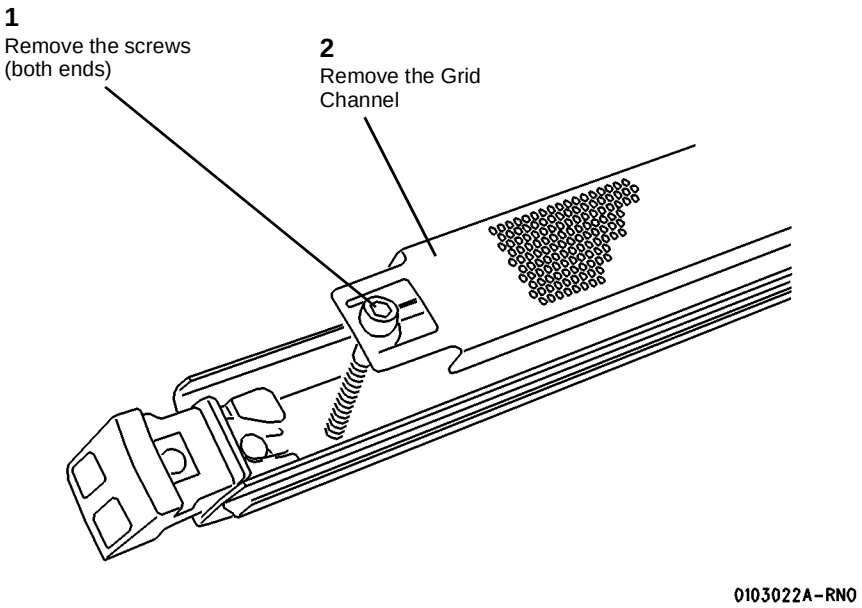


**Figure 2 Removing the Grid Channel**

**WARNING**

**Disposal of the Pin Array is carefully controlled because it is made of a Beryllium Copper alloy. Package the old Pin Array as a returned part. Also, be especially careful of the very sharp tips on the Pin Array.**

6. (Figure 3): Remove the Charge Scorotron Pin Array.
7. Remove the Torsion Springs from the End Blocks.

## Replacement

1. Install the Torsion Springs from the repair kit.

**CAUTION**

*Be careful not to damage the tips of the new Pin Array. Bent tips can cause Print Quality problems.*

2. Install the Pin Array from the repair kit into the End Blocks.
3. Reinstall the End Blocks into the Scorotron Extrusion. Ensure that the Pin Array is positioned in the Center Support (not shown) of the Scorotron Extrusion.
4. After completing the reassembly, package the Pin Array for return.

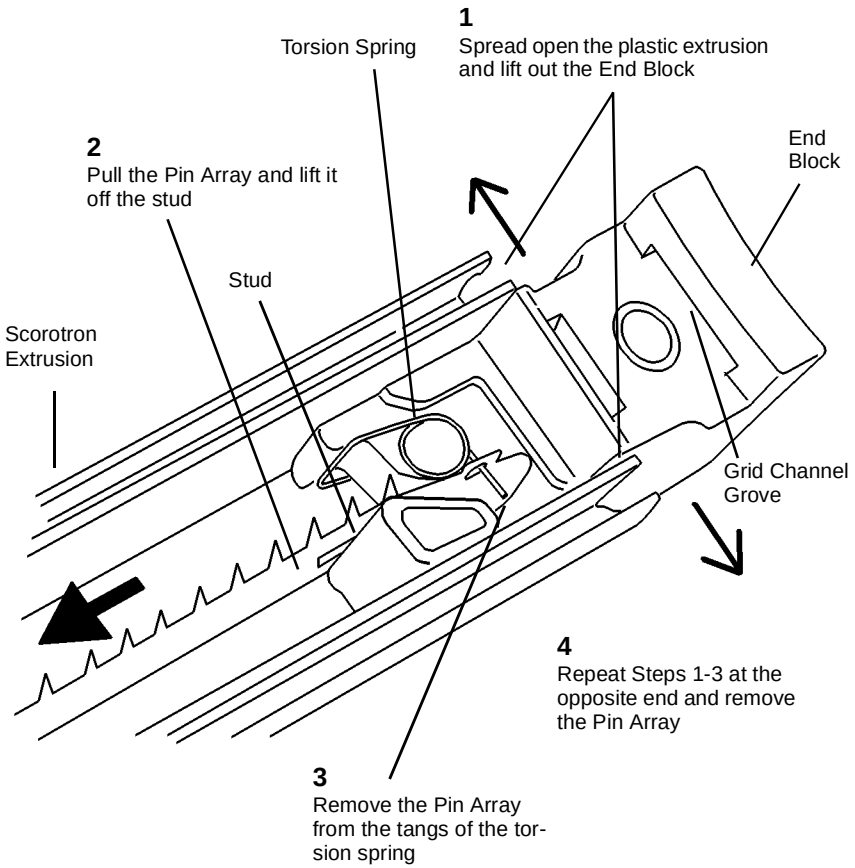


**Figure 3 Removing the Charge Scorotron Pin Array**

# REP 9.9 Transfer / Detack Corotron

**Parts List on PL 9.4**

## WARNING

**Switch off the Main Power Switch. Disconnect the Power Cord.**

***NOTE:*** *The art used for this procedure was developed for previous products and may not match the 8825/8830 configuration exactly.*

## Removal

1. Loosen the screws and open the Rear Cover.
2. (Figure 1): Lower the Media Transport Cover and remove the Transfer / Detack Corotron.

## Replacement

1. Reinstall the Transfer / Detack Corotron against the bottom of the channel, away from the Heat Roll.

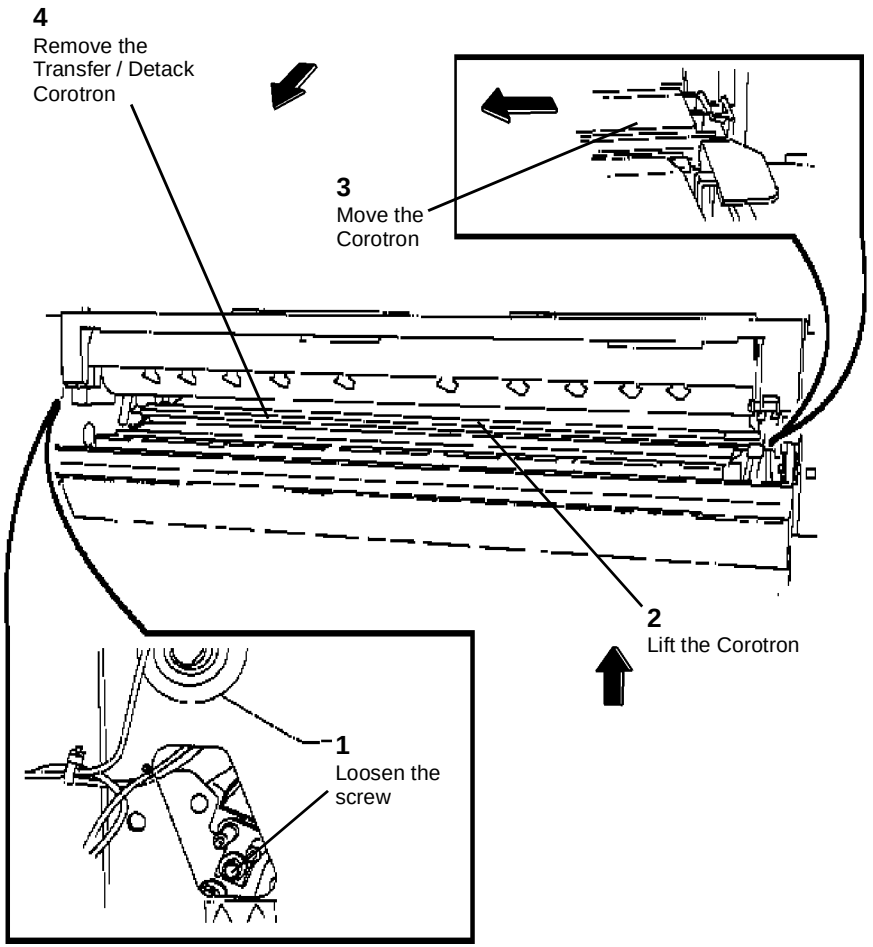


0101991A-RNO

**Figure 1 Removing the Transfer/Detack Corotron**

# REP 9.11 Toner Sensor

## Parts List on PL 9.9

**WARNING**

**Switch off the Main Power Switch. Disconnect the Power Cord.**

***NOTE:*** *The art used for this procedure was developed for previous products and may not match the 8825/8830 configuration exactly.*

### Removal

1. Remove the Developer Module (REP 9.5).

**CAUTION**

*The Developer Material must be removed before removing the Toner Sensor, or there will be a mess.*

2. Remove the Developer Material (REP 9.7).
3. (Figure 1): Remove the Toner Sensor and the spacer.

### Replacement

1. Reinstall the Toner Sensor and spacer.

**CAUTION**

*If a new Toner Sensor is being installed, new Developer Material must be installed.*

2. Reinstall the Developer Material (REP 9.7).

**CAUTION**

*Do not run prints before calibrating the Toner Sensor. Running prints before performing the calibration may cause toner faults or print defects.*

3. If a new Toner Sensor has been installed, perform Toner Sensor Calibration Code [09216].
4. Perform the Electrostatic Series (ADJ 9.2).

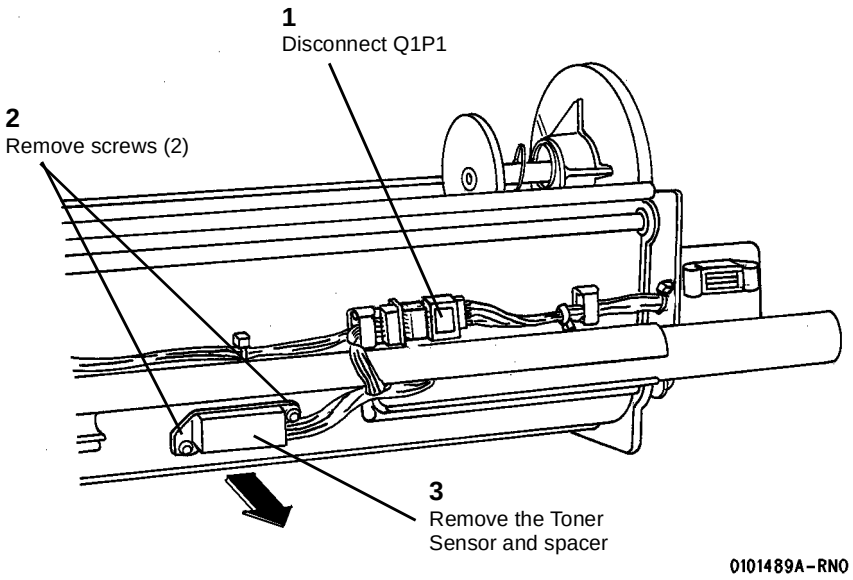


**Figure 1 Removing the Toner Sensor**

# REP 9.12 Toner Cartridge Home Sensor

**Parts List on PL 9.9**

**WARNING**

**Switch off the Main Power Switch. Disconnect the Power Cord.**

***NOTE:*** *The art used for this procedure was developed for previous products and may not match the 8825/8830 configuration exactly.*

## Removal

1. Remove the Developer Module (REP 9.5).
2. Remove the Cartridge Drive Plate (REP 9.14).

***NOTE:*** *The Toner Home Sensor is threaded. The wires must be straightened in order to rotate the sensor for removal.*

3. (Figure 1): Remove the Toner Cartridge Home Sensor.

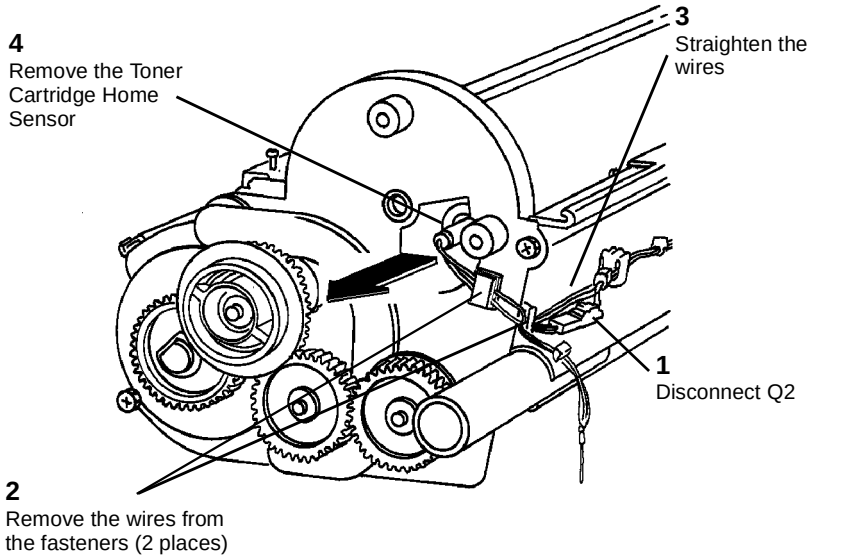


**Figure 1 Removing the Toner Cartridge Home Sensor**

## Replacement

1. Reinstall the Toner Cartridge Home Sensor.
2. Perform the Toner Cartridge Home Sensor Adjustment (ADJ 9.5).

**CAUTION**

*To avoid damage to the Drive Plate Seal, always rotate the drive plate in the direction shown in Figure 2.*

3. (Figure 2): Reinstall the Cartridge Drive Plate.

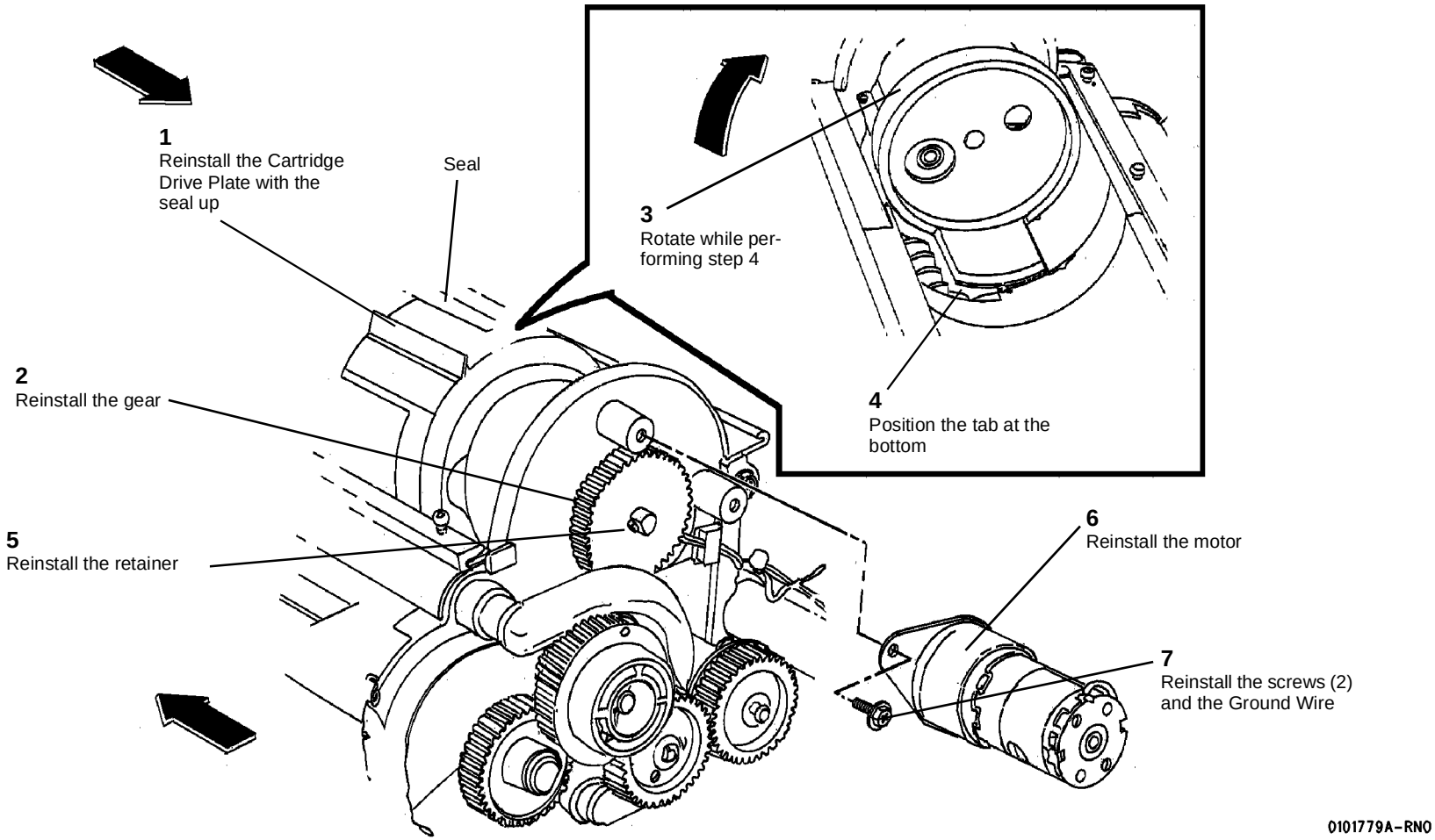


**Figure 2 Reinstalling the Cartridge Drive PLate**

4. (Figure 3): Reinstall the Top Shield, taking care not to overtighten the screws.

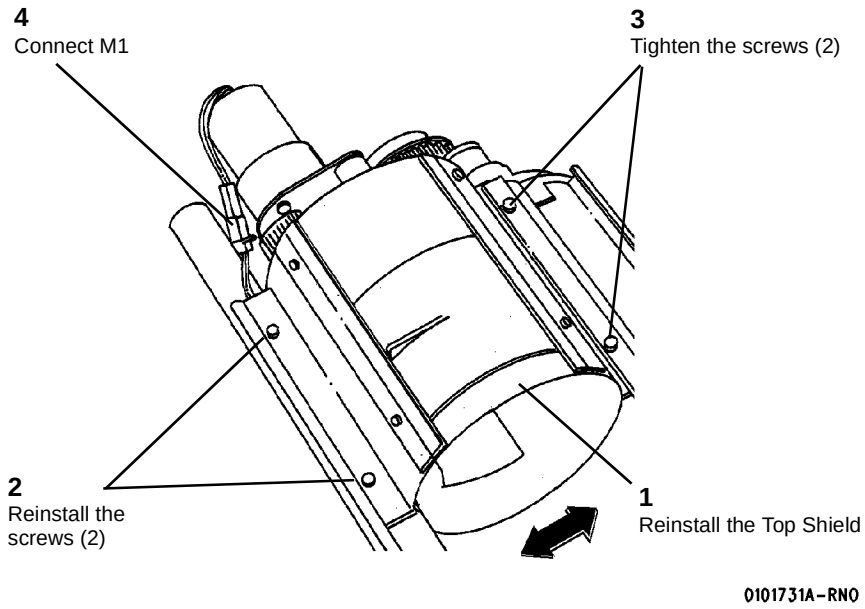


**Figure 3 Reinstalling the Top shield**

5. Reinstall the Developer Module (REP 9.5).

# REP 9.13 Sump Shield

## Parts List on PL 9.9

**WARNING**

**Switch off the Main Power Switch. Disconnect the Power Cord.**

***NOTE:*** *The art used for this procedure was developed for previous products and may not match the 8825/8830 configuration exactly.*

## Removal

1. Remove the Developer Module (REP 9.5).

2. (Figure 1): Remove the Sump Shield.

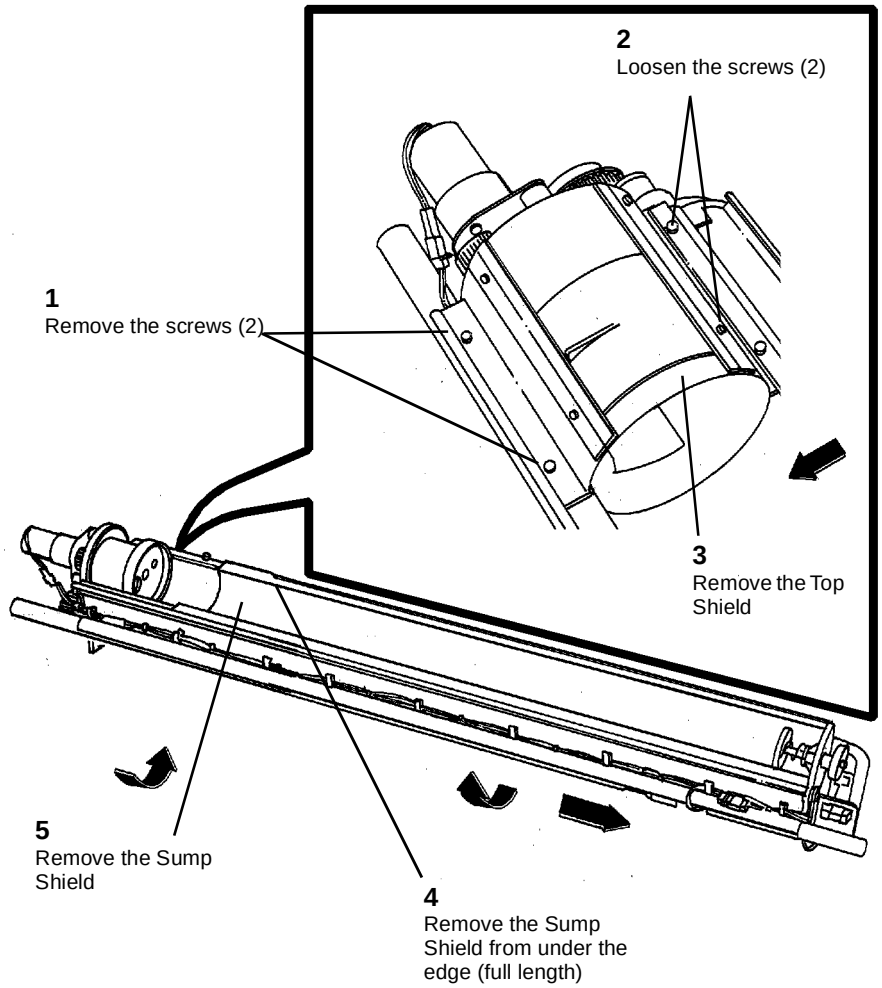


**Figure 1 Removing the Sump Shield from the Developer Module**

## Replacement

**CAUTION**

*Ensure that the full length of the edge of the Sump Shield is under the edge of the housing.*

1. (Figure 2): Reinstall the Sump Shield in the Developer Module.

# REP 9.14 Cartridge Drive Plate

**Parts List on PL 9.9**

**WARNING**

**Switch off the Main Power Switch. Disconnect the Power Cord.**

***NOTE:*** *The art used for this procedure was developed for previous products and may not match the 8825/8830 configuration exactly.*

## Removal

1. Remove the Developer Module (REP 9.5).

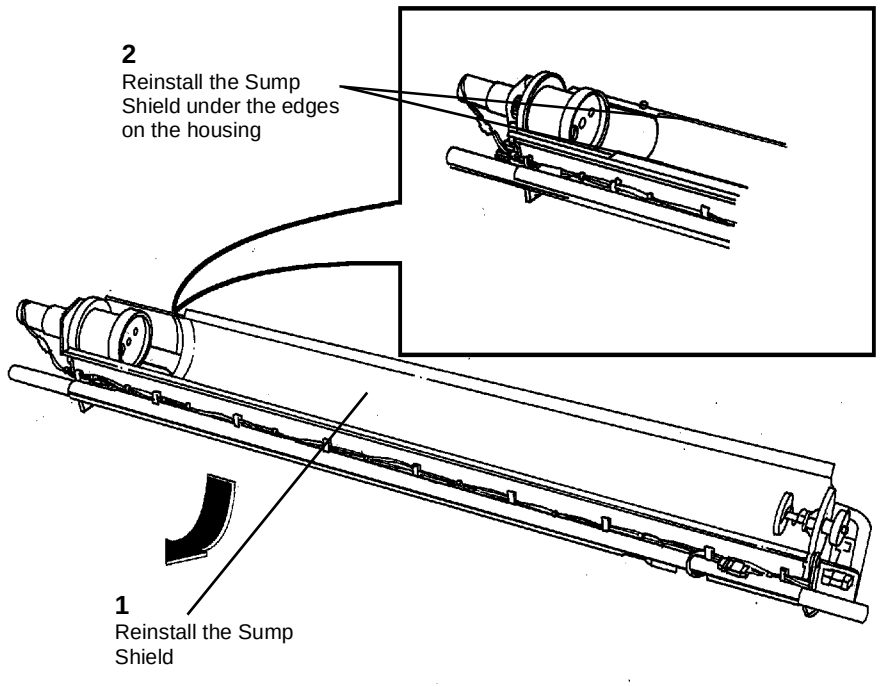


**Figure 2 Reinstalling the Sump Shield in the Developer Module**

2. (Figure 1): Remove the Cartridge Drive Plate.

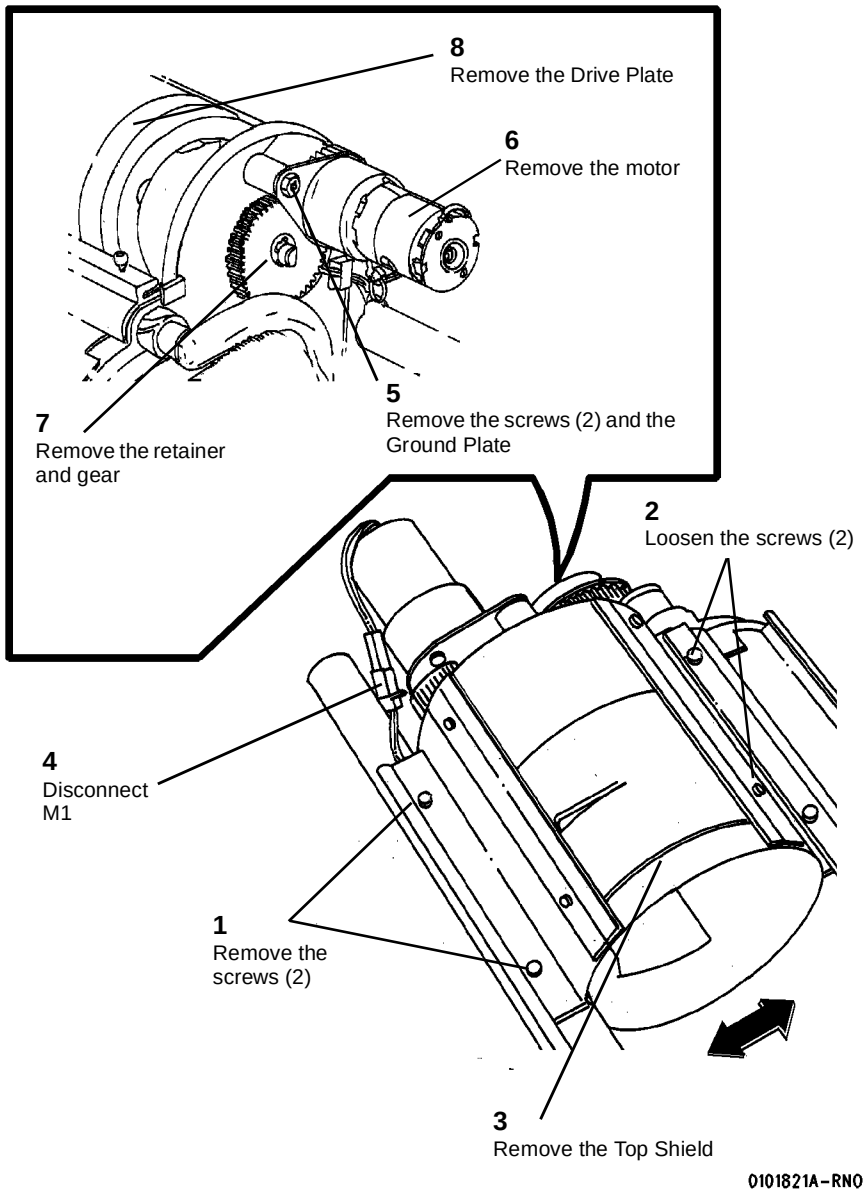


**Figure 1 Removing the Cartridge Drive Plate**

## Replacement

**CAUTION**

*To avoid damage to the Drive Plate Seal, always rotate the drive plate in the direction shown in Figure 2.*

1. (Figure 2): Reinstall the Cartridge Drive Plate.

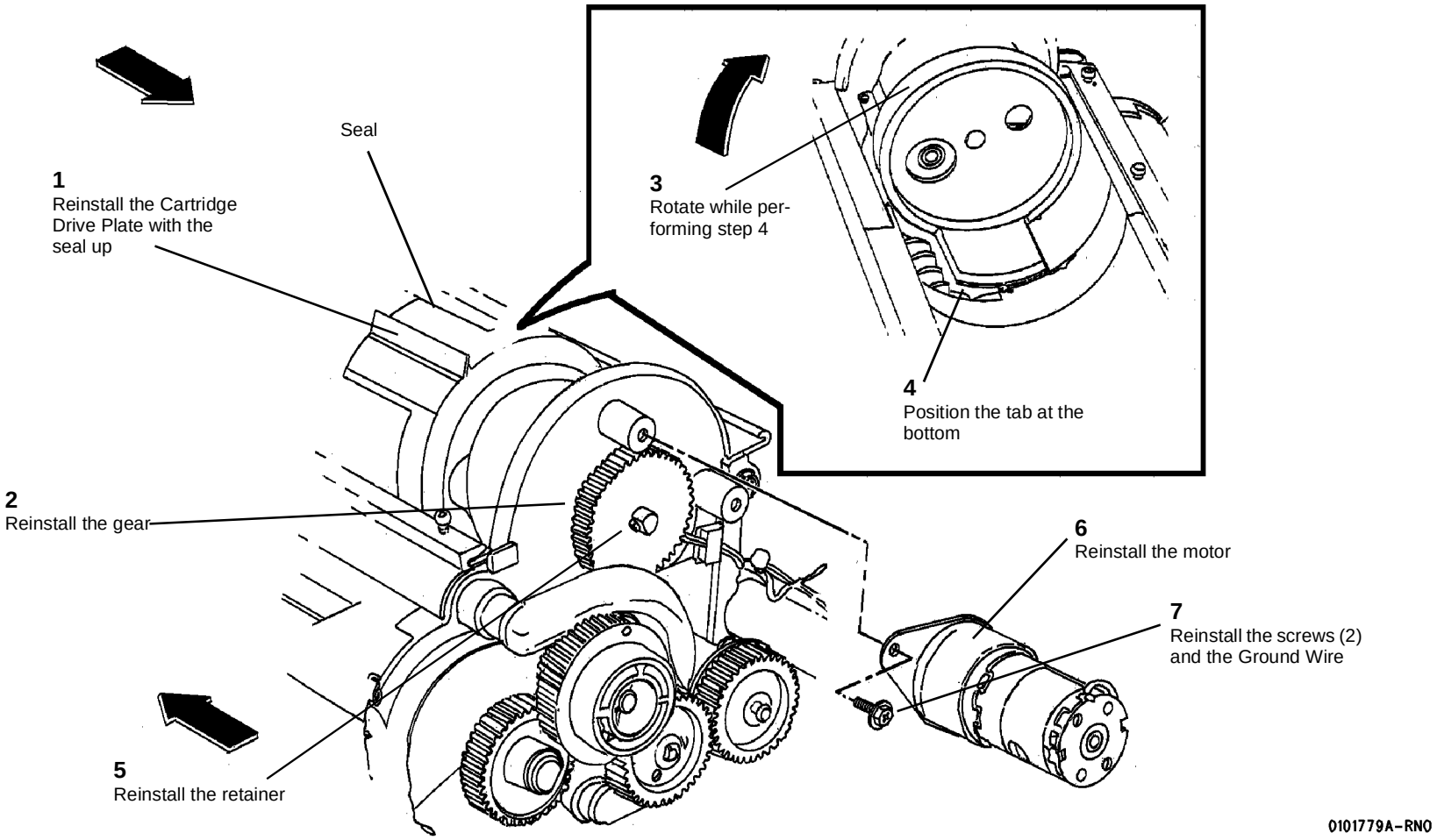


**Figure 2 Reinstalling the Cartridge Drive Plate**

2. (Figure 3): Reinstall the Top Shield, taking care not to overtighten the screws.

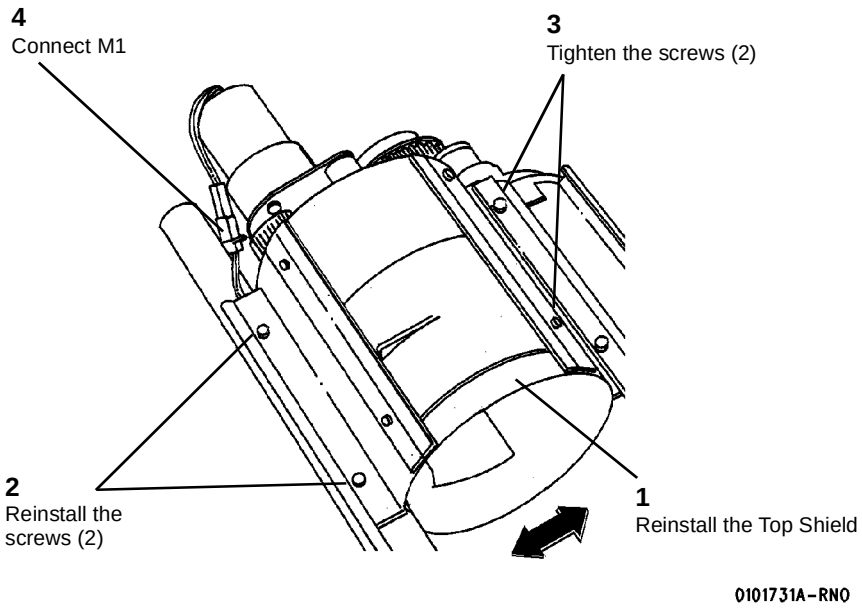


**Figure 3 Reinstalling the Top Shield**

3. Reinstall the Developer Module.

# REP 9.17 Photoreceptor Seal

**Parts List on PL 9.5B**

**WARNING**

**Switch off the Main Power Switch. Disconnect the Power Cord.**

## Removal

1. Remove the Drum Assembly (REP 9.2).
2. (Figure 1): Remove the Right-hand Seal, the Left-hand Seal (not shown), and the Photoreceptor Seal.
3. Thoroughly clean the Photoreceptor Seal channel using a vacuum cleaner.

## Replacement

1. Replace the Photoreceptor Seal.
   a. Carefully fold the Photoreceptor Seal along the perforations.
   b. Slide the Photoreceptor Seal into the channel, smaller side up, so that the edge of the Photoreceptor Seal forms a seal with the inside lip of the channel.
   c. Using a soft, straight tool (a piece of shimstock works well), carefully push the seal into the channel, across the entire width of the Xerographic Module.
2. Reinstall the Right-hand Seal.
   a. Insert the red stripe end of the Right-hand Seal underneath the fold of the Photoreceptor Seal.
   b. Install the seal fuzzy side up.
   c. Ensure that the seal is flush against the Xerographic Module Frame.
3. Reinstall the Left-hand Seal in the same manner.

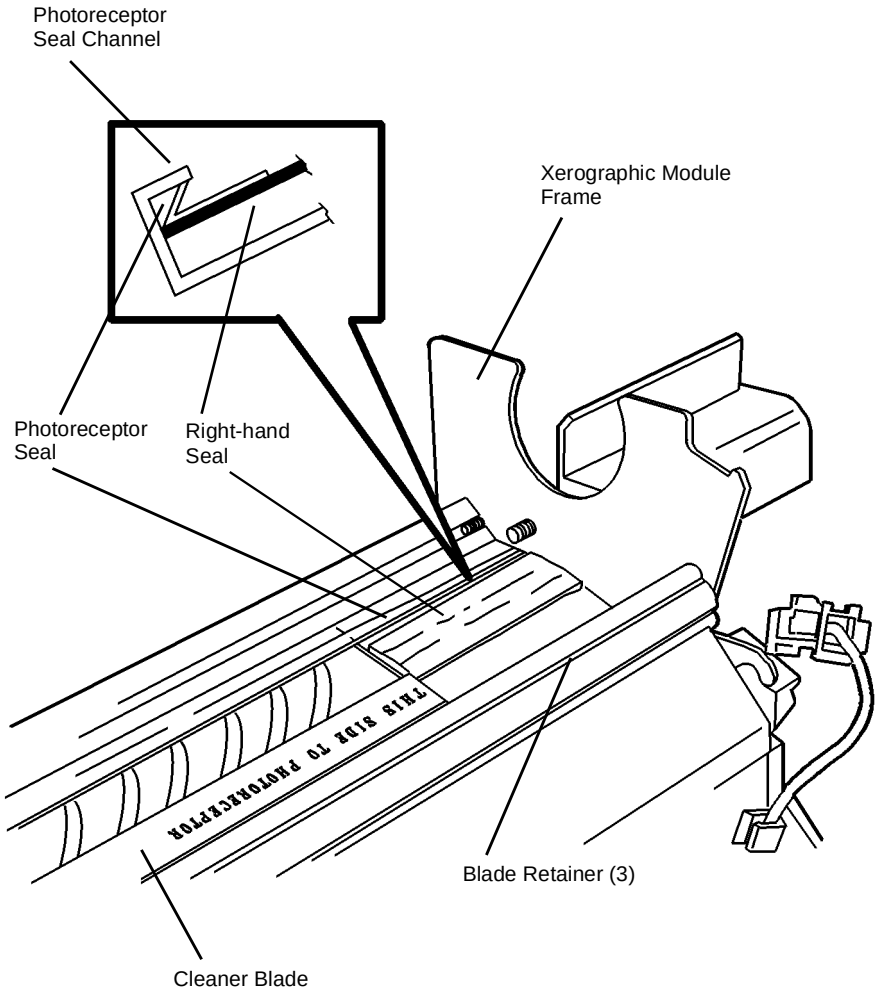


**Figure 1 Removing and Replacing the Photoreceptor Seal**

# REP 9.18 Air Pressure Tubes

**Parts List on PL 9.9, PL 9.10**

## WARNING

**Switch off the Main Power Switch. Disconnect the Power Cord.**

***NOTE:*** *The art used for this procedure was developed for previous products and may not match the 8825/8830 configuration exactly.*

## Removal

1. Remove the Developer Module (REP 9.5).

## CAUTION

*Do not rotate the Auger Gears individually more than the slight amount required for removal or to mesh the teeth during reinstallation. If the factory setting of the augers is changed during the procedure, perform the adjustment procedure, Augers (ADJ 9.6).*

2. (Figure 1): Remove the Air Pressure Tubes.
3. Using a vacuum cleaner, remove the impacted Developer Material from the Housing where the Air Pressure Tubes are attached. Pay special attention to the inside of the bottom channel.

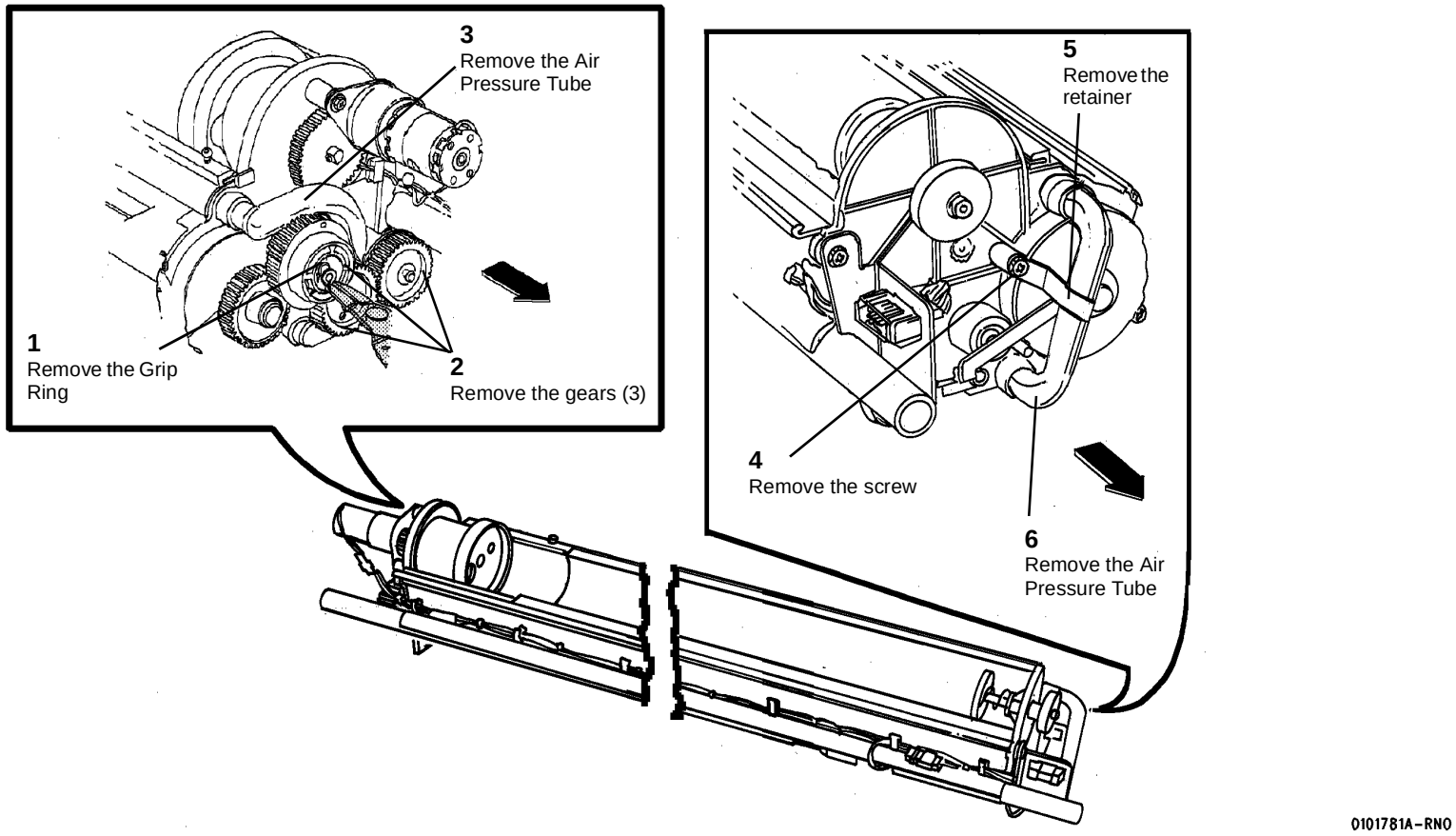


**Figure 1 Removing the Air Pressure Tubes**

## Replacement

**CAUTION**

*Do not rotate the Auger Gears individually more than the slight amount required for removal or to mesh the teeth during reinstallation. If the factory setting of the augers is changed during the procedure, perform the adjustment procedure, Augers (ADJ 9.6).*

***NOTE:** The gears must be reinstalled with the flanges as shown in order to ensure that all the gears are secured.*

1. (Figure 2): Reinstall the Air Pressure Tubes.

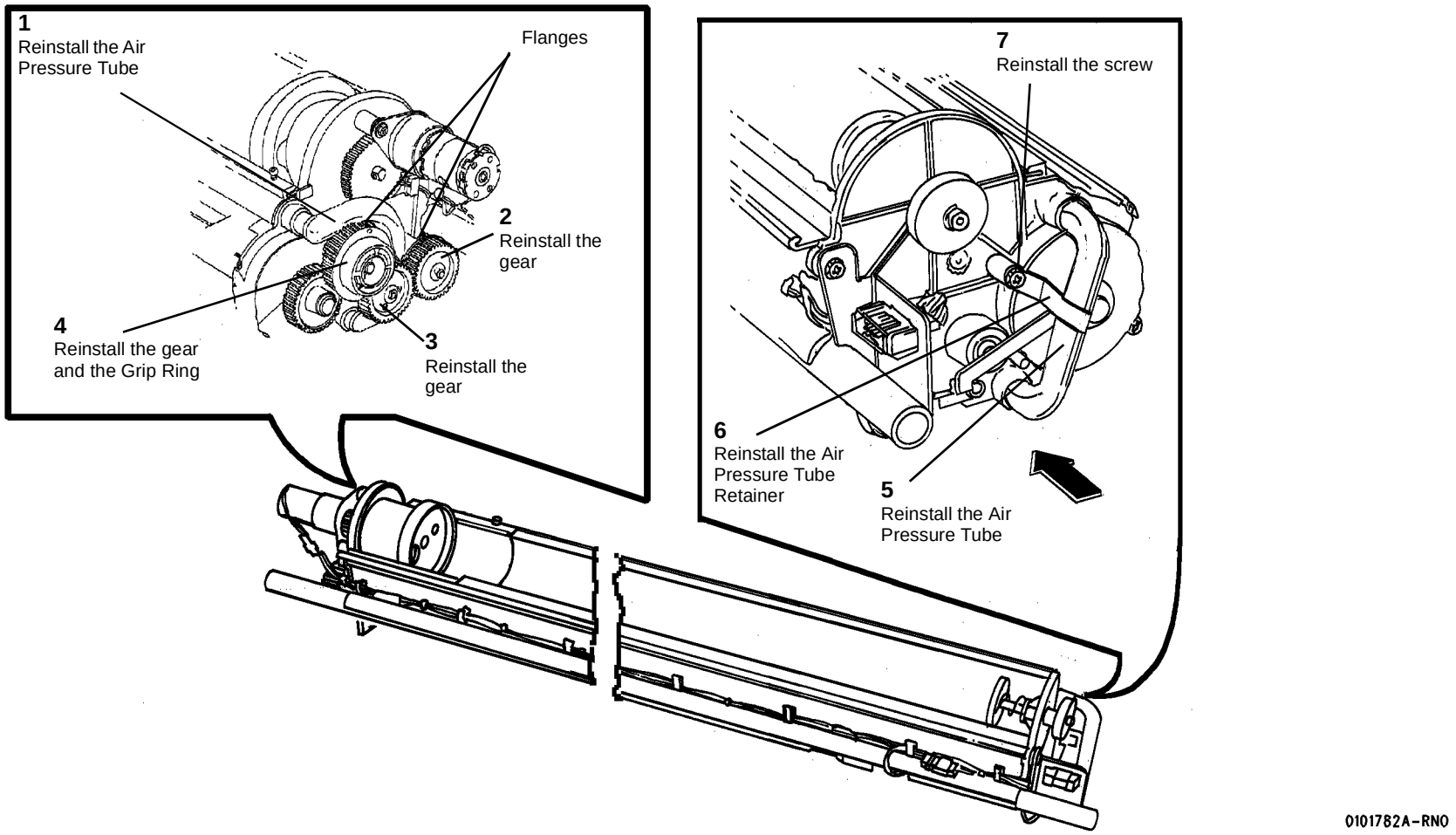


**Figure 2 Reinstalling the Air Pressure Tubes**

# REP 9.19 Roller Kit

## Parts List on PL 9.3

***NOTE:*** *These are the instructions to install Roller Kit 600K58740. The kit contains the following items:*

- *Rollers (2)*
- *Pins (2)*

**WARNING**

**Switch off the Main Power Switch. Disconnect the Power Cord.**

### Removal

1. Raise and secure the Top Cover.
2. Open the Image Module.
3. (Figure 1): Using pliers, pull out the pin and remove the roller.

### Replacement

1. Replace the roller and pin with parts from the kit.
2. Repeat the procedure at the rear of the Image Module.

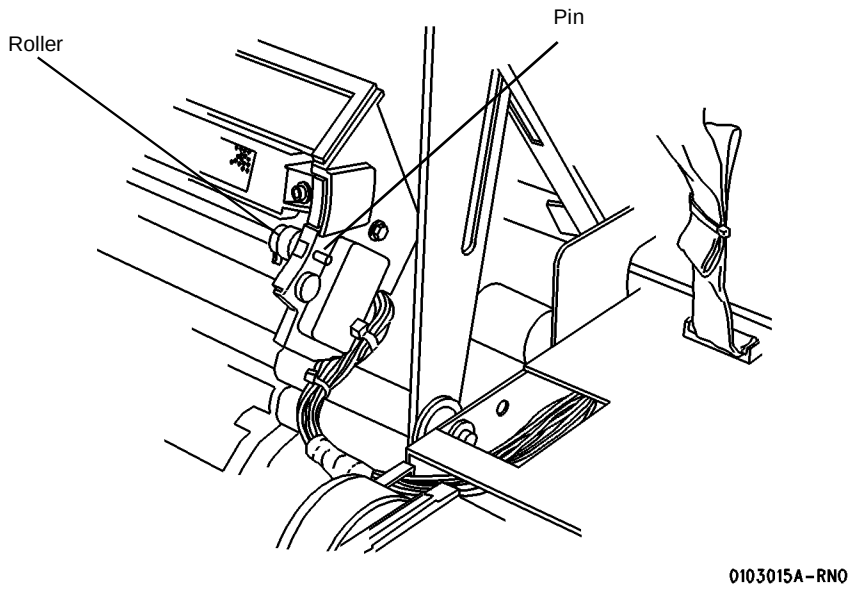


**Figure 1 Removing the Front Roller**

# REP 9.20 Image Module

## Parts List on PL 9.3

***NOTE:*** *These are the instructions to install the Image Module Assembly Kit 600K58760. The kit contains the following:*

- *Image Module Assembly*

**WARNING**

**Switch off the Main Power Switch. Disconnect the Power Cord.**

### Removal

1. Remove the Developer Module (REP 9.5).
2. Remove the Developer Baffle (PL 9.8).
3. Remove the following:
   a. Rear Door (PL 14.1)
   b. Front Door (PL 14.2)
   c. Right Side, Left Lower Cover (PL 14.2)
   d. Right Side, Right Lower Cover (PL 14.2)
   e. Right Side, Left Cover (three screws, two top, one bottom) (PL 14.2)
   f. Right Side, Right Cover (three screws, one top, two bottom) (PL 14.2)
4. Remove the High Voltage Power Supply (REP 3.2).

***NOTE:*** *In the following steps, cut cable ties as necessary in order to remove the harness.*

5. (Figure 1): Prepare to remove the Top Cover (Front).

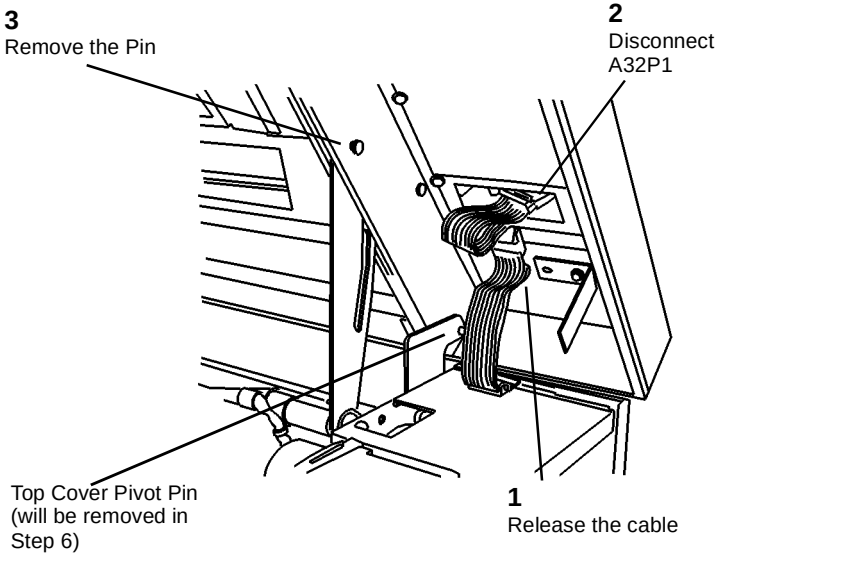


**Figure 1 Preparing to Remove the Top Cover (Front)**

***NOTE:*** *(Figure 2): Observe the way that the Top Cover Pivot Pin engages the hole in the Interlock Plate. This may be a difficult area during reassembly.*

6. Close the Top Cover, open the Developer Module Cover, and remove the two pivot pins shown in Figure 1 andFigure 2.

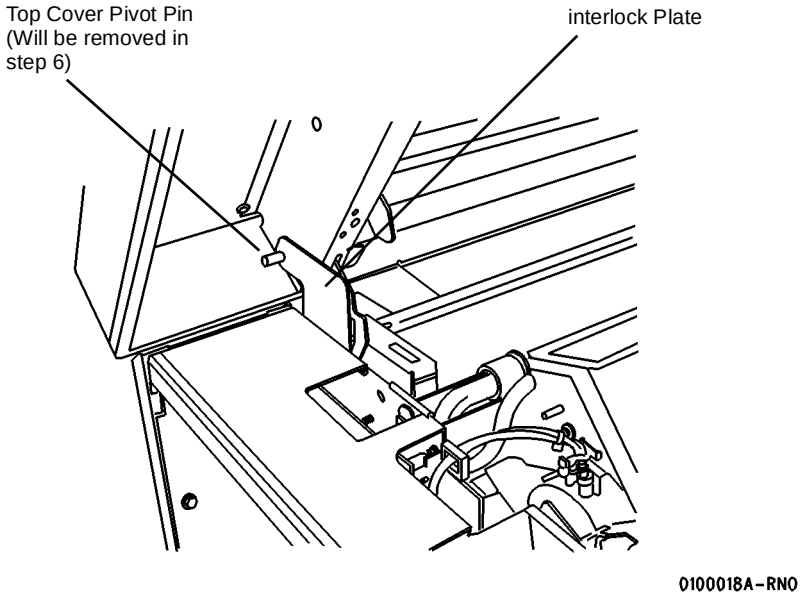


**Figure 2 Top Cover Interlock Plate**

7. Close the Developer Module Cover and lift off the Top Cover, being careful to disengage the small pin from the Interlock Plate.
8. Open the Cutter Drawer.

9. (Figure 3): Disconnect the Video Cable Connector J307A from the Main PWB and push the connector through the hole in the frame.

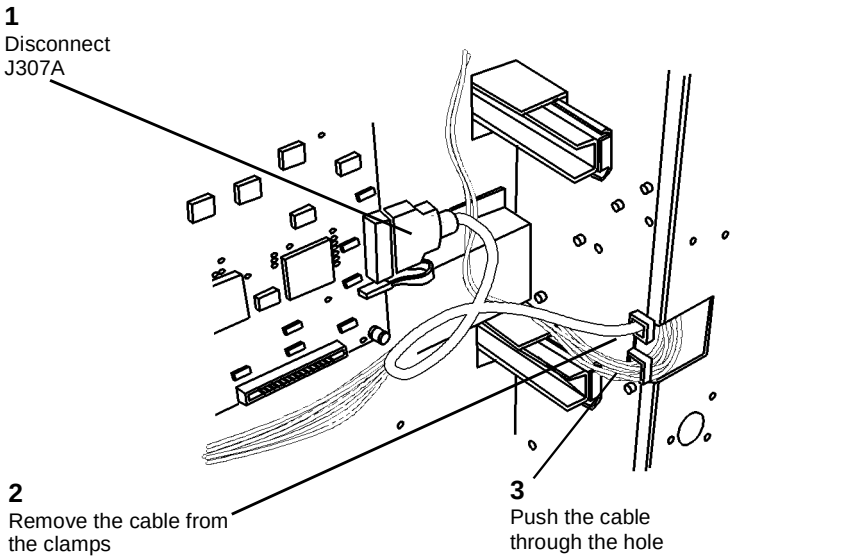


**Figure 3 Disconnecting the video cable**

10. (Figure 4): Release the Video Cable from the cable clamps and push it through the hole in the frame.

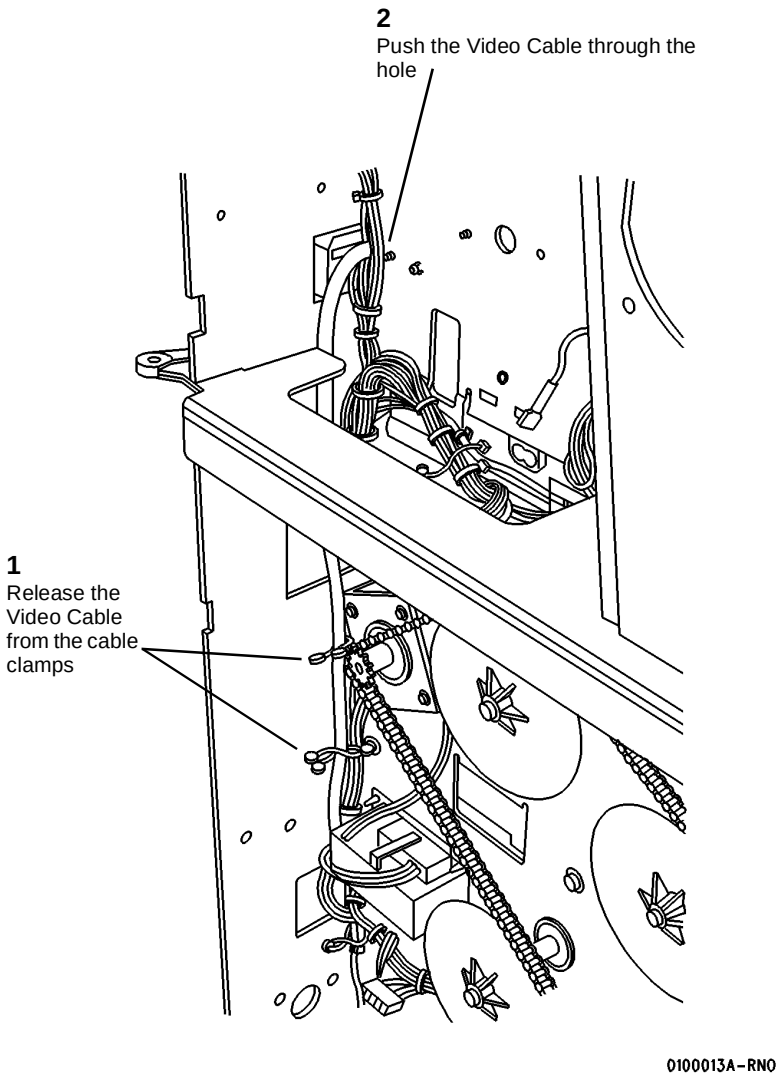


**Figure 4 Preparing the Video Cable for Removal**

11. (Figure 5): Release the Video Cable from the cable clamps and pull it through the hole in the frame.

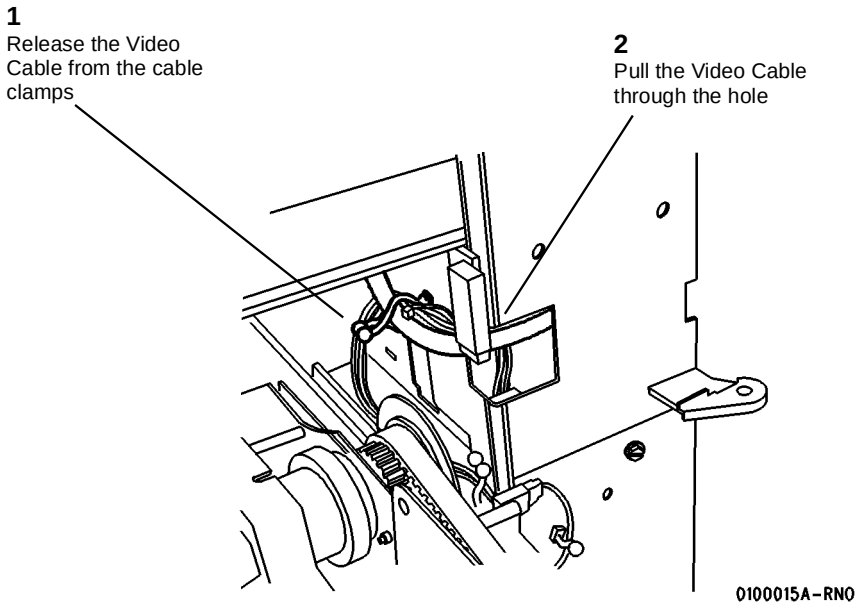


**Figure 5 Preparing the Video Cable for Removal**

12. (Figure 6): Continue to pull the Video Cable through the hole after releasing it from the cable guides.

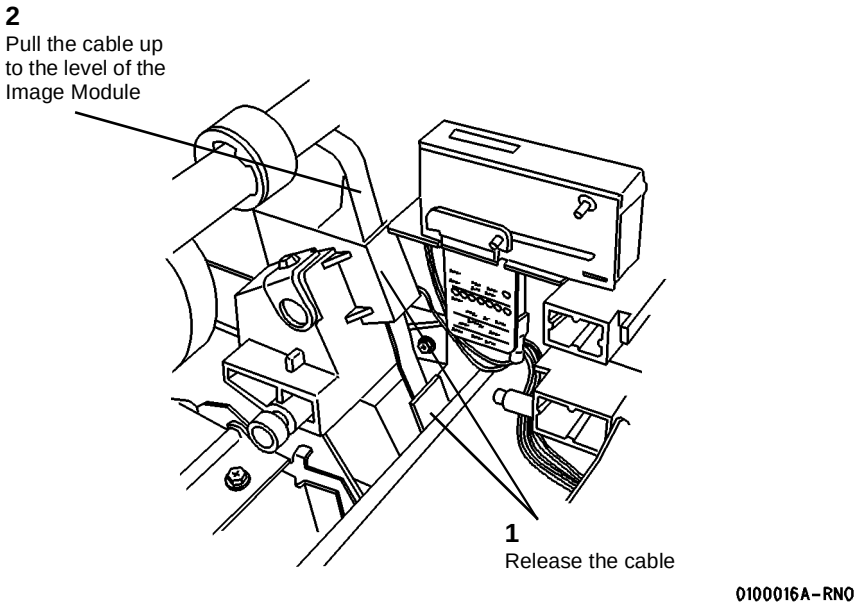


**Figure 6 Preparing the Video Cable**

13. (Figure 7): Disconnect A5P2 from the Low Voltage Power Supply and release the harness from the cable clamps.

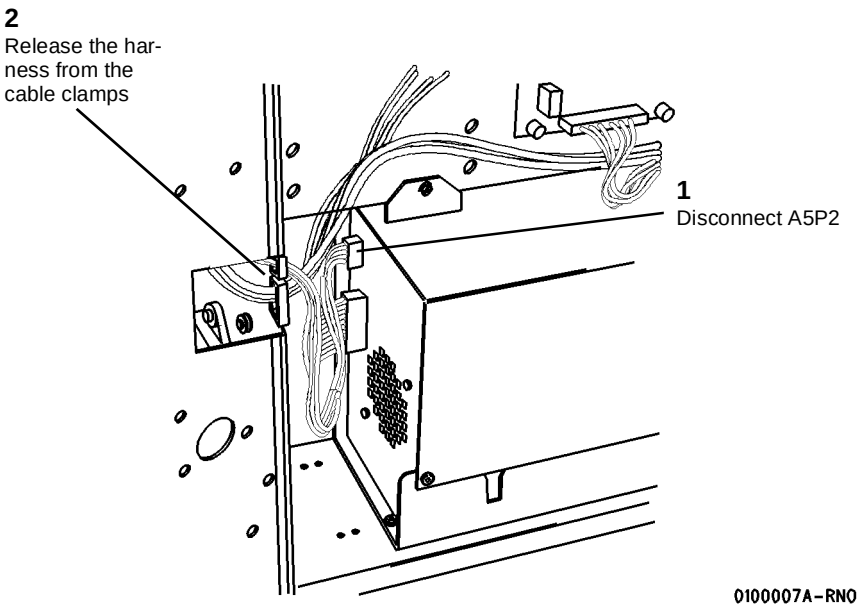


**Figure 7 Preparing the Harness for Removal**

14. (Figure 8): Disconnect the Ground Wire and release the harness from the cable clamps.

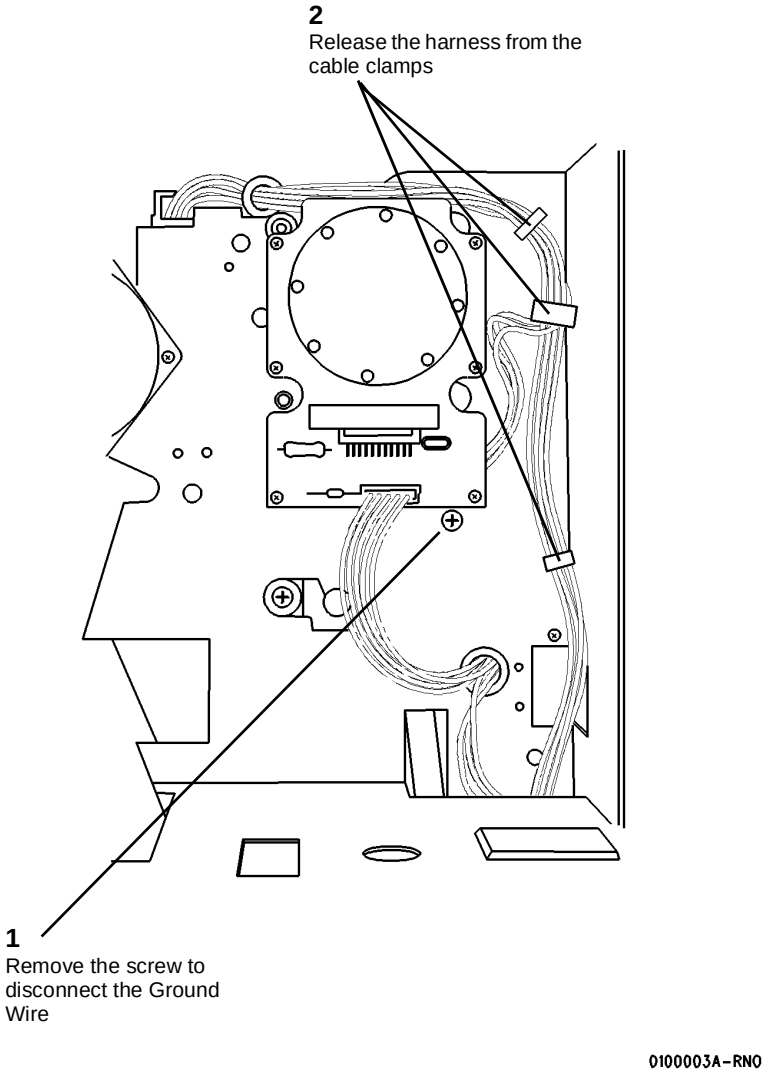


**Figure 8 Preparing the Harness for Removal**

***NOTE:*** *Observe the way that the spring rests on the frame, underneath the cable clamp. This is how the reassembled parts must fit.*

15. (Figure 9): Complete the removal preparation on the front area of the Image Module Assembly.

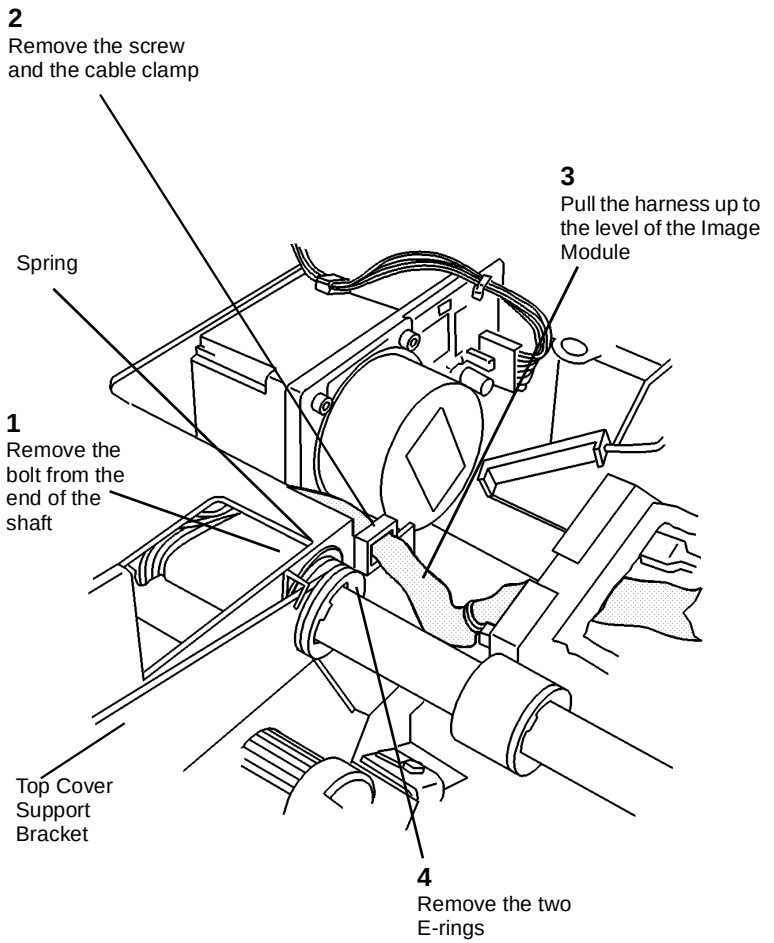


**Figure 9 Preparing to Remove the Image Module Assembly (View looking at the Front from the Right Side)**

16. (Figure 10): Continue to pull the Video Cable through the hole after releasing it from the cable guides.

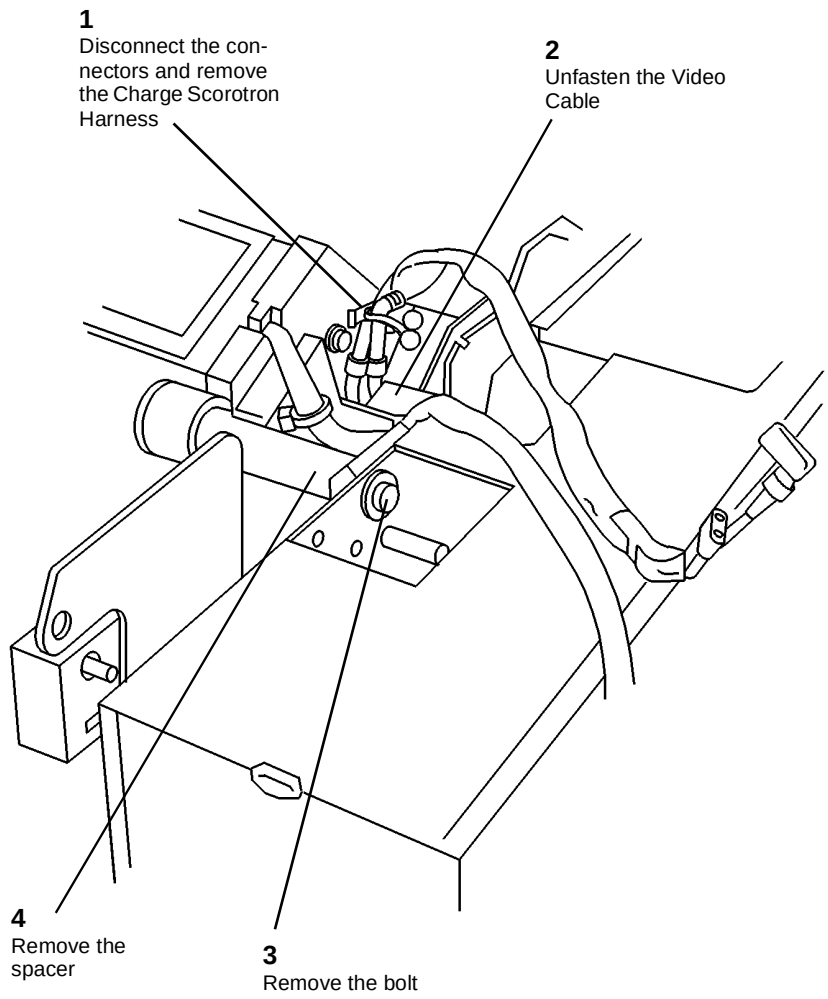


**Figure 10 Preparing to Remove the Image Module Assembly (View looking at the Rear from the Right Side)**

17. Lift out the Image Module Assembly / Pivot Bar combination.

## Replacement

1. Reverse the removal steps for replacement of the Image Module Assembly.
2. Perform Electrostatic Series (ADJ 9.2).

# REP 10.1 Heat Rod

**Parts List on PL 10.2**

## WARNING

**Switch off the Main Power Switch. Disconnect the Power Cord. Allow the Fuser Assembly to cool before the procedure is performed.**

## Removal

1. Remove the Stripper Finger Assembly.
2. Perform the Xerographic Module procedure (REP 9.1) through Step 11. This will leave the Xerographic Module at the Service Position, handles installed, and the Drum Assembly removed.

***NOTE:*** *In the following steps, "Left" and "Right" describe machine locations as observed when you are facing the Xerographic Module at the left side of the Printer.*

3. (Figure 1): Disconnect the Heat Rod (Right Side).

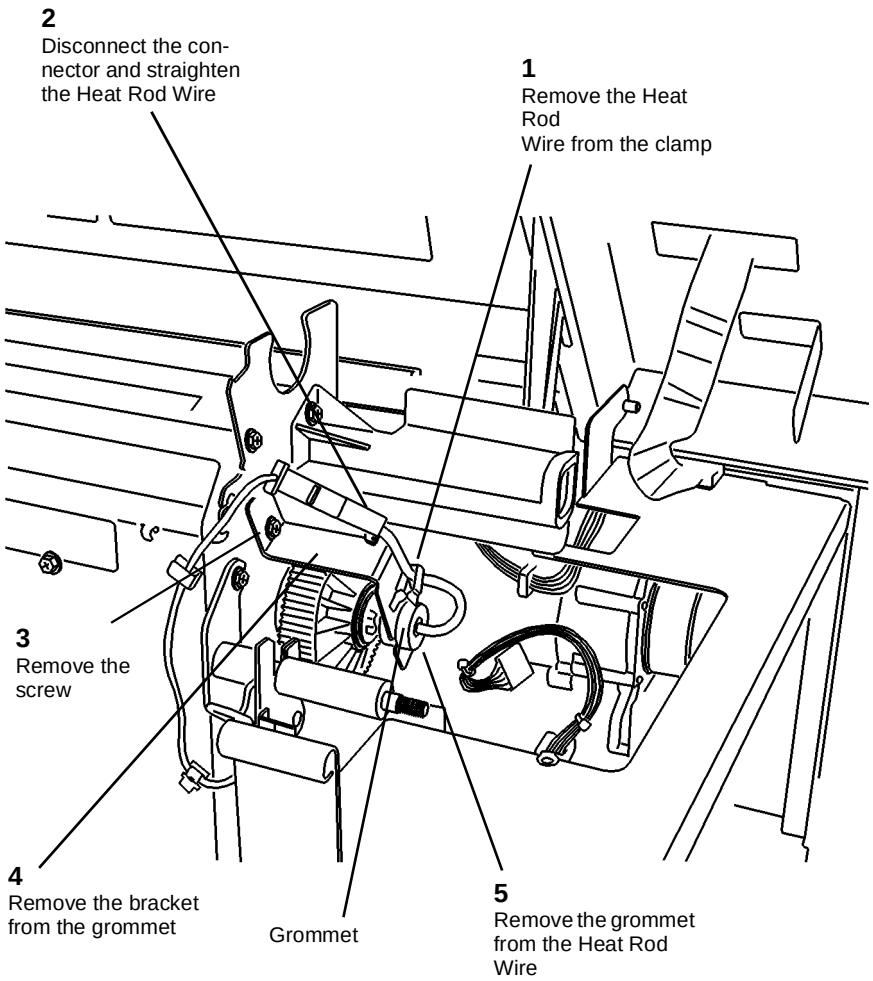


**Figure 1 Removing the Bracket and Grommet (Right Side)**

4. (Figure 2): Disconnect the Heat Rod and remove the bracket (Left side).

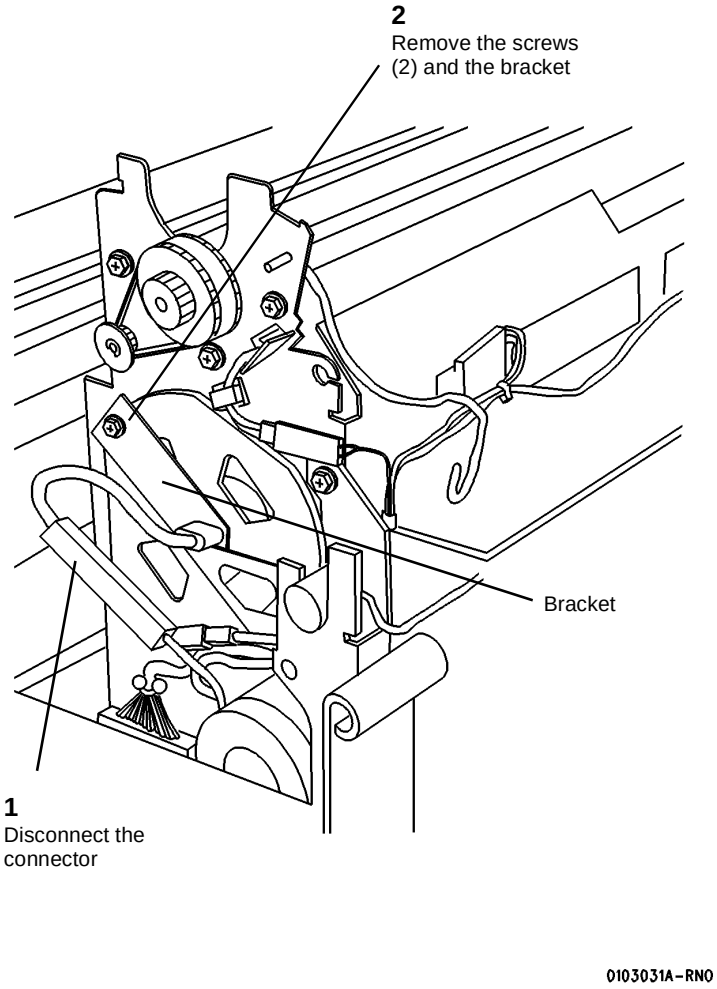


**Figure 2 Removing the Bracket (Left side)**

**CAUTION**

*Wear gloves or wrap a sheet of paper around the Heat Rod when handling the Heat Rod. Do not touch the glass section of the Heat Rod. Oil from fingers can cause damage to the Heat Rod.*

5. (Figure 3): Remove the Heat Rod.

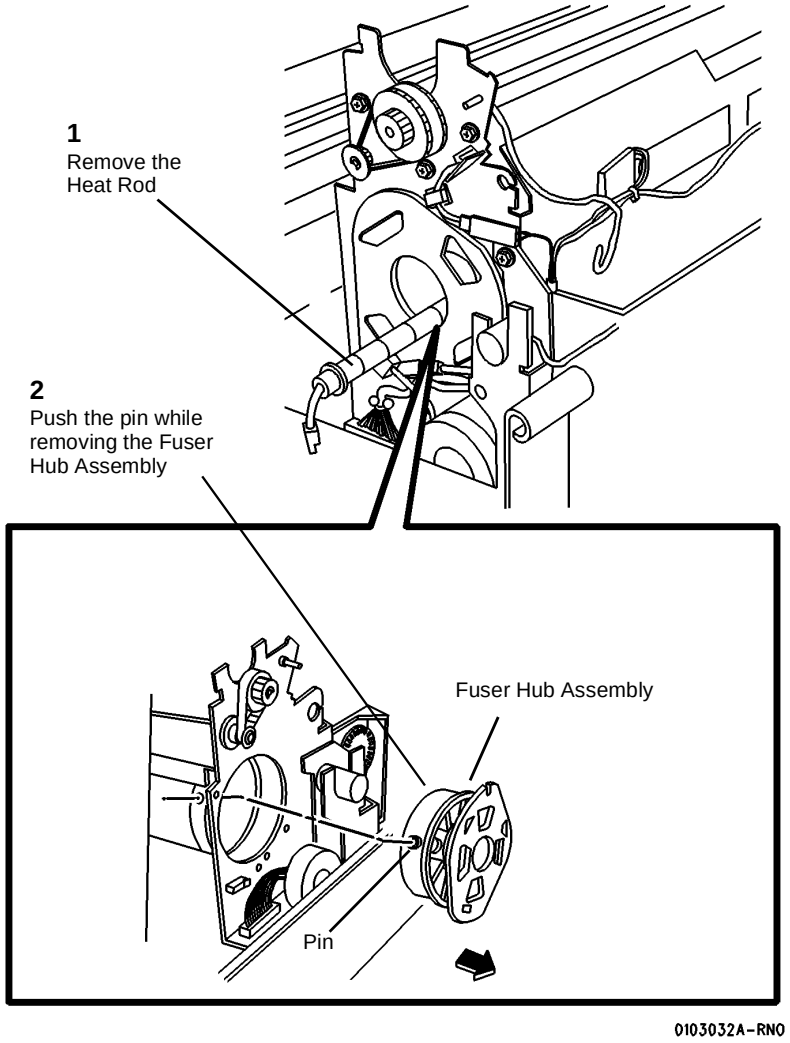


**Figure 3 Removing the Heat Rod and Fuser Hub Assembly**

## Replacement

**CAUTION**

*Wear gloves or wrap a sheet of paper around the Heat Rod when handling the Heat Rod. Do not touch the glass section of the Heat Rod. Oil from fingers can cause damage to the Heat Rod.*

1. (Figure 4): Reinstall the Heat Rod.

***NOTE:*** *Do not remove the connectors from the wires on the ends of the Heat Rod.*

a. Insert the red connector into the Heat Roll.
b. While looking into the roll, push the red connector through the hole in the Fuser Drive Gear at the opposite end.
c. If the previous step is too difficult, use the rod that secures the Fabric Guide as a tool. Insert that rod through the right side of the Heat Roll, secure the red connector to it, and pull the Heat Rod through the Heat Roll.

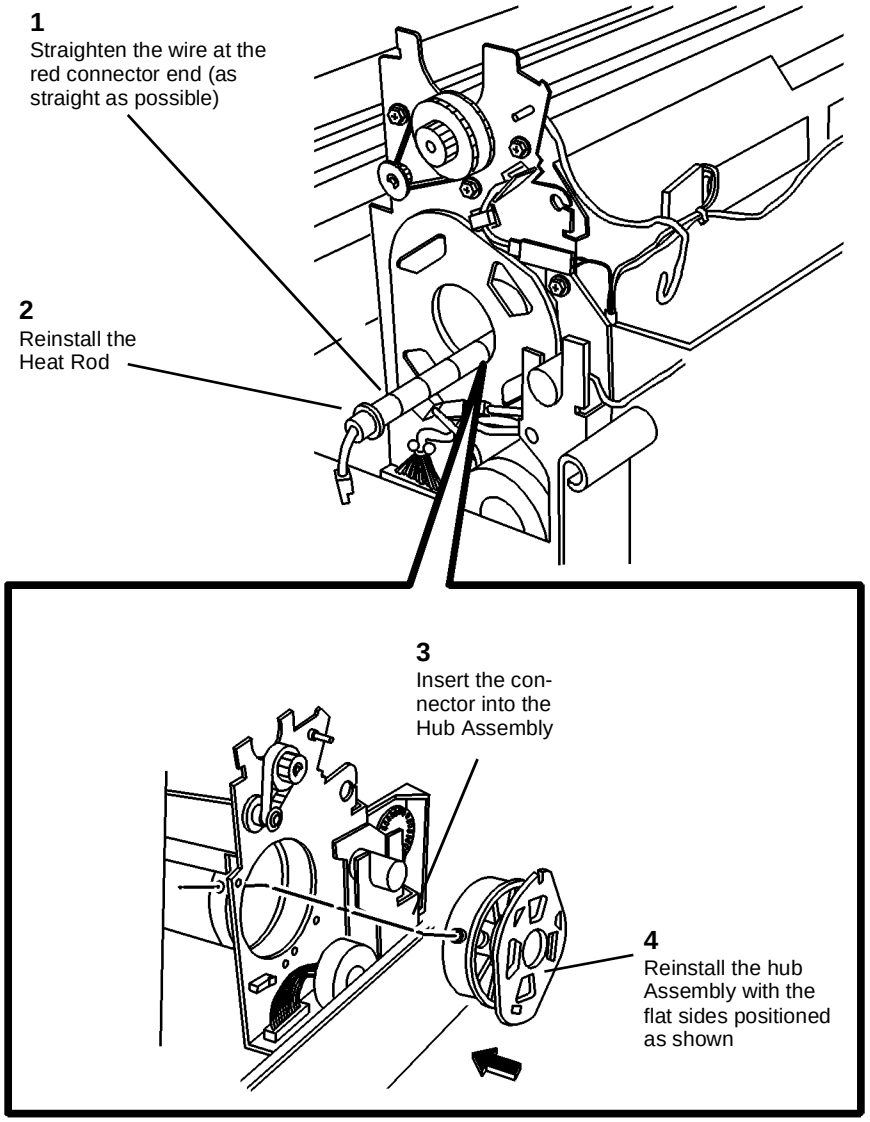


**Figure 4 Reinstalling the Heat Rod**

2. (Figure 5): Reinstall the bracket (Left side).

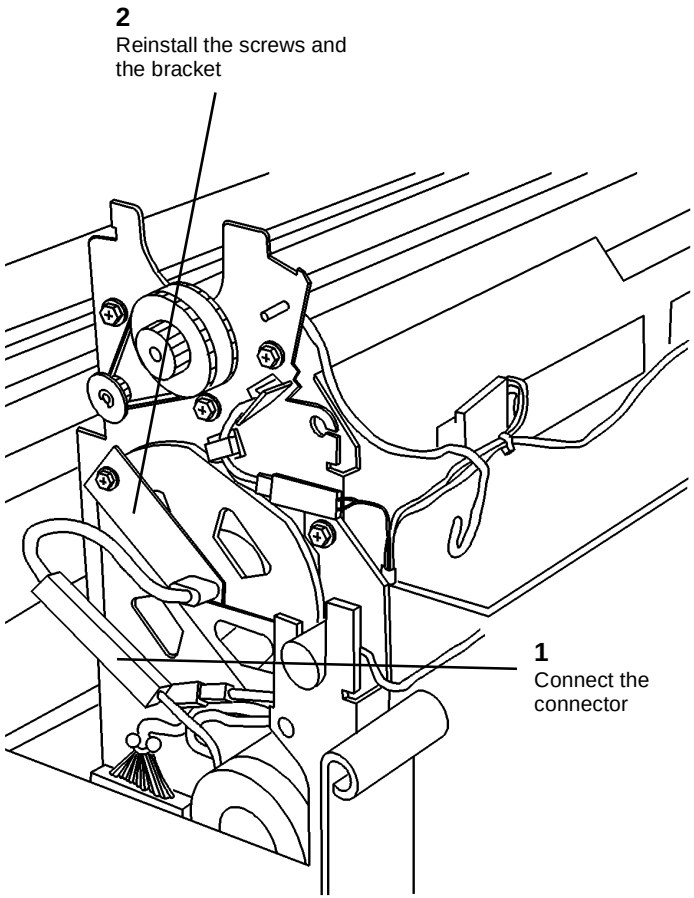


**Figure 5 Reinstalling the Bracket (Left side)**

3. (Figure 6): Reinstall the grommet and the bracket (Right side).

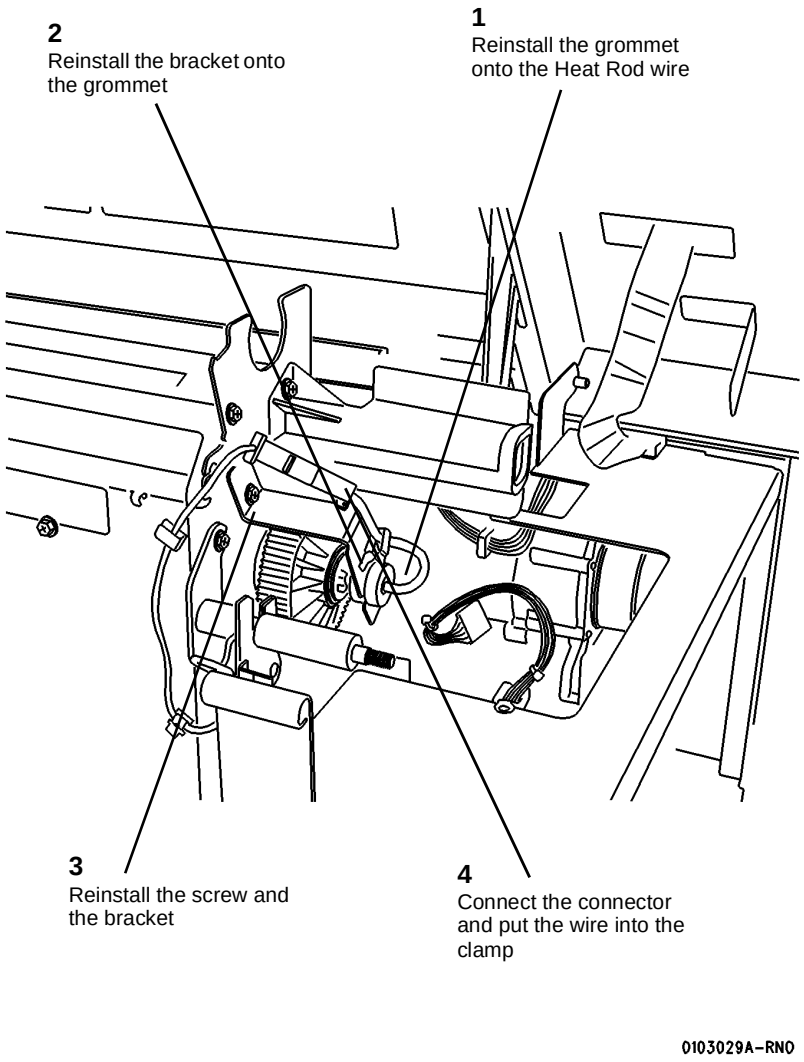


**Figure 6 Reinstalling the Bracket (Right side)**

4. Ensure that the Thermistor Pad is clean.

# REP 10.2 Heat Roll

**Parts List on PL 10.2**

**WARNING**

**Switch off the Main Power Switch. Disconnect the Power Cord. Allow the Fuser Assembly to cool before the procedure is performed.**

***NOTE:*** *The art used for this procedure was developed for previous products and may not match the 8825/8830 configuration exactly.*

## Removal

1. Remove the Stripper Finger Assembly.
2. Perform the Xerographic Module procedure (REP 9.1) through Step 11. This will leave the Xerographic Module at the Service Position, handles installed, and the Drum Assembly removed.
3. Remove the Heat Rod (REP 10.1).

**WARNING**

**Wear protective gloves when handling parts with silicone oil on them. Do not allow silicone oil to contact your eyes. Silicone oil can cause severe eye irritation. Wash your hands immediately after handling any component covered with silicone oil.**

4. (Figure 1): Remove the Heat Roll.

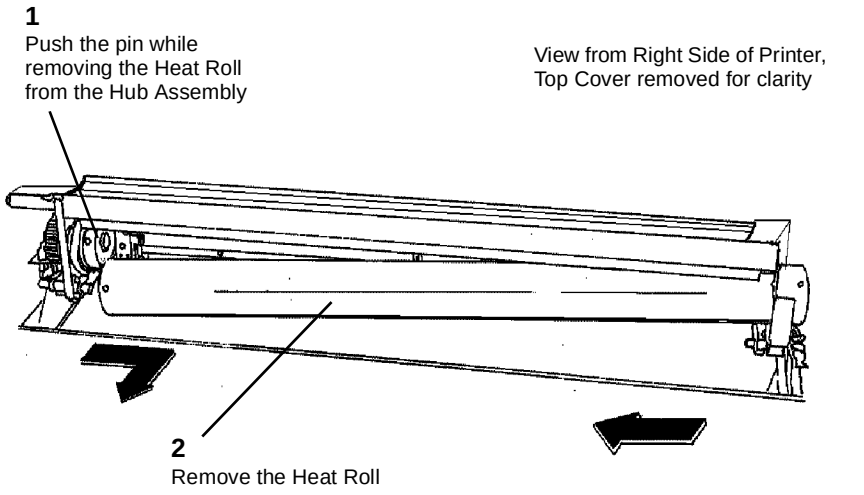


**Figure 1 Removing the Heat Roll**

# REP 10.3 Fuser Triac

**Parts List on PL 1.2A**

**WARNING**

**Switch off the Main Power Switch. Disconnect the Power Cord.**

## Removal

1. Remove the two Right Side Covers.
2. (Figure 1): Remove the Fuser Triac.

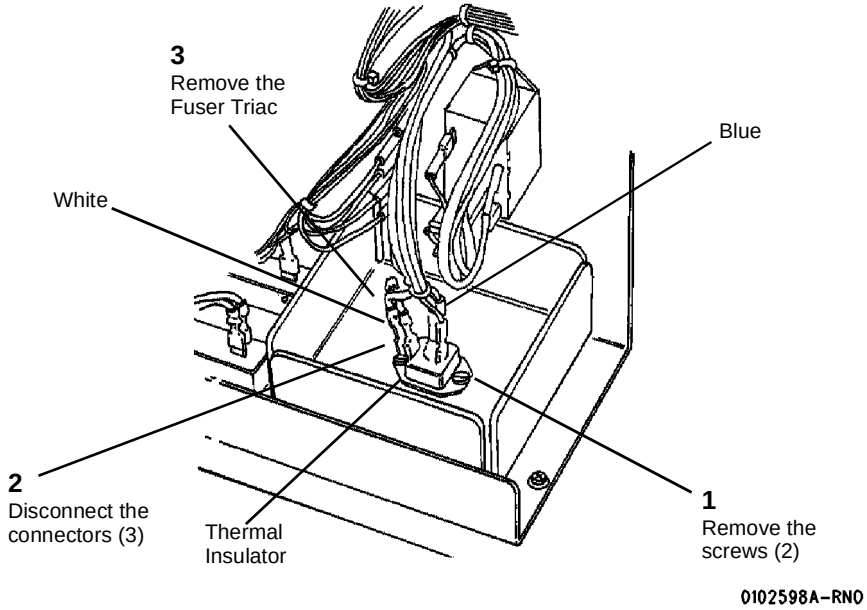


**Figure 1 Removing the Fuser Triac**

## Replacement

1. Cover the entire surface where the Fuser Triac mounts to the frame with a film of thermal compound or install a new Thermal Insulator.

# REP 10.7 Web Oiler Assembly

**Parts List on PL 9.6**

**WARNING**

**Switch off the Main Power Switch. Disconnect the Power Cord.**

## Removal

1. Loosen the screws and open the Rear Door.
2. Raise and latch the Top Cover.
3. Ensure that there is a clean, flat surface on which to place the Web Oiler Assembly after it is removed.
4. (Figure 1): Remove the Web Oiler Assembly and place it top down, resting on the handles, on a flat surface.

## Replacement

1. At reinstallation, engage the rear lip of the Web Oiler Housing over the metal bracket of the Xerographic Module.
2. After completing the reassembly, enter diagnostics and perform one of the following actions.
   a. If a new Web Oiler has been installed, initialize the Web Oiler using [1030].
   b. If the old Web Oiler is still in the assembly, remove the slack in the web by running [1033] until the display shows the following: **Count = 001**

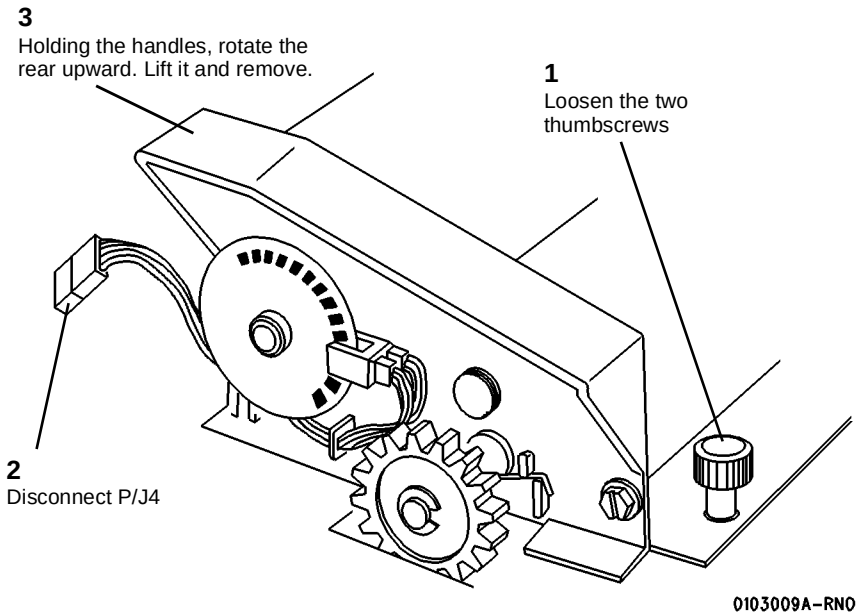


**Figure 1 Removing the Web Oiler Assembly**

# REP 10.8 Stripper Fingers

**Parts List on PL 10.4**

**WARNING**

**Switch off the Main Power Switch. Disconnect the Power Cord. Allow the Fuser Assembly to cool before the procedure is performed.**

## Removal

1. Remove the Stripper Finger Assembly.
2. (Figure 1): Remove the Stripper Fingers.

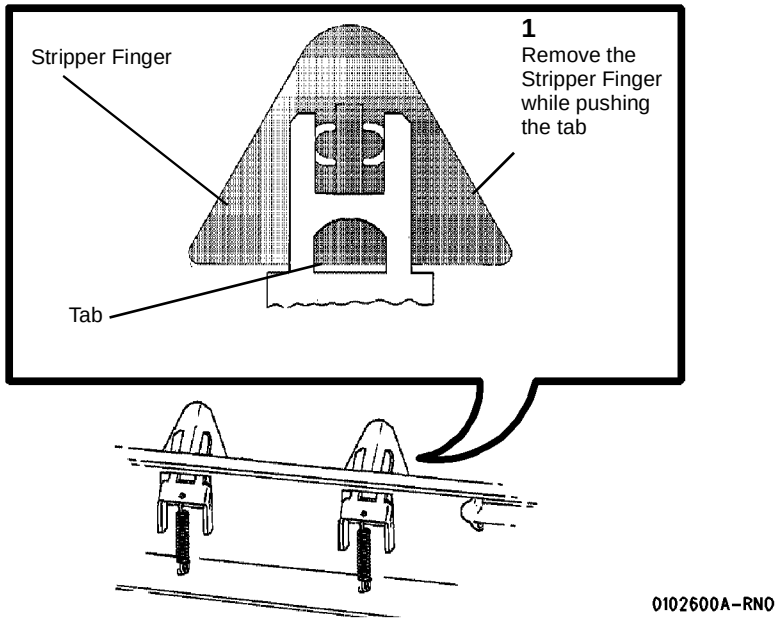


**Figure 1 Removing the Stripper Fingers**

## Replacement

**CAUTION**

*Do not bend the Stripper Finger too far or it will break.*

1. (Figure 2): Reinstall the Stripper Fingers.

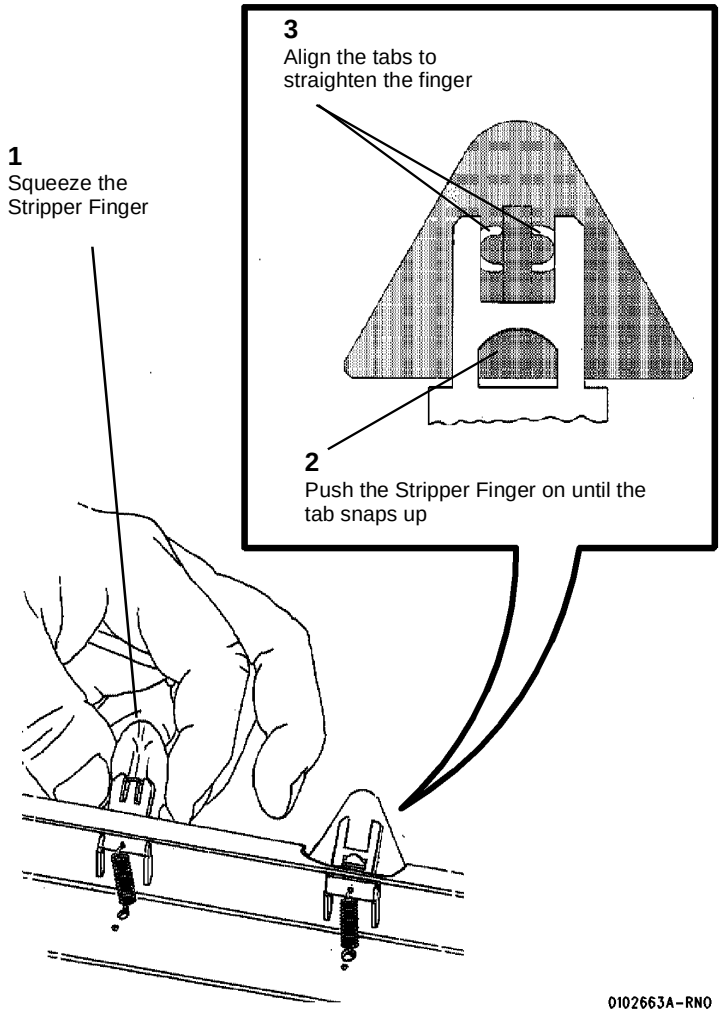


**Figure 2 Reinstalling the Stripper Fingers**

# REP 10.9 Web Oiler

**Parts List on PL 9.7**

**WARNING**

**Switch off the Main Power Switch. Disconnect the Power Cord.**

**WARNING**

**Wear protective gloves when handling parts with silicone oil on them. Do not allow silicone oil to contact your eyes. Silicone oil can cause severe eye irritation. Wash your hands immediately after handling any component covered with silicone oil.**

## Removal

1. Remove the Web Oiler Assembly and place it top down, resting on the handles, on a flat surface (REP 10.7).
2. (Figure 1): Remove the Supply Roll.

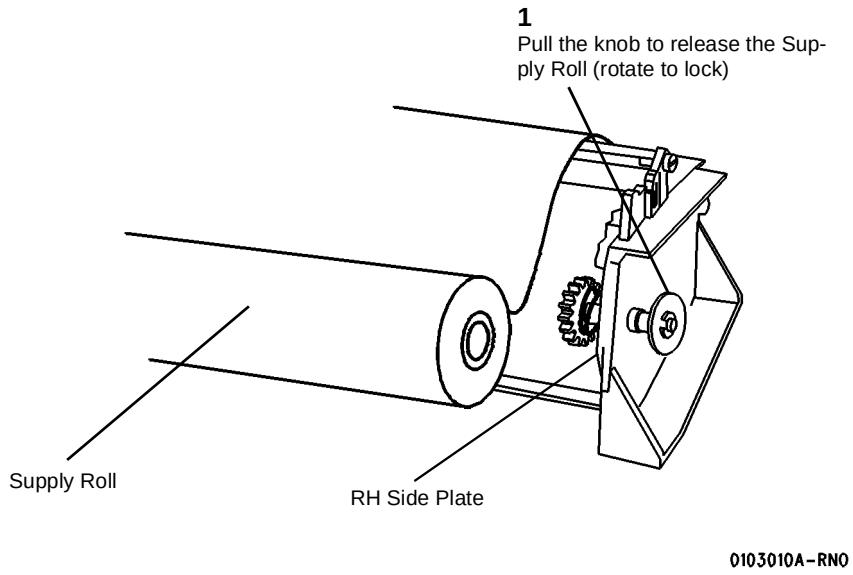


**Figure 1 Removing the Supply Roll**

3. (Figure 2): Remove the Takeup Roll.

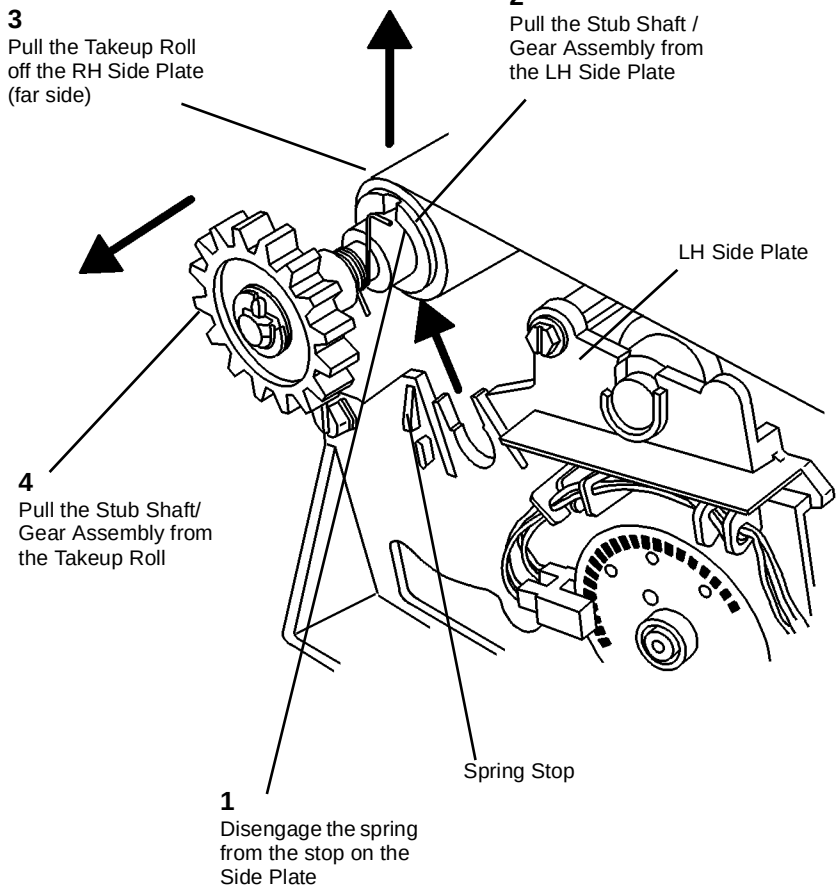


**Figure 2 Removing the Takeup Roll**

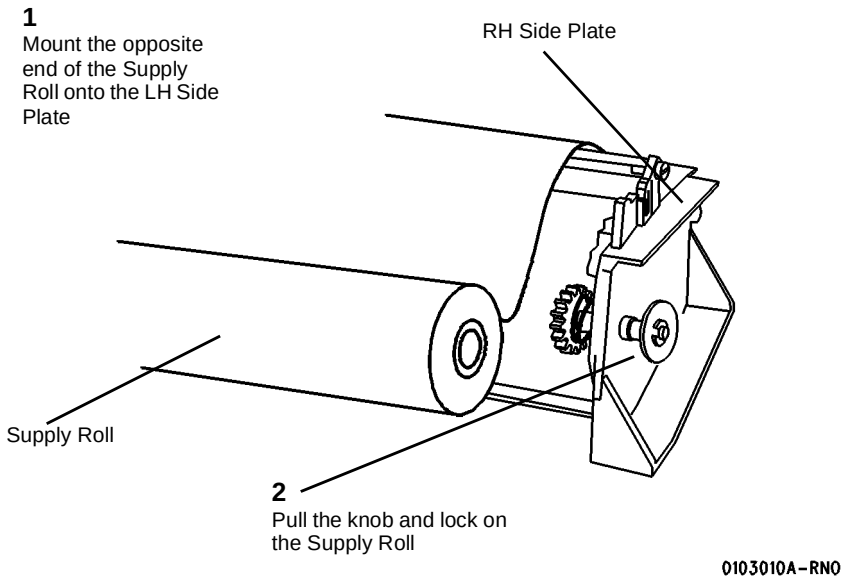


**Figure 3 Reinstalling the Takeup Roll**

## Replacement

1. (Figure 3): Reinstall the Supply Roll.

2. (Figure 4): Reinstall the Takeup Roll.
3. After reinstallation or replacement of the Web Oiler into the assembly, follow the replacement instructions in Web Oiler Assembly (REP 10.7).

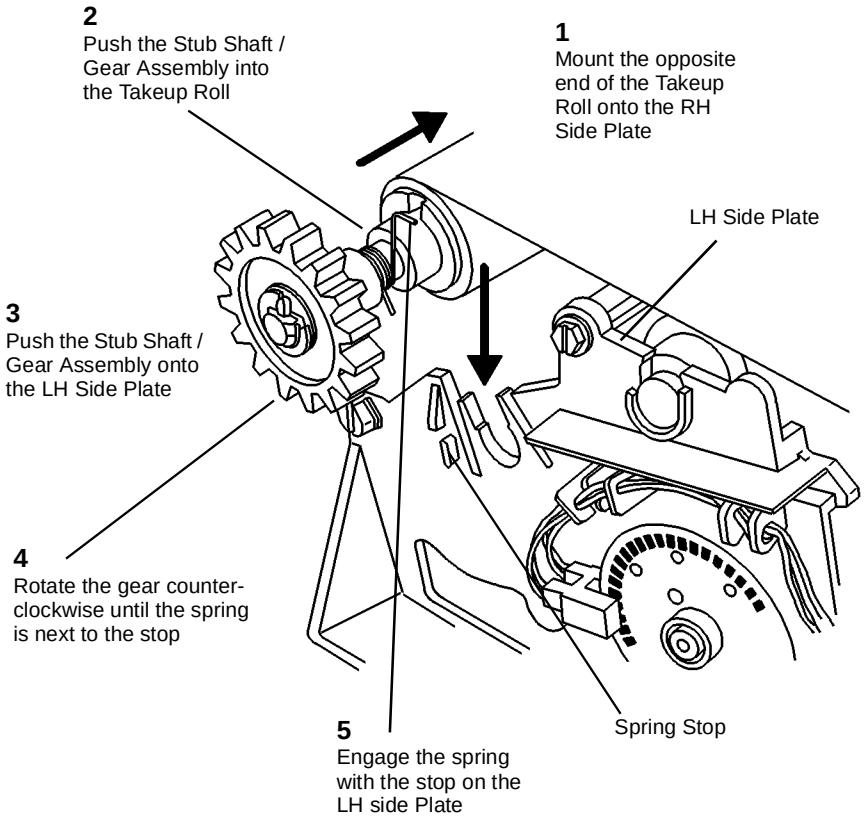


**Figure 4 Reinstalling the Takeup Roll**

# ADJ 3.2 Country Configuration

## Purpose

**WARNING**

**The purpose is to set the Line Service (Input Power) and Billing Type (Billing Meter) configurations according to the customer's requirements.**

## Adjustment

1. Enter diagnostics.
2. Enter code [ **0261**].
3. Table 1: Set the Line Service configuration using the **Previous** / **Next** buttons.
   a. Use the **Next** button to increase the **Adj** setting.
   b. Use the **Previous** button to decrease the **Adj** setting.
   c. Press the **Enter** button in order to store the value in NVM.
   d. Press the **Exit** button.

**Table 1 Line Service**

| Adj | Configuration |
|---|---|
| 00 | 115V |
| 01 | 240V |
| 02 | 220V |

4. Enter code [ **0263**].
5. Table 2: Set the Billing Type configuration using the **Previous** / **Next** buttons.
   a. Use the **Next** button to increase the **Adj** setting.
   b. Use the **Previous** button to decrease the **Adj** setting.
   c. Press the **Enter** button in order to store the value in NVM.
   d. Press the **Exit** button two times.

**Table 2 Billing Type**

| Adj | Configuration |
|---|---|
| 00 | FEET |
| 01 | METRIC |

6. Exit the diagnostics mode.

# ADJ 8.1 Vertical Magnification

## Purpose

**WARNING**

**The purpose is to calibrate the printer to produce the correct length images for each media type.**

## Prerequisite

1. Check the Fuser Temperature (NVM) ( ADJ 10.1).

## Check

1. Enter diagnostics.
2. Enter code [ **0955**] and make one 1200 mm print of Test Pattern #7.
3. Allow the print to cool for five minutes.
4. (Figure 1): Check that 60 blocks in the paper feed direction measure 975 mm +/- .80 mm.

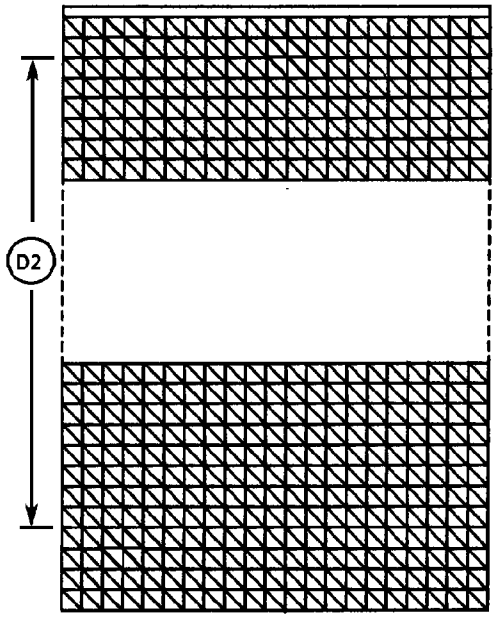


**Figure 1 Checking the Vertical Magnification**

## Adjustment

1. Enter code [ **0602**] in order to adjust the Vertical Magnification.
2. Figure 2 Select the type of media. The following message is displayed. (In this example, bond paper media has been selected.)

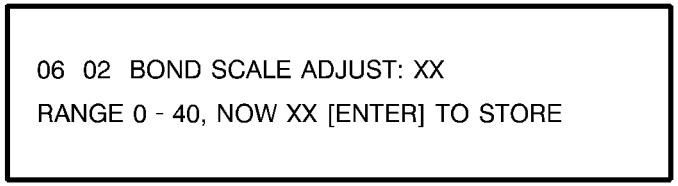


**Figure 2 Media Selection Screen**

***NOTE:*** *The range of adjustment is 0 to 40. Each step equals approximately 1 mm.*

3. Adjust the Vertical Magnification using the **Previous** / **Next** buttons.
   a. Use the **Previous** button to decrease the Set Point, which will decrease the Image Length.
   b. Use the **Next** button to increase the Set Point, which will increase the Image Length.
   c. Press the **Enter** button in order to store the value in NVM.
   d. Press the **Exit** button two times.
4. Repeat the check for all the types of media used by the customer.

# ADJ 8.2 Lead Edge Registration

## Purpose

The purpose is to adjust the print media to the image on the drum for Lead Edge Registration within specification.

## Prerequisite

1. Check the following:
   a. Fuser Temperature (NVM) ( ADJ 10.1)
   b. Vertical Magnification ( ADJ 8.1)

## Check

1. Enter diagnostics.
2. Enter code [ **0955**] and make four 210 mm prints of Test Pattern #7.
3. Allow the prints to cool for five minutes.
4. ( Figure 1): Using the last print, check that the distance from the lead edge to the first horizontal line is 16.25 ± 2 mm.

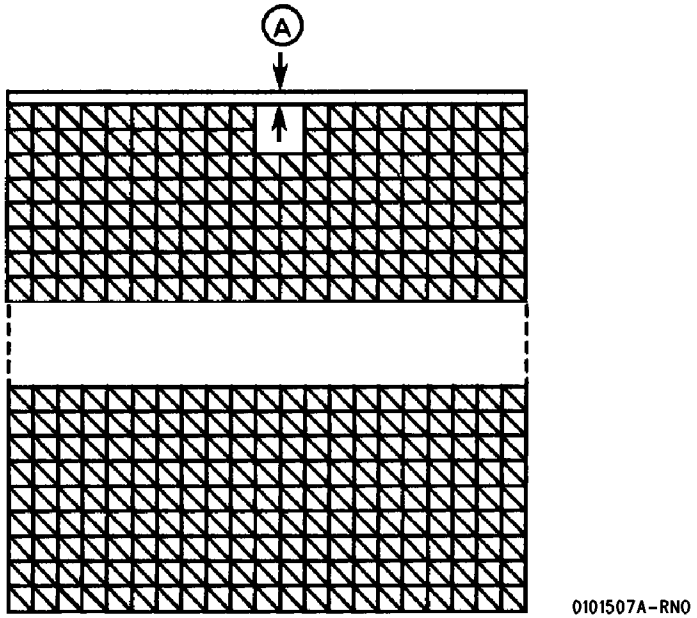


**Figure 1 Checking the Lead Edge Registration**

## Adjustment

1. Enter code [ **0860**] in order to adjust the Lead Edge Registration.
2. ( Figure 2): Select the type of media. The following message is displayed. (In this example, bond paper media has been selected.)

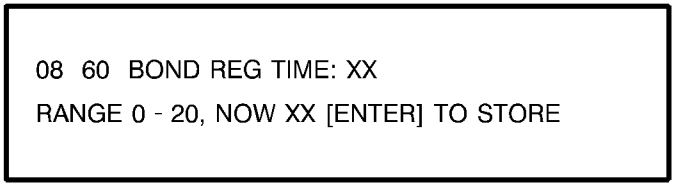


**Figure 2 Media Selection**

***NOTE:*** *The range of adjustment is 0 to 20. Each step equals approximately 1 mm.*

3. Adjust the Lead Edge Registration using the **Previous** / **Next** buttons.
   a. Use the **Previous** button to decrease the Set Point, which will move the image away from the lead edge.
   b. Use the **Next** button to increase the Set Point, which will move the image closer to the lead edge.
   c. Press the **Enter** button in order to store the value in NVM.
   d. Press the **Exit** button two times.
4. Repeat the check for all the types of media used by the customer.

# ADJ 8.3 Cut Length

## Purpose

The purpose is to calibrate the Printer to produce the correct length prints for each media type.

## Prerequisite

1. Check the following:
   a. Fuser Temperature (NVM) ( ADJ 10.1)
   b. Vertical Magnification ( ADJ 8.1)
   c. Lead Edge Registration ( ADJ 8.2)

## Adjustment

1. Enter diagnostics.
2. Enter code [ **0955**] and make one 600 mm print and one 1200 mm print of Test Pattern #7.
3. Allow the prints to cool for five minutes.
4. ( Figure 1): Measure the two prints in the paper feed direction.

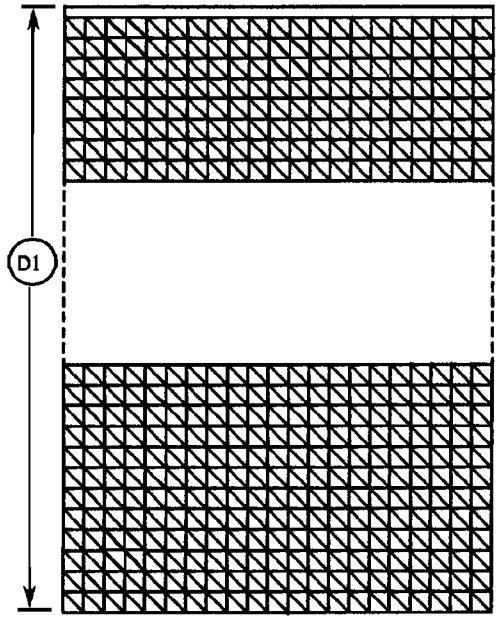


**Figure 1 Checking the Print Length**

5. Enter code [ **0700**] in order to adjust the Cut Length. Enter [ **1**] to adjust.
6. ( Figure 2): Select the type of media. The following message is displayed. (In this example, bond paper media has been selected.)

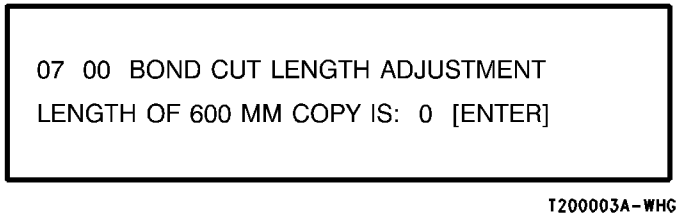


**Figure 2 Media Select**

7. ( Figure 3): Enter the measurement of the 600 mm print and press the **Enter** button. The following message is displayed.

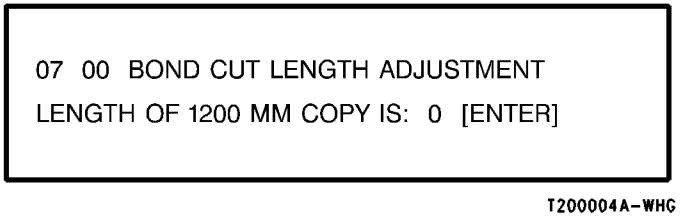


**Figure 3 Print Length**

8. ( Figure 4): Enter the measurement of the 1200 mm print and press the **Enter** button. The following message is displayed.

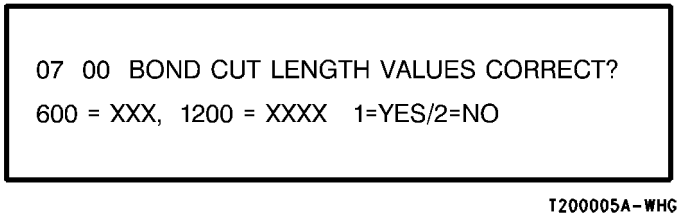


**Figure 4 Print Measurement**

9. Complete the adjustment as appropriate.
10. Repeat the check for all the types of media used by the customer.

# ADJ 8.4 Media Transport

## Purpose

The purpose is to set the correct spacing between the Media Transport and the Drum when a new Media Transport is installed. The correct spacing is obtained by adjusting the position of the Lower Turnaround Baffle.

***NOTE:*** *The art used for this procedure was developed for previous products and may not match the printer configuration exactly.*

**WARNING**

**Switch off the Main Power Switch. Disconnect the Power Cord.**

## Check

1. Remove the Developer Module ( REP 9.5).
2. Remove the white toner shield.
3. Prepare two strips of 0.030 inch (coral) shimstock 0.75 inches (20 mm) wide.
4. Ensure that the Media Transport Cover is closed.
5. ( Figure 1): Check that the Media Transport to Drum spacing is 0.030 +/- 0.005 inches (0.76 +/- 0.1 µµ).

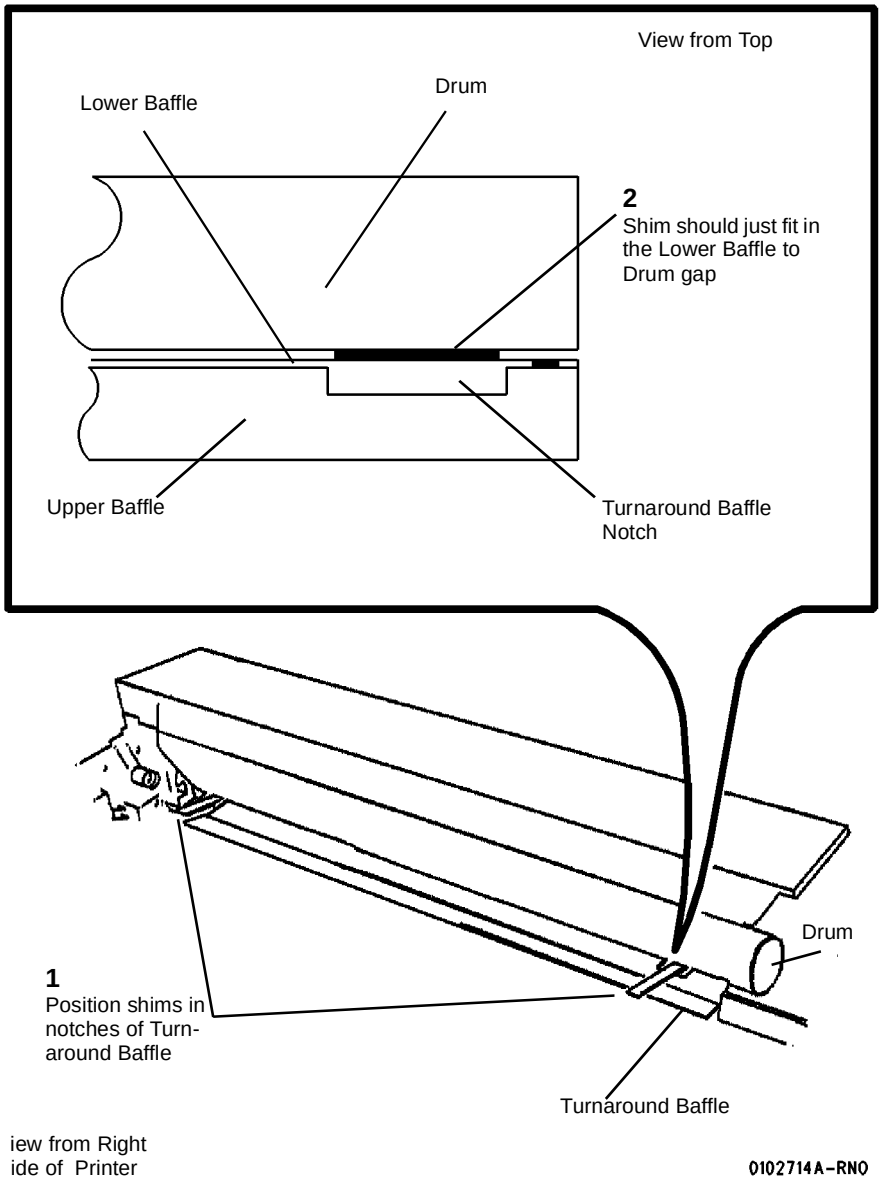


**Figure 1 Checking the Media Transport to Drum Spacing**

## Adjustment

**WARNING**

**Switch off the Main Power Switch. Disconnect the Power Cord.**

1. Remove the Transfer / Detack Corotron ( REP 9.9).
2. Remove the Developer Module ( REP 9.5).
3. Remove the white Toner Shield.
4. ( Figure 2): Position the Lower Turnaround Baffle.
5. Close the Media Transport Cover.

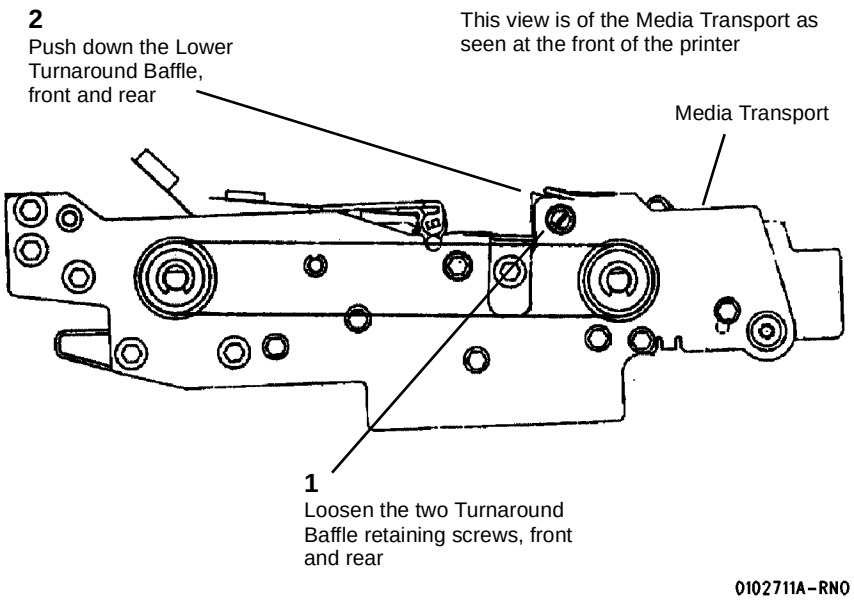


**Figure 2 Positioning the Lower Turnaround Baffle**

***NOTE:*** *The position of the Lower Turnaround Baffle determines the position of the Upper Turnaround Baffle. When the position of the Lower Turnaround Baffle is correctly set, the Upper Turnaround Baffle is correctly positioned.*

6. Cut two strips of 0.030 inch (coral) shimstock 0.75 inches (20 mm) wide.
7. ( Figure 3): Adjust the Media Transport to Drum spacing to 0.030 ± 0.005 inch (0.76 ± 0.1 µµ).

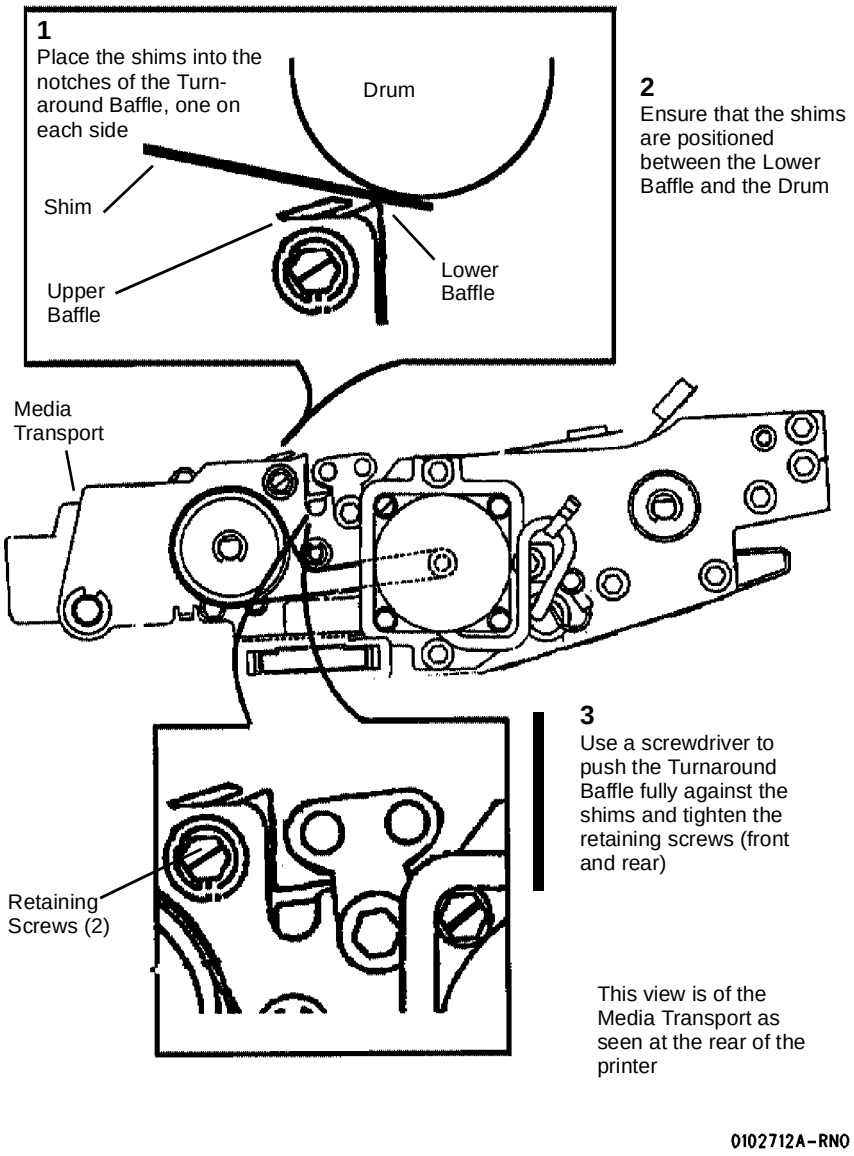


**Figure 3 Adjusting the Media Transport to Drum Spacing**

8. Reinstall the Transfer / Detack Corotron. Push the corotron down and in the direction of the Developer Module before tightening the securing screw.

# ADJ 9.2 Electrostatic Series

## Purpose

The purpose is to set the drum voltages to obtain good print quality as specified in Section 3 of this Service Manual. On Printers With TAG 23, it is necessary to establish the correct Average Light Output (ALO) of the LED Bar in order to set the voltages.

## Adjustment

1. If the Printer is **Without TAG 23**, go to Step 8..
2. **(With TAG 23):** Raise and secure the Top Cover.

***NOTE:*** *In the following steps, "Left" and "Right" describe machine locations as observed when you are facing the Xerographic Module at the left side of the Printer.*

3. **(With TAG 23):** Look in on the right side of the Image Module for the ALO Label, attached to either the front or the rear of the LED Bar.
4. **(With TAG 23):** Record the ALO value as follows.
   a. On an early build printer, read the Bar number on the AOL Label and find the Average Light Output value from Table 1 at the end of this procedure.
   b. On a newer printer, read the Average Light Output value directly from the label. Round the value to the second decimal point. (1.035 becomes 1.04, .983 becomes .98, for example.)
5. **(With TAG 23):** Lower the Top Cover.
6. **(With TAG 23):** Enter Diagnostics.
7. **(With TAG 23):** Program in the Average Light Output value.
   a. Enter code [ **09 03**].
   b. Enter the ALO value.
   c. Press the **Enter** button in order to store the value in NVM.
   d. Press the **Exit** button two times.
8. Raise and secure the Top Cover.
9. Open the Image Module.
10. ( Figure 1): Prepare the Electrometer and connect it to the DMM.

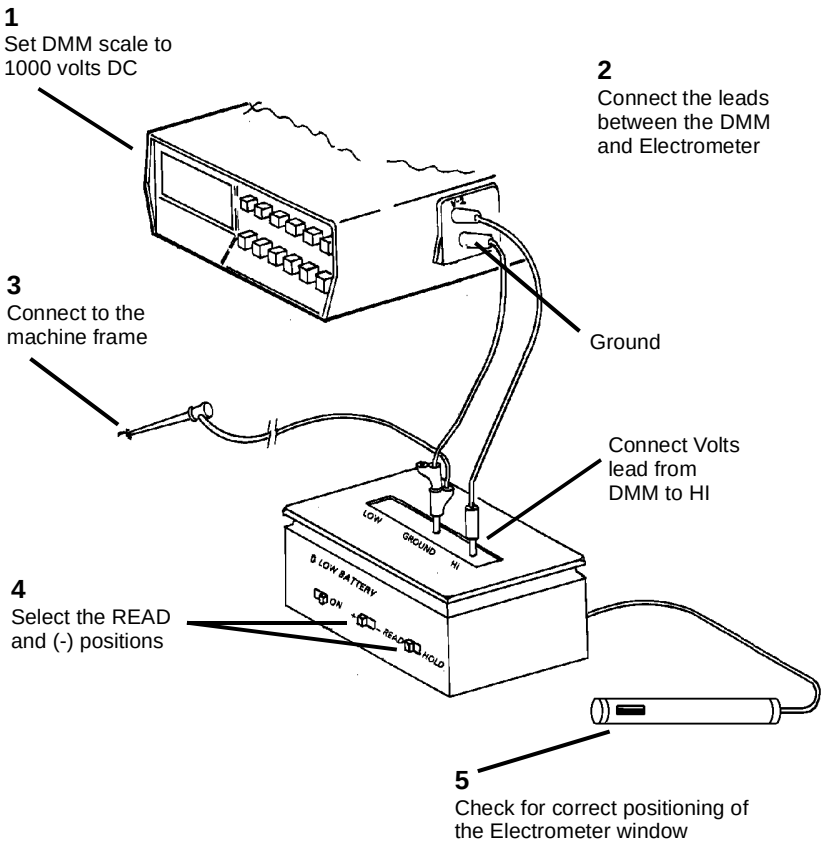


**Figure 1 Connecting the Electrometer to the DMM**

***NOTE:*** *In the following steps, if the voltage cannot be adjusted check for correct positioning of the Electrometer window.*

11. Position the Electrometer Probe to measure the voltage on the drum.
    a. Install the probe wing onto the Electrometer Probe. Ensure that the window of the wing is centered over the window of the probe.
    b. (Figure 2): Remove the plug from the side of the Image Module.
    c. Slide the Electrometer Probe through the hole, into the channel.
    d. Determine the center of the Image Module and push the probe along the channel until the probe window is centered on the Image Module.

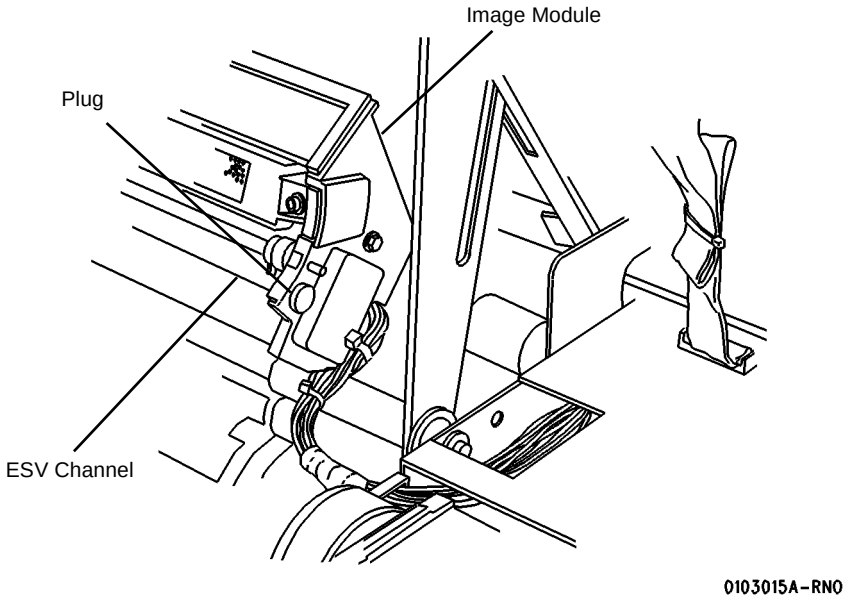


**Figure 2 Removing the Plug**

***NOTE:*** *Failure to center the probe will cause incorrect V-LO readings.*

***NOTE:*** *Run LED Test 9-21.5 to verify that all appropriate LEDs illuminate. Also verify that the Electrometer probe is located within the center 2 inch (50 mm) wide illuminated section of the LED bar.*

12. Close the Image Module, the Top Cover, and the Front Door.
13. Enter diagnostics.
14. Ensure that V-HI is within specification.
    a. Enter [0921-2] for the check and adjustment.
    b. Turn on the electrometer.
    c. The average meter reading should be -600 +15/-5 volts (-585 to -605 volts).
    d. If required, adjust V-HI using the **Previous** / **Next** buttons.
    e. Press the **Enter** button in order to store the value in NVM.
    f. Turn off the electrometer.
15. Ensure that V-LO is within specification.
    a. Enter [0921-3] for the check and adjustment.
    b. Set the Duty Cycle to 15% using the **Previous** / **Next** buttons.
    c. Turn on the electrometer.
    d. Record the value on the DMM.

***NOTE:*** *In the following step, if no change occurs, ensure that the probe is centered.*

    e. Press the **Previous** button to decrease the Duty Cycle value in 1% increments. Pause three seconds at each reading until the value changes 10 Volts.
    f. Press the **Next** button twice to increase the duty cycle value by 2%.
    g. Press the **Enter** button in order to store the value in NVM.
    h. Turn off the Electrometer.

**Table 1 Average Light Output Values**

| Bar # | Value |
|---|---|
| 1 | .75 |
| 2 | .77 |
| 3 | .68 |
| 4 | .74 |
| 5 | .80 |
| 6 | .75 |
| 7 | .74 |
| 8 | .75 |
| 9 | .79 |
| 10 | .61 |
| 11 | .65 |
| 12 | .58 |
| 13 | .71 |
| 14 | .62 |
| 15 | .69 |
| 16 | .70 |
| 17 | .70 |
| 18 | .74 |
| 19 | .71 |
| 20 | .79 |
| 21 | .67 |
| 22 | .92 |
| 23 | .76 |
| 24 | .83 |
| 25 | .79 |
| 26 | 1.05 |
| 27 | 1.05 |
| 28 | 1.05 |
| 29 | 1.10 |
| 30 | 1.13 |
| 31 | 1.02 |
| 32 | .97 |
| 33 | 1.03 |
| 34 | 1.00 |

**Table 1 Average Light Output Values**

| Bar # | Value |
|---|---|
| 35 | 1.01 |
| 36 | 1.06 |
| 37 | .95 |
| 38 | .99 |
| 39 | 1.15 |
| 40 | .87 |
| 41 | 1.02 |
| 42 | 1.05 |
| 43 | 1.10 |
| 44 | 1.06 |
| 45 | .86 |
| 46 | .87 |
| 47 | .93 |
| 48 | .85 |
| 49 | .83 |
| 50 | .90 |
| 51 | .92 |
| 52 | .91 |
| 53 | .92 |
| 54 | 1.03 |
| 55 | .94 |
| 56 | .89 |
| 57 | .95 |
| 58 | .93 |
| 59 | .97 |
| 60 | .96 |
| 61 | .95 |
| 62 | .97 |
| 63 | .96 |
| 64 | .99 |
| 65 | .99 |
| 66 | .93 |
| 67 | 1.00 |
| 68 | .99 |
| 69 | 1.00 |
| 70 | 1.06 |
| 71 | .99 |
| 72 | 1.05 |
| 73 | 1.00 |
| 74 | 1.01 |
| 75 | .94 |

**Table 1 Average Light Output Values**

| Bar # | Value |
|---|---|
| 76 | .95 |
| 77 | .94 |
| 78 | .93 |
| 79 | .89 |
| 80 | 1.00 |
| 81 | .99 |
| 82 | .97 |
| 83 | .94 |
| 84 | 1.12 |
| 85 | 1.02 |
| 86 | 1.01 |
| 87 | .94 |
| 88 | .91 |
| 89 | .96 |
| 90 | .86 |
| 91 | .98 |
| 92 | .94 |
| 93 | .97 |
| 94 | 1.08 |
| 95 | 1.01 |
| 96 | .91 |
| 97 | .97 |
| 98 | .94 |
| 99 | .92 |
| 100 | .94 |
| 101 | .94 |
| 102 | .97 |
| 103 | 1.02 |
| 104 | .96 |
| 105 | .93 |
| 106 | .95 |
| 107 | .91 |
| 108 | .90 |
| 109 | .95 |
| 110 | .96 |
| 111 | 1.03 |
| 112 | 1.05 |
| 113 | .96 |
| 114 | .91 |
| 115 | 1.04 |
| 116 | .89 |

**Table 1 Average Light Output Values**

| Bar # | Value |
|---|---|
| 117 | 1.05 |
| 118 | 1.01 |
| 119 | .95 |
| 120 | .95 |
| 121 | .95 |
| 122 | .92 |
| 123 | .89 |
| 124 | .99 |
| 125 | .98 |
| 126 | .97 |
| 127 | .91 |
| 128 | .88 |
| 129 | .92 |
| 130 | .97 |
| 131 | .88 |
| 132 | .93 |
| 133 | .83 |
| 134 | .87 |
| 135 | .93 |
| 136 | .97 |
| 137 | 1.04 |
| 138 | 1.00 |
| 139 | .94 |
| 140 | .99 |
| 141 | .99 |
| 142 | .84 |
| 143 | .93 |
| 144 | .93 |
| 145 | .91 |
| 146 | .84 |
| 147 | .86 |
| 148 | .89 |
| 149 | .90 |
| 150 | .97 |
| 151 | .95 |
| 152 | 1.02 |
| 153 | .98 |
| 154 | .82 |
| 155 | .84 |
| 156 | .84 |
| 157 | .88 |

**Table 1 Average Light Output Values**

| Bar # | Value |
|---|---|
| 158 | .83 |
| 159 | .90 |
| 160 | .93 |
| 161 | .93 |
| 162 | .92 |
| 163 | .94 |
| 164 | .95 |
| 165 | .81 |
| 166 | 1.02 |
| 167 | .85 |
| 168 | .83 |
| 169 | .93 |
| 170 | .91 |
| 171 | .92 |
| 172 | .79 |
| 173 | .77 |
| 174 | .91 |
| 175 | 1.00 |
| 176 | .93 |
| 178 | .77 |
| 181 | .75 |
| 182 | .72 |
| 183 | .74 |
| 184 | .64 |
| 185 | .63 |
| 186 | .96 |
| 187 | .88 |
| 188 | .95 |
| 189 | .75 |
| 190 | .72 |
| 191 | .73 |
| 192 | .78 |
| 193 | .73 |
| 194 | .72 |
| 195 | .73 |
| 196 | .71 |
| 197 | .73 |
| 198 | .64 |
| 199 | .68 |
| 200 | .79 |
| 201 | .74 |

**Table 1 Average Light Output Values**

| Bar # | Value |
|---|---|
| 202 | 1.19 |
| 203 | 1.00 |
| 204 | .86 |
| 205 | .85 |
| 206 | .69 |
| 207 | .75 |
| 208 | .76 |
| 209 | .71 |
| 210 | .77 |
| 211 | .72 |
| 212 | .78 |
| 213 | .58 |
| 214 | .60 |
| 215 | .66 |
| 216 | .71 |
| 217 | .75 |
| 218 | .72 |
| 219 | .75 |
| 220 | .73 |
| 221 | .76 |
| 222 | .85 |
| 223 | .59 |
| 224 | .71 |
| 225 | .59 |
| 226 | 1.03 |
| 238 | .89 |
| 239 | .91 |
| 240 | .72 |
| 241 | .69 |
| 242 | .82 |
| 243 | .85 |
| 244 | 1.00 |
| 245 | .92 |
| 246 | 1.00 |
| 247 | .90 |
| 248 | .97 |
| 249 | .94 |
| 250 | .95 |
| 251 | .78 |
| 252 | .79 |
| 253 | .69 |

**Table 1 Average Light Output Values**

| Bar # | Value |
|---|---|
| 254 | .68 |
| 255 | .81 |
| 256 | .67 |
| 257 | .65 |
| 258 | .78 |
| 259 | .95 |
| 260 | 1.01 |
| 261 | .97 |
| 262 | .98 |
| 263 | .75 |
| 264 | .63 |
| 265 | .74 |
| 266 | .96 |
| 267 | .92 |
| 268 | .94 |
| 269 | .95 |
| 270 | .67 |
| 271 | .79 |
| 272 | .92 |
| 273 | .65 |
| 274 | .72 |
| 275 | .99 |
| 276 | .94 |
| 277 | .68 |
| 278 | .66 |
| 279 | .84 |
| 280 | .86 |
| 281 | .89 |
| 282 | .89 |
| 283 | .90 |
| 284 | .66 |
| 285 | .71 |
| 286 | .76 |
| 287 | .81 |
| 288 | .81 |
| 289 | .93 |
| 290 | .60 |
| 291 | .63 |
| 292 | .64 |
| 293 | .69 |
| 294 | .66 |

**Table 1 Average Light Output Values**

| Bar # | Value |
|---|---|
| 295 | .71 |
| 296 | .85 |
| 297 | .82 |
| 298 | .86 |
| 299 | .81 |
| 300 | .92 |
| 301 | 1.01 |
| 302 | .58 |
| 303 | .60 |
| 304 | .67 |
| 305 | .72 |
| 306 | .62 |
| 307 | .83 |
| 308 | .63 |
| 309 | .64 |
| 310 | .78 |
| 311 | .67 |
| 312 | .76 |
| 313 | .80 |
| 314 | .58 |
| 315 | .86 |
| 316 | .60 |
| 317 | .66 |
| 318 | .69 |
| 319 | .70 |
| 320 | .76 |
| 321 | .74 |
| 322 | .57 |
| 323 | .63 |
| 324 | .75 |
| 325 | .80 |
| 326 | .90 |
| 327 | .72 |
| 328 | .76 |
| 329 | .80 |
| 330 | .72 |
| 331 | .65 |
| 332 | .74 |
| 333 | .62 |
| 334 | .70 |
| 335 | .58 |

**Table 1 Average Light Output Values**

| Bar # | Value |
|---|---|
| 336 | .72 |
| 337 | .81 |
| 338 | .56 |
| 339 | .73 |
| 340 | .96 |
| 341 | .75 |
| 342 | .82 |
| 343 | .56 |
| 344 | .65 |
| 345 | .77 |
| 346 | .77 |
| 347 | .66 |
| 348 | .63 |
| 349 | .67 |
| 350 | .66 |
| 351 | .82 |
| 352 | .89 |
| 353 | .58 |
| 354 | .61 |
| 355 | .67 |
| 356 | .73 |
| 357 | .65 |
| 358 | .71 |
| 359 | .88 |
| 360 | .79 |
| 361 | .69 |
| 362 | .78 |
| 363 | .74 |
| 364 | .79 |
| 365 | .99 |
| 366 | .84 |
| 367 | .98 |
| 368 | .81 |
| 369 | .82 |
| 370 | .95 |
| 371 | .71 |
| 372 | .65 |
| 373 | .73 |
| 374 | .99 |
| 375 | .74 |
| 376 | .77 |

**Table 1 Average Light Output Values**

| Bar # | Value |
|---|---|
| 377 | .72 |
| 378 | .90 |
| 379 | .73 |
| 380 | .97 |
| 381 | 1.06 |
| 382 | .75 |
| 383 | .58 |
| 384 | .63 |
| 385 | .66 |
| 386 | .66 |
| 387 | .69 |
| 388 | .95 |
| 389 | .95 |
| 390 | .75 |
| 391 | .95 |
| 392 | 1.00 |
| 393 | 1.06 |
| 394 | 1.07 |
| 395 | .69 |
| 396 | .70 |
| 397 | .74 |
| 398 | .62 |
| 399 | .79 |
| 400 | .93 |
| 401 | .80 |
| 402 | .66 |
| 403 | .84 |
| 404 | .74 |
| 405 | .73 |
| 406 | .78 |
| 407 | .94 |
| 408 | .65 |
| 409 | .70 |
| 410 | .71 |
| 411 | .77 |
| 412 | .96 |
| 413 | .95 |
| 414‘ | .84 |
| 415 | .70 |
| 416 | .96 |
| 417 | .93 |

**Table 1 Average Light Output Values**

| Bar # | Value |
|---|---|
| 418 | .95 |
| 419 | .70 |
| 420 | .88 |
| 421 | .93 |
| 422 | .80 |
| 423 | .76 |
| 424 | .89 |
| 425 | .78 |
| 426 | .76 |
| 427 | .75 |
| 428 | .93 |
| 429 | .97 |
| 430 | .78 |
| 431 | .87 |
| 432 | .59 |
| 433 | .99 |
| 434 | .92 |
| 435 | .90 |
| 436 | .96 |
| 437 | 1.01 |
| 438 | .97 |
| 439 | .93 |
| 440 | 1.01 |
| 441 | .99 |
| 442 | .99 |
| 443 | .79 |
| 444 | .73 |
| 445 | .98 |
| 446 | .96 |
| 447 | .99 |
| 448 | .99 |
| 449 | .77 |
| 450 | .98 |
| 451 | .94 |
| 452 | .94 |
| 453 | 1.10 |
| 454 | 1.03 |
| 455 | 1.00 |
| 456 | .98 |
| 457 | .96 |
| 458 | 1.01 |

**Table 1 Average Light Output Values**

| Bar # | Value |
|---|---|
| 459 | 1.01 |
| 460 | .73 |
| 461 | .83 |
| 462 | .79 |
| 463 | .81 |
| 464 | .83 |
| 465 | .88 |
| 466 | 1.07 |
| 467 | 1.08 |
| 468 | 1.00 |
| 469 | .82 |
| 470 | .67 |
| 471 | .79 |
| 472 | .80 |
| 473 | .86 |
| 474 | .85 |
| 475 | .89 |
| 476 | .89 |
| 477 | .82 |
| 478 | .93 |
| 479 | 1.11 |
| 480 | 1.03 |
| 481 | 1.06 |
| 482 | .98 |
| 483 | .89 |
| 484 | .69 |
| 485 | .86 |
| 486 | .84 |
| 487 | 1.04 |
| 488 | .95 |
| 489 | .96 |
| 490 | 1.03 |
| 491 | 1.10 |
| 492 | .82 |
| 493 | .87 |
| 494 | 1.00 |
| 495 | .97 |
| 496 | .95 |
| 497 | .95 |
| 498 | .90 |
| 499 | .98 |

**Table 1 Average Light Output Values**

| Bar # | Value |
|---|---|
| 500 | .65 |
| 501 | .68 |
| 502 | .72 |
| 503 | .96 |
| 504 | .90 |
| 505 | .89 |
| 506 | .94 |
| 507 | .85 |
| 508 | .82 |
| 509 | 1.05 |
| 510 | .91 |
| 511 | 1.02 |
| 512 | .94 |
| 513 | .97 |
| 514 | .88 |
| 515 | .86 |
| 516 | 1.02 |
| 517 | .95 |
| 518 | 1.06 |
| 519 | .69 |
| 520 | .87 |
| 521 | .83 |
| 522 | .88 |
| 523 | .85 |

# ADJ 9.3 Image Density

## Purpose

The purpose is to set the toner concentration to obtain good print quality as specified in Section 3 of this Service Manual.

***NOTE:*** *Electrostatic Series ADJ 9.2 must be performed before the Image Density is adjusted.*

## Check

1. Enter diagnostics.
2. Enter code [**0955**] and make one print of Test Pattern #5.
3. Using S.I.R. 495.01 (82P520), evaluate the darkness squares at the lower right center and the upper left from the lead edge.
4. If the darkness square is not between 1.0 and 1.2, perform the adjustment.

## Adjustment

1. Enter diagnostics.
2. ( Figure 1): Enter code [ **0921-4**. The following message is displayed.

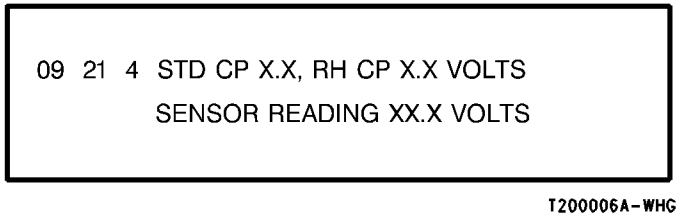


**Figure 1 Message Display**

3. Adjust the Image Density Control Point (STD CP X.X) using the **Previous** / **Next** buttons.
   a. Use the **Next** button to increase the Image Density Control Point (decrease the Image Density).
   b. Use the **Previous** button to decrease the Image Density Control Point (increase the Image Density).
   c. Press the **Enter** button in order to store the value in NVM.
   d. Press the **Exit** button two times.
4. Run the Automatic Tone-up / Tone-down Routine [ **0906**].
5. Repeat the Check.

# ADJ 9.6 Augers

## Purpose

The purpose is to set the Developer Auger and the Mix Auger to the correct angles in order to ensure proper operation of the Developer Module.

**WARNING**

**Switch off the Main Power Switch. Disconnect the Power Cord.**

## Check

***NOTE:*** *In order to see the flats on the augers, remove the Sump Shield using the Developer Material removal procedure ( REP 9.7).*

1. Remove the Sump Shield.
2. ( Figure 1): Check the flats on the augers.
   a. The flats are at the end opposite the gears, approximately one inch from the ends of the augers.
   b. Expose the flats using a brush to move the Developer Material.
   c. Looking down on the augers, check that the Developer Auger is pointing toward the Magnetic Roll at an approximate 45 degree angle.
   d. Check that the Mix Auger is pointing away from the Magnetic Roll and is approximately horizontal.

## Adjustment

***NOTE:*** *In order to position the flats on the augers, the Developer Material must be removed. In order to rotate the augers individually, the gears at the drive end of the Developer Module must be removed.*

1. Remove the Developer Material ( REP 9.7).
2. ( Figure 1): Position the flats on the augers by rotating the appropriate gear at the drive end of the Developer Module.
   a. The flats are at the end opposite the gears, approximately one inch from the ends of the augers.
   b. Looking down on the augers, position the Developer Auger to point toward the Magnetic Roll at an approximate 45 degree angle.
   c. Position the Mix Auger to point away from the Magnetic Roll, approximately horizontal.

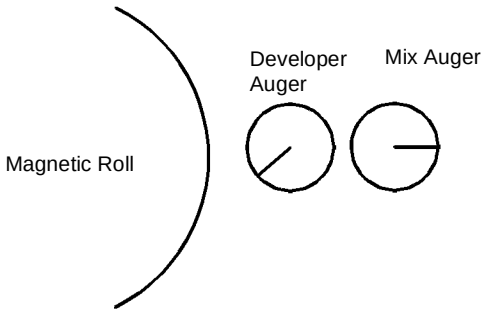


0101509A-RNO

**Figure 1 The Correct auger Orientation**

# ADJ 9.5 Toner Cartridge Home Sensor

## Purpose

The purpose is to set the Toner Cartridge Home Sensor to the correct distance from the magnet on the Toner Cartridge.

**WARNING**

**Switch off the Main Power Switch. Disconnect the Power Cord.**

## Check

1. Remove the Developer Module ( REP 9.5).
2. Remove the Cartridge Drive Plate ( REP 9.14).
3. ( Figure 1): Check that the tip of the Toner Cartridge Home Sensor is 2.5  0.5 mm from the plate.

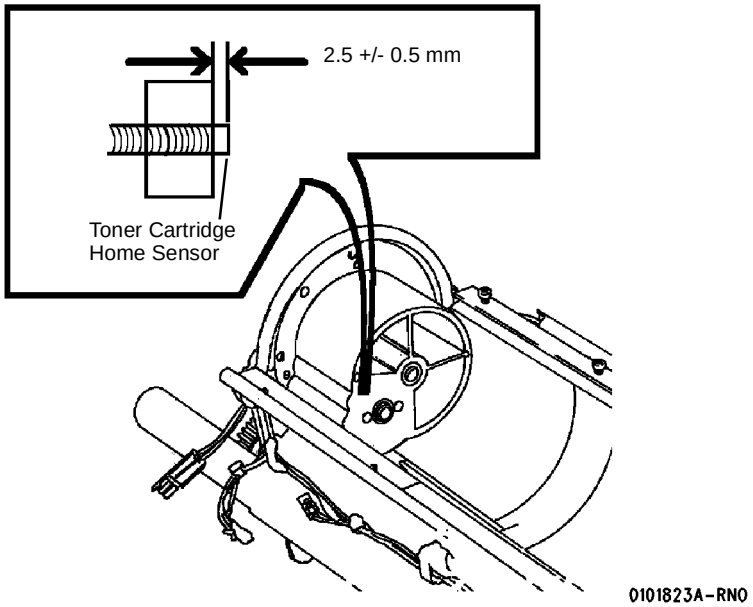


**Figure 1 Checking the Position of the Toner Cartridge Home Sensor**

## Adjustment

1. Perform the check.

***NOTE:*** *The Toner Cartridge Home Sensor is threaded. The wires must be disconnected and straightened in order to rotate the sensor for adjustment.*

2. ( Figure 2): Adjust the Toner Cartridge Home Sensor to 2.5 ± 0.5 mm from the plate.

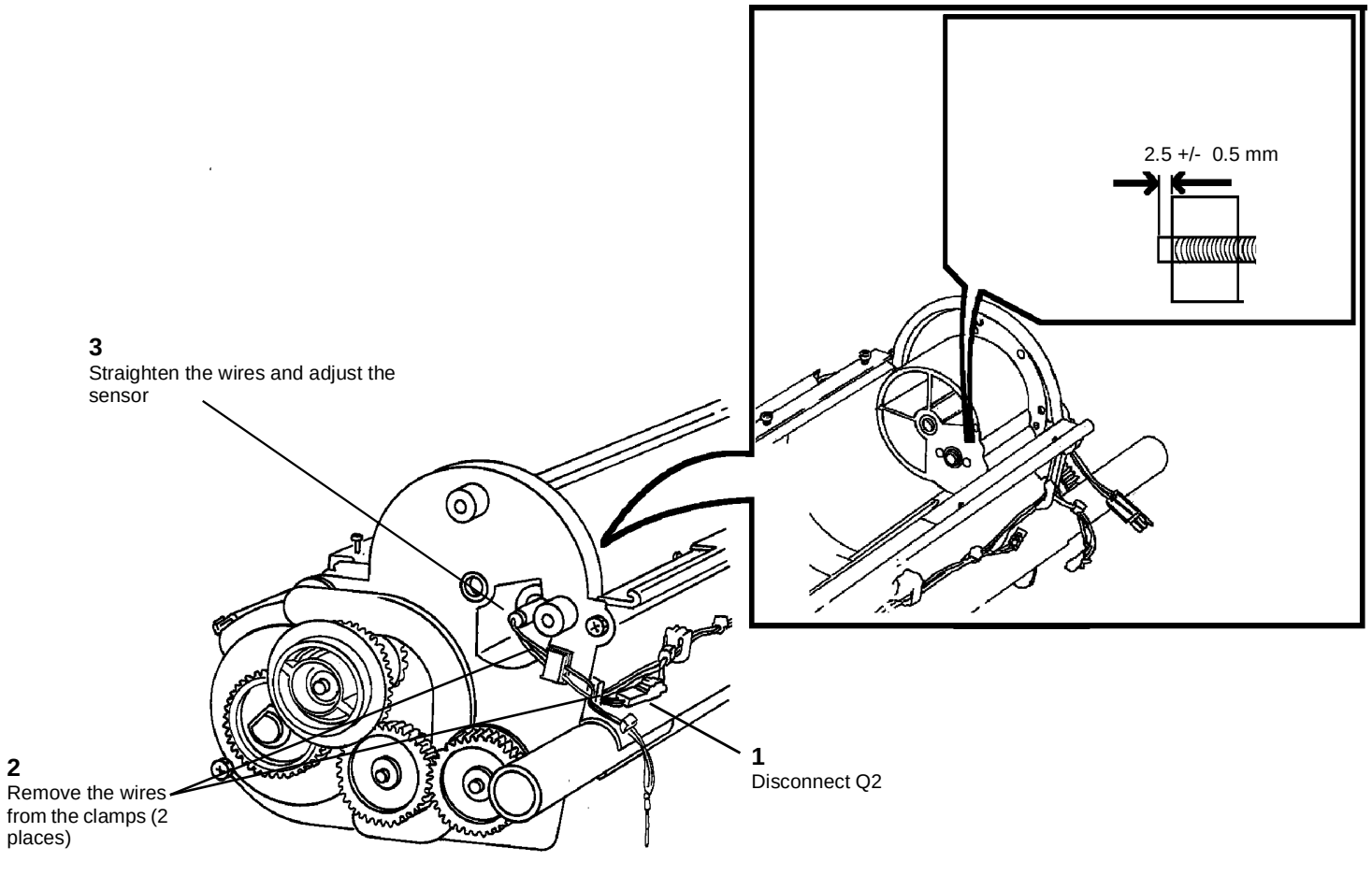


**Figure 2 Adjusting the Toner Cartridge Home Sensor**

# ADJ 10.1 Fuser Temperature (NVM)

## Purpose

The purpose is to adjust the temperature of the Heat Roll in order to obtain the correct fusing.

***NOTE:*** *Fuser temperature may also be checked using ADJ 10.2 Fuser Temperature (with Probe) or ADJ 10.3 Fuser Temperature (with Heat Sensitive Tape).*

## Check

1. Ensure that the Fuser Thermistor is in positive contact with the Heat Roll.
2. Enter diagnostics.
3. ( Figure 1): Enter code [ **1004** in order to switch on the Heat Rod and bring the Heat Roll to the run temperature. The following message is displayed.

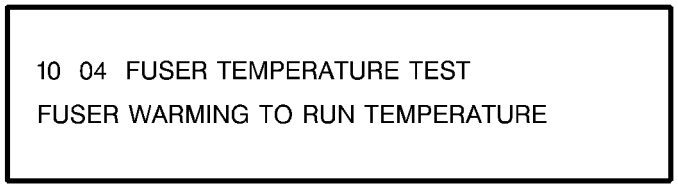


**Figure 1 Fuser Warm Up**

4. ( Figure 2): Check the bond paper fusing temperature when the following message is displayed.

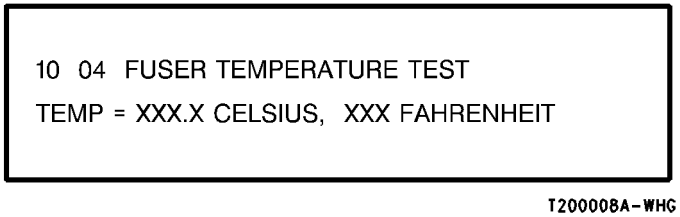


**Figure 2 Temperature Test Screen**

***NOTE:*** *The temperature shown on the Display is 270 degrees F + the adjustment value.*

5. Press the **Exit** button three times.

## Adjustment

1. Ensure that the Fuser Thermistor is in positive contact with the Heat Roll.
2. ( Figure 3): Enter code [ **1060** in order to adjust the Fuser Temperature for bond paper. The following message is displayed.

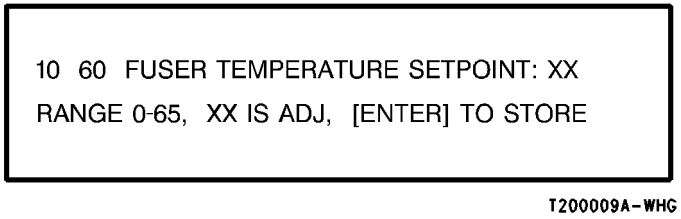


**Figure 3 Fuser Setpoint Screen**

***NOTE:*** *The default Set Point for bond media is 30. Adjust for 300 degrees F.*

3. Adjust the bond paper fusing temperature using the **Previous** / **Next** buttons.
   a. Use the **Previous** button to decrease the Set Point, lowering the fusing temperature.
   b. Use the **Next** button to increase the Set Point, raising the fusing temperature.
   c. Press the **Enter** button in order to store the value in NVM.
   d. Press the **Exit** button two times.
4. ( Figure 4): Enter code [ **1062** in order to adjust the Fuser Temperature for vellum. The following message is displayed.

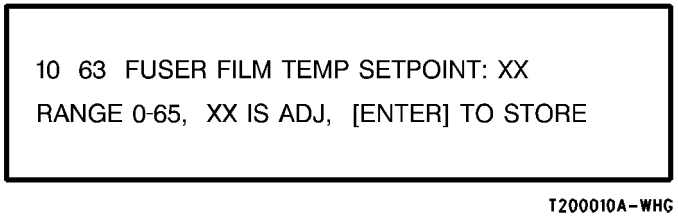


**Figure 4 Vellum Temperature Setpoint**

***NOTE:*** *The default Set Point for vellum media is 24. Adjust for 294 degrees F.*

5. Adjust the vellum fusing temperature using the **Previous** / **Next** buttons.
   a. Use the **Previous** button to decrease the Set Point, lowering the fusing temperature.
   b. Use the **Next** button to increase the Set Point, raising the fusing temperature.
   c. Press the **Enter** button in order to store the value in NVM.
   d. Press the **Exit** button two times.
6. ( Figure 5): Enter code [ **1063** in order to adjust the Fuser Temperature for film. The following message is displayed.

10 62 FUSER VELLUM TEMP SETPOINT: XX
RANGE 0-65, XX IS ADJ, [ENTER] TO STORE

T200011A-WHG

**Figure 5 Film Temperature**

***NOTE:*** *The default Set Point for film media is 30. Adjust for 300 degrees F.*

7. Adjust the film fusing temperature using the **Previous** / **Next** buttons.
   a. Use the **Previous** button to decrease the Set Point, lowering the fusing temperature.
   b. Use the **Next** button to increase the Set Point, raising the fusing temperature.
   c. Press the **Enter** button in order to store the value in NVM.
   d. Press the **Exit** button two times.
8. Check the following:
   a. Vertical Magnification ( ADJ 8.1)
   b. Lead Edge Registration ( ADJ 8.2)
   c. Cut Length ( ADJ 8.3)

# ADJ 10.2 Fuser Temperature (with Probe)

## Purpose

The purpose is to check the temperature of the Heat Roll, using the Temperature Probe, in order to obtain the correct fusing.

## Check

1. Ensure that the Fuser Thermistor is in positive contact with the Heat Roll.
2. ( Figure 1): Connect the Thermal Sensor to the Temperature Probe.

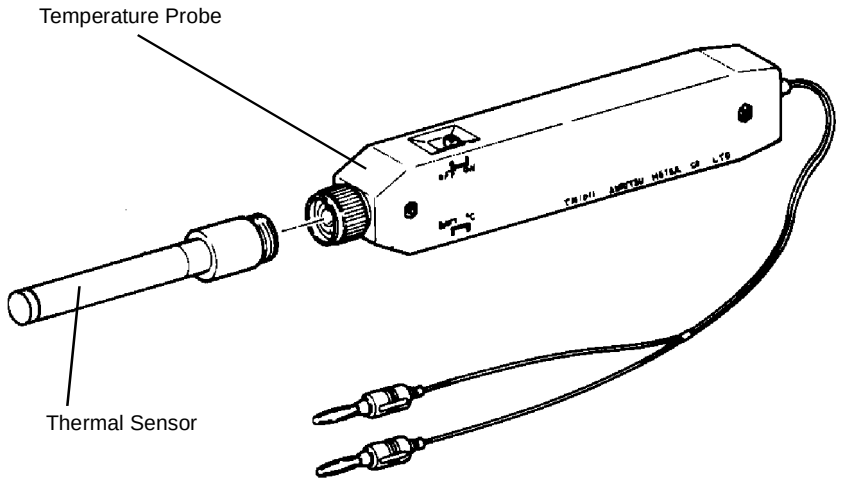


0101685A-RNO

**Figure 1 Connecting the Thermal Sensor to the Temperature Probe**

3. ( Figure 2): Connect the Temperature Probe to the DMM.

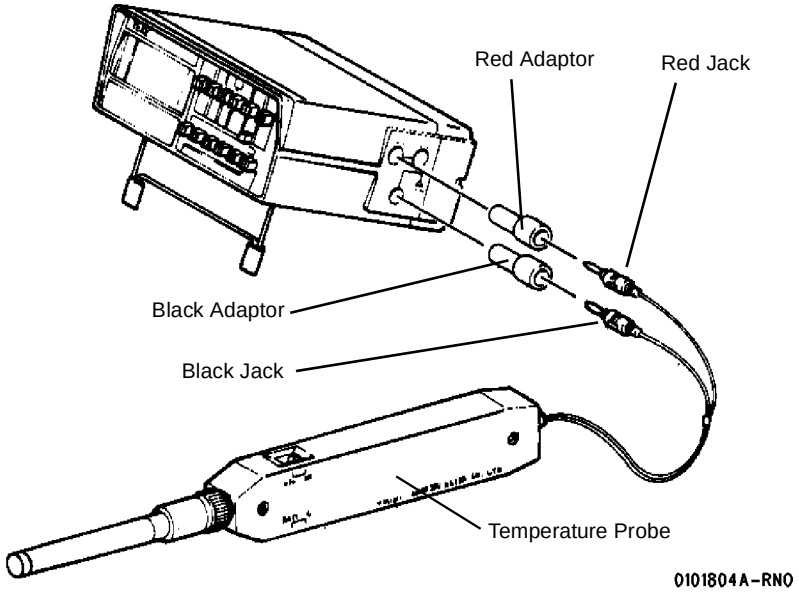


**Figure 2 Connecting the Temperature Probe to the DMM**

4. Switch on the DMM and then switch on the Temperature Probe.
5. Set the DMM to measure DC voltage.
6. Press the 20 Volt range switch on the DMM.
7. Rotate the select switch of the Temperature Probe to **BATT TEST**. If the voltage is lower than 1.7V, replace the battery of the Temperature Probe.
8. Rotate the select switch of the Temperature Probe to the o° **C** position and press the 200mV range switch of the DMM.
9. Enter diagnostics.
10. ( Figure 3): Enter code [ **1004** in order to turn on the Heat Rod and bring the Heat Roll to the run temperature. The following message is displayed.

```
10  04  FUSER TEMPERATURE TEST
FUSER WARMING TO RUN TEMPERATURE
```

T200007A-WHG

**Figure 3 Fuser Warm Up Screen**

11. ( Figure 4): Check the bond paper fusing temperature, using the Temperature Probe, when the following message is displayed.

```
10  04  FUSER TEMPERATURE TEST
TEMP = XXX.X CELSIUS,  XXX FAHRENHEIT
```

T200008A-WHG

**Figure 4 Fuser Temperature Test Screen**

12. Open the Media Transport Latching Cover and press the tip of the Thermal Sensor firmly to the surface of the Heat Roll

***NOTE:*** *As an example, a reading of* ***143*** *on the 200mV scale is 143° C (290° F).*

13. Press the **Exit** button three times.

# ADJ 10.3 Fuser Temperature (with Tape)

## Purpose

The purpose is to check the temperature of the Heat Roll, using Temperature Sensitive Tape, in order to obtain the correct fusing.

## Check

1. Ensure that the Fuser Thermistor is in positive contact with the Heat Roll.
2. ( Figure 1): Prepare one strip of tape from the Temperature Sensitive Tape Kit.

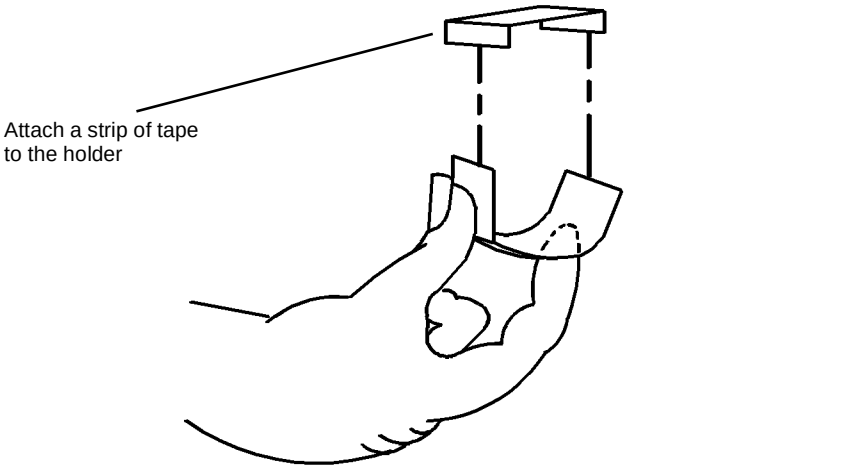


**Figure 1 Preparing the Tape**

3. Enter diagnostics.
4. ( Figure 2): Enter code [ **1004** in order to turn on the Heat Rod and bring the Heat Roll to the run temperature. The following message is displayed .

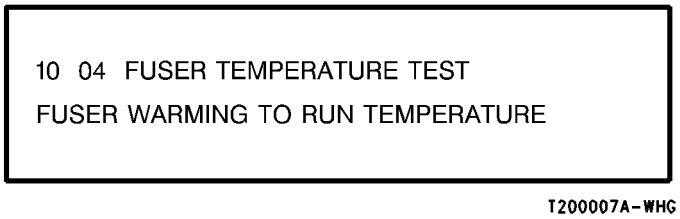


**Figure 2 Fuser Warm Up Screen**

5. ( Figure 3): Check the bond paper fusing temperature, using the Temperature Sensitive Tape, when the following message is displayed.

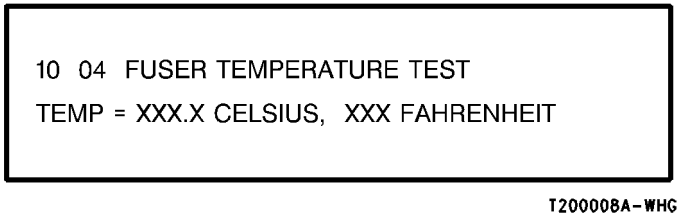


**Figure 3 Fuser Temperature Test Screen**

6. Open the Media Transport Latching Cover and press the tape firmly to the surface of the Heat Roll.
7. Press the **Exit** button three times.

# Parts Lists


**Overview**

Introduction ..... 5-3
Subsystem Information ..... 5-4
Symbology ..... 5-5

**Electrical Components**

PL 1.1A Electrical Control Components/DC Power Generation (W/O TAG 27) ..... 5-7
PL 1.1B Electrical Control Components/DC Power Generation (W/TAG 27) ..... 5-8
PL 1.2A AC Electrical Components (W/O TAG 25) ..... 5-9
PL 1.2B AC Electrical Components (W/TAG 25) ..... 5-10
PL 1.3 DC Electrical Components ..... 5-11
PL 1.4 Control Console ..... 5-12

**Media Roll Feed**

PL 7.1 Roll Supply Feed Assembly ..... 5-13
PL 7.2 Roll Supply Drives ..... 5-14
PL 7.3 Roll Supply Drawer Components (Part 1 of 4) ..... 5-15
PL 7.4 Roll Supply Drawer Components (Part 2 of 4) ..... 5-16
PL 7.5 Roll Supply Drawer Components (Part 3 of 4) ..... 5-17
PL 7.6 Roll Supply Drawer Components (Part 4 of 4) ..... 5-18
PL 7.7 Media Cutter Assembly ..... 5-19
PL 7.8 Media Cutter Components ..... 5-20

**Media Transport**

PL 8.1 Media Transport Assembly ..... 5-21
PL 8.2 Media Registration Components ..... 5-22
PL 8.3 Cut Sheet Feed Components ..... 5-23
PL 8.4 Media Transport Components ..... 5-24

**Xerographic Module**

PL 9.1 Xerographic Module Assembly ..... 5-25
PL 9.2 Photoreceptor ..... 5-26
PL 9.3 Image Module Assembly ..... 5-27
PL 9.4 Transfer/Detack Corotron ..... 5-28
PL 9.5A Drum Cleaning (Part 1 of 3) ..... 5-29
PL 9.5B Drum Cleaning (Part 2 of 3) ..... 5-30
PL 9.5C Drum Cleaning (Part 3 of 3) ..... 5-31
PL 9.6 Web Oiler Assembly ..... 5-32
PL 9.7 Web Oiler Components ..... 5-33

**DEVELOPER Module**

PL 9.8 Developer Module Assembly ..... 5-34
PL 9.9 Developer Module Components (Part 1 of 2) ..... 5-35
PL 9.10 Developer Module Components (Part 2 of 2) ..... 5-36

**Fuser**

PL 10.1 Xerographic Module Assembly ..... 5-37
PL 10.2 Fuser Components ..... 5-38
PL 10.3 Fuser Pressure Components And Moisture Collection ..... 5-39
PL 10.4 Fuser Heat Control And Stripper Fingers ..... 5-40

**Covers and Interlock Switches**

PL 14.1 Transport Latching Cover And Rear Door ..... 5-41
PL 14.2 Front Door And Right Side Covers ..... 5-42
PL 14.3 Developer Cover And Catch Tray ..... 5-43
PL 14.4 Top Cover And Catch Tray Brackets ..... 5-44
PL 14.5 Left Side Covers (8825 Only) ..... 5-45

**Electrical Connectors and Fasteners**

PL 15.1 Miscellaneous Electrical Connectors And Fasteners ..... 5-46

**Common Hardware**

Common Hardware ..... 5-47
Part Number Index ..... 5-48

# Introduction

## Overview

The Parts List section identifies all part numbers and the corresponding location of all spared subsystem components.

## Organization

### Parts Lists

Each item number in the part number listing corresponds to an item number in the related illustration. All the parts in a given subsystem of the machine will be located in the same illustration or in a series of associated illustrations.

### Electrical Connectors and Fasteners

This section contains the illustrations and descriptions of the plugs, jacks, and fasteners used in the machine. A part number listing of the connectors is included.

### Common Hardware

The common hardware is listed in alphabetical order by the letter or letters used to identify each item in the part number listing and in the illustrations. Dimensions are in millimetres unless otherwise identified.

### Part Number Index

This index lists all the spared parts in the machine in numerical order. Each number is followed by a reference to the parts list on which the part may be found.

## Other Information

### Abbreviations

Abbreviations are used in the parts lists and the exploded view illustrations to provide information in a limited amount of space. The following abbreviations are used in this manual:

**Table 1**

| Abbreviation | Meaning |
|---|---|
| **A3** | 297 x 594 Millimetres |
| **A4** | 210 x 297 Millimetres |
| **A5** | 148 x 210 Millimetres |
| **AD** | Auto Duplex |
| **AWG** | American Wire Gauge |
| **EMI** | Electro Magnetic Induction |
| **GB** | Giga Byte |
| **KB** | Kilo Byte |
| **MB** | Mega Byte |
| MM | Millimetres |
| **MOD** | Magneto Optical Drive |
| **NOHAD** | Noise Ozone Heat Air Dirt |
| **PL** | Parts List |
| **P/O** | Part of |

**Table 1**

| Abbreviation | Meaning |
|---|---|
| **R/E** | Reduction/Enlargement |
| **REF**: | Refer to |
| **SCSI** | Small Computer Systems Interface |
| **W/** | With |
| **W/O** | Without |

**Table 2**

| | **Operating Companies** |
|---|---|
| **Abbreviation** | **Meaning** |
| **AO** | Americas Operations |
| **NASG - US** | North American Solutions Group - US |
| **NASG** - Canada | North American Solutions Group - Canada |
| **XE** | Xerox Europe |

## Symbology

Symbology used in the Parts List section is identified in the Symbology section.

## Service Procedure Referencing

If a part or assembly has an associated repair or adjustment procedure, the procedure number will be listed at the end of the part description in the parts lists e.g. (REP 5.1, ADJ 5.3)

# Subsystem Information

## Use of the Term "Assembly"

The term "assembly" will be used for items in the part number listing that include other itemized parts in the part number listing. When the word "assembly is found in the part number listing, there will be a corresponding item number on the illustrations followed by a bracket and a listing of the contents of the assembly.

## Brackets

A bracket is used when an assembly or kit is spared, but is not shown in the illustration. The item number of the assembly or kit precedes the bracket; the item numbers of the piece parts follow the bracket.

## Tag

The notation "W/Tag" in the parts description indicates that the part configuration has been updated. Check the change Tag index in the General Information section of the Service Data for the name and purpose of the modification.

In some cases, a part or assembly may be spared in two versions: with the Tag and without the Tag. In those cases, use whichever part is appropriate for the configuration of the machine on which the part is to be installed. If the machine does not have a particular Tag and the only replacement part available is listed as "W/Tag," install the Tag kit or all of the piece parts. The Change Tag Index tells you which kit or piece parts you need.

Whenever you install a Tag kit or all the piece parts that make up a Tag, mark the appropriate number on the Tag matrix.

## Symbology

A Tag number within a circle pointing to an item number shows that the part has been changed by the tag number within the circle (Figure 1). Information on the modification is in the Change Tag Index.

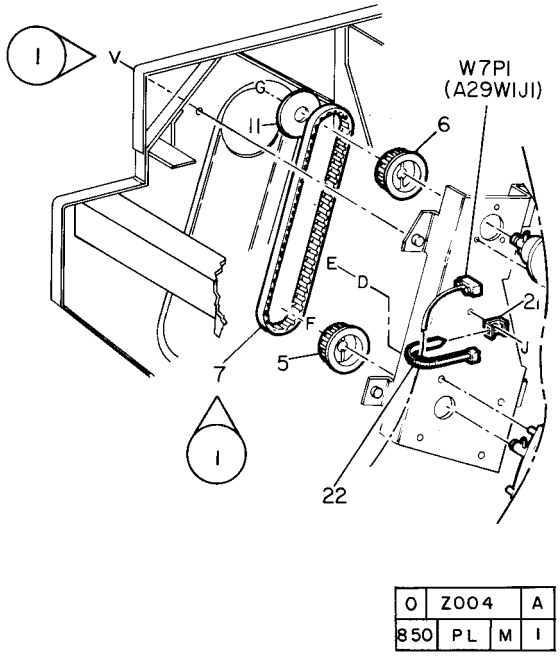


**Figure 1 With Tag Symbol**

A Tag number within a circle having a shaded bar and pointing to an item number shows that the configuration of the part shown is the configuration before the part was changed by the Tag number within the circle (Figure 2).

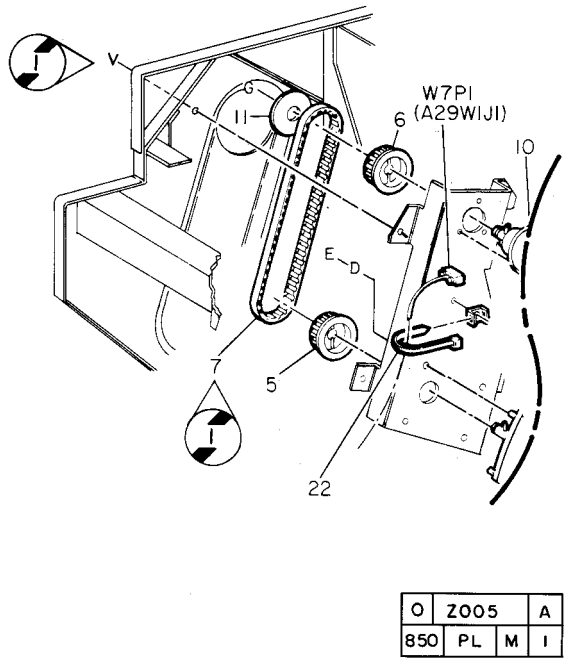


**Figure 2 Without Tag Symbol**

A tag number within a circle with no apex shows that the entire drawing has been changed by the tag number within the circle (Figure 3). Information on the modification is in the Change Tag Index.

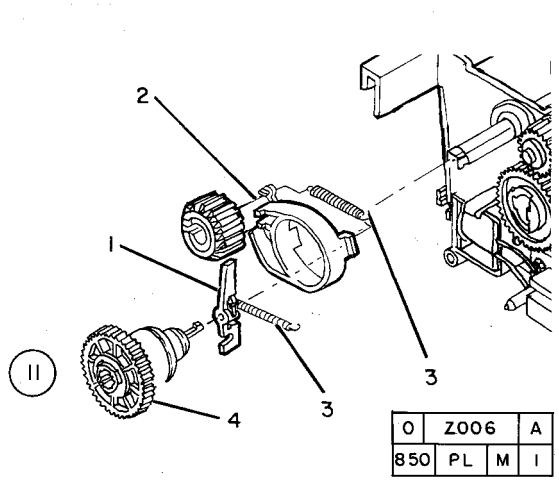


**Figure 3 Entire Drawing With Tag Symbol**

A tag number within a circle with no apex and having a shaded bar shows that the entire drawing was the configuration before being changed by the tag number within the circle (Figure 4).

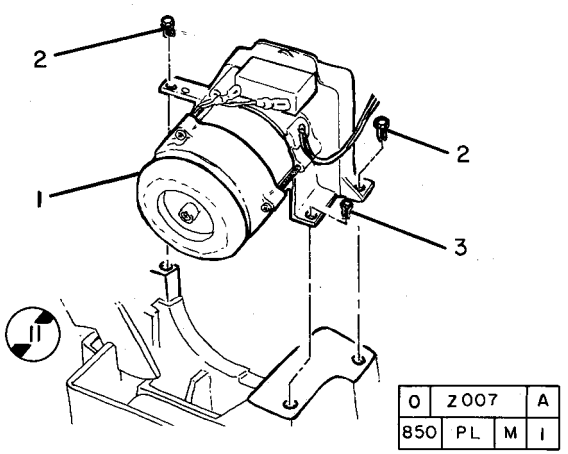


**Figure 4 Entire Drawing Without Tag Symbol**

# PL 1.1A Electrical Control Components/DC Power Generation (W/O TAG 27)

| Item | Part | Description |
|---|---|---|
| 1 | 160K37310 | A/B Switch PWB (8830) (W/TAG 90) |
| 2 | 162K28840 | VPI Harness (8830) (W/TAG 90) |
| 3 | 162K41460 | A/B Switch to IOT Harness (8830) (W/TAG 90) |
| 4 | 162K41440 | Power Driver Harness (8830) (W/ TAG 90) |
| 5 | 105K15863 | DC Low Voltage Power Supply |
| 6 | 160K33322 | Driver PWB (A2) (W/O TAG 25) |
| – | 600K75311 | Driver PWB (A2) (W/TAG 25) |
| 7 | 600K81881 | Circuit Assembly Kit (EO) (W/TAG 4, TAG 16, TAG 17, TAG 26, (W/O TAG 53) |
| – | 600K81882 | Circuit Assembly Kit (EO) (W/TAG 4, TAG 16, TAG 17, TAG 26, TAG 53, ) |
| – | 600K81873 | Circuit Assembly Kit (NACO) (W/ TAG 4, TAG 16, TAG 17, TAG 26, TAG 53, TAG 87) |
| 8 | 600K88890 | Control Eprom Kit |
| 9 | – | Language Eprom No. 1 (P/O PL 1.1A Item 3) |
| 10 | – | Language Eprom No.2 Kit (Not Spared) |
| 11 | 537K51151 | AO Portuguese Language Eprom |
| – | 537K51161 | AO Spanish Language Eprom |
| 12 | 162K29730 | Controller Connector (See Note 1) |
| 13 | – | Main PWB (A3) (Not Spared) (See Note 2) (W/TAG 3, TAG 10) (W/O TAG 27) (REP 3.1) |

***NOTE:*** *1:- Cable supplied for non-imbeded controllers only.*

***NOTE:*** *2:- See PL1.1B Item 4.*

***NOTE:***

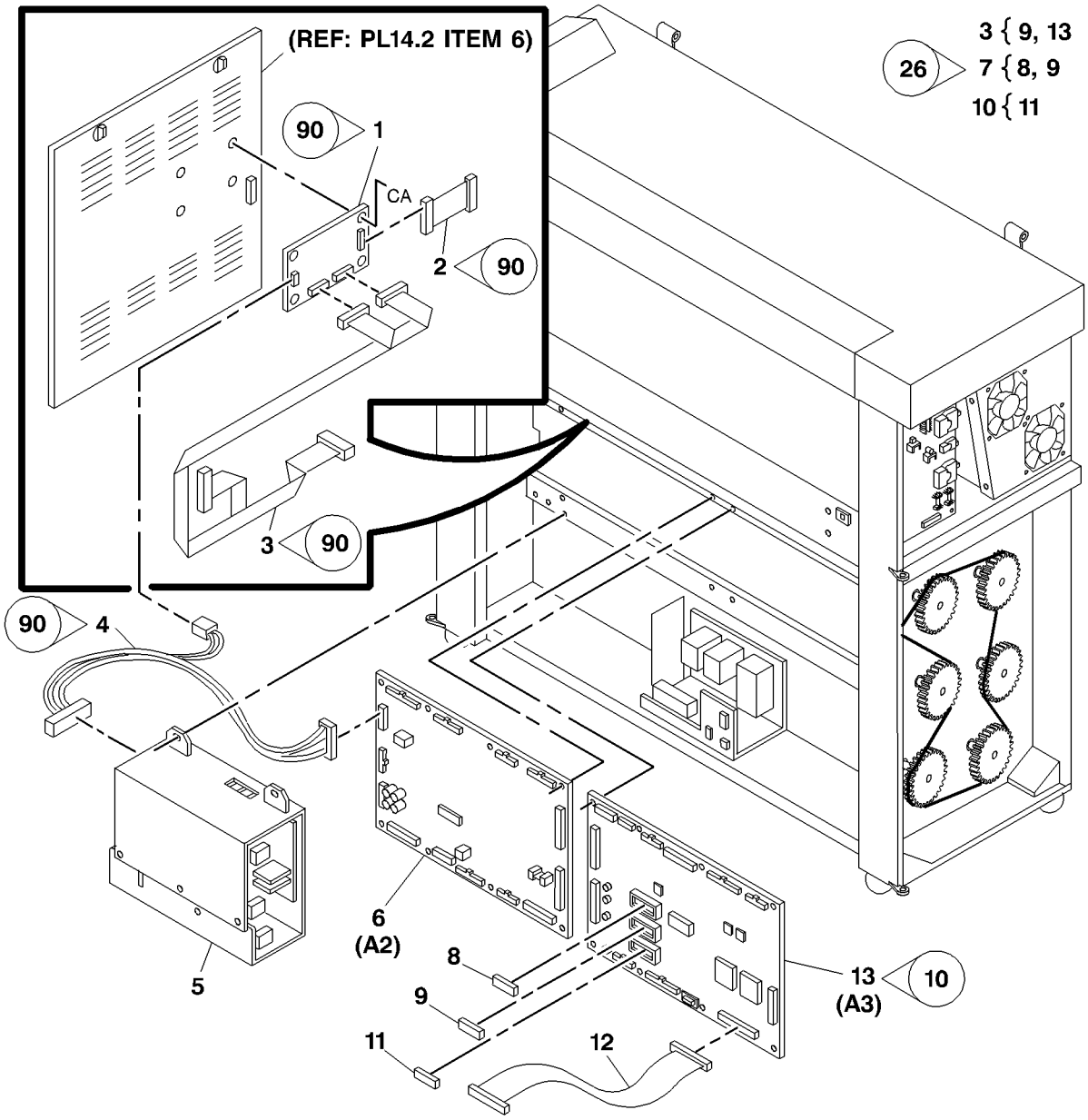

# PL 1.1B Electrical Control Components/DC Power Generation (W/TAG 27)

| Item | Part | Description |
|---|---|---|
| 1 | 105K18273 | DC Low Voltage Power Supply Assembly (W/TAG 25) |
| 2 | 160K33322 | Driver PWB (A2) (W/O TAG 25) |
| – | 600K75311 | Driver PWB Kit (A2) (W/TAG 25) |
| 3 | 162K29730 | Controller Connector (See Note) |
| 4 | 600K75321 | Main PWB Kit (A3) (W/TAG 27) |
| 5 | – | Power Module Mounting Bracket (P/O PL 1.1B Item 1) |
| 6 | – | Power Cord (5V PS) (P/O PL 1.1B Item 1) |
| 7 | 117K32660 | Power Cord (25V PS) |
| 8 | 105E13850 | Power Supply (5V) |
| 9 | 105E13863 | Power Supply (25V) |
| 10 | 152K36231 | Jumper Harness (14 Conductor) |
| 11 | 162K23453 | Motor Control Harness |

***NOTE:*** *1: Note cable supplied for non-imbeded controllers only.*

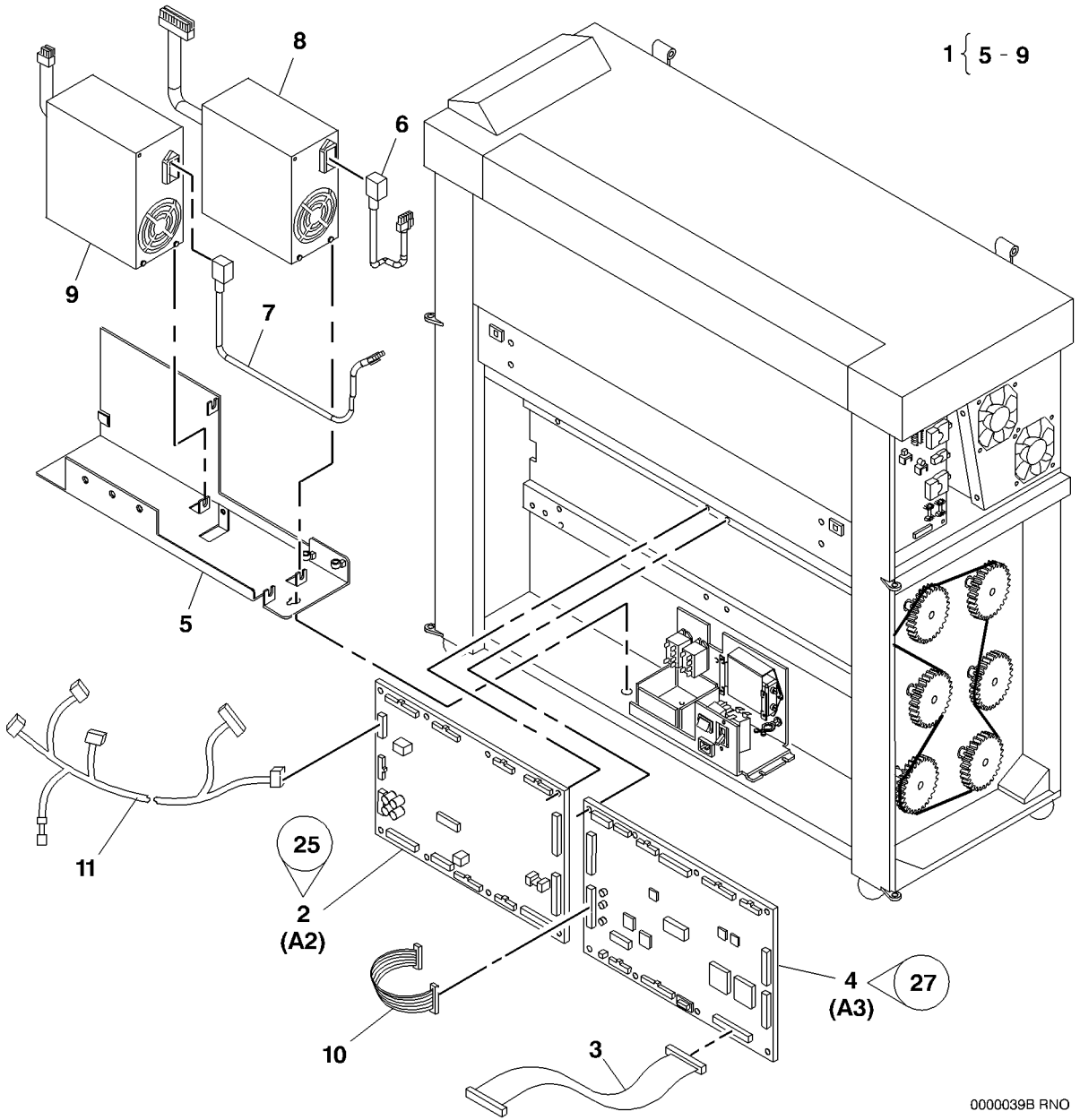

# PL 1.2A AC Electrical Components (W/O TAG 25)

| Item | Part | Description |
|---|---|---|
| 1 | – | AC Module Assembly (Not Spared) (50/60 Hz) |
| 2 | 142K01540 | Filter |
| 3 | – | AC Module Housing (P/O PL 1.2A Item 1) (50/60 Hz) |
| 4 | 109E01040 | AC Relay (K1/K3) |
| 5 | 707W01652 | Fuser Triac (Q1) (REP 10.3) |
| 6 | 103E02721 | Ballast Resistor (R1/R2) (60HZ) |
| – | 103E02731 | Ballast Resistor (R1/R2) (50HZ) |
| 7 | – | Main Power Switch (CB1) (P/O PL 1.2A Item 1) |
| 8 | – | Inlet Connector (P/O PL 1.2A Item 1) |
| 9 | 117K22761 | Power Cord (60HZ) |
| – | 117K27550 | Power Cord (50HZ) |
| 10 | 108E01762 | Ground Fault Panel |
| 11 | 120E02160 | Twist Clamp |
| 12 | 120E02150 | Twist Clamp |
| 13 | 600K60610 | AC Module Kit (TAG 5) |
| 14 | – | Support Bracket (P/O PL 1.2A Item 13) |

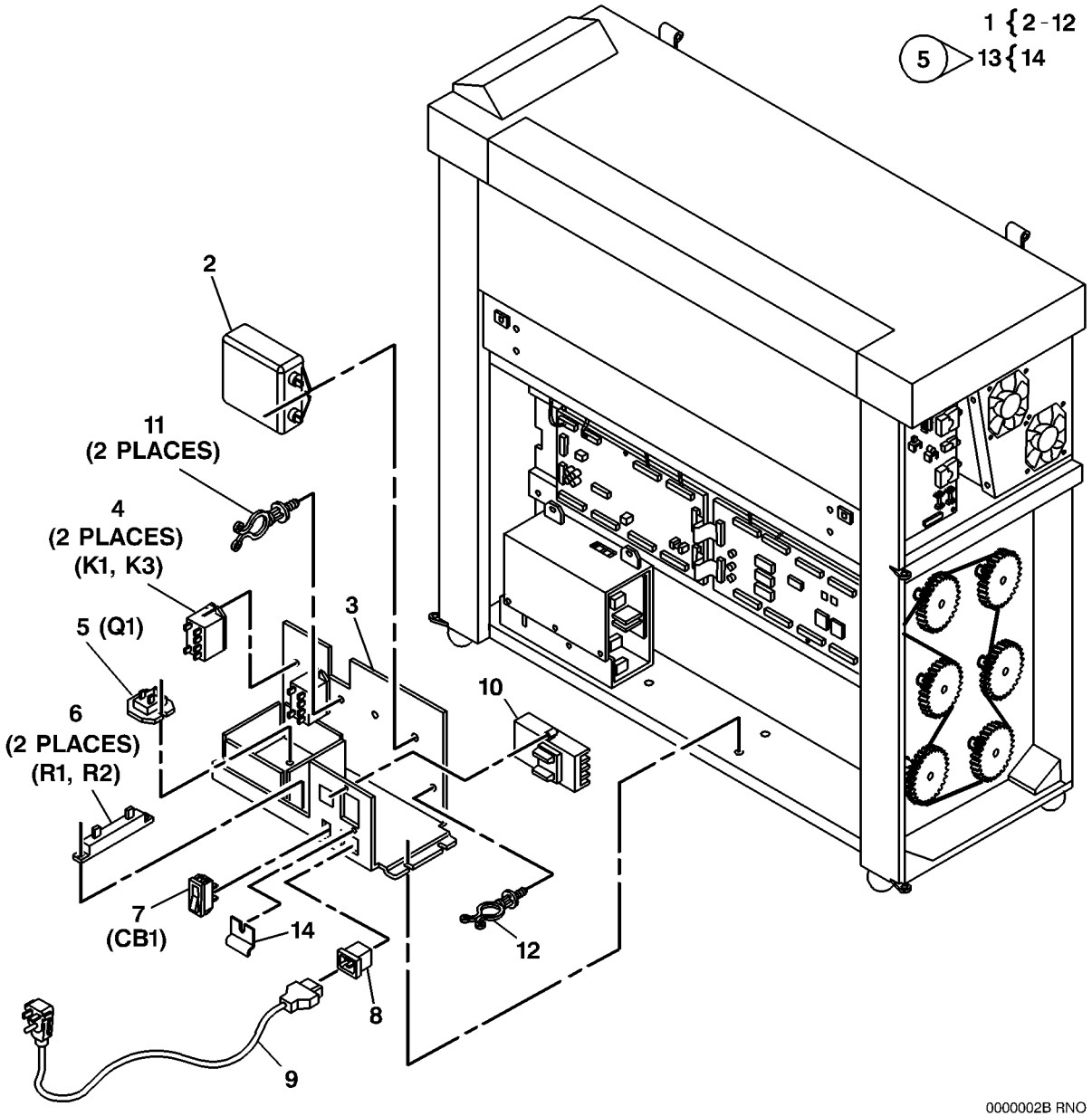

# PL 1.2B AC Electrical Components (W/TAG 25)

| Item | Part | Description |
|---|---|---|
| 1 | – | AC Module Assembly (Not Spared) (50/60 Hz) |
| 2 | – | PWB Bracket (Not Spared) |
| 3 | 160K59660 | PWB |
| 4 | 142K01540 | Filter |
| 5 | 120E02160 | Twist Clamp |
| 6 | 109E01040 | AC Relay (K1) (50/60 Hz), AC Relay (K3) (60 Hz) (K1/K3) |
| 7 | 707W01652 | Fuser Triac (Q1) (REP 10.3) |
| 8 | 103E02721 | Ballast Resistor (R1/R2) (60HZ) |
| – | 103E02731 | Ballast Resistor (R1/R2) (50HZ) |
| 9 | – | Main Power Switch (CB1) (P/O PL 1.2B Item 1) |
| 10 | 891E25140 | Label (60HZ Only) |
| 11 | 117K22761 | Power Cord (60 Hz) |
| – | 117K27550 | Power Cord (50 Hz) |
| 12 | – | Inlet Connector (P/O PL 1.2B Item 1) |
| 13 | 120E02150 | Twist Clamp |
| 14 | 108E02282 | Residual Current Breaker (20A) (W/TAG 29) |
| – | 108E05310 | Ground Fault Panel (20A) (W/O TAG 29) |
| 15 | – | AC Module Housing (P/O PL 1.2B Item 1) (50/60 Hz) |
| 16 | – | Heat Rod Control PWB (P/O PL 1.2B Item 18) (W/TAG 50) |
| 17 | 604K04430 | Fuser Control Kit (PIC) (W/TAG 50) |
| 18 | 160K73561 | Heat Rod Control PWB Assembly (50 Hz) (W/TAG 50) |
| 19 | 162K68390 | Interconnect Harness |

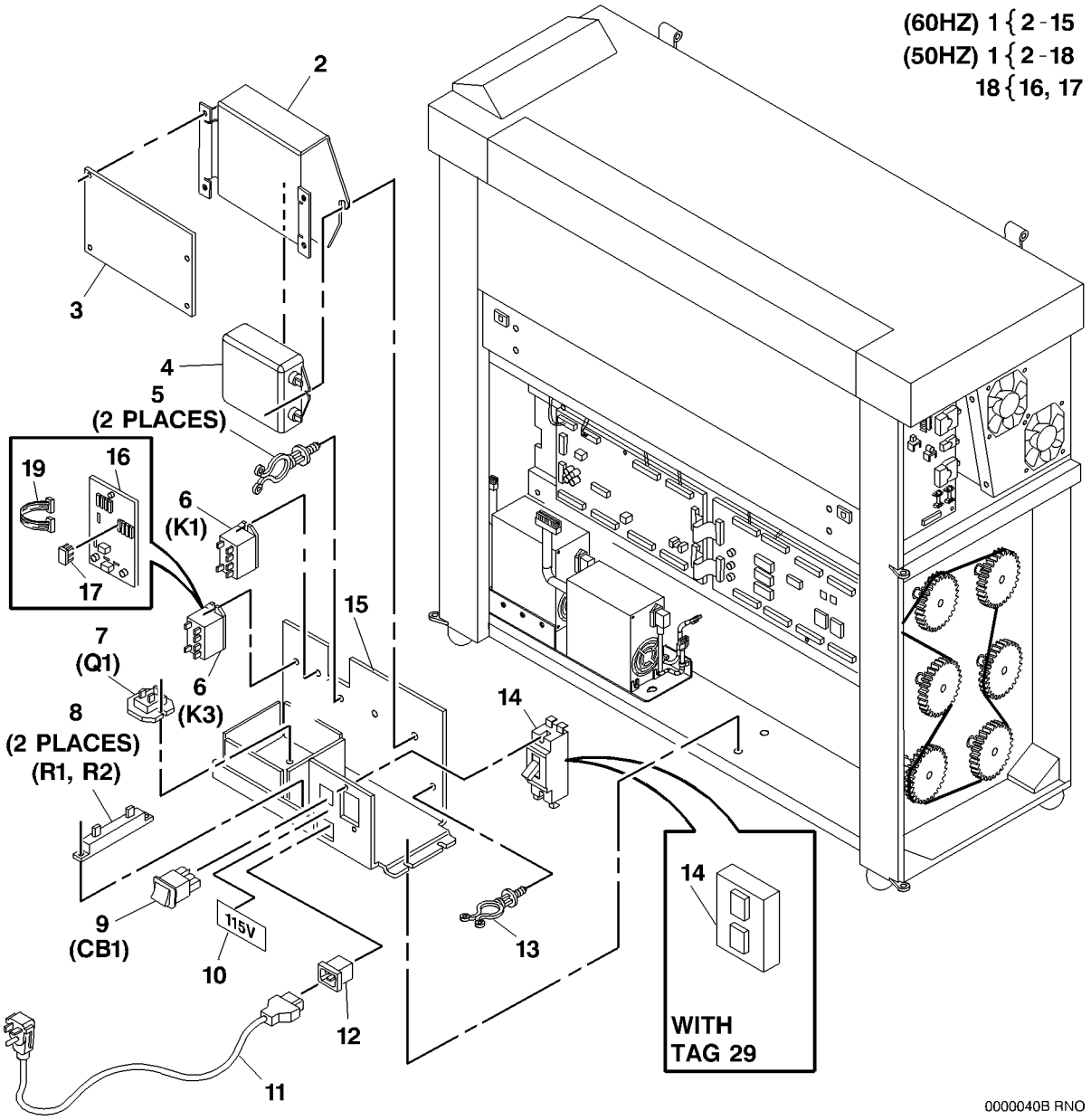

# PL 1.3 DC Electrical Components

| Item | Part | Description |
|---|---|---|
| 1 | 111K00021 | Media Counter |
| 2 | – | Standoff (Not Spared) |
| 3 | 105K13542 | High Voltage Power Supply (REP 3.2) |
| 4 | 054K12300 | Fan Duct |
| 5 | 127E11240 | Fan |
| 6 | 092E36450 | Charge Corotron Label (Red Arrow) |
| 7 | 600K60900 | Diagnostic Kit |
| 8 | – | Harness (P/O PL 1.3 Item 7) |
| 9 | 162K32650 | Folder Enablement Harness |
| 10 | 117K26200 | Transfer Corotron Harness |
| 11 | 117K26191 | Detack Corotron Harness |

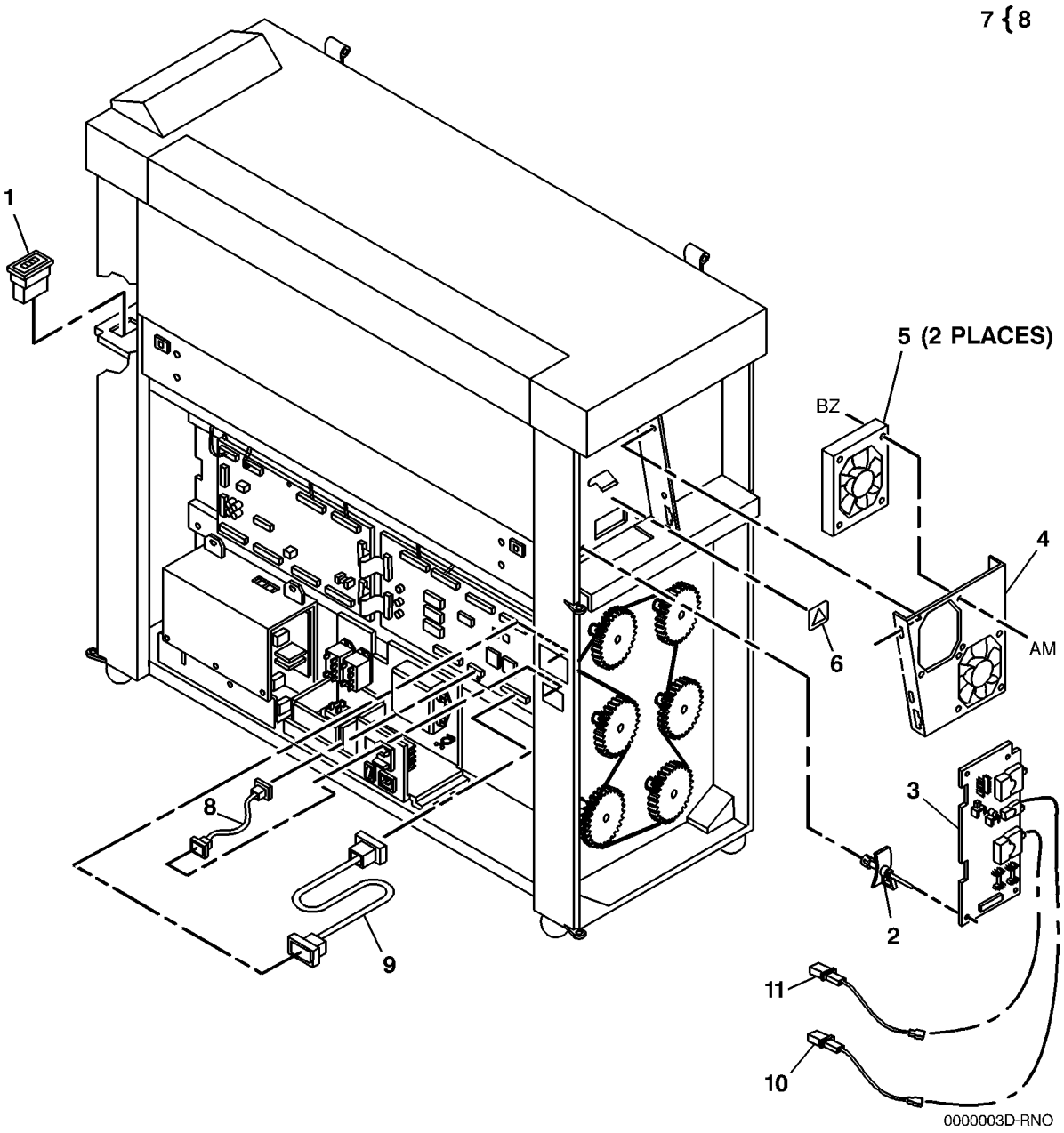

# PL 1.4 Control Console

| Item | Part | Description |
|---|---|---|
| 1 | 101K26083 | Control Console Assembly (8830) (W/TAG 32) |
| – | 101K40051 | Control Console Assembly (8825) (W/TAG 32) |
| 2 | 096E78251 | Control Console Label (8830) (W/O TAG 32) |
| – | 891E70531 | Control Console Label (8825) (W/TAG 32) |
| – | 891E70530 | Control Console Label (8825) (W/O TAG 32) |
| – | 096E78252 | Control Console Label (8830) (W/TAG 32) |
| 3 | – | ESD Insulator (P/O PL 1.4 Item 1) |
| 4 | – | Display (P/O PL 1.4 Item 1) |
| 5 | – | Control Console Housing (P/O PL 1.4 Item 1) |
| 6 | 101E12281 | Display Housing |
| 7 | 162K23421 | Control Console To Controller Harness |

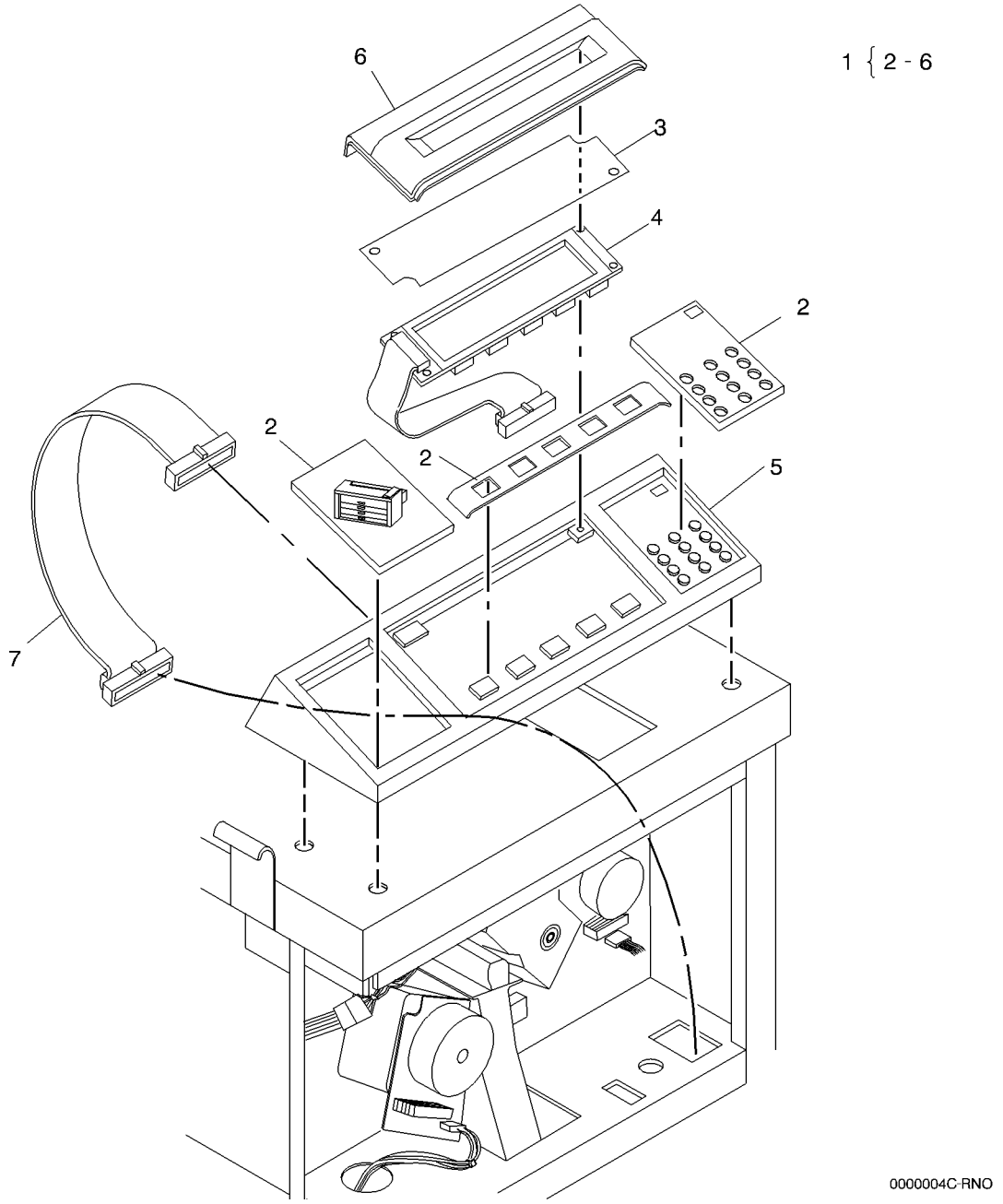

# PL 7.1 Roll Supply Feed Assembly

| Item | Part | Description |
|---|---|---|
| 1 | 130K51801 | Position Sensor |
| 2 | 130E02271 | Drawer Interlock Switch |
| 3 | 050K53080 | Roll Supply Drawer Assembly (Sealed) (REP 7.1) |
| – | 050K19612 | Roll Supply Drawer Assembly (REP 7.1) |
| 4 | 010K01351 | Slide |
| 5 | 022K28930 | Roll Feed Drive Roll (REP 7.4) |
| 6 | – | Heater Assembly (Not Spared) |
| 7 | 126K07330 | Heater |
| 8 | – | Heater Housing (P/O PL 7.1 Item 6) |

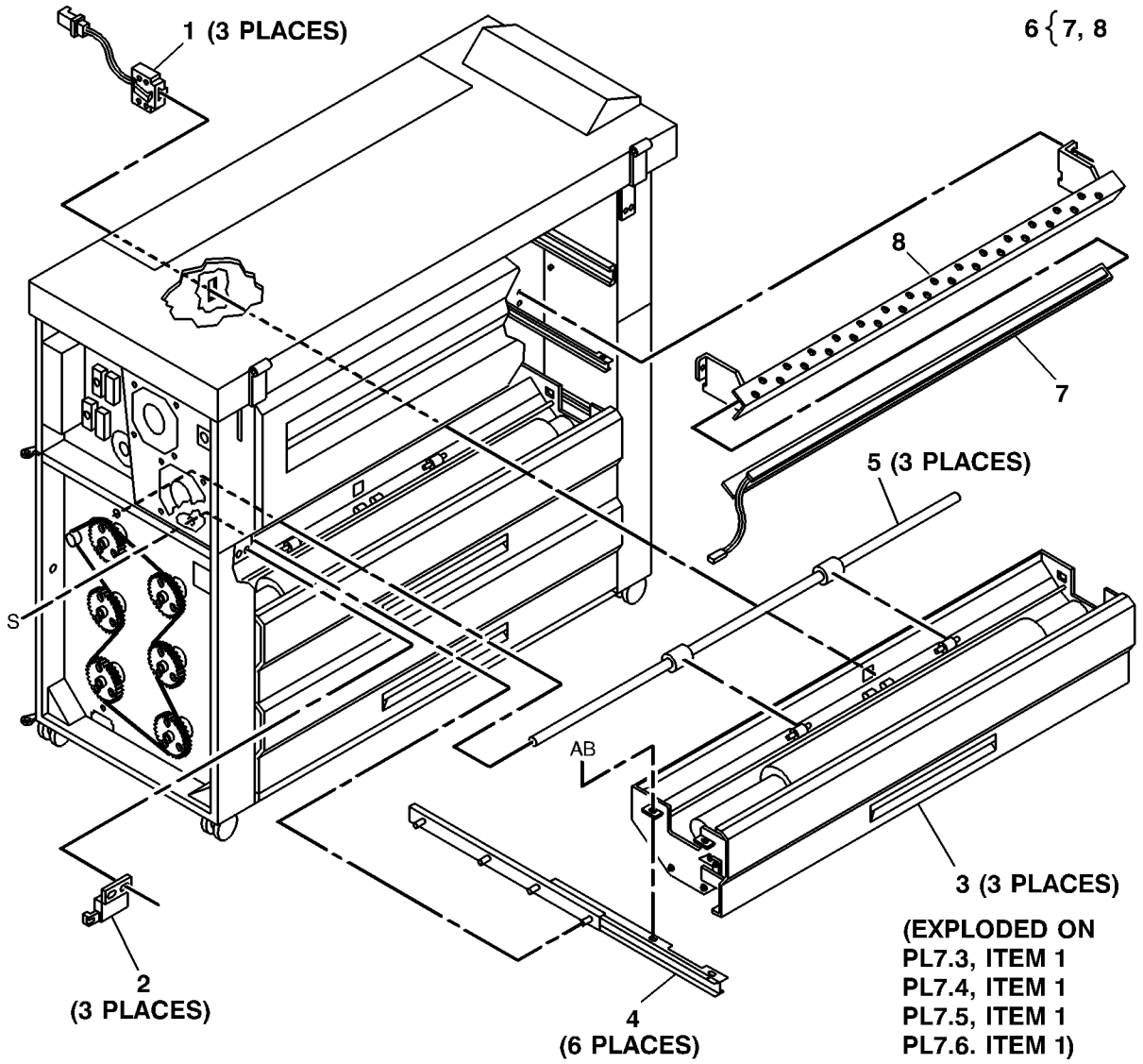


0000007A-RNO

## PL 7.2 Roll Supply Drives

| Item | Part | Description |
|---|---|---|
| 1 | 007K07561 | Roll Drive Motor Assembly |
| 2 | 127K04293 | Roll Drive Motor (REP 7.9) |
| 3 | – | Bracket (P/O PL 7.2 Item 1) |
| 4 | 160K23870 | Drive Motor PWB |
| 5 | 007E16410 | Main Drive Sprocket (10T) |
| 6 | 023E06750 | Chain (8830) |
| – | 023E17510 | Chain (8825) |
| 7 | 007E19071 | Sprocket (50T) |
| 8 | 121E07510 | Clutch (Feed, Rewind) (REP 7.5 REP 7.6) |
| 9 | – | Rewind Shaft (P/O PL 7.2 Item 15) |
| 10 | 005E06810 | Encoder Disk (REP 7.11) |
| 11 | 413W30854 | Bearing |
| 12 | – | Rewind Housing (P/O PL 7.2 Item 15) |
| 13 | 130E03250 | Motion Sensor (REP 7.7) |
| 14 | 007E14610 | Rewind Drive Gear (12T) |
| 15 | 007K05760 | Rewind Drive Assembly |
| 16 | – | Standoff (Not Spared) |
| 17 | – | Media Roll Heater (Not Spared) (50/60 Hz) (REP 7.10A) |
| 18 | 009E43260 | Motor Spring |

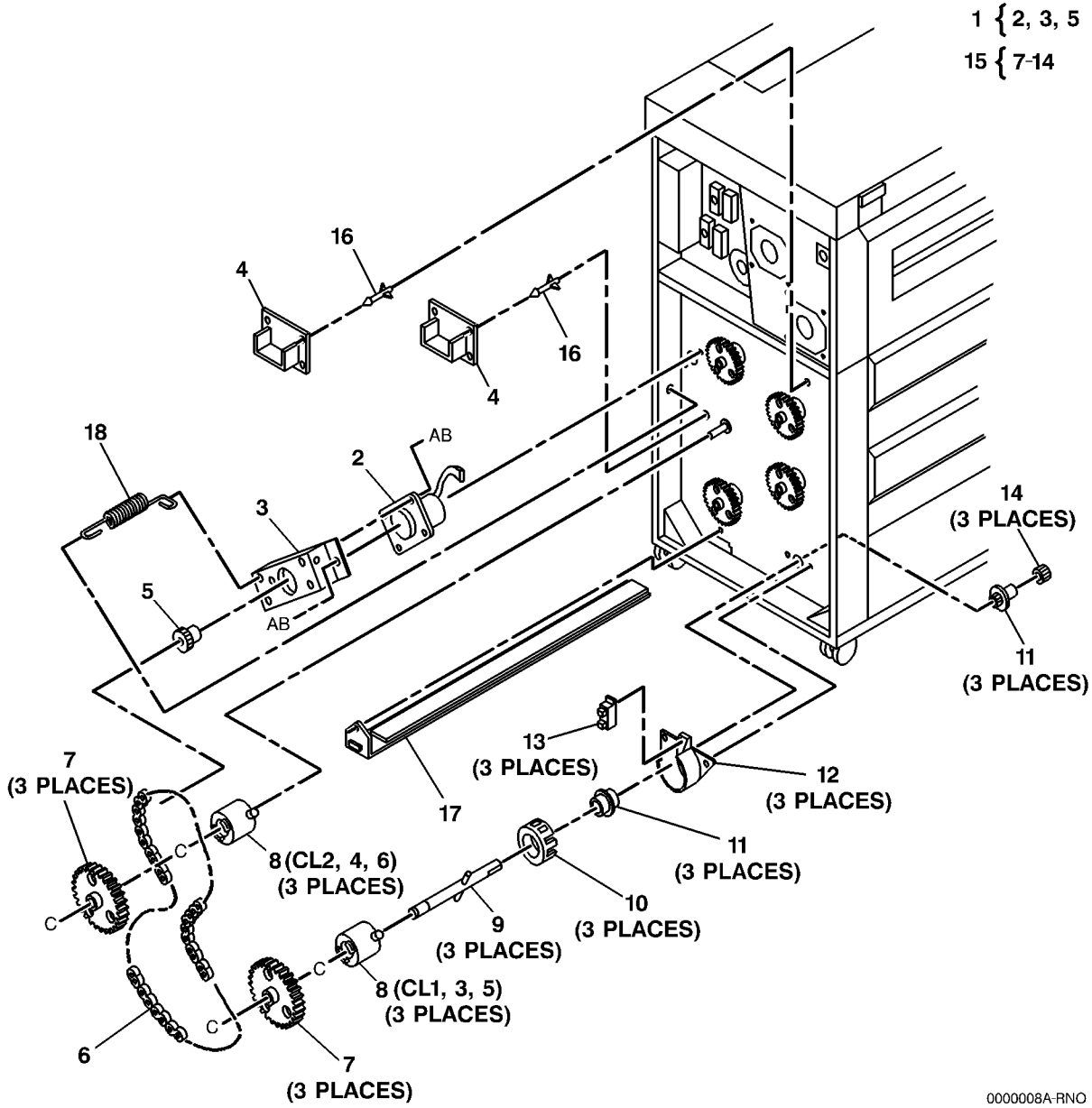

# PL 7.3 Roll Supply Drawer Components (Part 1 of 4)

| Item | Part | Description |
|---|---|---|
| 1 | – | Part of Roll Supply Drawer Assembly (REF: PL 7.1 Item 3) |
| 2 | 022E11540 | Support Roller |
| 3 | 007E14650 | Rewind Internal Gear (20T) (REP 7.2) |
| 4 | 029E14760 | LH Support Pin |
| 5 | – | LH Cradle Bracket (P/O PL 7.3 Item 1) |
| 6 | – | Drawer Frame (P/O PL 7.3 Item 1) |
| 7 | – | LH Roll Lock (P/O PL 7.3 Item 1) |
| 8 | 003E17610 | Roll Lock |
| 9 | 009E27340 | Roll Lock Spring |
| 10 | 029E12930 | Rewind Shaft |
| 11 | 007E14600 | Rewind Gear (32T) (REP 7.2) |

1{2-11

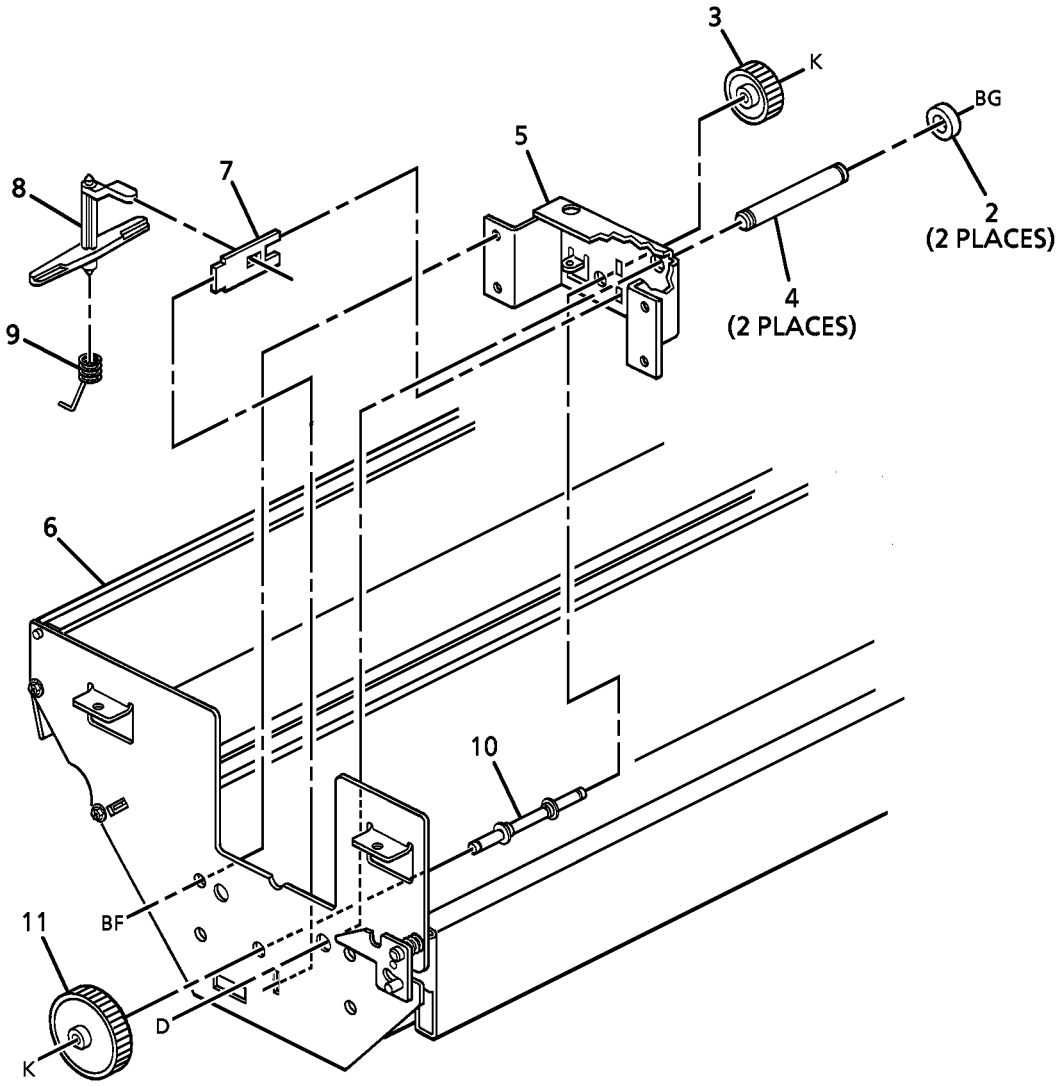


0000009A-RNO

# PL 7.4 Roll Supply Drawer Components (Part 2 of 4)

| Item | Part | Description |
|---|---|---|
| 1 | – | Part of Roll Supply Drawer Assembly (REF: PL 7.1 Item 3) |
| 2 | – | RH Roll Lock (P/O PL 7.4 Item 1) |
| 3 | 003E17610 | Roll Lock |
| 4 | 009E27340 | Roll Lock Spring |
| 5 | – | RH Cradle Bracket (P/O PL 7.4 Item 1) |
| 6 | 029E14750 | RH Support Pin |
| 7 | 022E11540 | Support Roller |
| 8 | – | Drawer Frame (P/O PL 7.4 Item 1) |

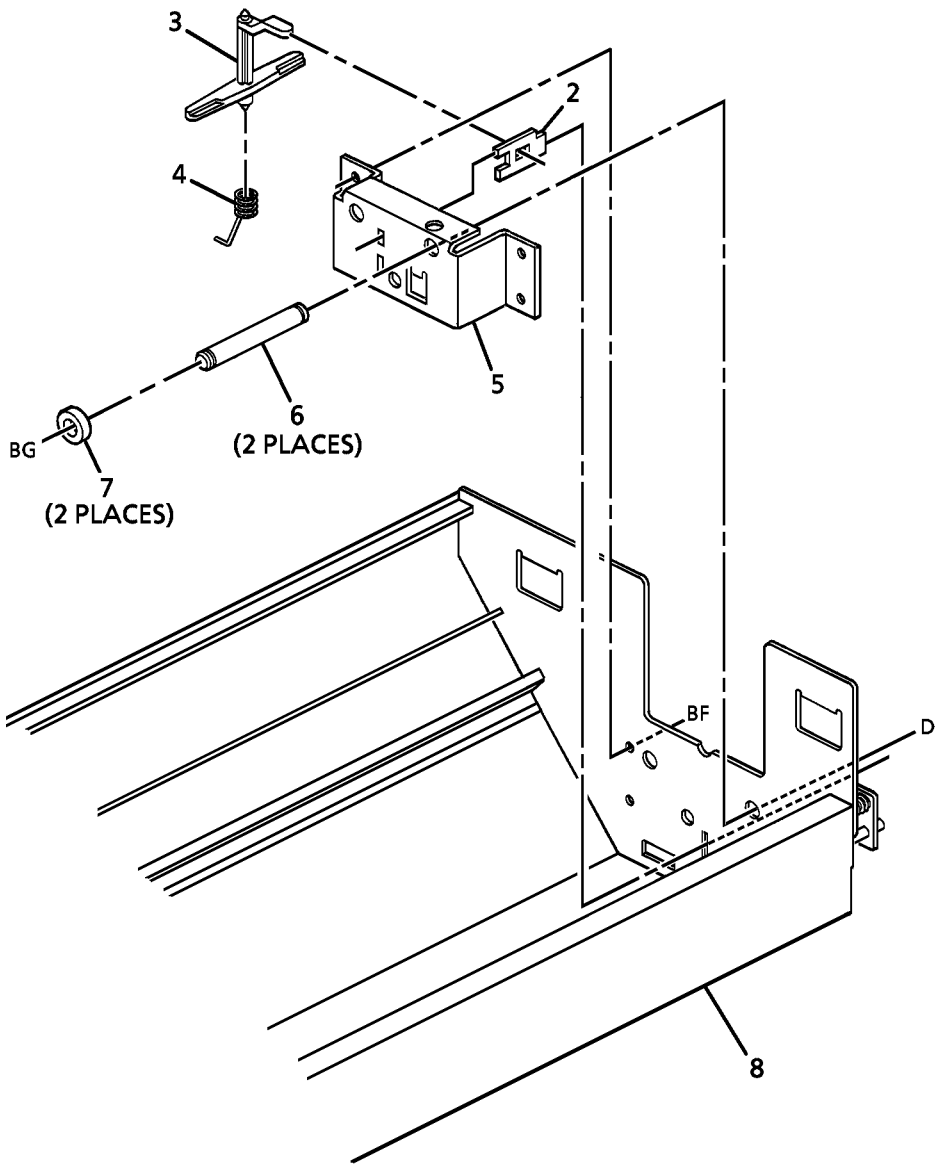

# PL 7.5 Roll Supply Drawer Components (Part 3 of 4)

| Item | Part | Description |
|---|---|---|
| 1 | – | Part of Roll Supply Drawer Assembly (REF: PL 7.1 Item 3) |
| 2 | – | Drawer Frame (P/O PL 7.5 Item 1) |
| 3 | 017E04250 | Baffle Stop |
| 4 | 068E17221 | Bracket |
| 5 | 009E27351 | Pinch Roll Spring |
| 6 | – | Pinch Roll Shaft (P/O PL 7.5 Item 1) |
| 7 | 022E10060 | Roll Feed Pinch Roll (REP 7.3) |
| 8 | – | Lock Release Handle (P/O PL 7.5 Item 1) |
| 9 | 009E32790 | Lock Spring |
| 10 | 029E14460 | Retainer |
| 11 | – | Latch (P/O PL 7.5 Item 1) |
| 12 | 009E27330 | Drawer Latch Spring |
| 13 | 029E13701 | Latch Pin |
| 14 | – | Supply Drawer Latch (P/O PL 7.5 Item 1) |
| 15 | 003K07581 | Handle |
| 16 | 003E39000 | Drawer Handle (W/O TAG 32) |
| – | 003E39001 | Drawer Handle (W/TAG 32) |
| 17 | 048K44880 | Drawer Cover |
| 18 | 038K09190 | Paper Guide |
| 19 | 121E07680 | Magnet |
| 20 | 048E39380 | Kickplate |
| 21 | 891E01960 | Drawer Label |
| – | 891E01961 | Drawer Label (Optional Drawer) |

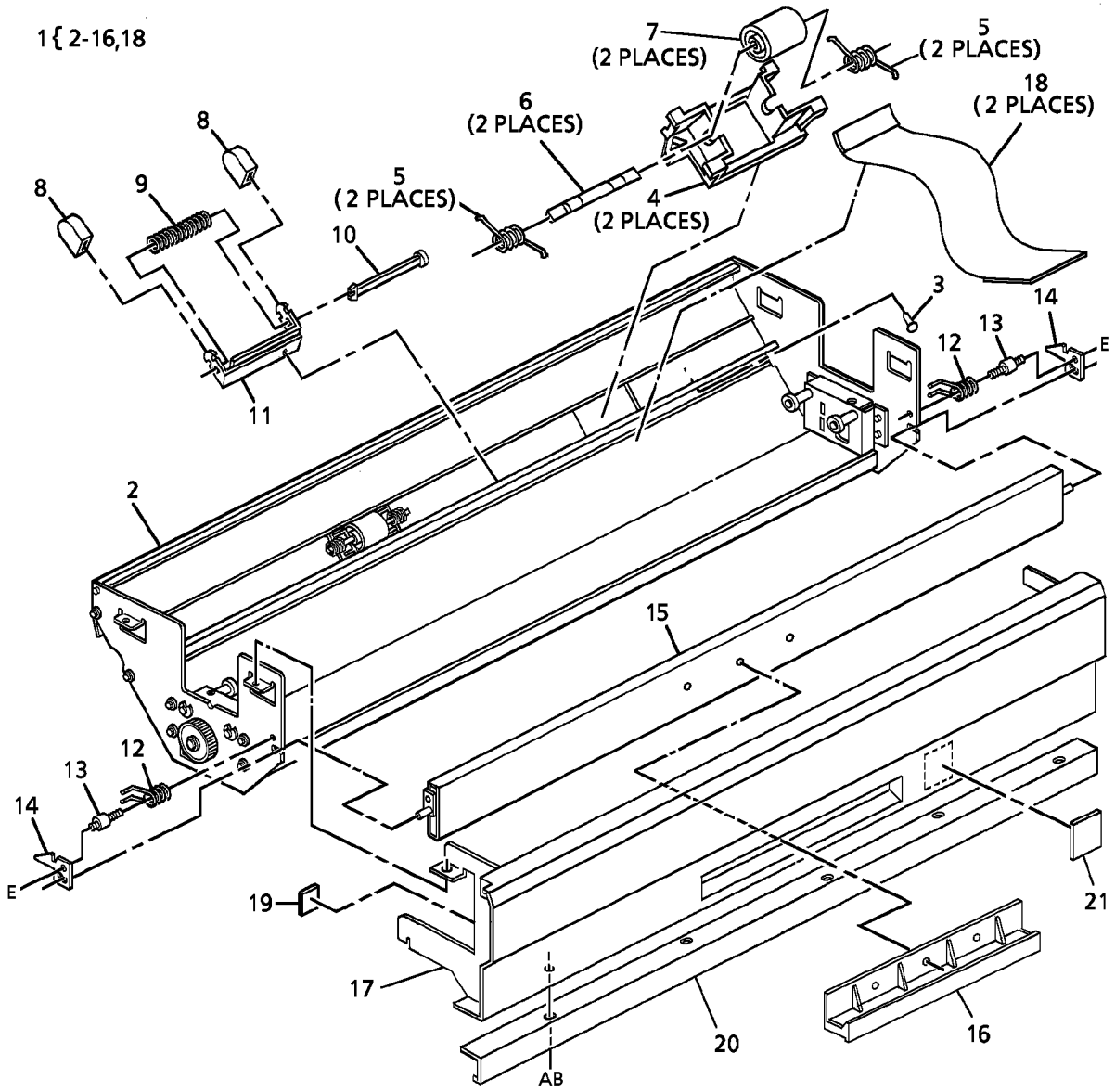

# PL 7.6 Roll Supply Drawer Components (Part 4 of 4)

| Item | Part | Description |
|---|---|---|
| 1 | – | Part of Roll Supply Drawer Assembly (REF: PL 7.1 Item 3) |
| 2 | 052K03580 | Roll Support Tube Assembly |
| 3 | 092E22541 | Label (Push Here) |
| 4 | 092E36431 | Label (Media Lead) |
| 5 | – | Drawer Frame (P/O PL 7.6 Item 1) |
| 6 | 092E22560 | Label (Pinch Arrows) |
| 7 | 600K89510 | Mylar baffle Extension Kit (W/TAG 31) |

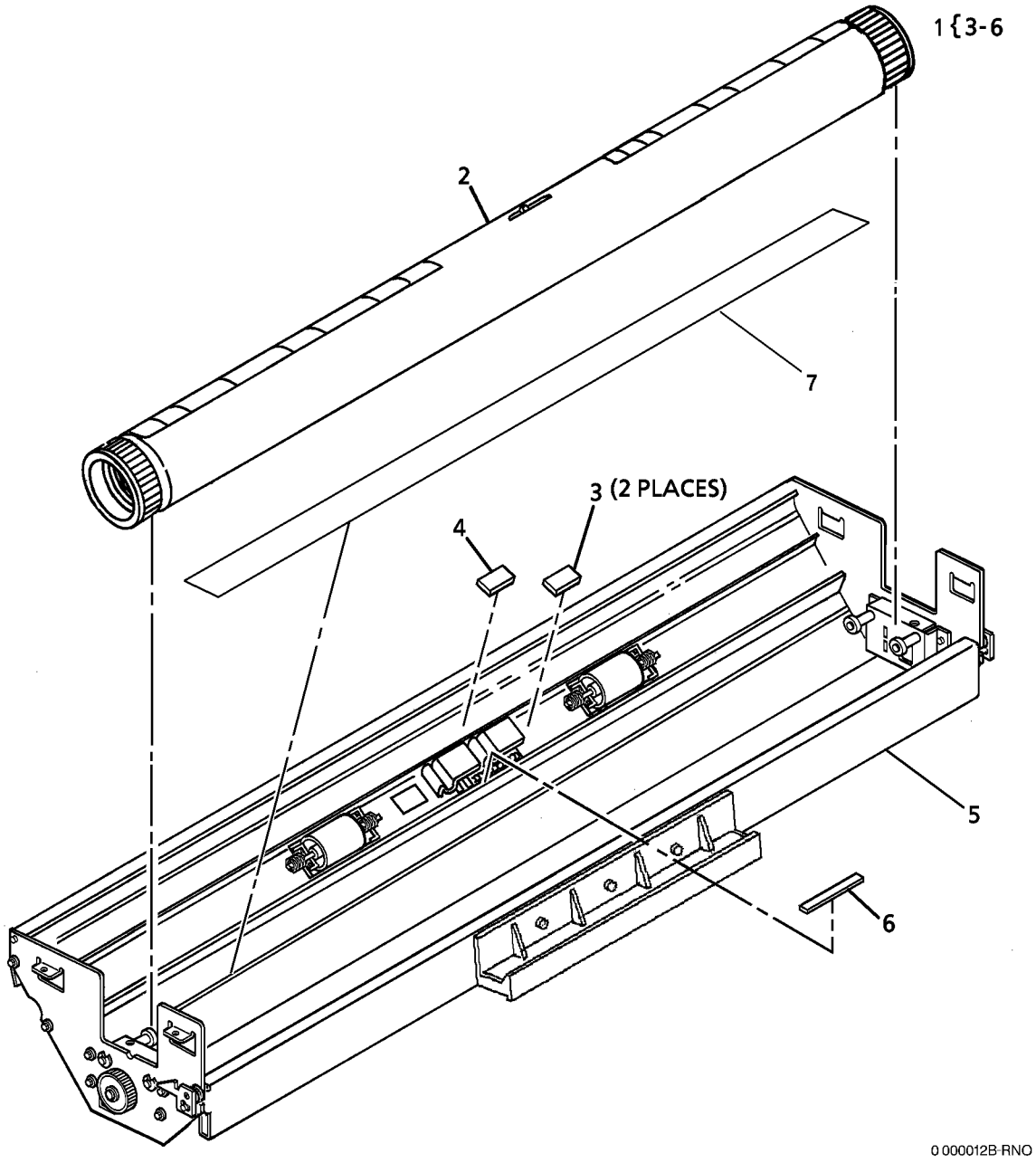

# PL 7.7 Media Cutter Assembly

| Item | Part | Description |
|---|---|---|
| 1 | 037K01100 | Media Cutter Assembly |
| 2 | – | Media Cutter (P/O PL 7.7 Item 1) |
| 3 | – | Bracket (Not Spared) |
| 4 | 003E18781 | Latch |
| 5 | 010K01360 | Media Cutter Slide |
| 6 | 110E02640 | Media Cutter Cover Interlock Switch (S1) |
| 7 | – | Bracket (Not Spared) |
| 8 | – | Cutter Cover (P/O PL 7.7 Item 1) |
| 9 | 011E04470 | Cutter Interlock Actuator Lever |
| 10 | 413W31054 | Bearing |
| 11 | 120E02160 | Twist Clamp |

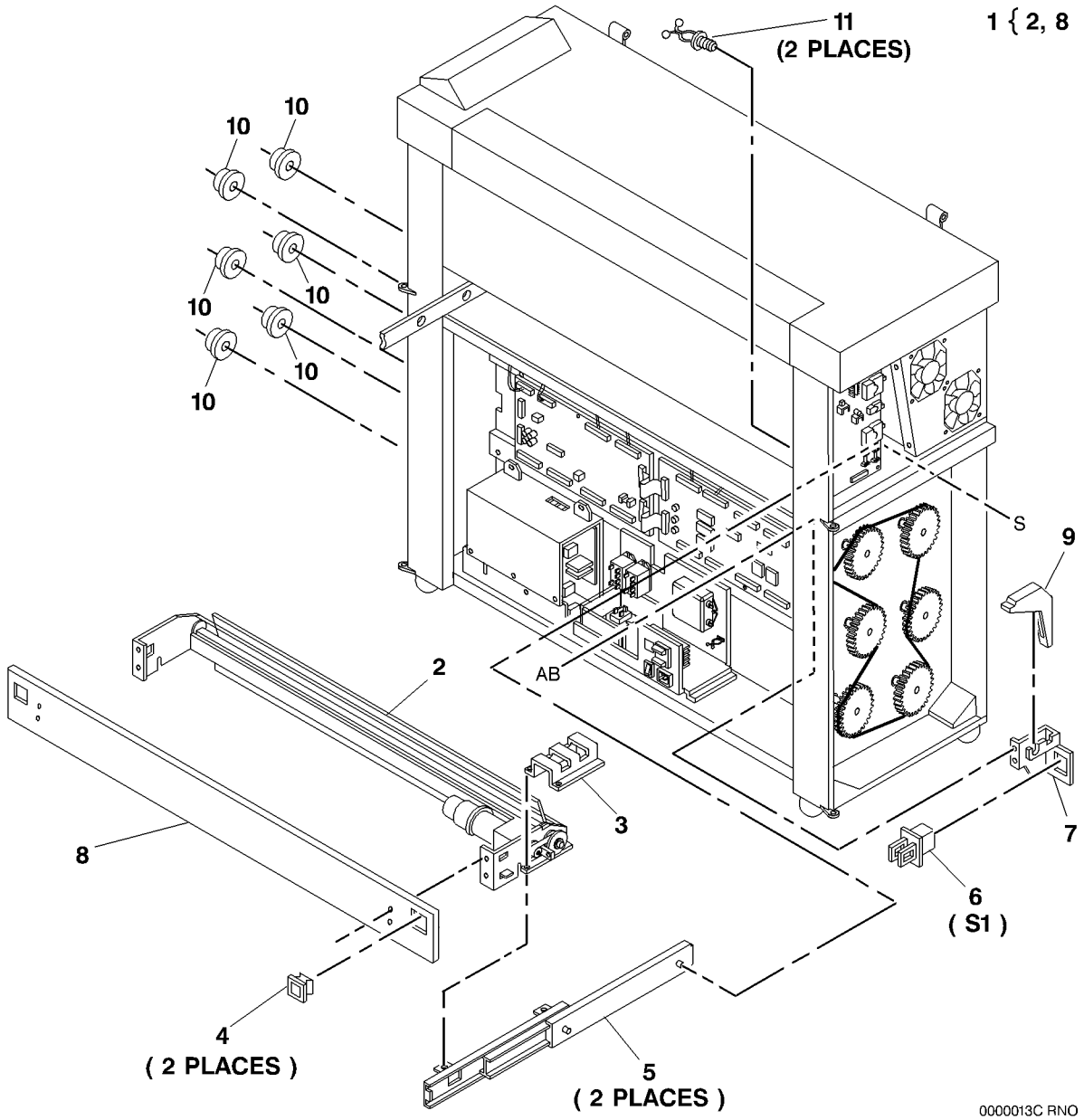

# PL 7.8 Media Cutter Components

| Item | Part | Description |
|---|---|---|
| 1 | – | Part of Media Cutter Assembly (REF: PL 7.7 Item 1) |
| 2 | 038K06601 | Media Exit Guide |
| 3 | 009E30860 | LH Spring |
| 4 | – | Cutter Stationary Bar (P/O PL 7.8 Item 1) |
| 5 | 009E30870 | RH Spring |
| 6 | 028E07430 | Retaining Ring |
| 7 | 020E18830 | Cutter Drive Pulley |
| 8 | – | Sensor Bracket (P/O PL 7.8 Item 1) |
| 9 | 130E03250 | Cutter Home Sensor (REP 8.15) |
| 10 | 423W57550 | Drive Belt |
| 11 | 020E20680 | Drive Pulley (34T) |
| 12 | 003E16521 | Cutter Latch |
| 13 | 009E27340 | Latch Spring |
| 14 | 127K26580 | Cutter Motor |
| 15 | – | Media Cutter Frame (P/O PL 7.8 Item 1) |

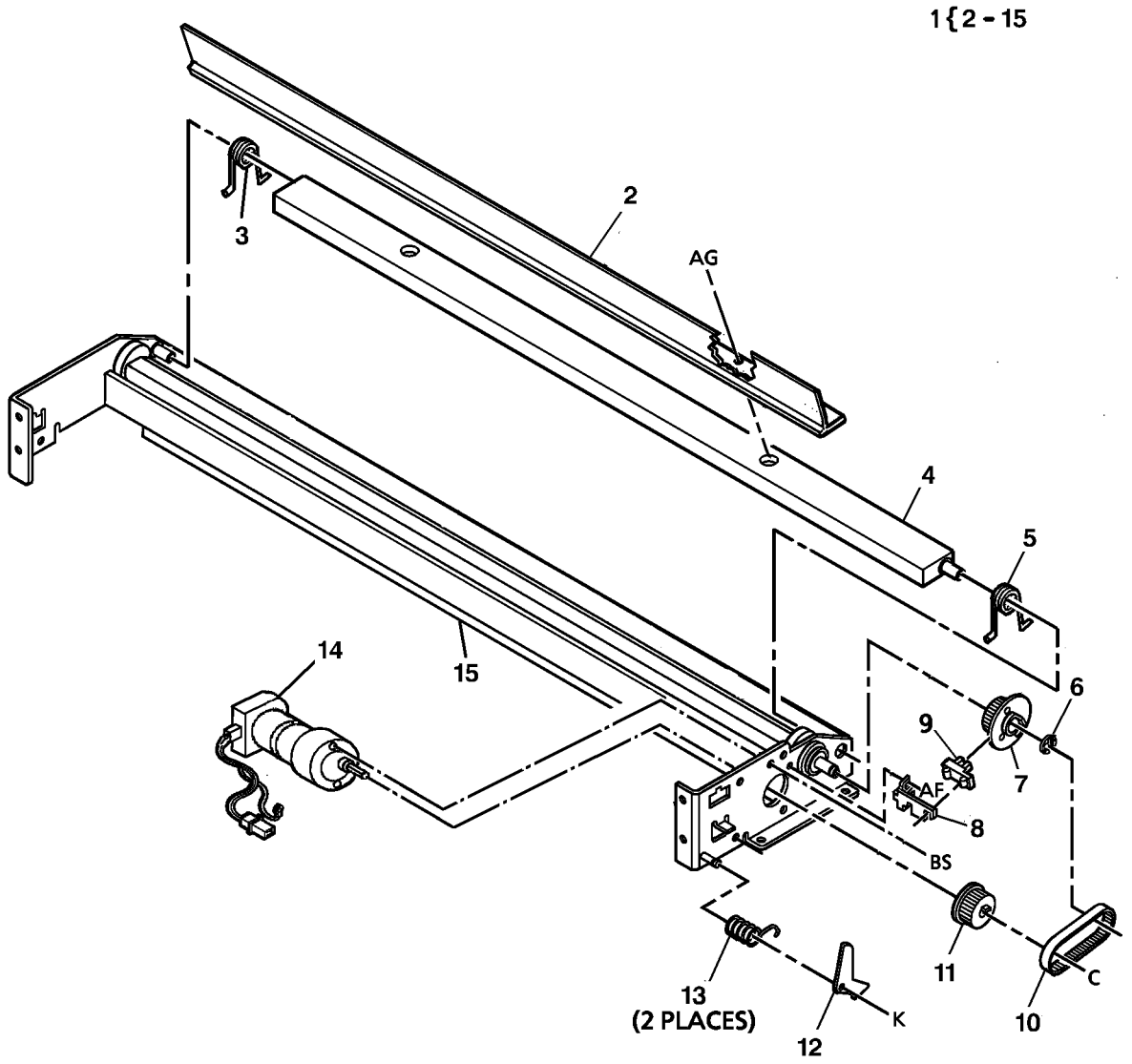

# PL 8.1 Media Transport Assembly

| Item | Part | Description |
|---|---|---|
| 1 | 423W72201 | Sheet Drive Belt |
| 2 | 020E13853 | Sheet Drive Pulley |
| 3 | 026E11970 | Shoulder Screw |
| 4 | 022K63750 | Media Transport Assembly (8825) (W/O TAG 89) (REP 8.1,ADJ 8.1) |
| – | 022K49205 | Media Transport Assembly (8830) (W/TAG 15), Media Transport Assembly (8825) (W/TAG 89) (REP 8.1,ADJ 8.1) |
| 5 | – | Transport Drive Motor Assembly (Not Spared) |
| 6 | 020E13603 | Drive Motor Pulley |
| 7 | – | Motor Mounting Plate (P/O PL 8.1 Item 5) |
| 8 | 127K04293 | Transport Drive Motor (MOT1) (REP 8.10) |
| 9 | 022E11441 | Idler Roller |
| 10 | 020E12353 | Registration Drive Pulley |
| 11 | 423W64001 | Registration Drive Belt (REP 8.13) |
| 12 | 120E02160 | Twist Clamp |
| 13 | 052E07910 | Moisture Collection Tube |
| 14 | 093E01501 | Moisture Collection Bottle |
| 15 | 029K01111 | Pin |
| 16 | – | Bracket (Not Spared) |
| 17 | 121K10612 | Clutch (REP 8.4) |
| 18 | – | Bottle Cap (Not Spared) |
| 19 | 009E32510 | Compression Spring |
| 20 | 017E07221 | Clutch Brake |
| 21 | 020E26340 | Gear Pulley |
| 22 | 020E26350 | Exit Drive Pulley |
| 23 | 423W59001 | Belt |
| 24 | 020K08080 | Clutch Pulley |

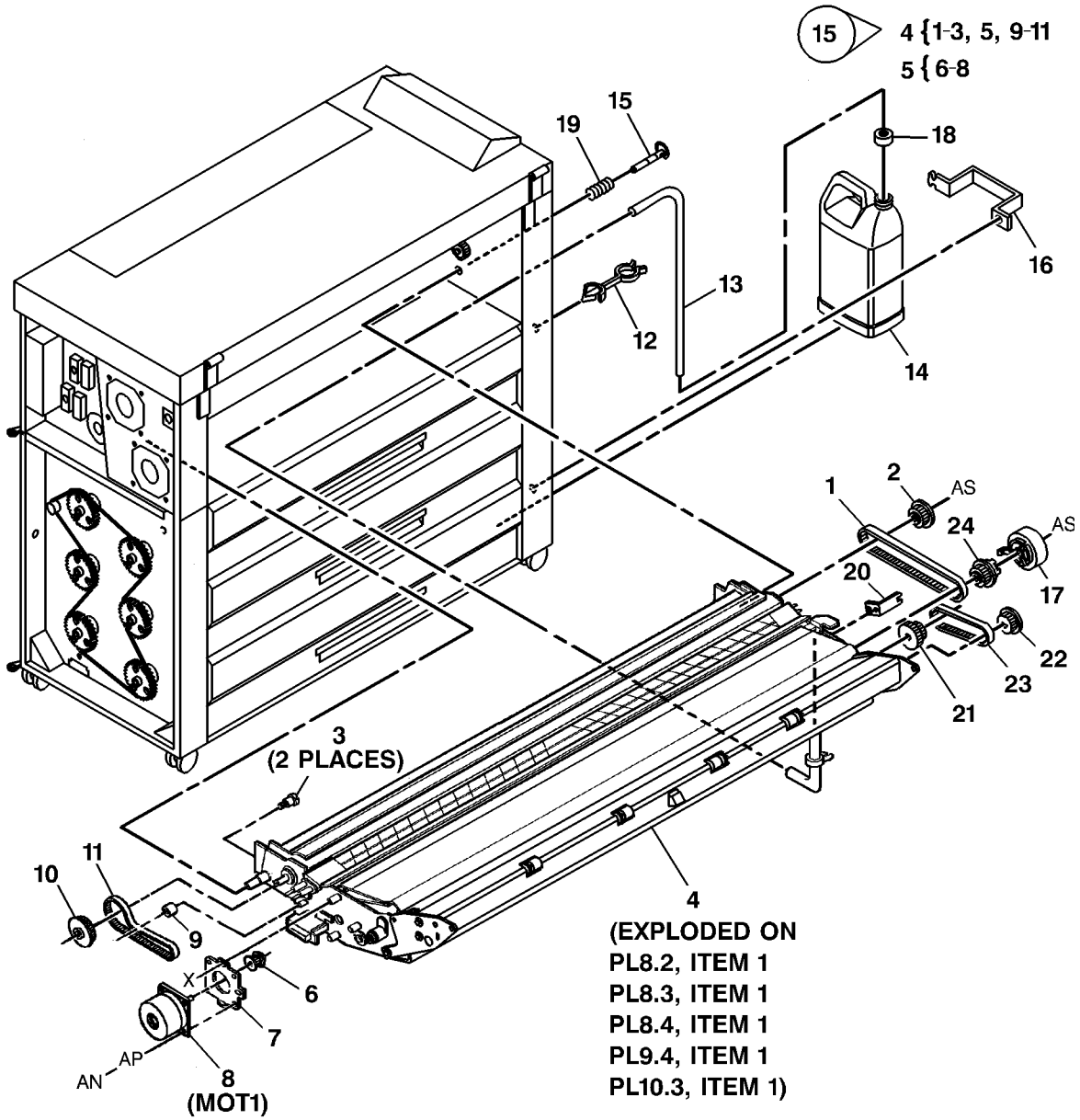

# PL 8.2 Media Registration Components

| Item | Part | Description |
|---|---|---|
| 1 | – | Part of Media Transport Assembly (REF: PL 8.1 Item 4) |
| 2 | – | Registration Support Assembly (P/O PL 8.2 Item 1) |
| 3 | – | Registration Support (P/O PL 8.2 Item 2) |
| 4 | 130E05990 | Media Registration Sensor (Q1) (REP 8.8) |
| 5 | 030K37830 | Registration Sensor Bracket |
| 6 | 016E06020 | Bushing |
| 7 | 022E10531 | Registration Pinch Roll (REP 8.12) |
| 8 | 006E42300 | Pinch Roll Shaft |
| 9 | 009E32500 | Pinch Roll Spring |
| 10 | – | Turnaround Baffle (P/O PL 8.2 Item 2) |
| 11 | 009E32480 | Registration Support Spring |
| 12 | 006K17441 | Registration Drive Roll (REP 8.17) |
| 13 | 413W31054 | Bearing |
| 14 | – | Media Transport Frame (P/O PL 8.2 Item 1) |
| 15 | 016E08931 | Bushing |

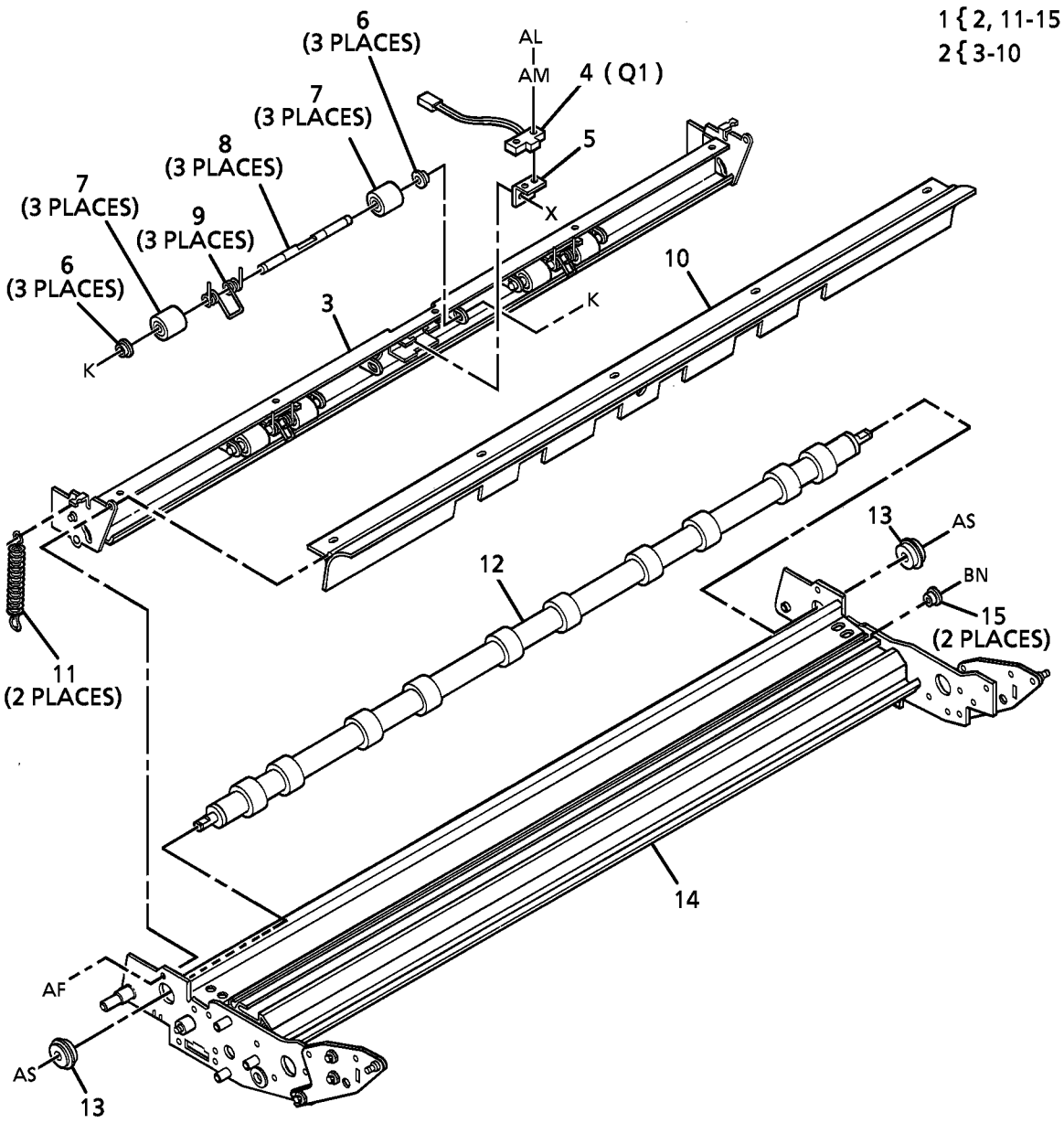

# PL 8.3 Cut Sheet Feed Components

| Item | Part | Description |
|---|---|---|
| 1 | – | Part of Media Transport Assembly (REF: PL 8.1 Item 4) |
| 2 | – | Media Transport Frame (P/O PL 8.3 Item 1) |
| 3 | 019E14350 | Drag Brake (8830), Drag Brake (8825) (W/TAG 90) |
| 4 | 006K15682 | Sheet Drive Roll (8830) (REP 8.7), Sheet Drive Roll (8825) (W/TAG 90) (REP 8.7) |
| 5 | – | Sheet Support Assembly (P/O PL 8.3 Item 1) |
| 6 | – | Sheet Lower Baffle (P/O PL 8.3 Item 5) |
| 7 | 016E06020 | Bushing (8830), Bushing (8825) (W/TAG 90) |
| 8 | 022E09390 | Sheet Pinch Roll (8830) (REP 8.6), Sheet Pinch Roll (8825) (W/TAG 90) (REP 8.6) |
| 9 | 009E32490 | Sheet Pinch Spring (8830), Sheet Pinch Spring (8825) (W/TAG 90) |
| 10 | 006E23540 | Sheet Pinch Shaft (8830), Sheet Pinch Shaft (8825) (W/TAG 90) |
| 11 | – | Top Guide (P/O PL 8.3 Item 1) |
| 12 | – | Shield (P/O PL 8.3 Item 1) |

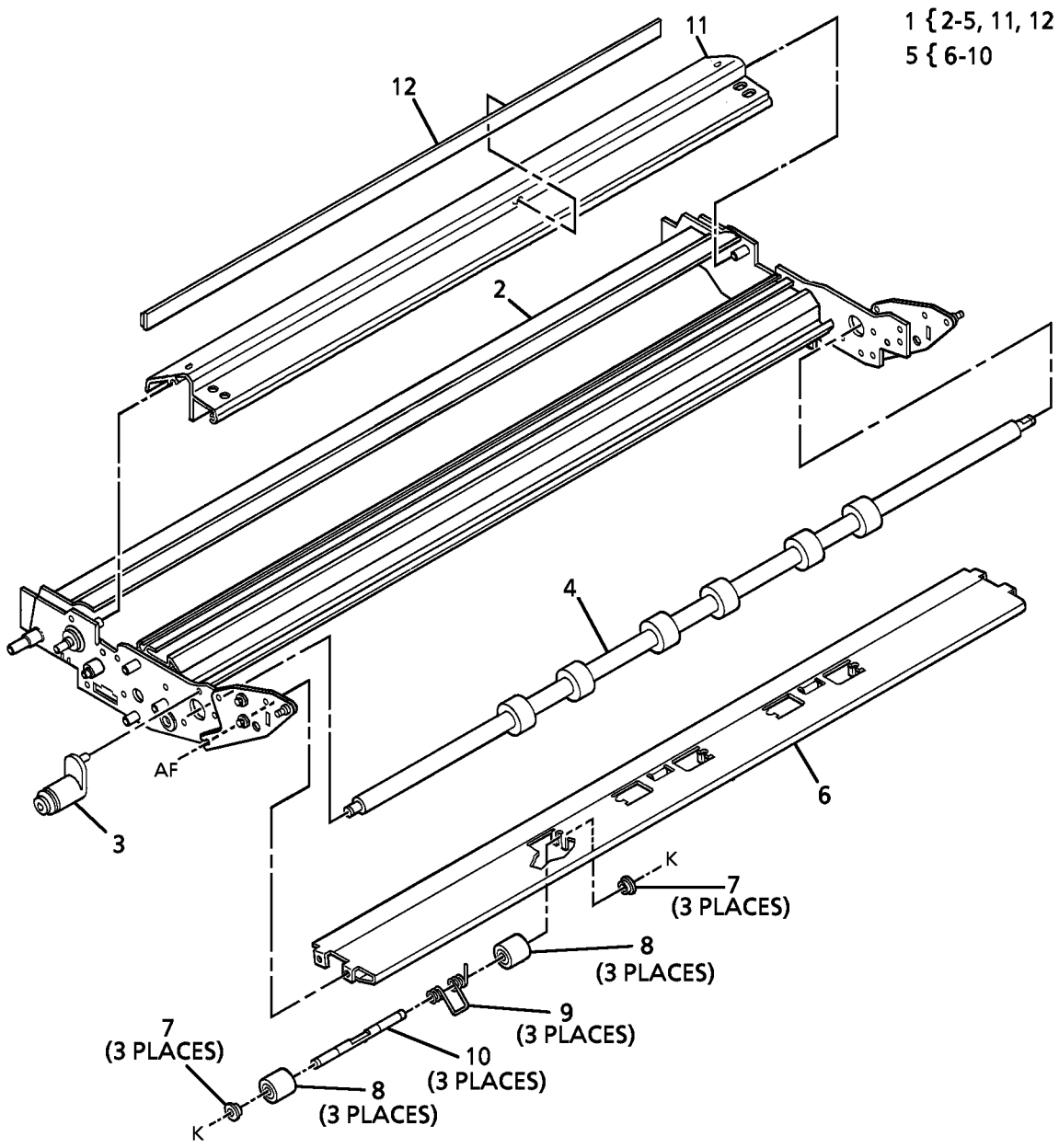

# PL 8.4 Media Transport Components

| Item | Part | Description |
|---|---|---|
| 1 | – | Part of Media Transport Assembly (REF: PL 8.1 Item 4) |
| 2 | 110K08711 | Buckle Switch (Upper) (REP 8.4), Buckle Switch (Lower) (REP 8.2) |
| 3 | – | Sensor Bracket (P/O PL 8.4 Item 1) |
| 4 | – | Transport Frame (P/O PL 8.4 Item 1) |
| 5 | 019E07100 | Cable Clip |
| 6 | – | Sheet Upper Baffle (P/O PL 8.4 Item 1) |
| 7 | 110K03731 | Sheet Feed Switch (8830), Sheet Feed Switch (8825) (W/TAG 90) |
| 8 | – | Switch Bracket (P/O PL 8.4 Item 1) |
| 9 | 049E54980 | Sensor Bracket |
| 10 | – | Exit Support (P/O PL 8.4 Item 1) |
| 11 | 006K15670 | Exit Roll (REP 8.16) |
| 12 | 032E10830 | Stacker Support |
| 13 | – | Bushing (P/O PL 8.4 Item 1) |

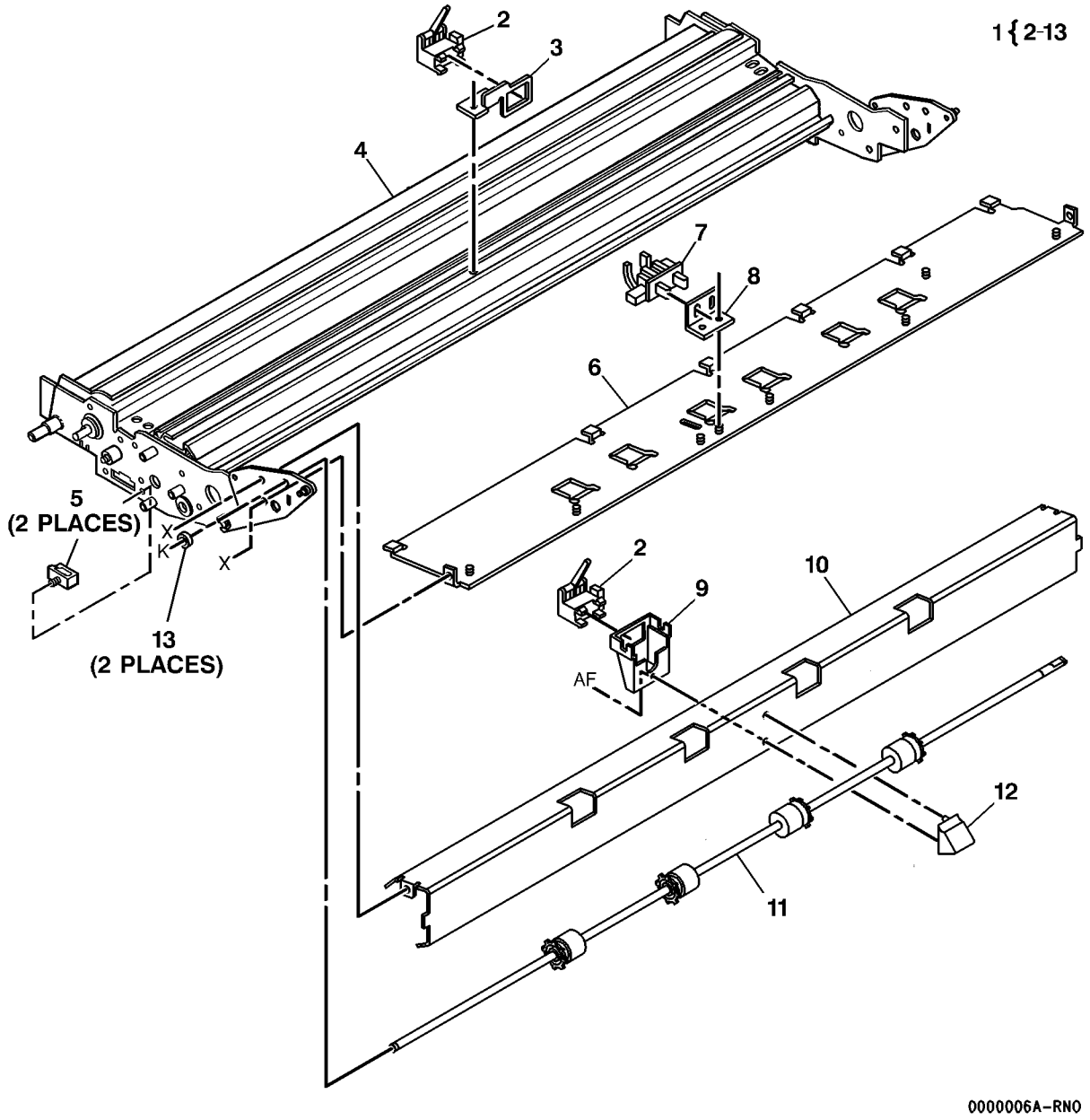

# PL 9.1 Xerographic Module Assembly

| Item | Part | Description |
|---|---|---|
| 1 | 127K17882 | Photoreceptor Drive Assembly |
| 2 | – | Photoreceptor Drive (P/O PL 9.1 Item 1) |
| 3 | 005K04151 | Coupling |
| 4 | 126K05992 | Xerographic Module Assembly (60 Hz) (REP 9.1) |
| – | 126K07152 | Xerographic Module Assembly (50 Hz) (REP 9.1) |
| 5 | 053E04750 | Ozone Filter |

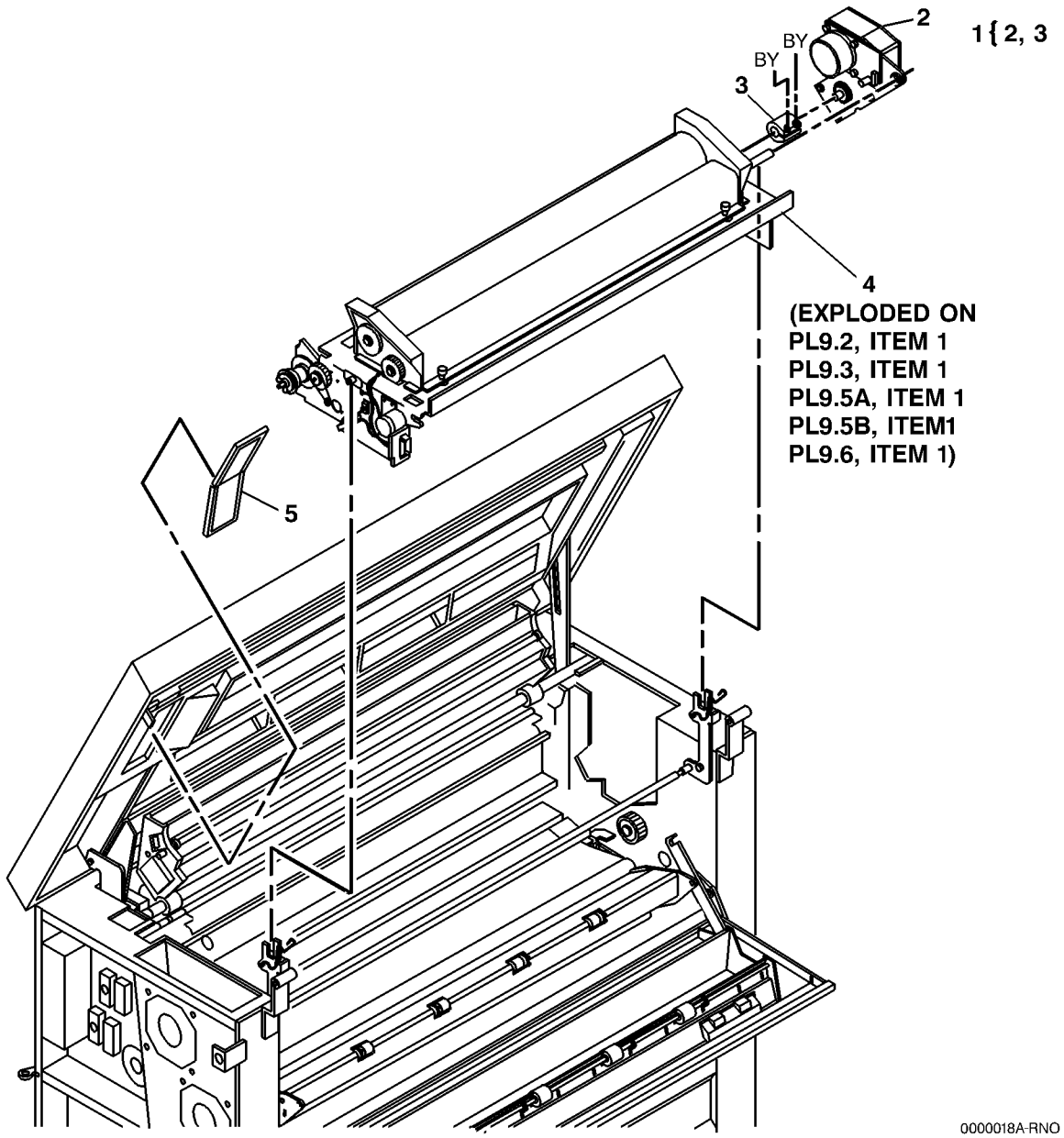

## PL 9.2 Photoreceptor

| Item | Part | Description |
|---|---|---|
| 1 | – | Part of Xerographic Module Assembly (REF: PL 9.1 Item 4) |
| 2 | – | Xerographic Frame (P/O PL 9.2 Item 1) |
| 3 | 006K15640 | Shaft Assembly |
| 4 | 013K00380 | Bearing |
| 5 | 028E11470 | Bearing Retainer |
| 6 | – | Bearing (P/O PL 9.2 Item 3) |
| 7 | 005K04131 | RH End Cap |
| 8 | – | Shaft (P/O PL 9.2 Item 3) |
| 9 | 005K04201 | LH Hub |
| 10 | 230W00652 | Wing Nut |
| 11 | 007E01340 | Toner Auger Drive Gear |
| 12 | 030E16161 | Ground Clip |
| 13 | – | Bearing (P/O PL 9.2 Item 1) |
| 14 | 001R00535 | Photoreceptor (REP 9.3) |
| 15 | 604K00440 | Foam Damper Kit (3/Kit) |

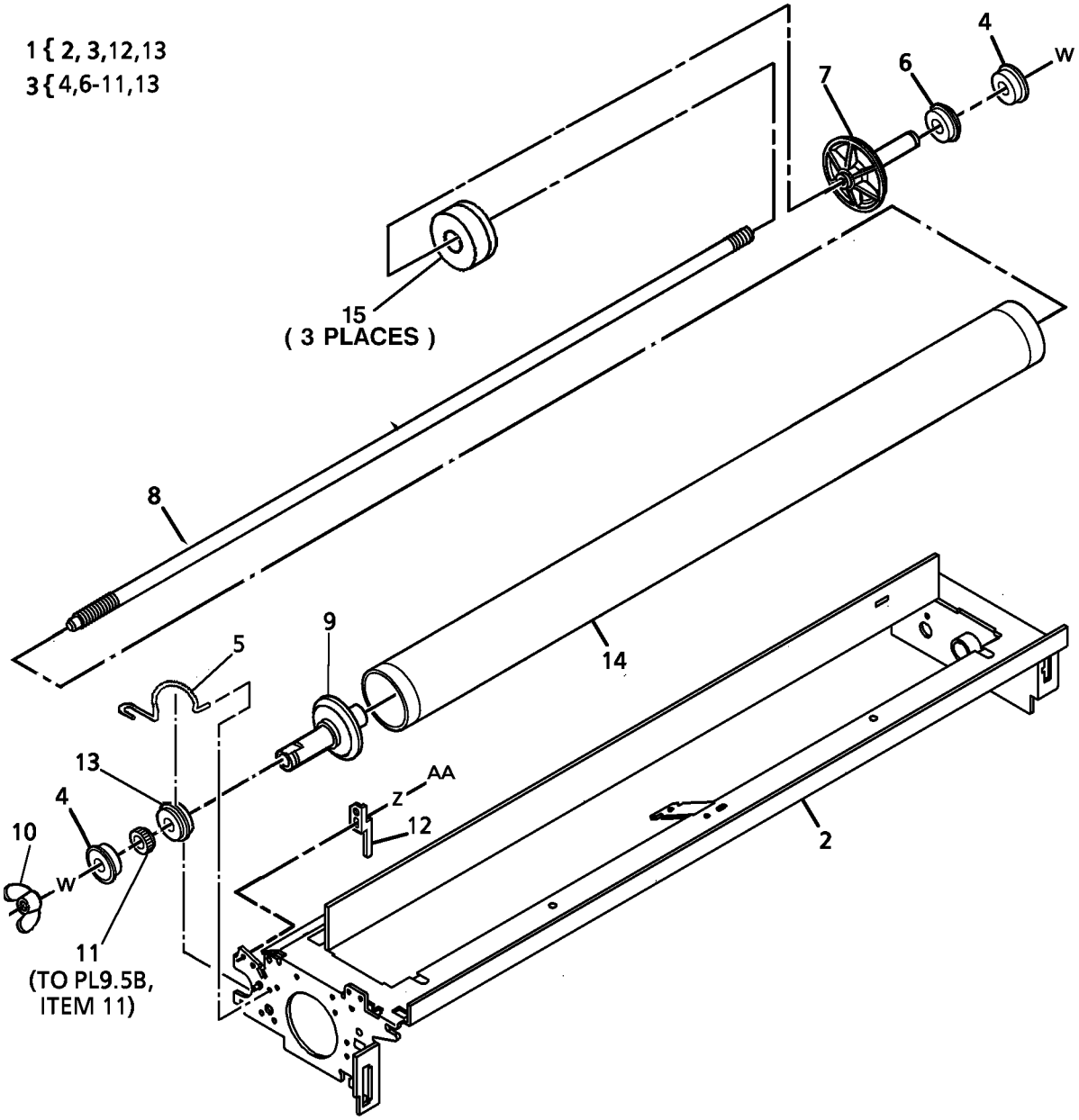

# PL 9.3 Image Module Assembly

| Item | Part | Description |
|---|---|---|
| 1 | – | Part of Xerographic Module Assembly (REF: PL 9.1 Item 4) |
| 2 | 125K02220 | Scorotron Assembly |
| 3 | 026E57690 | Screw (M4 X 30) |
| 4 | 062E08051 | Screen |
| 5 | – | Right End Block (P/O PL 9.3 Item 2) |
| 6 | 600K58750 | Pin Array Kit (REP 9.8) |
| 7 | – | Spring (P/O PL 9.3 Item 6) |
| 8 | – | Pin Array (P/O PL 9.3 Item 6) |
| 9 | – | Center Support (P/O PL 9.3 Item 2) |
| 10 | – | Scorotron Extrusion (P/O PL 9.3 Item 2) |
| 11 | 600K58730 | Left End Block Kit |
| 12 | – | Left End Block (P/O PL 9.3 Item 11) |
| 13 | 035E41210 | Seal |
| 14 | 600K58761 | Image Module Assembly Kit (W/ TAG 28) |
| 15 | 600K58740 | Roller Kit |
| 16 | – | Roller (P/O PL 9.3 Item 15) |
| 17 | – | Pin (P/O PL 9.3 Item 15) |
| 18 | – | Cover (P/O PL 9.3 Item 14) |
| 19 | – | Harness (P/O PL 9.3 Item 14) |
| 20 | 160K30980 | Circuit Board (W/O TAG 28) |
| – | 160K63410 | Circuit Board (W/TAG 28) |
| 21 | 021E07660 | Cap Plug |
| 22 | 035E37240 | Gasket |

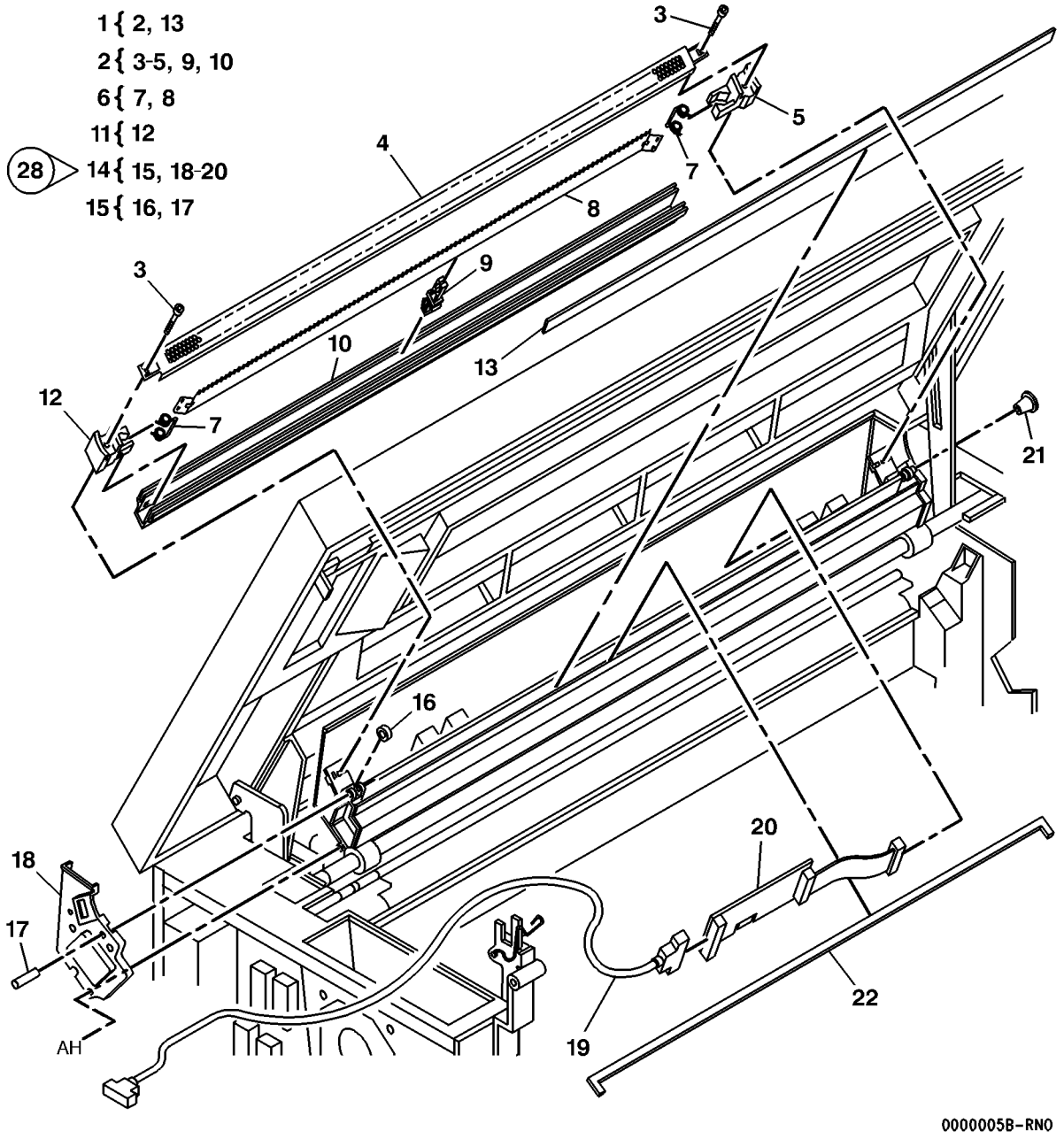

# PL 9.4 Transfer/Detack Corotron

| Item | Part | Description |
|---|---|---|
| 1 | – | Part of Media Transport Assembly (REF: PL 8.1 Item 4) |
| 2 | – | Transport Frame (P/O PL 9.4 Item 1) |
| 3 | 019E16080 | Left Corotron Clamp |
| 4 | 019E19971 | Right Corotron Clamp |
| 5 | 125K02580 | Transfer/Detack Corotron (REP 9.9) |
| 6 | 038E06610 | Rear Detack Corotron Shield |
| 7 | 038E06620 | Front Detack Corotron Shield |
| 8 | 004E00502 | Foam Damper |
| 9 | 600K37740 | Corotron Repair Kit |

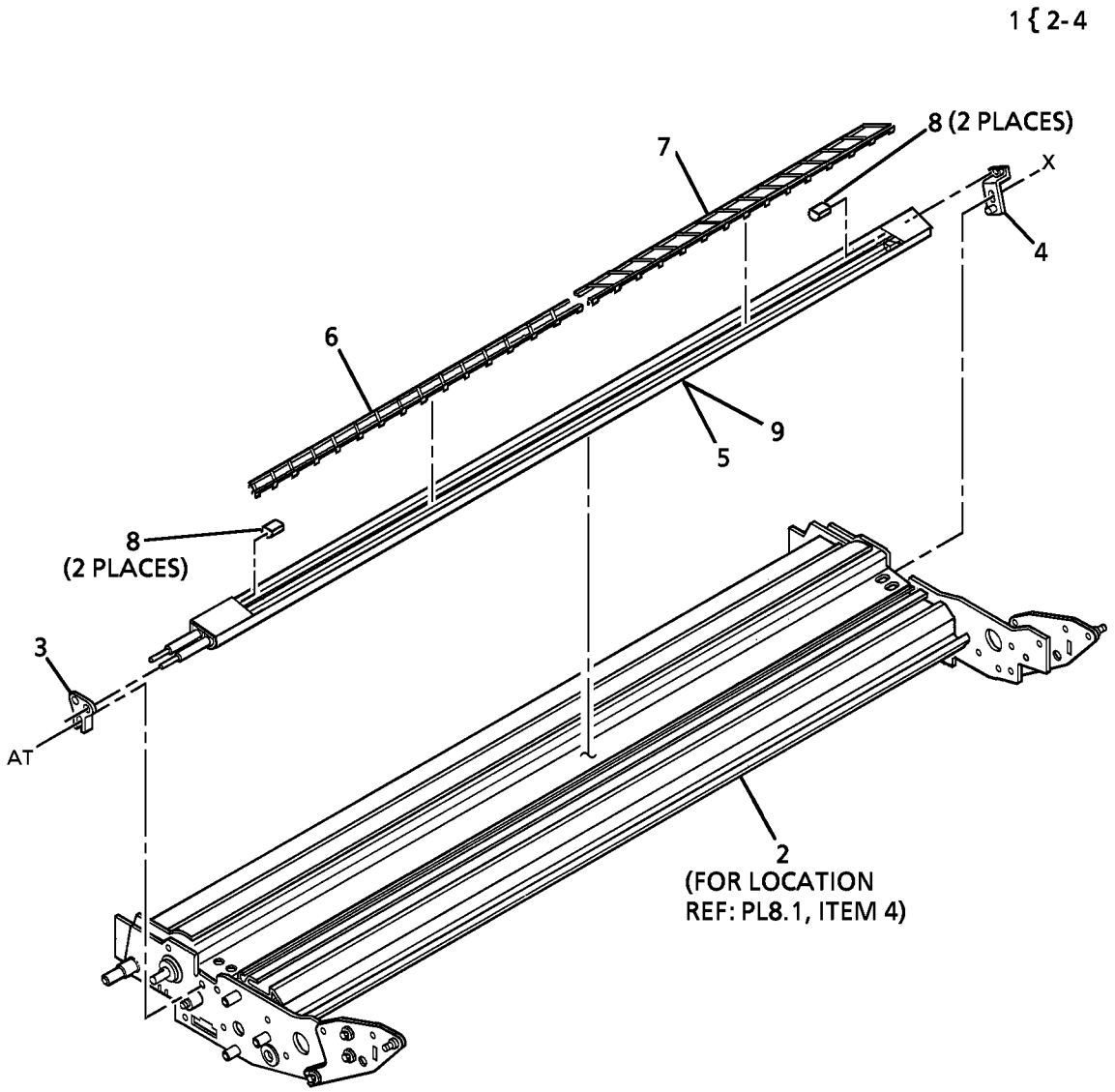

# PL 9.5A Drum Cleaning (Part 1 of 3)

| Item | Part | Description |
|---|---|---|
| 1 | – | Part of Xerographic Module Assembly (REF: PL 9.1 Item 4) |
| 2 | – | Xerographic Frame (P/O PL 9.5A Item 1) |
| 3 | 600K59060 | Cleaning Blade Kit (REP 9.4) |
| 4 | – | Blade Seal (P/O PL 9.5A Item 3) |
| 5 | – | Cleaner Blade Retainer (P/O PL 9.5A Item 3) |
| 6 | – | Cleaner Blade (P/O PL 9.5A Item 3) |
| 7 | 101K25780 | Discharge LED |
| 8 | – | Blade Seal (P/O PL 9.5A Item 3) |

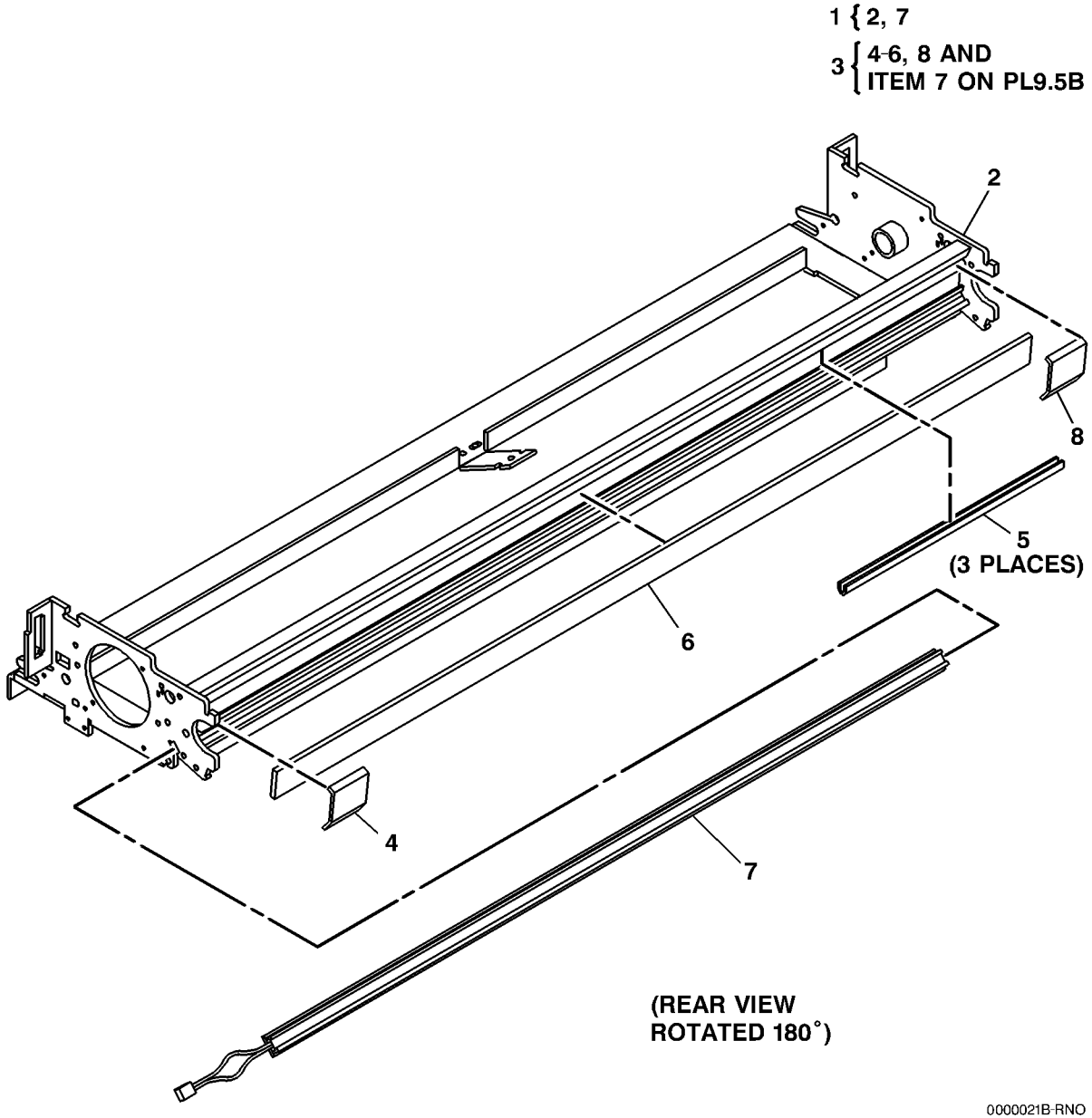

# PL 9.5B Drum Cleaning (Part 2 of 3)

| Item | Part | Description |
|---|---|---|
| 1 | – | Part of Xerographic Module Assembly (REF: PL 9.1 Item 4) |
| 2 | 007E05221 | Auger Gear Pulley |
| 3 | 023E01620 | Auger Drive Belt |
| 4 | 020E04350 | Auger Pulley |
| 5 | 013E00803 | Auger Bearing |
| 6 | 094K00085 | Waste Toner Auger |
| 7 | 035K05790 | Photoreceptor Seal (Part of Cleaning Blade Kit) (REF: PL 9.5A Item 3) (REP 9.17) |
| 8 | 600K08481 | Media Deflector Kit (7/Kit) |
| 9 | – | Media Guide (P/O PL 9.5B Item 8) |
| 10 | – | Xerographic Frame (P/O PL 9.5B Item 1) |
| 11 | – | Housing (P/O PL 9.5B Item 1) |

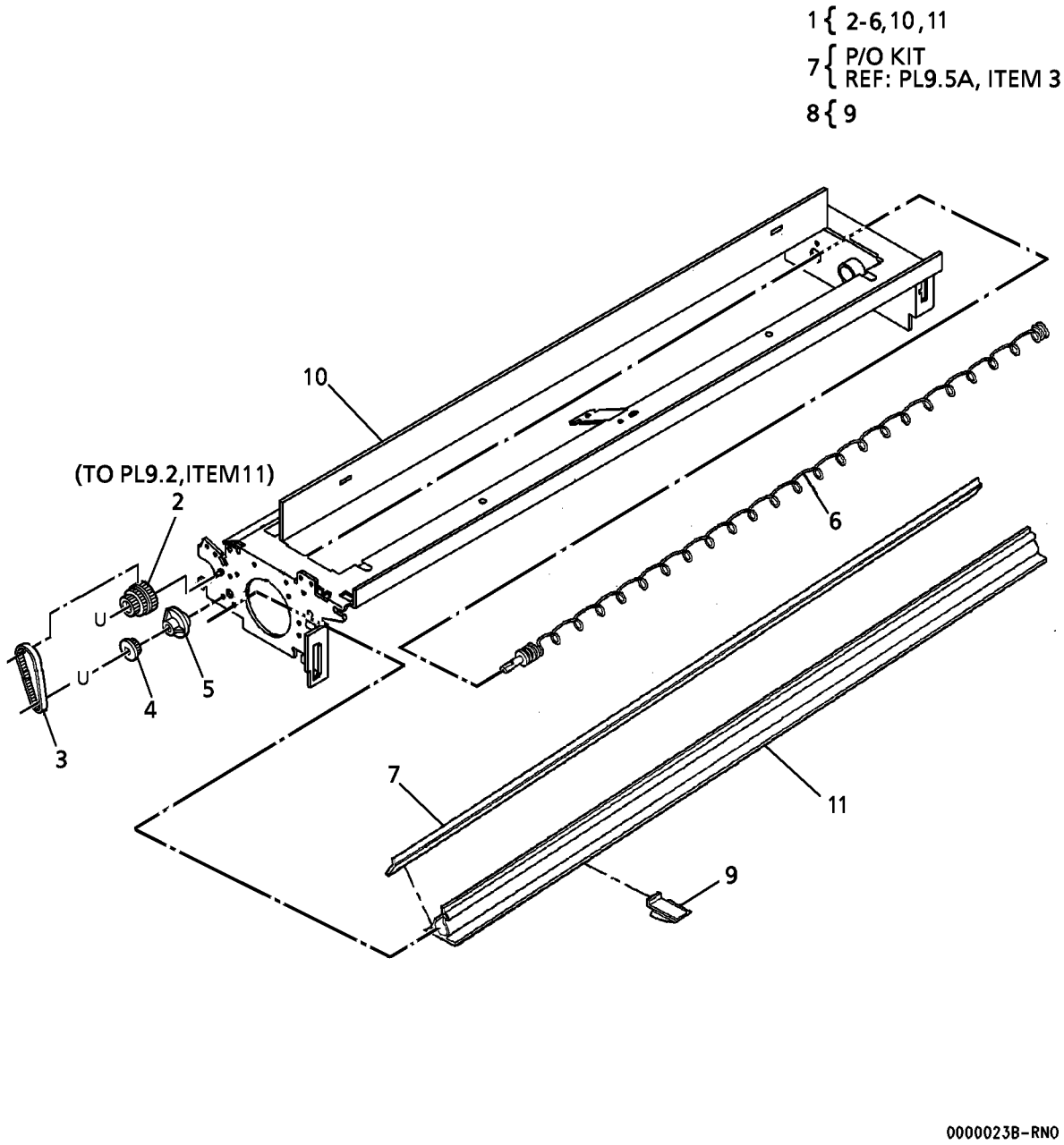

# PL 9.5C Drum Cleaning (Part 3 of 3)

| Item | Part | Description |
|---|---|---|
| 1 | 035K05950 | Toner Exit Seal |
| 2 | 054E06533 | Toner Waste Tube |
| 3 | 035K05941 | Waste Bracket Seal |
| 4 | 093K02420 | Toner Bottle |

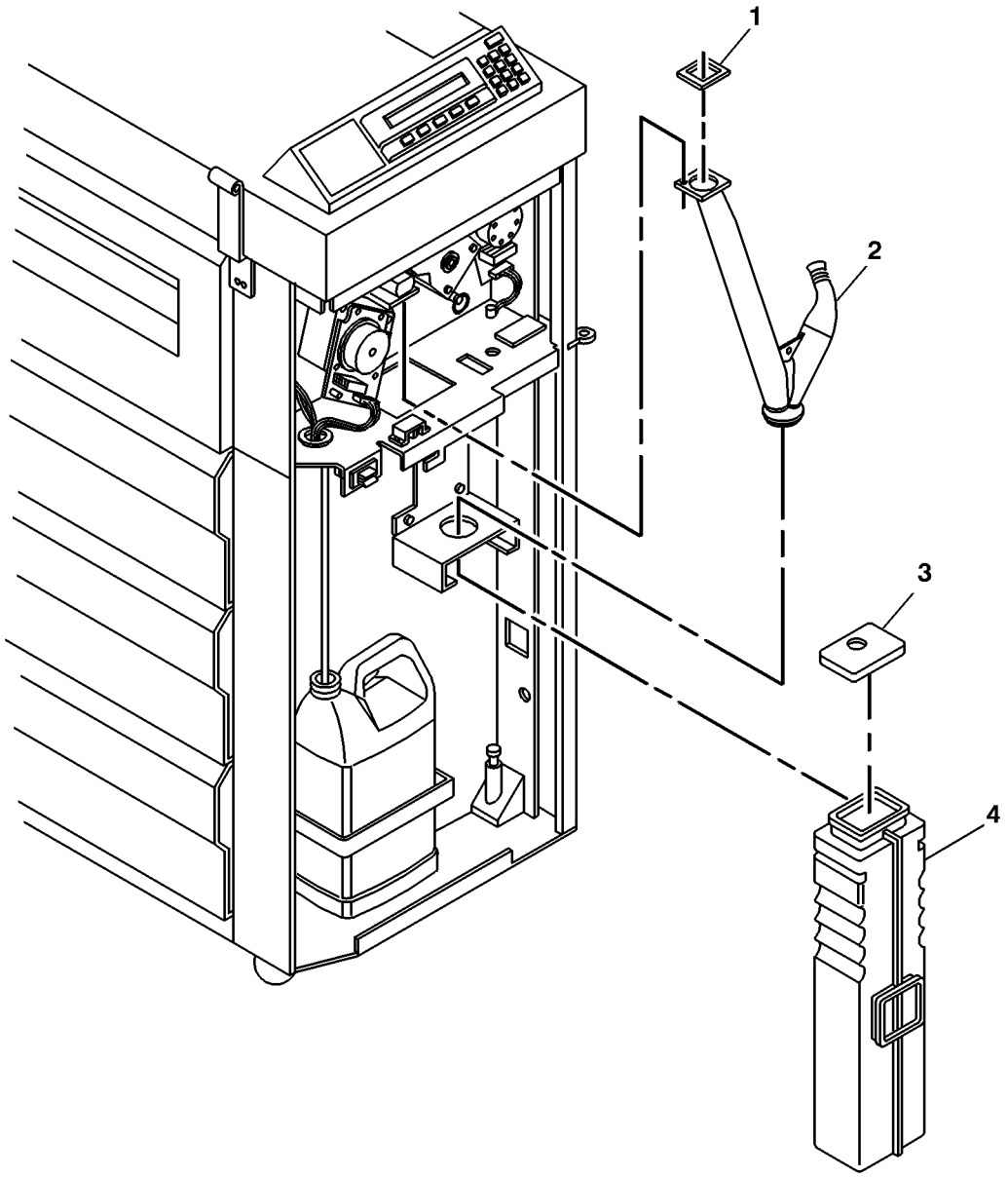


0000038A-RNO

# PL 9.6 Web Oiler Assembly

| Item | Part | Description |
|---|---|---|
| 1 | – | Part of Xerographic Module Assembly (REF: PL 9.1 Item 4) |
| 2 | 094K03301 | Web Oiler Assembly (REP 10.7) |
| 3 | 127K21990 | Web Oiler Motor |
| 4 | 007K08920 | Oiler Drive Gear |
| 5 | 007K08930 | Idler Gear (40t/18T) |
| 6 | – | Xerographic Frame (P/O PL 9.6 Item 1) |
| 7 | 003E39010 | Handle |
| 8 | 003E44550 | Screw (M4) |
| 9 | 029E24860 | Fastener |
| 10 | 027E03950 | Clip |

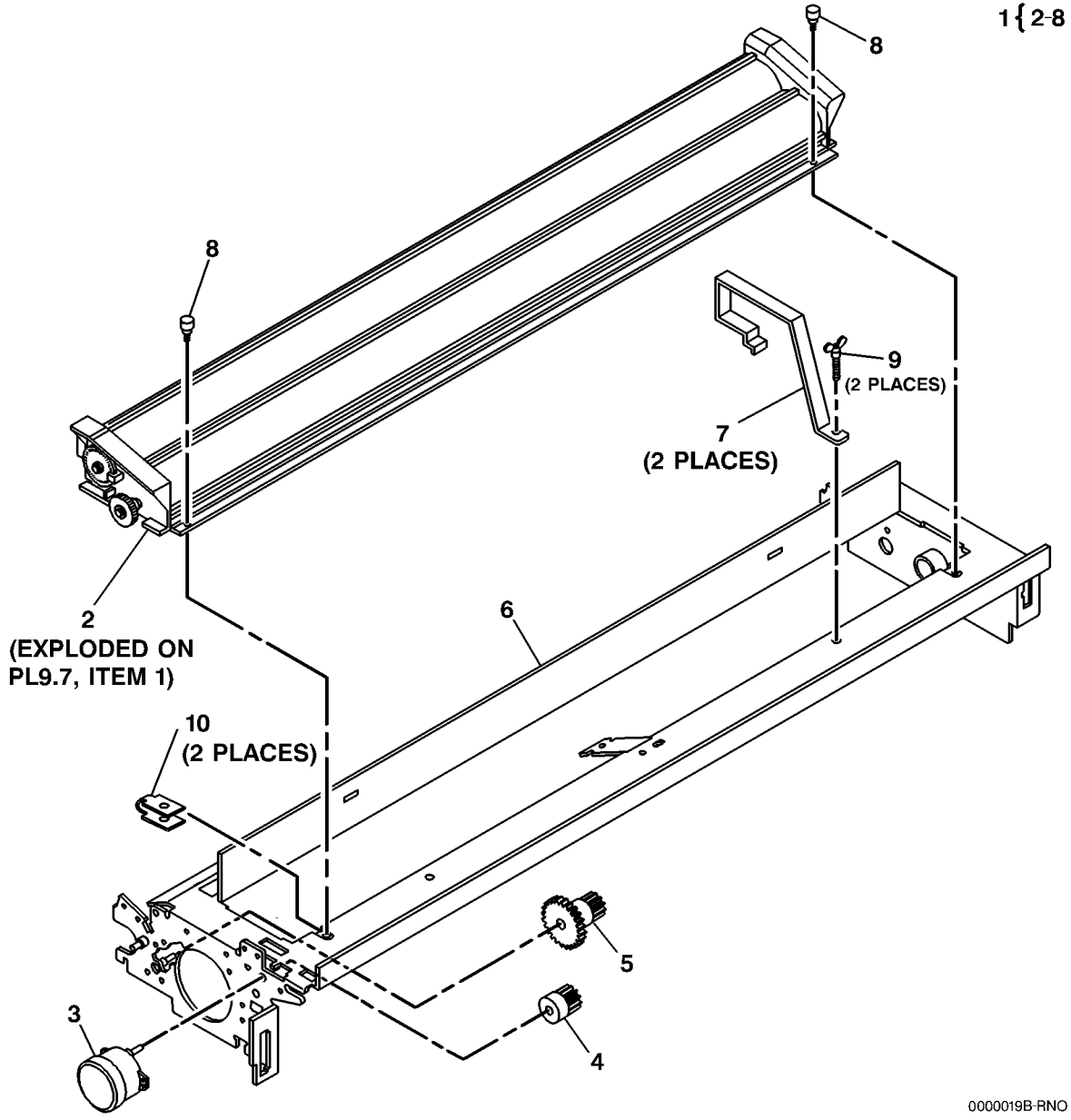

# PL 9.7 Web Oiler Components

| Item | Part | Description |
|---|---|---|
| 1 | – | Part of Web Oiler Assembly (REF: PL 9.6 Item 2) |
| 2 | 022K49131 | Web Oiler (REP 10.9) |
| 3 | 022K49380 | Pinch Roll |
| 4 | – | Take Up Shaft (P/O PL 9.7 Item 1) |
| 5 | 009E75260 | Spring |
| 6 | 007E42580 | Take Up Gear |
| 7 | – | Web Frame (P/O PL 9.7 Item 1) |
| 8 | 130K55130 | Web Motion Sensor |
| 9 | 146K00461 | Encoder Wheel |
| 10 | 005E11130 | Brake |

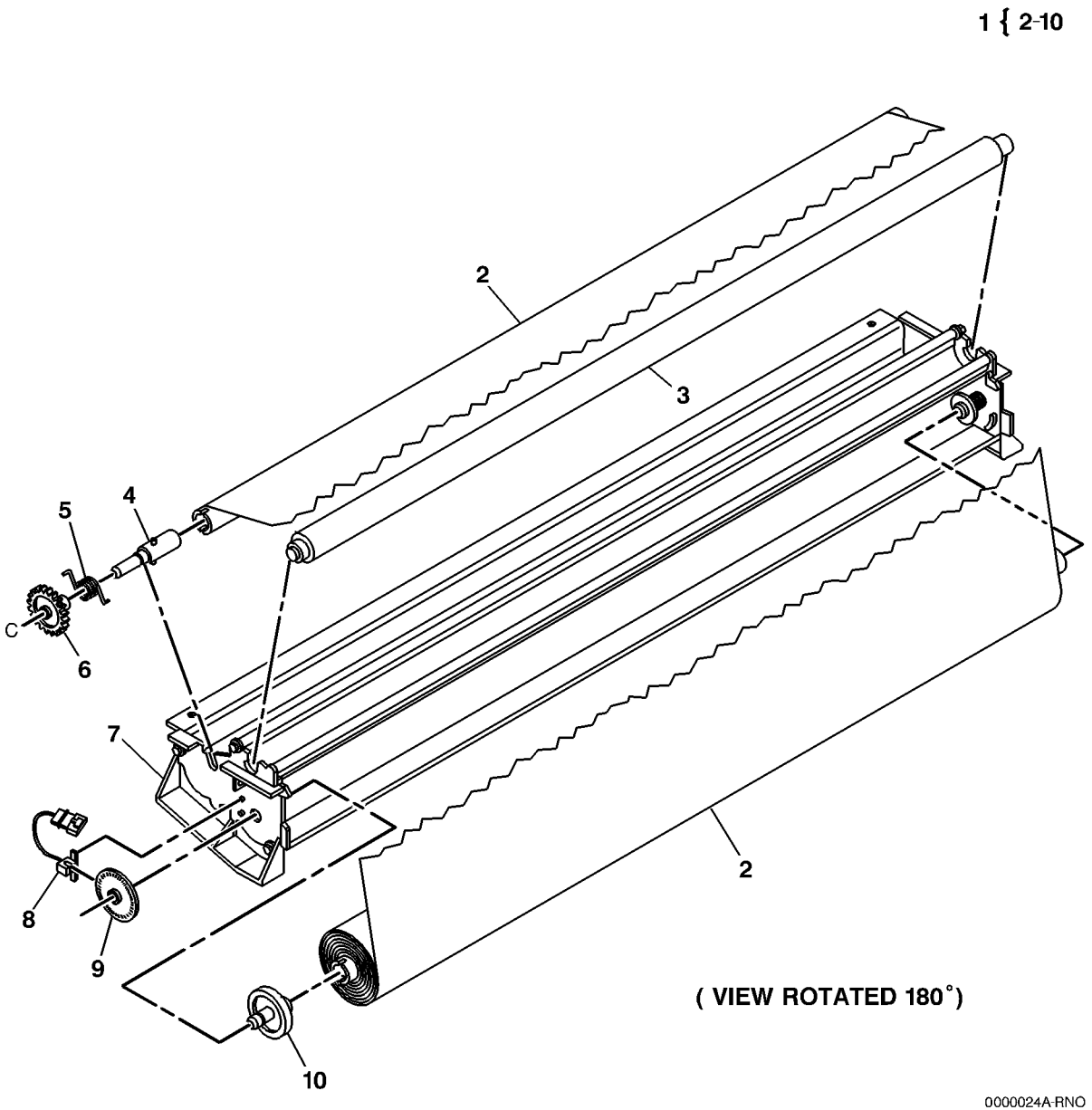

## PL 9.8 Developer Module Assembly

| Item | Part | Description |
|---|---|---|
| 1 | 127E10341 | Drum/Developer Drive Motor |
| 2 | 035K05900 | Gasket |
| 3 | 010E04190 | Trickle Slide |
| 4 | 014K04740 | Developer Support (Drive Side) |
| 5 | 014K04730 | Developer Support |
| 6 | 028E07771 | Retainer |
| 7 | 009E41251 | Coupling Spring |
| 8 | 007E15351 | Drive Gear/Coupling |
| 9 | 030K56160 | Developer Support (Drive Side) |
| 10 | 050E12851 | Developer Baffle |
| 11 | 030K56150 | Developer Support |
| 12 | 121K10422 | Developer Module Assembly (REP 9.5) |
| 13 | 019E21480 | Clip |
| 14 | 604K00520 | Roller Kit (2/Kit) (W/TAG 52) |

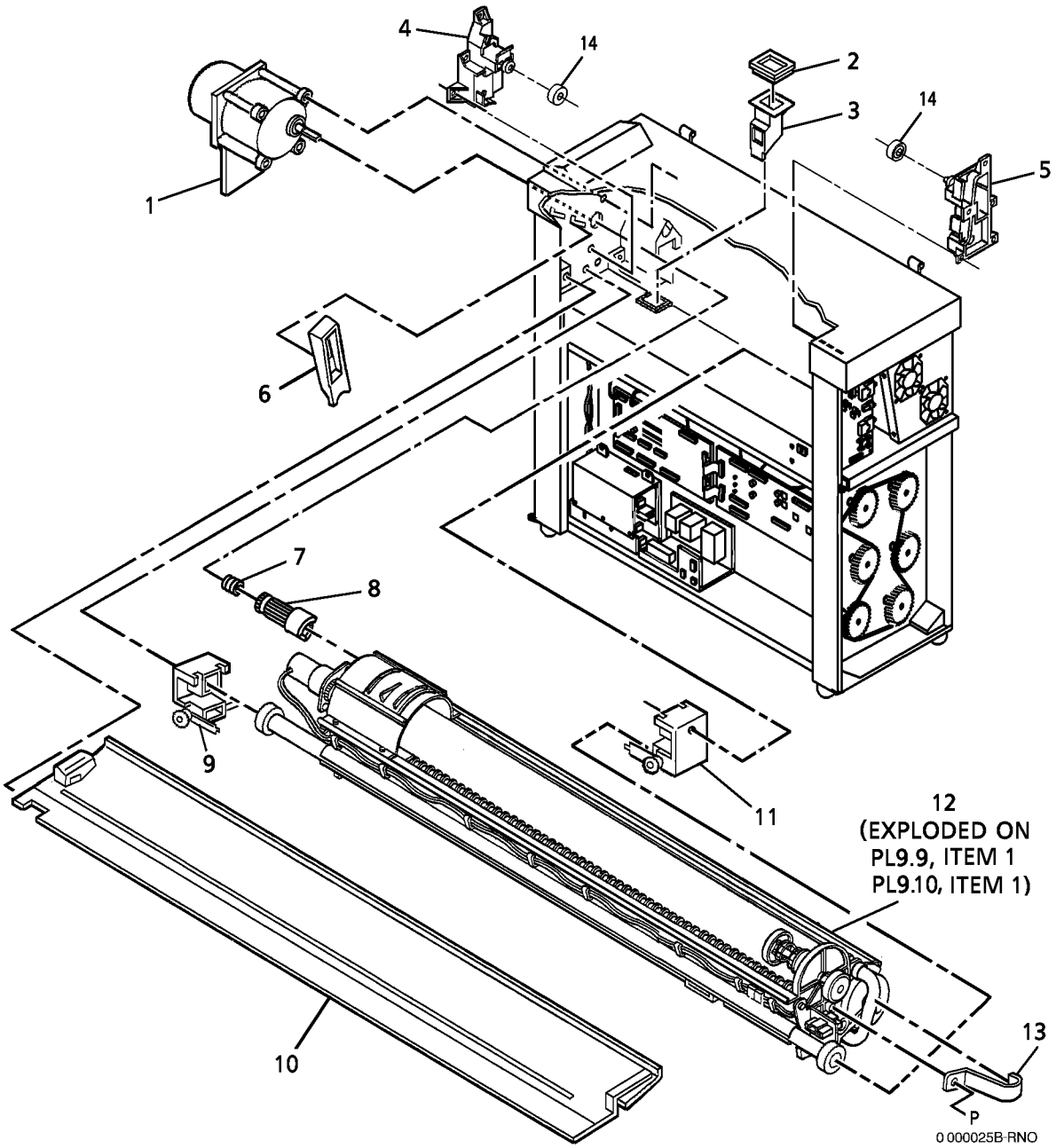

# PL 9.9 Developer Module Components (Part 1 of 2)

| Item | Part | Description |
|---|---|---|
| 1 | – | Part of Developer Module Assembly (REF: PL 9.8 Item 12) |
| 2 | 054E03181 | Pressure Equilizer Tube (REP 9.8) |
| 3 | 003E19330 | Cartridge Knob |
| 4 | – | Spring (P/O PL 9.9 Item 1) |
| 5 | 005K01351 | Cartridge Hub |
| 6 | – | Cartridge Drive Plate (P/O PL 9.9 Item 1) (REP 9.14) |
| 7 | 130K30381 | Toner Cartridge Home Sensor (REP 9.12,ADJ 9.5) |
| 8 | 002E40470 | Top Shield Door |
| 9 | 055K13840 | Top Shield |
| 10 | – | Developer Frame (P/O PL 9.9 Item 1) |
| 11 | 130K53300 | Toner Sensor (REP 9.11) |
| 12 | 019E15551 | Bias Clip |
| 13 | 001E23080 | Toner Strip |
| 14 | 055K13830 | Sump Shield (REP 9.13) |
| 15 | – | Sensor Spacer (P/O PL 9.9 Item 1) |
| 16 | 035E12210 | Seal |
| 17 | – | Foam Gasket (P/O PL 9.9 Item 19) |
| 18 | – | Foam Gasket (P/O PL 9.9 Item 19) |
| 19 | 604K00080 | Seal Repair Kit (W/TAG 51) |

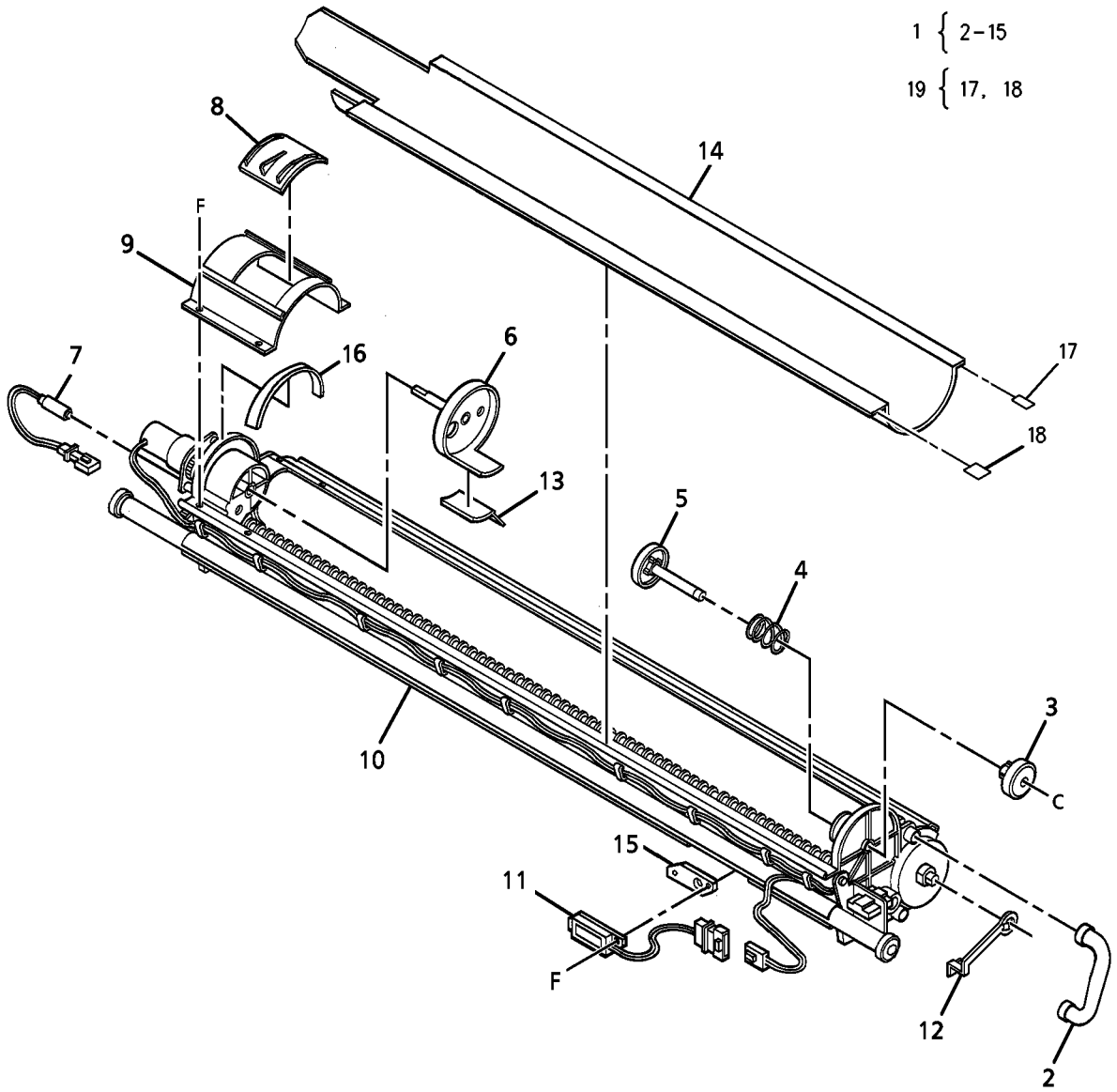


0 000026B-RNO

# PL 9.10 Developer Module Components (Part 2 of 2)

| Item | Part | Description |
|---|---|---|
| 1 | – | Part of Developer Module Assembly (REF: PL 9.8 Item 12) |
| 2 | 007E16330 | Cartridge Gear (44T) |
| 3 | 007E16341 | Cartridge Drive Gear (26T) |
| 4 | – | Motor Mounting Plate (P/O PL 9.10 Item 1) |
| 5 | 127K22600 | Cartridge Drive Motor (MOT4) (REP 9.6) |
| 6 | 120E04750 | Cable Clip |
| 7 | 007E14690 | Auger Drive Gear (37T) |
| 8 | 007K05260 | Developer Drive Gear (43T/25T) |
| 9 | 007E14700 | Auger Drive Gear (37T) |
| 10 | 007E14710 | Magnetic Roll Drive Gear (40T) |
| 11 | 054E03491 | Pressure Equilizer Tube (REP 9.18) |
| 12 | – | Developer Frame (P/O PL 9.10 Item 1) |
| 13 | 035K04581 | Seal |
| 14 | 600K58720 | DRS Roller Kit |
| 15 | – | Roller (P/O PL 9.10 Item 14) |

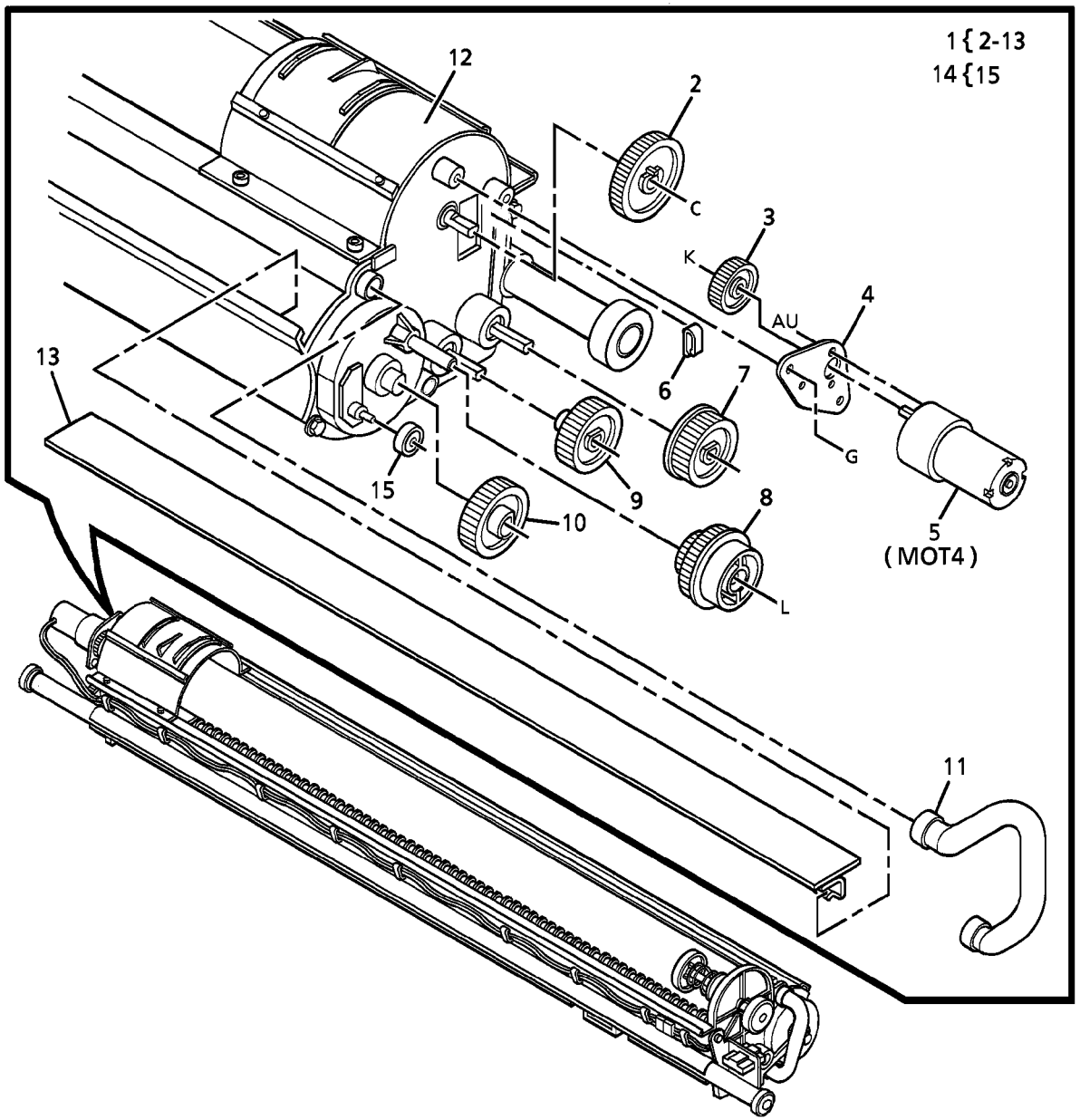

# PL 10.1 Xerographic Module Assembly

| Item | Part | Description |
|---|---|---|
| 1 | 126K05992 | Xerographic Module Assembly (60 Hz) (REP 9.1) |
| – | 126K07152 | Xerographic Module Assembly (50 Hz) (REP 9.1) |
| 2 | 127E10331 | Fuser Drive Motor |
| 3 | 007E44391 | Drive Pulley (28T) |

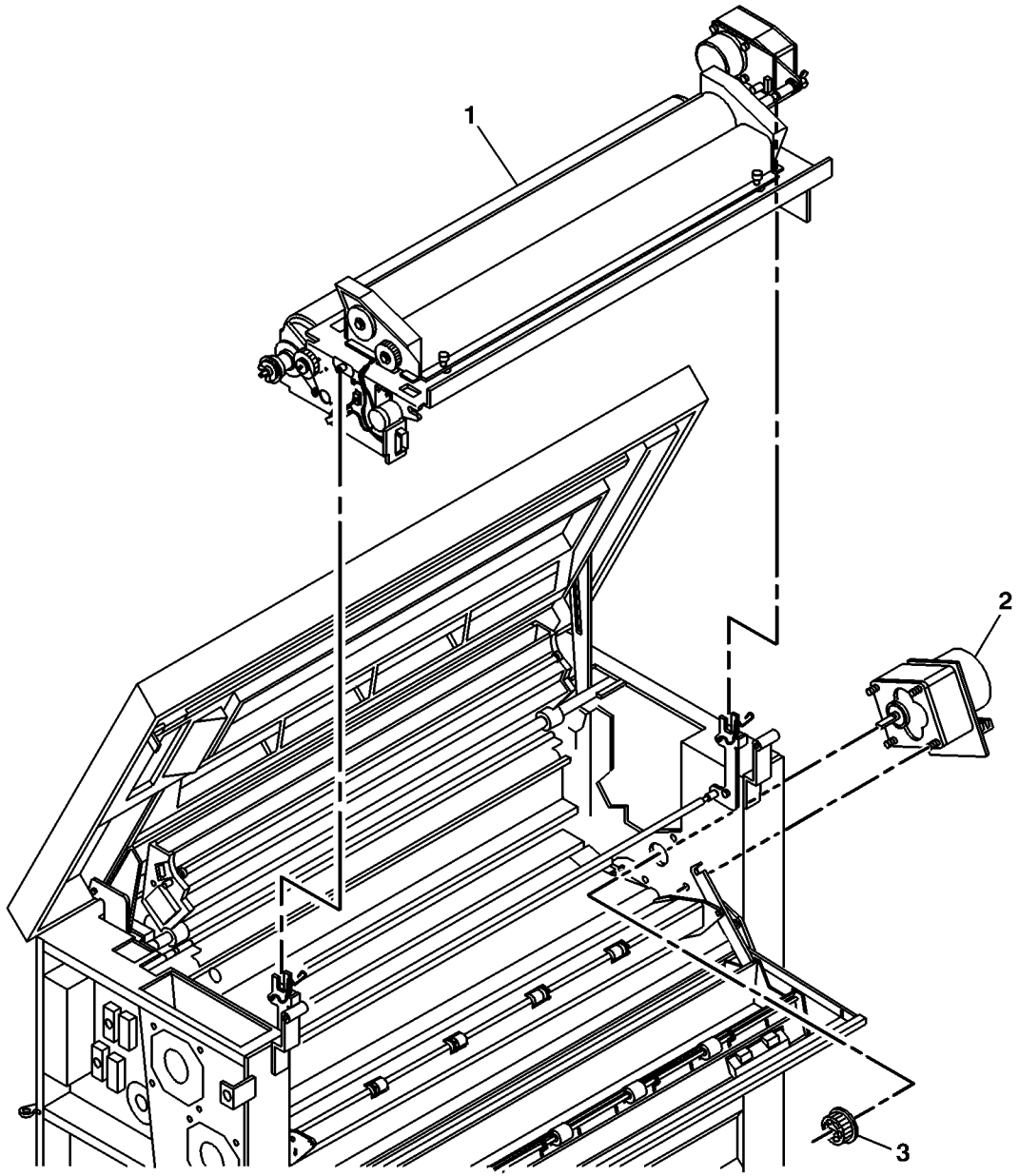


0000028A-RNO

# PL 10.2 Fuser Components

| Item | Part | Description |
|---|---|---|
| 1 | – | Part of Xerographic Module Assembly (REF: PL 10.1 Item 1) |
| 2 | – | Xerographic Frame (P/O PL 10.2 Item 1) |
| 3 | 005K03430 | Fuser Hub |
| 4 | – | LH Lamp Bracket (P/O PL 10.2 Item 1) |
| 5 | 005K02613 | LH Fuser Bearing |
| 6 | 062E05461 | Reflector |
| 7 | 022K40050 | Fuser Heat Roll (REP 10.2) |
| 8 | 126E00492 | Fuser Heat Rod (60 Hz) (REP 10.1) |
| – | 126E00821 | Fuser Heat Rod (50 Hz) (REP 10.1) |
| 9 | – | RH Fuser Bearing (P/O PL 10.2 Item 16) |
| 10 | 007E42570 | Exit Drive Gear |
| 11 | 115E02231 | Ground Ring |
| 12 | 006E23471 | Fuser Drive Shaft |
| 13 | 007E42780 | Fuser Gear (80t) |
| 14 | 016E08080 | Grommet |
| 15 | 049E06460 | RH Lamp Bracket |
| 16 | 600K45270 | Fuser Drive Shaft Kit |
| 17 | 120E05440 | Clip |
| 18 | 120E06510 | Twist Tie Clamp |
| 19 | 121E01402 | Magnet |

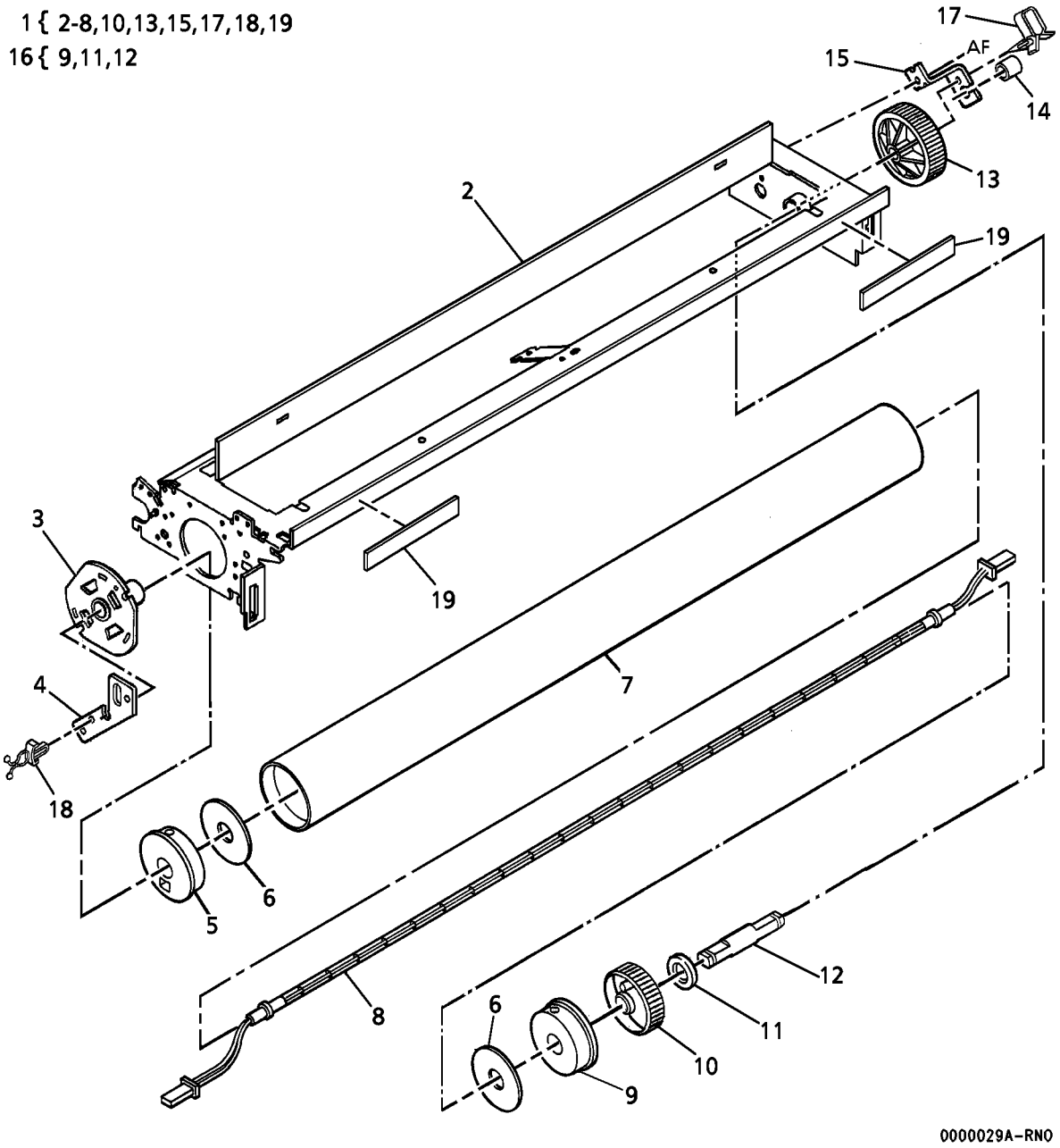

# PL 10.3 Fuser Pressure Components And Moisture Collection

| Item | Part | Description |
|---|---|---|
| 1 | – | Part of Media Transport Assembly (REF: PL 8.1 Item 4) |
| 2 | 023K00942 | Fabric Guide (REP 8.9) |
| 3 | 003K09130 | Fabric Guide Retainer Handle |
| 4 | – | Transport Frame (P/O PL 10.3 Item 1) |
| 5 | 009E32490 | Spring |
| 6 | – | Housing Assembly (P/O PL 10.3 Item 1) |
| 7 | – | End Cap (P/O PL 10.3 Item 6) |
| 8 | – | Gasket (P/O PL 10.3 Item 6) |
| 9 | – | Housing (P/O PL 10.3 Item 6) |
| 10 | – | Adapter (P/O PL 10.3 Item 6) |
| 11 | 033K02430 | Pressure Plate A (REP 8.5) |
| 12 | 033K02040 | Pressure Plate B (REP 8.5) |
| 13 | 009E46870 | Drain Tube Spring |
| 14 | 052E07900 | Moisture Drain Tube |
| 15 | 420W10201 | Cable Tie |

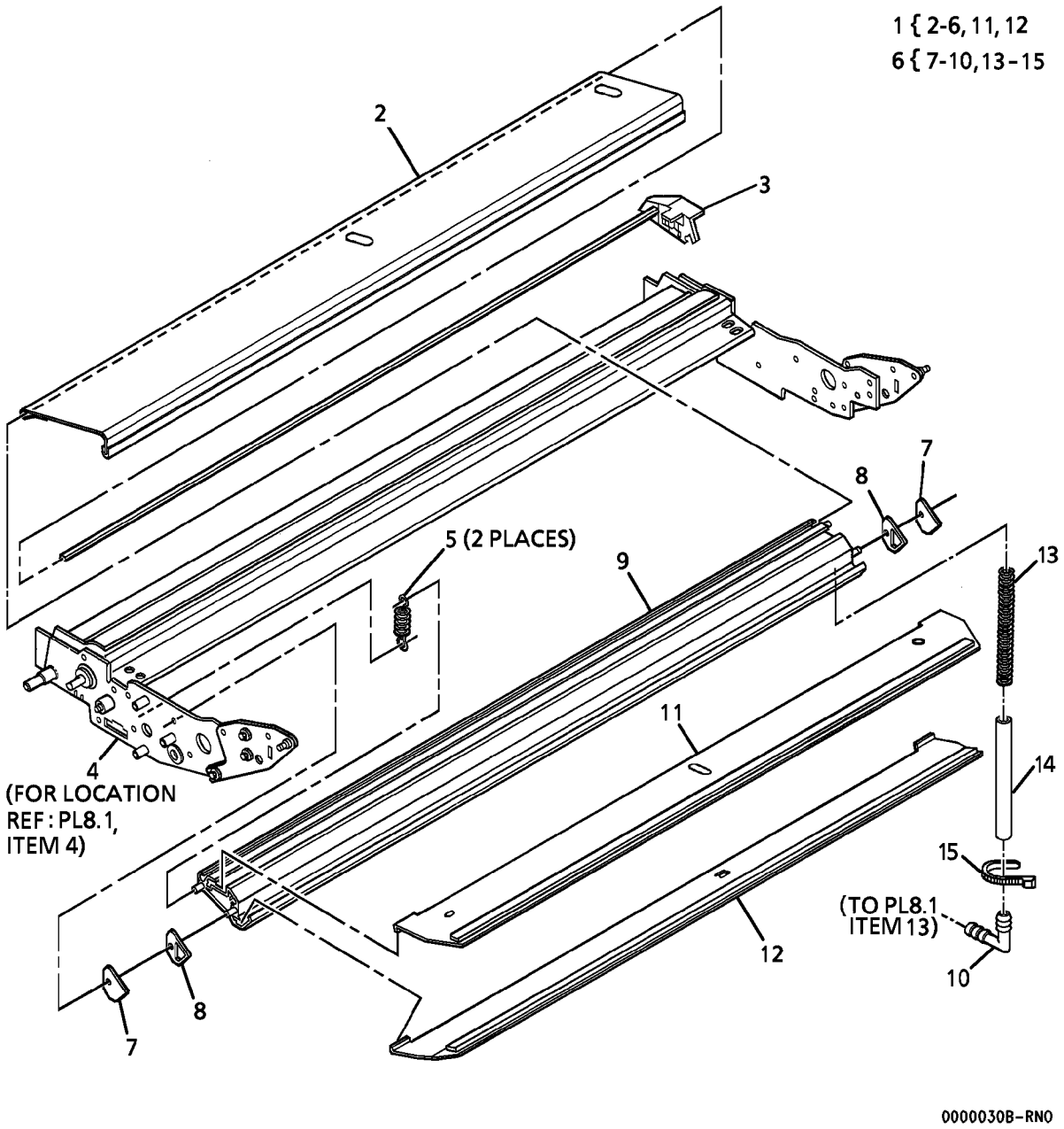

# PL 10.4 Fuser Heat Control And Stripper Fingers

| Item | Part | Description |
|---|---|---|
| 1 | – | Part of Xerographic Module Assembly (REF: PL 10.1 Item 1) |
| 2 | – | Xerographic Frame (P/O PL 10.4 Item 1) |
| 3 | 130K54730 | Thermistor |
| 4 | 110E05500 | Stripper Finger Jam Switch (S1) |
| 5 | 130K54841 | Thermal Fuse |
| 6 | 600K68100 | Special Stripper Finger Kit (FX Series Media Only) |
| – | 030K55720 | Stripper Bracket Assembly |
| 7 | – | Stripper Finger Support (P/O PL 10.4 Item 6) |
| 8 | 009E61600 | Spring |
| 9 | 600K35880 | Stripper Finger Spare Kit |
| 9A | – | Stripper Finger (REP 10.8) |
| 10 | 009E38060 | Spring |
| 11 | 068E38113 | Stripper Finger Bracket |
| 12 | 038K11070 | Paper Guide |

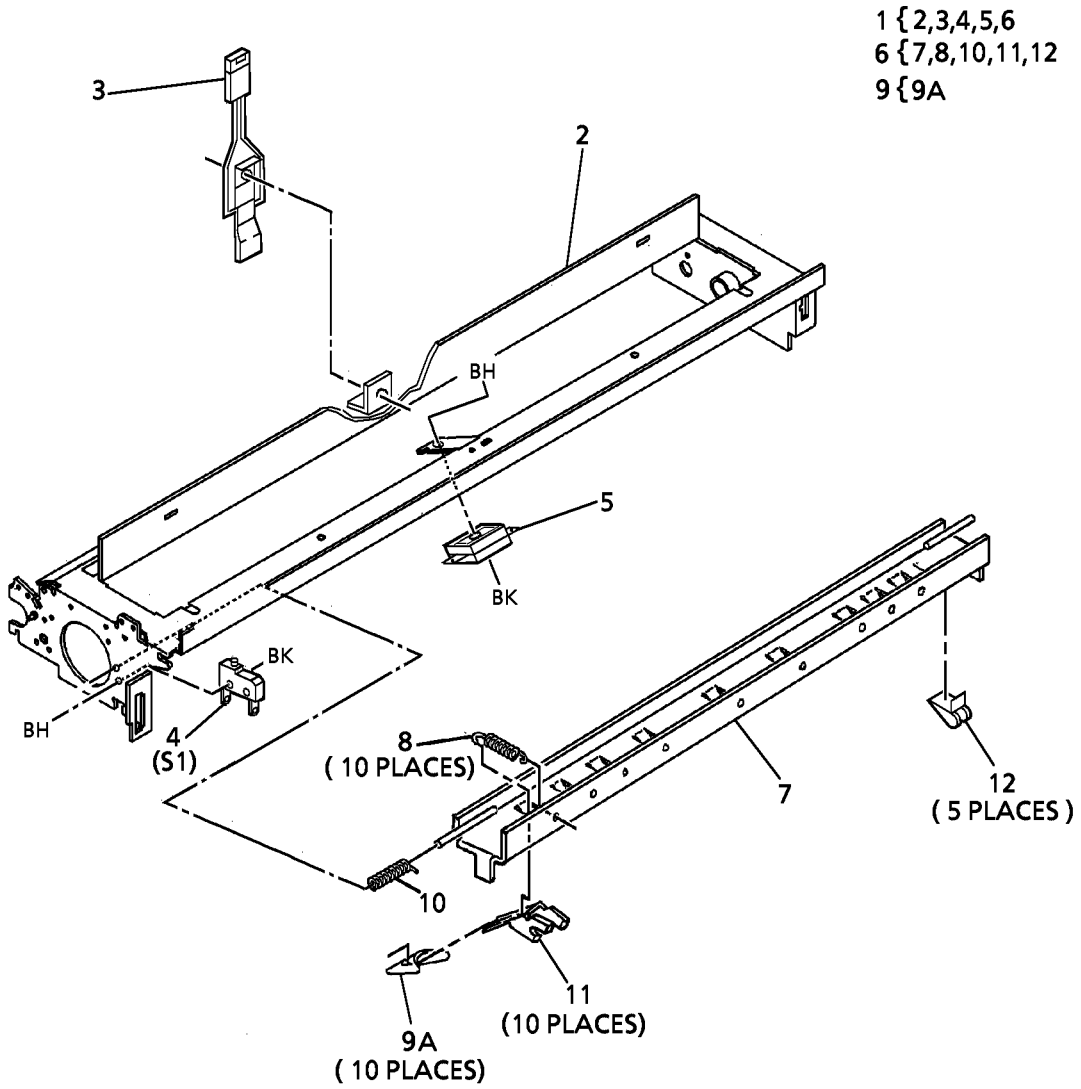

# PL 14.1 Transport Latching Cover And Rear Door

| Item | Part | Description |
|---|---|---|
| 1 | 130E02271 | Feed Shelf Interlock Switch (S29) |
| 2 | 014E20541 | Left Hinge Spacer |
| 3 | 048K47700 | Rear Door |
| 4 | 017K01120 | Caster |
| 5 | – | Bracket (Not Spared) |
| 6 | 030K55634 | Transport Latching Cover Assembly (8830) (W/TAG 32), Transport Latching Cover Assembly (8825) (W/TAG 90) |
| – | 030K64020 | Transport Latching Cover Assembly (8825) (W/O TAG 90) |
| 7 | 121E07680 | Magnet |
| 8 | 019E33441 | Ground Retainer |
| 9 | 115E01410 | Static Brush |
| 10 | – | Transport Latching Cover (P/O PL 14.1 Item 6) |
| 11 | 096E72590 | Label |
| – | 096E72591 | Label |
| 12 | 809E02290 | Shaft Spring |
| 13 | 600K59260 | Exit Idler Roll Kit |
| 14 | – | Shaft (P/O PL 14.1 Item 13) |
| 15 | – | Roll (P/O PL 14.1 Item 13) |
| 16 | 035E41160 | Gasket |
| 17 | 029E28060 | Fastener |
| 18 | 110K09430 | Switch |
| 19 | – | Label (P/O PL 14.1 Item 6) |

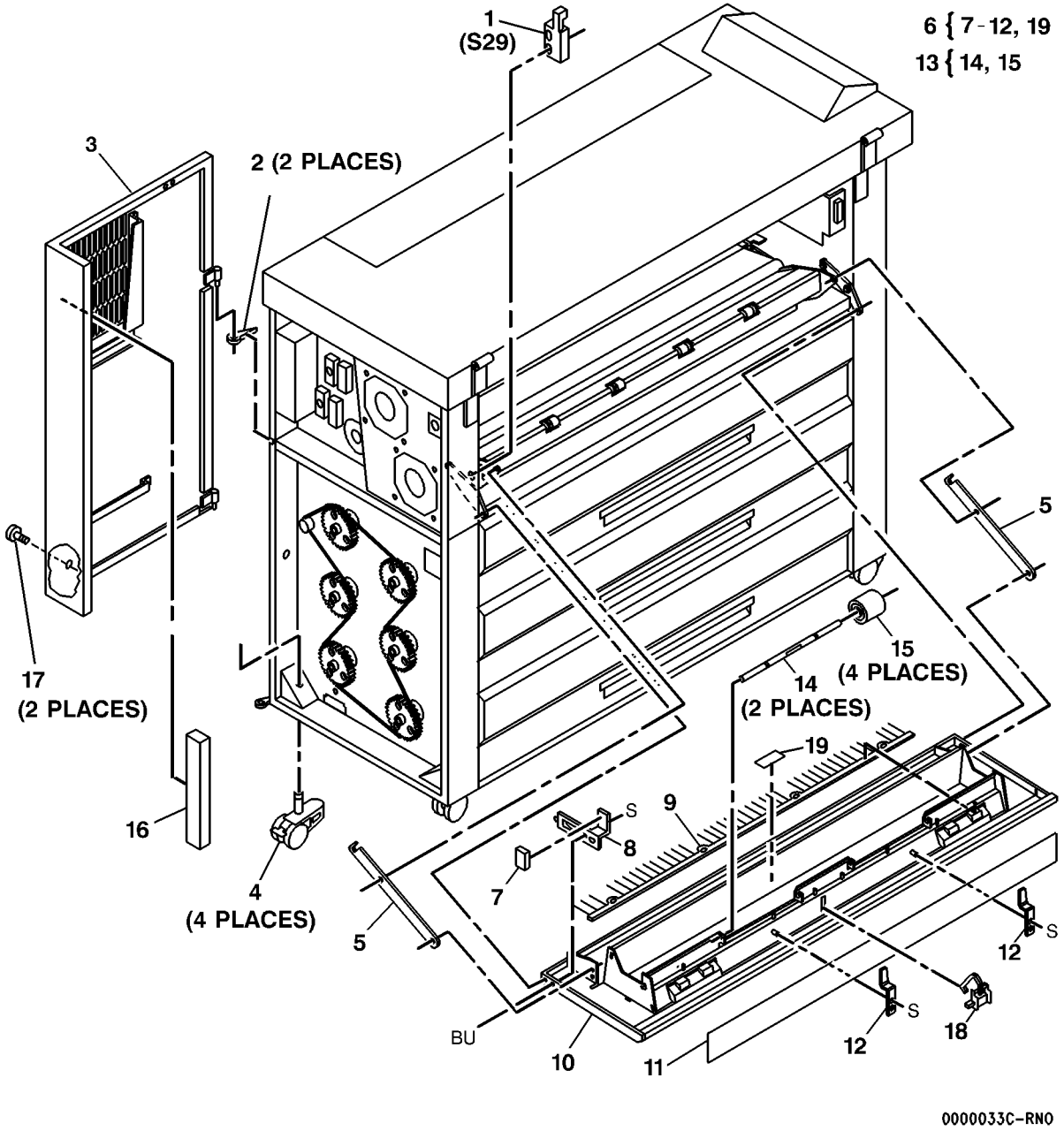

# PL 14.2 Front Door And Right Side Covers

| Item | Part | Description |
|---|---|---|
| 1 | 048K14304 | Front Door Cover Assembly (W/ TAG 32) |
| 2 | 891E09080 | Logo Plate |
| 3 | 003E13010 | Keeper |
| 4 | 048K47710 | Right Side, Left Cover |
| 5 | 014E20551 | Right Hinge Spacer |
| 6 | 048K47681 | Right Side, Left Lower Cover |
| 7 | 048K47692 | Right Side, Right Lower Cover |
| 8 | 048K44401 | Right Side, Right Cover |
| 9 | 003E13020 | Front Door Latch |
| 10 | 110E02640 | Front Door Cover Interlock Switch |
| 11 | – | Front Door Cover (P/O PL 14.2 Item 1) |
| 12 | 121E10610 | Magnet |

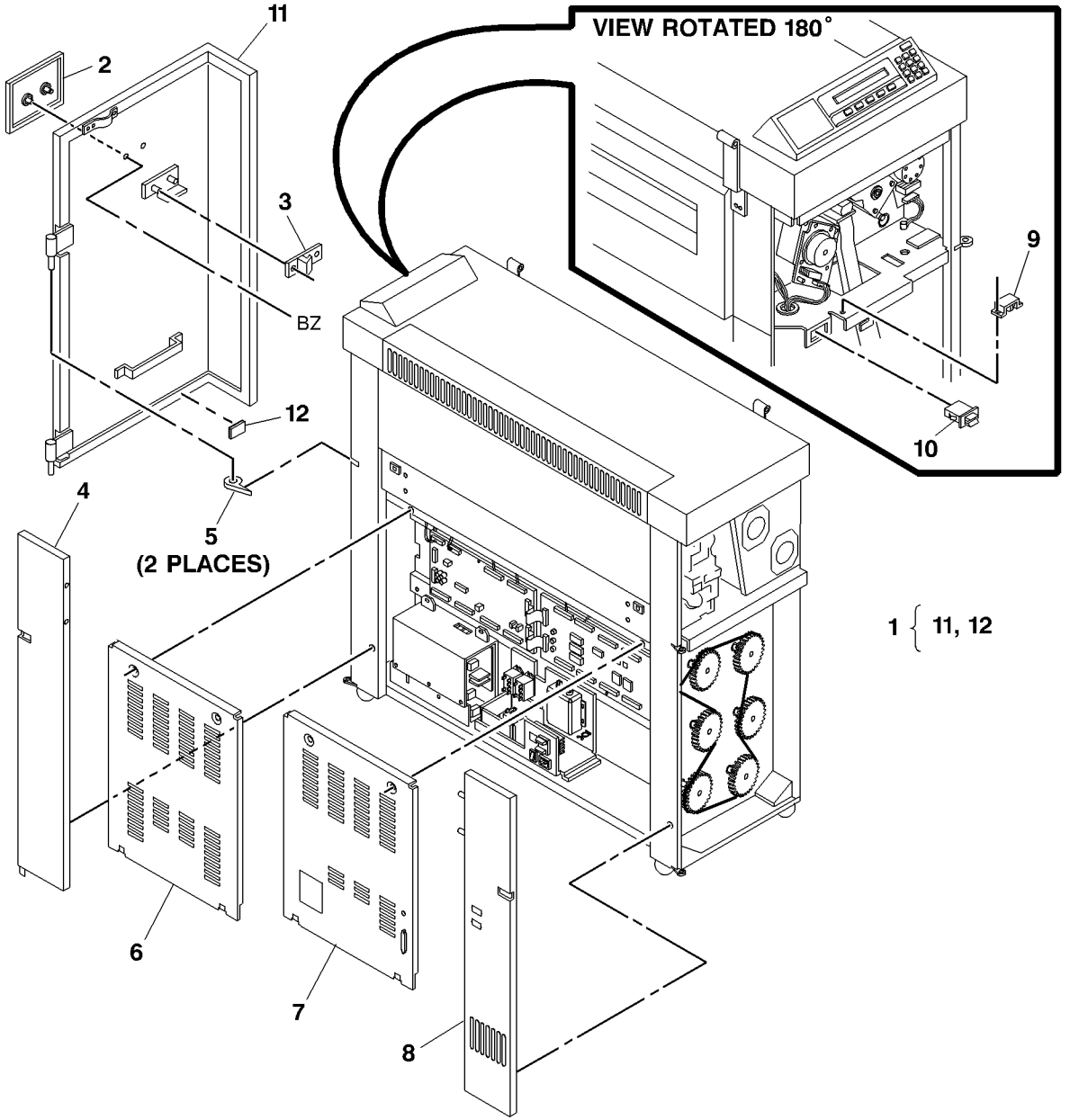

# PL 14.3 Developer Cover And Catch Tray

| Item | Part | Description |
|---|---|---|
| 1 | 073E11800 | Catch Tray Kit |
| 2 | 073E11710 | Tray Support Kit |
| 3 | 048E51410 | Rear Developer Cover (W/TAG 6) |
| 4 | 110K08970 | Interlock Switch |

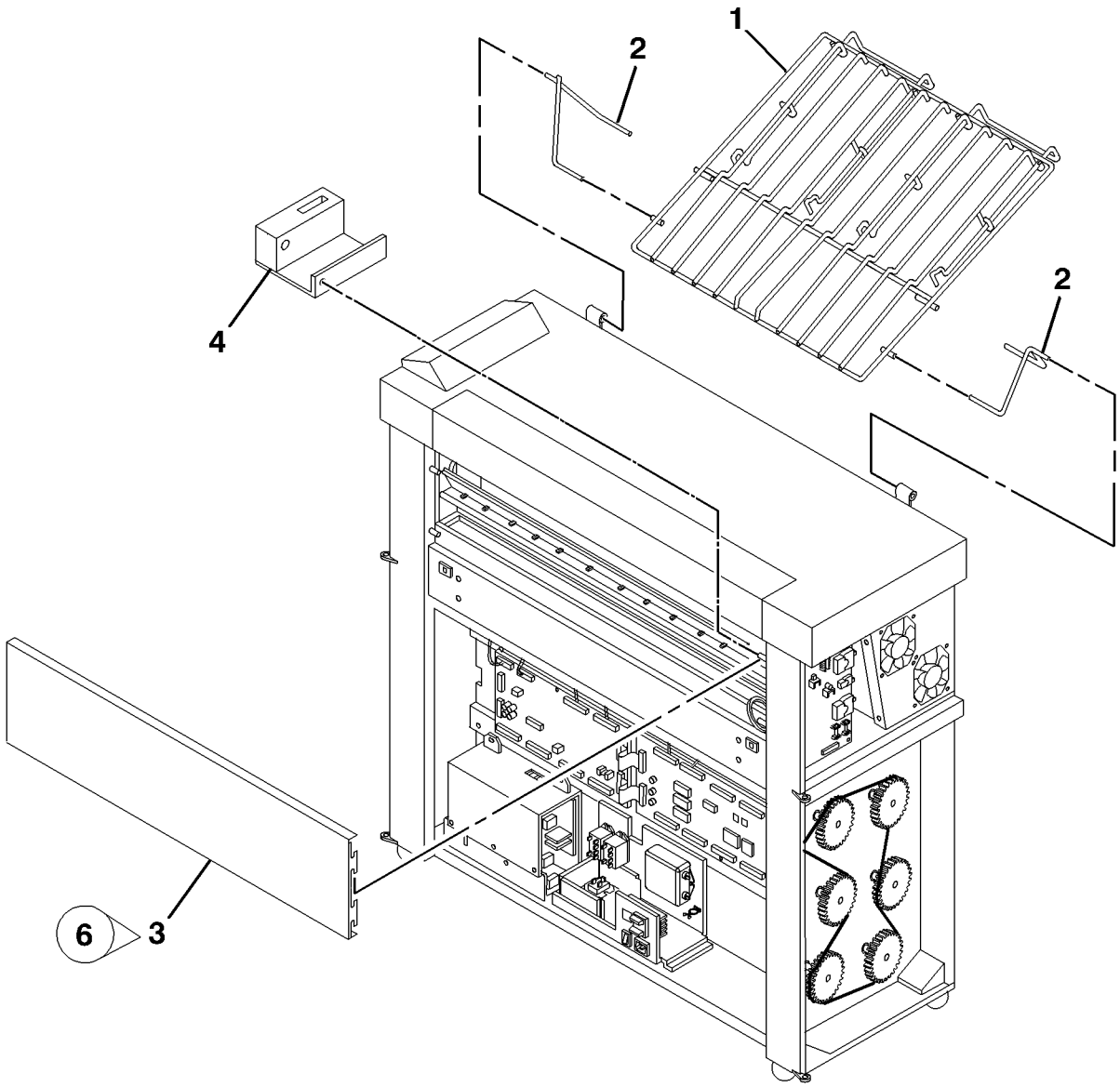


0 000035C RNO

# PL 14.4 Top Cover And Catch Tray Brackets

| Item | Part | Description |
|---|---|---|
| 1 | 048K45054 | Top Cover (W/TAG 32) |
| 2 | 055E38100 | Shielding Pad |
| 3 | 029E23670 | Pin |
| 4 | 035E37240 | Gasket |
| 5 | 035E41150 | Gasket |
| 6 | 030K57191 | RH Service Bracket |
| 7 | 030K57890 | RH Catch Tray Bracket |
| 8 | 030K57181 | LH Service Bracket |
| 9 | 030K57900 | LH Catch Tray Bracket |
| 10 | 008E06000 | Cam Bracket |

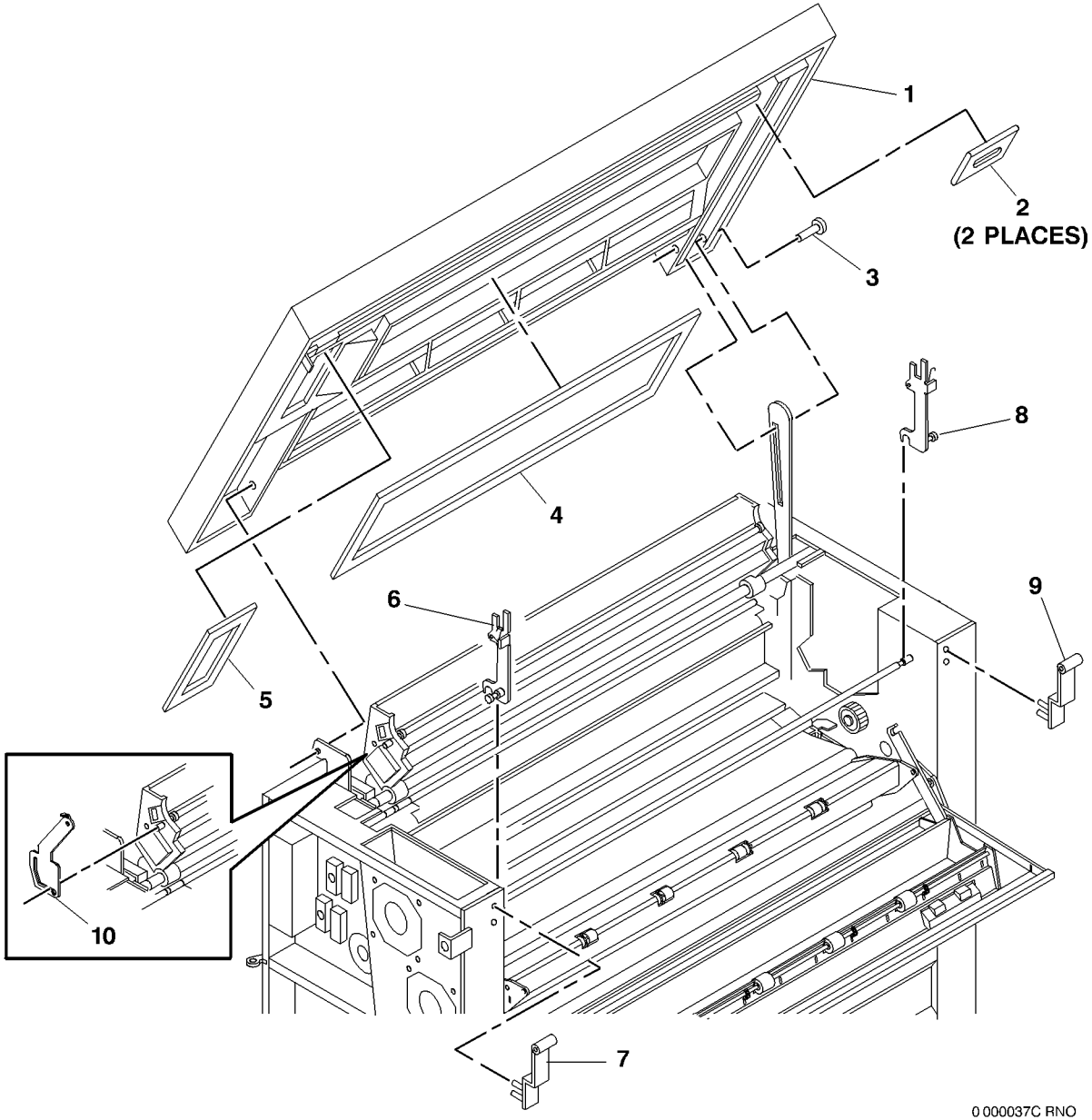

# PL 14.5 Left Side Covers (8825 Only)

| Item | Part | Description |
|---|---|---|
| 1 | 048K79480 | Left Middle Cover, Left Lower Cover |
| 2 | 048E39380 | Kickplate |

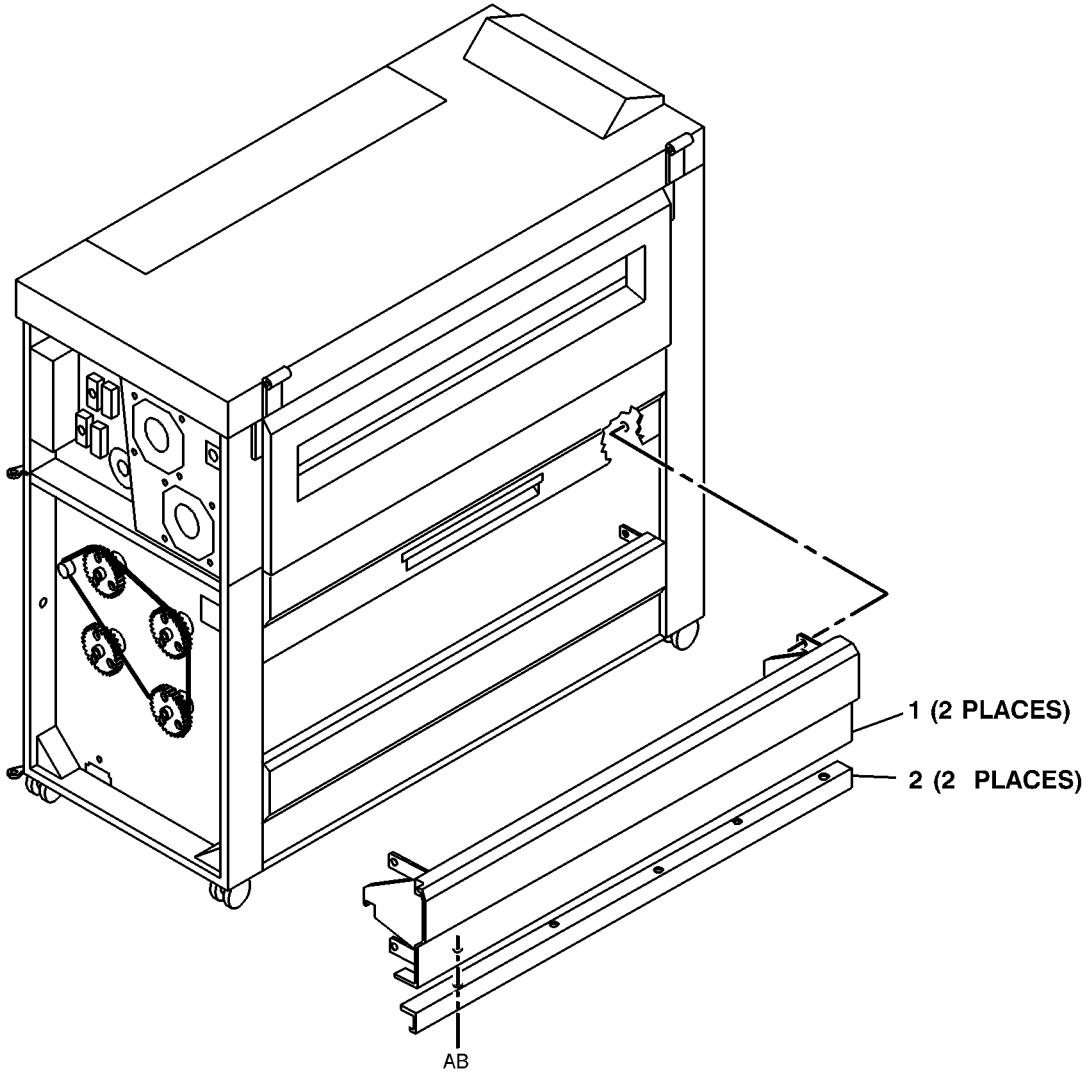

# PL 15.1 Miscellaneous Electrical Connectors And Fasteners

| Item | Part | Description |
|---|---|---|
| 1 | – | Contact Socket (20-26 AWG) (To be Available at Later Date) |
| 2 | – | Contact Pin (20-26 AWG) (To be Available at Later Date) |
| 3 | – | Wire And Connector Repair Kit (To be Available at Later Date) |
| 4 | – | Pin Wire (P/O PL 15.1 Item 3) (10/Kit) |
| 5 | – | Connector (P/O PL 15.1 Item 3) (20/Kit) |
| 6 | – | Socket Wire (P/O PL 15.1 Item 3) (10/Kit) |

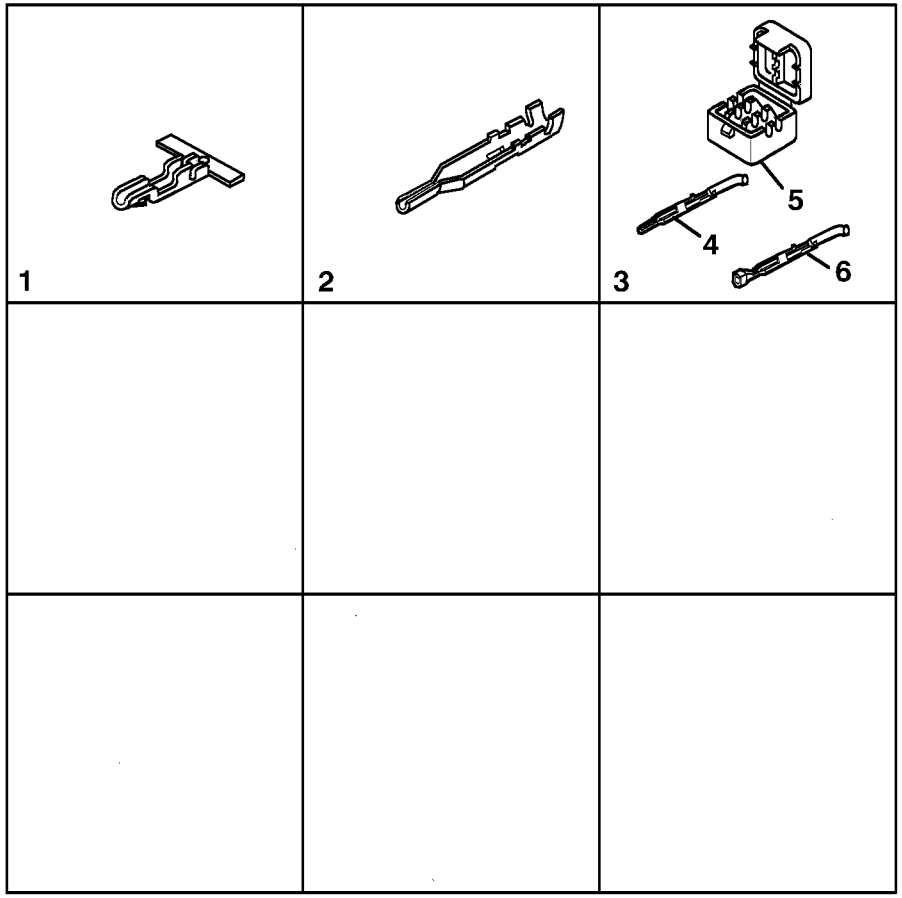


0000036B-RNO

## Common Hardware

| Item | Part | Description |
|---|---|---|
| A | 112W11655 | Hex Screw (6 X 16) |
| B | 112W07455 | Screw |
| C | 354W21052 | Retaining Ring (7-9mm) |
| D | 354W21252 | Retaining Ring (9-12mm) |
| E | 153W23352 | Screw |
| F | 132W00253 | Screw |
| G | 156W27555 | Screw |
| H | 156W27655 | Screw (4.2 X 16) |
| J | 251W10856 | Plain Washer |
| K | 354W20852 | Retaining Ring (5-7mm) |
| – | 354W24251 | Alternate |
| L | 356W02502 | Retaining Ring |
| M | 251W10455 | Washer (M4) |
| N | 256W20454 | Lockwasher (M4) |
| P | 112W27255 | Screw |
| R | 351W12551 | Retaining Ring (M25) |
| S | 220W00450 | Nut (M4) |
| T | 251W10655 | Washer (M6) |
| U | 351W10651 | Retaining Ring (M6) |
| V | 121W30455 | Set Screw |
| W | 351W11551 | Retaining Ring (M15) |
| X | 112W27355 | Screw |
| Y | 286W03954 | Sprial Pin (3 X 22) |
| Z | 259W30351 | Lockwasher (M4) |
| AA | 131W37153 | Screw |
| AB | 153W27452 | Screw (4.2 X 9.5) |
| AC | 131W37553 | Screw |
| AD | 131W37853 | Screw |
| AE | 131W40253 | Screw |
| AF | 153W17552 | Screw |
| AG | 112W07255 | Screw |
| AH | 156W27455 | Screw (4.2 X 9.5) |
| AJ | 156W23355 | Screw |
| AK | 286W02354 | Spring Pin (2-19mm) |
| AL | 113W06455 | Screw |
| AM | 251W10355 | Washer (M3) |
| AN | 113W50555 | Screw |
| AP | 256W20554 | Lockwasher (M5) |
| AR | 236W00651 | Speed Nut |
| AS | 354W21152 | Retaining Ring (8-11mm) |
| AT | 112W27655 | Screw |
| AU | 113W06355 | Screw |
| AV | 220W00650 | Nut (M6) |
| AW | 112W27455 | Screw |
| AX | 153W23452 | Screw |
| AY | 251W22602 | Flat Washer |
| AZ | 153W42353 | Screw |
| BA | 153W17451 | Screw |
| BB | 201W00455 | Nut |
| BC | 265W00650 | Lockwasher (M6) |
| BD | 236W00851 | Speednut |
| BE | 265W00850 | Lockwasher (M8) |
| BF | 153W27552 | Screw (4.2 X 13) |
| BG | 354W00555 | Retaining Ring (6mm) |
| BH | 113W13802 | Screw (2-56 X 1/2) |
| BJ | 354W20752 | Retaining Ring (4-5mm) |
| BK | 215W10102 | Nut (8-48) |
| BL | 113W54055 | Screw |
| BM | 153W27952 | Screw |
| BN | 153W17752 | Screw |
| BP | 141W30553 | Setscrew |
| BR | 131W20853 | Screw |
| BS | 102W10355 | Flathead Screw |
| BT | 158W17452 | Screw |
| BU | 113W10355 | Screw |
| BV | 354W20652 | Retaining Ring (3-4mm) |
| BW | 158W21752 | Screw |
| BX | 132W03653 | Capscrew |
| BY | 320W34301 | Rivet |
| BZ | 236W00251 | Speednut |
| CA | 112W05255 | Screw |

# Part Number Index

Table 1 Part Number Index

| Part Number | Part List |
|---|---|
| 001R00535 | PL 9.2 |
| 001E23080 | PL 9.9 |
| 002K35642 | PL 10.3 |
| 002E40470 | PL 9.9 |
| 002K55230 | PL 10.3 |
| 003K07581 | PL 7.5 |
| 003K09130 | PL 10.3 |
| 003E13010 | PL 14.2 |
| 003E13020 | PL 14.2 |
| 003E16521 | PL 7.8 |
| 003E17220 | PL 7.5 |
| 003E17580 | PL 7.3 |
| 003E17610 | PL 7.3 |
| | PL 7.4 |
| 003E17620 | PL 7.4 |
| 003E17780 | PL 7.5 |
| 003E18781 | PL 7.7 |
| 003E19330 | PL 9.9 |
| 003E39000 | PL 7.5 |
| 003E39001 | PL 7.5 |
| 003E39010 | PL 9.6 |
| 003E44550 | PL 9.6 |
| 004E00502 | PL 9.4 |
| 005K01351 | PL 9.9 |
| 005K02613 | PL 10.2 |
| 005K03430 | PL 10.2 |
| 005K04131 | PL 9.2 |
| 005K04151 | PL 9.1 |
| 005K04201 | PL 9.2 |
| 005E06810 | PL 7.2 |
| 005E11130 | PL 9.7 |
| 006K15640 | PL 9.2 |
| 006K15670 | PL 8.4 |
| 006K15682 | PL 8.3 |
| 006K15770 | PL 9.9 |
| 006K17441 | PL 8.2 |
| 006E23471 | PL 10.2 |
| 006E23540 | PL 8.3 |
| 006E42300 | PL 8.2 |

Table 1 Part Number Index

| Part Number | Part List |
|---|---|
| 007E01340 | PL 9.2 |
| 007E05221 | PL 9.5B |
| 007K05260 | PL 9.10 |
| 007K05760 | PL 7.2 |
| 007K07561 | PL 7.2 |
| 007K08920 | PL 9.6 |
| 007K08930 | PL 9.6 |
| 007E14600 | PL 7.3 |
| 007E14610 | PL 7.2 |
| 007E14650 | PL 7.3 |
| 007E14690 | PL 9.10 |
| 007E14700 | PL 9.10 |
| 007E14710 | PL 9.10 |
| 007E15351 | PL 9.8 |
| 007E16330 | PL 9.10 |
| 007E16341 | PL 9.10 |
| 007E16410 | PL 7.2 |
| 007E19071 | PL 7.2 |
| 007E42570 | PL 10.2 |
| 007E42580 | PL 9.7 |
| 007E42780 | PL 10.2 |
| 007E44391 | PL 10.1 |
| 008E06000 | PL 14.4 |
| 009E27330 | PL 7.5 |
| 009E27340 | PL 7.3 |
| | PL 7.8 |
| | PL 7.4 |
| 009E27351 | PL 7.5 |
| 009E30860 | PL 7.8 |
| 009E30870 | PL 7.8 |
| 009E32480 | PL 8.2 |
| 009E32490 | PL 10.3 |
| | PL 8.3 |
| 009E32500 | PL 8.2 |
| 009E32510 | PL 8.1 |
| 009E32790 | PL 7.5 |
| 009E38060 | PL 10.4 |
| 009E41251 | PL 9.8 |
| 009E43260 | PL 7.2 |
| 009E46870 | PL 10.3 |
| 009E61600 | PL 10.4 |

Table 1 Part Number Index

| Part Number | Part List |
|---|---|
| 009E75260 | PL 9.7 |
| 010K01351 | PL 7.1 |
| 010K01360 | PL 7.7 |
| 010E04190 | PL 9.8 |
| 011E04470 | PL 7.7 |
| 013K00380 | PL 9.2 |
| 013E00803 | PL 9.5B |
| 014K04730 | PL 9.8 |
| 014K04740 | PL 9.8 |
| 014E20541 | PL 14.1 |
| 014E20551 | PL 14.2 |
| 015K10310 | PL 8.1 |
| 015E17790 | PL 9.10 |
| 016E06020 | PL 8.2 |
| | PL 8.3 |
| 016E08080 | PL 10.2 |
| 016E08180 | PL 10.3 |
| 016E08931 | PL 8.2 |
| 017K01120 | PL 14.1 |
| 017E04250 | PL 7.5 |
| 017E07221 | PL 8.1 |
| 019E07100 | PL 8.4 |
| 019E14350 | PL 8.3 |
| 019E15551 | PL 9.9 |
| 019E16080 | PL 9.4 |
| 019E19971 | PL 9.4 |
| 019E21480 | PL 9.8 |
| 019E33441 | PL 14.1 |
| 020E04350 | PL 9.5B |
| 020K08080 | PL 8.1 |
| 020E12353 | PL 8.1 |
| 020E13603 | PL 8.1 |
| 020E13853 | PL 8.1 |
| 020E18830 | PL 7.8 |
| 020E20680 | PL 7.8 |
| 020E26340 | PL 8.1 |
| 020E26350 | PL 8.1 |
| 021E04990 | PL 10.3 |
| 021E07660 | PL 9.3 |
| 022E09390 | PL 8.3 |
| 022E10060 | PL 7.5 |

Table 1 Part Number Index

| Part Number | Part List |
|---|---|
| 022E10531 | PL 8.2 |
| 022E11441 | PL 8.1 |
| 022E11540 | PL 7.3 |
| | PL 7.4 |
| 022K28930 | PL 7.1 |
| 022K40050 | PL 10.2 |
| 022K49131 | PL 9.7 |
| 022K49205 | PL 8.1 |
| 022K49380 | PL 9.7 |
| 022K63750 | PL 8.1 |
| 023K00942 | PL 10.3 |
| 023E01620 | PL 9.5B |
| 023E06750 | PL 7.2 |
| 023E17510 | PL 7.2 |
| 026E11970 | PL 8.1 |
| 026E57690 | PL 9.3 |
| 027E03950 | PL 9.6 |
| 028K00130 | PL 9.2 |
| 028E07430 | PL 7.8 |
| 028E07771 | PL 9.8 |
| 028E11470 | PL 9.2 |
| 029K01111 | PL 8.1 |
| 029E12930 | PL 7.3 |
| 029E12940 | PL 7.5 |
| 029E13701 | PL 7.5 |
| 029E14430 | PL 7.2 |
| 029E14460 | PL 7.5 |
| 029E14750 | PL 7.4 |
| 029E14760 | PL 7.3 |
| 029E23670 | PL 14.4 |
| 029E24860 | PL 9.6 |
| 029E28060 | PL 14.1 |
| 030E16161 | PL 9.2 |
| 030K37830 | PL 8.2 |
| 030K41991 | PL 8.3 |
| 030K42002 | PL 8.2 |
| 030K46230 | PL 8.2 |
| 030K46240 | PL 8.3 |
| 030K50810 | PL 10.4 |
| 030K55634 | PL 14.1 |
| 030K55720 | PL 10.4 |

Table 1 Part Number Index

Table 1 Part Number Index

| Part Number | Part List | Part Number | | Part List |
|---|---|---|---|---|
| 030K56150 | PL 9.8 | 048K79480 | | PL 14.5 |
| 030K56160 | PL 9.8 | 049E06460 | | PL 10.2 |
| 030K57181 | PL 14.4 | 049E54970 | | PL 8.4 |
| 030K57191 | PL 14.4 | 049E54980 | | PL 8.4 |
| 030K57890 | PL 14.4 | 050E12851 | | PL 9.8 |
| 030K57900 | PL 14.4 | 050K19612 | | PL 7.1 |
| 030K64020 | PL 14.1 | 050K53080 | | PL 7.1 |
| 032E10830 | PL 8.4 | 052K03580 | | PL 7.6 |
| 033K02040 | PL 10.3 | 052E07900 | | PL 10.3 |
| 033K02430 | PL 10.3 | 052E07910 | | PL 8.1 |
| 035K04581 | PL 9.10 | 053E04750 | | PL 9.1 |
| 035K05790 | PL 9.5B | 054E03181 | | PL 9.9 |
| 035K05900 | PL 9.8 | 054E03491 | | PL 9.10 |
| 035K05941 | PL 9.5C | 054E06533 | | PL 9.5C |
| 035K05950 | PL 9.5C | 054K12300 | | PL 1.3 |
| 035E12210 | PL 9.9 | 055K13830 | | PL 9.9 |
| 035E15280 | PL 10.3 | 055K13840 | | PL 9.9 |
| 035E37240 | PL 14.4 | 055E38100 | | PL 14.4 |
| | PL 9.3 | 062E05461 | | PL 10.2 |
| 035E41150 | PL 14.4 | 062E08051 | | PL 9.3 |
| 035E41160 | PL 14.1 | 068E17110 | | PL 7.2 |
| 035E41210 | PL 9.3 | 068E17120 | | PL 7.2 |
| 037K01100 | PL 7.7 | 068E17221 | | PL 7.5 |
| 038K06601 | PL 7.8 | 068E32610 | | PL 7.4 |
| 038E06610 | PL 9.4 | 068E32620 | | PL 7.3 |
| 038E06620 | PL 9.4 | 068E38113 | | PL 10.4 |
| 038K07214 | PL 8.4 | 068E38332 | | PL 10.2 |
| 038K07241 | PL 8.2 | 068E62740 | | PL 7.8 |
| 038K09190 | PL 7.5 | 073E11710 | | PL 14.3 |
| 038K11070 | PL 10.4 | 073E11800 | | PL 14.3 |
| 048K14304 | PL 14.2 | 092E22541 | | PL 7.6 |
| 048E39380 | PL 14.5 | 092E22560 | | PL 7.6 |
| | PL 7.5 | 092E36431 | | PL 7.6 |
| 048K44401 | PL 14.2 | 092E36450 | | PL 1.3 |
| 048K44880 | PL 7.5 | 093E01501 | | PL 8.1 |
| 048K45054 | PL 14.4 | 093K02420 | | PL 9.5C |
| 048K47681 | PL 14.2 | 094K00085 | | PL 9.5B |
| 048K47692 | PL 14.2 | 094K03301 | | PL 9.6 |
| 048K47700 | PL 14.1 | 096E72590 | | PL 14.1 |
| 048K47710 | PL 14.2 | 096E72591 | | PL 14.1 |
| 048E51410 | PL 14.3 | 096E78251 | | PL 1.4 |

Table 1 Part Number Index

| Part Number | Part List |
|---|---|
| 096E78252 | PL 1.4 |
| 101E12281 | PL 1.4 |
| 101K25695 | PL 1.2A |
| 101K25780 | PL 9.5A |
| 101K26083 | PL 1.4 |
| 101K27784 | PL 1.2A |
| 101K40051 | PL 1.4 |
| 101K40571 | PL 1.2B |
| 101K42340 | PL 1.2B |
| 103E02721 | PL 1.2A |
| | PL 1.2B |
| 103E02731 | PL 1.2A |
| | PL 1.2B |
| 105K13542 | PL 1.3 |
| 105E13850 | PL 1.1B |
| 105E13863 | PL 1.1B |
| 105K15863 | PL 1.1A |
| 105K18273 | PL 1.1B |
| 108E01762 | PL 1.2A |
| 108E02282 | PL 1.2B |
| 108E02870 | PL 1.2A |
| 108E05310 | PL 1.2B |
| 109E01040 | PL 1.2A |
| | PL 1.2B |
| 110E02640 | PL 14.2 |
| | PL 7.7 |
| 110K03731 | PL 8.4 |
| 110E05500 | PL 10.4 |
| 110E06020 | PL 1.2B |
| 110K08711 | PL 8.4 |
| 110K08970 | PL 14.3 |
| 110K09430 | PL 14.1 |
| 111K00021 | PL 1.3 |
| 114K00491 | PL 1.2A |
| 114E06001 | PL 1.2B |
| 115E01410 | PL 14.1 |
| 115E02231 | PL 10.2 |
| 115P60155 | PL 15.1 |
| 115P60182 | PL 15.1 |
| 117K22761 | PL 1.2A |
| | PL 1.2B |

Table 1 Part Number Index

| Part Number | Part List |
|---|---|
| 117K26191 | PL 1.3 |
| 117K26200 | PL 1.3 |
| 117K27550 | PL 1.2A |
| | PL 1.2B |
| 117K32660 | PL 1.1B |
| 120E02150 | PL 1.2A |
| | PL 1.2B |
| 120E02160 | PL 1.2A |
| | PL 8.1 |
| | PL 7.7 |
| | PL 1.2B |
| 120E04750 | PL 9.10 |
| 120E05440 | PL 10.2 |
| 120E06510 | PL 10.2 |
| 121E01402 | PL 10.2 |
| 121E07510 | PL 7.2 |
| 121E07680 | PL 14.1 |
| | PL 7.5 |
| 121K10422 | PL 9.8 |
| 121E10610 | PL 14.2 |
| 121K10612 | PL 8.1 |
| 125K02220 | PL 9.3 |
| 125K02580 | PL 9.4 |
| 126E00492 | PL 10.2 |
| 126E00821 | PL 10.2 |
| 126K02521 | PL 7.2 |
| 126K02980 | PL 7.2 |
| 126K05992 | PL 10.1 |
| | PL 9.1 |
| 126K07152 | PL 10.1 |
| | PL 9.1 |
| 126K07330 | PL 7.1 |
| 127K04293 | PL 7.2 |
| | PL 8.1 |
| 127K09962 | PL 8.1 |
| 127E10331 | PL 10.1 |
| 127E10341 | PL 9.8 |
| 127E11240 | PL 1.3 |
| 127K17882 | PL 9.1 |
| 127K21990 | PL 9.6 |
| 127K22600 | PL 9.10 |

Table 1 Part Number Index

| Part Number | Part List |
|---|---|
| 127K26580 | PL 7.8 |
| 130E02271 | PL 14.1 |
| | PL 7.1 |
| 130E03250 | PL 7.2 |
| | PL 7.8 |
| 130E05990 | PL 8.2 |
| 130K30381 | PL 9.9 |
| 130K51801 | PL 7.1 |
| 130K53300 | PL 9.9 |
| 130K54730 | PL 10.4 |
| 130K54841 | PL 10.4 |
| 130K55130 | PL 9.7 |
| 142K01540 | PL 1.2A |
| | PL 1.2B |
| 146K00461 | PL 9.7 |
| 152K36231 | PL 1.1B |
| 160K23870 | PL 7.2 |
| 160K30980 | PL 9.3 |
| 160K33322 | PL 1.1A |
| | PL 1.1B |
| 160K37310 | PL 1.1A |
| 160K59660 | PL 1.2B |
| 160K63410 | PL 9.3 |
| 160K73561 | PL 1.2B |
| 162K23421 | PL 1.4 |
| 162K23453 | PL 1.1B |
| 162K28840 | PL 1.1A |
| 162K29730 | PL 1.1A |
| | PL 1.1B |
| 162K32650 | PL 1.3 |
| 162K41440 | PL 1.1A |
| 162K41460 | PL 1.1A |
| 162K68390 | PL 1.2B |
| 230W00652 | PL 9.2 |
| 413W30854 | PL 7.2 |
| 413W31054 | PL 7.7 |
| | PL 8.2 |
| 413W71554 | PL 9.2 |
| 414W10550 | PL 1.3 |
| 414W30551 | PL 7.2 |
| 420W10201 | PL 10.3 |

Table 1 Part Number Index

| Part Number | | Part List |
|---|---|---|
| 423W57550 | | PL 7.8 |
| 423W59001 | | PL 8.1 |
| 423W64001 | | PL 8.1 |
| 423W72201 | | PL 8.1 |
| 537K51151 | | PL 1.1A |
| 537K51161 | | PL 1.1A |
| 600K08481 | | PL 9.5B |
| 600K30680 | | PL 15.1 |
| 600K35880 | | PL 10.4 |
| 600K37740 | | PL 9.4 |
| 600K45270 | | PL 10.2 |
| 600K58720 | | PL 9.10 |
| 600K58730 | | PL 9.3 |
| 600K58740 | | PL 9.3 |
| 600K58750 | | PL 9.3 |
| 600K58761 | | PL 9.3 |
| 600K59060 | | PL 9.5A |
| 600K59260 | | PL 14.1 |
| 600K60610 | | PL 1.2A |
| 600K60900 | | PL 1.3 |
| 600K68100 | | PL 10.4 |
| 600K75311 | | PL 1.1A |
| | | PL 1.1B |
| 600K75321 | | PL 1.1B |
| 600K81873 | | PL 1.1A |
| 600K81881 | | PL 1.1A |
| 600K81882 | | PL 1.1A |
| 600K88890 | | PL 1.1A |
| 600K89510 | | PL 7.6 |
| 604K00080 | | PL 9.9 |
| 604K00440 | | PL 9.2 |
| 604K00520 | | PL 9.8 |
| 604K04430 | | PL 1.2B |
| 707W01652 | | PL 1.2A |
| | | PL 1.2B |
| 809E02290 | | PL 14.1 |
| 830E28580 | | PL 1.2B |
| 891E01960 | | PL 7.5 |
| 891E01961 | | PL 7.5 |
| 891E09080 | | PL 14.2 |
| 891E25140 | | PL 1.2B |

**Table 1 Part Number Index**

| Part Number | Part List |
|---|---|
| 891E70530 | PL 1.4 |
| 891E70531 | PL 1.4 |

# 6 General Procedures


**Diagnostics**

To Enter The Diagnostic Mode ..... 6-3
To Exit The Diagnostic Mode ..... 6-4
Input Diagnostic Test Procedure ..... 6-4
Input Diagnostic Test Codes ..... 6-5
Output Diagnostic Test Procedure ..... 6-5
Output Diagnostic Test Codes ..... 6-6
Stepper Motor Commands ..... 6-7
To Enter Multiple Tests (Chaining) ..... 6-7
To Exit from Multiple Tests ..... 6-8
Special Tests ..... 6-8

**General Procedures**

GP 1 HVPS Checkout ..... 6-11
GP 2 Image on Drum (Panic Stop) Procedure ..... 6-11
GP 3 Drum Maintenance ..... 6-12
GP 4 Drum Cleaning Enhancement ..... 6-13
GP 5 Communication Loopback Test ..... 6-13
GP 6 Downloading Firmware from a Laptop ..... 6-14
GP 7 NVM Dump of Adjustable Settings ..... 6-15

**Service Notes**

Transfer and Developer Bias Voltages incorrect (Tag 19) ..... 6-17
Power Cord Outlet Pulls Out Of AC Module ..... 6-18
PRE-TAG 9 Maximum Length Shortfall ..... 6-18
Wavy Lines When Connected To XPC or Non Xerox Controller ..... 6-19
LL-52 Errors After Installing New Control PWB ..... 6-19
Cooling Fan Not Running ..... 6-20
Cleaning Blade Squeals During Print Cycle ..... 6-20
Toner Cleaning Auger Bound Up ..... 6-21
LL-22 Caused By Metal Filings ..... 6-21
Intermittent Black Lines Or Background Bands ..... 6-22
Bent Corners (Dog Ears) On Lead Edge Of Narrow Media ..... 6-22
Problems With Film Stacking ..... 6-23
Low Solid Area Density At Install ..... 6-24
Intermittent Extra Print ..... 6-24
Loud Noise From HVPS ..... 6-25
Troubleshooting Photoreceptor Drive Problems ..... 6-25
Photoreceptor Damage ..... 6-26
Image Displacement (Rollover) On Vellum Or Film ..... 6-26

**Installation**

Installation Procedure ..... 6-29
Product Demonstration ..... 6-40
Installation Checklist ..... 6-41

**Removal**

Removal Procedure ..... 6-43

**Tools**

General Tools and Supplies (NACO) ..... 6-47
General Tools and Supplies (EO) ..... 6-48
Molex Connector Repair Procedure ..... 6-50

**Product Specifications**

Product Specifications ..... 6-53

**8825 Change Tag**

8825 Change Tag Information ..... 6-55

**8830 Change Tag**

8830 Change Tag Information ..... 6-59

## To Enter The Diagnostic Mode

The diagnostic mode is entered by pressing and holding the zero (0) button while switching on the printer. The Diagnostic Mode may also be entered from the Control Panel by entering the Printer Menu > Diagnostics, and entering the password (6789).

When entering the diagnostic mode, the Message Display will indicate the Copyright message, the message ROM configuration, and the software revision level.

( Figure 1): The following message will be displayed when the diagnostic mode is entered.

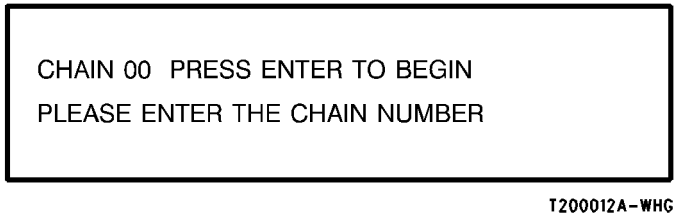


**Figure 1 Control Panel Buttons**

Enter the first two digits of the code and press **Enter** button, then enter the second two digits of the code, and press the **Enter** button to begin the test.

(Figure 2): The Control Panel buttons are identified in the following diagram:

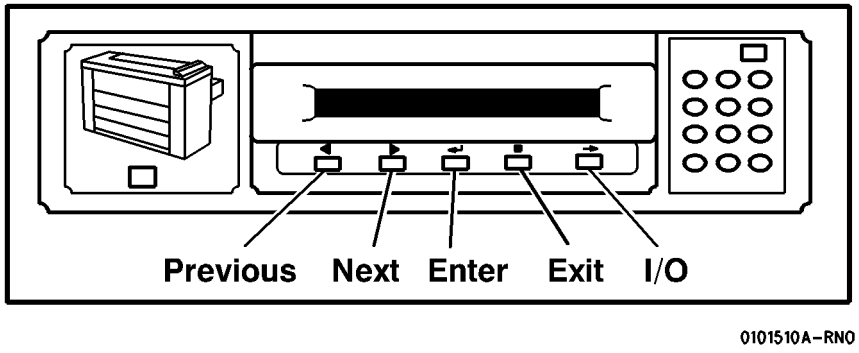


**Figure 2 Control Panel Buttons**

The code entered will be displayed on the Control Panel. The test name will be in the bottom line of the display along with test feedback information. There also may be additional information displayed depending on the test being run.

The **Exit** button is used to stop the tests.

The **Exit** button is used to clear the entry.

The Test Codes consist of a chain number and a test number. The chain numbers correspond to the same chain numbers that are used in the Service Manual to identify functional areas in the printer. The test numbers are sequential numbers to identify the tests within a chain.

The chain numbers used are listed below

**Table 1**

| Chain Number | Functional Area |
|---|---|
| 01 | Standby Power |
| 02 | User Interface (Control Panel) |
| 03 | Printer Run Control |
| 04 | Drives |
| 06 | Exposure |
| 07 | Media Supply |
| 08 | Media Transportation |
| 09 | Xerographics |
| 10 | Fusing/Print Transportation |
| 11 | Finishing |
| 14 | Communication |

## To Exit The Diagnostic Mode

Enter the test [0361] or switch the printer power off, wait 5 seconds, then switch it on.

## Input Diagnostic Test Procedure

1. Enter the Diagnostic Mode
2. Enter the Test Code
3. Press the **Enter** button to begin the test.
4. Manually operate the component that is to be tested.
5. The condition of the component will be indicated in the message display window. The state of the component is indicated by a **0** for low state and a **1** for high state
6. Press the **Exit** button to stop the diagnostic test
7. Press the **Exit** button again to clear the chain

## Input Diagnostic Test Codes

**Table 1**

| Code | Component Tested |
|---|---|
| [0101] | Front Door Interlock |
| [0102] | Line Voltage Sense |
| [0103] | Line Frequency Sense |
| [0104] | Line Voltage High/Low |
| [0105] | Cut Sheet Feed Shelf Interlock |
| [0106] | Top Cover Interlock |
| [0202] | Keyboard Test |
| [0211] | Message ROM Test |
| [0701] | Module Loop Interlock (Media Transport and Xero Mod installed) |
| [0702] | Cutter Drawer Interlock |
| [0707] | Roll 1 Sensor Input |
| [0708] | Roll 2 Sensor Input (8830 and 8825 with Tag/MOD 89) |
| [0709] | Roll 3 Sensor Input |
| [0710] | Roll 1 Motion Sensor Input |
| [0711] | Roll 2 Motion Sensor Input (8830 and 8825 with Tag/MOD 89) |
| [0712] | Roll 3 Motion Sensor Input |
| [0713] | Roll 1 Drawer Sensor Input |
| [0714] | Roll 2 Drawer Sensor Input (8830 and 8825 with Tag/MOD 89) |
| [0715] | Roll 3 Drawer Sensor Input |
| [0721] | Cutter Home Sensor |
| [0801] | Bypass Sensor (8830 and 8825 with Tag/MOD 90) |
| [0802] | Buckle Sensor |
| [0803] | Media Registration Sensor |
| [0807] | Exit Sensor |
| [0808] | Catch Tray Full Sensor (Stacker) |
| [0901] | Toner (Cartridge) Home Sensor |
| [0902] | Drum Motor Stall Sensor |
| [1005] | Fuser Jam Switch |
| [1008] | Fuser Open Sensor |
| [1010] | Fuser Scorch Sensor (To reset, power OFF then ON) |

***NOTE:*** *8825: The Media Drawer 3 is not available on the 8825. The Media Roll Drawer 2 is optional and is identified as Tag/MOD 89.*

## Output Diagnostic Test Procedure

The Output Diagnostic Test is used verify correct operation of output components. The output diagnostic test allows the operation of the individual or multiple (chaining) output component(s) in order to verify operation.

Go to svc.8830prt.16073 for instructions on how to enter multiple tests.

1. Enter the Diagnostic mode.
2. Enter the chain number (first two numbers on the code).
3. Press the **Enter** button.
4. Enter the test number (last two numbers of the code).
5. Press the **Enter** button to begin the test.
6. Observe the component for the correct operation. If the component and its circuitry are functioning correctly, the component will operate. If they are not, refer to the documentation to isolate the problem.
7. Press the **Exit** button to stop the Diagnostic Test.
8. To exit the diagnostic mode, enter the test **[0361]** or switch the printer power off, wait 5 seconds, then switch it on.

***NOTE:*** *The Fuser must be at operating temperature before making voltage checks or operating the diagnostics.*

# Output Diagnostic Test Codes

***NOTE:*** *8825: The Media Drawer 3 is not available on the 8825. The Media Roll Drawer 2 is optional and is identified as Tag/MOD 89.*

**CAUTION**

*Do not run diagnostic code [0403] if the fuser is cold. Printer damage can occur. Diagnostic code [0403] runs the fuser motor, the developer motor, and the drum motor. The fuser heater is turned off while the printer is in the diagnostic mode.*

**Table 1**

| Code | Component Tested |
|---|---|
| [0201] | Display Test (individual LEDs) |
| [0203] | Service Meter (half clicks meter on ENTER, completes click on EXIT) |
| [0210] | Control Panel LEDs |
| [0403] | Runs Drum, Developer and Fuser Motors (See CAUTION above). |
| [0703] | Roll Feed Stepper - Forward |
| [0704] | Roll Feed Stepper - Reverse |
| [0716] | Roll Drive Motor and Roll 1 Feed Clutch (CL1) |
| [0717] | Roll Drive Motor/Roll 2 Feed Clutch (CL3) (8830/8825 with Tag/MOD 89) |
| [0718] | Roll Drive Motor and Roll 3 Feed Clutch (CL5) |
| [0720] | Cutter Brake |
| [0723] | Cutter Drive Motor (1 cycle) |
| [0727] | Roll 1 Rewind Clutch (CL2) |
| [0728] | Roll 2 Rewind Clutch (CL4) (8830 and 8825 with Tag/MOD 89) |
| [0729] | Roll 3 Rewind Clutch (CL6) |
| [0730] | Roll 1 Forward (Feed) Clutch (CL1) |
| [0731] | Roll 2 Forward (Feed) Clutch (CL3) (8830 and 8825 with Tag/MOD 89) |
| [0732] | Roll 3 Forward (Feed) Clutch (CL5) |
| [0733] | Bypass Clutch (8830 and 8825 with Tag/MOD 90) |
| [0905] | Toner Dispense Motor |
| [0914] | Cooling Fans ON at slow speed if Fuser is cold |
| [0917] | Transport Drive Motor |
| [0925] | Toner Cartridge (1 revolution) |
| [0956] | Test Pattern - additional delay |
| [0957] | Display area coverage of last print made. |
| [0966] | Erase Lamp |
| [1009] | Fuser Power Relay ON |

## ADDITIONAL INFORMATION:

1. Codes **[0728]** and **[0731]** must be chained with **[0704]** in order to check the operation of the Feed and Rewind clutches for Roll 2.
2. Codes **[0727]** and **[0730]** must be chained with **[0703]** in order to check the operation of the Feed and Rewind Clutches for Roll 1.
3. Codes **[0729]** and **[0732]** must be chained with **[0703]** in order to check the operation of the Feed and Rewind Clutches for Roll 3.
4. The fuser must be at the run temperature before the Drive Motors are switched ON to prevent damage to the printer.
5. Codes **[0703]** and **[0704]**: These Stepper Motor codes have output control tests that are capable of driving the motors forward or backward at any speed. These tests are entered using the correct chain and test number, and then entering one of the numbers in the Stepper Motor Command table shown on the right.

## Stepper Motor Commands

**Table 1**

| Button Pressed | Response |
|---|---|
| 0 | Switches stepper motor OFF. |
| 1 | Switches the stepper motor ON, in the forward direction, at the NVM rate for Bond media. |
| 2 | Switches the stepper motor ON, in the forward direction, at the NVM rate for Vellum media. |
| 3 | Switches the stepper motor ON, in the forward direction, at the NVM rate for Film media. |
| 4 | Switches the stepper motor ON, in the reverse direction, at the current NVM rate for reverse. |
| 5 | Holds the stepper motor at the current position, low current. |
| Next | Makes the currently outputted stepper motor rate one count longer, slowing the actual feed rate. |
| Previous | Makes the currently outputted stepper motor rate one count shorter, increasing the actual feed rate. |
| Enter | Enters the currently outputted stepper motor rate into NVM |
| Exit | Switches the stepper motor OFF and returns the printer to the Test Entry Mode. |
| Media | Does not affect the stepper motor, and returns the printer to the Test Entry Mode. |

## To Enter Multiple Tests (Chaining)

The Media button is used when entering more than one test. To chain one code to another, perform the following:

1. Enter the desired code for the first test.
2. Press the MEDIA button, then enter the additional code(s) for additional tests.

## To Exit from Multiple Tests

Multiple tests can be switched off by two methods.

1. Enter the codes in the reverse sequence from the way they were initially entered, pressing the EXIT button after each code.
2. Press and hold the DOT (.) button while pressing the EXIT button. This will clear all of the codes that were entered.

## Special Tests

The following tables give special diagnostic tests that are used to enable or disable features or to change the operating parameters of the printer. To enter a Special Test, the printer must first be in the diagnostic mode

Each special test has a value that is stored in non-volatile memory (NVM). If there is a default value, it is found in the Value column.

NVM values may be changed by entering the Special Test mode, pressing the ENTER button, and then using the PREVIOUS and NEXT arrow keys to select the desired NVM value. To enter the selected value, press the ENTER button again. To exit the test, press the EXIT button.

***NOTE:*** *If there is a reference to a procedure, the procedure must be followed in order to perform the test correctly.*

**Table 1**

| Code | Description | Value |
|---|---|---|
| [0211] | Language ROM Test<br>0 = Both Language ROMs are defective.<br>1 = Primary Language ROM is OK<br>2 = Secondary Language ROM is OK<br>3 = Both Language ROMs are OK | |
| [0261] | Country Configuration<br>0 = 115 volts<br>1 = 240 volts<br>2 = 220 volts | |
| [0262] | Media Width Detect<br>0 = 8830 DDS sizes<br>1 = Finesse 1.0 sizes<br>2 = FX sizes<br>5 = All sizes | |
| [0263] | Billing Meter Count<br>This code is used to select the billing in meters or inches.<br>0 = inch<br>1 = metric (decimeter) | NACO<br>0<br>EO<br>1 |
| [0300] | Jump 0. Restarts the IOT. | |
| [0360] | NVM Reset to Default.<br>Entering the number 1 or 3 resets all the NVM values to the default values.<br>Entering the number 2 allows the electronic billing to be reset to any desired value.<br>1 = NACO NVM Default<br>2 = Billing<br>3 = EO NVM Defaults | |
| [0361] | Watchdog Timer Test.<br>This code can be used to exit the Diagnostic mode | |

**Table 1**

| Code | Description | Value |
|---|---|---|
| [0362] | Diagnostic Time-out interval. This code allows the adjustment of the time interval that the printer will stay in the Diagnostic mode. The time interval range is 5 to 50 minutes. | 5 min. |
| [0363] | NVM Reset<br>This code allows the NVM values to be reset to the previously adjusted values. The software compares the NVM values to a backup file and will reset the values that are not the same as the values in the backup file. | |
| [0364] | Reset NVM Check Sum | |
| [0365] | NVM Printout of NVM contents in hex format. | |
| [0366] | NVM Dump of Adjustable Settings. NOTE: This information is accessible through the Printer Main PWB, P308. Refer to GP 7, NVM Dump of Adjustable Settings. | |
| [0391] | Recent Fault Log<br>Displays the last 99 faults that have occurred. Displays the fault code, how many events ago it occurred, and the billing meter reading at the time the fault was originally displayed. Log entries are numbered from 1 to 99, with 1 being the most recent. | |
| [0392] | Fault History Log<br>Displays, in alphabetical order, the number of occurrences of each of the fault codes since the log was last cleared. | |
| [0398] | Display Checksums | |
| [0602] | Vertical Magnification<br>Go to ADJ 8.1 Vertical Magnification Adjustment | |
| [0700] | Cut Length Adjustment<br>Go to ADJ 8.3 Cut Length. | 10 (8 mm) |
| [0760] | Delay Between Prints (Film) Increases the time delay between making prints on Film Media | 1-30 Secs |
| [0809] | Enable/Disable Stacker Full Sensor | |
| [0860] | Image Registration<br>Go to ADJ 8.2 Lead Edge Registration. | 10 (8 mm) |
| [0903] | Input LED Output Value | |
| [0906] | Tone Up/Tone Down (Automatically adjusts toner concentration until the control set point is reached). | |
| [0917] | Transport Drive Motor Speed Adjustment. Note: This is not a recommended field adjustment. | |
| [0920] | Displays Run Time. | |

**Table 1**

| Code | Description | Value |
|---|---|---|
| [0921] | Electrostatic Setup<br>This code is used adjust the electrostatics. When in this code, additional tests can be run by pressing the following buttons:<br>1 Transfer/Detack Corotrons ON<br>2 Adjust Vhigh<br>3 Adjust Vlow<br>4 Adjust Image Density ( ADJ 9.3)<br>5 Illuminates the LED Image Bar for observation purposes.<br>6 Calibrates the Toner Control Sensor.<br>7 Humidity Sensor control point setting. | |
| [0921] (cont'd) | Next/Previous -<br>Pressing these buttons affects the Duty Cycle value in Tests 2 and 3, and changes Vhigh in [ **0921-2**].<br>When running Tests 2 and 3, pressing the Enter button copies the current duty cycle value to NVM. | |
| [0922] | This code disables toner faults so that the printer will continue to operate.<br>While in Diagnostics, enter the code **[0922]** and select **[Yes]** for running with toner faults. Enter the code **[0361]** to exit the diagnostic mode. | |
| [0926] | Resets the Toner Control Bias to default value | |
| [0955] | IOT Internal Test Pattern Print<br>9 test patterns are available. The following parameters can be selected:<br>Paper source (roll)<br>Length of print<br>Print quantity<br>Folder program (if folder is available) | |
| [1004] | Fuser Run Temperature Display. This code switches the fuser heat rod on and increases the fuser heat roll temperature to the run temperature. The run temperature is displayed in degrees (F) and degrees (C). At run temperature, the Drum/Developer and Fuser Drive Motors are switched on. The following conditions may exist when the message **FUSER CAN NOT BE TURNED ON, CONDITION XX** is displayed:<br>03 Developer Cover is open.<br>04 Cutter Cover is open<br>05 Xerographic Interlock is open.<br>06 Right side door is open.<br>07 Document Handler interlock is open.<br>08 Fuser status problem. Turn power off and try again.<br>09 Illumination status problem. Turn power off and try again. | |
| [1006] | Display Fuser Temperature (Analog) | |

**Table 1**

| Code | Description | Value |
|---|---|---|
| [1010] | Fuser Scorch Sensor<br>(Thermistor RT2)<br>1 = Fuser temperature less than or equal to 420° F (215°C)<br>0 = Fuser temperature greater than 420° F (215°C)<br>***NOTE:*** *Power must be switched OFF then ON, in order to reset signal.* | |
| [1026] | Reset the Fuser Control NVM to default values. | |
| [1030] | Reset Oil Web.<br>Resets the web counter when a new web has been installed. | |
| [1031] | Specify Oil Web Position.<br>Used if the NVM fails or is reset. This sets the controls for web use. (Enter the diameter of the supply spool in millimeters.) | |
| [1032] | Specify Web Oil Rate.<br>This is used to adjust the web oil rate from 50% to 200%. (A 100% setting is nominal.) This setting directly impacts the life of the Oil Web. 50% means that 1/2 as much web is used. | |
| [1033] | Advance Oil Web.<br>Used to tension the web correctly when the oil assembly is removed and reinstalled. | |
| [1034] | Estimate Oiler Web Life.<br>Displays the remaining web life in print feet or meters. | |
| [1035] | Disable LL-07 Oiler Fault Detection | |
| [10-36] | Disable LL-12 Fault Detection (Drum Stall) | |
| [1060] | Fuser Temperature bond media adjustment. Allows the adjustment of the Fuser Run Temperature: 300° F (149C) with 36 inch wide bond media.<br>Go to ADJ 10.1 Fuser Temperature. | |
| [1062] | Fuser Temperature vellum media adjustment: 294°F (146°C). ***Go to ADJ 10.1 Fuser Temperature.*** | |
| [1063] | Fuser Temperature film media adjustment: 300°F (149°C). ***Go to ADJ 10.1 Fuser Temperature***. | |
| [1101] | Folder Status | |
| [1401] | Loopback Test for Remote Access Interface | |
| [1402] | Loopback Test for Controller Command / Status | |
| [1403] | Loopback Test for Finisher Port | |

## GP 1 HVPS Checkout

The purpose of this checkout procedure is to verify correct operation of the High Voltage Power Supply.

( Figure 1): The location of the HVPS Test Points is shown in the drawing at right.

***NOTE:*** *Use the 26V RTN test point when measuring all voltages. Failure to use this test point can cause incorrect readings.*

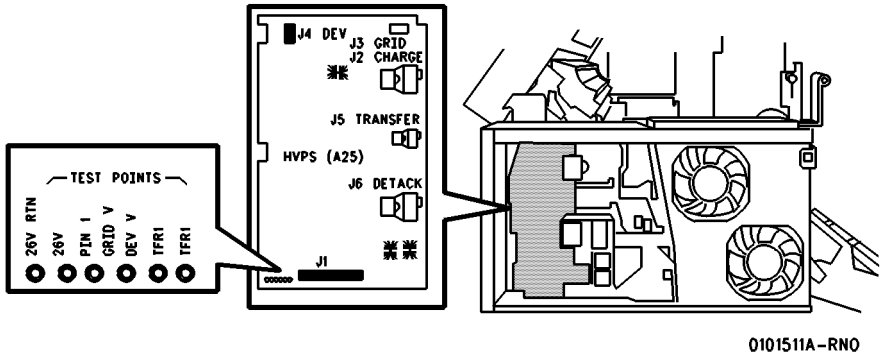


**Figure 1 Location of HVPS Test Points**

Perform the voltage checks shown in Table 1.

**Table 1 HVPS Voltage Checks**

| COM Meter Lead | V-Ohms Meter Lead | Standby Measured Voltage | In Print Measured Voltage | Diag-nostic Code |
|---|---|---|---|---|
| 26V RTN | 26V | 26.5 VDC | 26.5 VDC | |
| 26V RTN | PIN I | Less than 0.05 VDC | 2.3 ± 0.05 VDC | |
| 26V RTN | GRID V | N/A | N/A | |
| 26V RTN | DEV V | Less than 0.05 VDC (NOTE: -240 VAC at the Developer Housing) | -4.20 ± 0.05 VDC | |
| 26V RTN | TFR I | Less than 0.05 VDC | 0.6 ± 0.1 VDC | [921-1] |
| 26V RTN | DET I | Less than 0.05 VAC | 1.0 VAC | [921-1] |

## GP 2 Image on Drum (Panic Stop) Procedure

This procedure allows the isolation of print quality problems by observing the image on the Drum before the transfer of the toner to the media. If the defect is visible on the Drum before the transfer, the defect is related to the charge, the imaging, or the developer. If the defect is visible on the print after the transfer, the defect is related to the transfer or fuser.

1. Make a test print. Open the right door interlock when the test pattern is almost half way beyond the Drum (Print is just starting to exit from the printer).
2. Remove the Developer Module.
3. If the defect is visible on the developed image, the defect cause is related to the charge, the imaging or the developer. If the defect is not visible, the defect cause is related to the transfer or the fuser.

# GP 3 Drum Maintenance

**WARNING**

**When performing this drum maintenance, do the following:**

- **Ensure that there is adequate ventilation in the area.**
- **Use protective gloves at all times.**
- **Do not smoke.**
- **Wash your hands when the procedures are completed.**

**CAUTION**

*These procedures must be completed in the shortest possible time in order to reduce the effects of light shock.*

## Washing Procedure

Washing Materials:

- Drum Maintenance Kit
- Film Remover

1. Remove the Drum Assembly from the Xerographic Module ( REP 9.2).
2. Put on gloves.
3. Gently remove any dry ink/toner and developer from the surface of the drum, using a dry polyurethane pad.
4. Apply Film Remover to a clean polyurethane pad.
5. ( Figure 1 ): Wash the drum from end to end, using a circular motion.

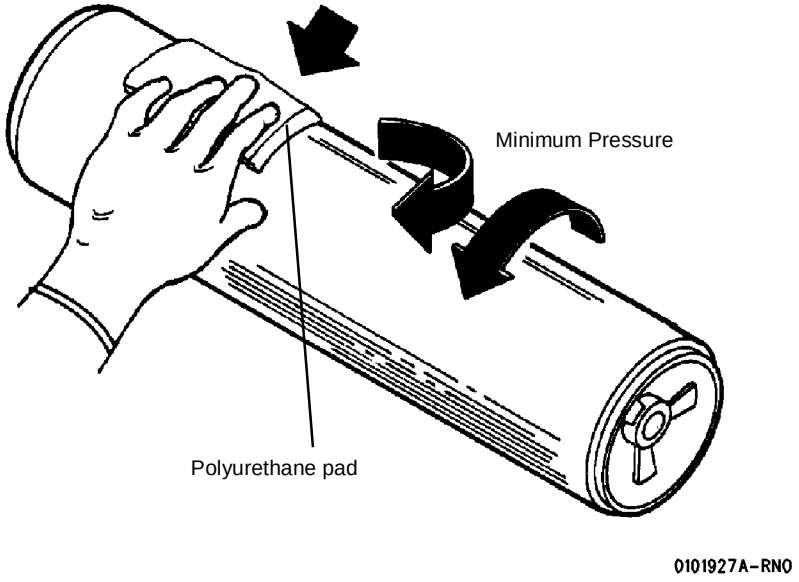


**Figure 1 Washing the Drum**

***NOTE:*** *Ensure that the ends of the drum are washed.*

6. Using the clean side of the polyurethane pad, continue washing the drum until the entire surface of the drum is covered with film remover.
7. Allow enough time for the air to dry the surface of the drum.
8. Use the dusting pouch to apply a thin layer of Zinc Stearate (8R181) over the entire surface of the drum.
9. Buff the surface of the drum using the clean side of the dry polyurethane pad.

***NOTE:*** *Ensure that the ends of the drum are buffed as well as the center of the drum.*

10. Continue to buff the surface of the drum for three complete revolutions of the drum.
11. Apply a final thin layer of Zinc Stearate over the entire surface of the drum.
12. Reinstall the drum.
13. Enter the diagnostic mode. Enter test [1004] and allow the printer to run for five more minutes.
14. Place the used washing materials in the disposal bag.
15. Wash your hands.

## GP 4 Drum Cleaning Enhancement

1. Remove the Drum Assembly (REP 9.2).
2. Use the dusting pouch (8R181) to apply a thin layer of Zinc Stearate over the entire surface of the drum.
3. With a new lint-free cloth (600S4372), wipe the entire surface of the drum, using moderately heavy pressure. Use a back and forth motion of 6 - 10 strokes while revolving the drum three revolutions.
4. Repeat steps 2 and 3 one time and then continue with step 5.
5. Apply a thin layer of Zinc Stearate over the entire surface of the drum.

Reinstall the drum assembly.

Rotate the Drum manually to clean off excess zinc stearate.

## GP 5 Communication Loopback Test

***NOTE:*** *in order to perform this test, it is necessary to use the Loopback Kit (600K43210).*

### For printers with a Controller:

1. Remove the Controller and disconnect the ribbon cable (J307B) from the IOT Main PWB.
2. Connect the loopback cable (152K59420) to J307B on the IOT Main PWB.
3. Connect the loopback tool (114E4680) to the loopback cable.
4. Enter [1402} to run the communication test.
5. If the test passes, a 0 will be displayed. The problem is then in the ribbon cable or the Controller. Go to the E-701 RAP in the 8825/8830 Controller Service Manual.
6. If the test fails (1), replace the IOT Main PWB ( PL 1.1A).

### For printers without a Controller:

1. Connect the loopback tool to the lower connector located on the rear right side of the IOT.
2. Enter [1402].
3. If the test passes (0), the problem is the XPC or the connection between the XPC and the printer.
4. If the test fails (1), remove the right rear lower cover and disconnect the cable at J308 on the Main PWB.
5. Connect the loopback cable (152K59420) into J308 and connect the loopback tool (114E04680) to the loopback cable and repeat the test.
6. If the test passes, replace the cable.
7. If the test fails, replace the IOT Main PWB ( PL 1.1A).

# GP 6 Downloading Firmware from a Laptop

***NOTE:*** *A point-to-point RS232 9-pin adaptor is required for this procedure.*

1. Power on the Printer, but do not power on the Controller.
2. (Figure 1 ): Connect a null-modem cable between the serial port of the laptop computer and the serial port J-308 on the Printer Main PWB.

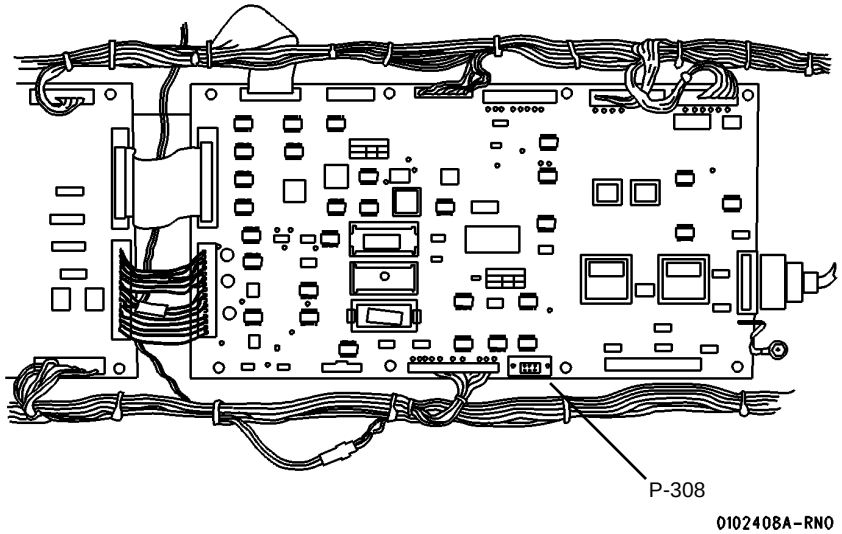


**Figure 1 Serial Port Connection - Printer Main PWB**

3. Enter the diagnostic code Chain 03 Test 01. The display indicates: DOWNLOAD FILE(S) TO PORT. EXIT TO RESET PRINTER.
4. Insert the floppy disk containing the printer firmware into the floppy disk drive on the laptop computer.
5. Obtain the MS-DOS prompt from within Windows (START/ PROGRAMS/ MSDOS COMMAND).
6. Type A: <CR> The A> prompt is then displayed.

   ***NOTE:*** *The batch file on the floppy disk will automatically set the COM1 port parameters on the laptop computer to 8 bits, 1 stop bit, odd parity, and 19,200 baud (bits per second).*

7. Exercise the download.bat file.
8. Type DIR to determine the name of the files contained on the disk.
9. Type: DOWNLOAD F xxxxxxxx.iot COM1 (where xxxxxxxx is the file name of the firmware to be downloaded, and COM1 is the serial port to which the null modem cable is connected on the laptop computer. The control panel display indicates the version number of the firmware, and shows: RECEIVING RECORD XXXXX.
10. Wait until the display indicates: FILE SUCCESSFULLY PROGRAMMED. The computer displays ONE FILE COPIED and then the A:> prompt.
11. If a language is to be downloaded, type: DOWNLOAD LP XXYY.IOT COM1 for the primary language, or DOWNLOAD LS XXYY.IOT COM1 for the secondary language, where XX is the language identifier in the file name, and YY is the revision indicator.

    The language indicators are:

    - 00yy.IOT (US English)
    - 01yy.IOT (EO English)
    - 02yy.IOT (AO Portuguese)
    - 07yy.IOT (EO Dutch)
    - 09yy.IOT (EO French)
    - 10yy.IOT (EO German)
    - 12yy.IOT (EO Italian)
    - 18yy.IOT (EO Swedish)
    - 19yy.IOT (EO Spanish)

    ***NOTE:*** *If the display indicates COMMUNICATIONS ERROR, recover as follows:*

    *a. Press EXIT on the Printer Control Panel.*
    *b. Type A:*
    *c. Check that you have sent the correct file.*
    *d. Recheck that the serial cable is seated correctly.*
    *e. Switch off the Printer. Hold down the 9 and 0 keys on the Printer Control Panel, while switching on the Printer.*
    *f. Restart the download as described above.*
    *g. If the problem still exists, or a file cannot be downloaded, try the procedure using COM2 on the computer.*

    ***NOTE:*** *If the display indicates FLASH PROGRAMMING ERROR, recover as follows:*

    *a. Retry the download as described above.*
    *b. If the problem still exists, replace the Printer Main PWB (REP 3.1 in Section 6 of this service manual) and try the download again.*

12. After the downloadings are complete, power off the printer.
13. Disconnect the Printer Power Cord.
14. Disconnect the null-modem cable.

# GP 7 NVM Dump of Adjustable Settings

The purpose of this procedure is to enable the service representative to access a listing of current NVM (Non-Volatile Memory) settings resident in the 8825/8830 Printer. If desired, this information can then be transferred to a computer, printed out and saved. This information can be of great value in recreating the customer's printer settings in the event of a component failure. Information can also be recorded in the Service Log.

1. Power on the Printer, but do not power on the Controller.
2. Remove the two screws at either side of the printer Lower Right Side Cover. Tilt the cover (with Controller attached) backward and gently set the Controller on the floor.
3. (Figure 1): Connect a null-modem cable between the Serial Port of the computer and either the Diagnostic Remote Port of the printer (if installed) or J-308 on the Printer Main PWB.

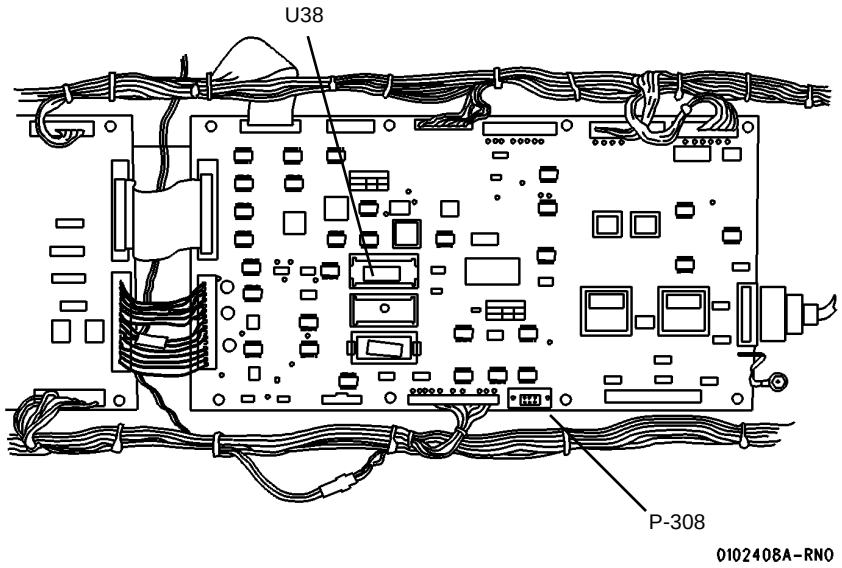


**Figure 1 Serial Port Connection - Printer Main PWB**

4. Access the terminal emulator software on the computer being used.
5. Using the terminal emulator software on the computer, set the Serial Port up for the following:
   - Baud rate: 19, 200
   - 1 Stop Bit
   - Even parity
   - Data bit: 8
6. Hold down the zero button on the 8825/8830 Printer Control Panel, and turn on the controller and the printer.
7. Enter the diagnostic code [0366] and hit the Enter key.
8. The NVM settings are now displayed on the computer screen. This information can be downloaded to a file in the computer memory and saved for future use.

# Transfer and Developer Bias Voltages incorrect (Tag 19)

## PROBLEM

Transfer and developer voltages are set incorrectly.

## CAUSE

Late in the program it was determined that the developer bias should be set at -420 VDC and transfer should be set at .6 ma DC . Inadvertently the change was never cut in on the manufacturing line. The current settings can cause intermittent broken black lines or background bands in the process direction.

## SOLUTION

**PLEASE MAKE THE FOLLOWING ADJUSTMENT CHANGES TO THE printer ON THE NEXT SERVICE CALL:**

1. **ADJUST the Transfer output to "+ 0.6 VDC"**

   Go to GP 1 HVPS Checkout in this section. Locate the Transfer potentiometer ("TRF I") nearest the center of the HVPS (closest to the transfer output transformer module). Carefully remove the RTV. Using the 26V return on the HVPS as the common and the **"TFR I"** test point, adjust the potentiometer to obtain **"+ 0.6 +/- 0.1 VDC"** during a print.

Mark appropriate change in manual (Table 1 on page 6-10).

## CHANGE the Developer Bias default -

Enter diagnostic mode - Go to . Input diagnostic test code **84**. **ENTER 1E** (E is obtained by holding down the period(.) button and striking the "4" button). **ENTER** Message: chain 84; address 01E is 4E. Using the "Previous Button" scroll down six (6) times or until the display reads chain 84; address **01E is 48**.

**ENTER**

**EXIT**

**EXAMINE Developer bias output level** - Go to GP 1 HVPS Checkout in Section 6 of this manual; . Using the 26V return on the HVPS as the common and the **"DEV V"** test point. In the print mode the output should be **"(-) 4.20 +/- 0.05 VDC"**. Mark appropriate change in manual (Table 1 on page 6-10).

**Mark off TAG 19 on the TAG matrix**

Once these adjustments are made you may see a slight increase in toner consumption. The benefits of doing these adjustments are:

1. Increase "Cleaning Field" latitude
   - Reduced occurrence of background bands in the process direction.
   - Reduced occurrence of intermittent broken black lines in the process direction.
2. Provides additional lubrication for the cleaning blade.

**CAUTION**

*The tolerance window for electrostatics on the printer is very narrow. This printer must be set to specifications using the electrometer to ensure proper performance. If electrostatics are set incorrectly the printer will exhibit print quality problems, excessive dirt levels, and increased toner consumption.*

## REQUIREMENTS FOR FIELD RESOLUTION

- DOCUMENTATION N/A
- TAG 19
- PART NUMBERS N/A
- CUT IN SERIAL NUMBER N/A

## Power Cord Outlet Pulls Out Of AC Module

### PROBLEM

The power cord outlet may pull out of the AC module when trying to unplug the AC Power Cord.

### CAUSE

The cut out in the AC Power Module for the power cord socket is too large.

### SOLUTION

Order and install the AC Mod kit.

### REQUIREMENTS FOR FIELD RESOLUTION

- DOCUMENTATION
  N/A
- TAG 5
- PART NUMBERS
  600K606610 AC Mod Kit
- CUT IN SERIAL NUMBER
  U.S - 8YG060517
  E.O - 110907119-2

## PRE-TAG 9 Maximum Length Shortfall

### PROBLEM

Pre-Tag 9 firmware is has a maximum length shortfall. No matter what length you tell the printer to print, it will only print a maximum length of 33' ( m).

### CAUSE

Error in the firmware.

### SOLUTION

Ensure that the IOT firmware is at least TAG 9.

### REQUIREMENTS FOR FIELD RESOLUTION

- DOCUMENTATION
  N/A
- TAG N/A
- PART NUMBERS
  N/A
- CUT IN SERIAL NUMBER
  N/A

## Wavy Lines When Connected To XPC or Non Xerox Controller

### PROBLEM

The printer produces prints with wavy lines when connected to a Xerox XPC or a non Xerox controller. This problem does not occur with a Xerox controller due to the short interface cable.

### CAUSE

There is a timing problem in the P193R interface.

### SOLUTION

Order and install a TAG 10 IOT Control PWB. This part is on "j" control you must call tech support to get approval before placing an order.

### REQUIREMENTS FOR FIELD RESOLUTION

- DOCUMENTATION
  N/A
- TAG 10
- PART NUMBERS
  600K62420 TAG 10 UPGRADE KIT
- CUT IN SERIAL NUMBER
  US - 8YG060517
  EO - 110907207-5

## LL-52 Errors After Installing New Control PWB

### PROBLEM

LL-52 errors after installing a new control pwb.

### CAUSE

NVM eprom was not moved from the original Control PWB to the new Control PWB.

### SOLUTION

Ensure that when the Control PWB is changed, that the NVM eprom (Component U40) is transferred to the new PWB. Ensure that the NVM eprom is installed onto the Control PWB with the "dot" in the lower **left** corner.

### REQUIREMENTS FOR FIELD RESOLUTION

- DOCUMENTATION
- REP 3.1
- TAG N/A
  PART NUMBERS
  N/A
- CUT IN SERIAL NUMBER

## Cooling Fan Not Running

### PROBLEM

Cooling fan not running.

### CAUSE

Early IOT firmware could cause a cooling fan to start improperly. This problem only occurs with Delta cooling fans.

### SOLUTION

Check the label on the cooling fans. If the label reads Delta DC Brushless install TAG 11 Firmware (Ver 1.03). If Japan Servo is the manufacturer replace the cooling fan assembly.

If not noticed, the temperature inside the printer would increase on long runs. The first indication would be cleaning blade squeal during operation. Then the next probable failure would be a bound up toner auger from solidified toner.

### REQUIREMENTS FOR FIELD RESOLUTION

- DOCUMENTATION
  N/A
- TAG 11
- PART NUMBERS
  U.S. - 600K59933
  E.O. - 600K59953
- CUT IN SERIAL NUMBER
  U.S. - 8YG060368 and up
  E.O. - 110907114-1 and up

## Cleaning Blade Squeals During Print Cycle

### PROBLEM

Squealing noise from cleaning blade during print cycle.

### CAUSE

Excessive heat build up in the printer.

### SOLUTION

Make sure both cooling fans are functioning properly. If they are not see the article titled “Cooling Fan Not Running” in this section.

### REQUIREMENTS FOR FIELD RESOLUTION

- DOCUMENTATION
  N/A
- TAG 11
- PART NUMBERS
  U.S. - 600K59933
  E.O. - 600K59953
- CUT IN SERIAL NUMBER
  U.S. - 8YG060368 and up
  E.O. - 110907114-1 and up

## Toner Cleaning Auger Bound Up

### PROBLEM

Toner cleaning auger is bound up due to solidified toner.

### CAUSE

Excessive heat build up in the printer.

### SOLUTION

Make sure both cooling fans are functioning properly. If they are not see the article titled “Cooling Fan Not Running” in this section.

### REQUIREMENTS FOR FIELD RESOLUTION

- DOCUMENTATION
- N/A
- TAG 11
- PART NUMBERS
  U.S. - 600K59933
  E.O. - 600K59953
- CUT IN SERIAL NUMBER
  U.S. - 8YG060368 and up
  E.O. - 110907114-1 and up

## LL-22 Caused By Metal Filings

### PROBLEM

LL-22 errors or metal filings are accumulating in the cutter area.

### CAUSE

Metal filings are shorting the Transfer/Detack. These metal filings may be generated in the media transport.

### SOLUTION

Check to see if the transport is the cause of the metal fillings by doing the following:

1. Remove the paper transport.
2. Access the registration roll by removing the springs on the turn baffle and tipping it back.
3. Inspect the registration roll shaft. If it appears that something is scraping it, replace the media transport assembly.

Please report the serial number of any machine that has to have the transport replaced to Tech Support

### REQUIREMENTS FOR FIELD RESOLUTION

- DOCUMENTATION
  N/A
- TAG N/A
- PART NUMBERS
  22K49201 Media Transport Assembly P.L. 8.1 Item 4
- CUT IN SERIAL NUMBER
  N/A

## Intermittent Black Lines Or Background Bands

### PROBLEM

Intermittent broken black lines or background bands in the process direction.

### CAUSE

Developer bias and Transfer voltage set incorrectly at manufacturing.

### SOLUTION

Set the values correctly.

### REQUIREMENTS FOR FIELD RESOLUTION

- DOCUMENTATION
  N/A
- TAG 19
- PART NUMBERS
  N/A
- CUT IN SERIAL NUMBER
  N/A

## Bent Corners (Dog Ears) On Lead Edge Of Narrow Media

### PROBLEM

Bent lead edge corners (dog ears) on “A” (A4) and “B (A3) -short edge feed” size media may occur on some printers. This happens primarily when close to the end of the media roll when the curl is the worst.

### CAUSE

This problem occurs in the media transport at the point where the media turns and meets the registration roll shaft. Because there is no registration feed roll in this area of the transport. the media catches the edge of the inner extrusion of the media transport.

### SOLUTION

( Figure 1): Order a dog ear repair kit 600K62600, remove the transport and install mylar strips in the area shown in the illustration.

The registration roll and transport design was changed to add an additional set of registration feed rolls ( TAG 12). Some early machine with this tag did not get marked on the tag matrix. This transport may be identified in the following manner, without removing it from the machine:

1. Open the cutter drawer .
2. Check the left side of the transport. If the label is marked “12 roll” this kit is not needed and something else in the media path is causing the problem.

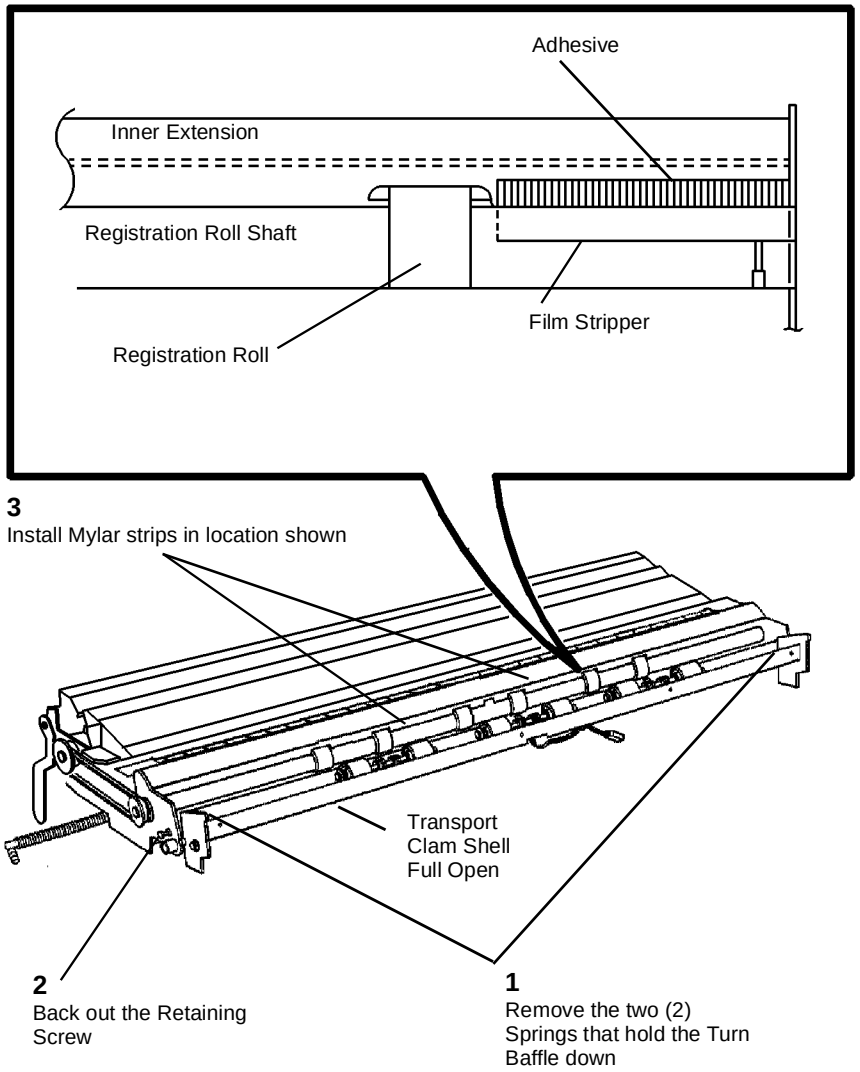


**Figure 1 Installation of Mylar Strips**

## Problems With Film Stacking

### PROBLEM

When running multiple prints on film, stacking problems may occur.

### CAUSE

When film exits the machine it is very hot and flexible. After the first film print exits the machine, the film that follows may stick to the previous print. This can cause the film to roll up and block the exit.

### SOLUTION

Adjust diagnostic code 0760 to increase the delay between film copies. This will impact throughput of film only.

### REQUIREMENTS FOR FIELD RESOLUTION

- DOCUMENTATION
  N/A
- TAG 9, TAG 11
- PART NUMBERS
  N/A
- CUT IN SERIAL NUMBER
  N/A

## Low Solid Area Density At Install

### PROBLEM

At install it is difficult to attain 1.0 solid area density.

### CAUSE

This symptom is a developer/toner materials package phenomena that has to do with aging.

### SOLUTION

There is no fix for this problem other than to allow the material to age. After 500 to 1000 linear feet the solid area coverage will recover.

***NOTE: DO NOT USE 09 21 6** to adjust image density!!! Adjust only the image density in diagnostic 09 21 4.*

### REQUIREMENTS FOR FIELD RESOLUTION

- DOCUMENTATION
  N/A
- TAG N/A
- PART NUMBERS
  N/A
- CUT IN SERIAL NUMBER
  N/A

## Intermittent Extra Print

### PROBLEM

Intermittently an extra print is printed. The extra print will be partially the requested print and partially one of the internal test patterns.

### CAUSE

Electrical noise that is being injected into the system is causing the system to print this strange print. This noise is caused by either a contaminated scorotron that is arcing or the scorotron leads breaking down. No error code is produced but the system prints a second print correctly because it knows the first one failed.

### SOLUTION

Clean the suspect scorotron and grid. Replace the grid or pins if required. Replace the Scorotron endblock and leads by installing a scorotron end block kit (600K58730)

### REQUIREMENTS FOR FIELD RESOLUTION

- DOCUMENTATION
  N/A
- TAG N/A
- PART NUMBERS
  600K58730 Scorotron Endblock Kit
- CUT IN SERIAL NUMBER
  N/A

## Loud Noise From HVPS

### PROBLEM

Loud noise or squeal coming from the High Voltage Power Supply.

### CAUSE

Poor connection between the High Voltage Power Supply and the Charge Scorotron.

### SOLUTION

Check the Charge Scorotron leads for an open or poor connection. If damaged repair or replace the Charge Leads (part of the Charge Scorotron Endblock Kit)

### REQUIREMENTS FOR FIELD RESOLUTION

- DOCUMENTATION
  N/A
- TAG N/A
- PART NUMBERS
  600K58730 Scorotron Endblock Kit
- CUT IN SERIAL NUMBER
  N/A

## Troubleshooting Photoreceptor Drive Problems

### PROBLEM

Photoreceptor drive may stall causing blank prints

### CAUSE

There is more than one cause of this problem, other than hard failure. Check the items listed below before troubleshooting the circuit or replacing components:

### SOLUTION

***NOTE:*** *The photoreceptor drive circuit has an overcurrent protection built into it. If the circuit detects no drum drive or high current the drive system will shut down.* ***When this occurs, the printer must be powered off then on to reset the circuit.***

1. A poorly lubricated cleaning blade and photoreceptor can cause photoreceptor stalls or squealing. Use the **double buff** procedure when servicing the cleaning components.

***NOTE:*** *Excessive zinc stearate can cause print quality problems but the photoreceptor will recover back to normal performance.*

2. Ensure that the screws that hold the scorotron in place are fully seated . If they are not they can touch the ends of the photoreceptor and stall it.
3. Ensure that the plastic “skis” that are located on the top of the turn baffle do not contact the photoreceptor. To check this remove the developer housing and place a piece of paper between the “skis” and the photoreceptor. The paper should pass freely between them. If it does not perform the transport adjustment.
4. Ensure that the Photoreceptor drive coupling is securely fastened to the motor and drive shaft. Rotate the shaft, if the coupling appears to “wobble” replace it.

### REQUIREMENTS FOR FIELD RESOLUTION

- DOCUMENTATION
  N/A
- TAG N/A
- PART NUMBERS
  N/A
- CUT IN SERIAL NUMBER
  N/A

## Photoreceptor Damage

### PROBLEM

Scoring or scraping of the photoreceptor is occurring during normal operation.

### CAUSE

There is more than one possible cause of this problem. These causes are listed below.

### SOLUTION

1. Ensure that the plastic “skis” are still in position on the top of the turn baffle.
2. Ensure that the plastic “skis” that are located on the outside top of the turn baffle do not contact the photoreceptor. To check this remove the developer housing and place a piece of paper between the “skis” and the photoreceptor. The paper should pass freely between them. If it does not perform the transport adjustment.
3. Inspect the DRS rollers on the developer housing. These rollers are constructed from a bearing with a plastic sleeve on the outside. Ensure that the plastic sleeve is not damaged or missing. Replace rollers as required.

## Image Displacement (Rollover) On Vellum Or Film

### PROBLEM

( Figure 1): Image displacement (rollover).

### CAUSE

There are many factors that can aggravate this problem but the main cause is the print buckling and pulling away from the Heat Roll between the fuser nip and the exit. At this point in time, due the toner pile height, not all of the image is fused and the top surface of the image stays with the Heat Roll. The buckle causes the media to move slightly slower than the Heat Roll, so when the Heat Roll and the media make contact again the image is placed slightly ahead of where it should be.

### SOLUTION

Check the following:

- Ensure that the image density is set within machine specifications. If the density is set too high it will make the problem worse.
- Slightly increase the fuser temperature. More heat will help ensure that the image will fuse fully.
- Replace the fabric guide and if required the Heat Roll.

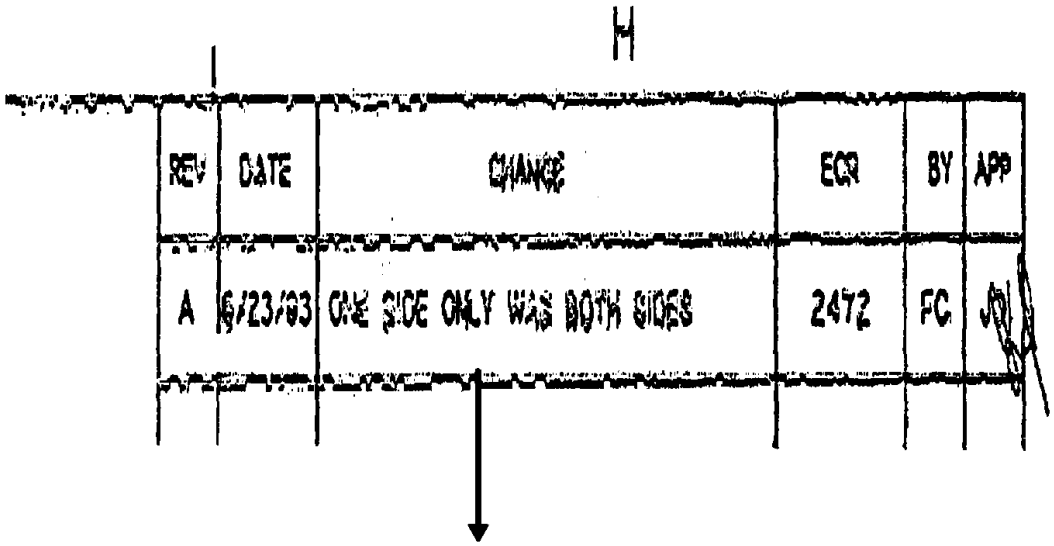


**Figure 1 Rollover**

# Installation Procedure

## Prepare to Install the Printer

**CAUTION**

*Before installing the Printer, check for the correct voltage, polarity, and the grounding of the AC outlet that is provided by the customer. Use the Digital Multimeter. Incorrect voltage applied to the Printer could result in poor performance or damage to the Printer.*

***NOTE:*** *The power line outlet must be a 20 amp dedicated line (wired directly to the circuit breaker panel) with no shared neutral and a different phase from the lighting circuits.*

**CAUTION**

*If the supply AC voltage specifications are not met, the AC outlet may be wired or grounded incorrectly. Inform the customer and request that a licensed electrician correct the problem. DO NOT attempt to make the correction yourself.*

***NOTE:*** *The Power Cord is the disconnect device for this equipment. Ensure that the installation is near the outlet and is easily accessible.*

1. ( Figure 1): Check the Ground and AC voltages.

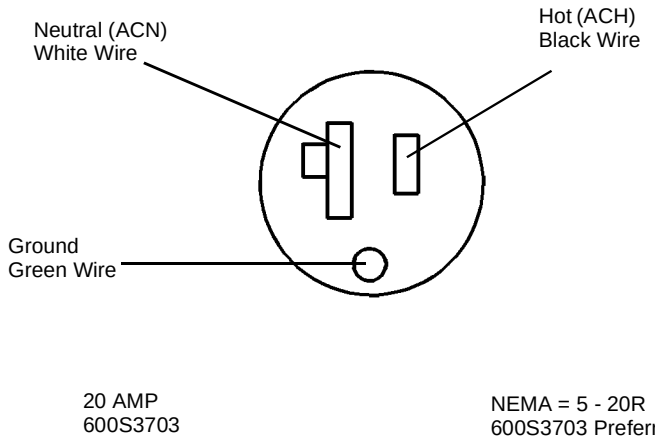


**Figure 1 Checking the Ground and AC voltages**

On **60 Hz Printers**, perform the following:

a. Check for 105-125 VAC between AC Hot and AC Neutral.
b. Check for 105-125 VAC between AC Hot and AC ground.
c. Check for less than 2 VAC between AC Neutral and ground.

On **50 Hz Printers**, perform the following:

a. Check for 220-240 VAC between AC Hot and AC Neutral.
b. Check for 220-240 VAC between AC Hot and AC ground.
c. Check for less than 2 VAC between AC Neutral and ground.

## Floor Space Requirements

**WARNING**

**This product will produce ozone during operation. The ozone that is produced is dependent on the print volume and is heavier than air. Providing the correct environmental parameters as specified in Xerox installation procedures will ensure that concentration levels meet safe limits**

- The minimum space requirement is 116.75 inches (292 cm) x 85 inches (212.5 cm).

**USO Only**: If additional information concerning ozone is needed, request the Xerox publication **600P83222**, Ozone by calling 1-800-828-6571.

( Figure 2): IOT Dimensions.

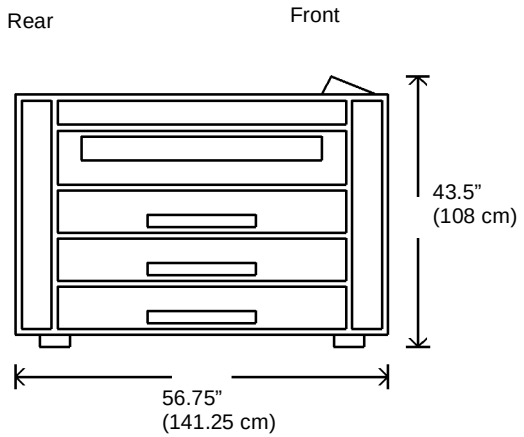


**Figure 2 IOT Front Dimensions**

( Figure 3): Minimum Space Requirements.

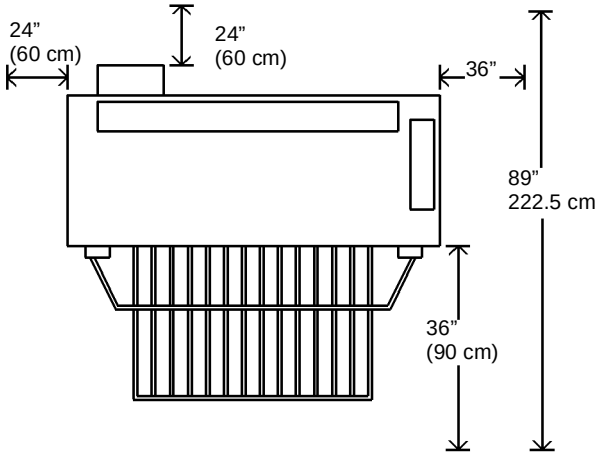


**Figure 3 Minimum Space Requirements**

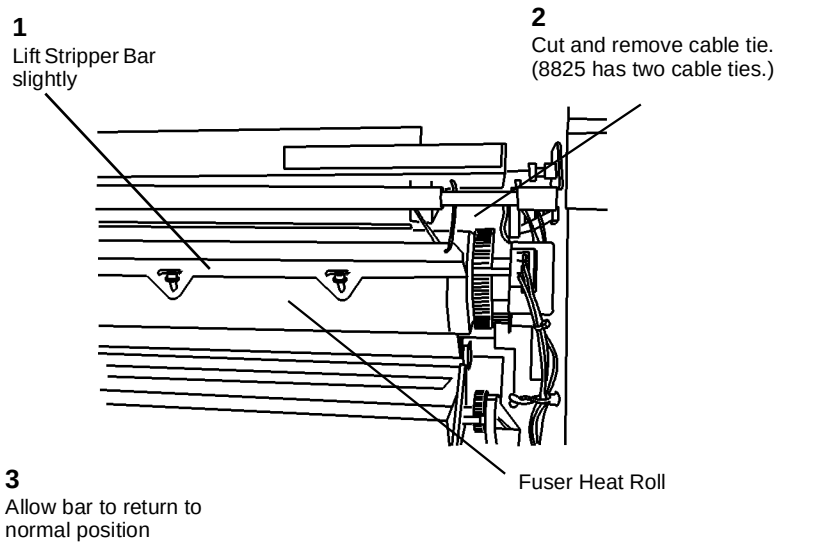


**Figure 4 Removing the Cable Tie**

## Install the Printer

1. Prepare to remove the internal packing material from the Printer.
   a. Remove all external shipping tape.
   b. Loosen the two locking screws and open the Rear Door.
   c. Raise and latch the Top Cover.
   d. Lower the Media Transport Cover.
   e. Hold open the Developer Module Door while lifting and removing the Developer Module Side Cover.
2. ( Figure 4): Remove the cable tie from the Stripper Finger Assembly.
3. Close the Media Transport Cover.
4. Open the Media Drawers and remove the packaging material from the Media Tubes. (8830 has 3 Media Drawers; 8825 has either 1 or 2 Media Drawers.)
5. Remove the Scorotron from the Media Drawer and carefully remove the packing material from the Scorotron.
6. Lift and rotate the Image Module to the Service Position. Install the Scorotron on the Image Bar, making sure that the connector end of the Scorotron is to the left (machine rear).
7. Attach the connectors to the Scorotron, taking care to join like-sized connectors.
8. ( Figure 5): Remove the shipping pads located near the ends of the Image Module.

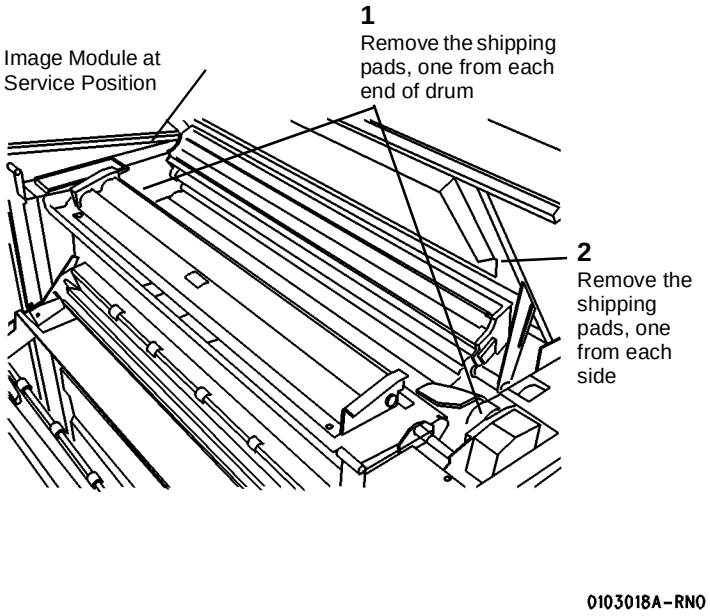


**Figure 5 Removing the Shipping Pads**

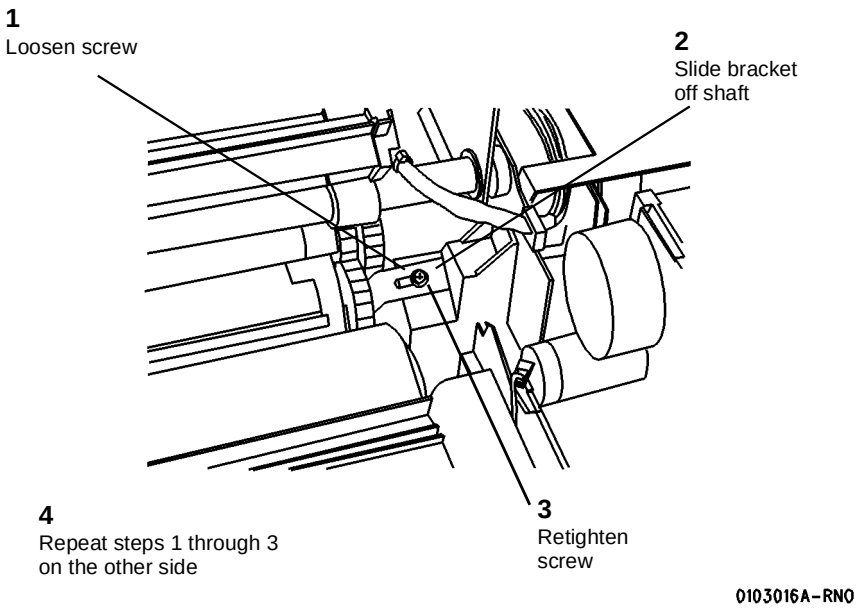


**Figure 6 Disengaging the Shipping Brackets**

9. ( Figure 6): Disengage the Developer Module shipping brackets.
10. Close the Image Module and the Top Cover.
11. Lift open the Developer Module door, located on the top right side of the printer.
12. Remove the Toner Cartridge from the Developer Module.
13. ( Figure 7 ): Prepare to remove the Developer Module.

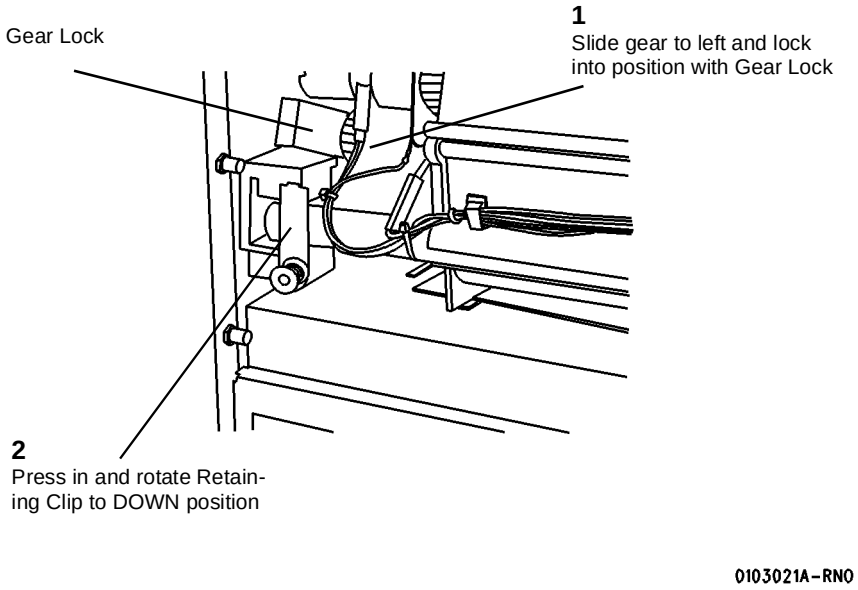


**Figure 7 Removing the Developer Module**

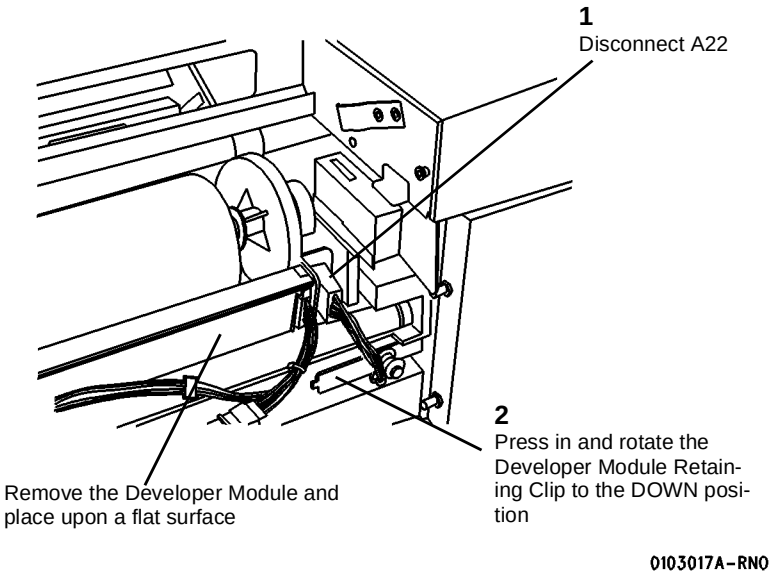


**Figure 8 Preparing to Remove the Developer Module**

14. ( Figure 8 ): Remove the Developer Module.

15. ( Figure 9): Remove the Sump Shield.

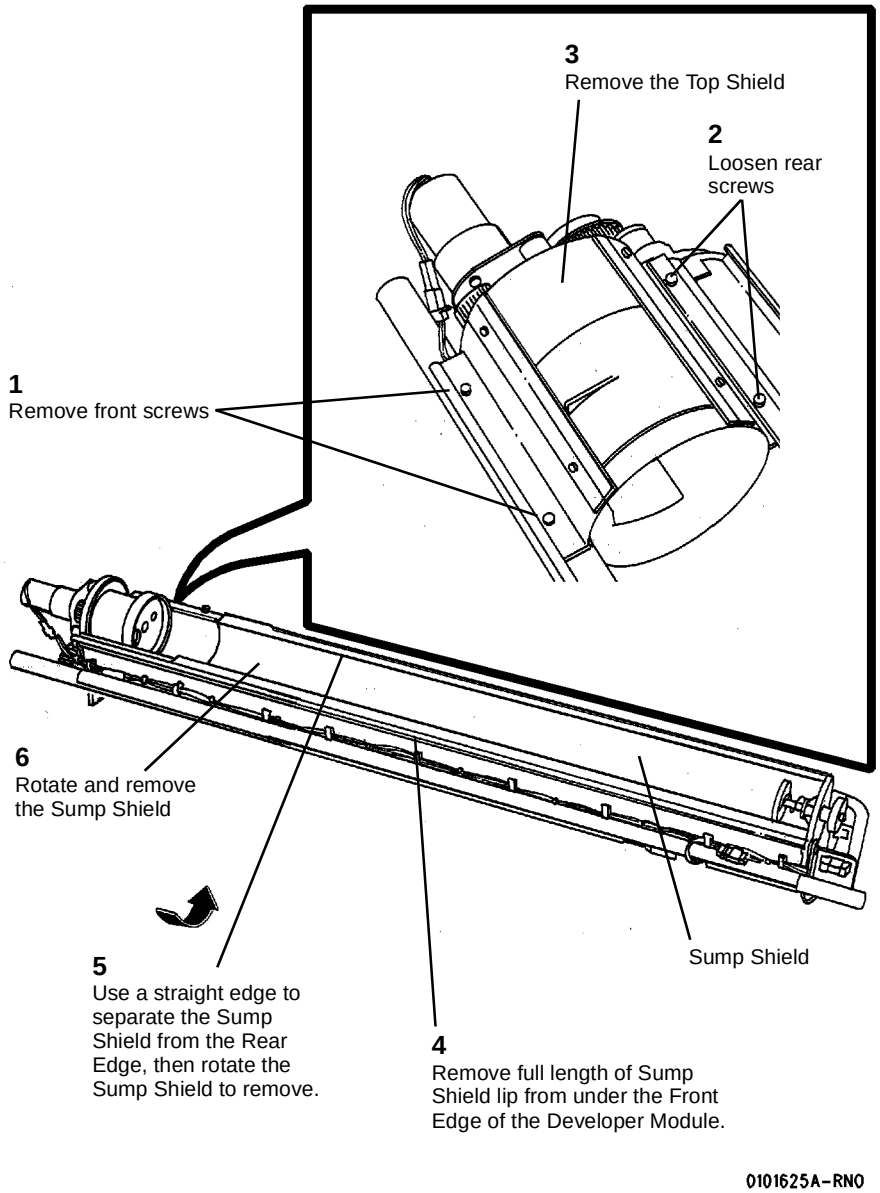


**Figure 9 Removing the Sump Shield**

16. Remove the bottle of Developer Material from the Supply Kit.
17. ( Figure 10): Install the Developer Material evenly along the entire length of the augers.

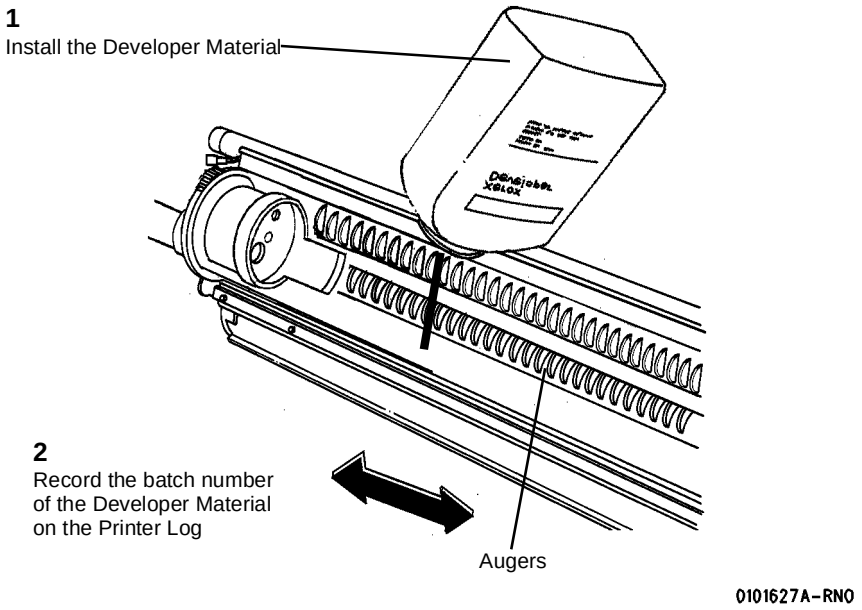


**Figure 10 Installing the Developer Material**

18. ( Figure 11): Reinstall the Sump Shield, rear edge first.

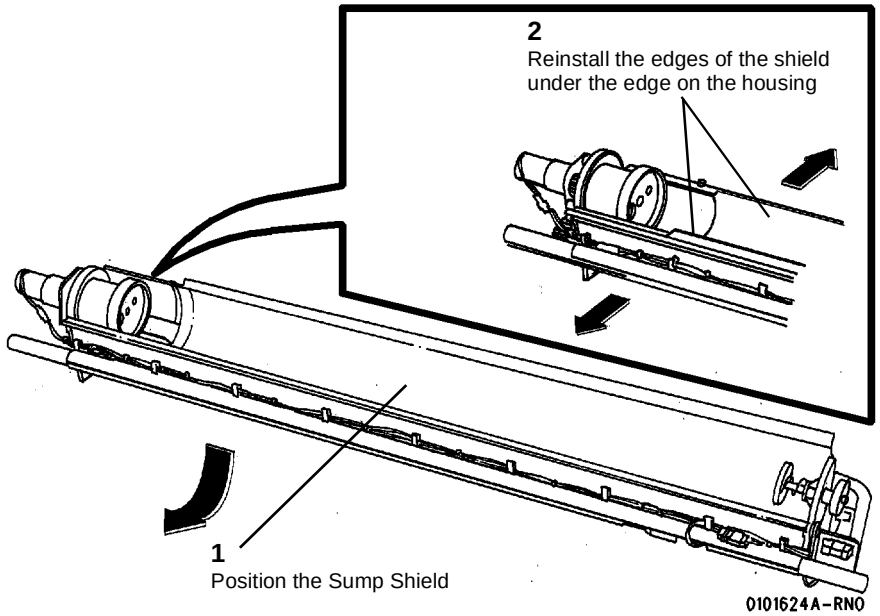


**Figure 11 Reinstalling the Sump Shield**

19. ( Figure 12): Reinstall the Top Shield, rear edge first.

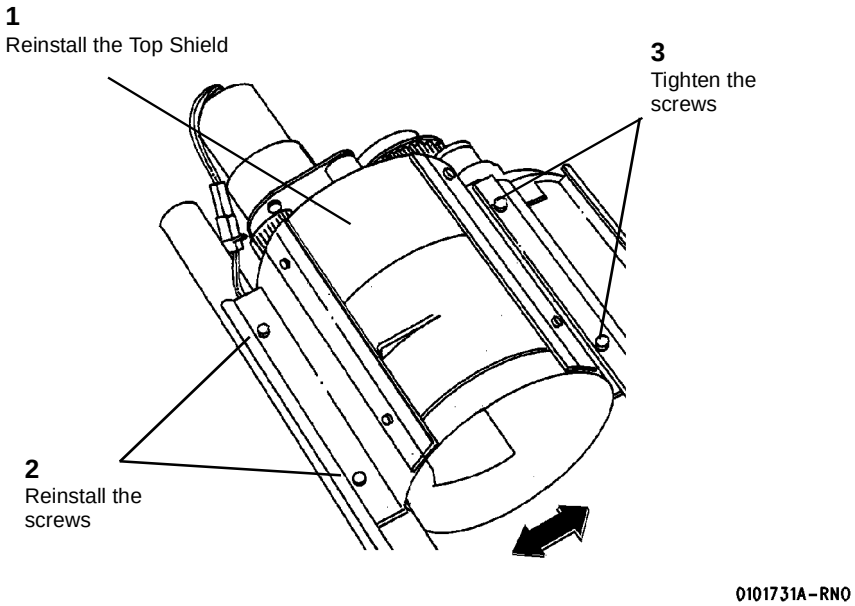


**Figure 12 Reinstalling the Top Shield**

**CAUTION**

*Ensure that the Developer Module is kept close to the Printer frame during reinstallation in order to avoid damage to the Toner Dispenser Motor.*

20. (Figure 13 ): Reinstall the Developer Module.

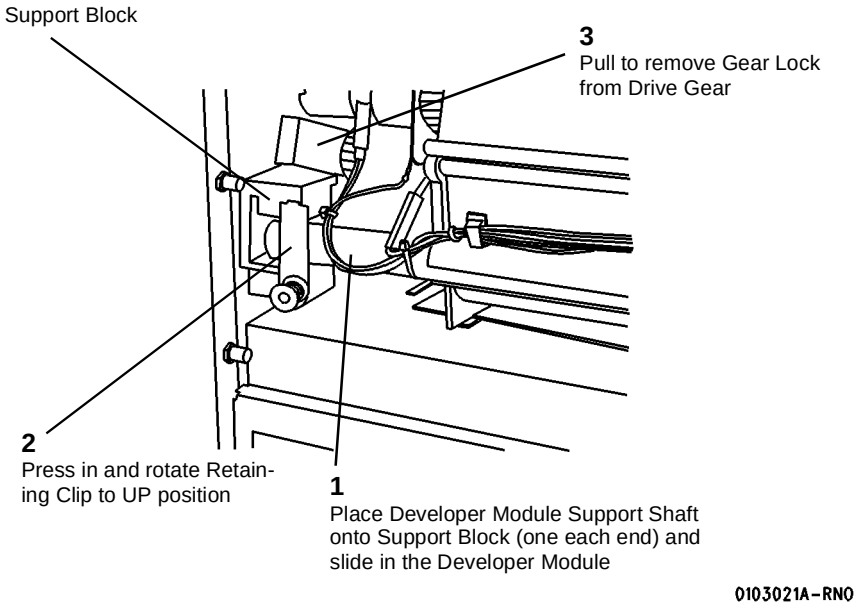


**Figure 13 Reinstalling the Developer Module**

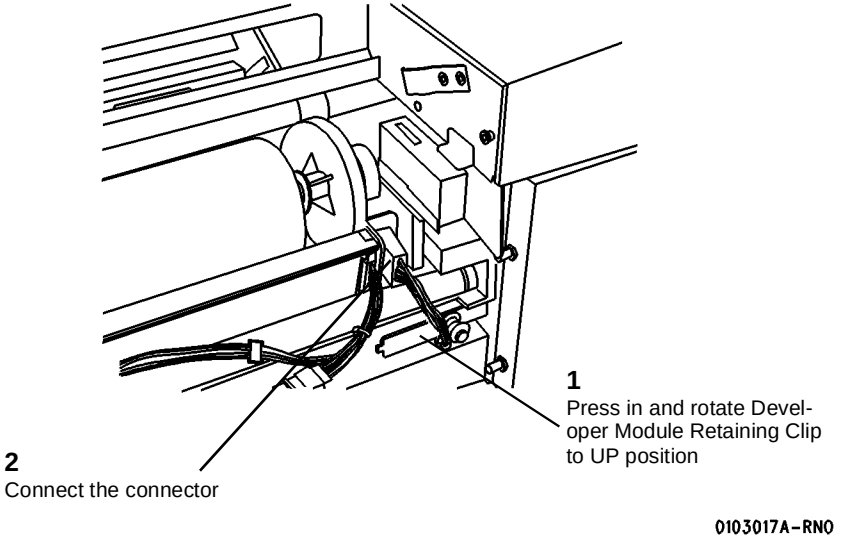


**Figure 14 Reinstalling the Developer Module**

21. (Figure 14 ): Reinstall the Developer Module.

22. (Figure 15 ): Reinstall the Toner Cartridge.

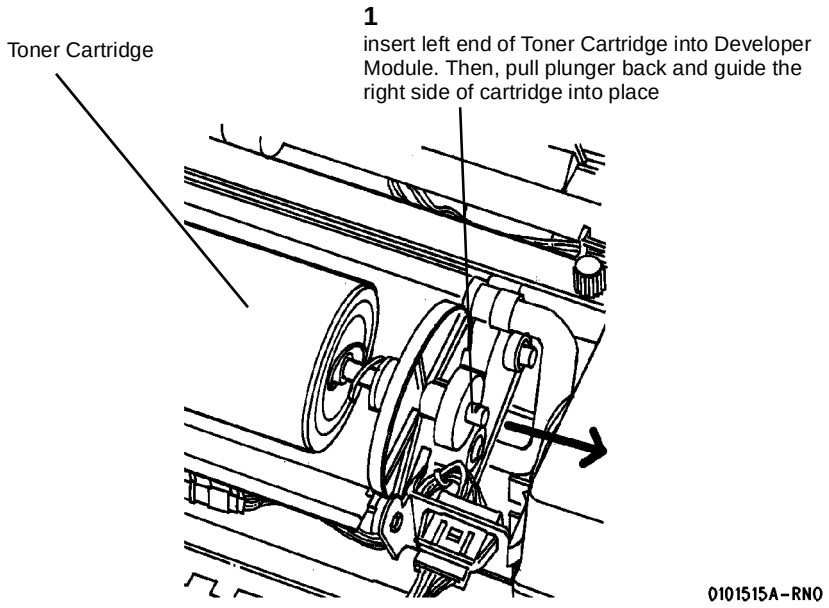


**Figure 15 Reinstalling the Toner Cartridge**

23. Figure 16 : Complete the Toner Cartridge installation.

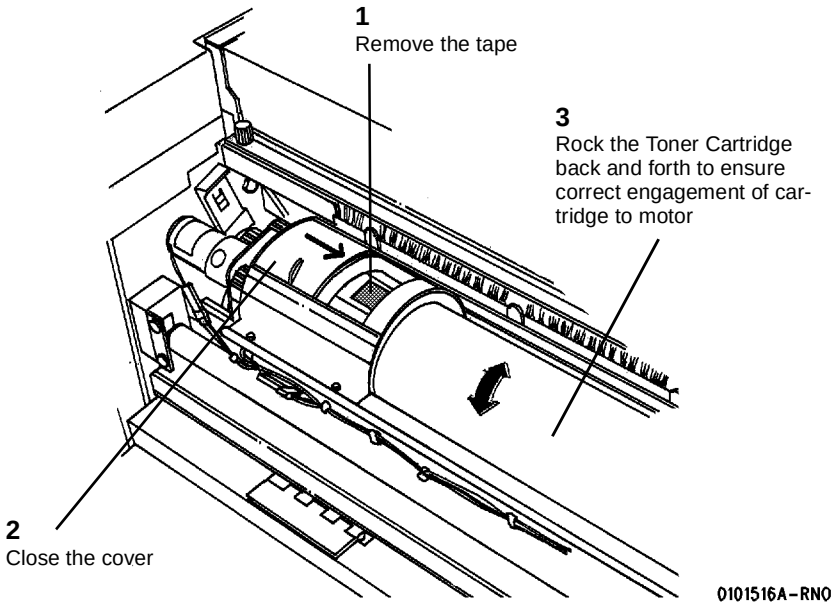


**Figure 16 Completing the Toner Cartridge installation**

24. Close the Developer Module Cover.
25. Raise the Printer Top Cover.
26. Raise and hold the Developer Module Cover while reinstalling the Developer Module Side Cover.
27. Figure 17 : Prepare to level the Printer. Rotate the leveling bolts (located inside the front and rear doors) fully counterclockwise.

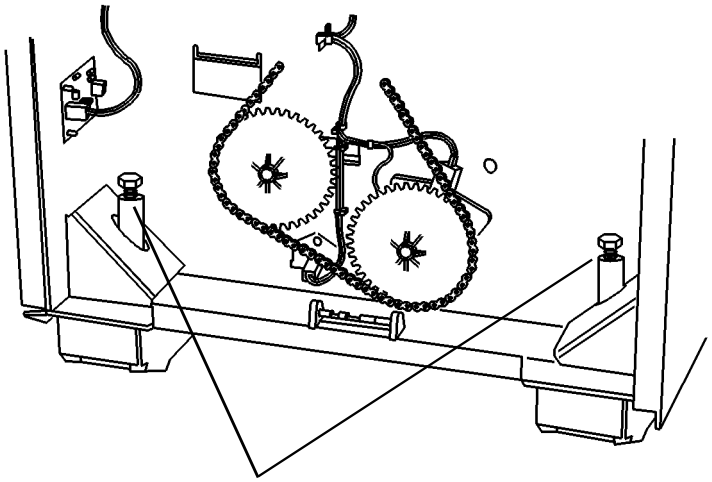


**Figure 17 Preparing to Level the Printer**

28. Figure 18: Check the level of the Printer.

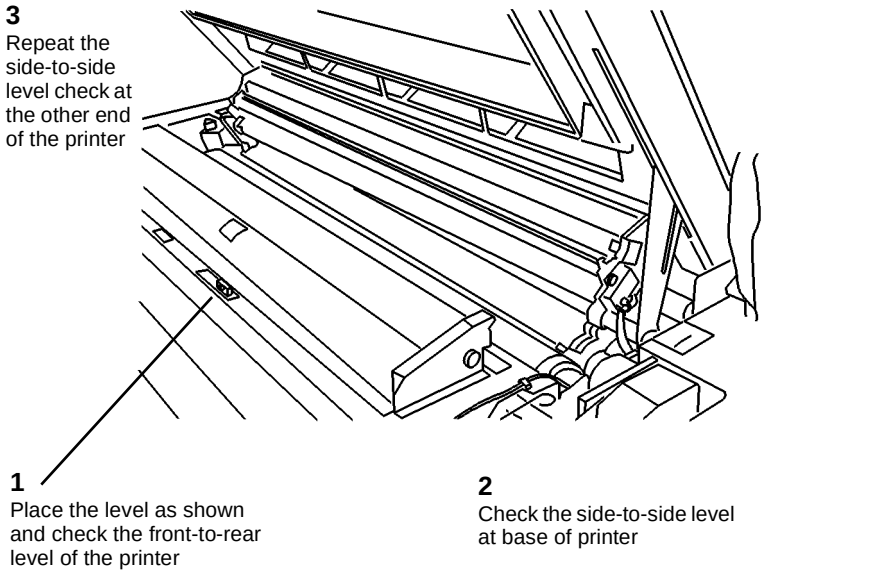


**Figure 18 Checking the Level of Printer**

***NOTE:*** *To ensure that the Printer frame is not twisted, use a level to perform the side-to-side level check on both end frames.*

***NOTE:*** *Adjust the end that is farthest out of level first.*

29. Figure 19: Adjust the side-to-side level of the Printer.

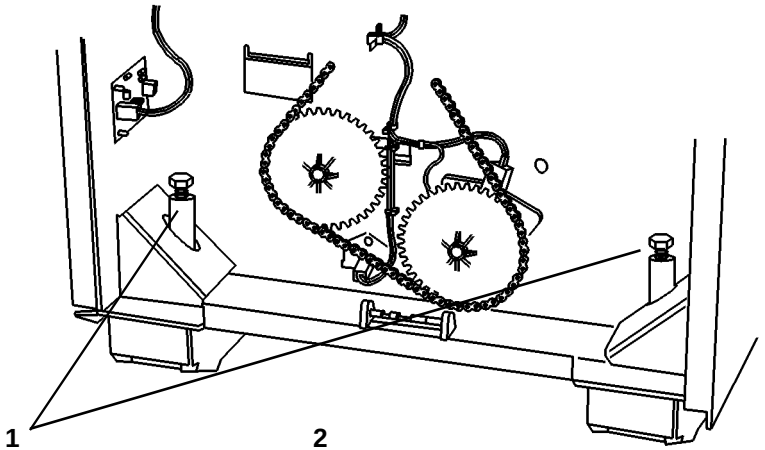


**Figure 19 Adjusting the side-to-side level**

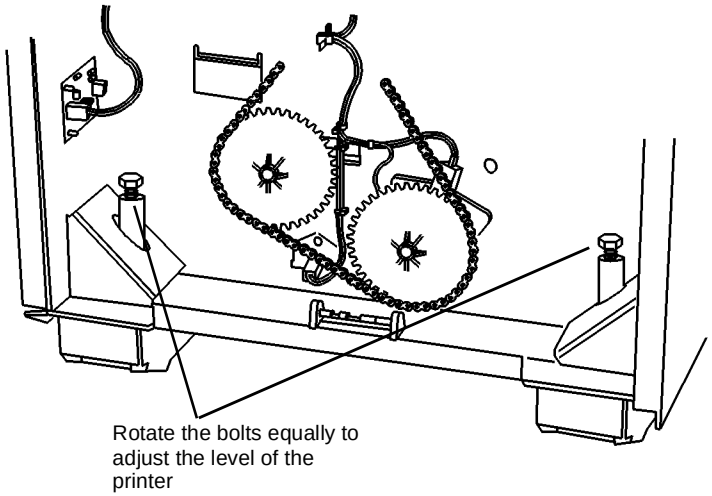


**Figure 20 Adjusting the Front-to-Rear Level of Printer**

30. Figure 20: Adjust the front-to-rear level of the Printer.

31. Figure 21: Check the level of the printer.

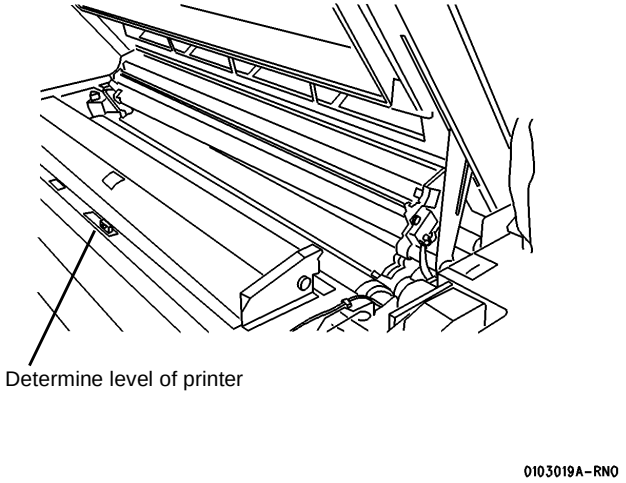


**Figure 21 Checking and Adjusting the Printer Level**

32. Repeat the Printer leveling (Steps 27 through 30) until the Printer is level.

33. Lock the printer casters.
34. Close the Top Cover.
35. Close the Rear Door and tighten the locking screw.
36. Install a roll of 36 inch (A0) Bond media in Roll 1 Media Supply. Refer to the User Guide as required.
37. Install the Second Language EPROM on the Main PWB (if required).
38. Install the Catch Tray or Folder. Go to the particular Installation Procedure of that service manual.
39. If the printer is being installed as part of the 8825/8830 DDS, proceed to the Functional Checks. Otherwise, continue on with the next step.

***NOTE:*** *The printer comes with either a plain cover to attach to the right side of the printer, or with the Controller (which covers the same area).*

40. If the Printer you are installing does not have the Controller (just a plain cover), perform the following:
    a. Attach the ribbon cable affixed to the Side Cover to A1P3 on the Main PWB.
    b. Place the Side Cover into the groove at the bottom of the Printer and secure it with the two screws provided.
41. If the Printer you are installing has the Controller, perform the following:
    a. Connect the Controller ribbon cable to J307B on the Main PWB.
    b. Connect A1J3 on the controller panel to A1P3 on the Main PWB.
    c. Attach the Controller to the Printer by sliding it into the groove at the bottom of the Printer and secure it with the two screws provided.
42. Provide following to the Systems Administrator (required for obtaining the software keys for options):
    - Printer serial number
    - Controller serial number (if Controller present)
    - Hardware address of the Ethernet Advanced Port (if Controller present)

## Functional Checks

1. Check to ensure that the latest software is available and compatible for installation on the 8825/8830 Printer. Reference the Configuration Matrix Technical Services Bulletin (TSB) for the 8825/8830 Printer, or reference the Bulletin Board System (BBS).
2. Connect the Power Cord.
3. Switch on the Controller and the Printer. Then enter the Diagnostic mode.

**CAUTION**

*When starting to operate the Printer, do not run 9-21-6. The Developer Material in this machine has already been initialized. There is no need to run this program again.*

4. Go to the Service Manual and perform the following adjustments.
    - Country configuration (ADJ 3.2)
    - Initialize the Web Oiler [1030]
    - Vertical Magnification (ADJ 8.1)
    - Lead Edge Registration (ADJ 8.2)
    - Cut Length (ADJ 8.3)
    - Electrostatic Series (ADJ 9.2)

***NOTE:*** *New developer material requires that it be run for 500 to 1500 linear meters (1524 to 4572 linear feet) in order to break-in the developer material. As the developer material approaches break-in, the image density will increase. Check the image density. If the image density is at 1.3 or greater, reduce it to 1.2. If the image density is below 1.0, increase it to 1.0.*

5. Make three test prints using [9-55-5] and [9-55-7].
6. Check the print quality. Go to Print Quality Initialization Procedure in Section 3 of this Service Manual.
7. If there is a controller installed, run a test print from the controller (special test).
8. Exit the Diagnostic mode.
9. Inform the operator that the following adjustments are Operator Adjustments and can be changed to fit individual needs. Refer to the User Guide and demonstrate the following adjustments.
    - Power Saver Mode (EO: Low Power Mode)
    - Standby Mode
    - Timers
    - Audible indicators
    - Print density
    - Controller (if present): Settings, Menu, Printing a Test Pattern
10. Place a print of the Configuration Sheet inside the Front Door.
11. (Figure 22): Read the number of prints made on the Media Counter.

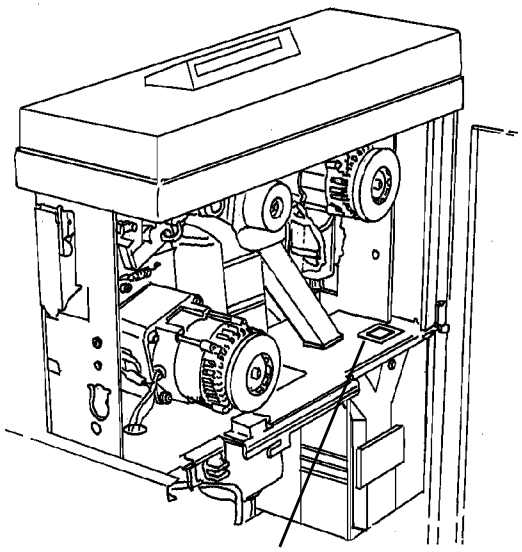


**Figure 22 Media Counter Location**

12. Figure 23): Record the Media Counter readings onto the Service Call Report. Record and report any accessory Serial Numbers (i.e., Finisher, Controller).
13. Separate the First Call Report card from the Installation Quality Report card and insert the First Call Report card into the Machine Log.

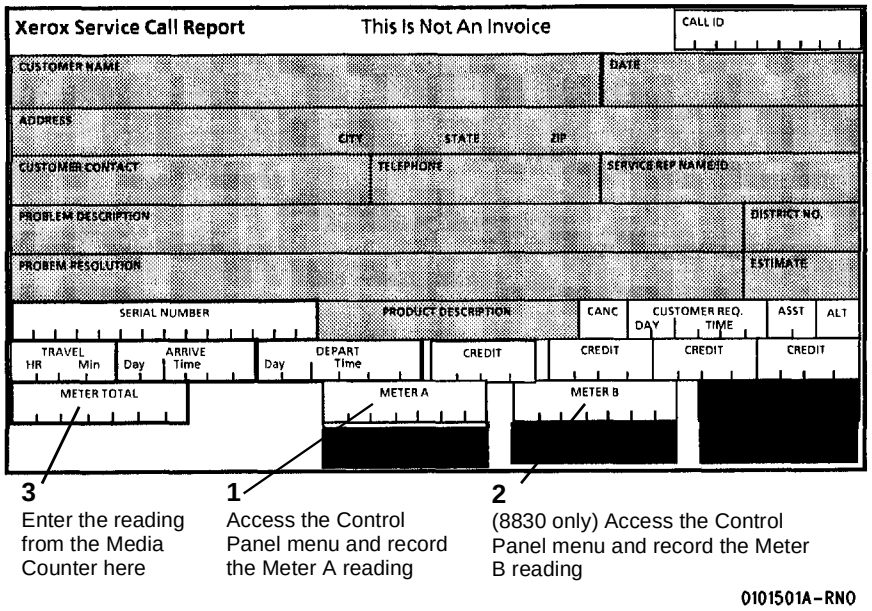


**Figure 23 Recording the Print Count Readings**

14. Record the following on the Printer Installation Quality Report card:
    - Print count readings
      - 8830: Media Counter, Meter A and Meter B
      - 8825 Media Counter, Meter A
    - Printer serial number
    - Installation date
    - Comments
15. Mail the Printer Installation Quality Report Card.

## Product Demonstration

**CAUTION**

***50 Hz machines only:**. Do not run program 3-60-3 as this will cause all settings on the Printer to be lost.*

To demonstrate the capabilities of the Printer, refer to the User Guide. Perform the following procedures to train an operator.

1. Getting to know your Printer
2. Control Console
3. Loading the media
4. Making prints using roll media
5. Adding Toner and how to clear the J1 Status Code
6. Problem solving status codes
7. Clearing the Printer

# Installation Checklist

## Site Preparation

1. Supply voltage check
2. Space requirements

## Installation

1. Remove the packing material
2. Remove the Toner Cartridge
3. Adding Developer Material
4. Install the Toner Cartridge
5. Level the Printer
6. **EO Only**: Set the 220/240 switch
7. Enable the correct language

## Functional Check

**CAUTION**

*When starting to operate the Printer, do not run 9-21-6. The Developer Material in this machine has already been initialized. There is no need to run this program again.*

1. Switch on the Printer and allow the Printer to warm up.
2. Set the Country Configuration ( ADJ 3.2).
3. Initialize the Web Oiler [1030].
4. Set the Vertical Magnification ( ADJ 8.1).
5. Set the Lead Edge Registration ( ADJ 8.2).
6. Set the Cut Length ( ADJ 8.3).
7. Perform the Electrostatic Series ( ADJ 9.2).

   ***NOTE:*** *New developer material requires that it be run for 500 to 1500 linear feet (1524 to 4572 linear meters) in order to break-in the developer material. As the developer material approaches break-in, the image density will increase. Check the image density. If the image density is at 1.3 or greater, reduce it to 1.2. If the image density is below 1.0, increase it to 1.0.*

8. Perform the Image Density adjustment. (ADJ 9.3).
9. Make three test prints using [9-55-5] and [9-55-7].
10. Check the print quality using Section 3 of this Service Manual.
11. Check the operator adjustments.

## Product Demonstration Checklist

1. ON/OFF switch, Print Count Meter, and serial number plate
2. Control Console
3. Replacing the Toner Cartridge
4. Problem solving status codes
5. Clearing the Printer

# Removal Procedure

## Purpose

The purpose is to repack the Printer and the Controller (if present) for removal by Delivery / Removal Carriers.

**Printer Repack Kit 600K59540**

**Kit Contents**

Inspect the shipment for the following items:

- Poly Tape
- Bubble Pack
- Foam Pads (2
- Cable Ties (2)
- Tape
- Box
- Bag (Poly)
- Bag (36 x 36)
- Bag (Jiffy)
- Photoreceptor End Caps (L & R)

**Controller Repack Kit 673K34340**

**Kit Contents**

Inspect the shipment for the following items:

- Tape
- Box
- Bag (Anti-static)
- End Caps (Top & Bottom)

## Preparation

1. Switch off the Main Power Switch and disconnect the Power Cord.
2. Remove all rolls of media and leave them with the customer. Tape down the Roll Support Tubes in their respective Drawer.
3. Remove the Power Cord and place it in a Media Supply Drawer.
4. Remove the Catch Tray and the Catch Tray Supports.
5. Place the Catch Tray into the (36 x 36)bag and secure the bag with tape in three places. Put the bag in the box and seal the flaps with tape.
6. Put the two Catch Tray Supports into the Poly Bag, close the flap, and secure the bag with tape.
7. Put the bag into the Jiffy bag, close the flap, and secure the bag with tape in three places.
8. If the Printer you are removing has the Controller, perform the following:
   a. Remove the Controller by removing the two screws and lifting it off the groove at the bottom of the of Printer.
   b. Disconnect A1J3 on the Controller panel from A1P3 on the Main PWB.
   c. Disconnect the Controller ribbon cable from J307B on the Main PWB.
   d. Place the Controller in the Anti-static Bag, install the Top and Bottom End Caps, and place the assembly into the box.
   e. Secure the box with tape.
9. Using the Developer Material procedure ( REP 9.7), remove the Developer Material.
10. Reassemble the Developer Module and reinstall it into the Printer. Engage the Gear Lock.
11. Reinstall the Developer Module Side Cover.
12. Unlock the casters.
13. Open the Front Door and the Rear Door.
14. ( Figure 1): Raise the leveling bolts.

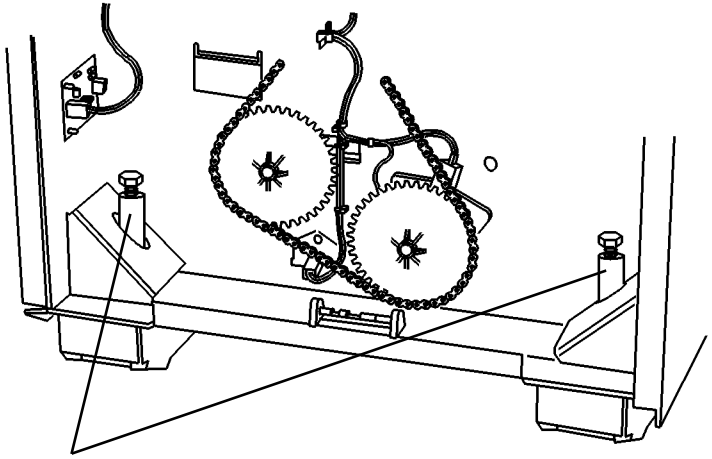


**Figure 1 Raising the Leveling Bolts**

15. Raise and latch the Top Cover.
16. ( Figure 2): Raise the Image Module to engage the Developer Module shipping brackets .

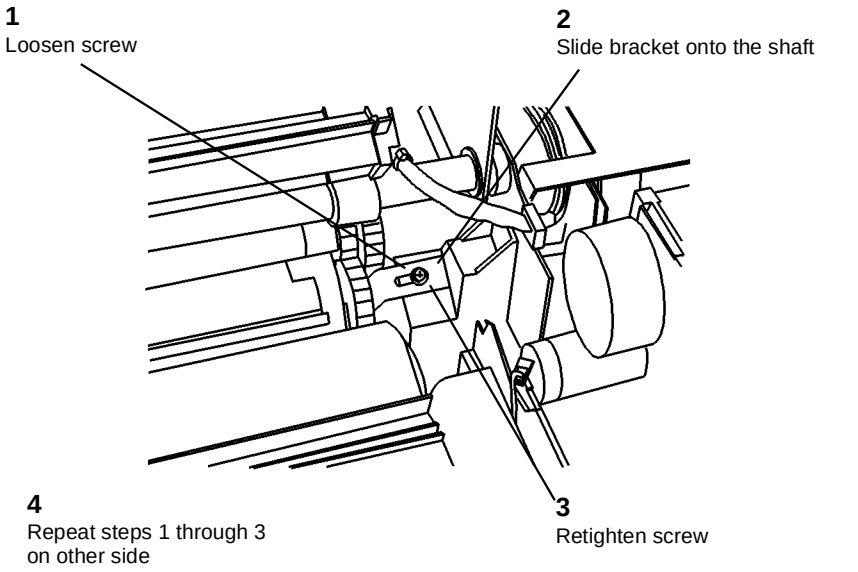


**Figure 2 Engaging the Shipping Brackets**

17. ( Figure 3): Install the shipping pads.

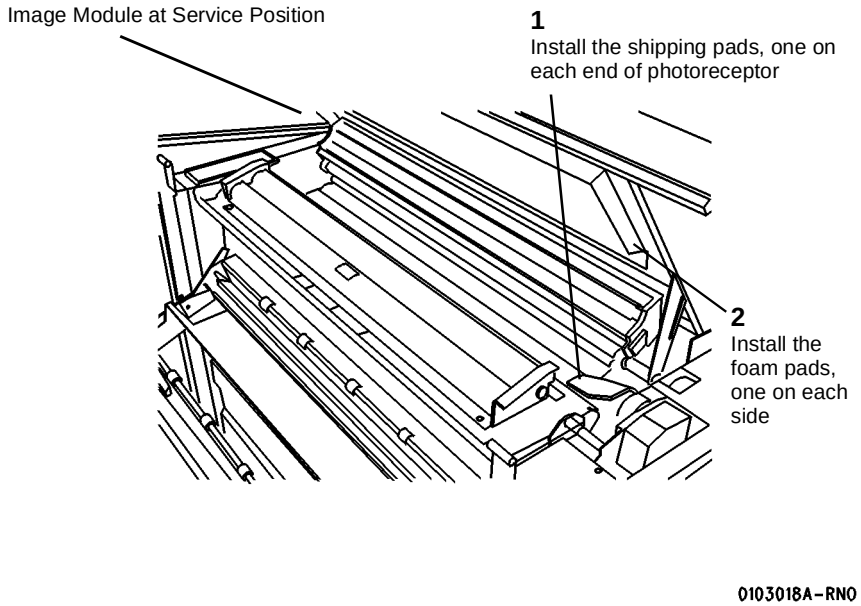


**Figure 3 Installing the Shipping Pads**

18. Remove the Charge Scorotron Assembly ( REP 9.8), wrap the assembly in bubble pack, and place it in a Media Supply Drawer.
19. ( Figure 4): Open the Media Transport Cover and secure the Stripper Finger Assembly with a cable tie.

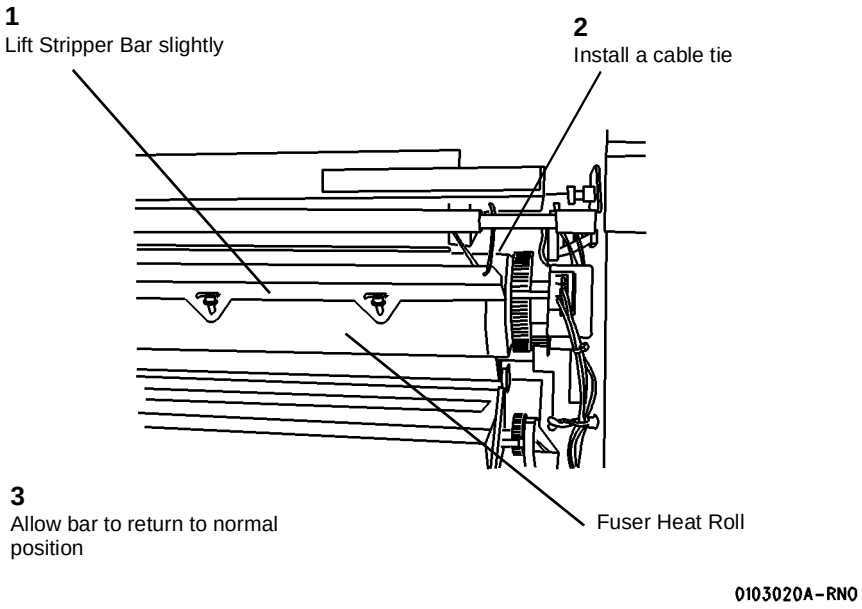


**Figure 4 Installing the Cable Tie**

# General Tools and Supplies (NACO)

**Table 1 Supplies**

| Supplies | |
|---|---|
| **Description** | **Part** |
| Service Manual Binder | 600P88124 |

**Table 2 Tools**

| Tools | |
|---|---|
| **Description** | **Part** |
| Basic Multinational Tool Kit | 600T1835 |
| Supplemental Tool Kit | 600T1837 |
| Metric Supplemental Tool Kit | 600T1836 |
| Digital Multimeter | 600T2020 |
| DMM Test Lead Kit | 600T1923 |
| Test Leads (required for 600T2020) | 600T1660 |
| Red Adapter Plug | 499T9567 |
| Black Adapter Plug | 499T9568 |
| Electrometer | 600T1620 |
| Temperature Probe Set (Probe and Sensor) | 499T9570 |
| Thermal Sensor (straight) | 499T9572 |
| Light Shield | 600T1198 |
| Stackable Jumper Lead (Electrometer) | 600T1652 |
| Interlock Tool | 600T91616 |
| Vacuum Cleaner | 600T1820 |
| Vacuum Cleaner Bags (10) | 93E3270 |
| Vacuum Cleaner Filter Module | 600T1832 |
| Electrometer Probe Wing | 600T1728 |
| Screwdriver Blade (6” x 3/16”) | 600T40203 |
| Pocket Screwdriver | 600T40205 |
| 5.5 mm Wrench | 600T40501 |
| 7 mm Wrench | 600T40502 |
| 5.5 mm Socket | 600T40701 |
| 7 mm Socket | 600T40702 |
| Longnose Pliers | 600T40901 |
| Diagonal Cutting Pliers | 600T40903 |
| Metric Hex Key Set | 600T41101 |
| Retaining Ring Pliers | 600T41401 |
| 150 mm Rule | 600T41503 |
| 2 Meter Tape Measure | 600T41505 |
| Line Level | 600T41510 |
| Round File, 6 inch | 600T41801 |
| Flat File, 6 inch | 600T41802 |

**Table 2 Tools**

| | |
|---|---|
| Cleaning Brush | 600T41901 |
| Scribing Tool | 600T41903 |
| Magnetic Pickup and Mirror | 600T41911 |
| Socket Driver | 600T1751 |
| Metric Feeler Gauge Set | 600T41509 |
| Screwdriver Handle | 600T40212 |
| 13 mm Wrench | 600T40505 |
| 10 mm Wrench | 600T40504 |

**Table 3 Image Reference Pattern**

| Image Reference Pattern | |
|---|---|
| Solid Area Fill | 82P520 |
| Image Darkness | 82E7030 |
| Background | 82P502 |

**Table 4 Machine Consumables**

| Machine Consumables | |
|---|---|
| **Description** | **Part** |
| Photoreceptor | 1R535 |
| Toner Cartridge (with Reclaim Bottle) | 6R880 |
| Developer (7 lb bottle) | 5R310 |
| Dusting Pouch | 8R181 |

**Table 5 Cleaning Materials**

| Cleaning Materials | |
|---|---|
| **Description** | **Part** |
| Cleaning Solvent | 43P10 |
| Disposable Gloves | 99P3024 |
| Drop Cloth | 35P1638 |
| Film Remover | 43P45 |
| Formula A | 43P48 |
| Heavy Duty Towels | 35P3191 |
| Lint-free Cloth | 600S4372 |
| Polyurethane Pads (40) | 600S4653 |
| Photoreceptor Maintenance Kit | 600S5838 |

**Table 6 Other Tools and Supplies**

| Other Tools and Supplies | |
|---|---|
| **Description** | **Part** |
| 20 lb Roll Bond Media | 22E630 |
| Oil Tube (8 cc) | 93E811 |
| Log Holder | 600P293 |
| Media Message | 600P60017 |

**Table 6 Other Tools and Supplies**

| | |
|---|---|
| Machine Log | 611P22478 |

**Table 7 Special Tools**

| Special Tools | |
|---|---|
| **Description** | **Part** |
| Serial Loopback Tools Kit | 600K60890 |

## General Tools and Supplies (EO)

**Table 1 Tools**

| Tools | |
|---|---|
| **Description** | **Part** |
| Screwdriver Blade (6-inch x 3/16-inch) | 600T40203 |
| Pocket Screwdriver | 600T40205 |
| 5.5 mm Combination Spanner | 600T40501 |
| 7 mm Combination Spanner | 600T40502 |
| 5.5 mm Socket | 600T40701 |
| 7 mm Socket | 600T40702 |
| Longnose Pliers | 600T40901 |
| Diagonal Cutting Pliers | 600T40903 |
| Gland Nut Pliers | 600T40904 |
| Hex Key Set | 600T91702 |
| Retaining Ring Pliers | 600T41401 |
| 150 mm Rule | 600T41503 |
| 2-Meter Tape Measure | 600T41505 |
| Line Level | 600T41510 |
| Round File (6 inch) | 600T41801 |
| Flat File (6 inch) | 600T41802 |
| Cleaning Brush | 600T41901 |
| Scribing Tool | 600T41903 |
| Magnetic Pickup and Mirror | 600T41911 |
| Handle Male (1/4-inch drive) | 600T1751 |
| Metric Feeler Gauge Set | 600T41509 |
| Interlock Cheater | 600T91616 |
| Screwdriver Handle | 600T40212 |
| Vacuum Cleaner | 600T91720 |
| Vacuum Cleaner Bags (10) | 603T80130 |
| 13 mm Combination Spanner | 600T40505 |
| Light Shield | 600T1198 |
| Digital Multimeter | 600T2020 |
| DMM Test Lead Kit | 600T1923 |
| Test Leads (required for 600T2020) | 600T1660 |
| Electrometer | 600T1620 |
| Electrometer Probe Wing | 600T1728 |
| Touch-up Paint | 93K1030 |

**Table 2 Machine Consumables (EO)**

| Machine Consumables (EO) | |
|---|---|
| **Description** | **Part** |
| Photoreceptor | 1R535 |

**Table 2 Machine Consumables (EO)**

| | |
|---|---|
| Toner | 6R880 |
| Developer | 5R310 |

**Table 3 Cleaning Materials (EO)**

| Cleaning Materials (EO) | |
|---|---|
| **Description** | **Part** |
| Dusting Pouch | 8R90139 |
| Photoreceptor Maintenance Kit | 600S92126 |
| Photoreceptor Wash Solvent / General Cleaning Solvent | 8R90176 |
| Cleaning Cloth | 8R90019 |
| Cleaning Cloth, Treated (Not for use on Corotrons) | 35P1638 |
| Lint-free Cloth (Rayon) | 600S4372 |
| Cleaner, General Purpose | 8R90175 |
| Formula A | 43P48 |

**Table 4 Image Reference Pattern**

| Image Reference Pattern | |
|---|---|
| Solid Area | 82P520 |
| Image Darkness | 82E7030 |
| Background | 82P502 |

**Table 5 Branch Tools (EO)**

| Branch Tools (EO) | |
|---|---|
| **Description** | **Part** |
| Temperature Probe Assembly | 499T9570 |
| Straight Temperature Probe (Use with 499T9570) | 499T9572 |
| Adapter Plugs | 600T91711 |

## Other Tools and Supplies (EO)

**Table 6 Lubricants**

| Lubricants | |
|---|---|
| **Description** | **Part** |
| Oil Tellus | 8R90180 |
| | |
| Grease Alvania No 2 | 600T90340 |
| Silicone Grease | 600T90429 |

**Table 7 Nationalization Kits**

| Nationalization Kits | |
|---|---|
| **Generic Contents** | **Part** |
| User Guide | Ref. Only |
| Safety Label (Non-English) | Ref. Only |

**Table 7 Nationalization Kits**

| | |
|---|---|
| Safety Label, Rails (Non-English) | Ref. Only |
| Power Cord | Ref. Only |
| Log Book | Ref. Only |
| PROMs (Message Sets) | Ref. Only |
| Media, A0 Roll 80 GSM Bond | Ref. Only |
| Media Starter Pack (A1) | Ref. Only |

**Table 8 Special Tools**

| Special Tools | |
|---|---|
| **Description** | **Part** |
| Serial Loopback Tools Kit | 600K60890 |

# Molex Connector Repair Procedure

## Purpose

The purpose of this procedure is to show the approved method of repair or replacement of the wire terminals in either the Pin Housing Connectors or the Socket Housing Connectors without damaging them.

**CAUTION**

*The Molex connectors will break easily. Use only approved tools and procedures when extracting modules or terminals, or resetting the terminal locking tabs.*

## Items Required

600T1825 Extraction Tool

## Procedure

1. ( Figure 1): Familiarize yourself with the Molex Extraction Tool components.

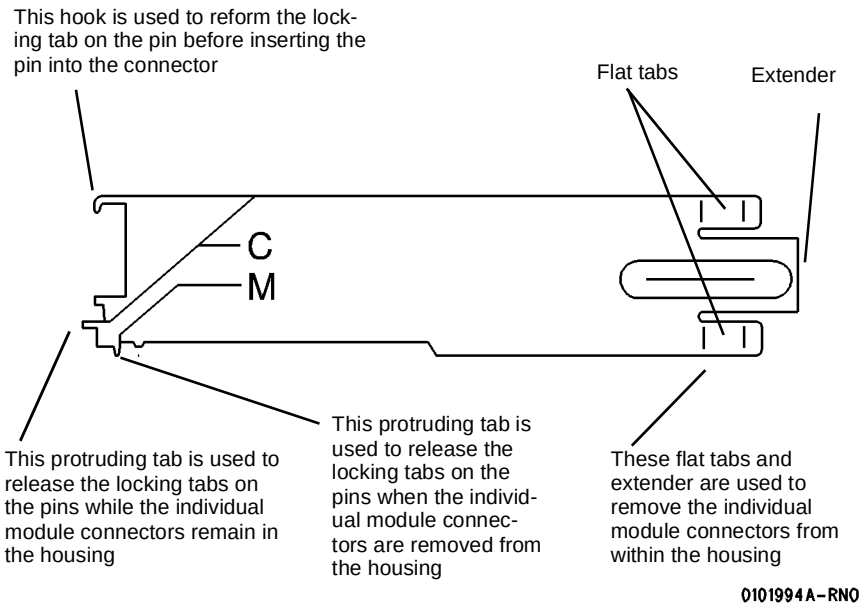


**Figure 1 Molex Extraction Tool Components**

**CAUTION**

*Note the location of the individual module connectors in the housing before removing them. This will ensure that they are reinstalled correctly after the repair to the terminals is complete. Failure to position the individual connectors correctly will cause the printer to malfunction, causing damage.*

**CAUTION**

*Use caution when forcing the housing body away from the module connector. Too much force could cause damage to the housing body.*

2. ( Figure 2): Remove the individual module connectors from the housing.

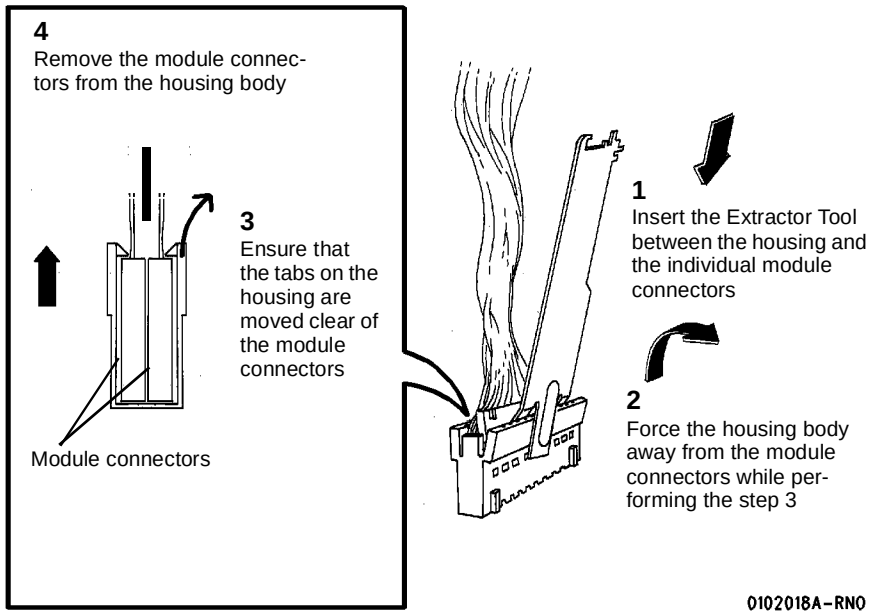


**Figure 2 Removing the Module Connectors**

***NOTE:*** *Insert the Extractor Tab until the face of the tool is flush with the connector housing.*

3. ( Figure 3):Remove the terminal from the connector.

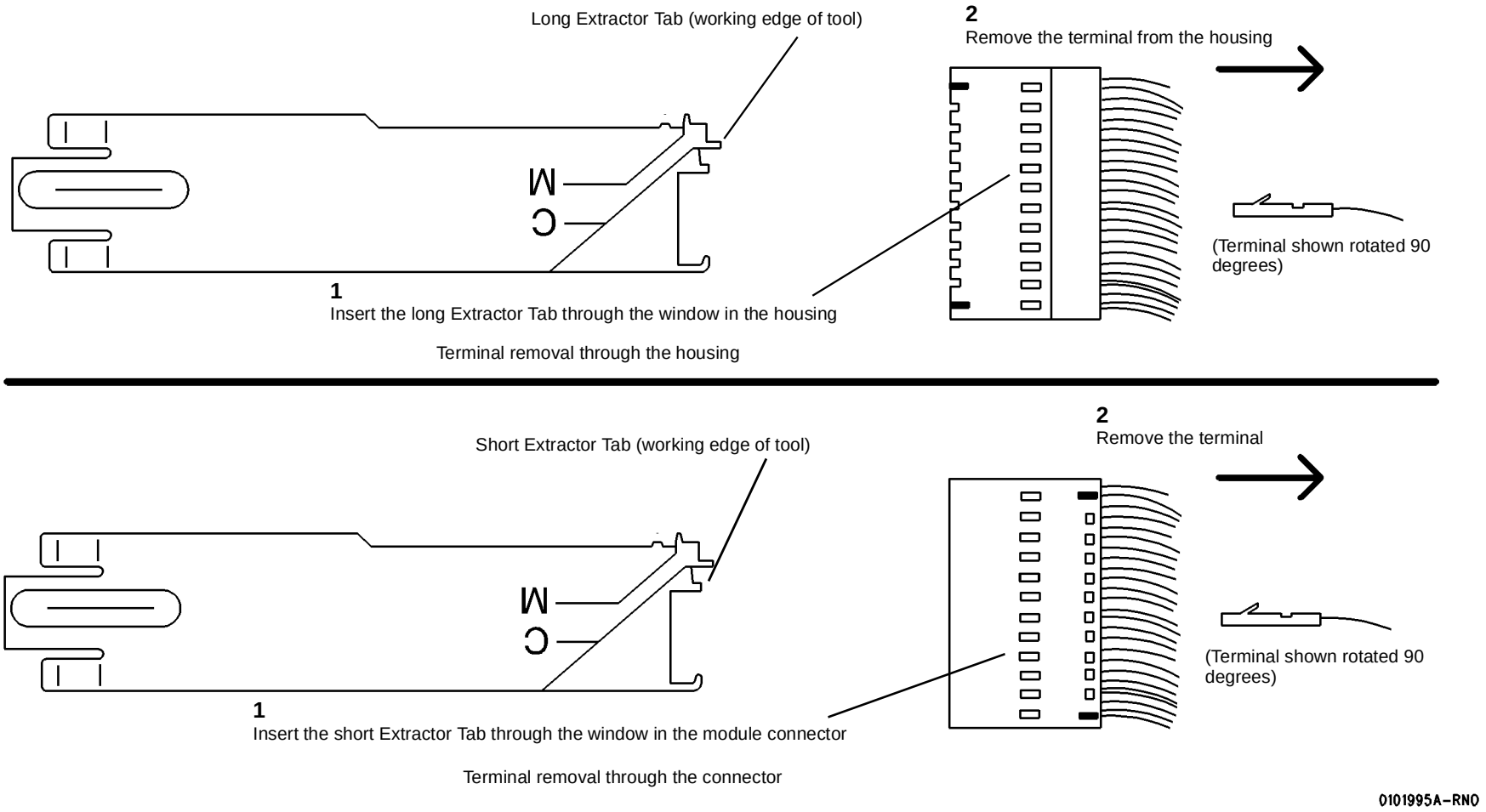


**Figure 3 Removing the Terminal from the Connector**

4. ( Figure 4): Reform the Terminal Locking Tab.

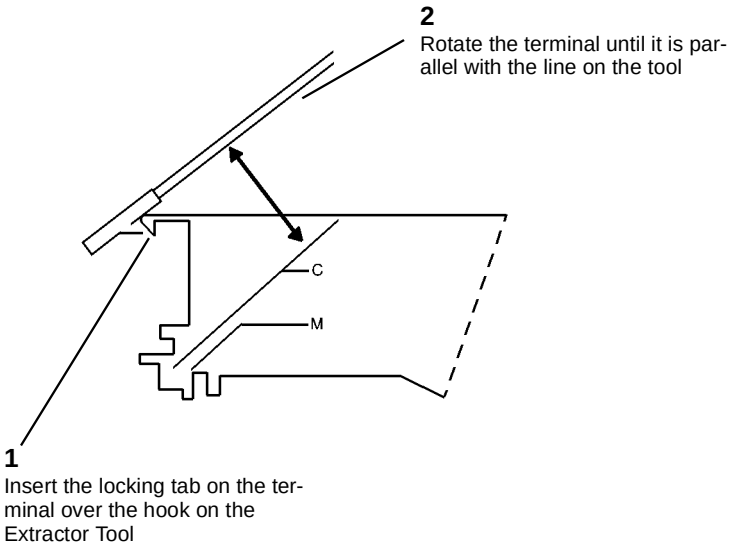


**Figure 4 Removing the Locking Tab**

5. Reinstall the terminal to the pin position from which it was removed.
6. Reinstall the individual module connectors to the correct locations noted at the beginning of this procedure. Refer to Section 7 for detail of connector configuration.

# Product Specifications

## Physical Characteristics

**Table 1**

| Printer Dimensions | |
|---|---|
| Weight | 8830 650 lbs (295 kg)<br>8825 (1 drawer) 620 lbs (281 kg)<br>8825 (2 drawer) 635 lbs (286 kg) |
| Height | 43 inches (1092 mm) |
| Width | 23 inches (584 mm) |
| Depth | 57 inches (1448 mm) |
| Product Code | 8YG |

( Figure 1): Printer front dimensions

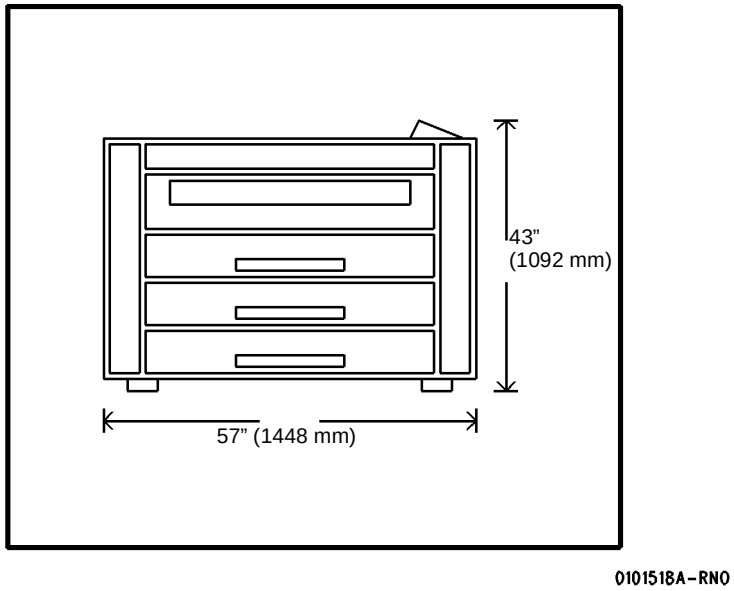


**Figure 1 Printer Front Dimensions**

## Minimum Space Requirements

( Figure 2): Printer footprint

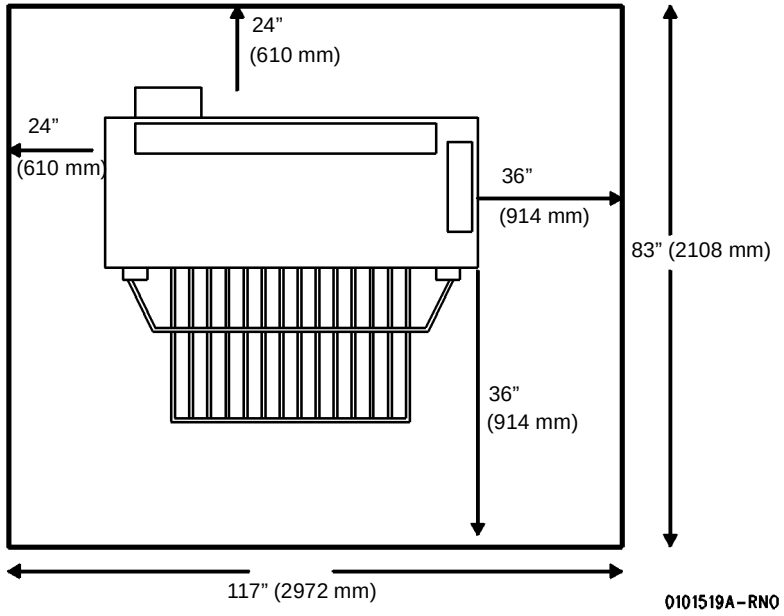


**Figure 2 Printer Footprint**

## Electrical Specifications

The printer is designed to operate on a 20 Amp, 105 - 125 VAC, 60 Hz single phase dedicated line protected by a circuit breaker.

**Table 2**

| Current Consumption: | |
|---|---|
| Rest | 1.0 Amps |
| Standby | 1.4 Amps |
| Ready | 6.0 Amps |
| Running | 16.0 Amps |

**Table 3**

| Power Consumption: | |
|---|---|
| Rest | 120 Watts |
| Standby | 1000 Watts |
| Ready | 690 Watts |
| Running | 1840 Watts |

Power Cord Length: 10 feet (3 m)

## Environmental Conditions

Temperature:

Maximum 80°F (27°C)

Minimum 60°F (10°C)

Humidity:

Maximum 80%

Minimum 20%

Maximum Elevation:

7000 feet (2133 m)

**Table 4**

| Heat Emission (BTU/Hr): | |
|---|---|
| Rest | 393 |
| Standby | 550 |
| Ready | 2350 |
| Running | 6270 |

**Table 5**

| Media Specifications | |
|---|---|
| Bond | 20 Lb |
| Vellum | 20 Lb |
| Film | 4 mil |
| Tracing | 4 mil |

Roll Size Width: 11” (279.4 mm)  36” (914.4 mm)

Roll Size Diameter: 3” (76.2 mm) to 6.7” (170.2 mm)

Output Print Specifications:

Cut Sheet Minimum Size - 8.5 X 11” (216 X 279 mm) Portrait)

Roll Sheet Minimum Size - 11” X 8.5” (279 X 216 mm) Landscape

Maximum Size 36” X 48 feet (914 mm X 12.2 m)

80 feet (24.4 m) Optional

# 8825 Change Tag Information

## Introduction

The purpose of this section is to list the Change Tag Index for the 8825 Printer.

All important modifications are identified by a Tag number on a matrix card attached to the machine.

This section describes all of the Tags as well as multinational applicability, classification codes, and permanent or temporary modification information.

### Classification Codes

A Tag number may be required to identify differences between parts that cannot be interchanged, or differences in diagnostic, repair, installation, or adjustment procedures. A Tag number may also be required to identify the presence of optional hardware, special non-volatile memory programming, or if mandatory modifications have been installed.

Each Tag number is given a classification code to identify the type of change the Tag has made:

**M** - Mandatory
**N** - Not installed in the field
**O** - Optional
**R** - Repair

## TAG: 25

**CLASS:** M
**USE:**
**MFG SERIAL NUMBERS:** Cut in 4/21/99: 101K40580/101K40570/105K18270/160K54570
7YG-90999 Through 7YG-910003
DT9-031032, 031033, 031035, 031036, 031037
8YG-065142; T5R-030359; T4R-112-047751-6;
DU0-112-059620-5
**NAME:** **8825/8830 AC/DC Power Distribution Changes**
**PURPOSE:** Consists of: DC Power Harness, DC Power Module, 10 Volt Power Supply, Circuit Breaker replacement for current Ground Fault Indicator, Driver PWB.
**KIT NUMBER:**
**REFERENCE:**

## TAG: 26

**CLASS:** O
**USE:** All
**MFG SERIAL NUMBERS:** US-8YG064000/2/5/6/7 & 8YG064048
Cut-in: 11/17/98 133K19970
DUO-059110 Through DUO-059114
T5R-030065; T4R-112-047534-3; DT9-030282;
8YG-064107; 7YG-909551-2
**NAME:** **Firmware Version 01.07.00-16**
**PURPOSE:**
**KIT NUMBER:** U.S - 600K59938 E.O - 600K59958
**REFERENCE:**

## TAG: 27

**CLASS:** O
**USE:** All
**MFG SERIAL NUMBERS:** Cut-in: 4/22/99 - 160K63940
DT9-031050 - DT9031054
8YG-065142; T5R-030359; T4R-112047751-6,
DU0-112-059620-5
**NAME:** **New IOT Control PWB**
**PURPOSE:** Change in IOT Control PWB design replaces EPROMS with Flash ROM. Enables Controller IOT firmware upgrades.
**KIT NUMBER:** U.S - 600K75320
**REFERENCE:**

## TAG: 28

**CLASS:** O

**USE:** All

**MFG SERIAL NUMBERS:** Cut-in: 5/21/99 62K7893
DT9-031264 Through DT9-031267
8YG-065294; 7YG-910059-1; T4R-112-047928-4;
DU0-112-059668-0

**NAME:** **New Image Module Assembly**

**PURPOSE:** Removal of RS 422 board enables downward compatiblity by removing the connector PWB and replacing it with the RS422 PWB from the existing bar. (Tag 28 on machine without the RS422 PWB.)

**KIT NUMBER:** U.S - 600K58761

**REFERENCE:**

## TAG: 29

**CLASS:**

**USE:** All

**MFG SERIAL NUMBERS:**

**NAME:** **Common AC Chassis Assembly and New GFI**

**PURPOSE:** Provide common chassis assembly.

**KIT NUMBER:** Manufacturing Build Only

**REFERENCE:**

## TAG: 31

**CLASS:** O

**USE:** All

**MFG SERIAL NUMBERS:**

**NAME:** **Tracing Paper Problem Fix**

**PURPOSE:** Eliminates Tracing Paper Problem

**KIT NUMBER:** 600K89510

**REFERENCE:**

## TAG: 32

**CLASS:** O

**USE:** All

**MFG SERIAL NUMBERS:**

**NAME:** **Printer Process Speed Problem Fix Firmware**

**PURPOSE:** To Eliminate Process Speed Problem

**KIT NUMBER:**

**REFERENCE:**

## TAG: 50

**CLASS:** O

**USE:** (50 Hz) Only

**MFG SERIAL NUMBERS:** Cut-in: 12/ 2000

**NAME:** **Light Flicker Modification for use on (50 Hz) Printers**

**PURPOSE:** To reduce the customer light flicker problem caused by the Fuser System. Required compliance with European Regulatory Authority standard EMC Directive 89/ 336/ EEC.)

**KIT NUMBER:** Manufacturing Build only

**REFERENCE:** PL

## TAG: 53

**CLASS:**

**USE:**

**MFG SERIAL NUMBERS:**

**NAME:** **Firmware Upgrade**

**PURPOSE:**

**KIT NUMBER:**

**REFERENCE:** PL

## TAG: 55

**CLASS:** O
**USE:**
**MFG SERIAL NUMBERS:**
**NAME:** **10V FWR PWB**
**PURPOSE:** To PROVIDE A NEW PWB.
**KIT NUMBER:**
**REFERENCE:** PL

## TAG: 87

**CLASS:** O
**USE:**
**MFG SERIAL NUMBERS:**
**NAME:** **Firmware Upgrade**
**PURPOSE:**
**KIT NUMBER:**
**REFERENCE:** PL

## TAG: 88

**CLASS:** O
**USE:**
**MFG SERIAL NUMBERS:**
**NAME:** **Firmware Upgrade**
**PURPOSE:**
**KIT NUMBER:**
**REFERENCE:** PL

## TAG: 89

**CLASS:** O
**USE:** All
**MFG SERIAL NUMBERS:** N/A
**NAME:** **Transport Assembly Kit**
**PURPOSE:** Provides a Media Transport Assembly with single sheet bypass capability.
**KIT NUMBER:** 98K72830
**REFERENCE:** Customer purchased kit

## TAG: 90

**CLASS:** O
**USE:** All
**MFG SERIAL NUMBERS:**
**NAME:** **Optional Drawer Kit**
**PURPOSE:** Provides an optional second drawer to meet customer printing requirements.
**KIT NUMBER:** 98K72820
**REFERENCE:** Customer purchased kit

# 8830 Change Tag Information

## Introduction

The purpose of this section is to list the Change Tag Index.

All important modifications are identified by a Tag number on a matrix card attached to the machine.

This section describes all of the Tags as well as multinational applicability, classification codes, and permanent or temporary modification information.

### Classification Codes

A Tag number may be required to identify differences between parts that cannot be interchanged, or differences in diagnostic, repair, installation, or adjustment procedures. A Tag number may also be required to identify the presence of optional hardware, special non-volatile memory programming, or if mandatory modifications have been installed.

Each Tag number is given a classification code to identify the type of change the Tag has made:

- **M** - Mandatory
- **N** - Not installed in the field
- **O** - Optional
- **R** - Repair

## TAG: 1

**CLASS:** M
**USE:** All
**MFG SERIAL NUMBERS:**
**NAME:** **EME enhancements within Assembly 62K7891**
**PURPOSE:** Improves EME emissions.
**KIT NUMBER:** N/A
**REFERENCE:**

## TAG: 2

**CLASS:** M
**USE:** All
**MFG SERIAL NUMBERS:** US - 8YG060018 and up - - -EO - 110907020-0
**NAME:** **IOT Firmware update**
**PURPOSE:** Updates US Firmware 133K15992 version # 00.32.01-10
Updates EO Firmware 133K16161 version # 00.32.01-10
**KIT NUMBER:**
**REFERENCE:**

## TAG: 3

**CLASS:** M
**USE:** All
**MFG SERIAL NUMBERS:** US - 8YG060261 - - EO - 110907224-1 and up
**NAME:** **IOT Controller PWBA**
**PURPOSE:** Enabled folder interface
**KIT NUMBER:** N/A
**REFERENCE:**

## TAG: 4

**CLASS:** M
**USE:** All
**MFG SERIAL NUMBERS:** US - 8YG060120 and up - - EO - 110907064 and up
**NAME:** **IOT Controller PWB**
**PURPOSE:** Updates IOT Firmware US 133K15993 version to 00.33.00-10
Updates IOT Firmware EO 133K16162 version to 00.33.00-10
**KIT NUMBER:** N/A
**REFERENCE:**

## TAG: 5

**CLASS:** M
**USE:** All
**MFG SERIAL NUMBERS:** US - 8YG060363 and up - -EO -110907119-2 and up
**NAME:** **Support Bracket**
**PURPOSE:** Keeps the power cord from accidentally being disconnected from the printer.
Add Support Bracket to US AC Mod 101K25694
Add Support Bracket to EO AC Mod 101K27783
**KIT NUMBER:** 600K606610
**REFERENCE:**

## TAG: 6

**CLASS:** M

**USE:** All

**MFG SERIAL NUMBERS:**

**NAME:** **Developer Cover**

**PURPOSE:** Reduce thickness of cover. New Part Number 48E51410 not interchangeable with Old Cover 48E33770

**KIT NUMBER:** N/A

**REFERENCE:**

## TAG: 7

**CLASS:** M

**USE:** All

**MFG SERIAL NUMBERS:**

**NAME:** **Rhino Firmware**

**PURPOSE:** US Firmware 133K15994 version #01.01.00-10

EO Firmware 133K16163 version #01.01.00-10

**KIT NUMBER:** US Upgrade Kit - 600K59931 EO Upgrade Kit - 600K59951

**REFERENCE:**

## TAG: 8

**CLASS:** M

**USE:** All

**MFG SERIAL NUMBERS:** US - 8YG060619 and up - -EO - 110907269-5 and up

**NAME:** **Changes Xero Module**

**PURPOSE:** Improved P/R removal replacement

US - 126K05992

EO - 126K07152

**KIT NUMBER:** N/A

**REFERENCE:** P/N US - 126K30385 - -EO - 126K07152

## TAG: 9

**CLASS:** M

**USE:** EO Only

**MFG SERIAL NUMBERS:** EO - 110907114-1 and up

**NAME:** **IOT Firmware (537K47144 ROM)**

**PURPOSE:** US Firmware 133K15995 version #01.02.00-10 EO Firmware 133K16164 version #01.02.00-10US Upgrade Kit - 600K59932EO, Upgrade Kit - 600K59952 Nationalization Kit US 650K06200

**KIT NUMBER:**

**REFERENCE:**

## TAG: 10

**CLASS:** M

**USE:** All

**MFG SERIAL NUMBERS:** US - 8YG060517 and up - -110907207-5 and up

**NAME:** **IOT Controller PWB**

**PURPOSE:** Eliminates “Wavy Line” Defect. Issued 160K30285/600K62420 Spare Kit.

160K30385 IOT

160K30285 Spare

**KIT NUMBER:**

**REFERENCE:**

## TAG: 11

**CLASS:** M

**USE:** All

**MFG SERIAL NUMBERS:** US - 8YG060368 and up - -EO - 110907165 and up

**NAME:** **IOT Firmware (537K47145 ROM)**

**PURPOSE:** US Firmware 133K15996 version #01.03.00-10

EO Firmware 133K16165 version #01.03.00-10

**KIT NUMBER:** US Upgrade Kit - 600K59933 EO Upgrade Kit - 600K59953 Nationalization Kit US 650K06201

**REFERENCE:**

## TAG: 12

**CLASS:** M
**USE:** All
**MFG SERIAL NUMBERS:** US - 8YG060368 and up - -EO - 110907165 and up
**NAME:** **Transport Assembly**
**PURPOSE:**
**KIT NUMBER:**
**REFERENCE:** PN 22K49201

## TAG: 13

**CLASS:** M
**USE:** All
**MFG SERIAL NUMBERS:** -EO - 110907210-3
**NAME:** **Transport Assembly**
**PURPOSE:** New handle to secure the Fabric Belt
**KIT NUMBER:** N/A
**REFERENCE:** PN 22K49202

## TAG: 14

**CLASS:** M
**USE:** All
**MFG SERIAL NUMBERS:** MFG. SERIAL NUMBERS - EO 110907210-3 and up
**NAME:** **Media Roll Label**
**PURPOSE:** New label reflects 11". 052K03191 reworked with new Label (or) 052K03580 cut-in six (6) per machine.
**KIT NUMBER:** 600K62460
**REFERENCE:** P/N 052K03191 reworked with new Label (or) 052K03580 cut-in six (6) per machine.

## TAG: 15

**CLASS:** M
**USE:**
**MFG SERIAL NUMBERS:** US - 8YG060-824, EO - 110-907492-2
**NAME:** **Transport Assembly**
**PURPOSE:** New Corotron Endblocks
**KIT NUMBER:**
**REFERENCE:** 022K49203

## TAG: 16

**CLASS:** M
**USE:** All
**MFG SERIAL NUMBERS:**
**NAME:** **Firmware**
**PURPOSE:** US Firmware 133K15997 version #01.04.00-10
EO Firmware 133K16166 version #01.04.00-10
**KIT NUMBER:** US - Upgrade Kit - 600K59934 EO Upgrade Kit - 600K59954 Nationalization Kit - US 650K06202
**REFERENCE:**

## TAG: 17

**CLASS:** M
**USE:** All
**MFG SERIAL NUMBERS:**
**NAME:** **IOT Firmware**
**PURPOSE:** US Firmware 133K15998 version #01.04.07-10
EO Firmware 133K16167 version #01.04.07-10
**KIT NUMBER:** US Upgrade Kit - 600K59935EO Upgrade Kit - 600K59955Nationalization Kit (US) - 650K06203
**REFERENCE:**

## TAG: 18

**CLASS:** M
**USE:** All
**MFG SERIAL NUMBERS:**
**NAME:** **Data Plate**
**PURPOSE:** Change to Data Plate to enable Korea sales.
**KIT NUMBER:**
**REFERENCE:** PN 891E15361

## TAG: 19

**CLASS:** M
**USE:** All
**MFG SERIAL NUMBERS:** US - 8YG061469 to 474/688 to 670
**NAME:** **Output Current Adjustment**
**PURPOSE:** Establishes the correct electrostatic setup voltages for the Printer.
**KIT NUMBER:** 105K13542
**REFERENCE:**

## TAG: 20

**CLASS:** M
**USE:** All
**MFG SERIAL NUMBERS:**
**NAME:** **New Fuser Oil Assembly with new Timing Disk**
**PURPOSE:** Improved Performance
**KIT NUMBER:** 94K0330
**REFERENCE:**

## TAG: 21

**CLASS:** M
**USE:** All
**MFG SERIAL NUMBERS:**
**NAME:** **New Front Panel**
**PURPOSE:** Enables installation of Stacker Full Switch
**KIT NUMBER:** 30K55633 ( n/h 50K32171 )
**REFERENCE:**

## TAG: 23

**CLASS:** M
**USE:**
**MFG SERIAL NUMBERS:** 60 Hz 8YG061952 / 8YG061955
50 Hz 110908411/13/27/28/29
**NAME:** **IOT Firmware ver 01.05.06-13**
**PURPOSE:** Enables 8830 DDS System
**KIT NUMBER:** NACO - 600K59936EO - 600K59956
**REFERENCE:** 537K47148

## TAG: 24

**CLASS:** M
**USE:**
**MFG SERIAL NUMBERS:** 8YG063270-063274 8YG-063512 to524
**NAME:** **Firmware Ver 01.06.09-16**
**PURPOSE:**
**KIT NUMBER:** U.S - 600K59937 E.O - 600K59957
**REFERENCE:**

## TAG: 25

**CLASS:** M

**USE:**

**MFG SERIAL NUMBERS:** Cut in 4/21/99: 101K40580/101K40570/105K18270/ 160K54570
7YG-90999 Through 7YG-910003
DT9-031032, 031033, 031035, 031036, 031037
8YG-065142; T5R-030359; T4R-112-047751-6;
DU0-112-059620-5

**NAME:** **8825/8830 AC/DC Power Distribution Changes**

**PURPOSE:** Consists of: DC Power Harness, DC Power Module, 10 Volt Power Supply, Circuit Breaker replacement for current Ground Fault Indicator, Driver PWB.

**KIT NUMBER:**

**REFERENCE:**

## TAG: 26

**CLASS:** O

**USE:** All

**MFG SERIAL NUMBERS:** US-8YG064000/2/5/6/7 & 8YG064048
Cut-in: 11/17/98 133K19970
DUO-059110 Through DUO-059114
T5R-030065; T4R-112-047534-3; DT9-030282;
8YG-064107; 7YG-909551-2

**NAME:** **Firmware Version 01.07.00-16**

**PURPOSE:**

**KIT NUMBER:** U.S - 600K59938 E.O - 600K59958

**REFERENCE:**

## TAG: 27

**CLASS:** O

**USE:** All

**MFG SERIAL NUMBERS:** Cut-in: 4/22/99 - 160K63940
DT9-031050 - DT9031054
8YG-065142; T5R-030359; T4R-112047751-6,
DU0-112-059620-5

**NAME:** **New IOT Control PWB**

**PURPOSE:** Change in IOT Control PWB design replaces EPROMS with Flash ROM. Enables Controller IOT firmware upgrades.

**KIT NUMBER:** U.S - 600K75320

**REFERENCE:**

## TAG: 28

**CLASS:** O

**USE:** All

**MFG SERIAL NUMBERS:** Cut-in: 5/21/99 62K7893
DT9-031264 Through DT9-031267
8YG-065294; 7YG-910059-1; T4R-112-047928-4;
DU0-112-059668-0

**NAME:** **New Image Module Assembly**

**PURPOSE:** Removal of RS 422 board enables downward compatibility by removing the connector PWB and replacing it with the RS422 PWB from the existing bar. (Tag 28 on machine without the RS422 PWB.)

**KIT NUMBER:** U.S - 600K58761

**REFERENCE:**

## TAG: 29

**CLASS:**

**USE:** All

**MFG SERIAL NUMBERS:** 8YG061364 to 367

**NAME:** **Common AC CHassis and new design GFI**

**PURPOSE:** Improved Performance

**KIT NUMBER:**

**REFERENCE:**

## TAG: 31

**CLASS:** O
**USE:** All
**MFG SERIAL NUMBERS:**
**NAME:** **Eliminate Tracing Paper Problem**
**PURPOSE:** Improved Performance
**KIT NUMBER:**
**REFERENCE:**

## TAG: 32

**CLASS:** O
**USE:** All
**MFG SERIAL NUMBERS:**
**NAME:** **Process Speed Upgrade**
**PURPOSE:** Improved Performance
**KIT NUMBER:**
**REFERENCE:**

## TAG: 40

**CLASS:** M
**USE:** All
**MFG SERIAL NUMBERS:** 8YG061364 to 367
**NAME:** **New Cutter Motor**
**PURPOSE:** Improved Performance- New Pittman Motor in Cutter
**KIT NUMBER:**
**REFERENCE:** 50K32172

## TAG: 50

**CLASS:**
**USE:** (50 Hz) Only
**MFG SERIAL NUMBERS:** Cut-in:
**NAME:** **Light Flicker Modification for use on (50 Hz) Printers**
**PURPOSE:** To reduce the customer light flicker problem caused by the Fuser System. Required compliance with European Regulatory Authority standard EMC Directive 89/ 336/ EEC.)
**KIT NUMBER:** Manufacturing Build only
**REFERENCE:** PL

## TAG: 53

**CLASS:**
**USE:**
**MFG SERIAL NUMBERS:**
**NAME:** **Firmware Upgrade**
**PURPOSE:**
**KIT NUMBER:**
**REFERENCE:** PL

## TAG: 55

**CLASS:** O
**USE:**
**MFG SERIAL NUMBERS:**
**NAME:** **10V FWR PWB**
**PURPOSE:** To PROVIDE A NEW PWB.
**KIT NUMBER:**
**REFERENCE:** PL

## TAG: 87

**CLASS:** O
**USE:**
**MFG SERIAL NUMBERS:**
**NAME:** **Firmware Upgrade**
**PURPOSE:**
**KIT NUMBER:**
**REFERENCE:** PL

## TAG: 88

**CLASS:** O
**USE:**
**MFG SERIAL NUMBERS:**
**NAME:** **Firmware Upgrade**
**PURPOSE:**
**KIT NUMBER:**
**REFERENCE:** PL

## TAG: 89

**CLASS:** M
**USE:**
**MFG SERIAL NUMBERS:**
**NAME:**
**PURPOSE:** Firmware
**KIT NUMBER:**
**REFERENCE:**

## TAG: 90

**CLASS:** M
**USE:** All
**MFG SERIAL NUMBERS:**
**NAME:** **A/B Switch**
**PURPOSE:** Enables the Printer to be connected to the XPC and to the 8830 Controller.
**KIT NUMBER:** 98K65670
**REFERENCE:** Spares - 162K41460, 162K41440, 162K28840

# 7 Wiring Data

## Block Schematic Diagrams

### Level 1 BSD


How To Use BSDs ..... 7-3
Level 1 BSD ..... 7-4


### Standby Power


BSD 1.1A Main Power On (With “Delta” Noise Filter) (50 and 60 HZ) ..... 7-9
BSD 1.1B Main Power On (With “CORCOM” Noise Filter) (50 and 60 HZ) ..... 7-11
BSD1.2 Power Generation (1 of 3) (Without Tag/ MOD 25) ..... 7-13
BSD 1.2 DC Power Generation (1 of 3) (With TAG/ MOD 25) and (50 Hz With TAG/ MOD 50) 7-16
BSD 1.2 DC Power Generation (1 of 3) (W/ Tag 25 Driver PWB Only) ..... 7-19
BSD 1.2 DC Power Generation (1 of 3) (With Tag 25 and Updated Driver PWB) ..... 7-22
BSD 1.3 Interlock Monitoring ..... 7-25
BSD 1.4 Machine Cooling ..... 7-27


### Mode Control


BSD 2.1 Mode Selection ..... 7-29


### Machine Run Control


BSD 3.1 Machine Run Control ..... 7-31


### Print Power


BSD 4.1 Fuser Roll Drive ..... 7-33
BSD 4.2 Developer Drive ..... 7-35
BSD 4.3 Drum Drive ..... 7-37


### Imaging Imaging (Right Side)


BSD 6.1 Imaging Right Side (W/ O TAGS 27 and 28) (Differential) ..... 7-39
BSD 6.1 Imaging Right Side (1 of 2) (With TAGS 27 and 28) (Single Ended) ..... 7-41
BSD 6.2 Imaging Left Side (1 of 2) (Without TAGS 27 and 28) (Differential) ..... 7-43
BSD 6.2 Imaging Left Side (1 of 2) (With TAGS 27 and 28) (Single Ended) ..... 7-45


### Paper Supplying


BSD 7.1 Media Drive ..... 7-47
BSD 7.2 Media Feed, Roll 1 ..... 7-49
BSD 7.3 Media Feed, Roll 2 ..... 7-51
BSD 7.4 Media Feed, Roll 3 ..... 7-53
BSD 7.5 Media Cutting ..... 7-55


### Paper Feeding


BSD 8.1 Media Registration and Transportation ..... 7-57


### Xerographics


BSD 9.1 Charging ..... 7-61
BSD 9.2 Exposure ..... 7-63
BSD 9.3 Development ..... 7-64
BSD 9.4 Image Transfer and Media Stripping ..... 7-66
BSD 9.5 Drum Cleaning ..... 7-67
BSD 9.6 Drum Discharging ..... 7-69
BSD 9.7 Toner/Developer Dispense ..... 7-71
BSD 9.8 Corotron and Developer Bias Power ..... 7-73


### Print Transportation and Fusing


BSD 10.1 Fuser Heat (W/ O TAG/ MOD 25 AND 50) ..... 7-75
BSD 10.1 Fuser Heat (W/TAG25) AND (W/ O TAG 50) ..... 7-78
BSD 10.1 Fuser Heat (W/25 AND TAG 50) ..... 7-81
BSD 10.2 Fuser Oil Dispensing ..... 7-84
BSD 10.3 Fusing and Media Exit ..... 7-86


### Plug/Jack


Plug/Jack List ..... 7-89

## How To Use BSDs

Normally, you will be directed to a specific BSD, (Block Schematic Diagram) from the Level 1 Entry Procedure. If you have a problem that is not identified in Level 1, then refer to the following Level 1 BSD to determine an entry point for troubleshooting. Note that the Level 1 BSD shows the “standard” Chains 1, 2, 3, 4, 6, 7, 8, 9, and 10. Each Level 2 BSD is shown within the Level 1 BSD. For example, Chain 6, Imaging, contains two Level 2 Chains: Chain 6.1 Imaging (Right Side) and Chain 6.2, Imaging (Left Side). All of the necessary inputs and outputs for each Chain and for each Level 2 BSD are shown in the Level 1 BSD.

For example, if the User Interface is not functioning properly, refer to the Level 1 BSD, Sheet 1, and observe that Chain 2, Mode Selection is the “most likely” place to start. Then, you should proceed to BSD 2.1 and use that information to diagnose your problem. Each BSD contains the necessary wiring information, physical location of components information, and Diagnostic Code information to assist you in identifying the specific fault.

***NOTE:*** *In the Block Schematic Diagrams that follow, the term “FOR” = Forever or unswitched voltage.*

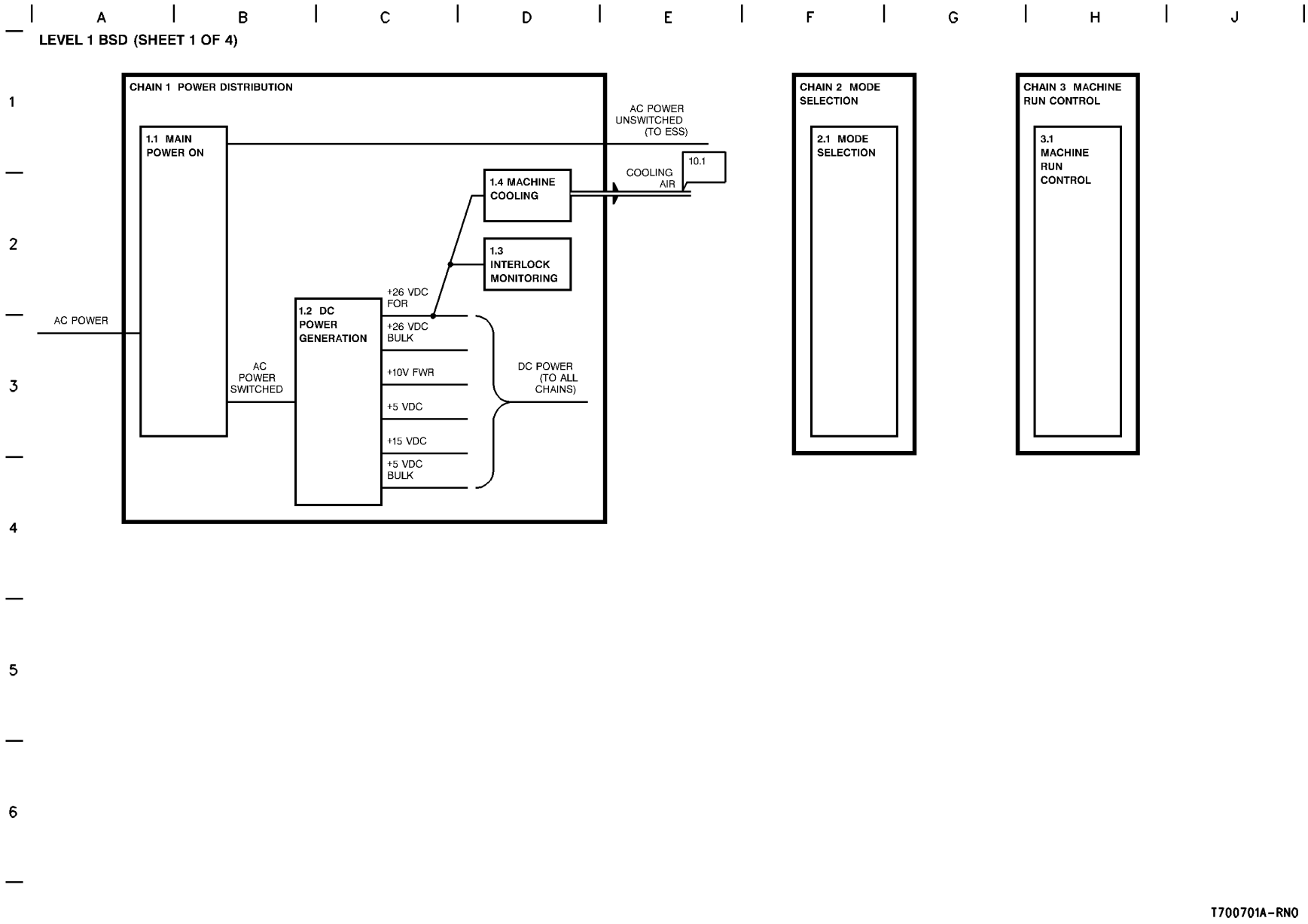


**Figure 1 Level 1 BSD (1 of 4)**

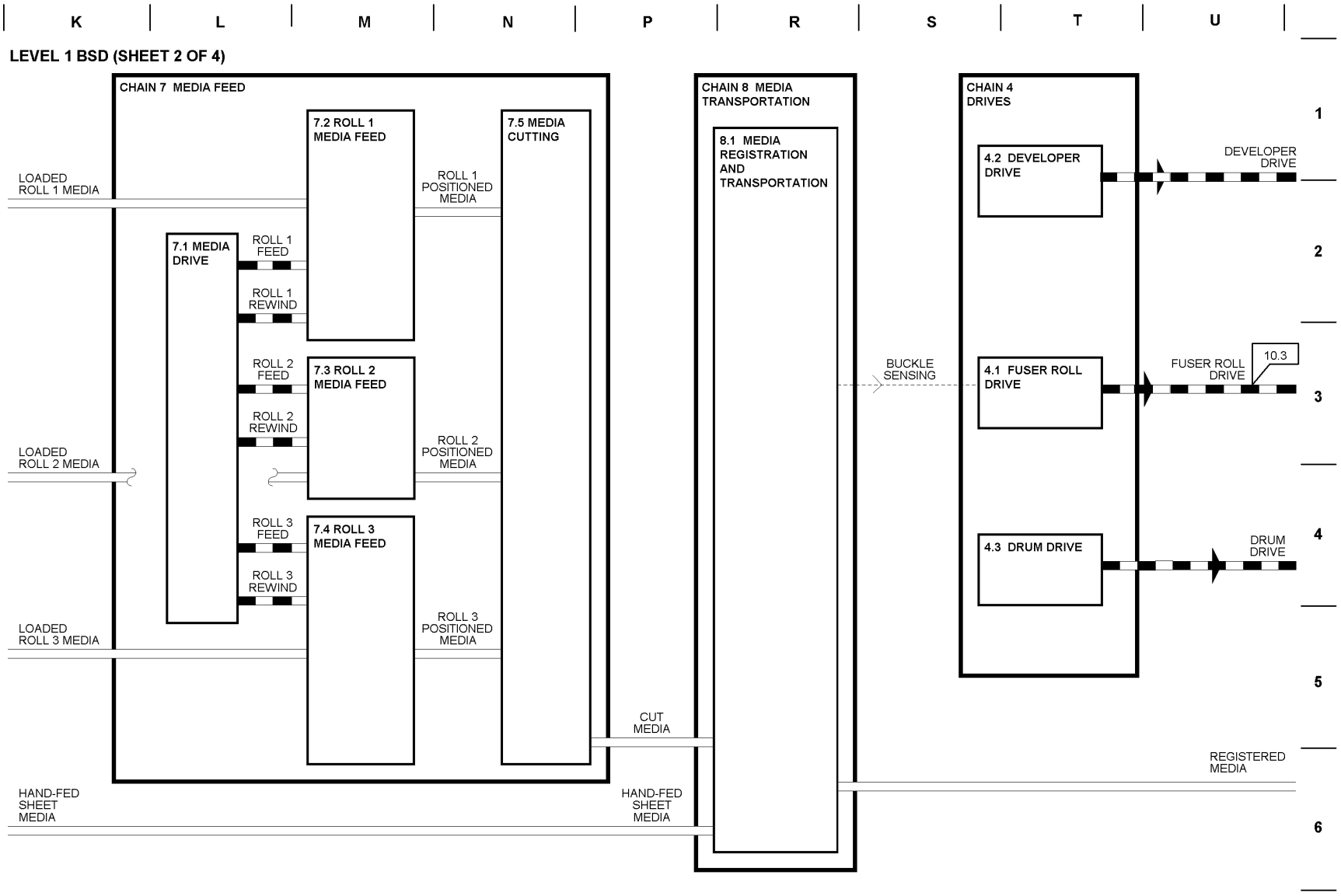


**Figure 2 Level 1 BSD (2 of 4)**

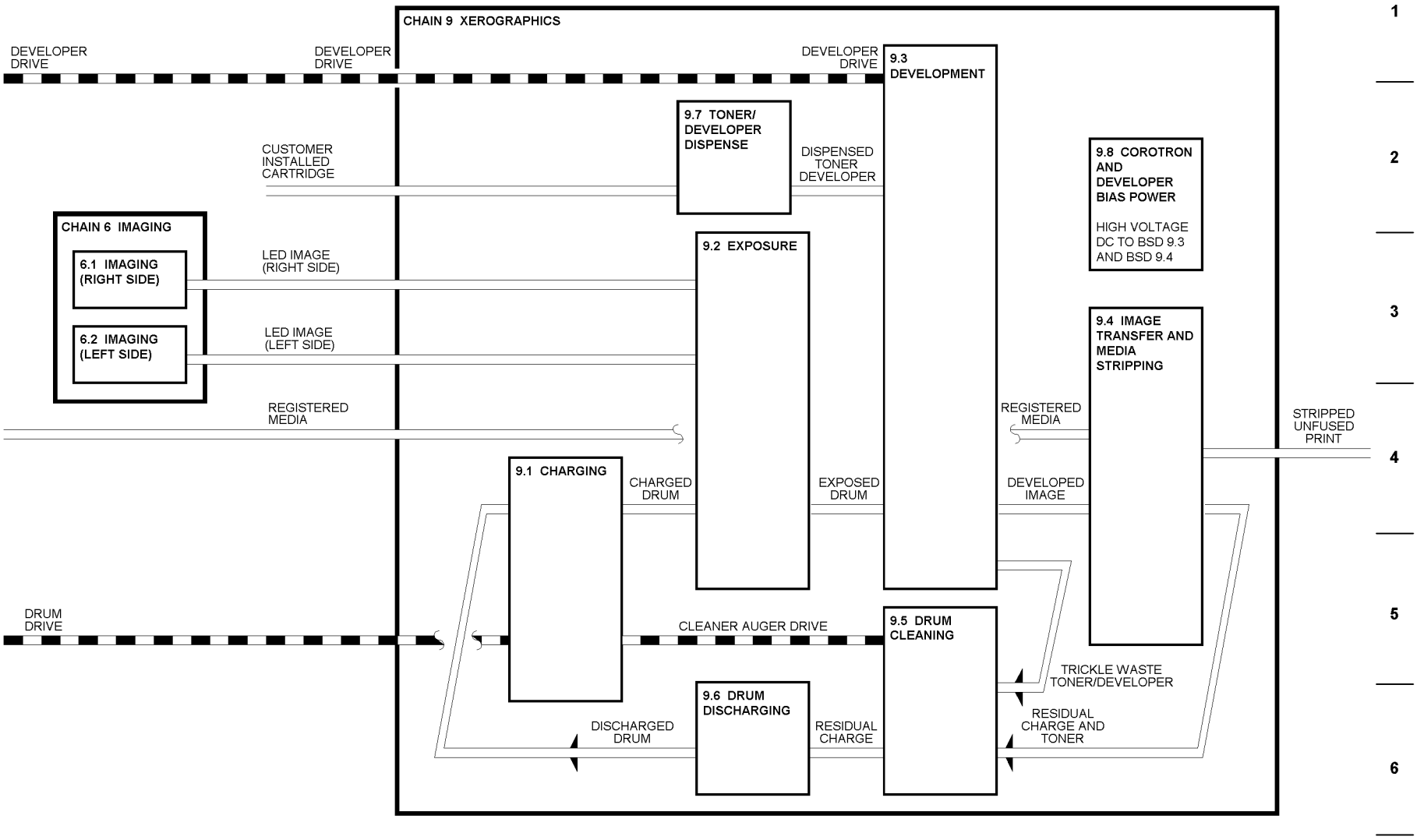


**Figure 3 Level 1 BSD (3 of 4)**

LEVEL 1 BSD (SHEET 4 OF 4)

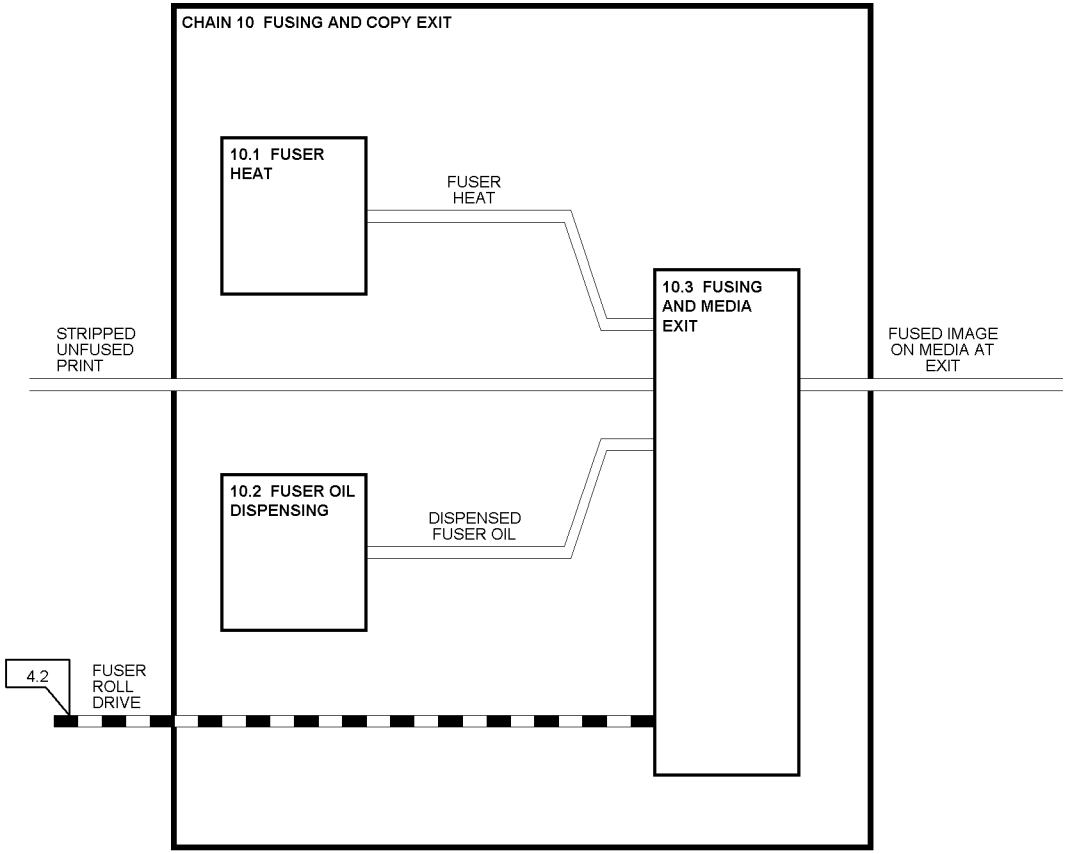


Figure 4 Level 1 BSD (4 of 4)

# BSD 1.1A Main Power On (With “Delta” Noise Filter) (50 and 60 HZ)

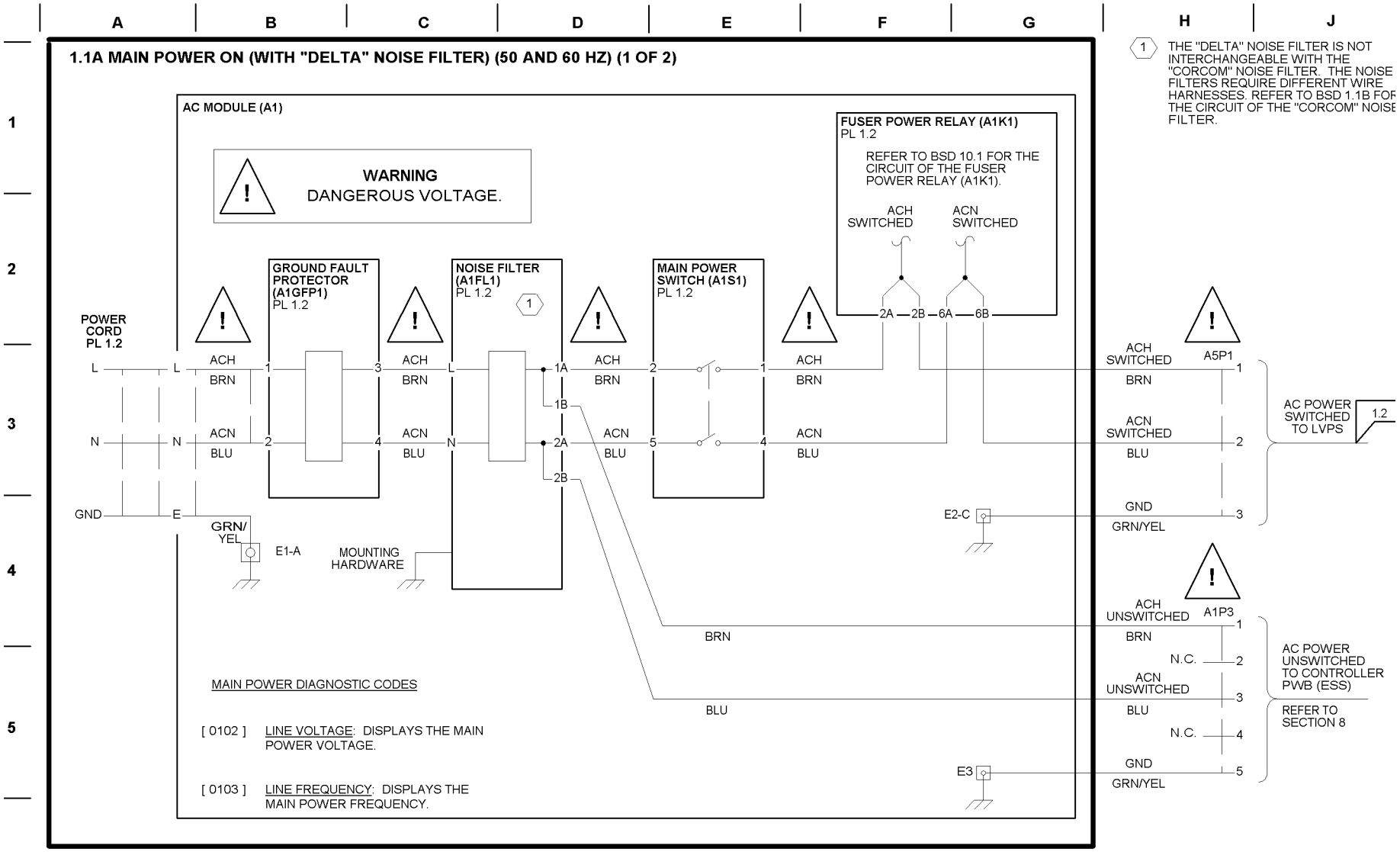

## 1.1A MAIN POWER ON (WITH "DELTA" NOISE FILTER) (50 AND 60 HZ) (2 OF 2)

### W/O TAG 25

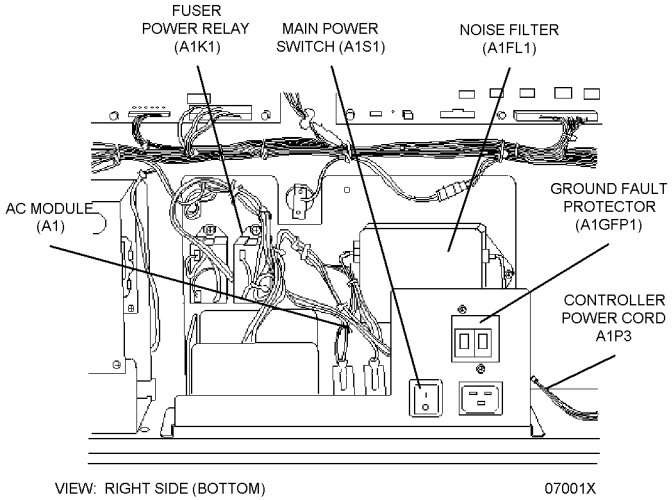


VIEW: RIGHT SIDE (BOTTOM) 07001X

### W/ TAG 25

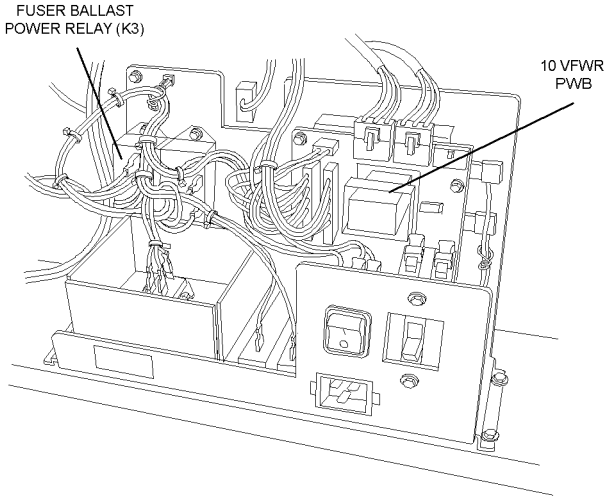


07001004A-JAC

### W/ TAG 25 AND 50 Hz W/ TAG 50

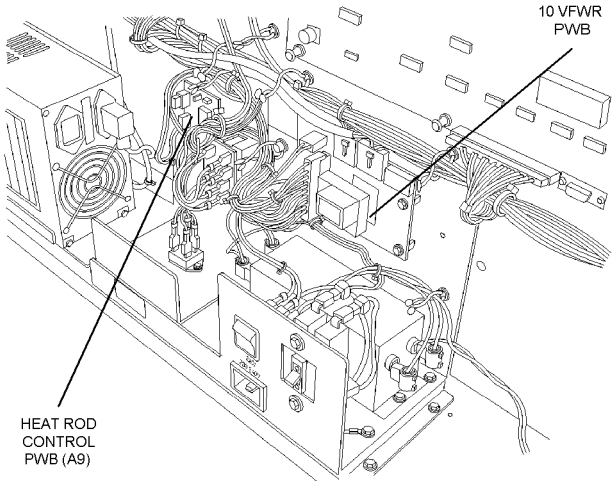


1 2 3 4 5 6 7

# BSD 1.1B Main Power On (With “CORCOM” Noise Filter) (50 and 60 HZ)

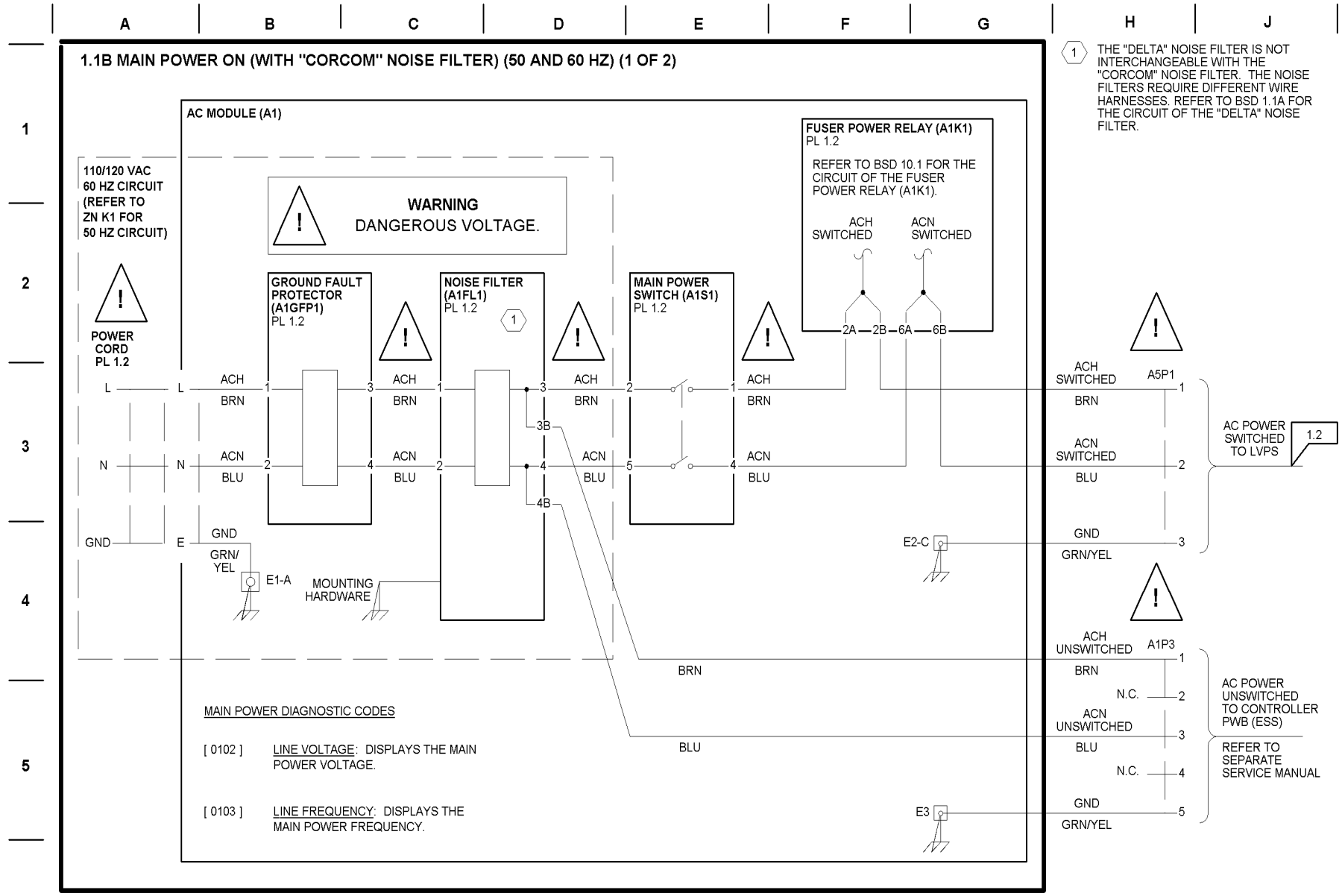

## 1.1B MAIN POWER ON (WITH "CORCOM" NOISE FILTER) (50 AND 60 HZ) (2 OF 2)

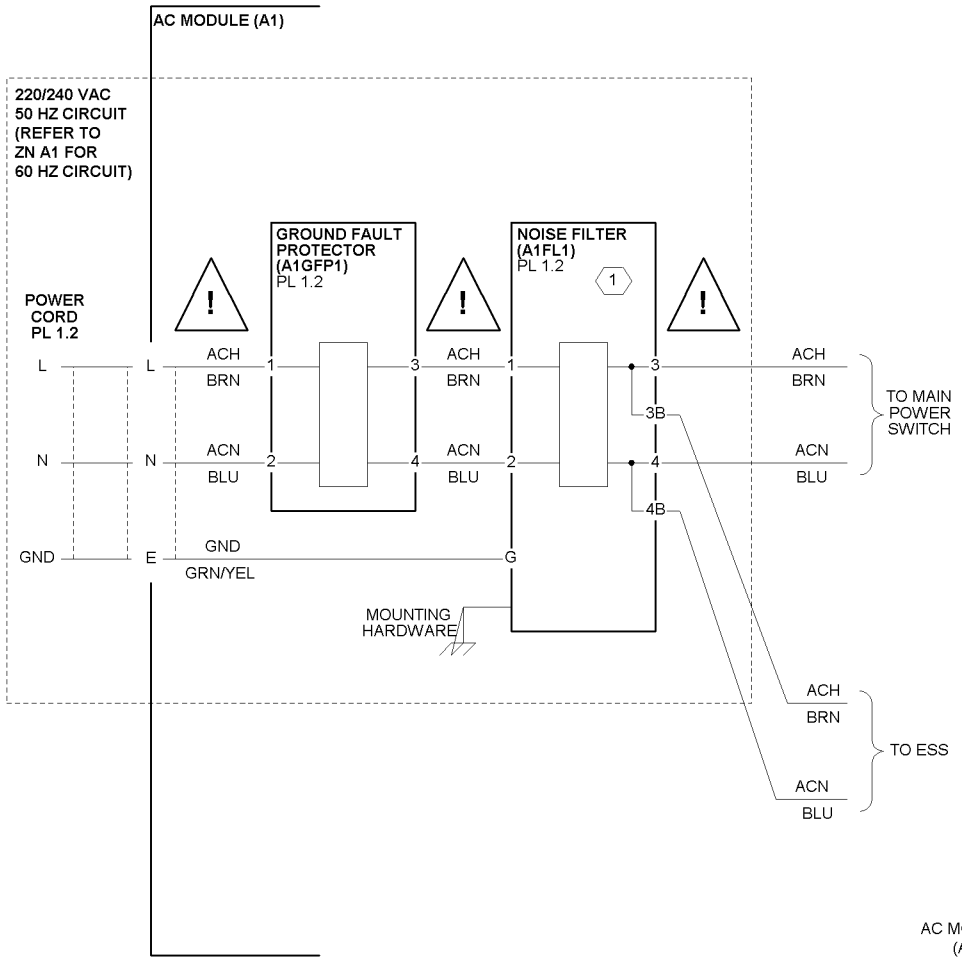


W/ TAG 25

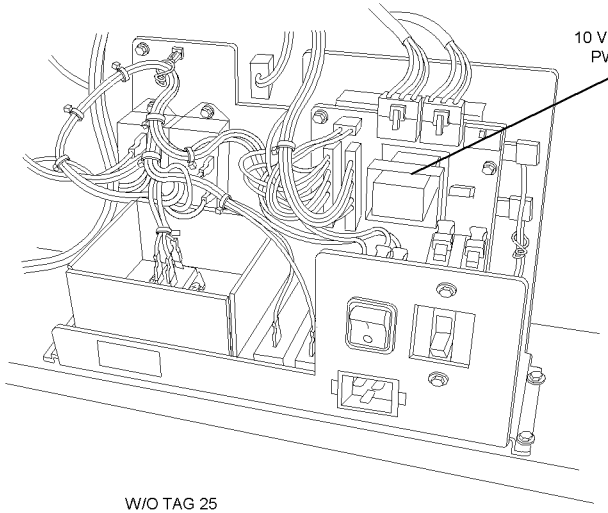


W/O TAG 25

0701004A-JAC

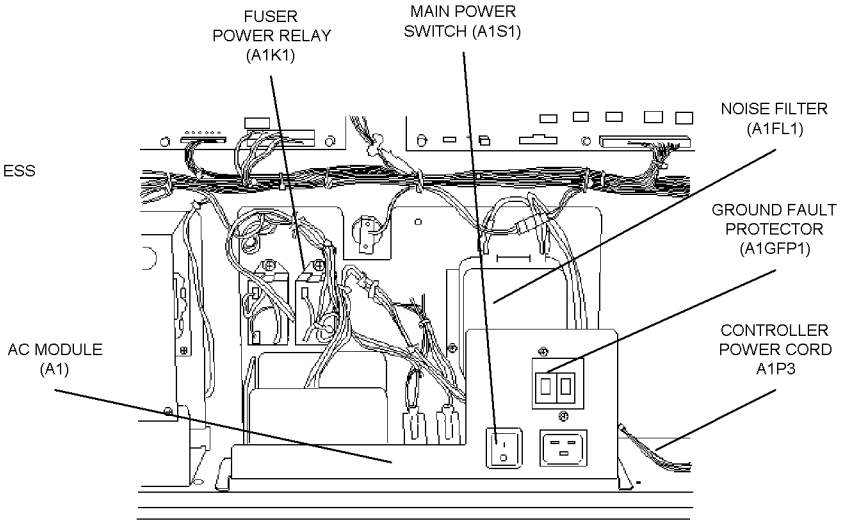


VIEW: RIGHT SIDE (BOTTOM) RN07001

# BSD1.2 Power Generation (1 of 3) (Without Tag/ MOD 25)

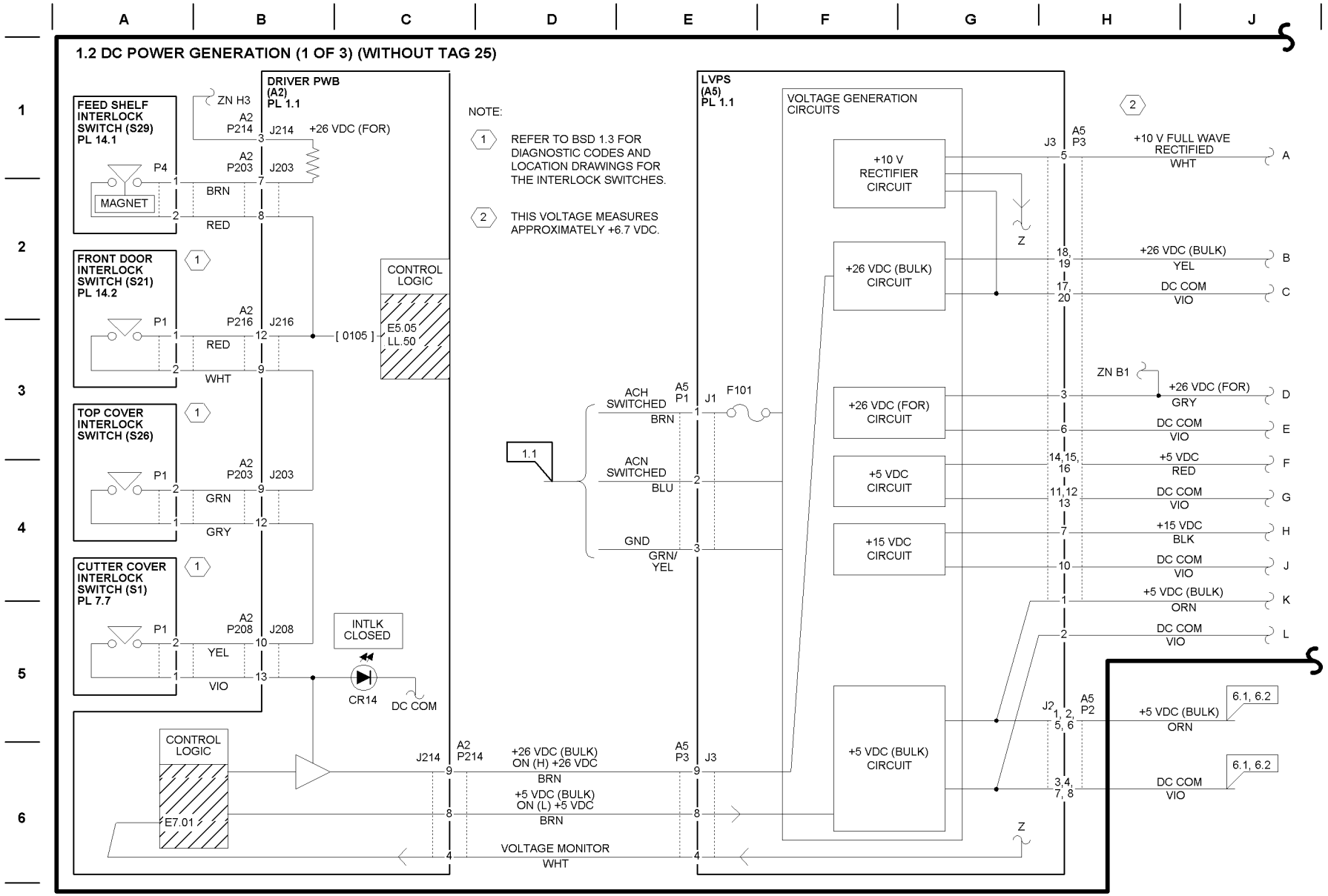

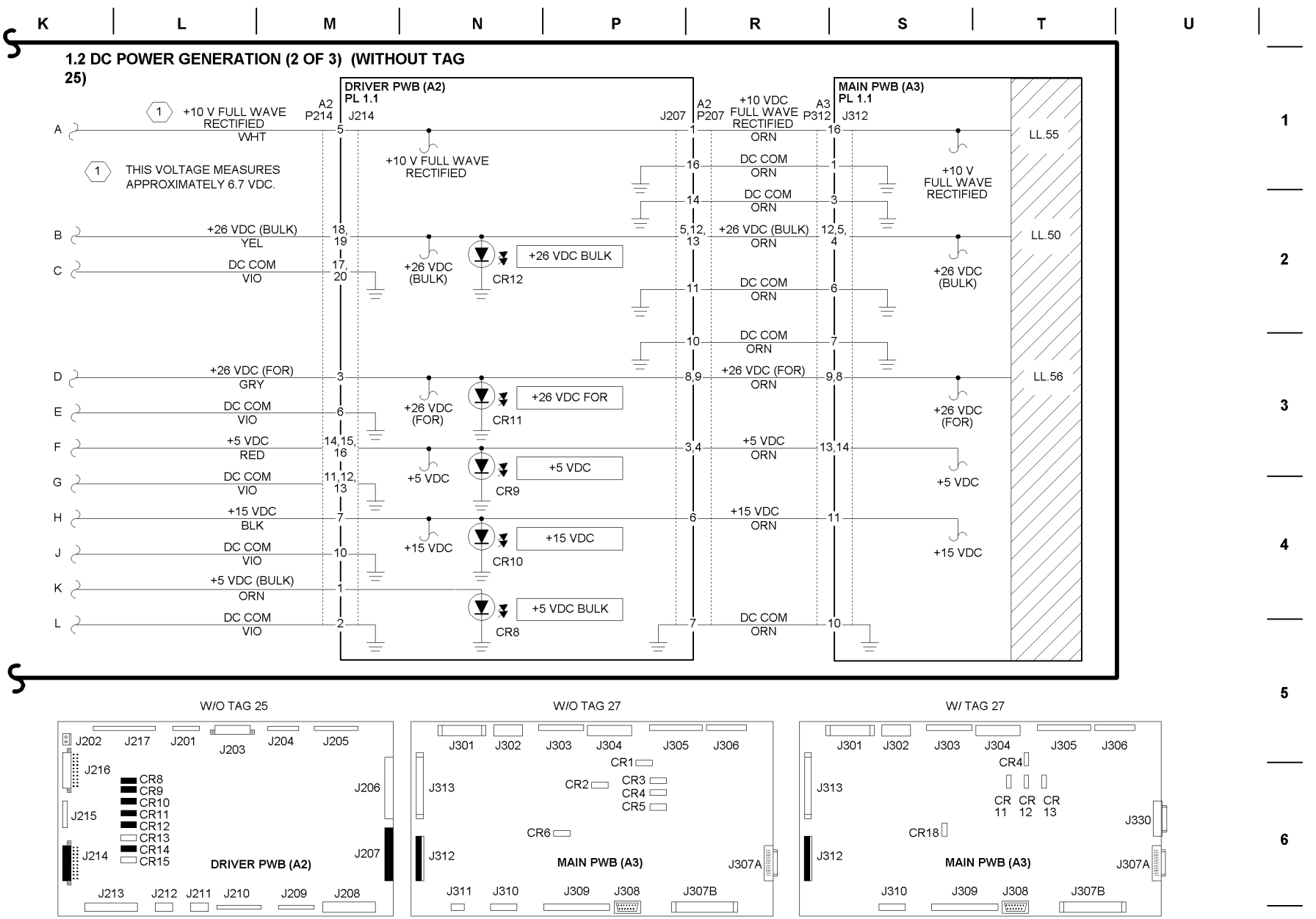
K
L
M
N
P
R
S
T
U
1.2 DC POWER GENERATION (2 OF 3) (WITHOUT TAG 25)
DRIVER PWB (A2)
PL 1.1
MAIN PWB (A3)
PL 1.1
A2 P214
J214
J207
A2 P207
A3 P312
J312
+10 V FULL WAVE RECTIFIED WHT
+10 VDC FULL WAVE RECTIFIED ORN
LL.55
THIS VOLTAGE MEASURES APPROXIMATELY 6.7 VDC.
+10 V FULL WAVE RECTIFIED
DC COM ORN
+26 VDC (BULK) YEL
+26 VDC (BULK) ORN
LL.50
+26 VDC (BULK)
+26 VDC BULK
CR12
DC COM VIO
+26 VDC (FOR) GRY
+26 VDC (FOR) ORN
LL.56
+26 VDC (FOR)
+26 VDC FOR
CR11
+5 VDC RED
+5 VDC ORN
+5 VDC
+5 VDC
CR9
+15 VDC BLK
+15 VDC ORN
+15 VDC
+15 VDC
CR10
+5 VDC (BULK) ORN
+5 VDC BULK
CR8
W/O TAG 25
W/O TAG 27
W/ TAG 27
J202 J217 J201 J203 J204 J205
J216
J215
J214
CR8 CR9 CR10 CR11 CR12 CR13 CR14 CR15
J206
J207
DRIVER PWB (A2)
J213 J212 J211 J210 J209 J208
J301 J302 J303 J304 J305 J306
CR1 CR2 CR3 CR4 CR5 CR6
J313
J312
MAIN PWB (A3)
J307A
J311 J310 J309 J308 J307B
CR4 CR 11 CR 12 CR 13 CR18
J330

## 1.2 DC POWER GENERATION (3 OF 3) (WITHOUT TAG 25)

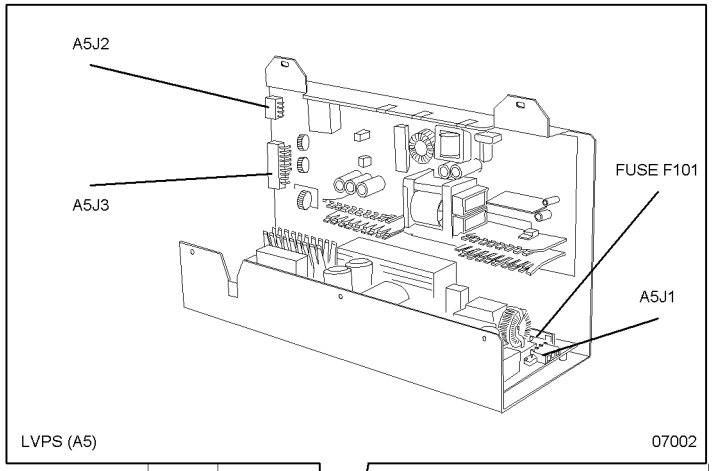


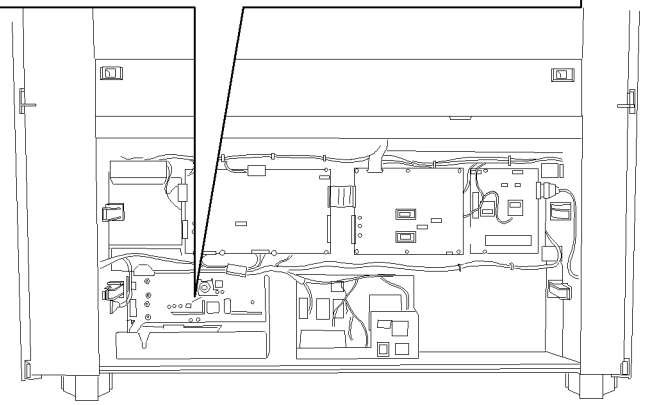


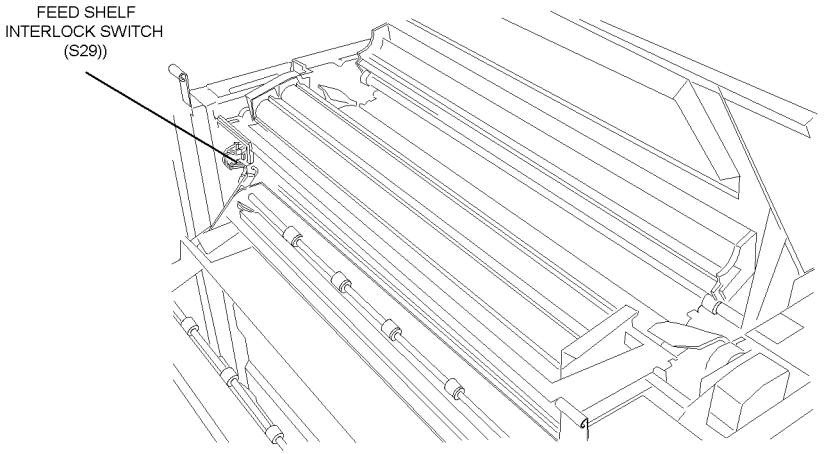

# BSD 1.2 DC Power Generation (1 of 3) (With TAG/ MOD 25) and (50 Hz With TAG/ MOD 50)

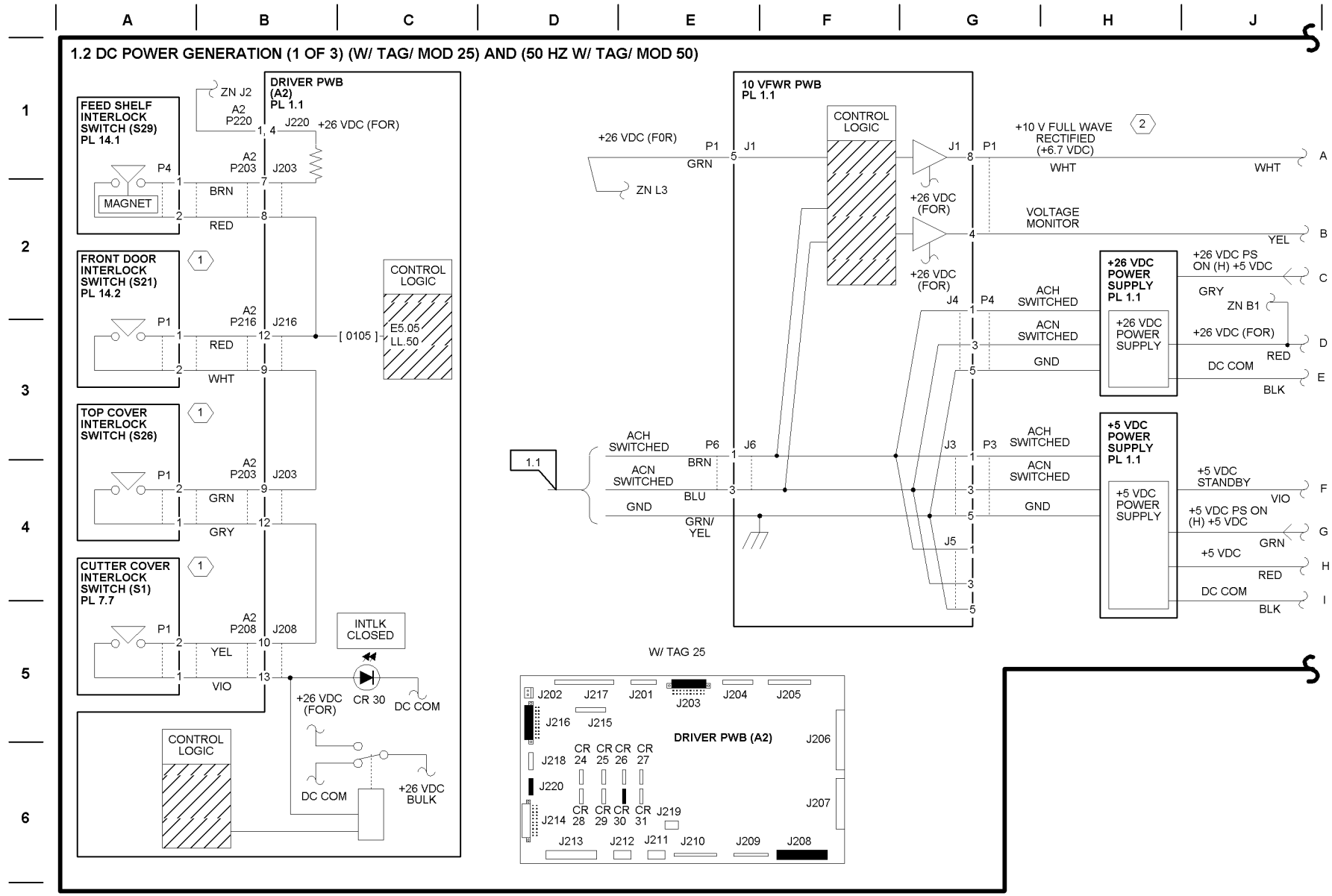

## 1.2 DC POWER GENERATION (2 OF 3) (W/ TAG/ MOD 25) AND (50 Hz W/ TAG/ MOD 50)

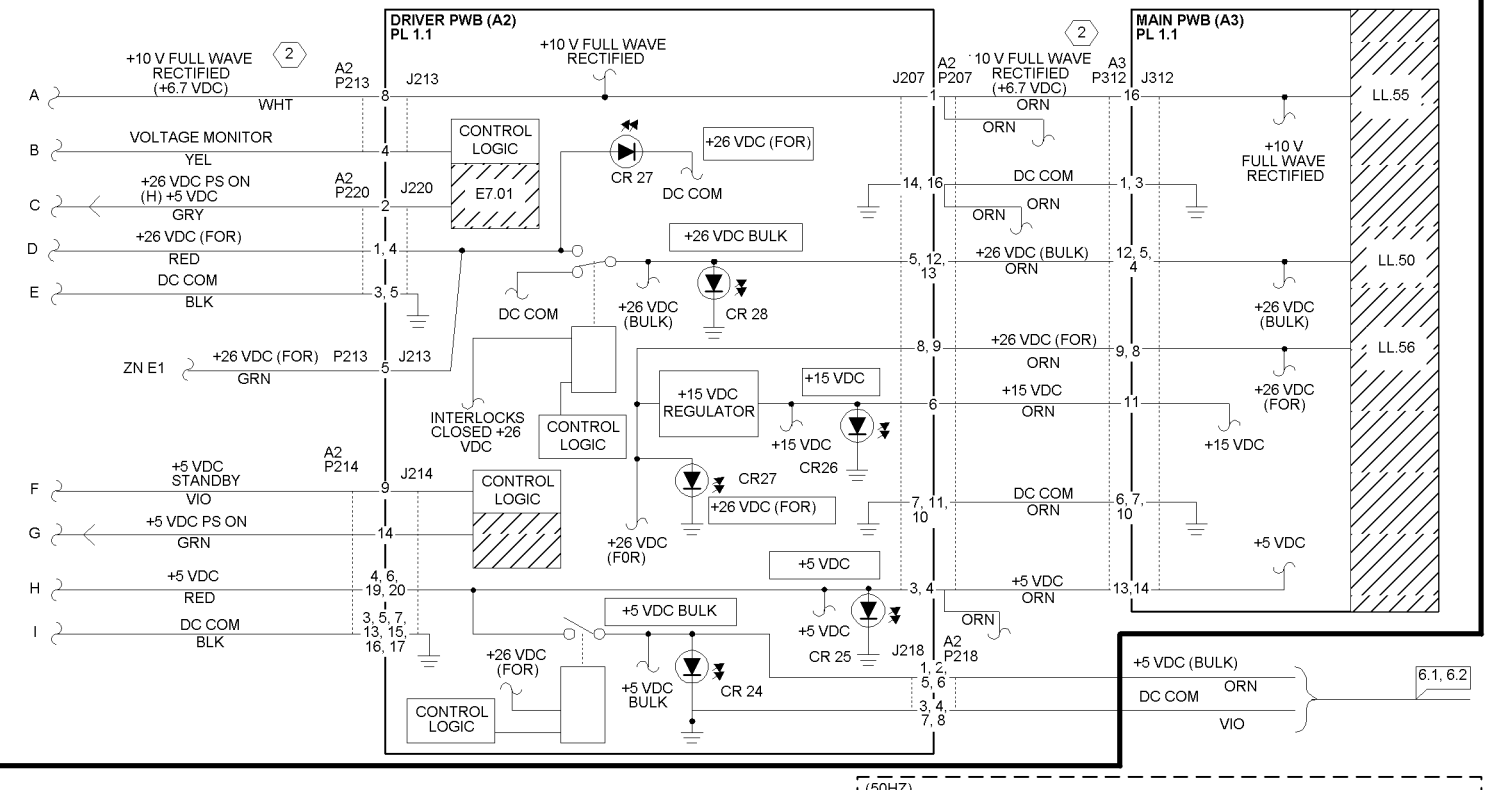


**NOTES:**

1. REFER TO BSD 1.3 FOR DIAGNOSTIC CODES AND LOCATION DRAWINGS FOR THE INTERLOCK SWITCHES.
2. THIS VOLTAGE MEASURES APPROXIMATELY +6.7 VDC.

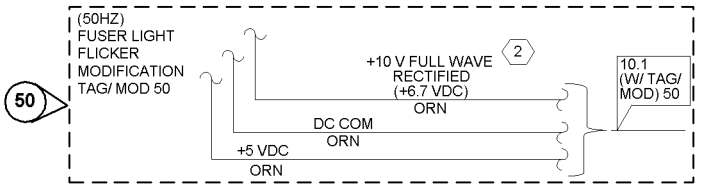


W/ TAG 25

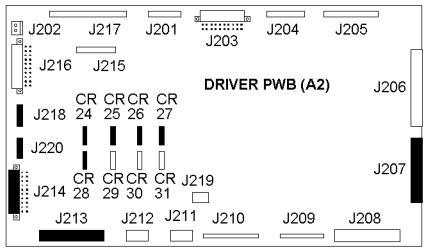


W/O TAG 27

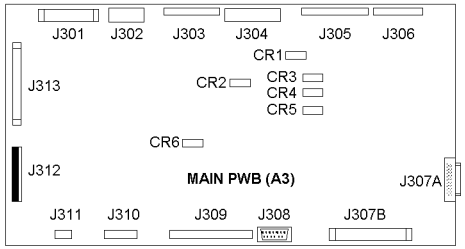


W/ TAG 27

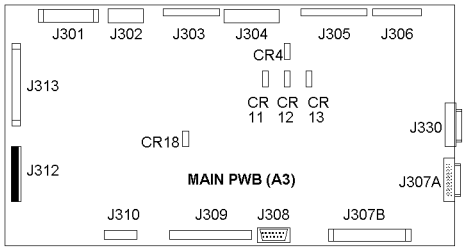

## 1.2 DC POWER GENERATION (3 OF 3) (WITH TAG/ MOD 25)

**(W/TAG/ MOD 25) AND (W/ O TAG/ MOD 50)**

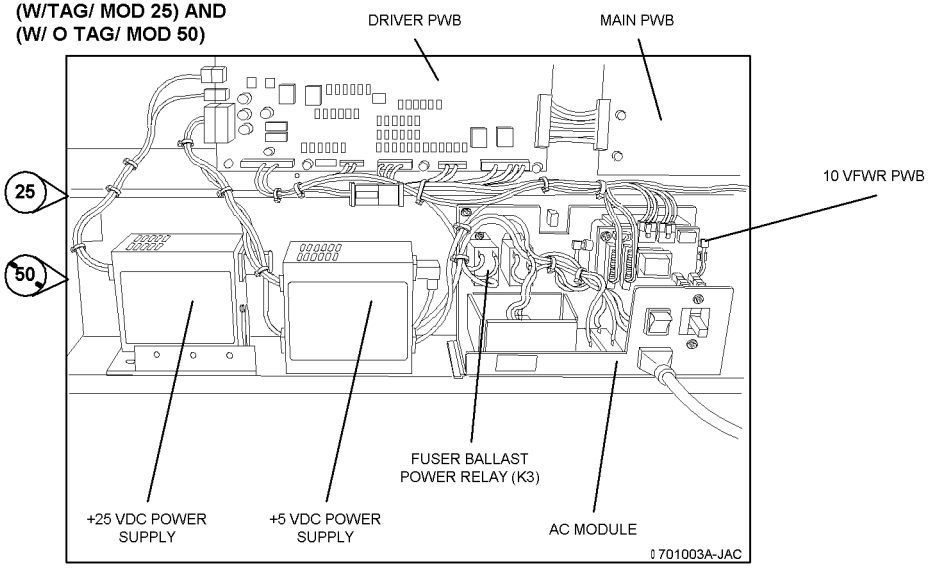


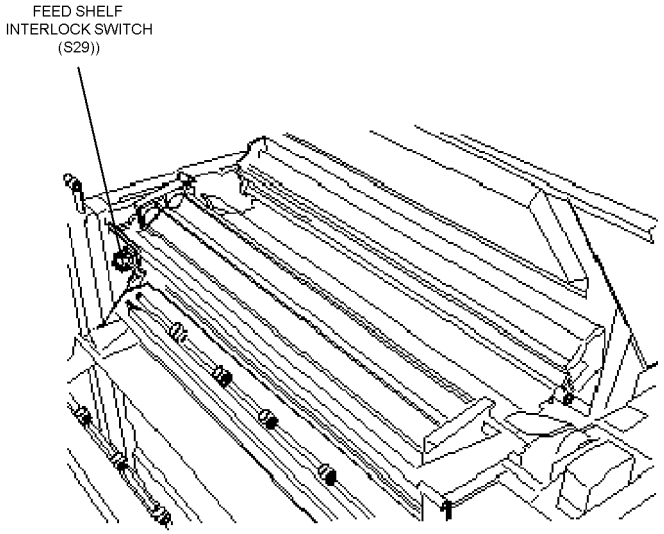


**(W/TAG/ MOD 25) AND (W/ TAG/ MOD 50)**

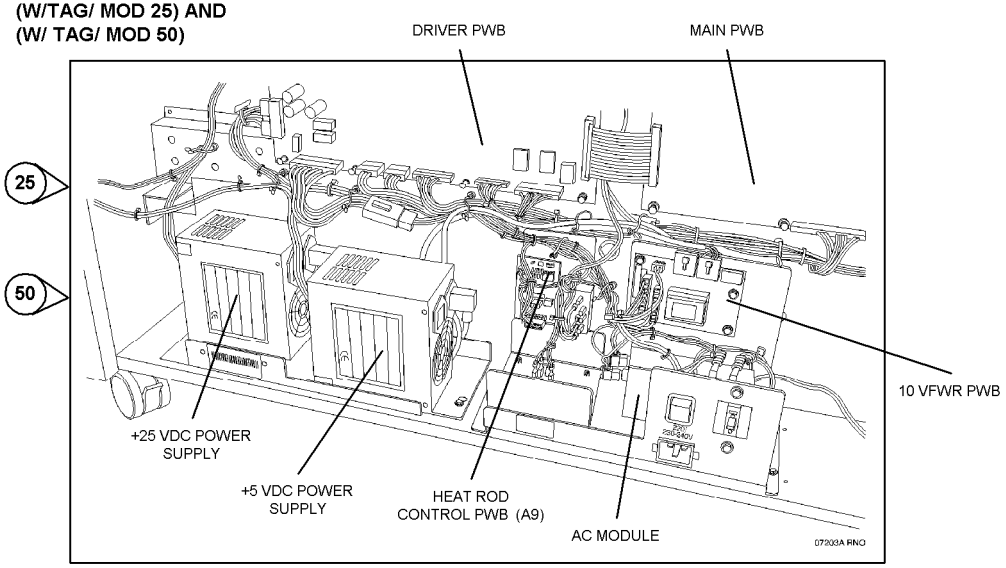

# BSD 1.2 DC Power Generation (1 of 3) (W/ Tag 25 Driver PWB Only)

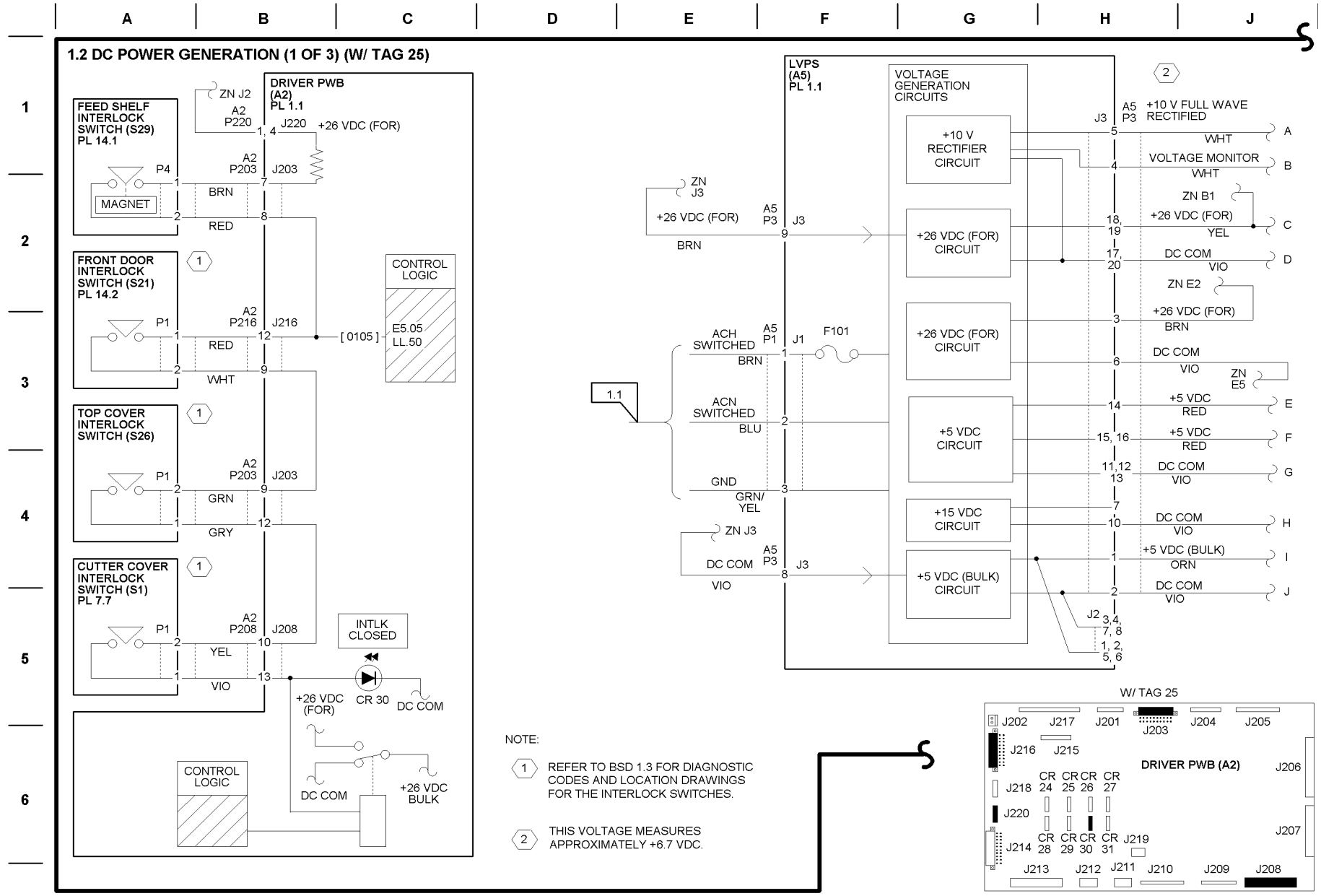

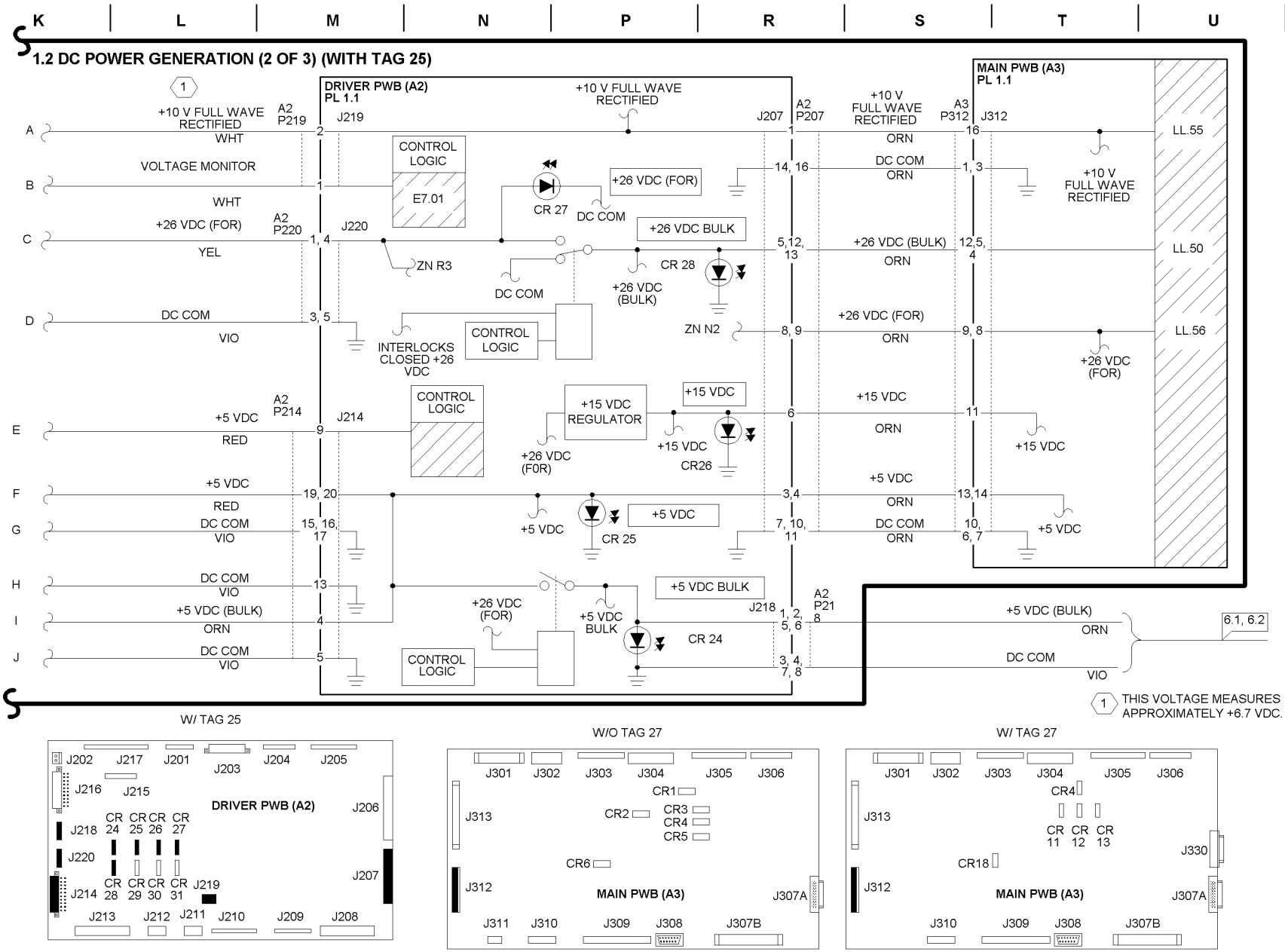
1.2 DC POWER GENERATION (2 OF 3) (WITH TAG 25)
DRIVER PWB (A2) PL 1.1
MAIN PWB (A3) PL 1.1
+10 V FULL WAVE RECTIFIED
VOLTAGE MONITOR
+26 VDC (FOR)
DC COM
+5 VDC
+5 VDC (BULK)
+26 VDC BULK
+15 VDC
+5 VDC BULK
CONTROL LOGIC
E7.01
+15 VDC REGULATOR
INTERLOCKS CLOSED +26 VDC
ZN R3
ZN N2
CR 27
CR 28
CR26
CR 25
CR 24
+26 VDC (BULK)
LL.55
LL.50
LL.56
6.1, 6.2
THIS VOLTAGE MEASURES APPROXIMATELY +6.7 VDC.
W/ TAG 25
W/O TAG 27
W/ TAG 27
DRIVER PWB (A2)
MAIN PWB (A3)

## 1.2 DC POWER GENERATION (3 OF 3) (WITH TAG 25)

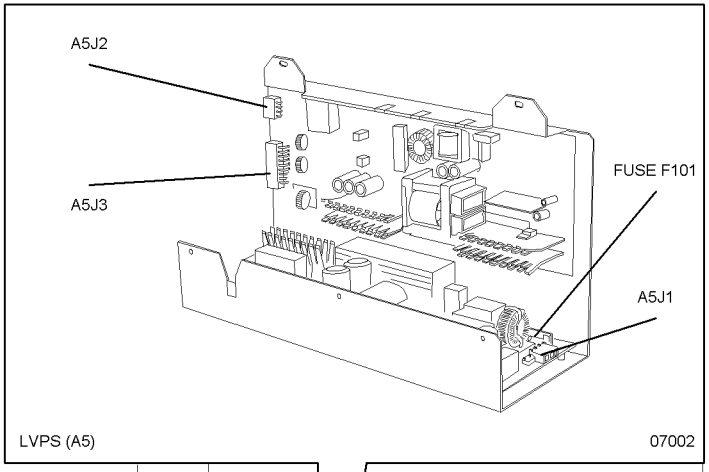


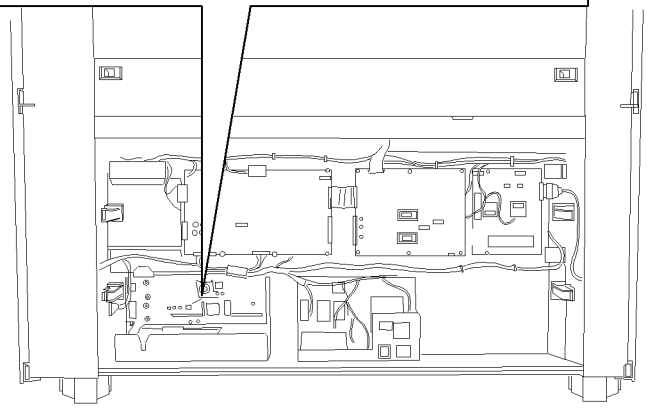


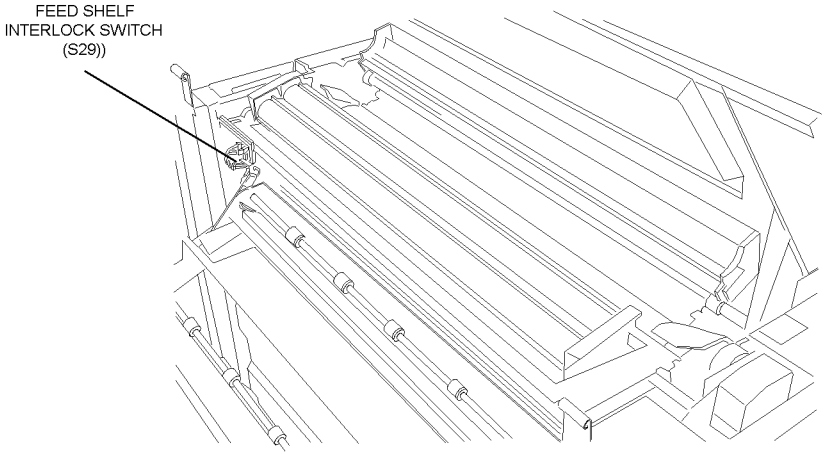

# BSD 1.2 DC Power Generation (1 of 3) (With Tag 25 and Updated Driver PWB)

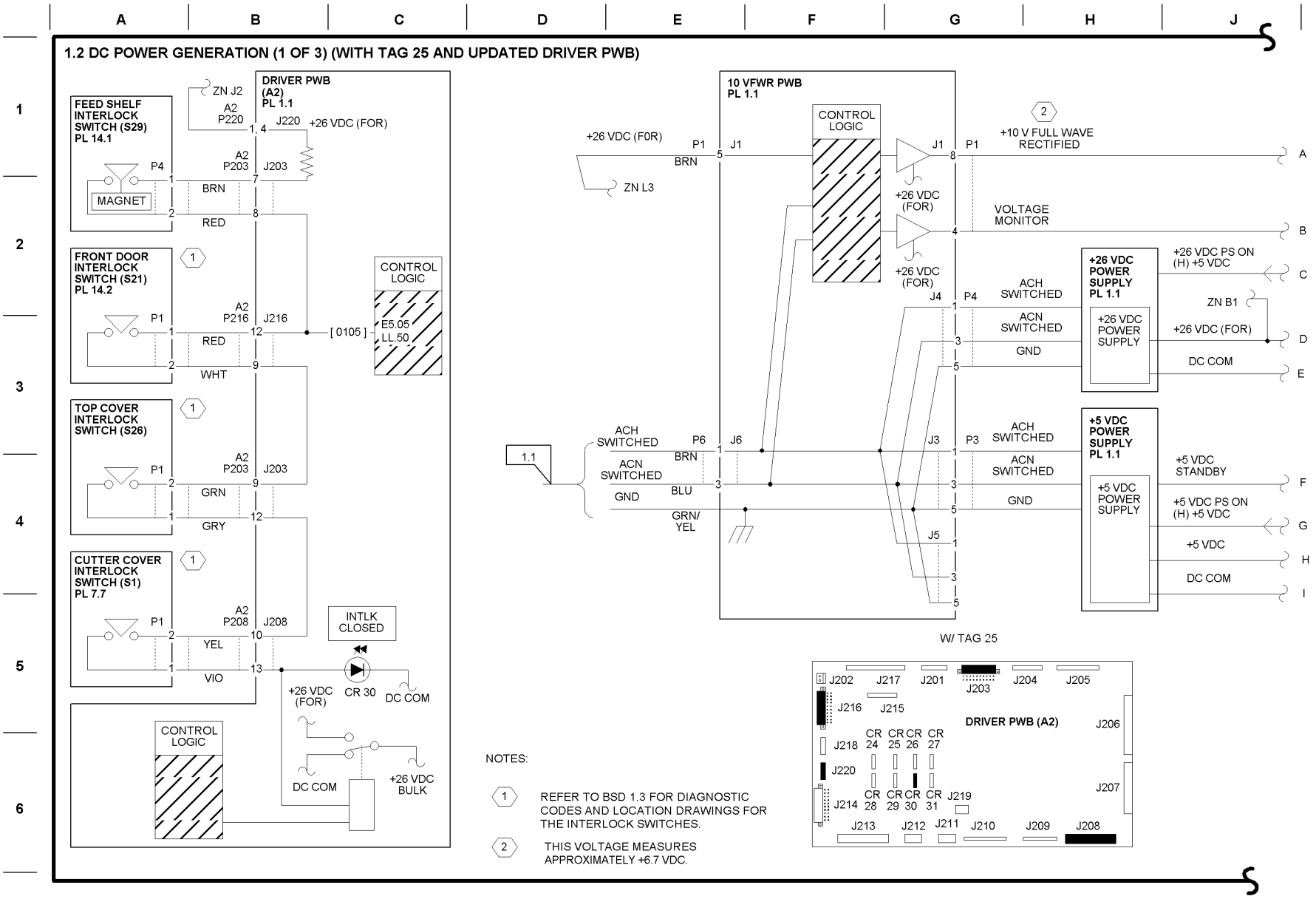

## 1.2 DC POWER GENERATION (2 OF 3) (WITH TAG 25 AND UPDATED DRIVER PWB)

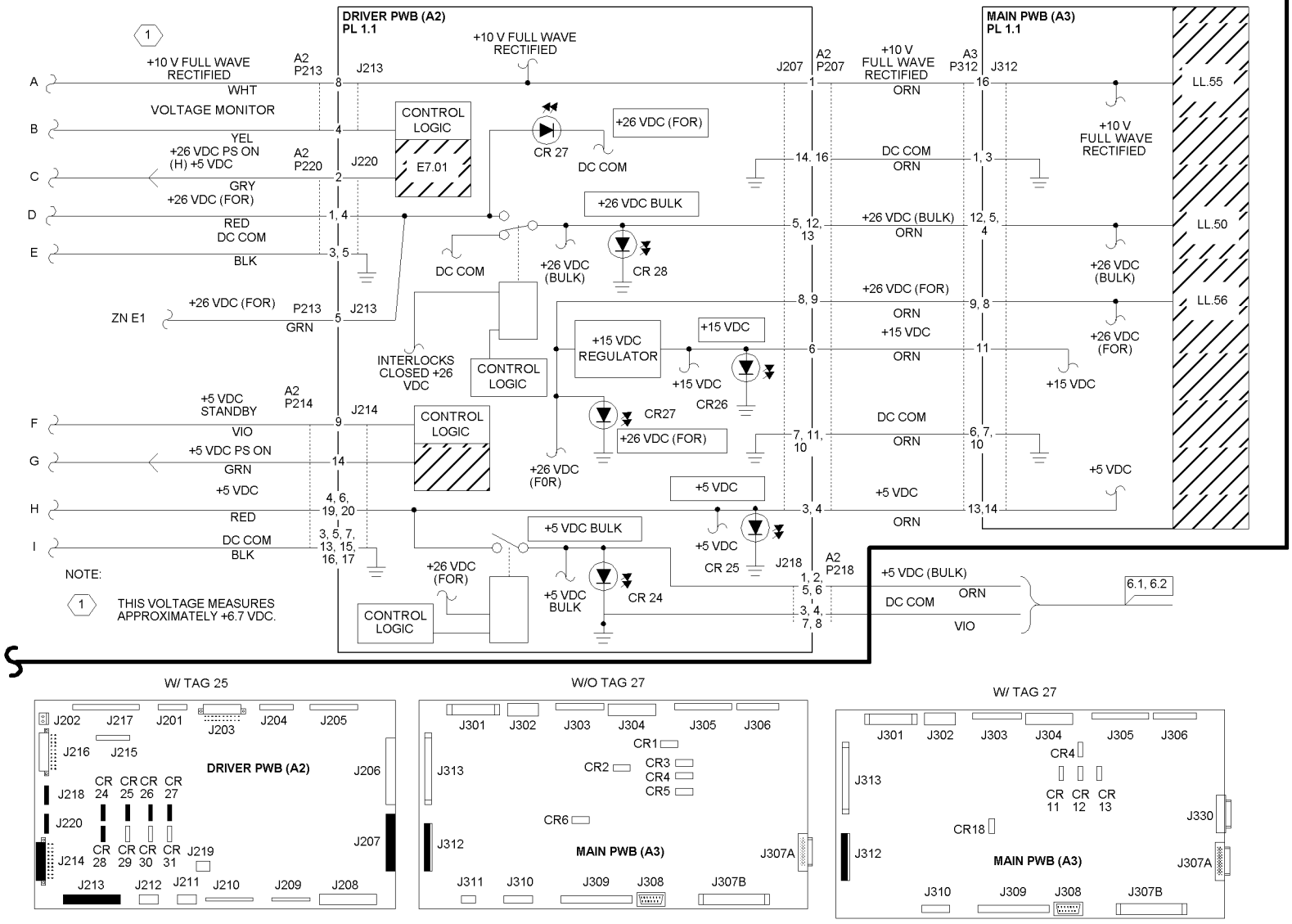

## 1.2 DC POWER GENERATION (3 OF 3) (WITH TAG/ MOD 25 AND UPDATED DRIVER PWB)

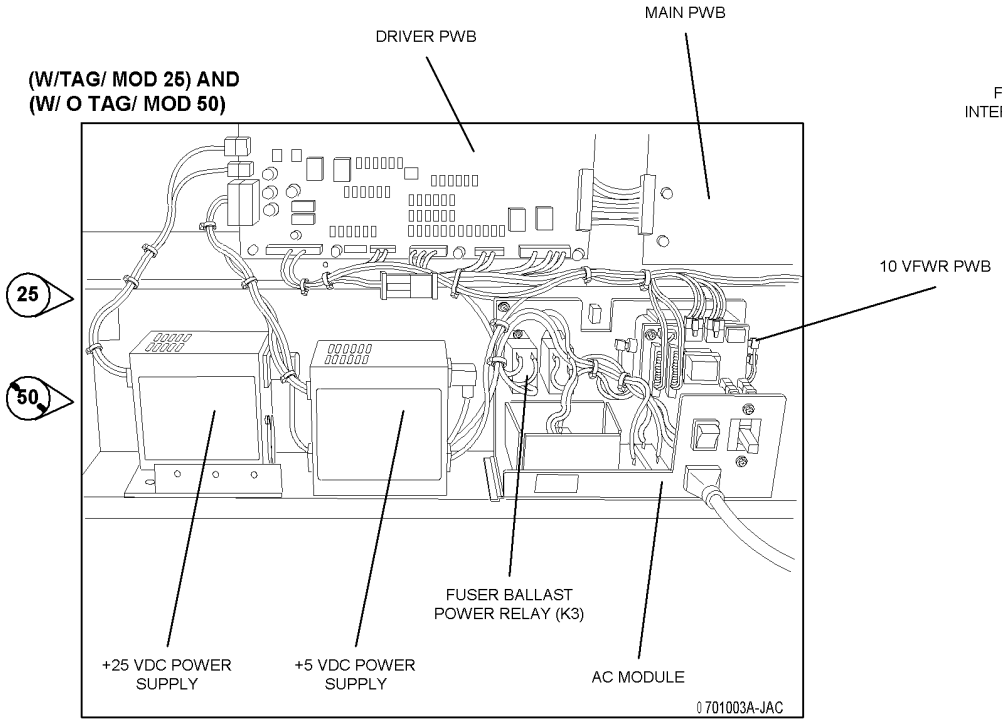


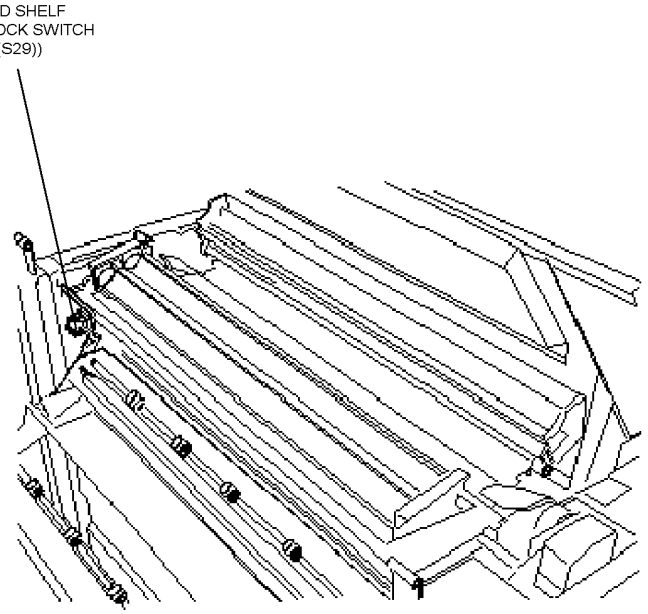


(W/TAG/ MOD 25) AND
(W/ TAG/ MOD 50)

25 50

# BSD 1.3 Interlock Monitoring

**INTERLOCK MONITORING DIAGNOSTIC CODES**

[ 0101 ] FRONT DOOR INTERLOCK SWITCH : (INPUT)

[ 0105 ] FEED SHELF INTERLOCK SWITCH: (INPUT)

[ 0106 } TOP COVER INTERLOCK SWITCH : (INPUT)

[ 0702 } CUTTER COVER INTERLOCK SWITCH : (INPUT)

W/ TAG 25

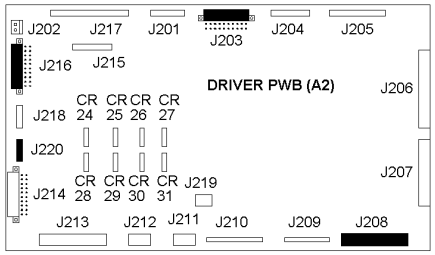


W/O TAG 25

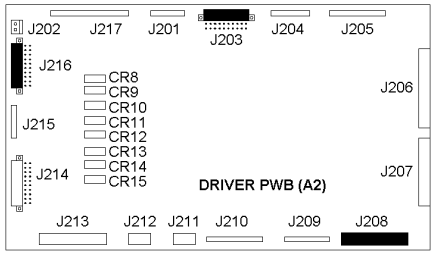


| INPUT POWER BLOCK | | |
|---|---|---|
| VOLTAGE | TEST POINT | G F |
| +26 VDC (FOR) (W/O TAG 25) | LVPS (A5) J3-3 | 1.2 |
| +26 VDC (FOR) (W/ TAG 25) | Driver (A2) A2P220-4 | 1.2 |
| DC COM (W/O TAG 25) | LVPS (A5) J3-6 | 1.2 |
| DC COM (W/ TAG 25) | Driver (A2) A2P220-6 | 1.2 |

**1.3 INTERLOCK MONITORING (1 OF 2)**

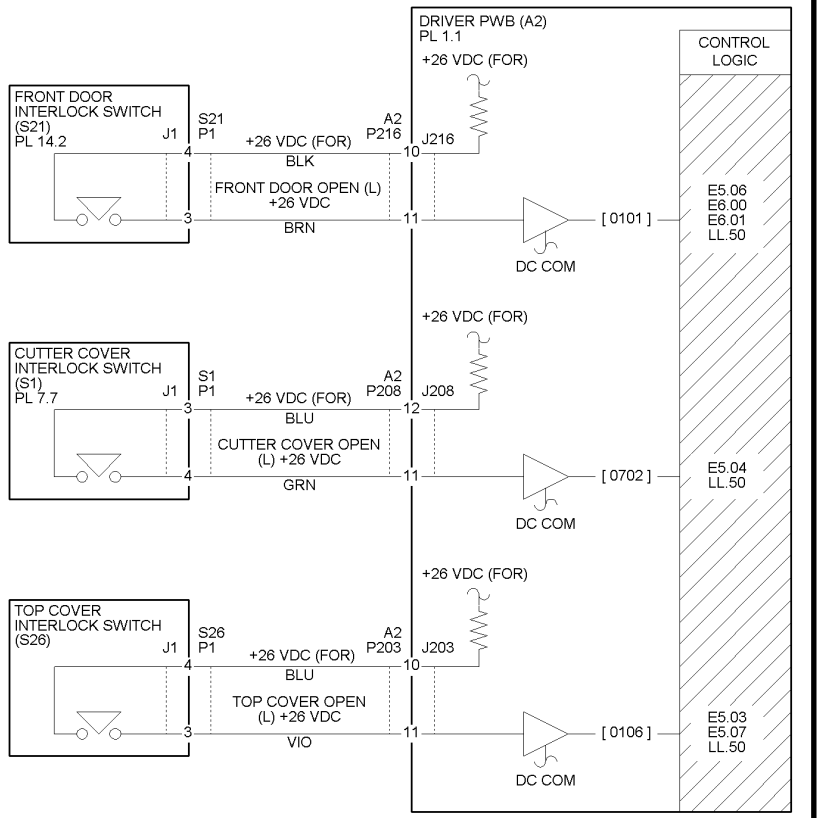

## 1.3 INTERLOCK MONITORING ( 2 OF 2 )

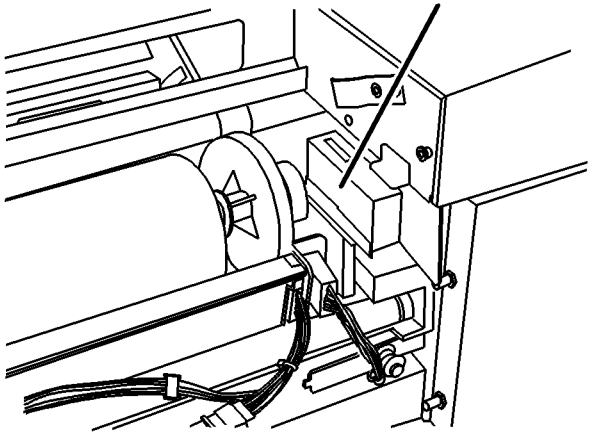


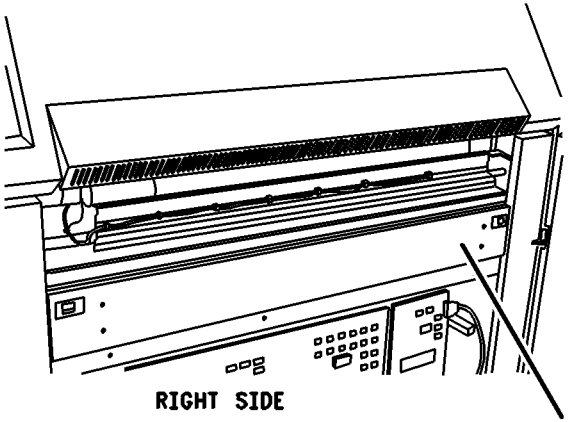


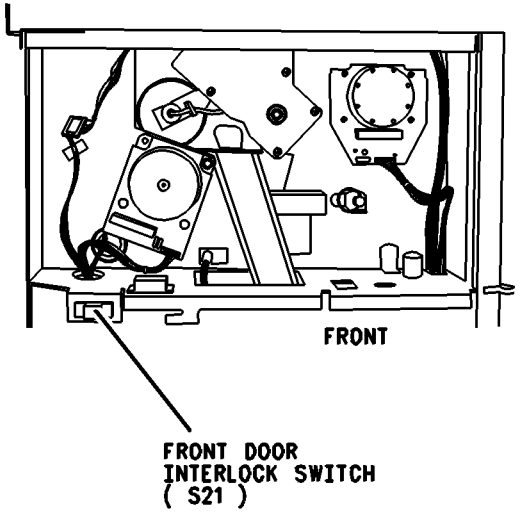

# BSD 1.4 Machine Cooling

W/ TAG 25

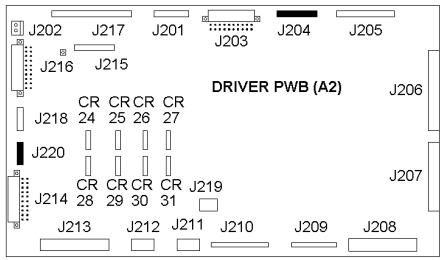


W/O TAG 25

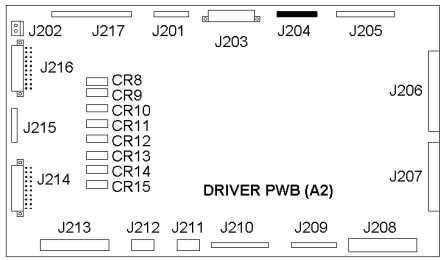


| INPUT POWER BLOCK | | |
|---|---|---|
| VOLTAGE | TEST POINT | G F |
| +26 VDC (FOR) (W/O TAG 25) | LVPS (A5) J3-3 | 1.2 |
| +26 VDC (FOR) (W/ TAG 25) | Driver (A2) A2P220-4 | 1.2 |
| DC COM (W/O TAG 25) | LVPS (A5) J3-6 | 1.2 |
| DC COM (W/ TAG 25) | Driver (A2) A2P220-6 | 1.2 |

## 1.4 MACHINE COOLING (1 OF 1)

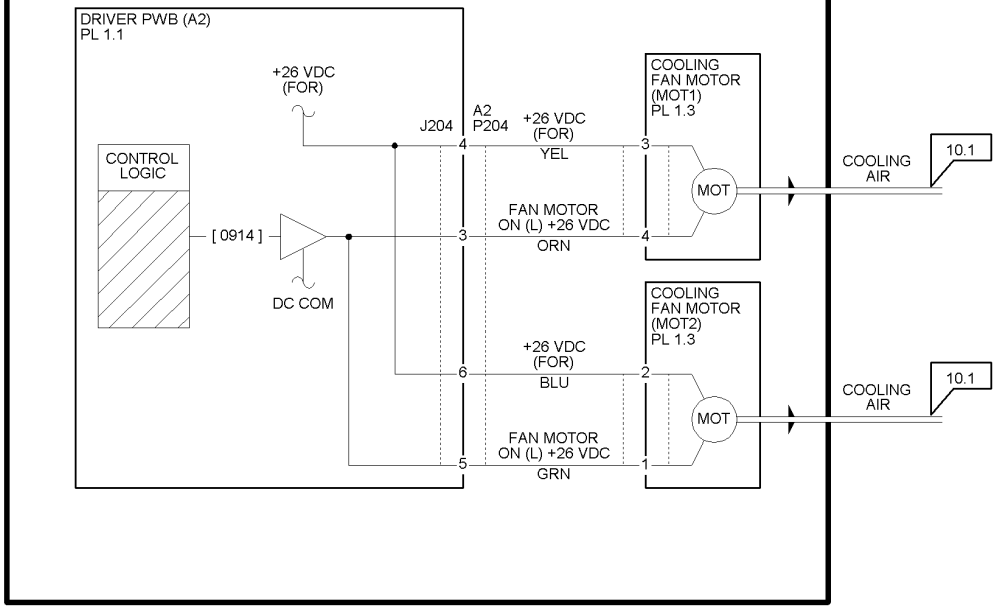


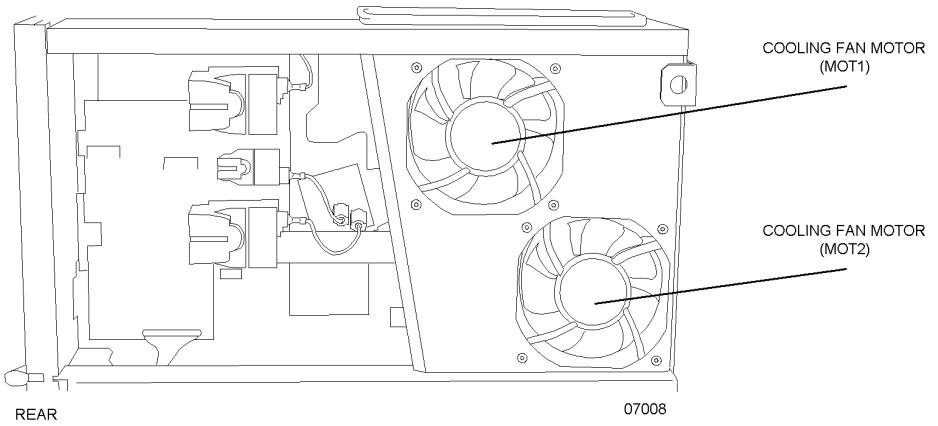

# BSD 2.1 Mode Selection

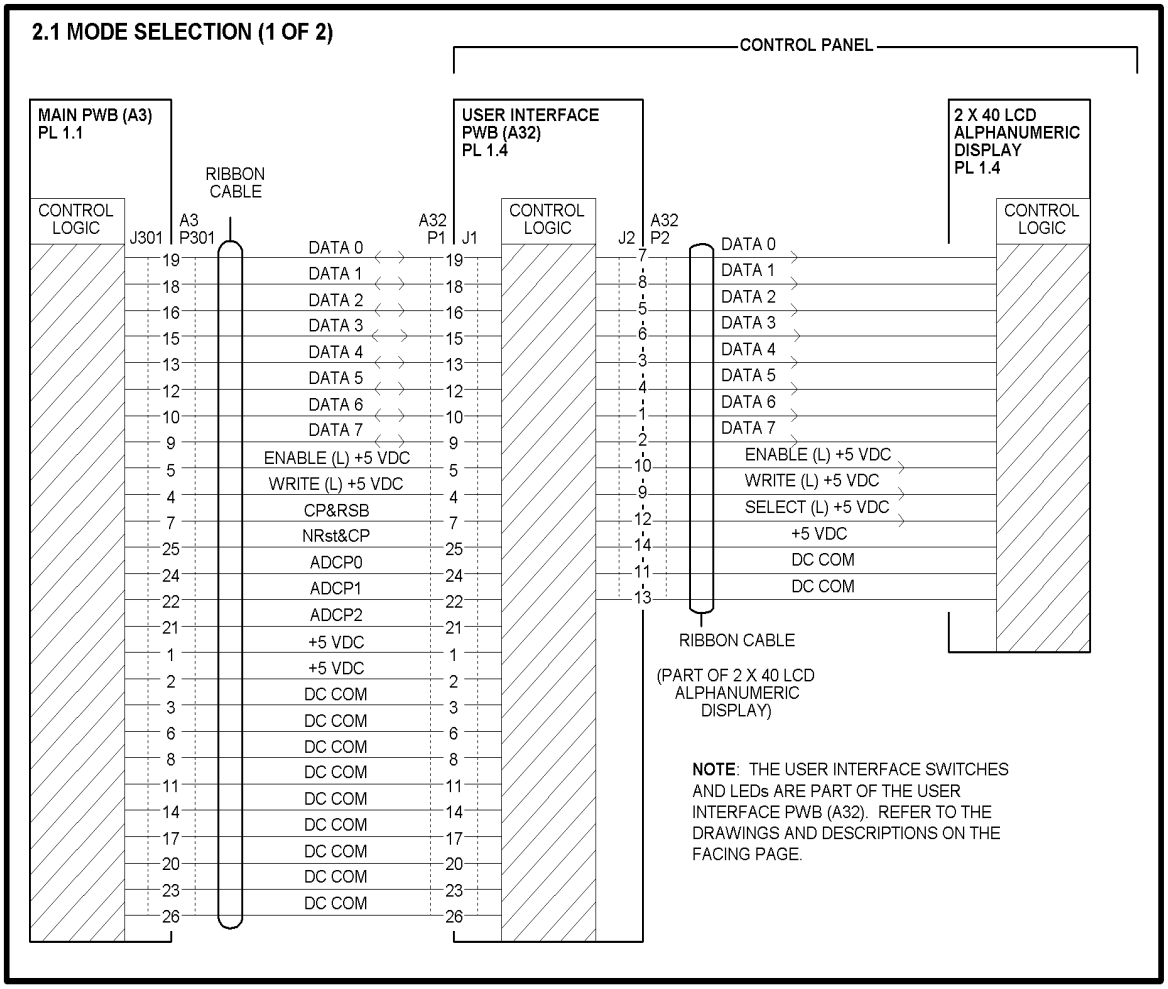


| INPUT POWER BLOCK | | |
|---|---|---|
| VOLTAGE | TEST POINT | G F |
| +5 VDC (BULK) (W/O TAG 25) | LVPS (A5) J2-1 | 1.2 |
| +5 VDC (BULK) (W/ TAG 25) | Driver (A2) A2P218-1 | 1.2 |
| DC COM (W/O TAG 25) | LVPS (A5) J2-3 | 1.2 |
| DC COM (W/ TAG 25) | Driver (A2) A2P218-3 | 1.2 |

W/ TAG 25

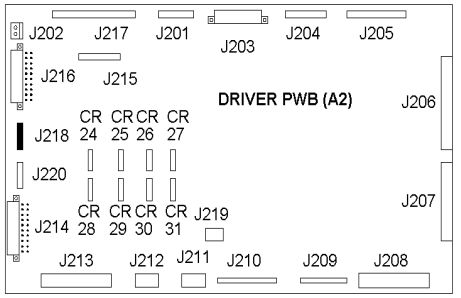


W/ TAG 27

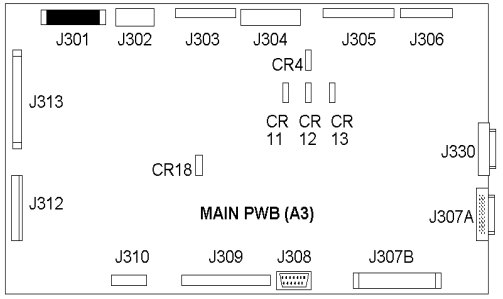


W/O TAG 27

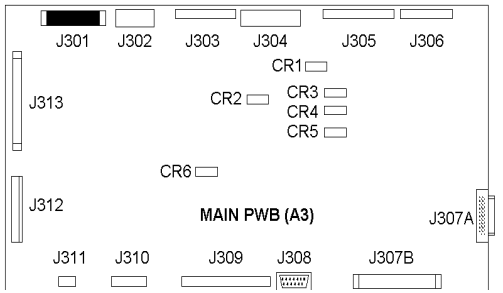

## 2.1 MODE SELECTION (2 OF 2)

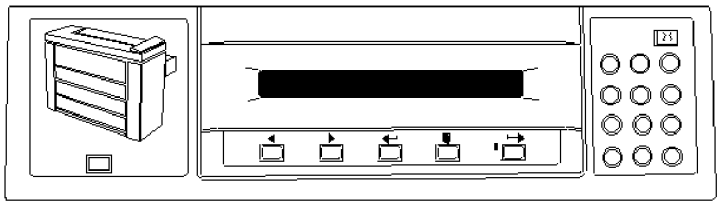

CONTROL PANEL 07009

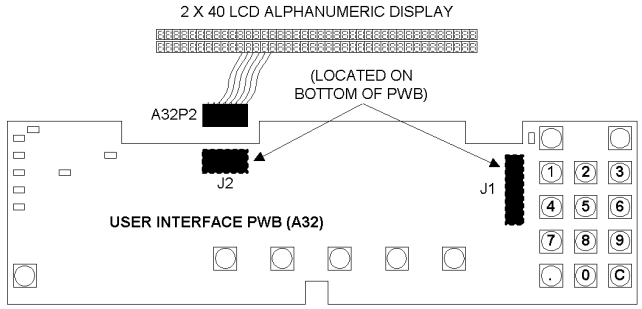


MODE SELECTION DIAGNOSTIC CODES

[ 0201 ] DISPLAY TEST: CHECKS EACH SEGMENT OF THE LCD, ONE SEGMENT AT A TIME.

[ 0202 ] KEYBOARD TEST: AS EACH KEY IS PRESSED, THE FOLLOWING VALUE SHOULD BE DISPLAYED:

| KEY | DISPLAY | KEY | DISPLAY |
|---|---|---|---|
| 1 | 01H | 0 | 00H |
| 2 | 02H | MEDIA | 11H |
| 3 | 03H | ON LINE | 12H |
| 4 | 04H | PREVIOUS | 13H |
| 5 | 05H | NEXT | 14H |
| 6 | 06H | ENTER | 15H |
| 7 | 07H | (NOT USED) | 16H |
| 8 | 08H | C | 17H |
| 9 | 09H | . | 18H |

[ 0203 ] BILLING METER COUNT: INCREMENTS BILLING METER COUNT.

[ 0210 ] LED TEST: LIGHTS ALL LEDS AT THE SAME TIME.

[ 0211 ] MESSAGE ROM TEST: RETURNS A CODE INDICATING WHICH MESSAGE ROMS ARE GOOD AS FOLLOWS (X = GOOD ROM):

| RESULT CODE | 0 | 1 | 2 | 3 |
|---|---|---|---|---|
| ROM 1 GOOD | | X | | X |
| ROM 2 GOOD | | | X | X |

NOTE: THE DESIRED RESULT CODE IS 3 (BOTH ROMS GOOD).

[ 0261 ] MACHINE CONFIGURATION (NVM):
0 = 115 V
1 = 240V
2 = 220V

[ 0263 ] BILLING TYPE: SELECTS ENGLISH OR METRIC.
0 = FEET
1 = METRIC

# BSD 3.1 Machine Run Control

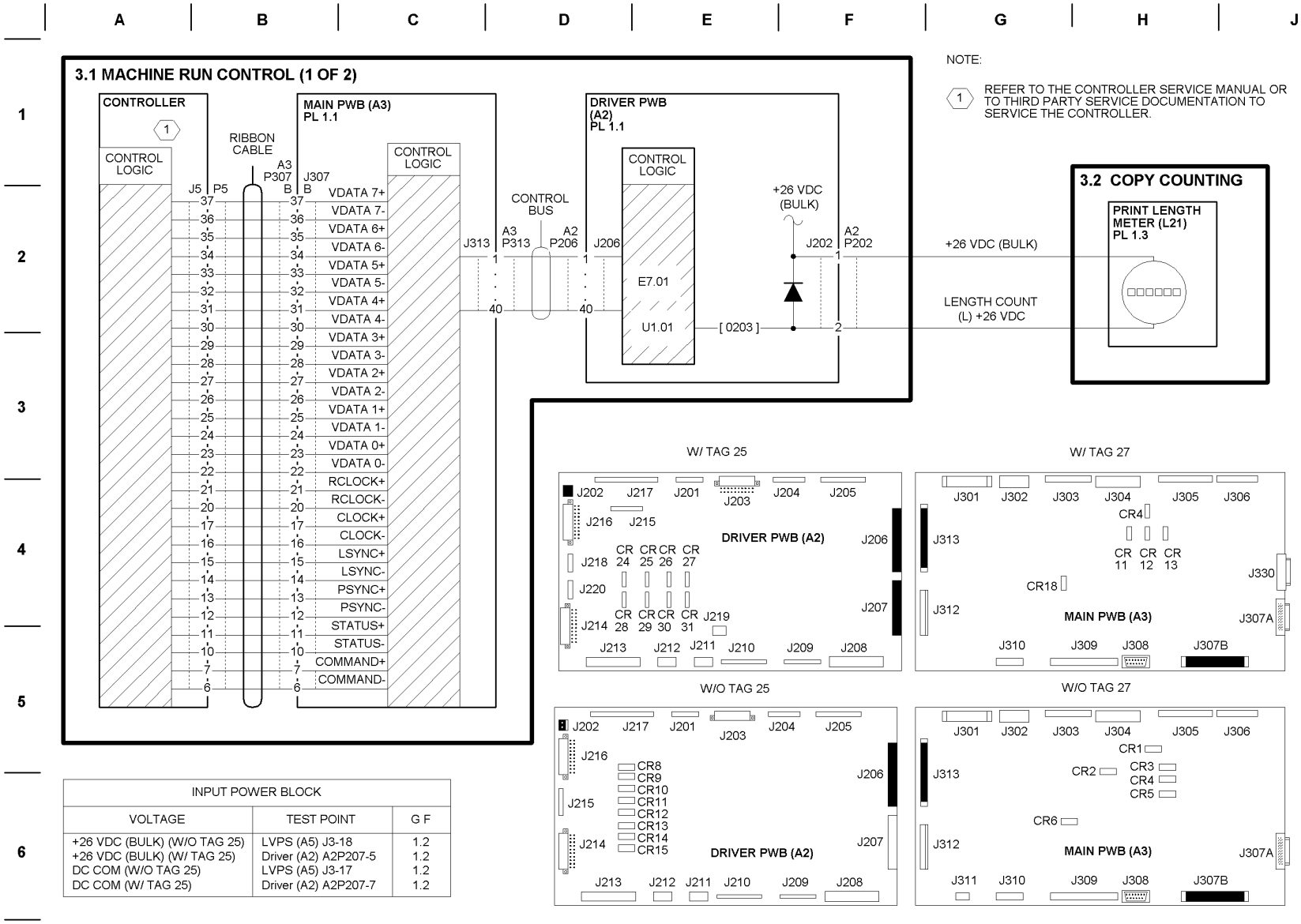


| INPUT POWER BLOCK | | |
|---|---|---|
| VOLTAGE | TEST POINT | G F |
| +26 VDC (BULK) (W/O TAG 25) | LVPS (A5) J3-18 | 1.2 |
| +26 VDC (BULK) (W/ TAG 25) | Driver (A2) A2P207-5 | 1.2 |
| DC COM (W/O TAG 25) | LVPS (A5) J3-17 | 1.2 |
| DC COM (W/ TAG 25) | Driver (A2) A2P207-7 | 1.2 |

## 3.1 MACHINE RUN CONTROL (2 OF 2)

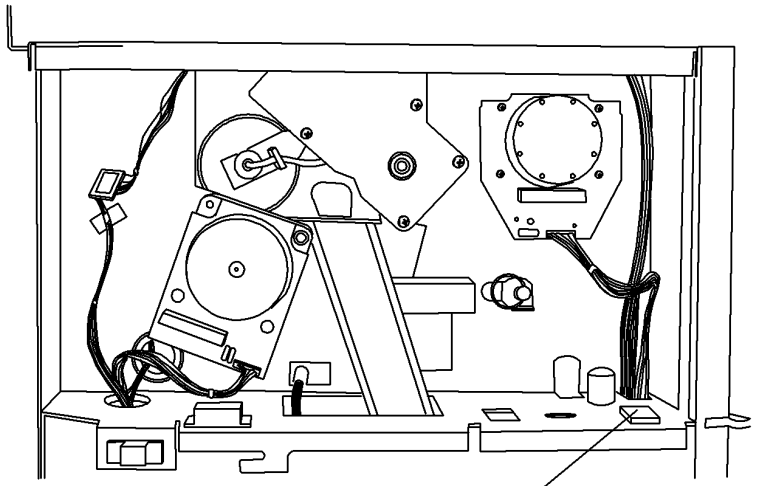


MACHINE RUN CONTROL DIAGNOSTIC CODES

[ 0203 ] BILLING METER: OUTPUT

[ 0300 ] JUMP 0: RESTARTS THE IOT.

[ 0360 ] NVM RESET TO NOMINAL NVM:

[ 1 ]. RESETS ALL OF THE BASIC NVM TO NOMINAL FOR A US MARKET CONFIGURATION (DOES NOT AFFECT THE AUDITRON ACCOUNTS). IT REQUIRES ENTER TO CONFIRM.

[ 2 ]. ALLOWS THE TECH REP TO SEE AND THEN CHANGE THE ELECTRONIC BILLING METER TO ANY DESIRED VALUE. IT REQUIRES ENTER TO CONFIRM THE NEW VALUE AND AFFECTS THE THREE LOCATIONS OF THE NVM LOCATION PRINT_COUNTER.

[ 3 ]. RESETS ALL OF THE BASIC NVM TO NOMINAL CONDITION FOR AN E0, 220 VOLT MACHINE (DOES NOT AFFECT THE AUDITRON ACCOUNTS). IT REQUIRES START TO CONFIRM AND IS IDENTICAL TO [ 1 ] ABOVE EXCEPT FOR THE FOLLOWING LOCATIONS: 21, 22, 23, 29, 99, AND 9A.

AFTER RESETTING NVM TO NOMINAL VALUES, THE TECH REP SHOULD EXECUTE [ 1031 ] TO UPDATE OILER WEB COUNTERS IF THE INSTALLED WEB IS NOT NEW.

[ 0361 ] WATCH DOG TIMER: RESTARTS THE IOT.

[ 0362 ] TIMEOUT INTERVAL FOR EXITING DIAGNOSTICS .

[ 0363 ] NVM RESET: RESETS TO NOMINAL THE LOCATIONS THAT DO NOT MATCH BETWEEN DATA AND SHADOW.

[ 0364 ] NVM RESET: RESETS CHECKSUM (DOES NOT AFFECT NVM DATA).

[ 0365 ] NVM PRINTOUT: PRINTS OUT THE ENTIRE CONTENTS OF NVM (IN HEX FORMAT). THE BAUD RATE IS DEPENDENT UPON NVM.

[ 0391 ] SERVICE EVENT DISPLAY: DISPLAYS THE LAST 20 EVENTS THAT HAVE OCCURRED ON THE LCD DISPLAY. AN EVENT IS DEFINED AS A FAULT, A POWER-UP OF THE IOT, OR A DIAGNOSTIC POWER-UP OF THE IOT. THE INFORMATION THAT IS DISPLAYED INCLUDES HOW MANY EVENTS AGO, THE EVENT NUMBER IN A HUMAN READABLE FORM (C1.XX OR "NORM POWER UP" OR "DIAG POWER UP"), AND THE BILLING METER AT THE TIME OF THAT EVENT.

[0392 ] SERVICE HISTORY DISPLAY: DISPLAYS THE EVENT NUMBERS, AS WELL AS THE TOTALS FOR EACH EVENT. ONLY THOSE EVENTS WHICH HAVE OCCURRED WILL BE DISPLAYED. IN A HUMAN-READABLE FORM.

YOU WILL BE PRESENTED WITH THE BILLING METER COUNT AT WHICH THE HISTORY WAS LAST CLEARED. YOU WILL BE ABLE TO SCROLL THROUGH THE LIST OF EVENTS USING THE NEXT AND PREVIOUS KEY. WHEN EXITING FROM THIS DIAGNOSTIC, YOU WILL BE PROMPTED TO CLEAR THE FAULT HISTORY. IF YOU CHOOSE TO CLEAR THE FAULT HISTORY, THE CURENT BILLING METER WILL BE RECORDED AND PRESENTED THE NEXT TIME [ 0392 ] IS RUN.

# BSD 4.1 Fuser Roll Drive

| INPUT POWER BLOCK | | |
|---|---|---|
| VOLTAGE | TEST POINT | G F |
| +26 VDC (BULK) (W/O TAG 25) | LVPS (A5) J3-18 | 1.2 |
| +26 VDC (BULK) (W/ TAG 25) | Driver (A2) A2P207-5 | 1.2 |
| DC COM (W/O TAG 25) | LVPS (A5) J3-17 | 1.2 |
| DC COM (W/ TAG 25) | Driver (A2) A2P207-7 | 1.2 |
| +5 VDC (W/O TAG 25) | LVPS (A5) J3-14 | 1.2 |
| +5 VDC (W/ TAG 25) | Driver (A2) A2P214-4 | 1.2 |
| DC COM (W/O TAG 25) | LVPS (A5) J3-11 | 1.2 |
| DC COM (W/ TAG 25) | Driver (A2) A2P214-3 | 1.2 |

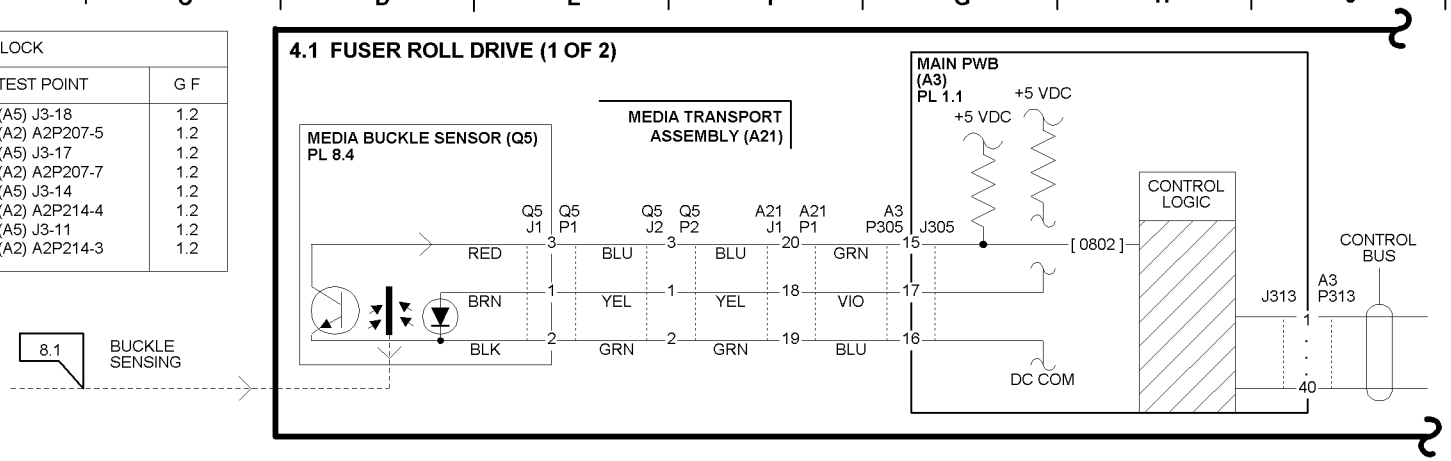


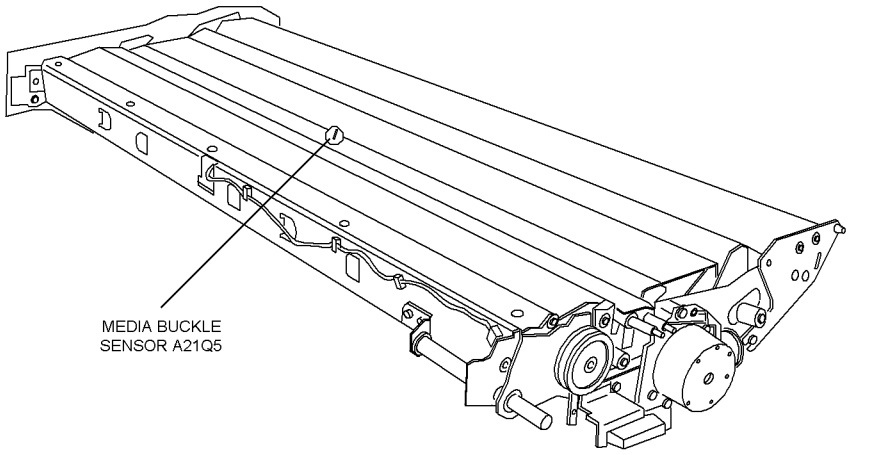


PHOTO #9RM04

W/ TAG 27

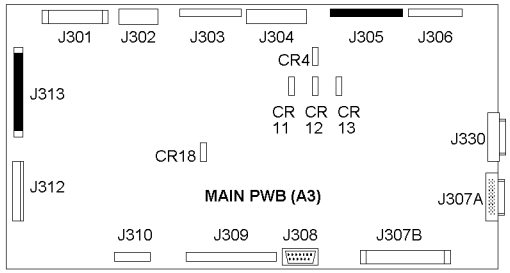


W/O TAG 27

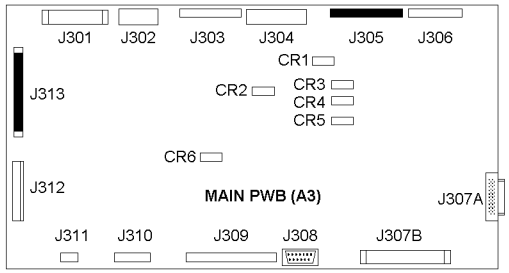

## 4.1 FUSER ROLL DRIVE (2 OF 2)

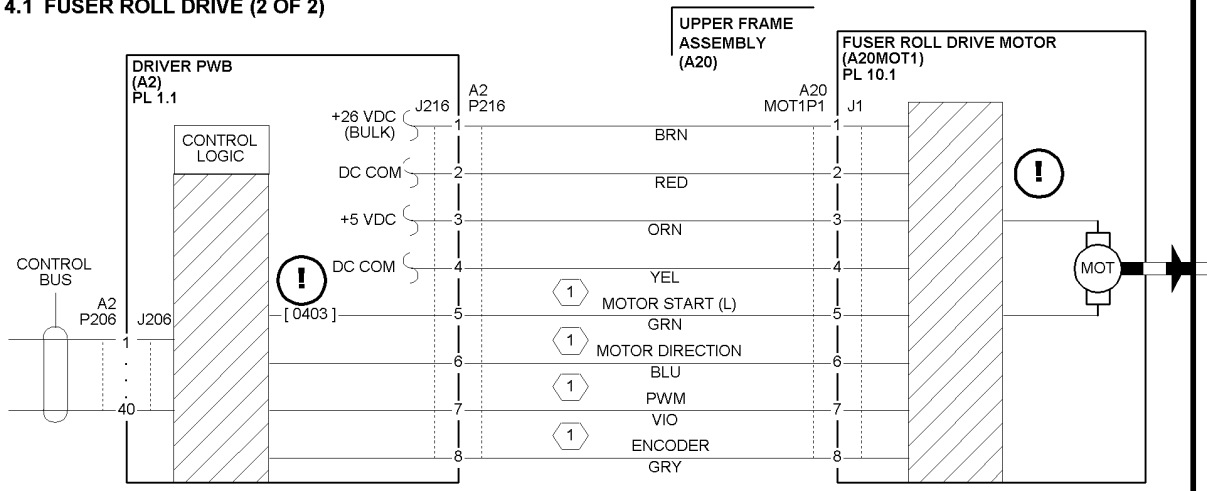


CAUTION: DO NOT RUN DIAGNOSTIC CODE [ 0403 ] IF THE FUSER IS COLD. MACHINE DAMAGE CAN OCCUR. DIAGNOSTIC CODE [ 0403 ] RUNS THE FUSER MOTOR, THE DEVELOPER MOTOR, AND THE PHOTORECEPTOR MOTOR. THE FUSER HEATER IS TURNED OFF WHILE IN THE DIAGNOSTIC MODE.

1 THE FOLLOWING VOLTAGES SHOULD BE PRESENT:

| SIGNAL | MEASURED VOLTAGE | |
|---|---|---|
| | IN STDBY | IN PRINT |
| MOTOR START (L) | +1.7 VDC | 0.0 VDC |
| MOTOR DIRECTION | +4.2 VDC | 0.0 VDC |
| PWM | +4.5 VDC | +1.8 VDC |
| ENCODER | 0.0 VDC | +2.4 VDC |

W/ TAG 25

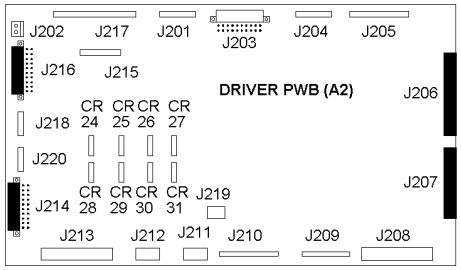


W/O TAG 25

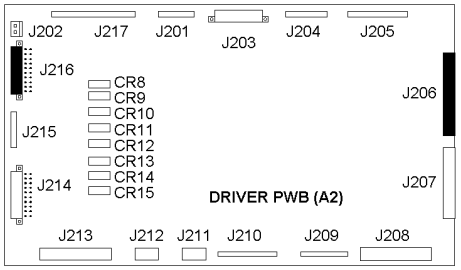


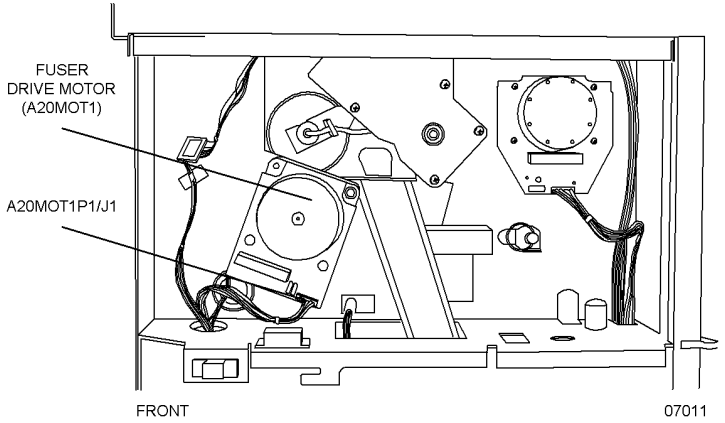

# BSD 4.2 Developer Drive

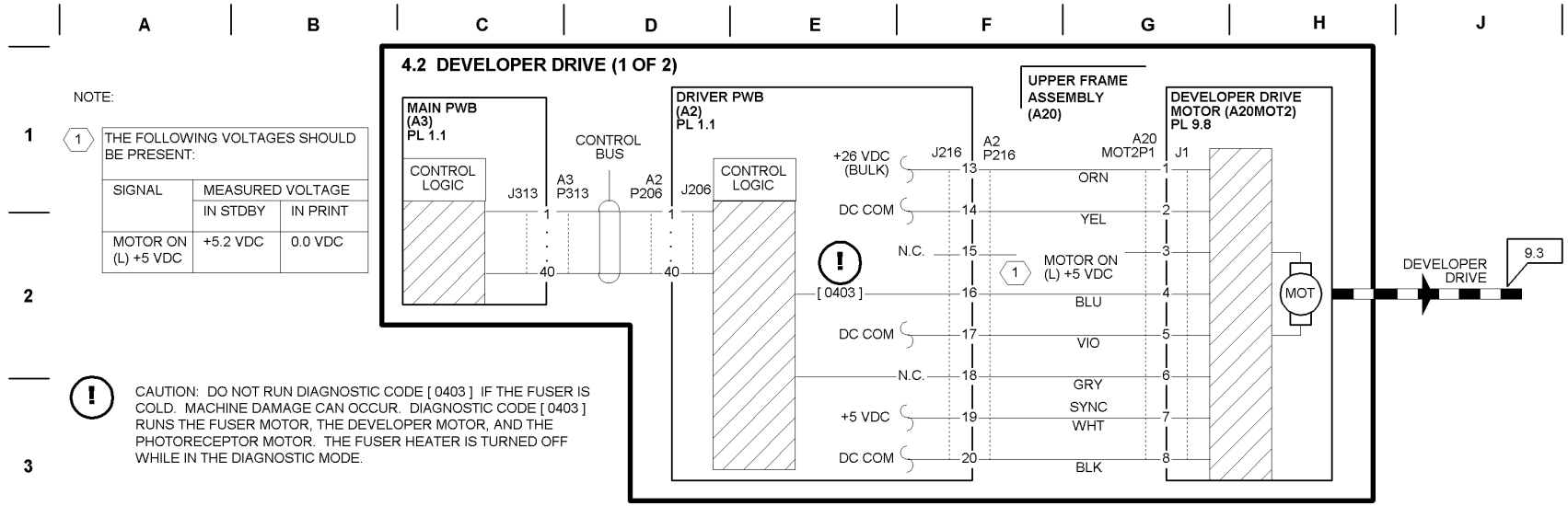


NOTE:

(1) THE FOLLOWING VOLTAGES SHOULD BE PRESENT:

| SIGNAL | MEASURED VOLTAGE | |
|---|---|---|
| | IN STDBY | IN PRINT |
| MOTOR ON (L) +5 VDC | +5.2 VDC | 0.0 VDC |

CAUTION: DO NOT RUN DIAGNOSTIC CODE [ 0403 ] IF THE FUSER IS COLD. MACHINE DAMAGE CAN OCCUR. DIAGNOSTIC CODE [ 0403 ] RUNS THE FUSER MOTOR, THE DEVELOPER MOTOR, AND THE PHOTORECEPTOR MOTOR. THE FUSER HEATER IS TURNED OFF WHILE IN THE DIAGNOSTIC MODE.

W/ TAG 25

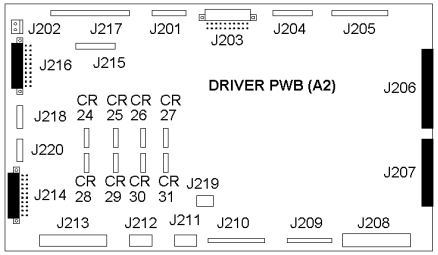


W/ TAG 27

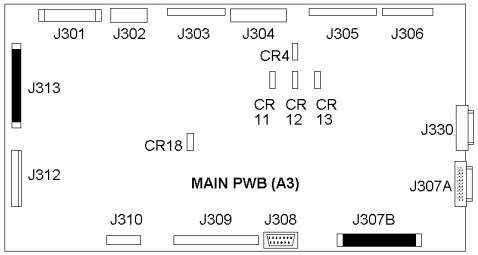


W/O TAG 25

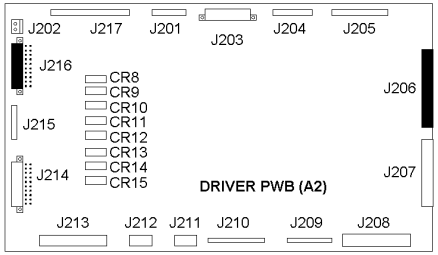


W/O TAG 27

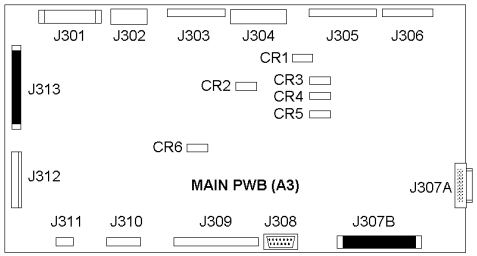


| INPUT POWER BLOCK | | |
|---|---|---|
| VOLTAGE | TEST POINT | G F |
| +26 VDC (BULK) (W/O TAG 25) | LVPS (A5) J3-18 | 1.2 |
| +26 VDC (BULK) (W/ TAG 25) | Driver (A2) A2P207-5 | 1.2 |
| DC COM (W/O TAG 25) | LVPS (A5) J3-17 | 1.2 |
| DC COM (W/ TAG 25) | Driver (A2) A2P207-7 | 1.2 |
| +5 VDC (W/O TAG 25) | LVPS (A5) J3-14 | 1.2 |
| +5 VDC (W/ TAG 25) | Driver (A2) A2P214-4 | 1.2 |
| DC COM (W/O TAG 25) | LVPS (A5) J3-11 | 1.2 |
| DC COM (W/ TAG 25) | Driver (A2) A2P214-3 | 1.2 |

## 4.2 DEVELOPER DRIVE (2 OF 2)

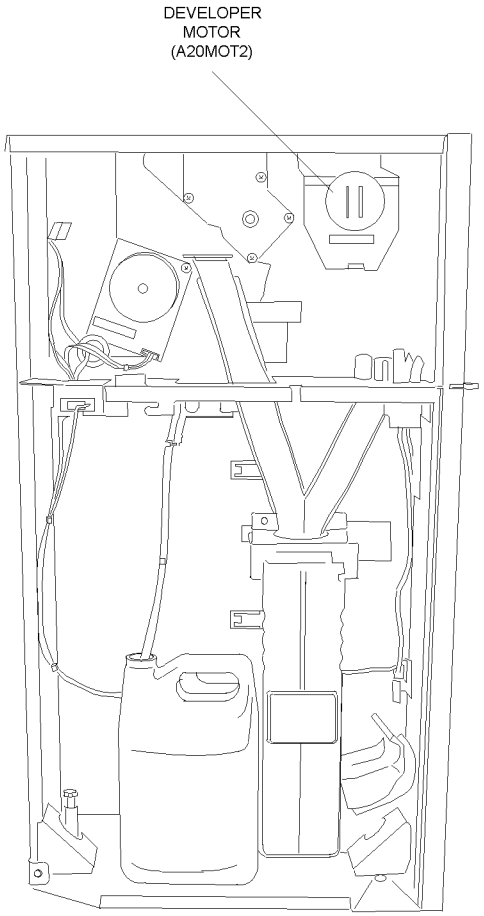

# BSD 4.3 Drum Drive

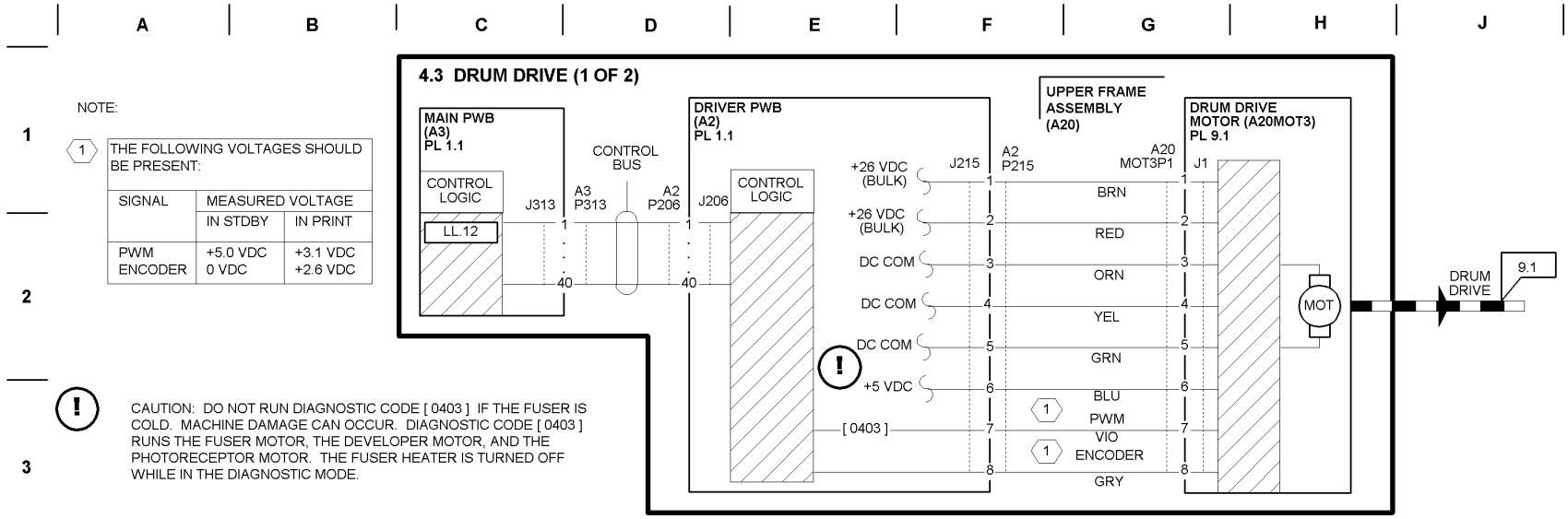


NOTE:

1 THE FOLLOWING VOLTAGES SHOULD BE PRESENT:

| SIGNAL | MEASURED VOLTAGE | |
|---|---|---|
| | IN STDBY | IN PRINT |
| PWM ENCODER | +5.0 VDC 0 VDC | +3.1 VDC +2.6 VDC |

CAUTION: DO NOT RUN DIAGNOSTIC CODE [ 0403 ] IF THE FUSER IS COLD. MACHINE DAMAGE CAN OCCUR. DIAGNOSTIC CODE [ 0403 ] RUNS THE FUSER MOTOR, THE DEVELOPER MOTOR, AND THE PHOTORECEPTOR MOTOR. THE FUSER HEATER IS TURNED OFF WHILE IN THE DIAGNOSTIC MODE.

W/ TAG 25

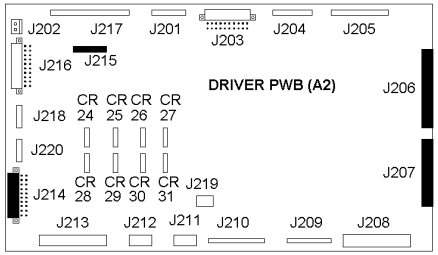


W/ TAG 27

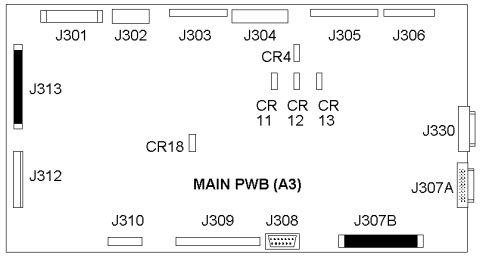


W/O TAG 25

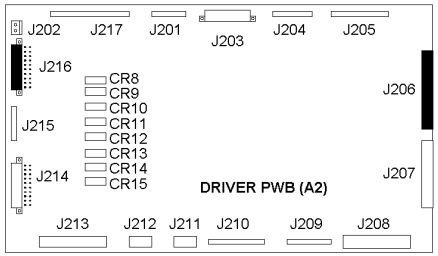


W/O TAG 27

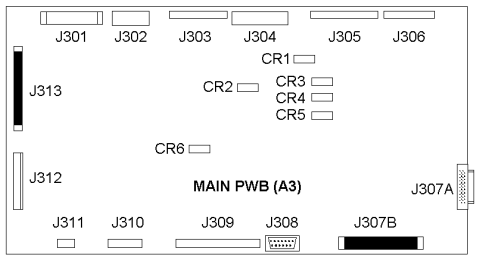


| INPUT POWER BLOCK | | |
|---|---|---|
| VOLTAGE | TEST POINT | G F |
| +26 VDC (BULK) (W/O TAG 25) | LVPS (A5) J3-18 | 1.2 |
| +26 VDC (BULK) (W/ TAG 25) | Driver (A2) A2P207-5 | 1.2 |
| DC COM (W/O TAG 25) | LVPS (A5) J3-17 | 1.2 |
| DC COM (W/ TAG 25) | Driver (A2) A2P207-7 | 1.2 |
| +5 VDC (W/O TAG 25) | LVPS (A5) J3-14 | 1.2 |
| +5 VDC (W/ TAG 25) | Driver (A2) A2P214-4 | 1.2 |
| DC COM (W/O TAG 25) | LVPS (A5) J3-11 | 1.2 |
| DC COM (W/ TAG 25) | Driver (A2) A2P214-3 | 1.2 |

## 4.3 DRUM DRIVE (2 OF 2)

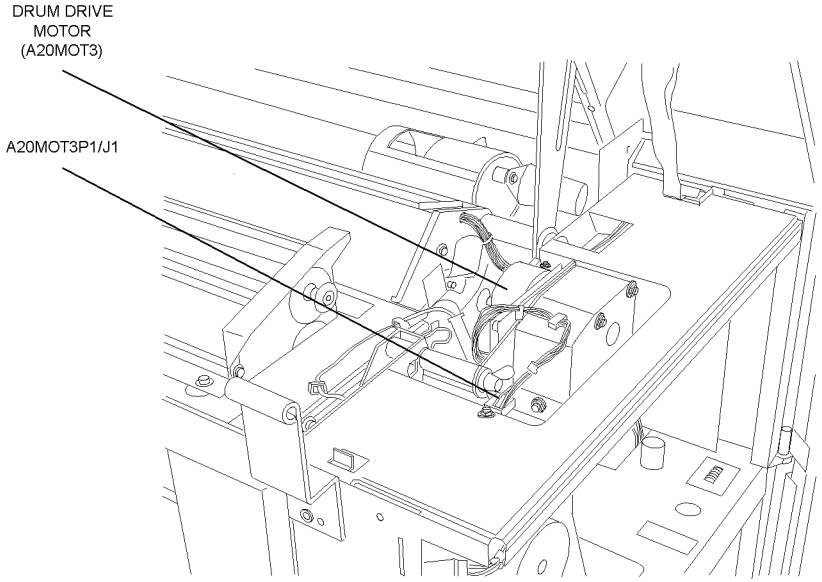

# BSD 6.1 Imaging Right Side (W/ O TAGS 27 and 28) (Differential)

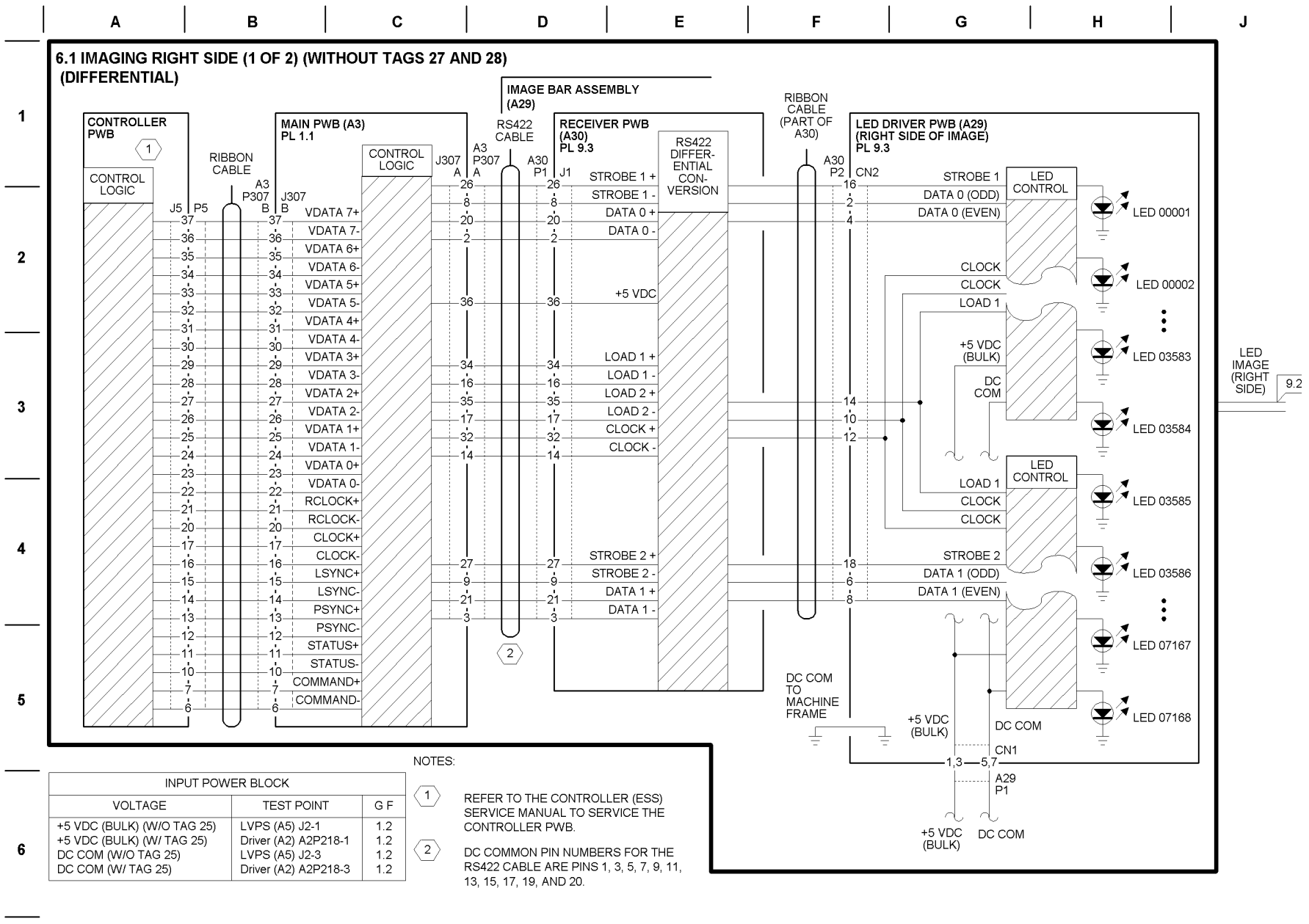


| INPUT POWER BLOCK | | |
|---|---|---|
| VOLTAGE | TEST POINT | G F |
| +5 VDC (BULK) (W/O TAG 25) | LVPS (A5) J2-1 | 1.2 |
| +5 VDC (BULK) (W/ TAG 25) | Driver (A2) A2P218-1 | 1.2 |
| DC COM (W/O TAG 25) | LVPS (A5) J2-3 | 1.2 |
| DC COM (W/ TAG 25) | Driver (A2) A2P218-3 | 1.2 |

NOTES:

1. REFER TO THE CONTROLLER (ESS) SERVICE MANUAL TO SERVICE THE CONTROLLER PWB.
2. DC COMMON PIN NUMBERS FOR THE RS422 CABLE ARE PINS 1, 3, 5, 7, 9, 11, 13, 15, 17, 19, AND 20.

## 6.1 IMAGING RIGHT SIDE (2 OF 2) (WITHOUT TAGS 27 AND 28) (DIFFERENTIAL)

**IMAGING (RIGHT SIDE) DIAGNOSTIC CODES**

[ 0921 ] ESV MANUAL SETUP:

[ 5 ]. RUNS THE LED BAR DUTY CYCLE SETUP. THIS ESTABLISHES THE PRINT DENSITY BASELINE. THIS TEST **IS NOT** DISABLED WHEN THE INTERLOCKS ARE BROKEN.

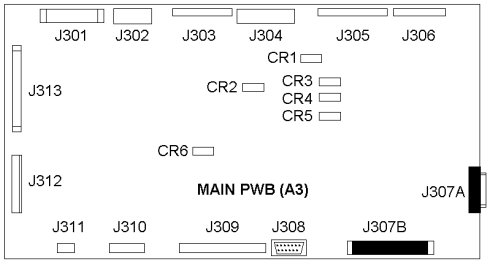


W/ TAG 25

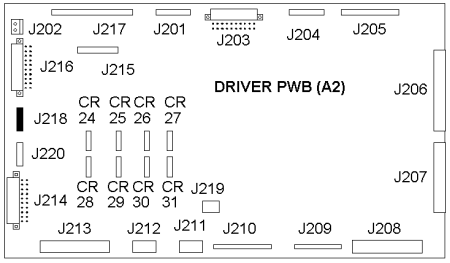


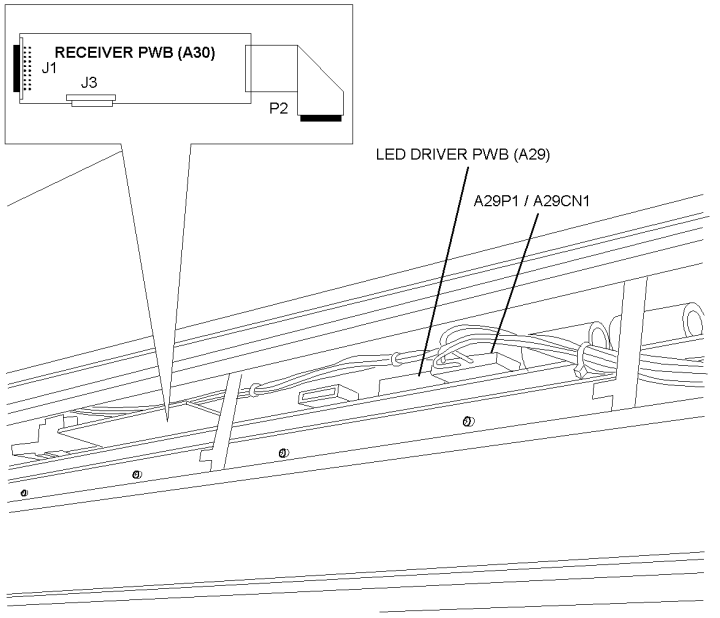


VIEW: TOP COVER OPEN
(LOOKING DOWN AT PRINT HEAD)

07013

# BSD 6.1 Imaging Right Side (1 of 2) (With TAGS 27 and 28) (Single Ended)

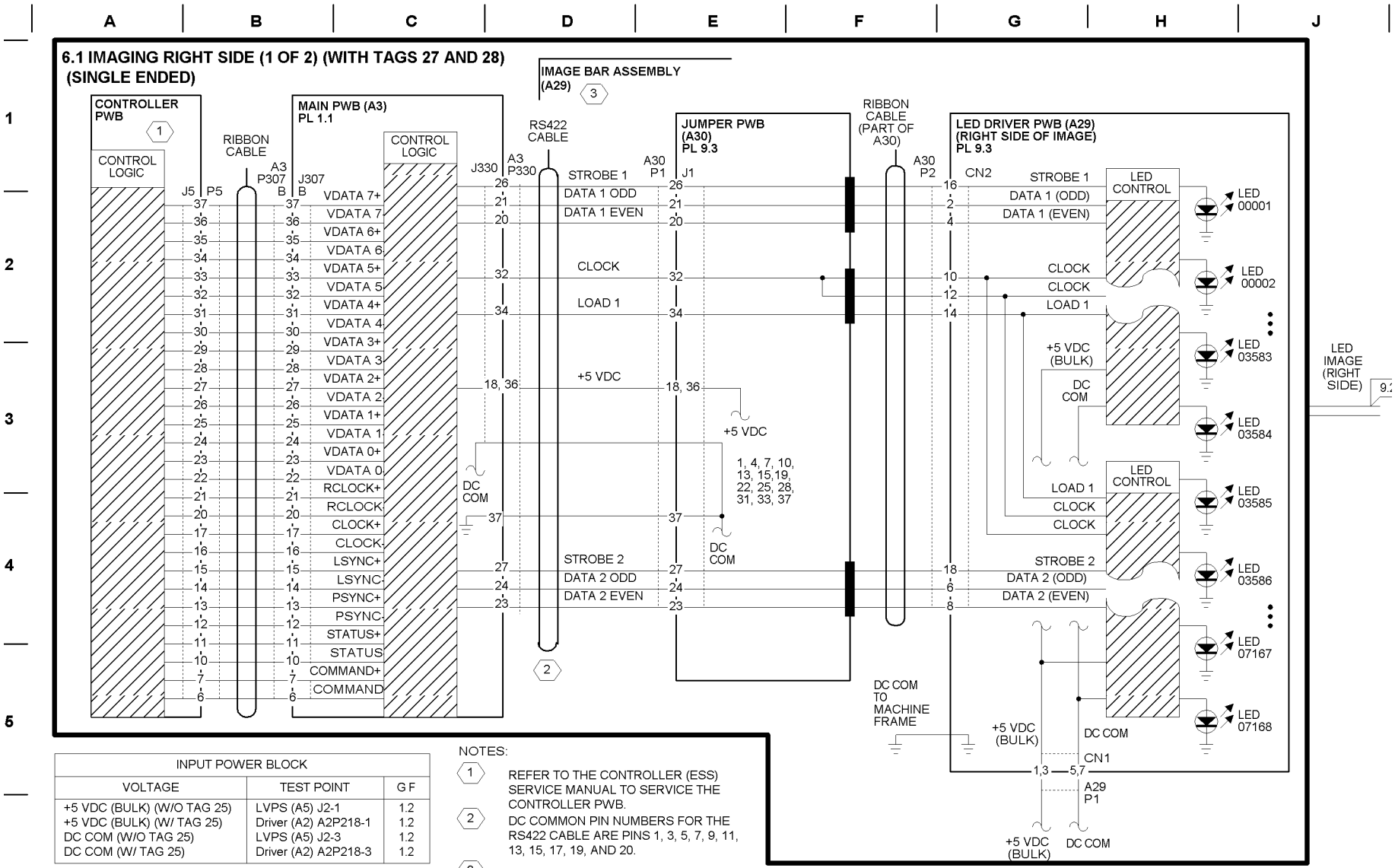


| INPUT POWER BLOCK | | |
|---|---|---|
| VOLTAGE | TEST POINT | G F |
| +5 VDC (BULK) (W/O TAG 25) | LVPS (A5) J2-1 | 1.2 |
| +5 VDC (BULK) (W/ TAG 25) | Driver (A2) A2P218-1 | 1.2 |
| DC COM (W/O TAG 25) | LVPS (A5) J2-3 | 1.2 |
| DC COM (W/ TAG 25) | Driver (A2) A2P218-3 | 1.2 |

NOTES:

1. REFER TO THE CONTROLLER (ESS) SERVICE MANUAL TO SERVICE THE CONTROLLER PWB.
2. DC COMMON PIN NUMBERS FOR THE RS422 CABLE ARE PINS 1, 3, 5, 7, 9, 11, 13, 15, 17, 19, AND 20.
3. THE NEW IMAGE BAR (W/ TAG 28) CAN BE USED WITH THE MAIN PWB (A3) (W/O TAG 27). REPLACE THE JUMPER PWB WITH THE RS-422 PWB FROM THE OLD IMAGE BAR.

## 6.1 IMAGING RIGHT SIDE (2 OF 2) (WITH TAGS 27 AND 28) (SINGLE ENDED)

**IMAGING (RIGHT SIDE) DIAGNOSTIC CODES**

[ 0921 ] ESV MANUAL SETUP:

[ 5 ]. RUNS THE LED BAR DUTY CYCLE SETUP. THIS ESTABLISHES THE PRINT DENSITY BASELINE. THIS TEST IS **NOT** DISABLED WHEN THE INTERLOCKS ARE BROKEN.

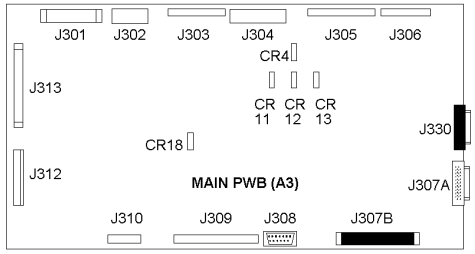


W/ TAG 25

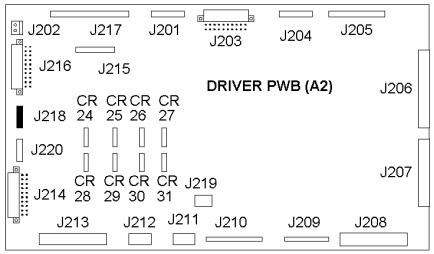


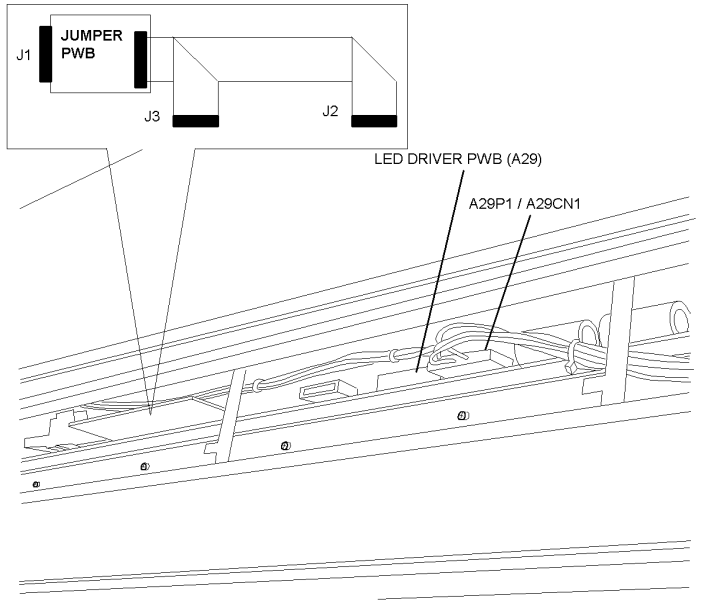


VIEW: TOP COVER OPEN
(LOOKING DOWN AT PRINT HEAD)

07013

# BSD 6.2 Imaging Left Side (1 of 2) (Without TAGS 27 and 28) (Differential)

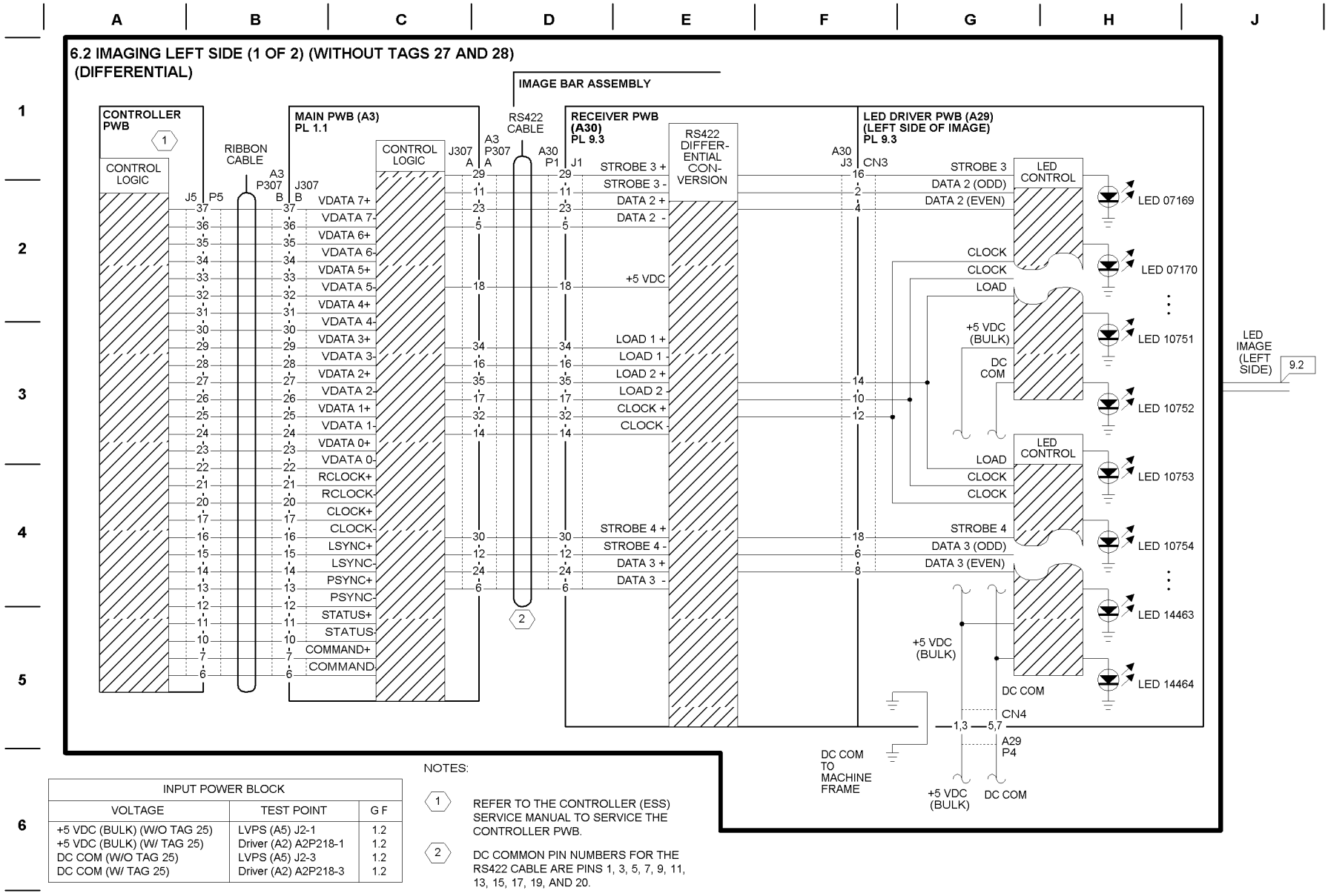


| INPUT POWER BLOCK | | |
|---|---|---|
| VOLTAGE | TEST POINT | G F |
| +5 VDC (BULK) (W/O TAG 25) | LVPS (A5) J2-1 | 1.2 |
| +5 VDC (BULK) (W/ TAG 25) | Driver (A2) A2P218-1 | 1.2 |
| DC COM (W/O TAG 25) | LVPS (A5) J2-3 | 1.2 |
| DC COM (W/ TAG 25) | Driver (A2) A2P218-3 | 1.2 |

NOTES:

1. REFER TO THE CONTROLLER (ESS) SERVICE MANUAL TO SERVICE THE CONTROLLER PWB.
2. DC COMMON PIN NUMBERS FOR THE RS422 CABLE ARE PINS 1, 3, 5, 7, 9, 11, 13, 15, 17, 19, AND 20.

## 6.2 IMAGING LEFT SIDE (2 OF 2) (WITHOUT TAGS 27 AND 28) (DIFFERENTIAL)

IMAGING (RIGHT SIDE) DIAGNOSTIC CODES

[ 0921 ] ESV MANUAL SETUP:

[ 5 ]. RUNS THE LED BAR DUTY CYCLE SETUP. THIS ESTABLISHES THE PRINT DENSITY BASELINE. THIS TEST **IS NOT** DISABLED WHEN THE INTERLOCKS ARE BROKEN.

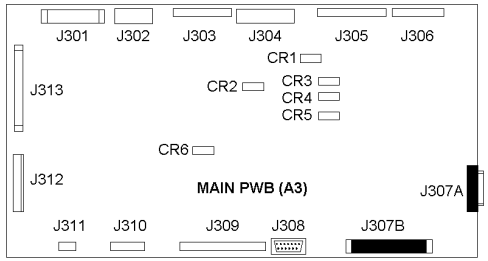


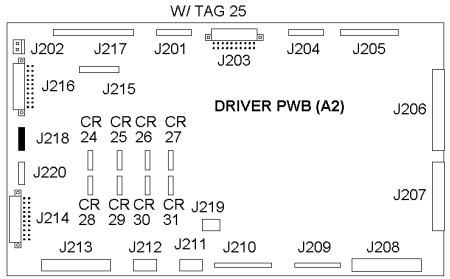


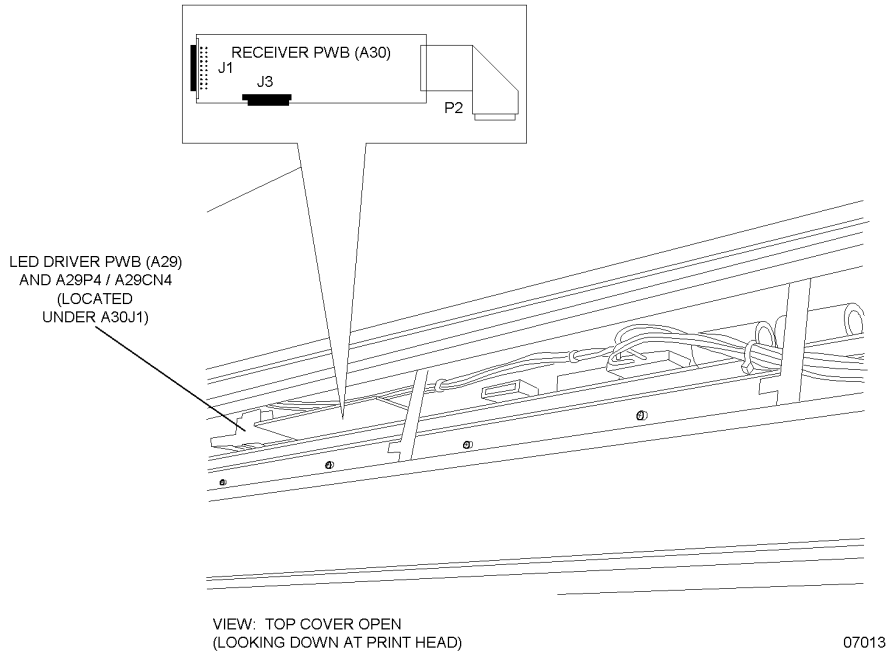

# BSD 6.2 Imaging Left Side (1 of 2) (With TAGS 27 and 28) (Single Ended)

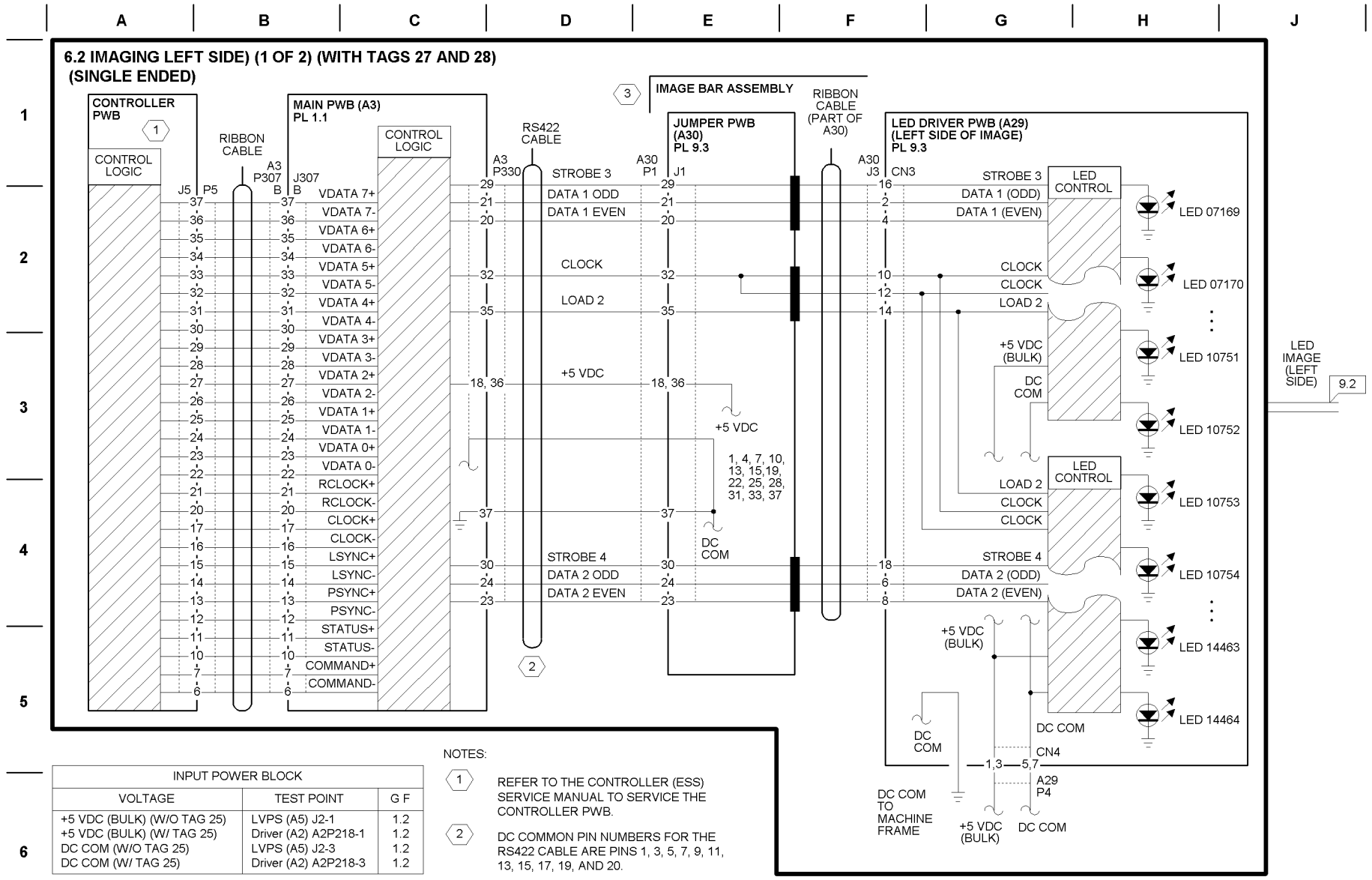


| INPUT POWER BLOCK | | |
|---|---|---|
| VOLTAGE | TEST POINT | G F |
| +5 VDC (BULK) (W/O TAG 25) | LVPS (A5) J2-1 | 1.2 |
| +5 VDC (BULK) (W/ TAG 25) | Driver (A2) A2P218-1 | 1.2 |
| DC COM (W/O TAG 25) | LVPS (A5) J2-3 | 1.2 |
| DC COM (W/ TAG 25) | Driver (A2) A2P218-3 | 1.2 |

NOTES:

1. REFER TO THE CONTROLLER (ESS) SERVICE MANUAL TO SERVICE THE CONTROLLER PWB.
2. DC COMMON PIN NUMBERS FOR THE RS422 CABLE ARE PINS 1, 3, 5, 7, 9, 11, 13, 15, 17, 19, AND 20.
3. THE NEW IMAGE BAR (W/ TAG 28) CAN BE USED WITH THE MAIN PWB (A3) (W/O TAG 27). REPLACE THE JUMPER PWB WITH THE RS-422 PWB FROM THE OLD IMAGE BAR.

## 6.2 IMAGING LEFT SIDE (2 OF 2) (WITH TAGS 27 AND 28) (SINGLE ENDED)

IMAGING (RIGHT SIDE) DIAGNOSTIC CODES

[ 0921 ] ESV MANUAL SETUP:

[ 5 ]. RUNS THE LED BAR DUTY CYCLE SETUP. THIS ESTABLISHES THE PRINT DENSITY BASELINE. THIS TEST IS **NOT** DISABLED WHEN THE INTERLOCKS ARE BROKEN.

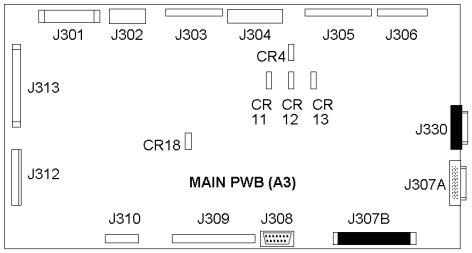


W/ TAG 25

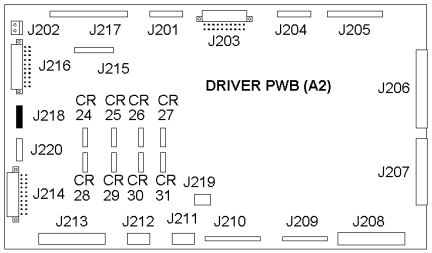


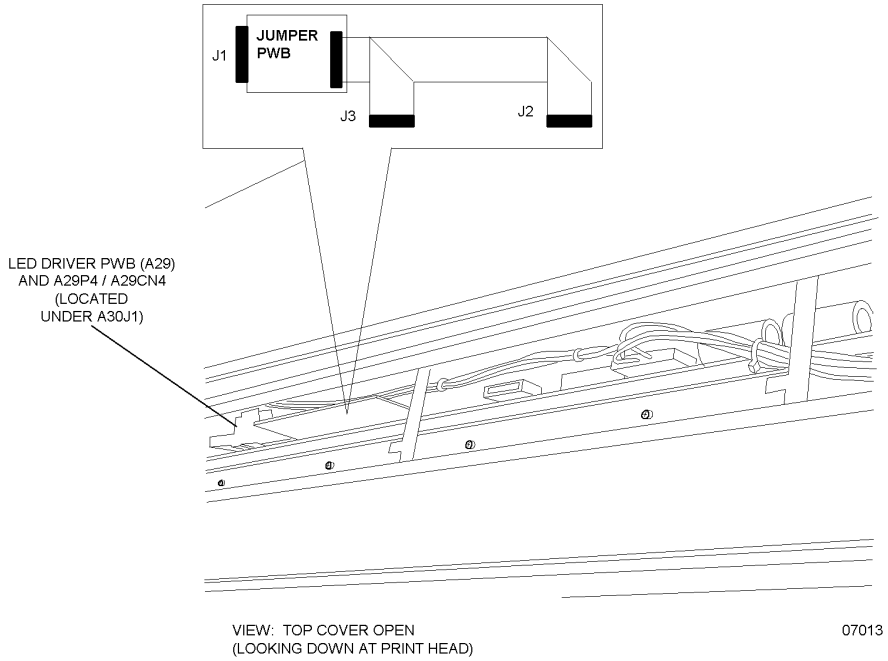


VIEW: TOP COVER OPEN
(LOOKING DOWN AT PRINT HEAD)

07013

# BSD 7.1 Media Drive

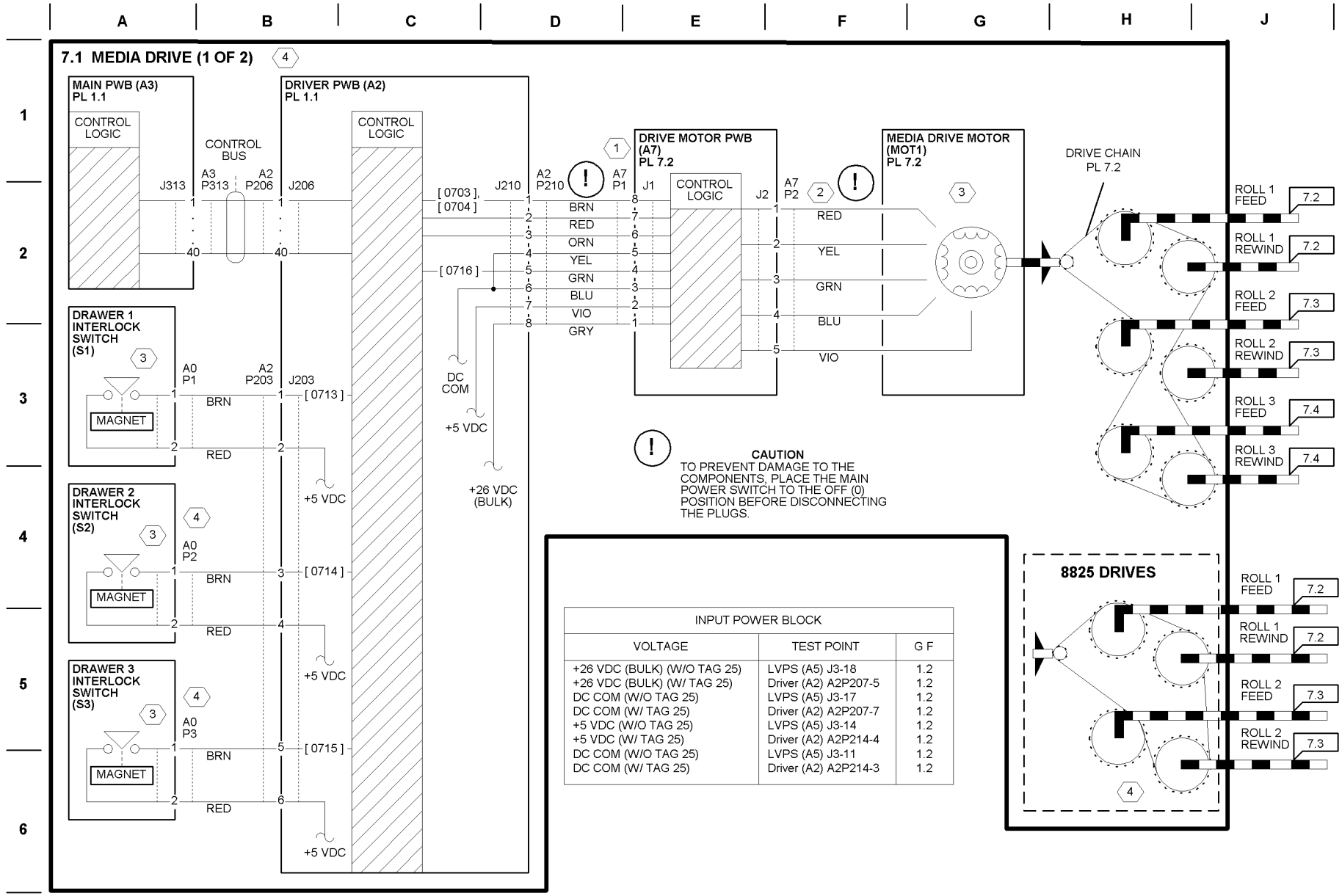


| INPUT POWER BLOCK | | |
|---|---|---|
| VOLTAGE | TEST POINT | G F |
| +26 VDC (BULK) (W/O TAG 25) | LVPS (A5) J3-18 | 1.2 |
| +26 VDC (BULK) (W/ TAG 25) | Driver (A2) A2P207-5 | 1.2 |
| DC COM (W/O TAG 25) | LVPS (A5) J3-17 | 1.2 |
| DC COM (W/ TAG 25) | Driver (A2) A2P207-7 | 1.2 |
| +5 VDC (W/O TAG 25) | LVPS (A5) J3-14 | 1.2 |
| +5 VDC (W/ TAG 25) | Driver (A2) A2P214-4 | 1.2 |
| DC COM (W/O TAG 25) | LVPS (A5) J3-11 | 1.2 |
| DC COM (W/ TAG 25) | Driver (A2) A2P214-3 | 1.2 |

## 7.1 MEDIA DRIVE (2 OF 2)

1. A7P1 APPROXIMATE VOLTAGES: A7P1 DISCONNECTED FROM DRIVE MOTOR PWB (A7)

**CAUTION**: TO PREVENT DAMAGE TO THE MOTOR COMPONENTS, TURN OFF THE POWER SWITCH (0) BEFORE DISCONNECTING ANY PLUGS.

| PIN | STANDBY VOLTAGE | [ 0703 ] VOLTAGE | [ 0704 ] VOLTAGE |
|---|---|---|---|
| A7P1-8 | +3.8 VDC | +0.1 VDC | +3.8 VDC |
| A7P1-7 | +3.8 VDC | +3.8 VDC | +3.8 VDC |
| A7P1-6 | +0.1 VDC | +0.1 VDC | +0.1 VDC |
| A7P1-4 | +1.8 VDC | +1.8 VDC | +1.8 VDC |

2. WITH A7P2 DISCONNECTED FROM THE DRIVE MOTOR PWB (A7), THE APPROXIMATE RESISTANCES OF THE DRIVE MOTOR (MOT1) ARE AS FOLLOWS:
   A7P2-1 TO A7P2-2 = 3.5 OHMS.
   A7P2-3 TO A7P2-4 = 3.5 OHMS.

3. ALL THREE DRAWER INTERLOCK SWITCHES MUST BE ACTUATED (CLOSED) BEFORE THE MEDIA DRIVE MOTOR WILL OPERATE.

4. ROLL 2 IS OPTIONAL FOR THE 8825 AND IS IDENTIFIED AS TAG /MOD 90. ROLL 3 IS NOT AVAILABLE.

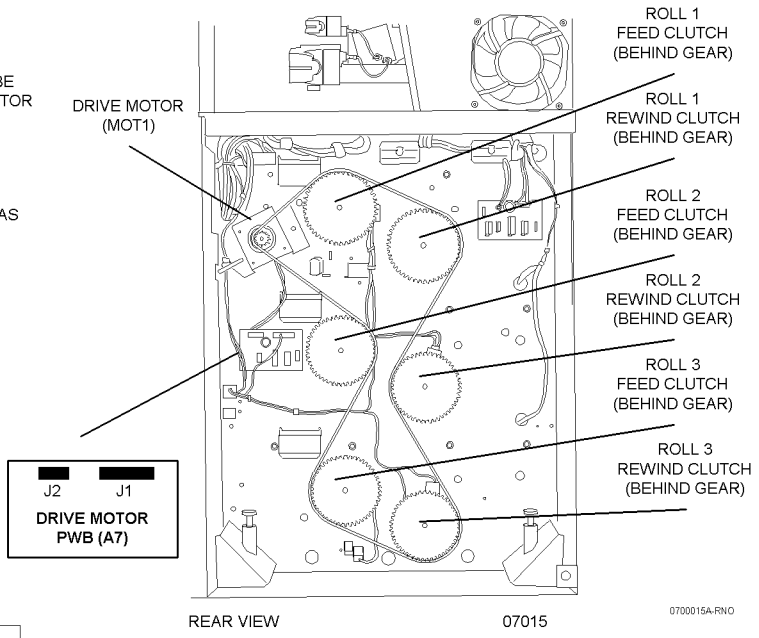


REAR VIEW 07015

W/ TAG 25

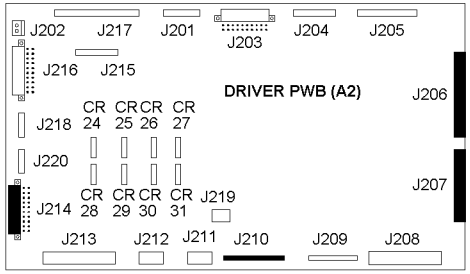


W/ TAG 27

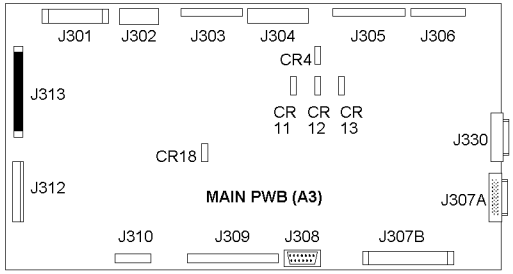


W/O TAG 25

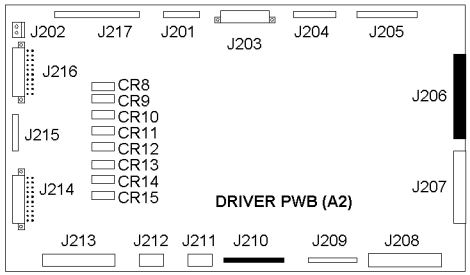


W/O TAG 27

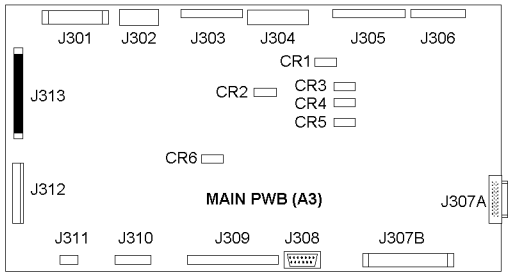


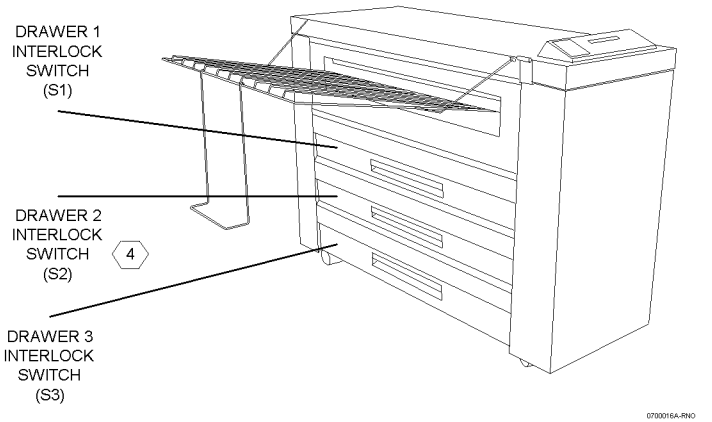


LEFT SIDE 07016

# BSD 7.2 Media Feed, Roll 1

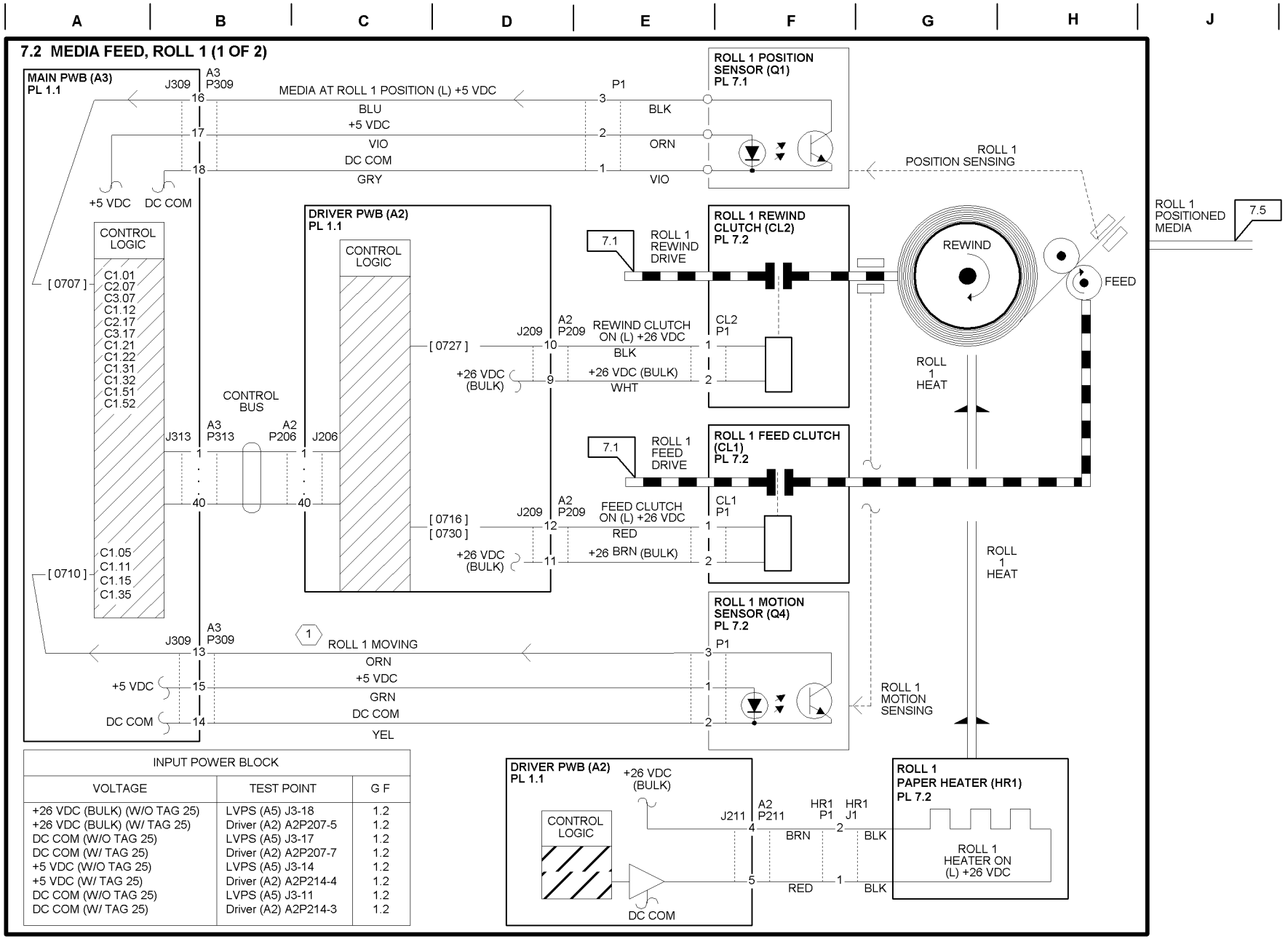

## 7.2 MEDIA FEED, ROLL 1 ( 2 OF 2 )

MACHINE RUN CONTROL DIAGNOSTIC CODES

[ 0707 ] ROLL 1 SENSOR (INPUT)

[ 0710 ] ROLL 1 MOTION SENSOR (INPUT)

[ 0716 ] ROLL 1 CONTROL (OUTPUT) : ENERGIZES THE MEDIA DRIVE MOTOR (MOT1) AND CONTROLS FEED AND REWIND CLUTCHES.

[ 0727 ] ROLL 1 REWIND CLUTCH (OUTPUT)

[ 0730 ] ROLL 1 FORWARD CLUTCH (OUTPUT)

1 MEASURE THE ROLL 1 MOVING SIGNAL AS FOLLOWS:
MOVING = +2.4 VDC.
STOPPED = 0 VDC OR +5 VDC

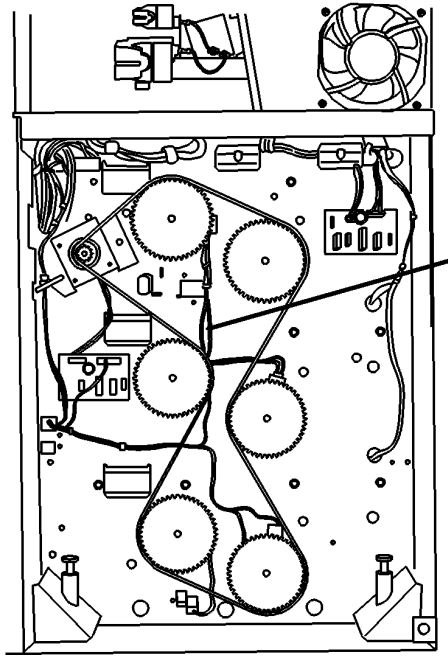

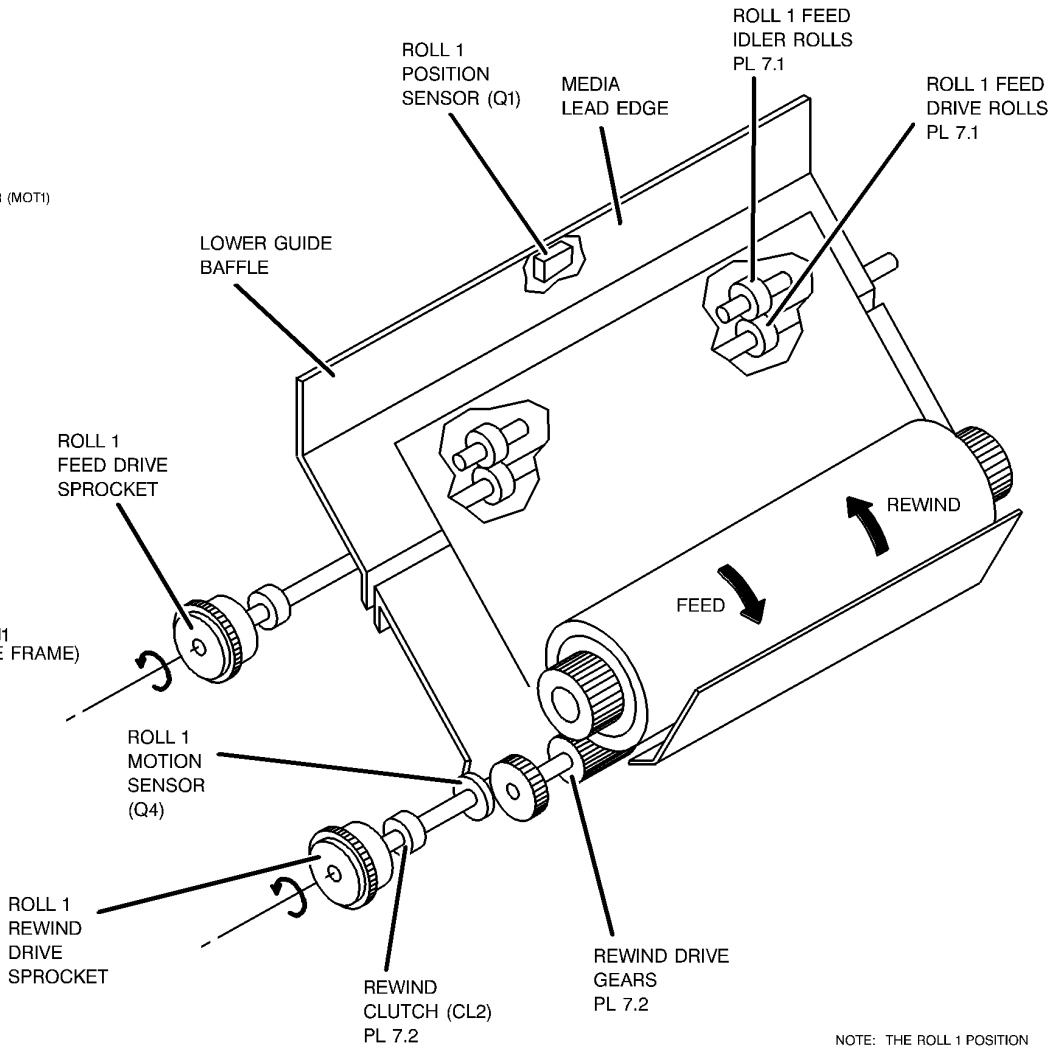


NOTE: THE ROLL 1 POSITION SENSOR (Q1) IS ACCESSIBLE FROM THE RIGHT SIDE OF THE MACHINE (BETWEEN THE DRIVER PWB AND THE MAIN PWB.

T707704A-RNO

# BSD 7.3 Media Feed, Roll 2

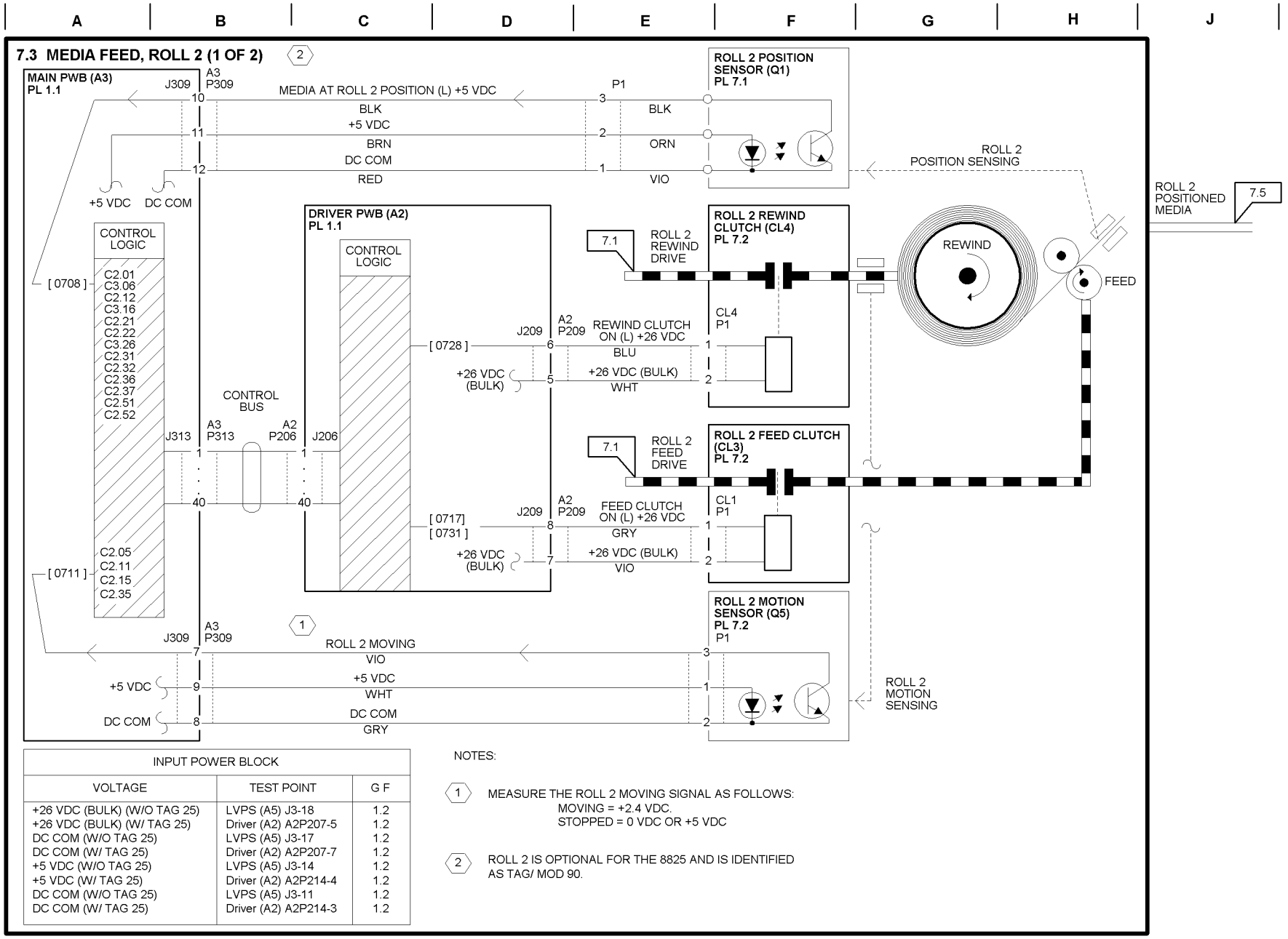


| INPUT POWER BLOCK | | |
|---|---|---|
| VOLTAGE | TEST POINT | G F |
| +26 VDC (BULK) (W/O TAG 25) | LVPS (A5) J3-18 | 1.2 |
| +26 VDC (BULK) (W/ TAG 25) | Driver (A2) A2P207-5 | 1.2 |
| DC COM (W/O TAG 25) | LVPS (A5) J3-17 | 1.2 |
| DC COM (W/ TAG 25) | Driver (A2) A2P207-7 | 1.2 |
| +5 VDC (W/O TAG 25) | LVPS (A5) J3-14 | 1.2 |
| +5 VDC (W/ TAG 25) | Driver (A2) A2P214-4 | 1.2 |
| DC COM (W/O TAG 25) | LVPS (A5) J3-11 | 1.2 |
| DC COM (W/ TAG 25) | Driver (A2) A2P214-3 | 1.2 |

NOTES:

1. MEASURE THE ROLL 2 MOVING SIGNAL AS FOLLOWS:
   MOVING = +2.4 VDC.
   STOPPED = 0 VDC OR +5 VDC

2. ROLL 2 IS OPTIONAL FOR THE 8825 AND IS IDENTIFIED AS TAG/ MOD 90.

## 7.3 MEDIA FEED, ROLL 2 (2 OF 2)

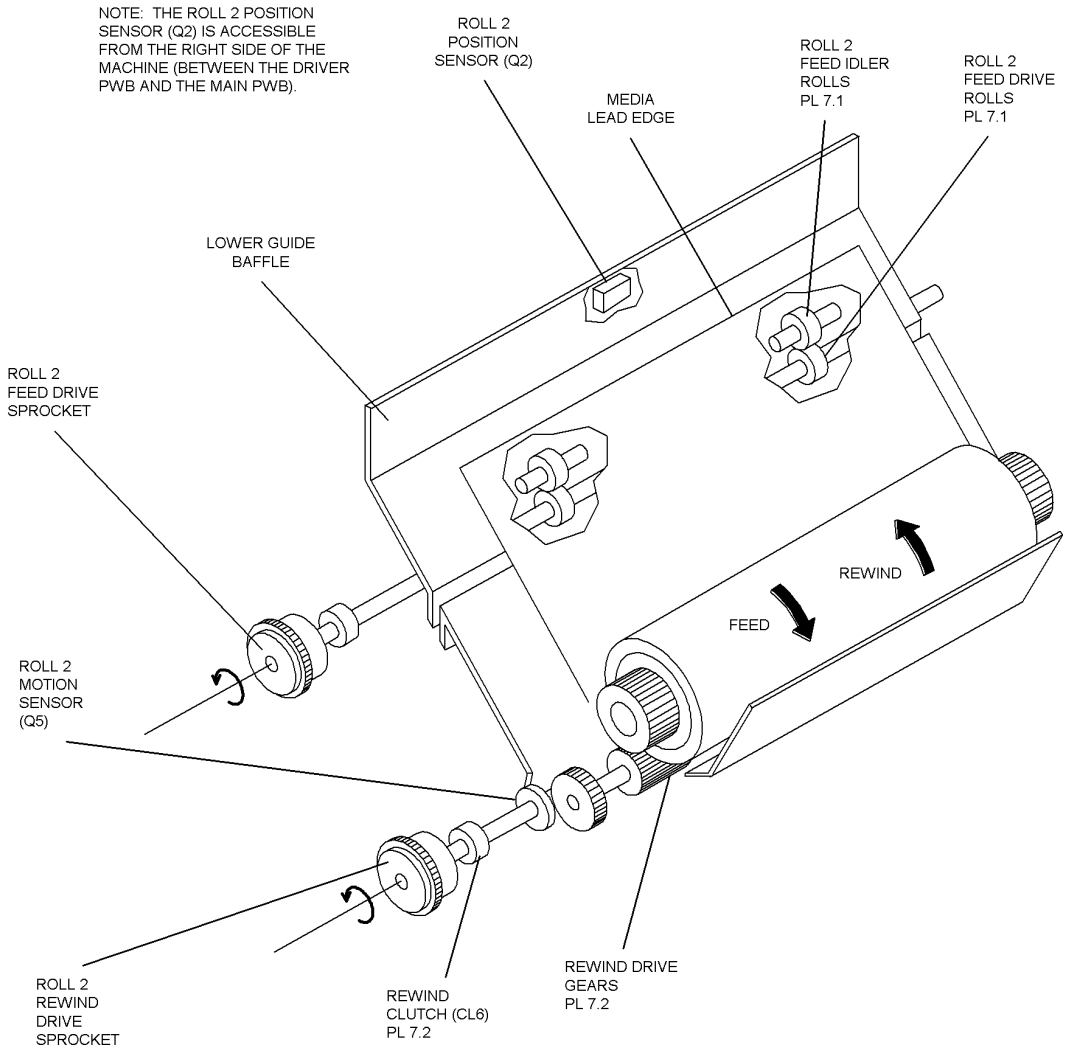

# BSD 7.4 Media Feed, Roll 3

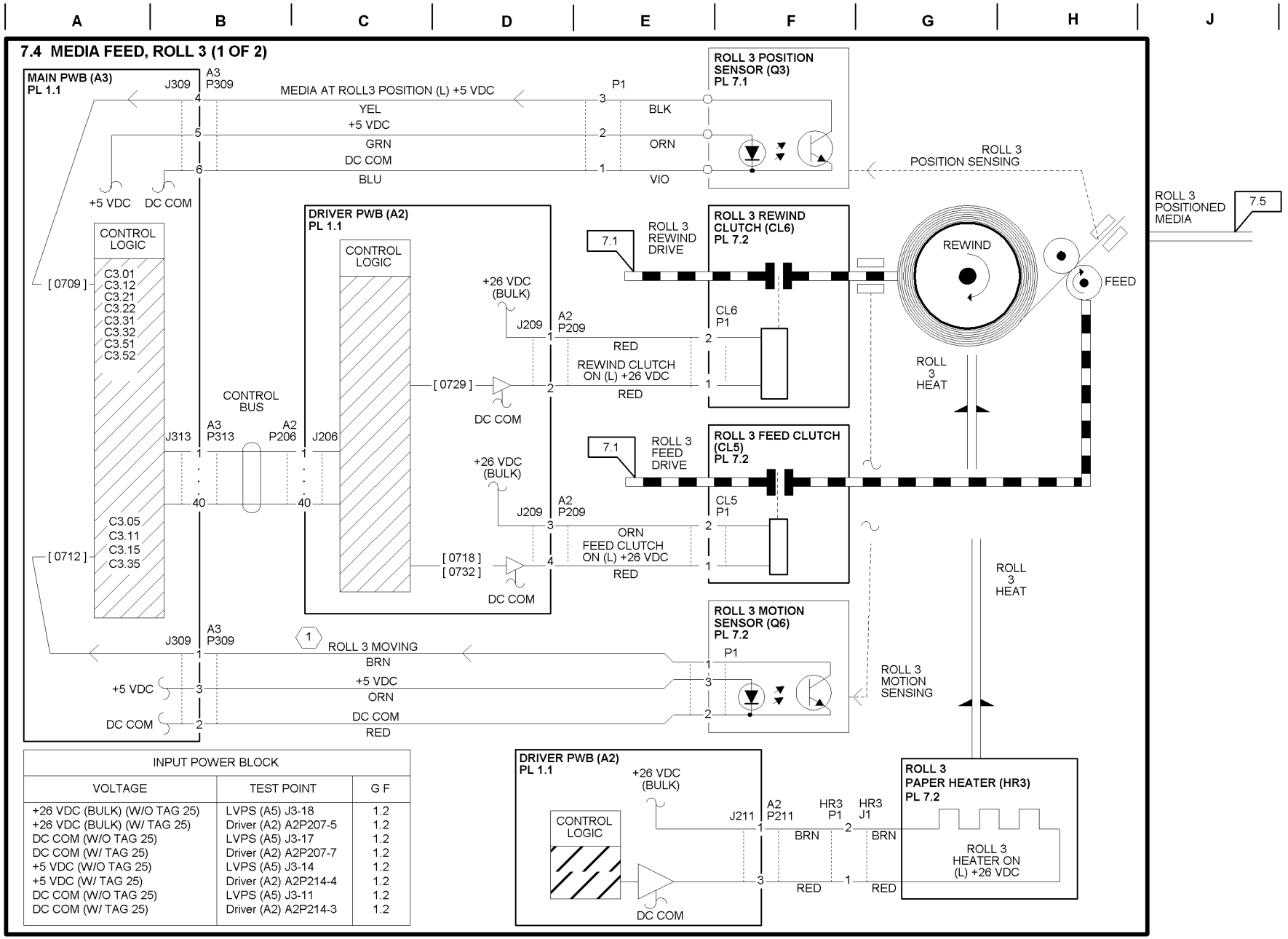

## 7.4 MEDIA FEED, ROLL 3 (2 OF 2)

MACHINE RUN CONTROL DIAGNOSTIC CODES

[ 0709 ] ROLL 3 SENSOR (INPUT)

[ 0712 ] ROLL 3 MOTION SENSOR (INPUT)

[ 0718 ] ENERGIZES THE MEDIA DRIVE MOTOR (MOT1) AND THE ROLL 3 CONTROL (OUTPUT) : CONTROLS FEED AND REWIND CLUTCHES.

[ 0729 ] ROLL 3 REWIND CLUTCH (OUTPUT)

[ 0732 ] ROLL 3 FORWARD CLUTCH (OUTPUT)

1 MEASURE THE ROLL 3 MOVING SIGNAL AS FOLLOWS:
MOVING = +2.4 VDC.
STOPPED = 0 VDC OR +5 VDC

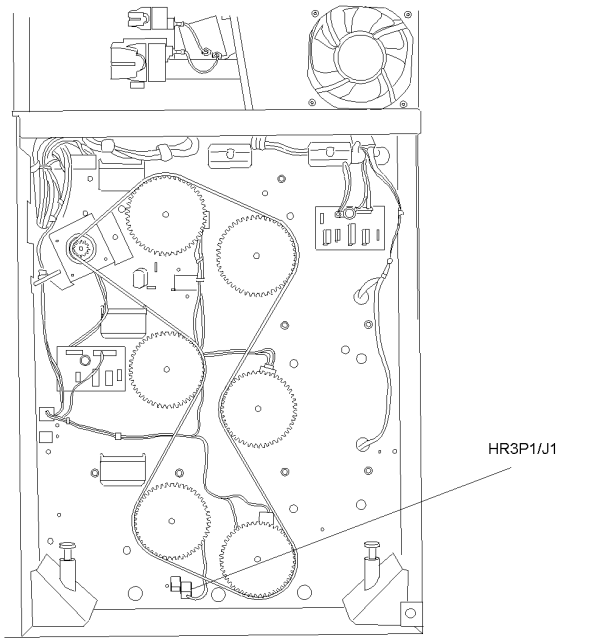


REAR VIEW

NOTE: THE ROLL 3 POSITION SENSOR (Q3) IS ACCESSIBLE FROM THE RIGHT SIDE OF THE MACHINE (BETWEEN THE DRIVER PWB AND THE MAIN PWB).

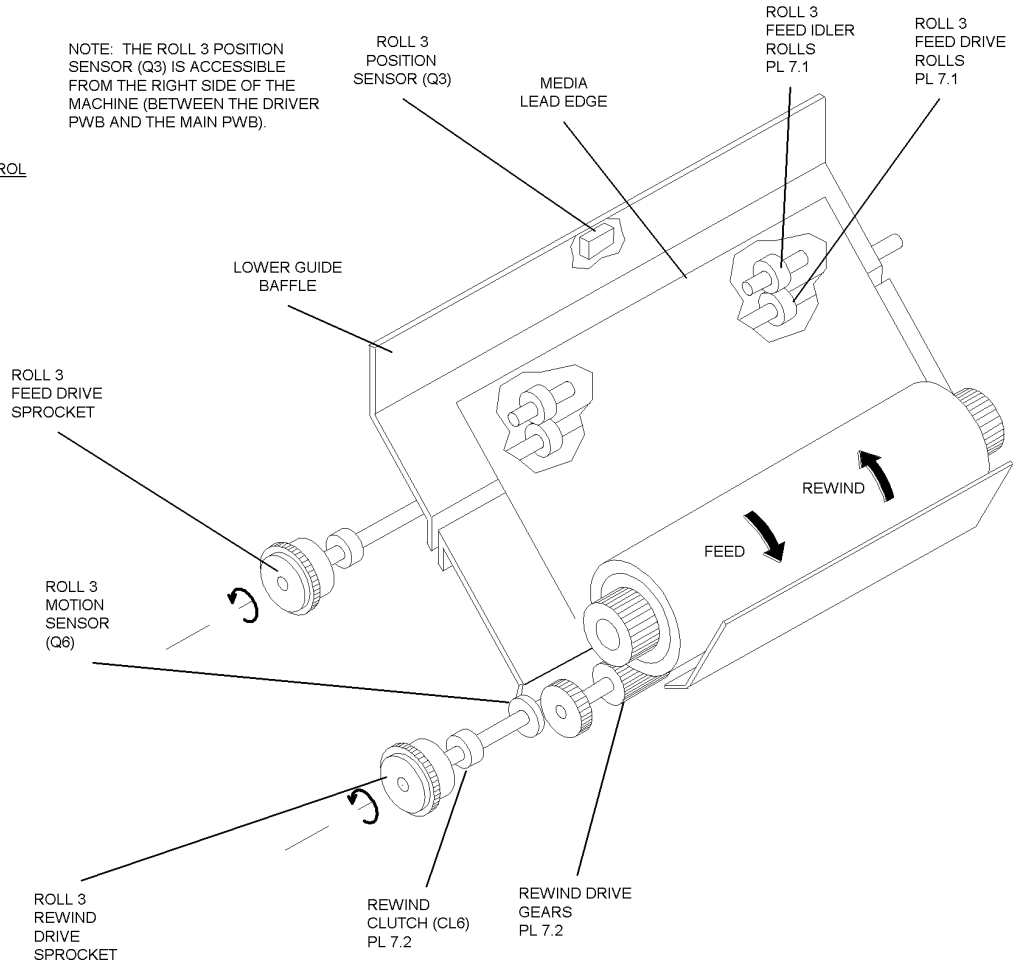

# BSD 7.5 Media Cutting

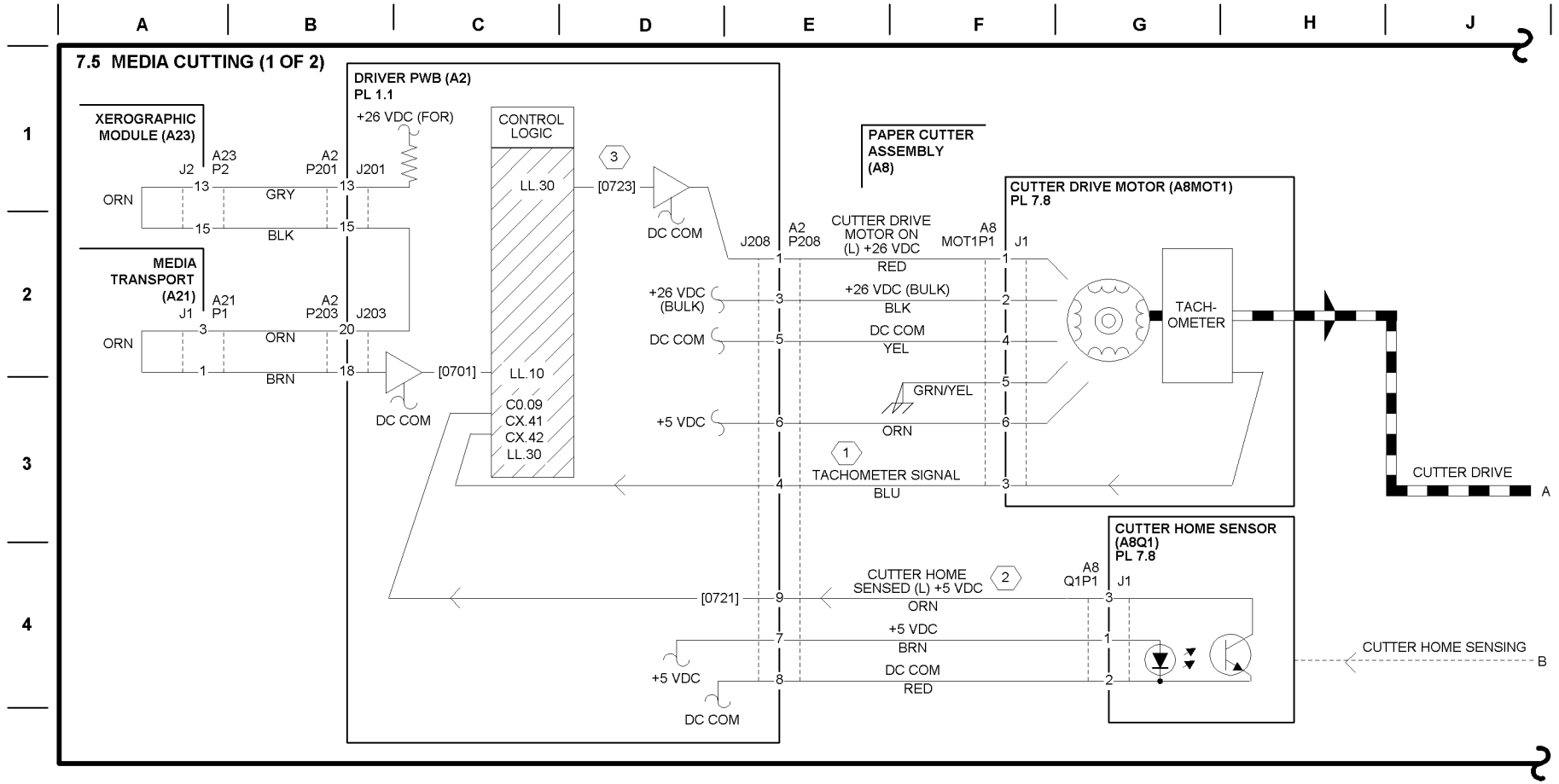


| INPUT POWER BLOCK | | |
|---|---|---|
| VOLTAGE | TEST POINT | G F |
| +26 VDC (FOR) (W/O TAG 25) | LVPS (A5) J3-3 | 1.2 |
| +26 VDC (FOR) (W/ TAG 25) | Driver (A2) A2P220-4 | 1.2 |
| DC COM (W/O TAG 25) | LVPS (A5) J3-6 | 1.2 |
| DC COM (W/ TAG 25) | Driver (A2) A2P220-6 | 1.2 |
| +26 VDC (BULK) (W/O TAG 25) | LVPS (A5) J3-18 | 1.2 |
| +26 VDC (BULK) (W/ TAG 25) | Driver (A2) A2P207-5 | 1.2 |
| DC COM (W/O TAG 25) | LVPS (A5) J3-17 | 1.2 |
| DC COM (W/ TAG 25) | Driver (A2) A2P207-7 | 1.2 |
| +5 VDC (W/O TAG 25) | LVPS (A5) J3-14 | 1.2 |
| +5 VDC (W/ TAG 25) | Driver (A2) A2P214-4 | 1.2 |
| DC COM (W/O TAG 25) | LVPS (A5) J3-11 | 1.2 |
| DC COM (W/ TAG 25) | Driver (A2) A2P214-3 | 1.2 |

W/ TAG 25

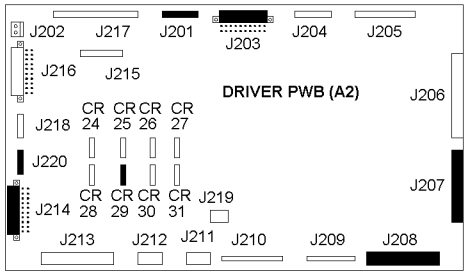


W/O TAG 25

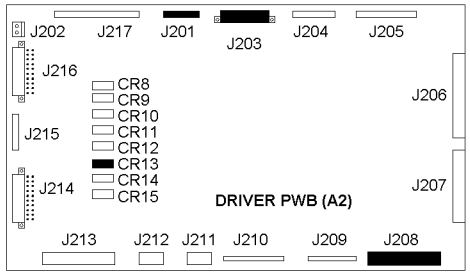

## 7.5 MEDIA CUTTING (2 OF 2)

**NOTES:**

1. THE TACHOMETER FEEDBACK SIGNAL IS AN ANALOG VOLTAGE SIGNAL AT APPROXIMATELY +0.6 VDC.
2. THE CUTTER HOME SENSED SIGNAL IS AS FOLLOWS:
   +5 VDC
   0 VDC
   HOME — ROTATING
   1 REVOLUTION
3. [ 0723 ] ENERGIZES THE CUTTER DRIVE MOTOR (MOT1). THE MOTOR DRIVES THE CUTTER BAR ONE COMPLETE REVOLUTION AND STOPS THE BAR AT HOME.
4. THE CONTROL CAMS ARE LUBRICATED WITH A SMALL AMOUNT OF MOLYKOTE 557, (USO, XCI, XLA 70H37); ( RX 70P61).

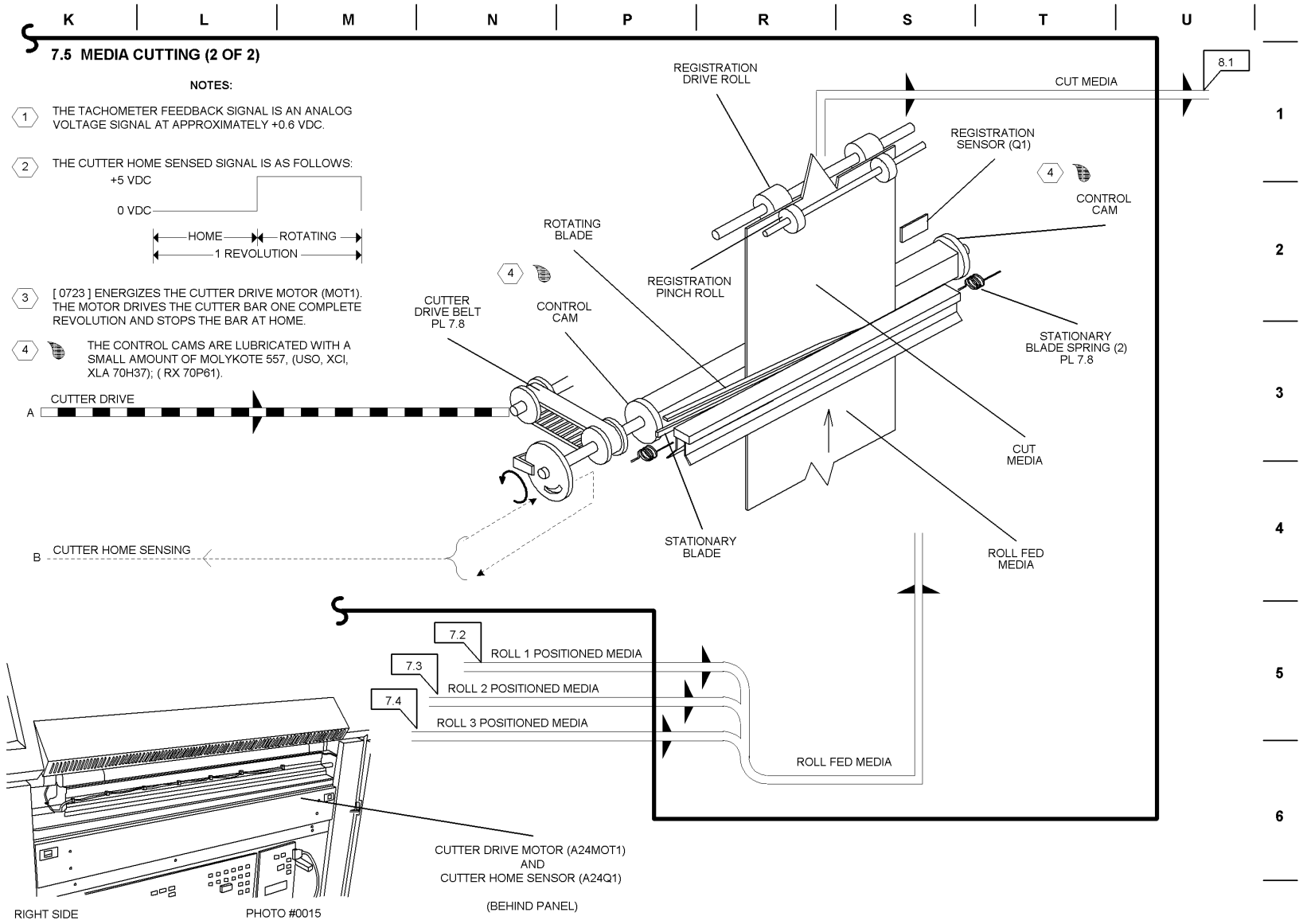

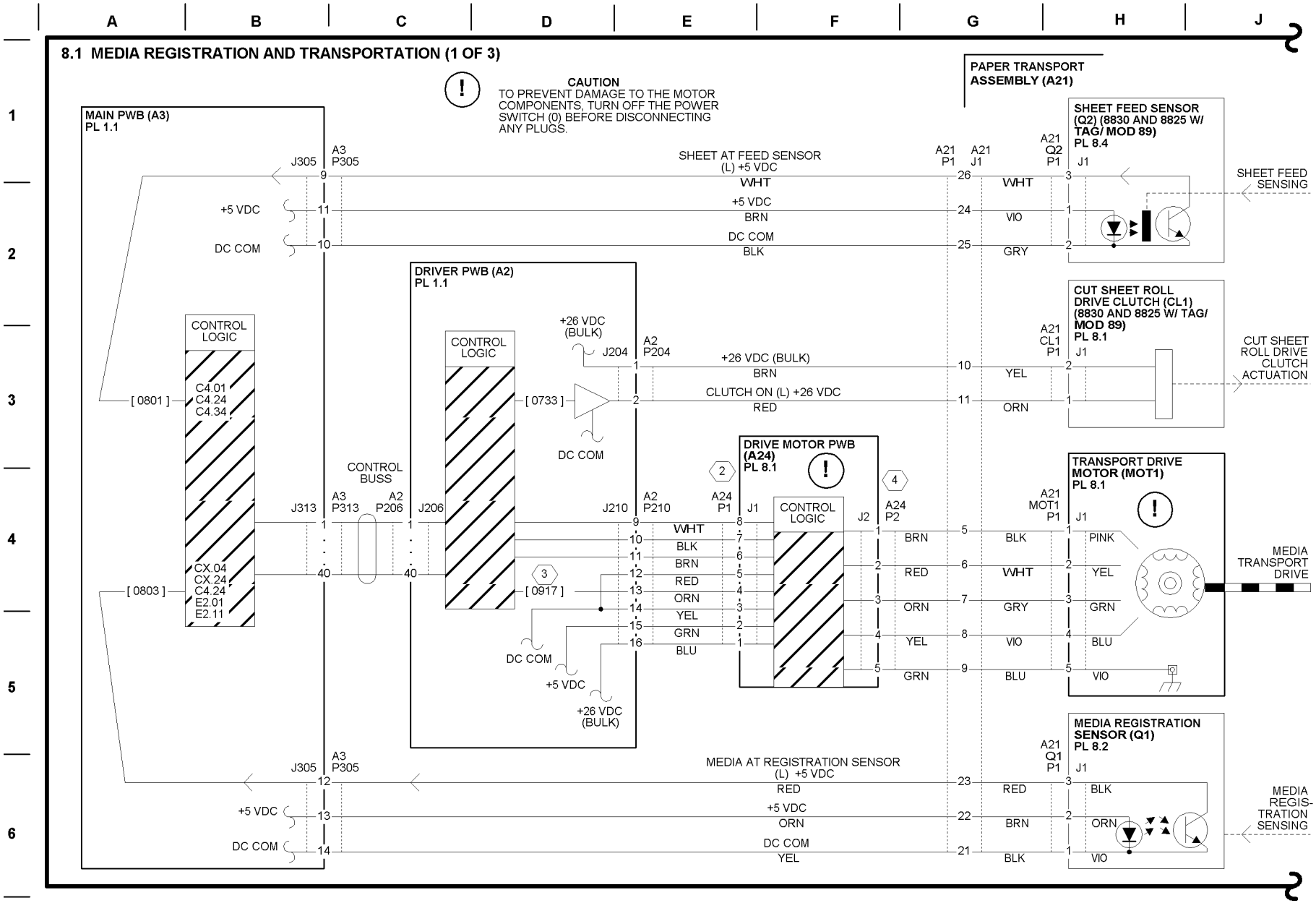
8.1 MEDIA REGISTRATION AND TRANSPORTATION (1 OF 3)
CAUTION
TO PREVENT DAMAGE TO THE MOTOR COMPONENTS, TURN OFF THE POWER SWITCH (0) BEFORE DISCONNECTING ANY PLUGS.
MAIN PWB (A3) PL 1.1
DRIVER PWB (A2) PL 1.1
DRIVE MOTOR PWB (A24) PL 8.1
PAPER TRANSPORT ASSEMBLY (A21)
SHEET FEED SENSOR (Q2) (8830 AND 8825 W/ TAG/ MOD 89) PL 8.4
CUT SHEET ROLL DRIVE CLUTCH (CL1) (8830 AND 8825 W/ TAG/ MOD 89) PL 8.1
TRANSPORT DRIVE MOTOR (MOT1) PL 8.1
MEDIA REGISTRATION SENSOR (Q1) PL 8.2
CONTROL LOGIC
CONTROL BUSS
SHEET AT FEED SENSOR (L) +5 VDC
MEDIA AT REGISTRATION SENSOR (L) +5 VDC
+5 VDC
DC COM
+26 VDC (BULK)
CLUTCH ON (L) +26 VDC
SHEET FEED SENSING
CUT SHEET ROLL DRIVE CLUTCH ACTUATION
MEDIA TRANSPORT DRIVE
MEDIA REGIS-TRATION SENSING

## 8.1 MEDIA REGISTRATION AND TRANSPORTATION (2 OF 3)

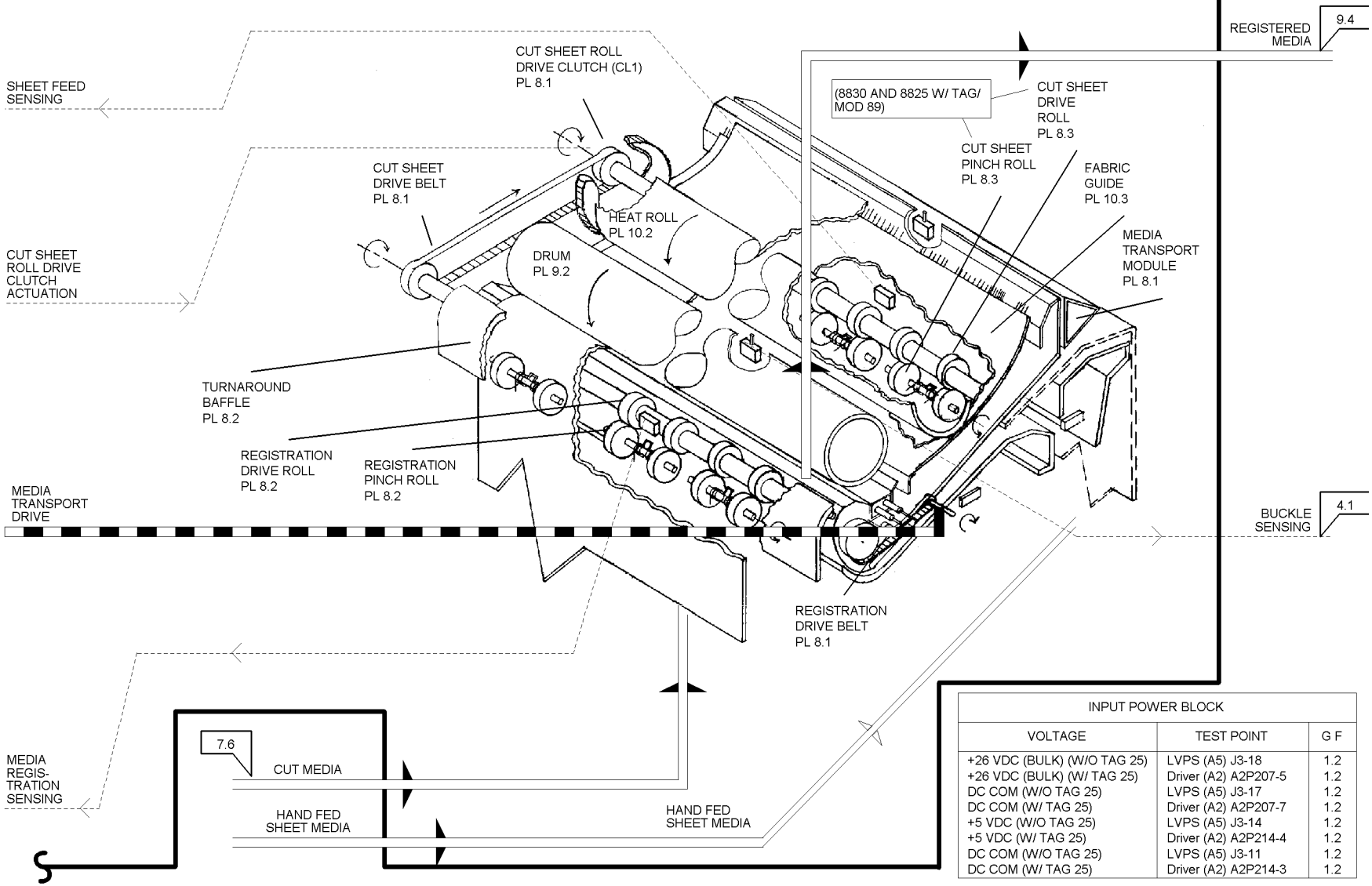


| INPUT POWER BLOCK | | |
|---|---|---|
| VOLTAGE | TEST POINT | G F |
| +26 VDC (BULK) (W/O TAG 25) | LVPS (A5) J3-18 | 1.2 |
| +26 VDC (BULK) (W/ TAG 25) | Driver (A2) A2P207-5 | 1.2 |
| DC COM (W/O TAG 25) | LVPS (A5) J3-17 | 1.2 |
| DC COM (W/ TAG 25) | Driver (A2) A2P207-7 | 1.2 |
| +5 VDC (W/O TAG 25) | LVPS (A5) J3-14 | 1.2 |
| +5 VDC (W/ TAG 25) | Driver (A2) A2P214-4 | 1.2 |
| DC COM (W/O TAG 25) | LVPS (A5) J3-11 | 1.2 |
| DC COM (W/ TAG 25) | Driver (A2) A2P214-3 | 1.2 |

## 8.1 MEDIA REGISTRATION AND TRANSPORTATION (3 OF 3)

1 THE SIGNAL, NO BUCKLE SENSED (L) +5 VDC, SWITCHES THE TRANSPORT DRIVE MOTOR (MOT1) TO A SLOWER SPEED.

2 A24P1 APPROXIMATE VOLTAGES: A24P1 DISCONNECTED FROM DRIVE MOTOR PWB (A24)

CAUTION: TO PREVENT DAMAGE TO THE MOTOR COMPONENTS, TURN OFF THE POWER SWITCH (0) BEFORE DISCONNECTING ANY PLUGS.

| PIN | STANDBY VOLTAGE | [ 0703 ] VOLTAGE |
|---|---|---|
| P1-8 | +3.8 VDC | +3.8 VDC |
| P1-7 | +3.8 VDC | +3.8 VDC |
| P1-6 | 0 VDC | 0 VDC |
| P1-4 | +3.8 VDC | +3.8 VDC |

3 [ 0917 - BOND ] ENERGIZES THE TRANSPORT DRIVE MOTOR (MOT1) AND THE MOTOR ROTATES IN THE MEDIA FEED DIRECTION.

4 A24P2 APPROXIMATE RESISTANCE: A24P2 DISCONNECTED FROM DRIVE MOTOR PWB (A24)
PIN 1 TO PIN 2 = 3.4 OHMS
PIN 3 TO PIN 4 = 3.5 OHMS

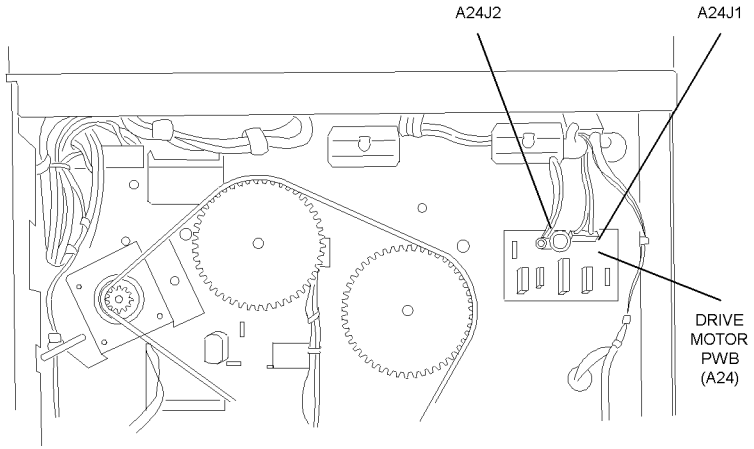


0700018A-RNO

VIEW: REAR

07018

W/ TAG 25

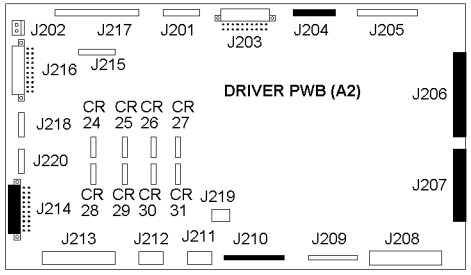


W/ TAG 27

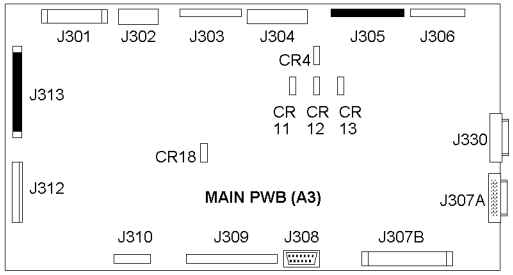


W/O TAG 25

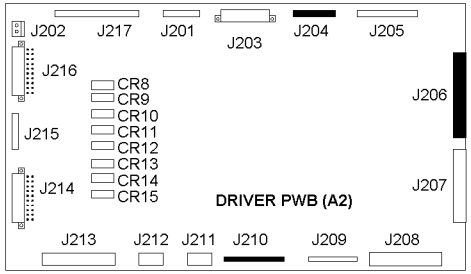


W/O TAG 27

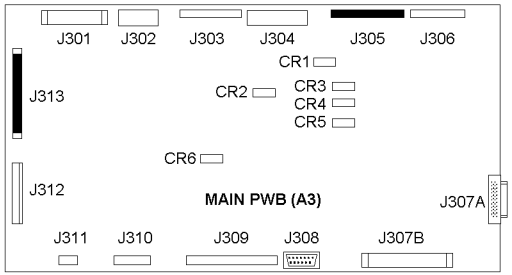


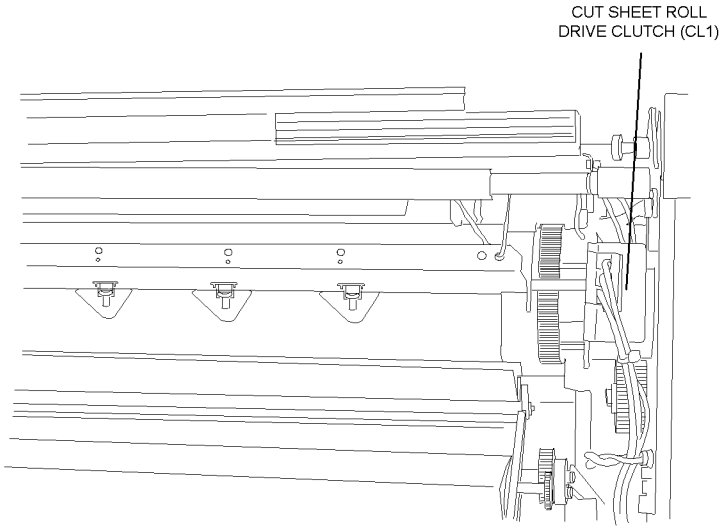


VIEW: LEFT SIDE

07019

# BSD 9.1 Charging

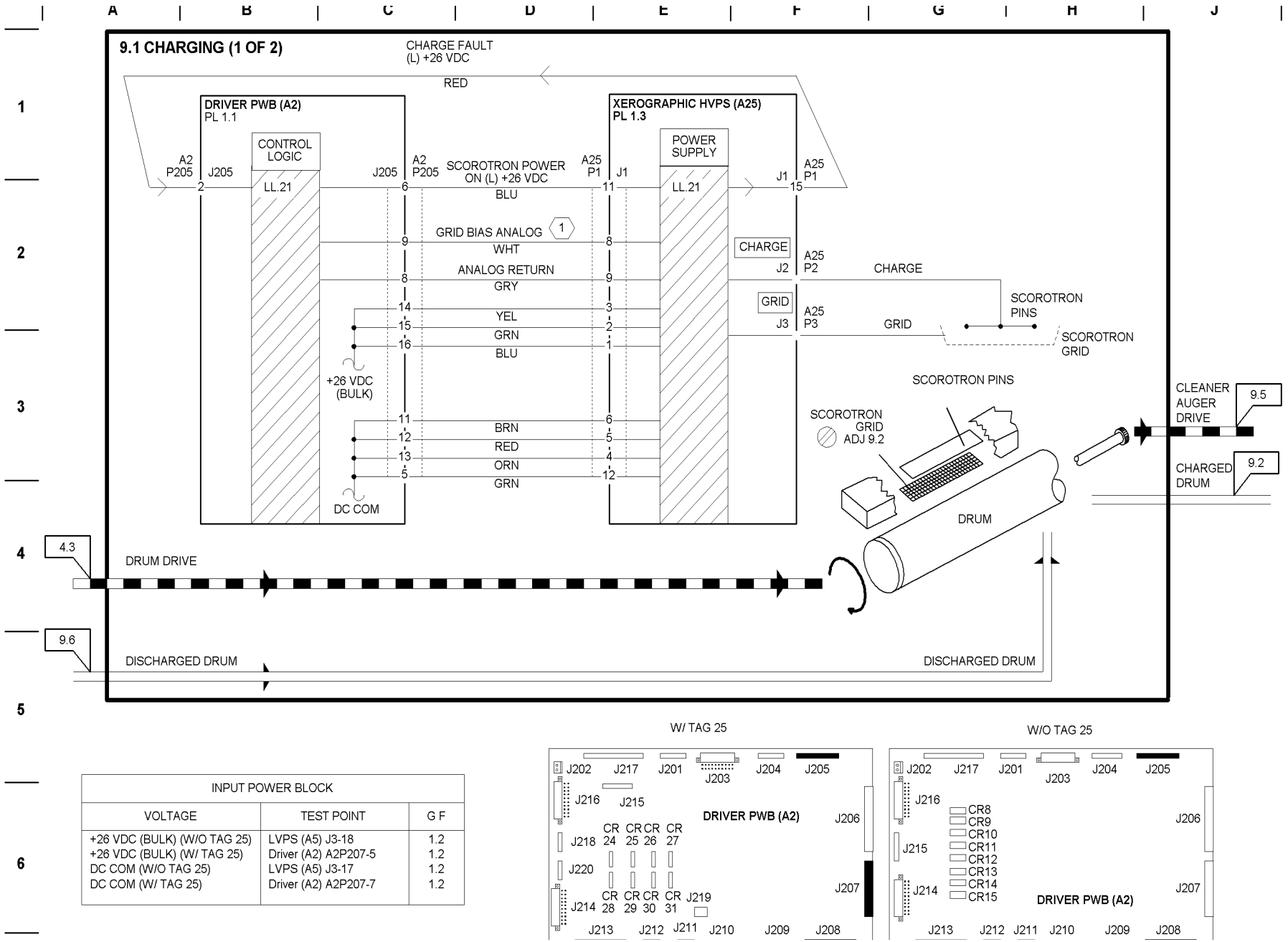


| INPUT POWER BLOCK | | |
|---|---|---|
| VOLTAGE | TEST POINT | G F |
| +26 VDC (BULK) (W/O TAG 25) | LVPS (A5) J3-18 | 1.2 |
| +26 VDC (BULK) (W/ TAG 25) | Driver (A2) A2P207-5 | 1.2 |
| DC COM (W/O TAG 25) | LVPS (A5) J3-17 | 1.2 |
| DC COM (W/ TAG 25) | Driver (A2) A2P207-7 | 1.2 |

## 9.1 CHARGING (2 OF 2)

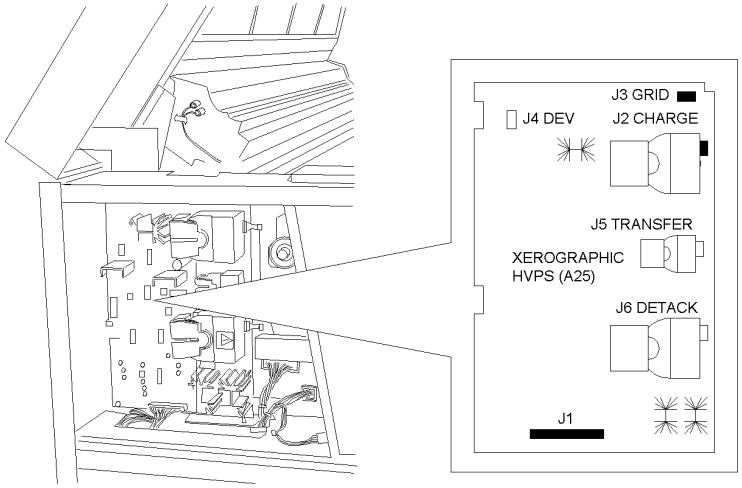


VIEW: REAR (TOP) 07020

1 THE GRID BIAS ANALOG SIGNAL (0 TO 15 VDC) IS ADJUSTED WHEN PERFORMING THE ELECTROSTATIC SERIES ADJUSTMENT (ADJ 9.2).

# BSD 9.2 Exposure

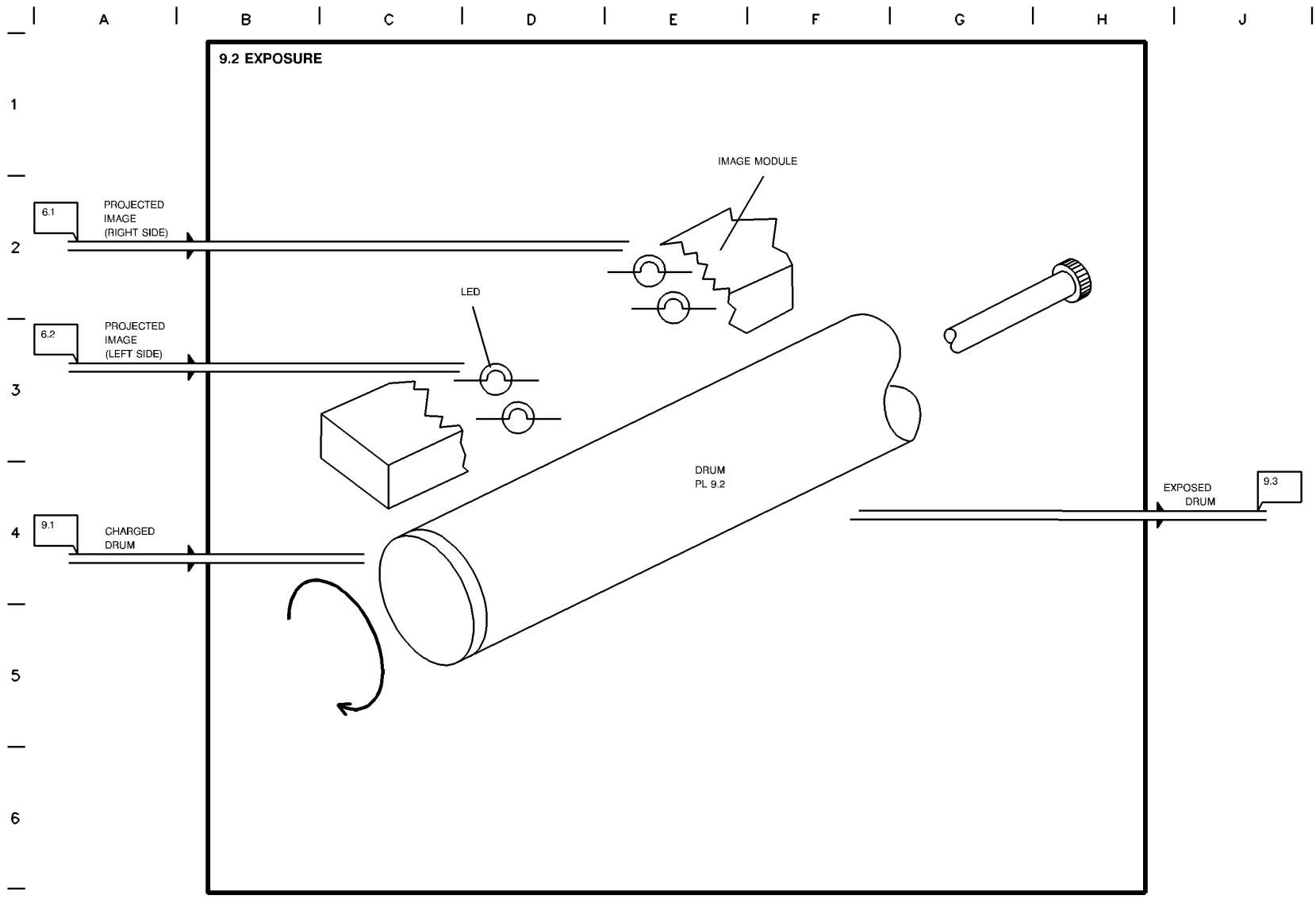

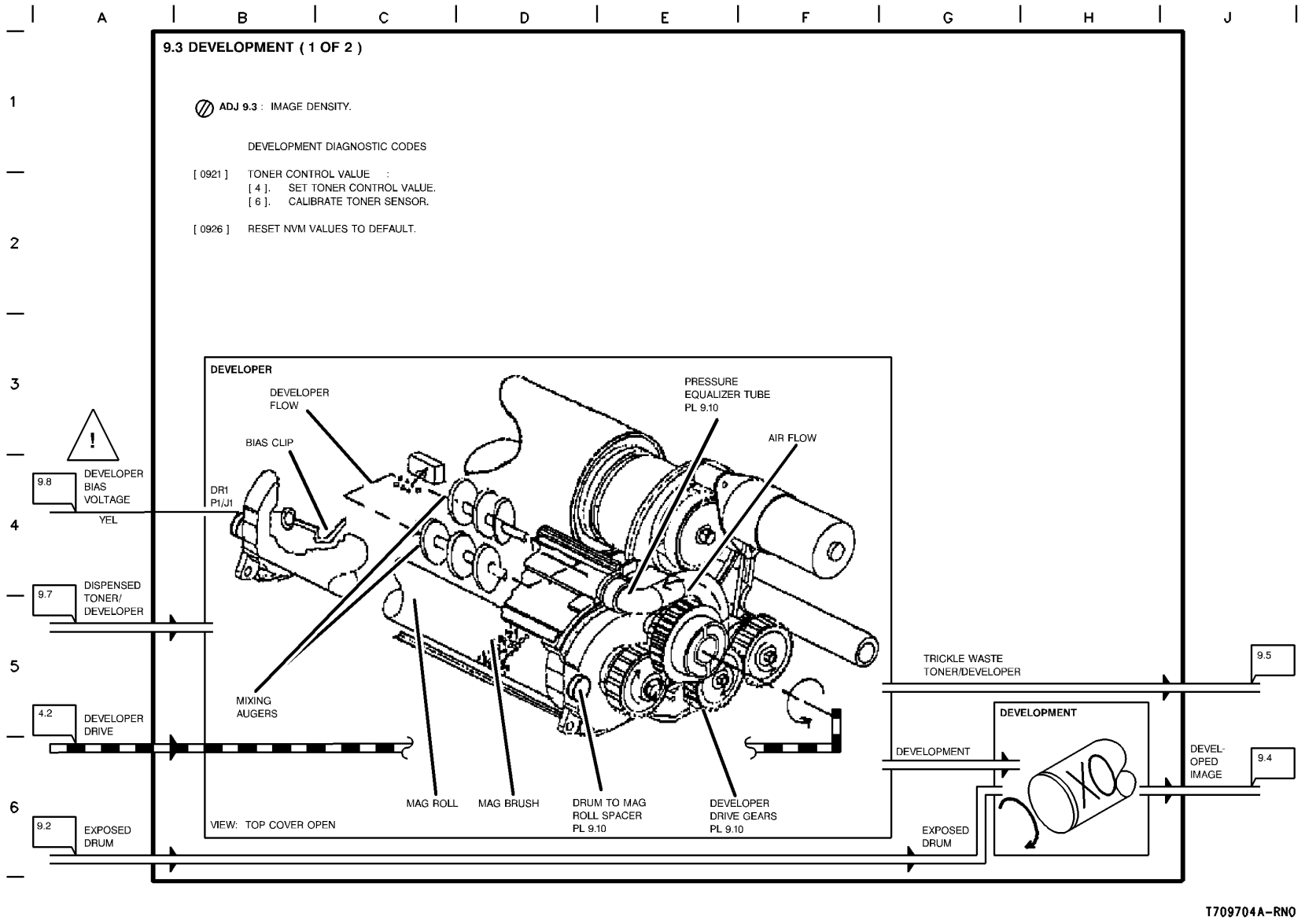
9.3 DEVELOPMENT ( 1 OF 2 )
ADJ 9.3 : IMAGE DENSITY.
DEVELOPMENT DIAGNOSTIC CODES
[ 0921 ] TONER CONTROL VALUE :
[ 4 ]. SET TONER CONTROL VALUE.
[ 6 ]. CALIBRATE TONER SENSOR.
[ 0926 ] RESET NVM VALUES TO DEFAULT.
DEVELOPER
DEVELOPER FLOW
BIAS CLIP
PRESSURE EQUALIZER TUBE PL 9.10
AIR FLOW
DR1 P1/J1
MIXING AUGERS
MAG ROLL
MAG BRUSH
DRUM TO MAG ROLL SPACER PL 9.10
DEVELOPER DRIVE GEARS PL 9.10
VIEW: TOP COVER OPEN
9.8 DEVELOPER BIAS VOLTAGE
YEL
9.7 DISPENSED TONER/ DEVELOPER
4.2 DEVELOPER DRIVE
9.2 EXPOSED DRUM
TRICKLE WASTE TONER/DEVELOPER
9.5
DEVELOPMENT
DEVELOPMENT
DEVEL-OPED IMAGE
9.4
EXPOSED DRUM
T709704A-RNO

## 9.3 DEVELOPMENT (2 OF 2)

**WARNING**
THE DEVELOPER MODULE HAS APPRAOXIMATELY -350 VOLTS DC APPLIED TO ITS SURFACE. USE CAUTION.

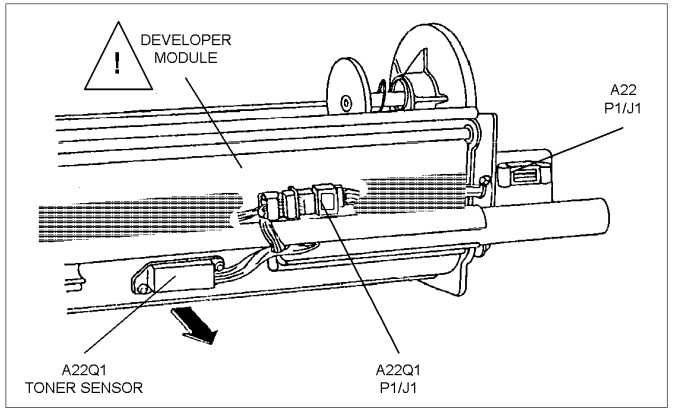


DEVELOPER HOUSING
VIEW: RIGHT REAR

SPOT #01489A

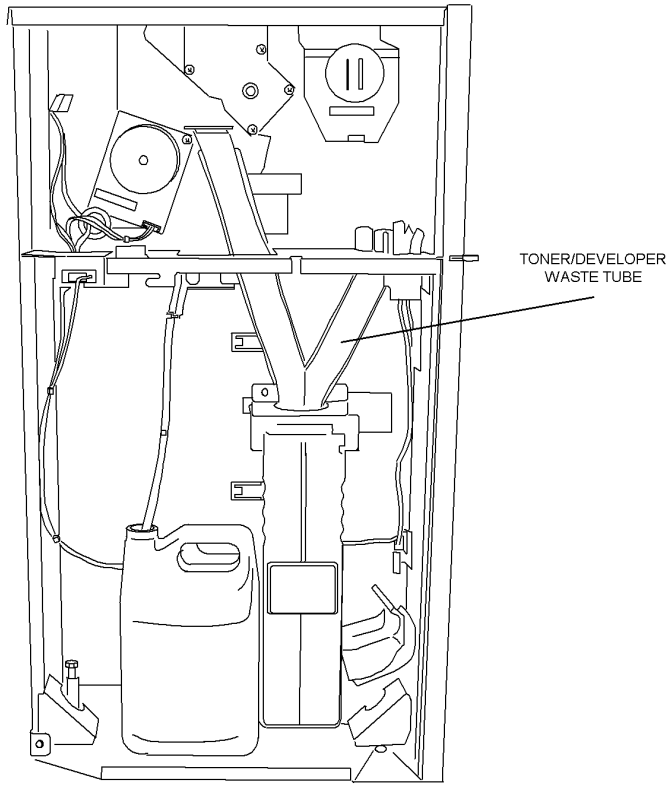


VIEW: FRONT

07021

# BSD 9.4 Image Transfer and Media Stripping

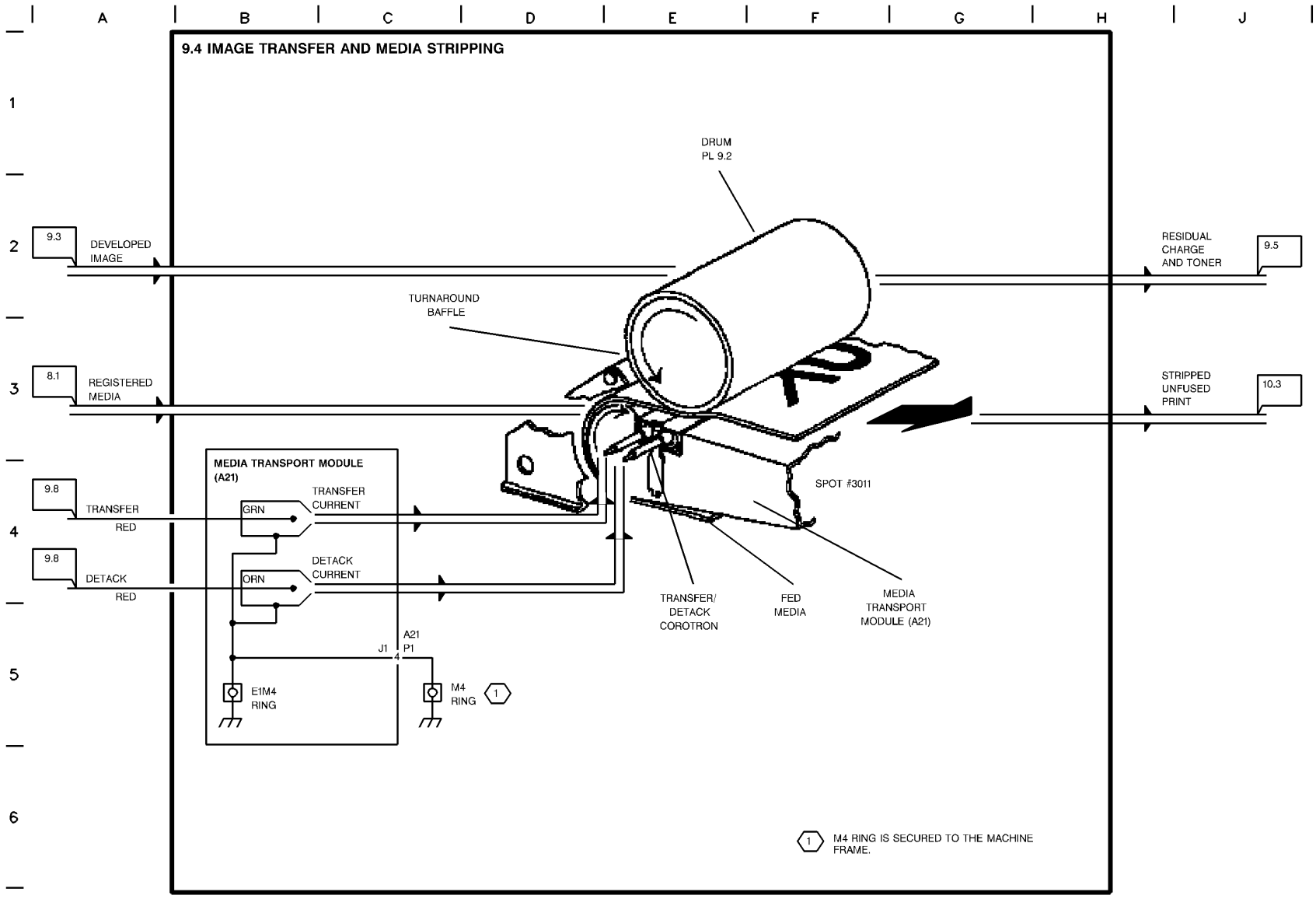

# BSD 9.5 Drum Cleaning

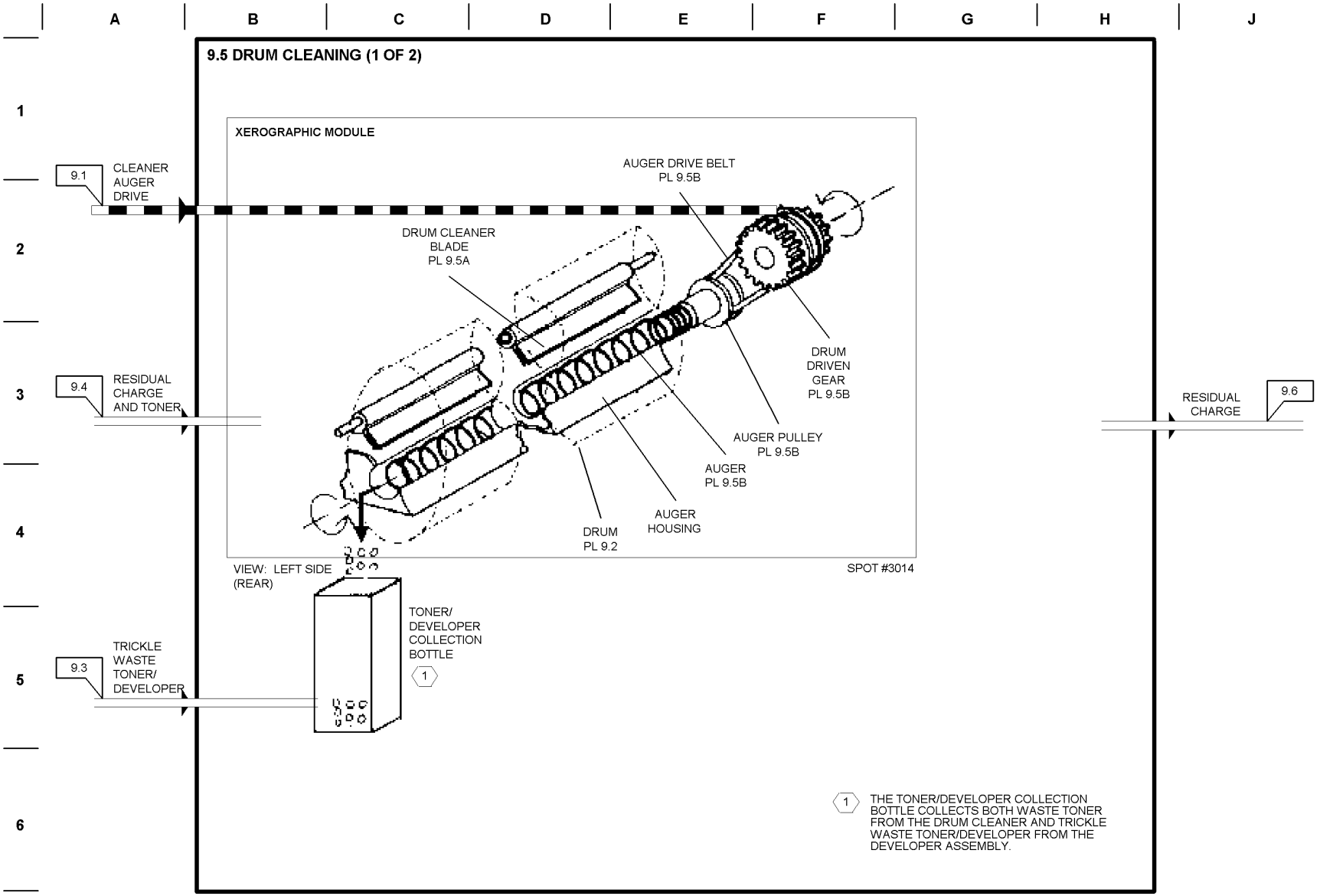

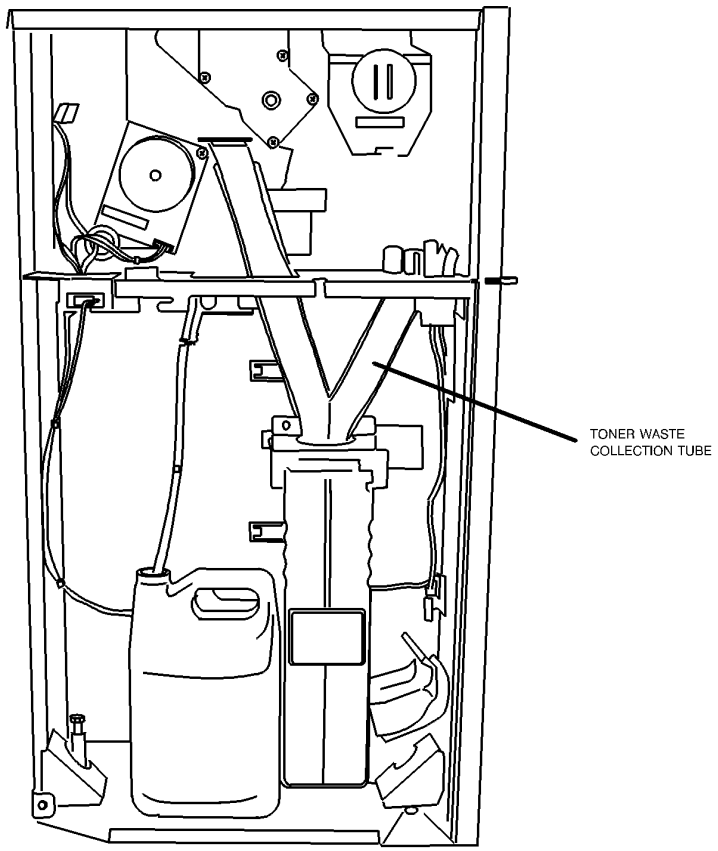


FRONT VIEW

1 2 3 4 5 6

T709708A-RNO

# BSD 9.6 Drum Discharging

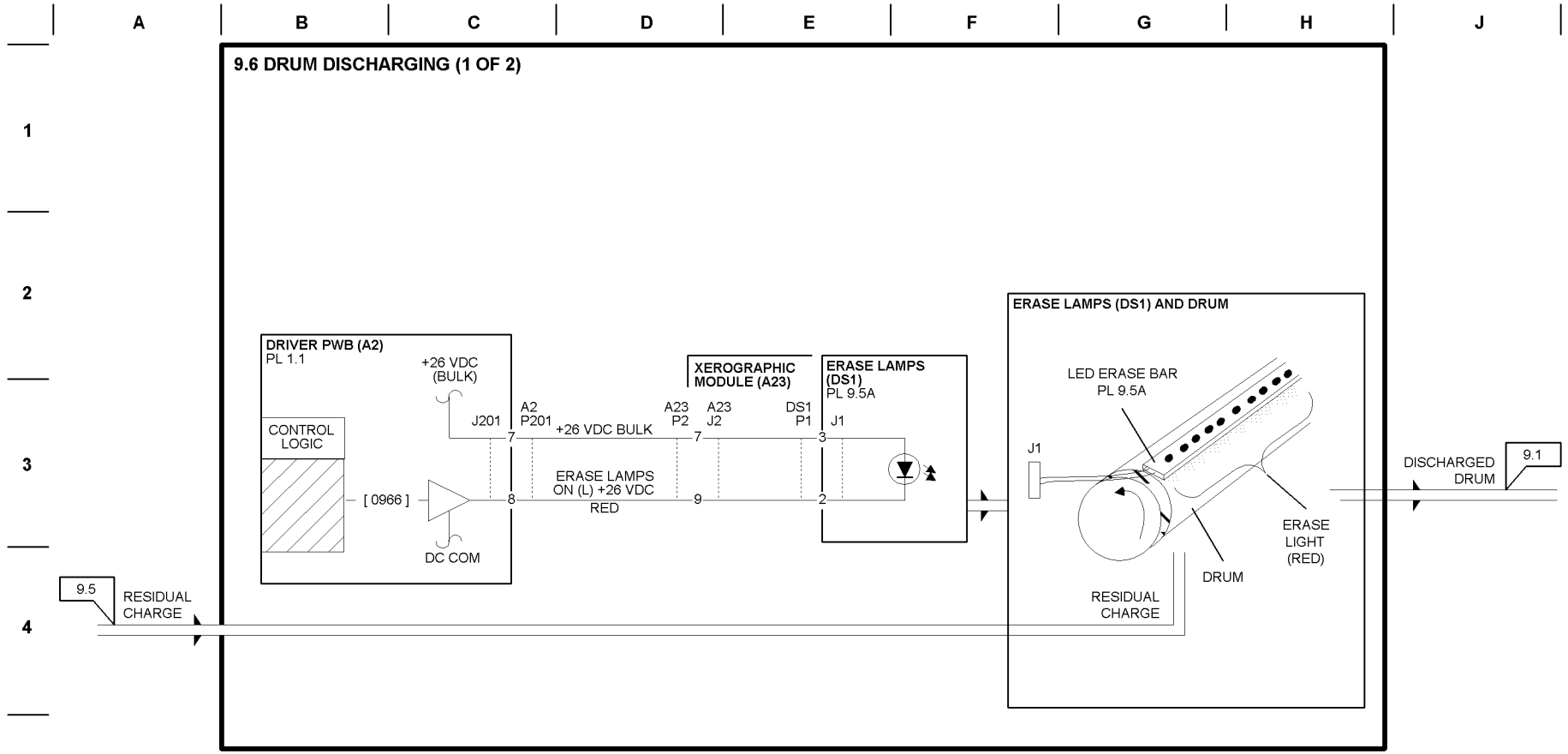


[ 0966 ] ERASE LAMP OUTPUT:

| INPUT POWER BLOCK | | |
|---|---|---|
| VOLTAGE | TEST POINT | G F |
| +26 VDC (BULK) (W/O TAG 25) | LVPS (A5) J3-18 | 1.2 |
| +26 VDC (BULK) (W/ TAG 25) | Driver (A2) A2P207-5 | 1.2 |
| DC COM (W/O TAG 25) | LVPS (A5) J3-17 | 1.2 |
| DC COM (W/ TAG 25) | Driver (A2) A2P207-7 | 1.2 |

## 9.6 DRUM DISCHARGING (2 OF 2)

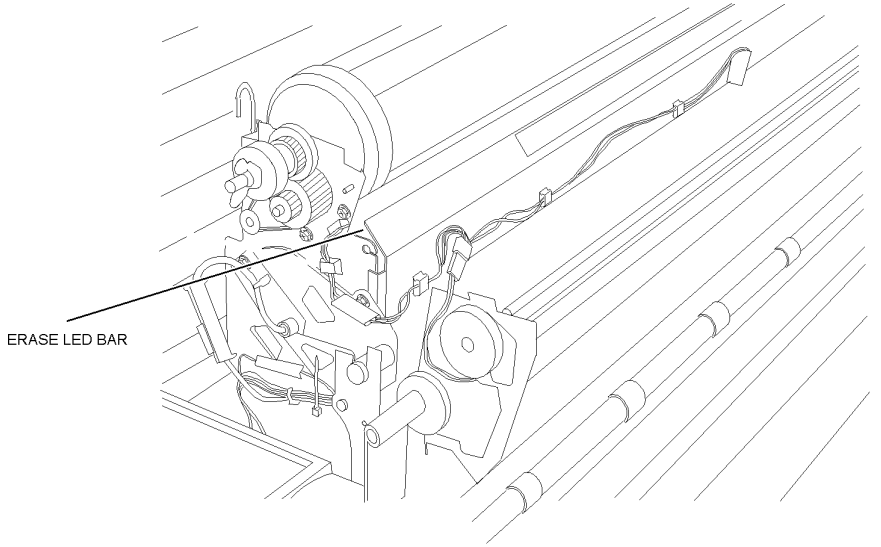


VIEW: LEFT (REAR) 07022

# BSD 9.7 Toner/Developer Dispense

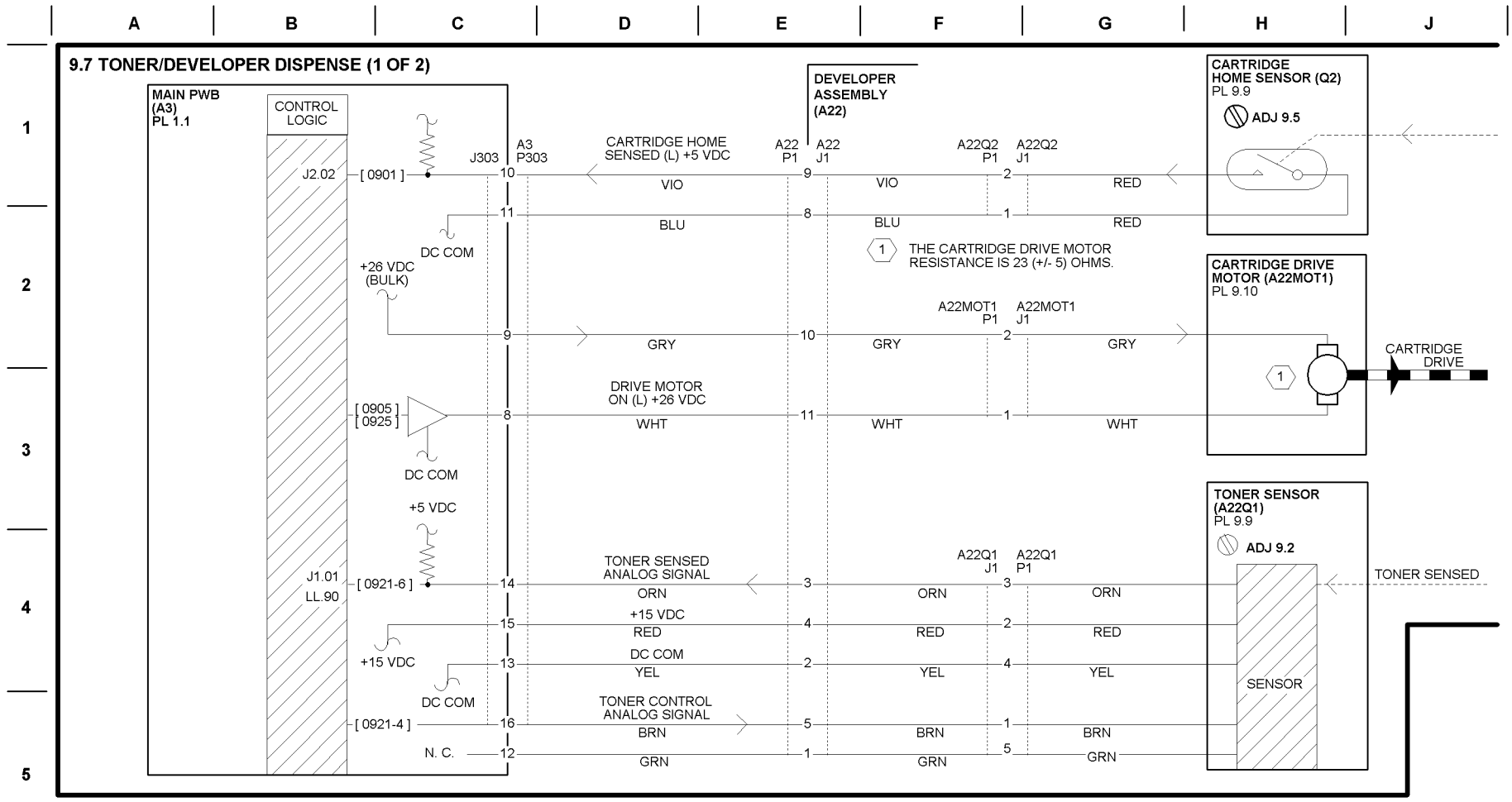


| INPUT POWER BLOCK | | |
|---|---|---|
| VOLTAGE | TEST POINT | G F |
| +26 VDC (BULK) (W/O TAG 25) | LVPS (A5) J3-18 | 1.2 |
| +26 VDC (BULK) (W/ TAG 25) | Driver (A2) A2P207-5 | 1.2 |
| DC COM (W/O TAG 25) | LVPS (A5) J3-17 | 1.2 |
| DC COM (W/ TAG 25) | Driver (A2) A2P207-7 | 1.2 |
| +5 VDC (W/O TAG 25) | LVPS (A5) J3-14 | 1.2 |
| +5 VDC (W/ TAG 25) | Driver (A2) A2P214-4 | 1.2 |
| DC COM (W/O TAG 25) | LVPS (A5) J3-11 | 1.2 |
| DC COM (W/ TAG 25) | Driver (A2) A2P214-3 | 1.2 |

W/O TAG 27

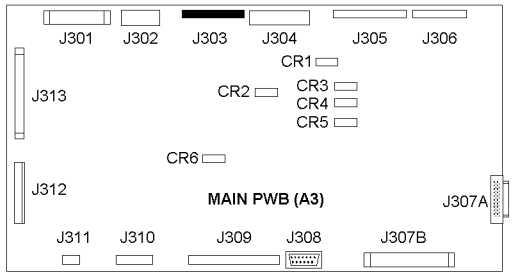


W/ TAG 27

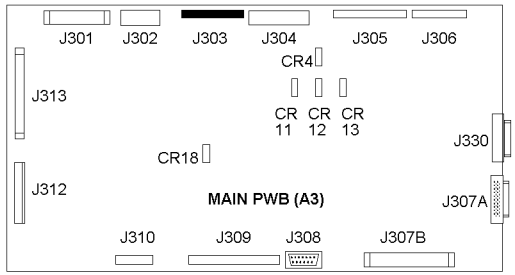

## 9.7 TONER/DEVELOPER DISPENSE (2 OF 2)

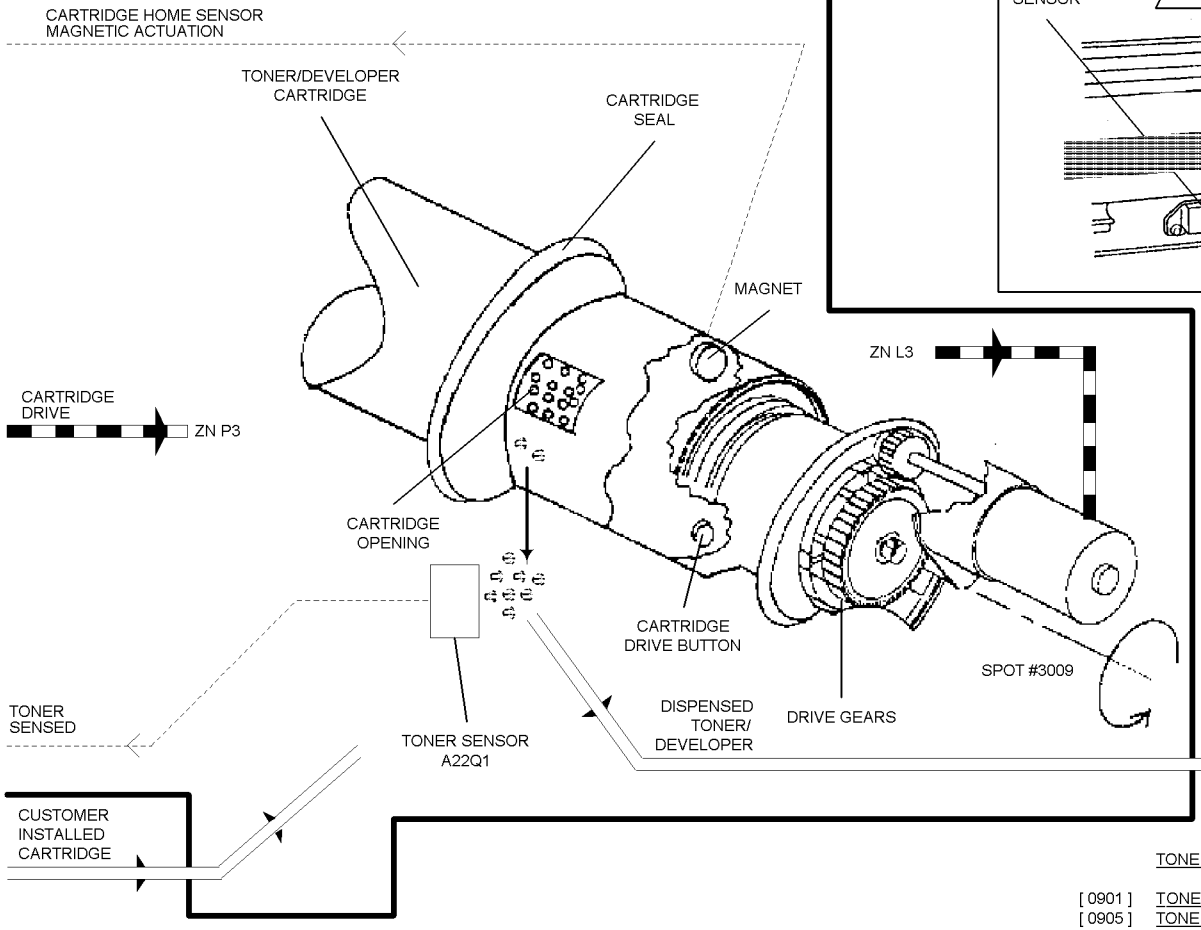


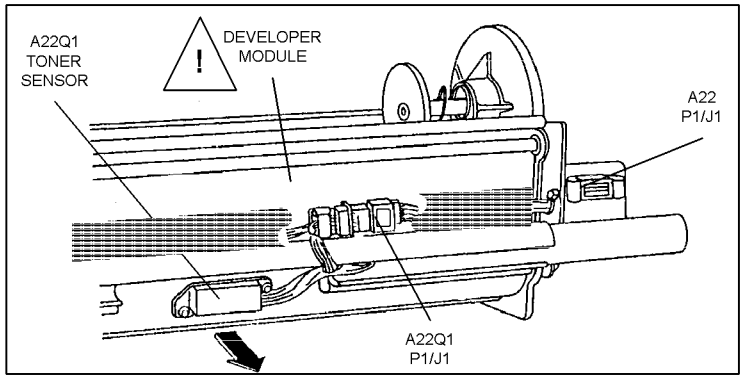


DEVELOPER HOUSING
VIEW: RIGHT REAR

SPOT #01489A

**WARNING**
THE DEVELOPER MODULE HAS APPRAOXIMATELY -350 VOLTS DC APPLIED TO ITS SURFACE. USE CAUTION.

TONER / DEVELOPER DISPENSE DIAGNOSTIC CODES

[ 0901 ] TONER HOME SENSOR: (INPUT)
[ 0905 ] TONER MOTOR : (OUTPUT)
[ 0922 ] DISABLE OF TONER FAULTS : THIS ENABLES THE MACHINE TO BE OPERATED UNTIL THE TC COMES BACK WITHIN THE ACCEPTABLE RANGE. THE MACHINE WILL AUTOMATICALLY CLEAR OUT THIS LOCATION WHEN THAT OCCURS.
[0925 ] CYCLE TONER / DEVELOPER CARTRIDGE : (OUTPUT) THIS WILL CYCLE THE CARTRIDGE ONE TIME. THE TONER / DEVELOPER CARTRIDGE WILL BE IN THE HOME POSITION WHEN THIS TEST IS COMPLETE.

# BSD 9.8 Corotron and Developer Bias Power

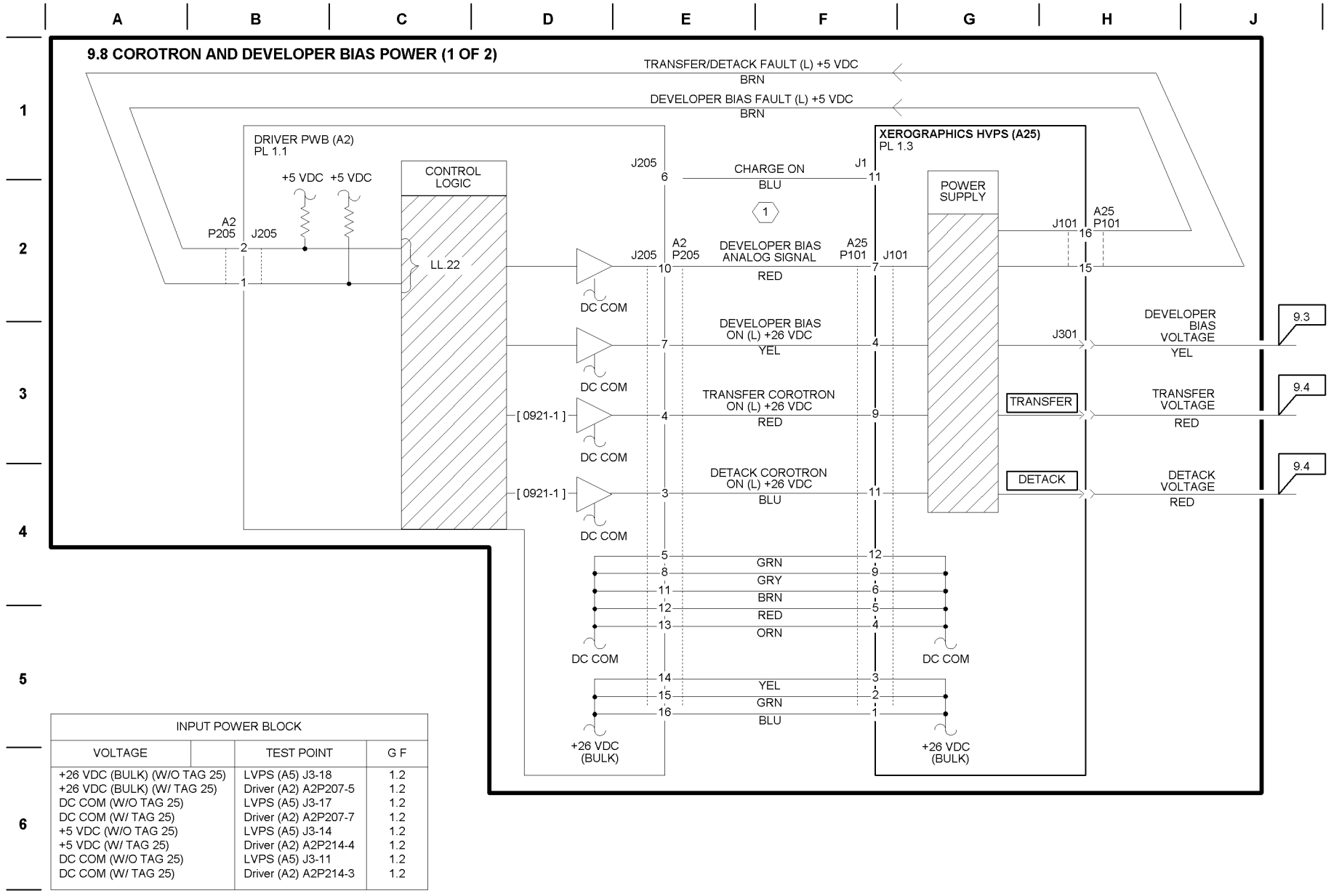


| INPUT POWER BLOCK | | | |
|---|---|---|---|
| VOLTAGE | | TEST POINT | G F |
| +26 VDC (BULK) (W/O TAG 25) | | LVPS (A5) J3-18 | 1.2 |
| +26 VDC (BULK) (W/ TAG 25) | | Driver (A2) A2P207-5 | 1.2 |
| DC COM (W/O TAG 25) | | LVPS (A5) J3-17 | 1.2 |
| DC COM (W/ TAG 25) | | Driver (A2) A2P207-7 | 1.2 |
| +5 VDC (W/O TAG 25) | | LVPS (A5) J3-14 | 1.2 |
| +5 VDC (W/ TAG 25) | | Driver (A2) A2P214-4 | 1.2 |
| DC COM (W/O TAG 25) | | LVPS (A5) J3-11 | 1.2 |
| DC COM (W/ TAG 25) | | Driver (A2) A2P214-3 | 1.2 |

## 9.8 COROTRON AND DEVELOPER BIAS POWER (2 OF 2)

1 THE DEVELOPER BIAS ANALOG SIGNAL CONTROLS THE DEVELOPER HOUSING MAG ROLL VOLTAGE.

W/ TAG 25

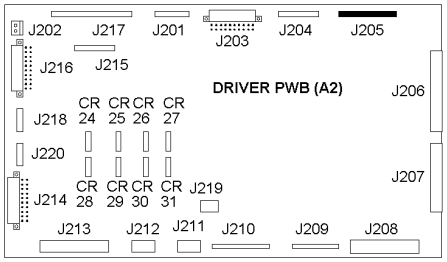


W/O TAG 25

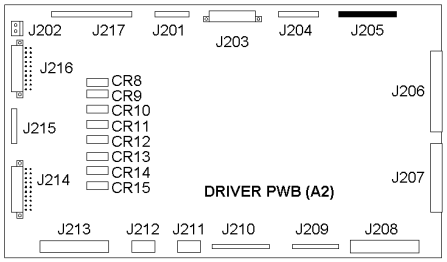


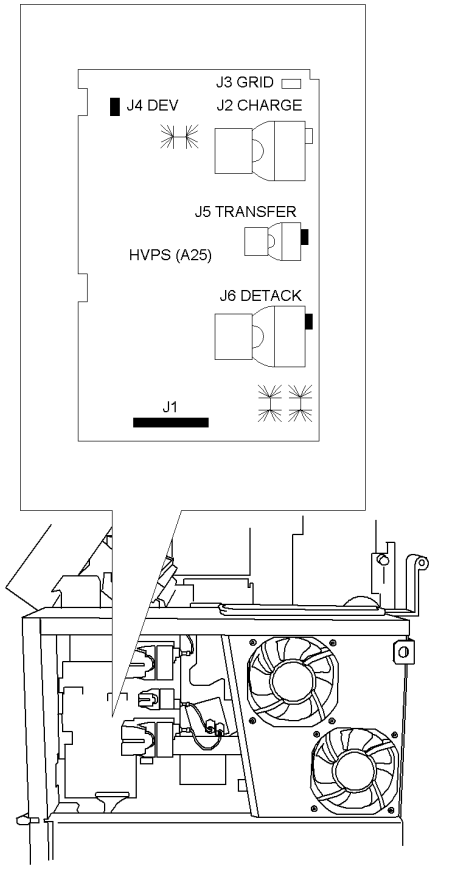


VIEW: REAR (TOP)

PHOTO #0030

# BSD 10.1 Fuser Heat (W/ O TAG/ MOD 25 AND 50)

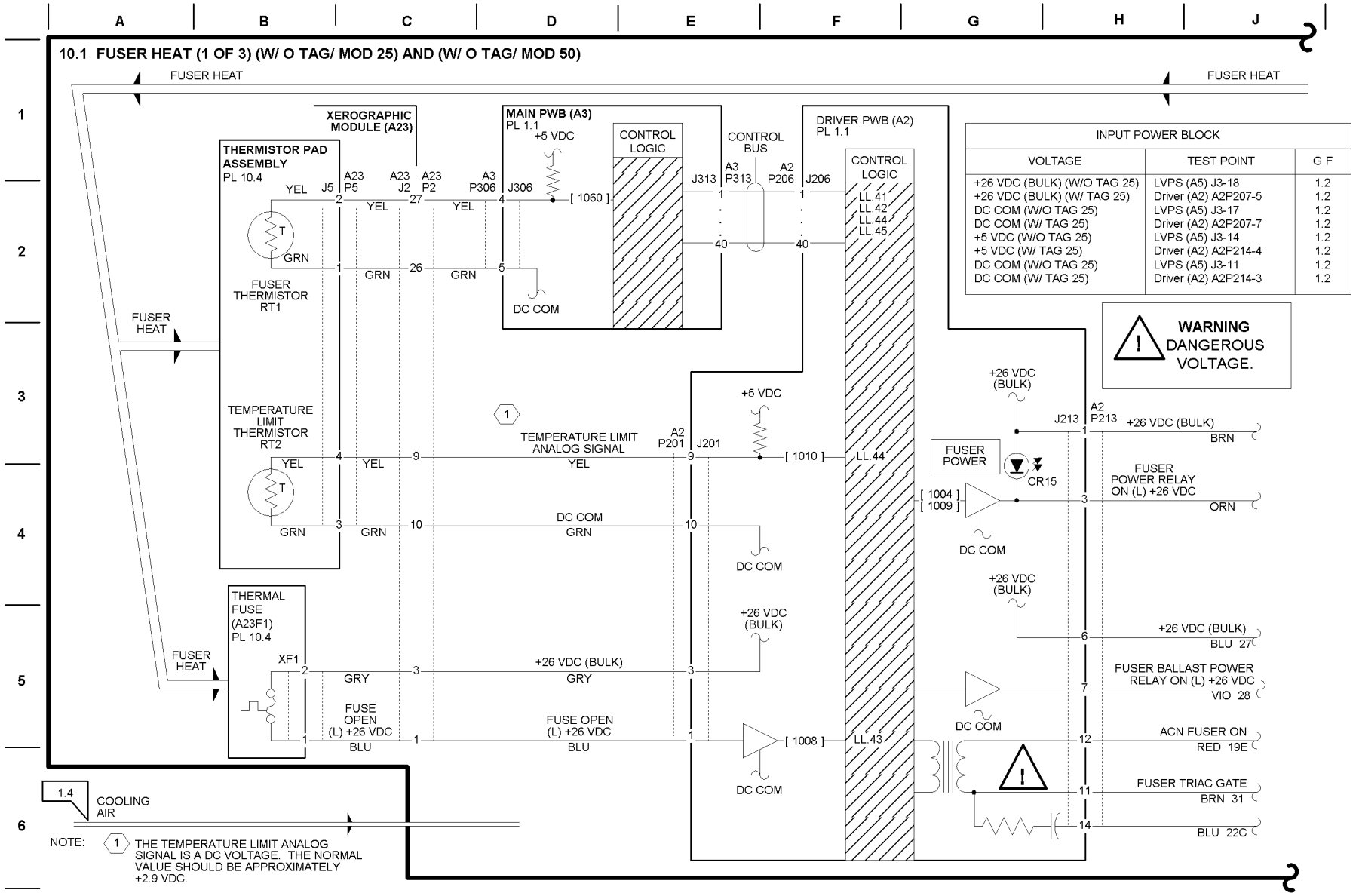

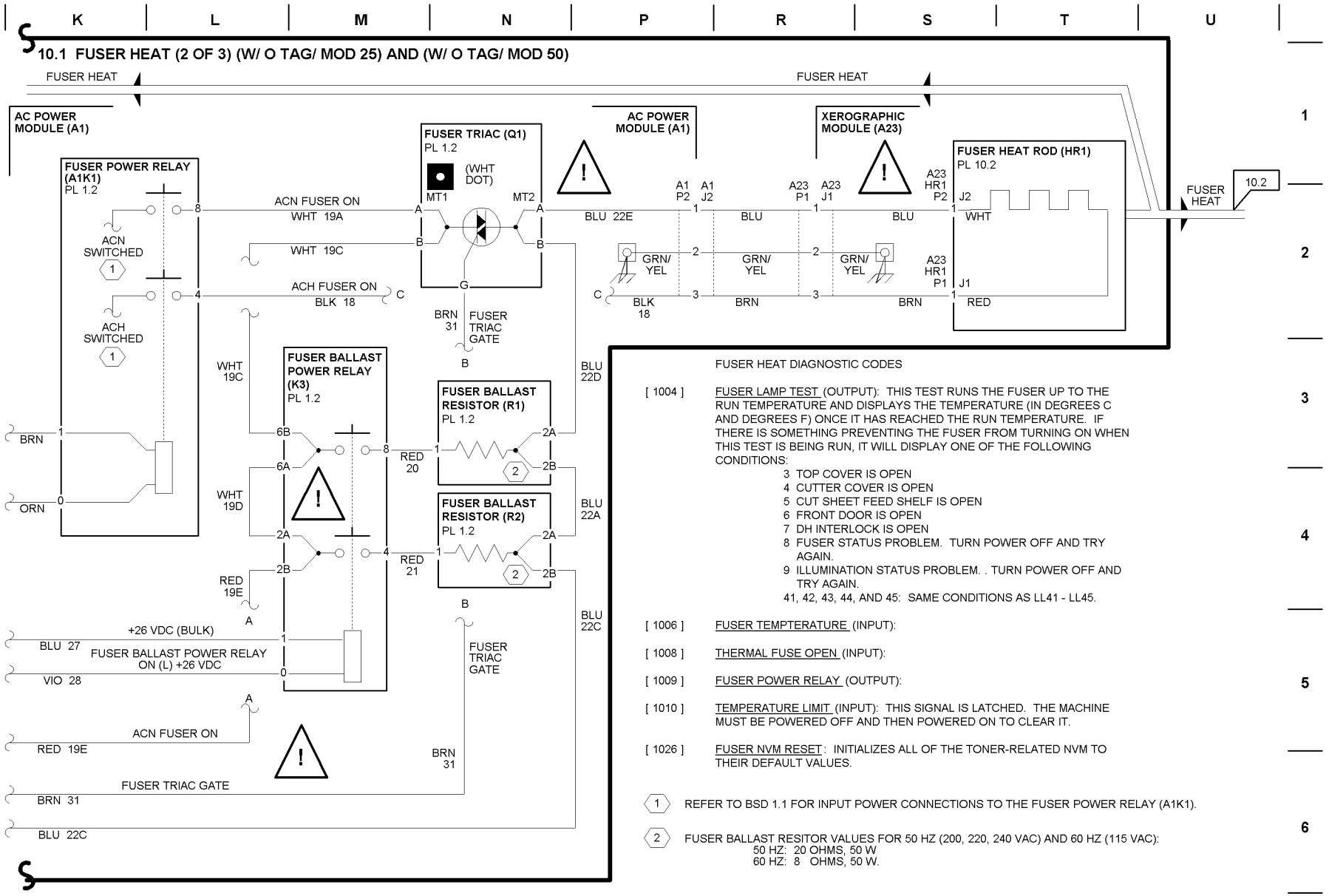


FUSER HEAT DIAGNOSTIC CODES

[ 1004 ] FUSER LAMP TEST (OUTPUT): THIS TEST RUNS THE FUSER UP TO THE RUN TEMPERATURE AND DISPLAYS THE TEMPERATURE (IN DEGREES C AND DEGREES F) ONCE IT HAS REACHED THE RUN TEMPERATURE. IF THERE IS SOMETHING PREVENTING THE FUSER FROM TURNING ON WHEN THIS TEST IS BEING RUN, IT WILL DISPLAY ONE OF THE FOLLOWING CONDITIONS:

- 3 TOP COVER IS OPEN
- 4 CUTTER COVER IS OPEN
- 5 CUT SHEET FEED SHELF IS OPEN
- 6 FRONT DOOR IS OPEN
- 7 DH INTERLOCK IS OPEN
- 8 FUSER STATUS PROBLEM. TURN POWER OFF AND TRY AGAIN.
- 9 ILLUMINATION STATUS PROBLEM. . TURN POWER OFF AND TRY AGAIN.
- 41, 42, 43, 44, AND 45: SAME CONDITIONS AS LL41 - LL45.

[ 1006 ] FUSER TEMPTERATURE (INPUT):

[ 1008 ] THERMAL FUSE OPEN (INPUT):

[ 1009 ] FUSER POWER RELAY (OUTPUT):

[ 1010 ] TEMPERATURE LIMIT (INPUT): THIS SIGNAL IS LATCHED. THE MACHINE MUST BE POWERED OFF AND THEN POWERED ON TO CLEAR IT.

[ 1026 ] FUSER NVM RESET: INITIALIZES ALL OF THE TONER-RELATED NVM TO THEIR DEFAULT VALUES.

(1) REFER TO BSD 1.1 FOR INPUT POWER CONNECTIONS TO THE FUSER POWER RELAY (A1K1).

(2) FUSER BALLAST RESITOR VALUES FOR 50 HZ (200, 220, 240 VAC) AND 60 HZ (115 VAC):
50 HZ: 20 OHMS, 50 W
60 HZ: 8 OHMS, 50 W.

## 10.1 FUSER HEAT (3 OF 3) (W/ O TAG/ MOD 25) AND (W/ O TAG/ MOD 50)

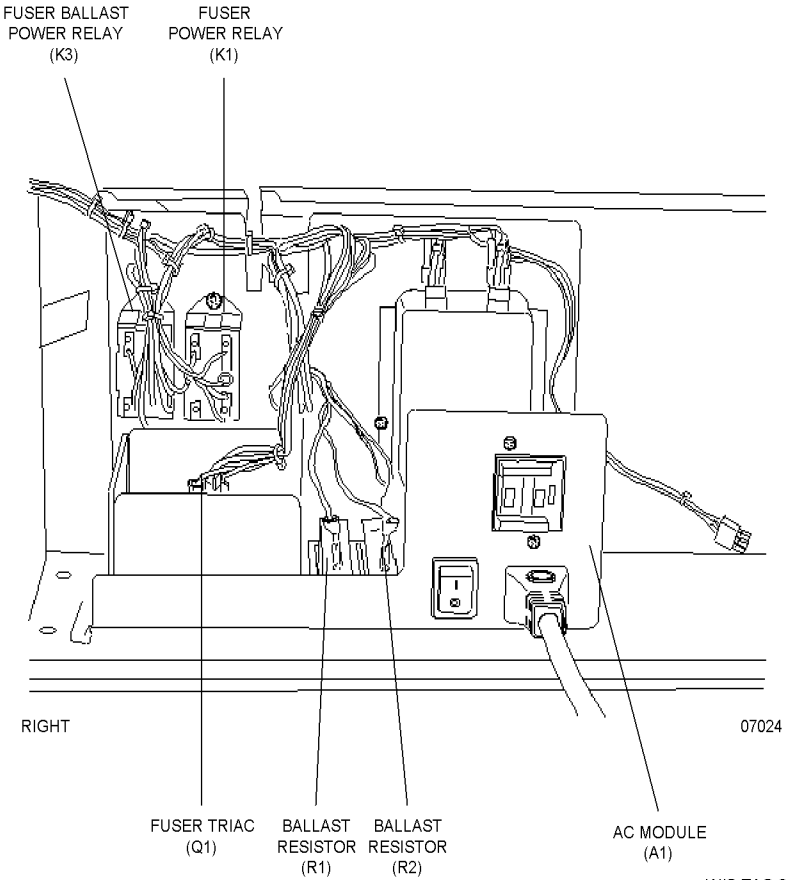


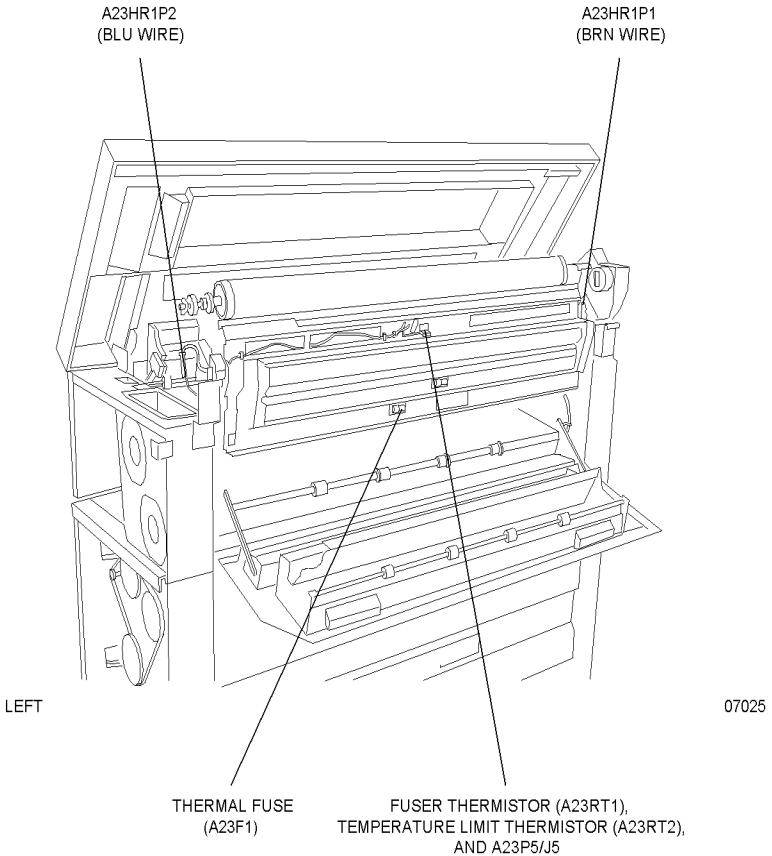


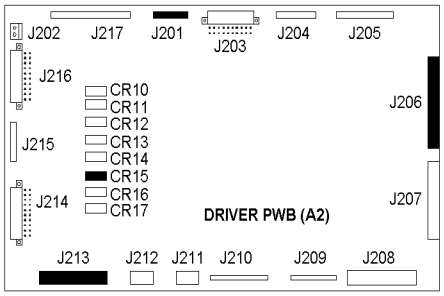


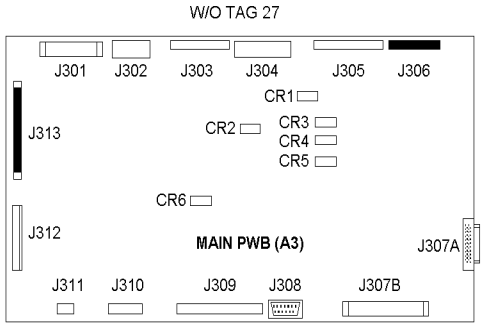


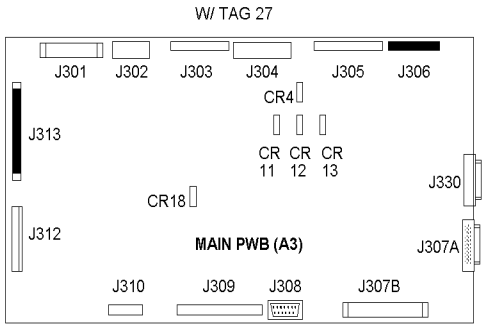

# BSD 10.1 Fuser Heat (W/TAG25) AND (W/ O TAG 50)

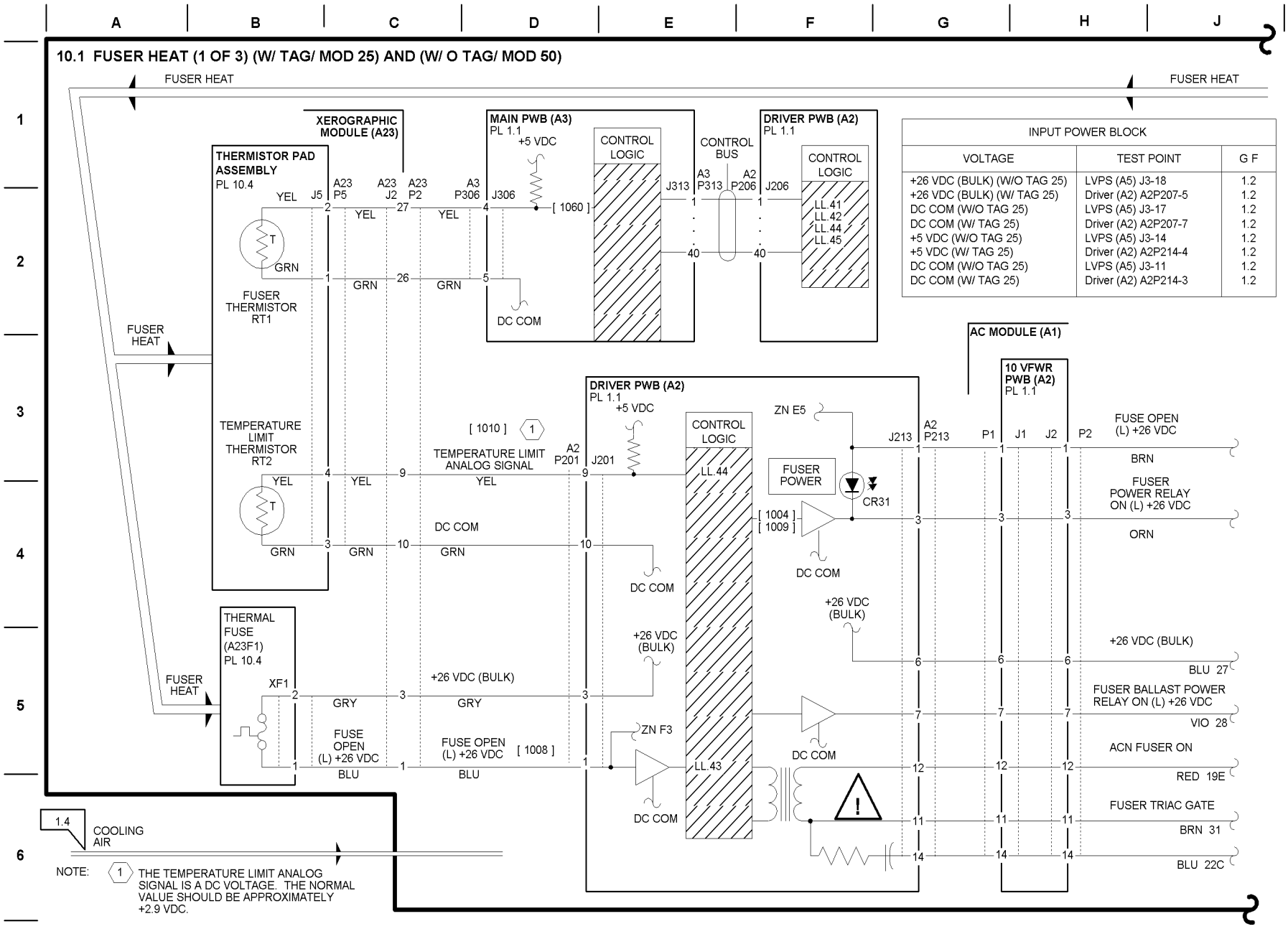


| INPUT POWER BLOCK | | |
|---|---|---|
| VOLTAGE | TEST POINT | G F |
| +26 VDC (BULK) (W/O TAG 25) | LVPS (A5) J3-18 | 1.2 |
| +26 VDC (BULK) (W/ TAG 25) | Driver (A2) A2P207-5 | 1.2 |
| DC COM (W/O TAG 25) | LVPS (A5) J3-17 | 1.2 |
| DC COM (W/ TAG 25) | Driver (A2) A2P207-7 | 1.2 |
| +5 VDC (W/O TAG 25) | LVPS (A5) J3-14 | 1.2 |
| +5 VDC (W/ TAG 25) | Driver (A2) A2P214-4 | 1.2 |
| DC COM (W/O TAG 25) | LVPS (A5) J3-11 | 1.2 |
| DC COM (W/ TAG 25) | Driver (A2) A2P214-3 | 1.2 |

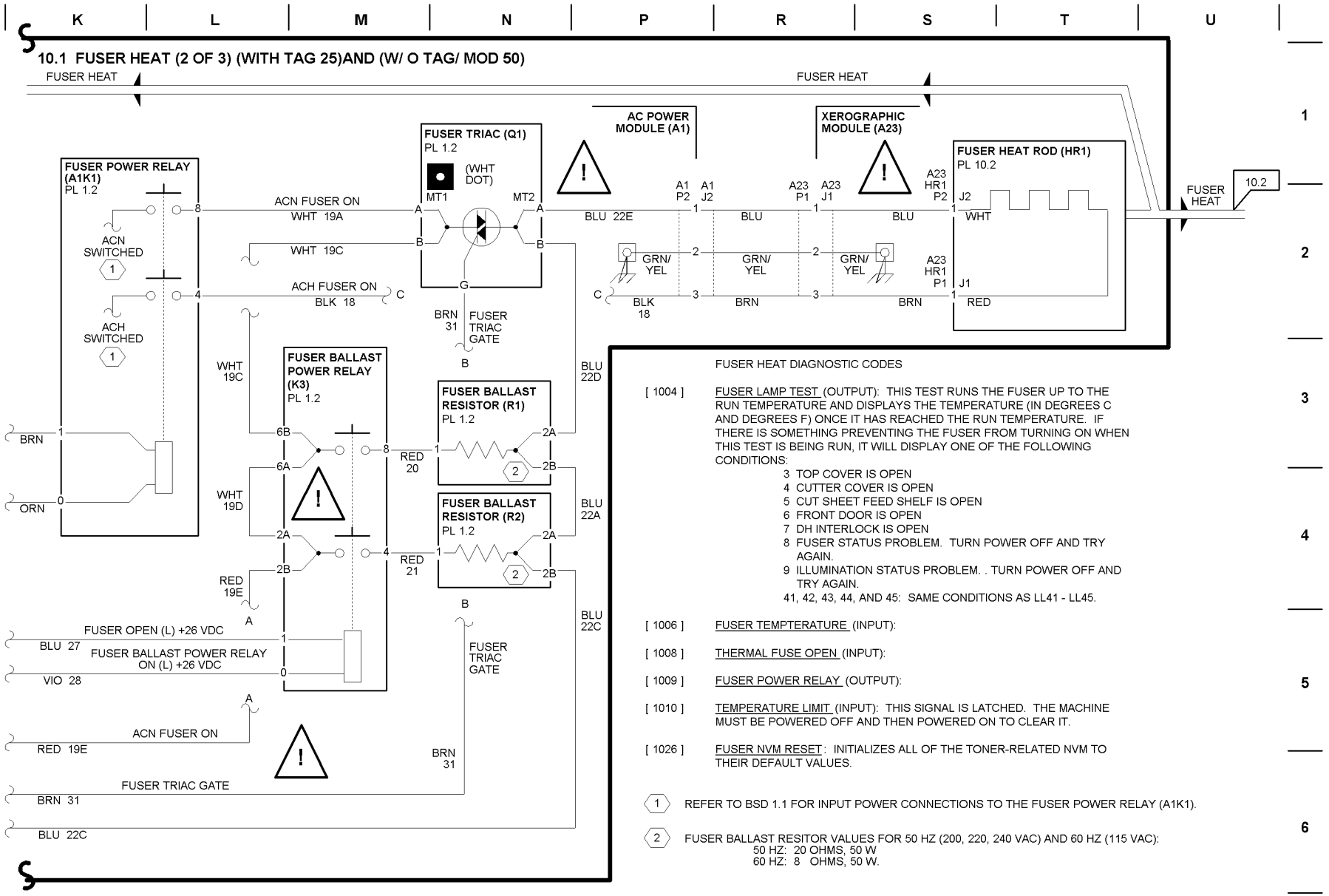


FUSER HEAT DIAGNOSTIC CODES

[ 1004 ] FUSER LAMP TEST (OUTPUT): THIS TEST RUNS THE FUSER UP TO THE RUN TEMPERATURE AND DISPLAYS THE TEMPERATURE (IN DEGREES C AND DEGREES F) ONCE IT HAS REACHED THE RUN TEMPERATURE. IF THERE IS SOMETHING PREVENTING THE FUSER FROM TURNING ON WHEN THIS TEST IS BEING RUN, IT WILL DISPLAY ONE OF THE FOLLOWING CONDITIONS:

- 3 TOP COVER IS OPEN
- 4 CUTTER COVER IS OPEN
- 5 CUT SHEET FEED SHELF IS OPEN
- 6 FRONT DOOR IS OPEN
- 7 DH INTERLOCK IS OPEN
- 8 FUSER STATUS PROBLEM. TURN POWER OFF AND TRY AGAIN.
- 9 ILLUMINATION STATUS PROBLEM. . TURN POWER OFF AND TRY AGAIN.
- 41, 42, 43, 44, AND 45: SAME CONDITIONS AS LL41 - LL45.

[ 1006 ] FUSER TEMPTERATURE (INPUT):

[ 1008 ] THERMAL FUSE OPEN (INPUT):

[ 1009 ] FUSER POWER RELAY (OUTPUT):

[ 1010 ] TEMPERATURE LIMIT (INPUT): THIS SIGNAL IS LATCHED. THE MACHINE MUST BE POWERED OFF AND THEN POWERED ON TO CLEAR IT.

[ 1026 ] FUSER NVM RESET: INITIALIZES ALL OF THE TONER-RELATED NVM TO THEIR DEFAULT VALUES.

(1) REFER TO BSD 1.1 FOR INPUT POWER CONNECTIONS TO THE FUSER POWER RELAY (A1K1).

(2) FUSER BALLAST RESITOR VALUES FOR 50 HZ (200, 220, 240 VAC) AND 60 HZ (115 VAC):
50 HZ: 20 OHMS, 50 W
60 HZ: 8 OHMS, 50 W.

## 10.1 FUSER HEAT (3 OF 3) (W/ TAG/ MOD 25) AND (W/ O TAG/ MOD 50)

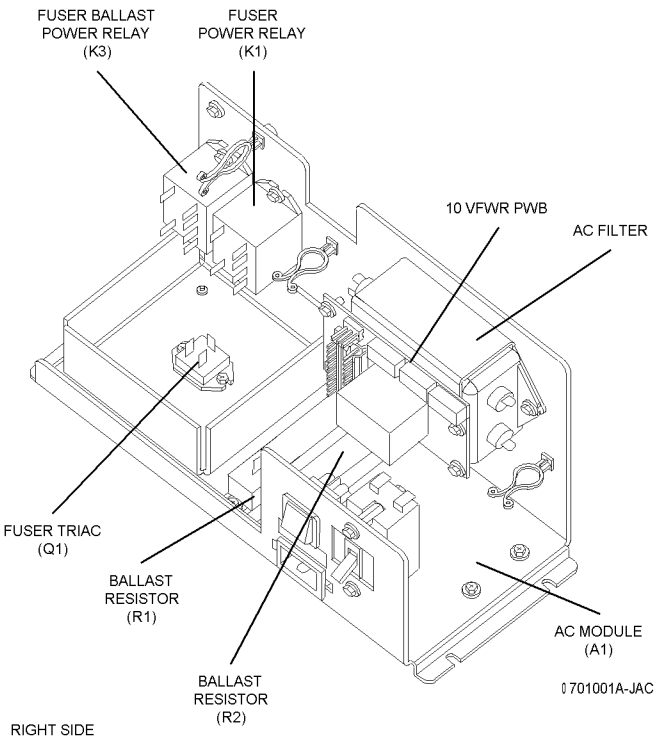


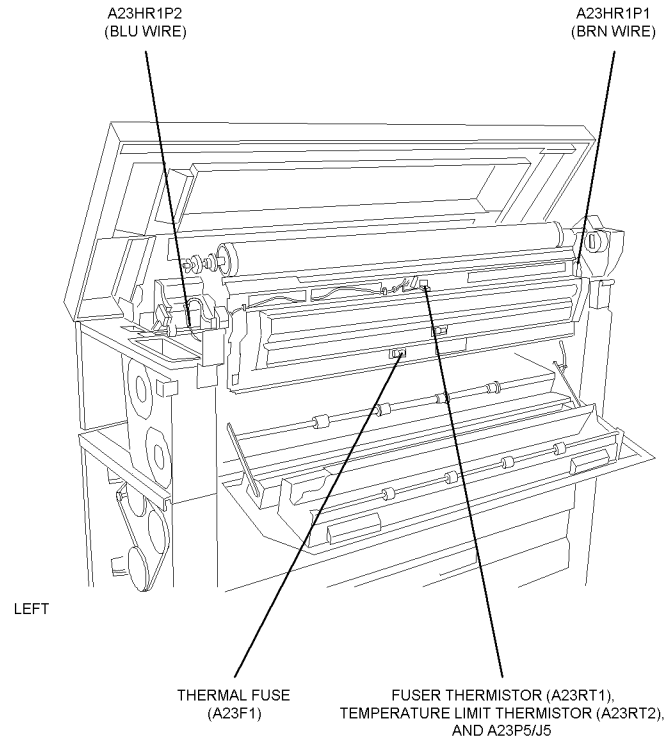


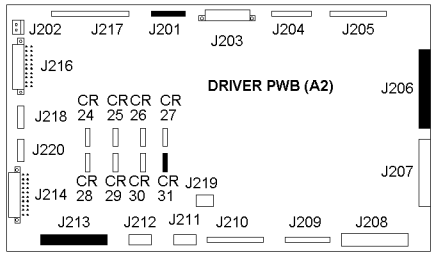


W/O TAG 27

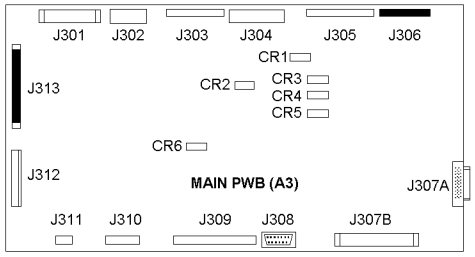


W/ TAG 27

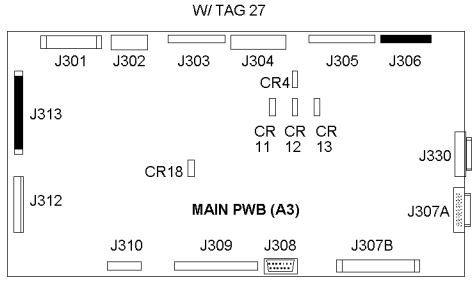

# BSD 10.1 Fuser Heat (W/25 AND TAG 50)

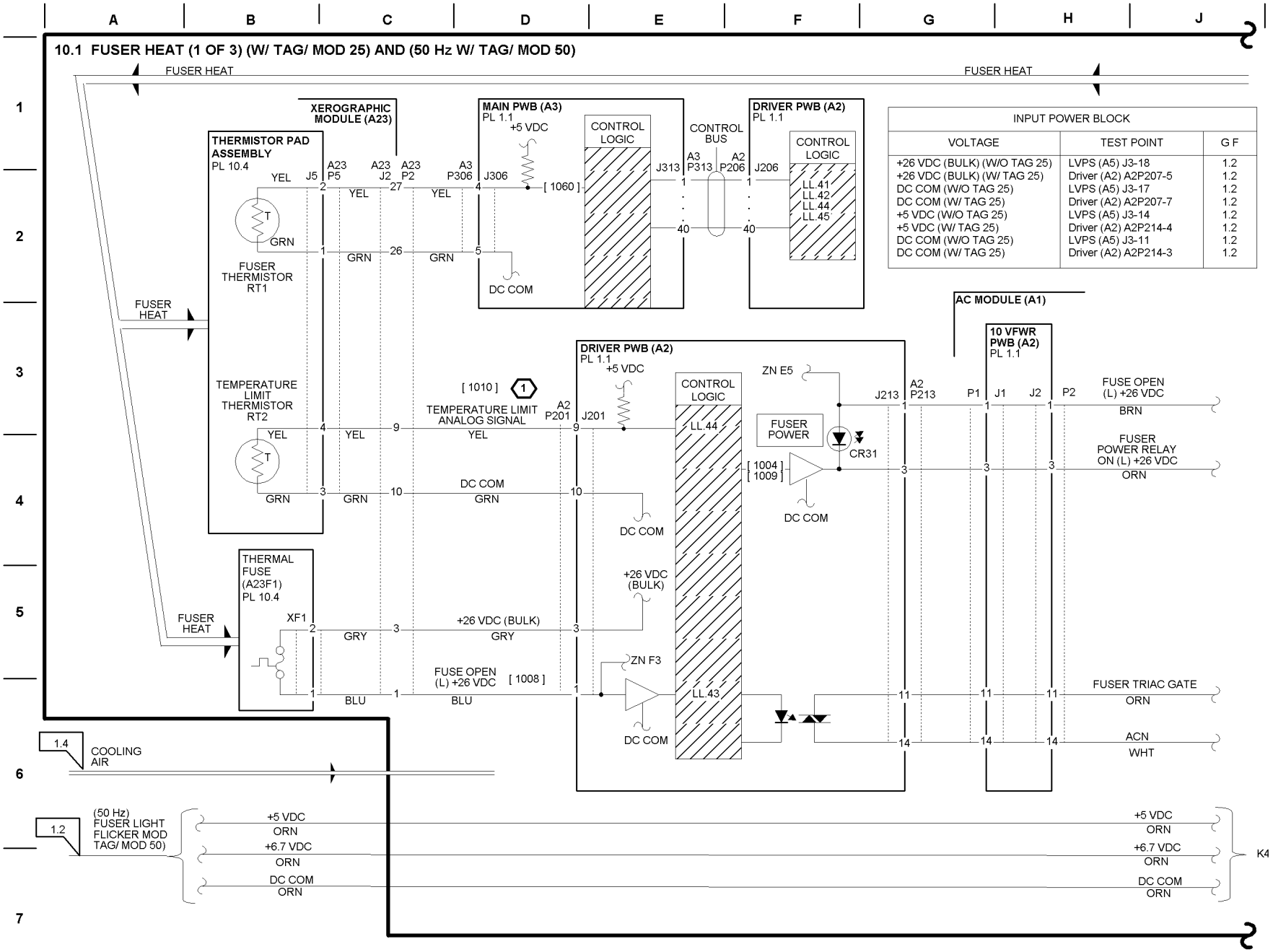


| INPUT POWER BLOCK | | |
|---|---|---|
| VOLTAGE | TEST POINT | G F |
| +26 VDC (BULK) (W/O TAG 25) | LVPS (A5) J3-18 | 1.2 |
| +26 VDC (BULK) (W/ TAG 25) | Driver (A2) A2P207-5 | 1.2 |
| DC COM (W/O TAG 25) | LVPS (A5) J3-17 | 1.2 |
| DC COM (W/ TAG 25) | Driver (A2) A2P207-7 | 1.2 |
| +5 VDC (W/O TAG 25) | LVPS (A5) J3-14 | 1.2 |
| +5 VDC (W/ TAG 25) | Driver (A2) A2P214-4 | 1.2 |
| DC COM (W/O TAG 25) | LVPS (A5) J3-11 | 1.2 |
| DC COM (W/ TAG 25) | Driver (A2) A2P214-3 | 1.2 |

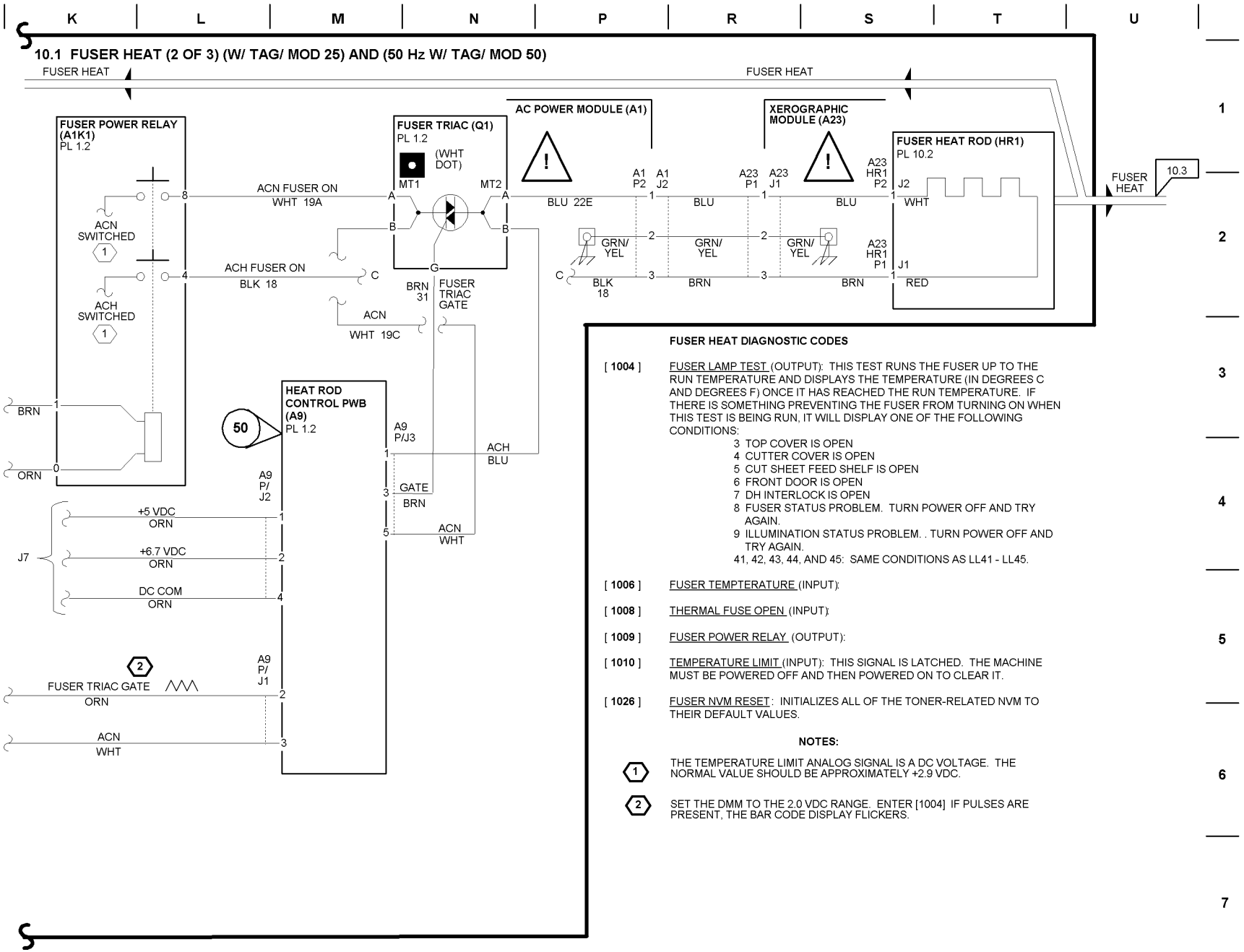


**FUSER HEAT DIAGNOSTIC CODES**

[ **1004** ] FUSER LAMP TEST (OUTPUT): THIS TEST RUNS THE FUSER UP TO THE RUN TEMPERATURE AND DISPLAYS THE TEMPERATURE (IN DEGREES C AND DEGREES F) ONCE IT HAS REACHED THE RUN TEMPERATURE. IF THERE IS SOMETHING PREVENTING THE FUSER FROM TURNING ON WHEN THIS TEST IS BEING RUN, IT WILL DISPLAY ONE OF THE FOLLOWING CONDITIONS:

- 3 TOP COVER IS OPEN
- 4 CUTTER COVER IS OPEN
- 5 CUT SHEET FEED SHELF IS OPEN
- 6 FRONT DOOR IS OPEN
- 7 DH INTERLOCK IS OPEN
- 8 FUSER STATUS PROBLEM. TURN POWER OFF AND TRY AGAIN.
- 9 ILLUMINATION STATUS PROBLEM. . TURN POWER OFF AND TRY AGAIN.
- 41, 42, 43, 44, AND 45: SAME CONDITIONS AS LL41 - LL45.

[ **1006** ] FUSER TEMPTERATURE (INPUT):

[ **1008** ] THERMAL FUSE OPEN (INPUT):

[ **1009** ] FUSER POWER RELAY (OUTPUT):

[ **1010** ] TEMPERATURE LIMIT (INPUT): THIS SIGNAL IS LATCHED. THE MACHINE MUST BE POWERED OFF AND THEN POWERED ON TO CLEAR IT.

[ **1026** ] FUSER NVM RESET: INITIALIZES ALL OF THE TONER-RELATED NVM TO THEIR DEFAULT VALUES.

**NOTES:**

1. THE TEMPERATURE LIMIT ANALOG SIGNAL IS A DC VOLTAGE. THE NORMAL VALUE SHOULD BE APPROXIMATELY +2.9 VDC.
2. SET THE DMM TO THE 2.0 VDC RANGE. ENTER [1004] IF PULSES ARE PRESENT, THE BAR CODE DISPLAY FLICKERS.

## 10.1 FUSER HEAT (3 OF 3) (W/ TAG/ MOD 25) AND (50 Hz W/ TAG/ MOD 50)

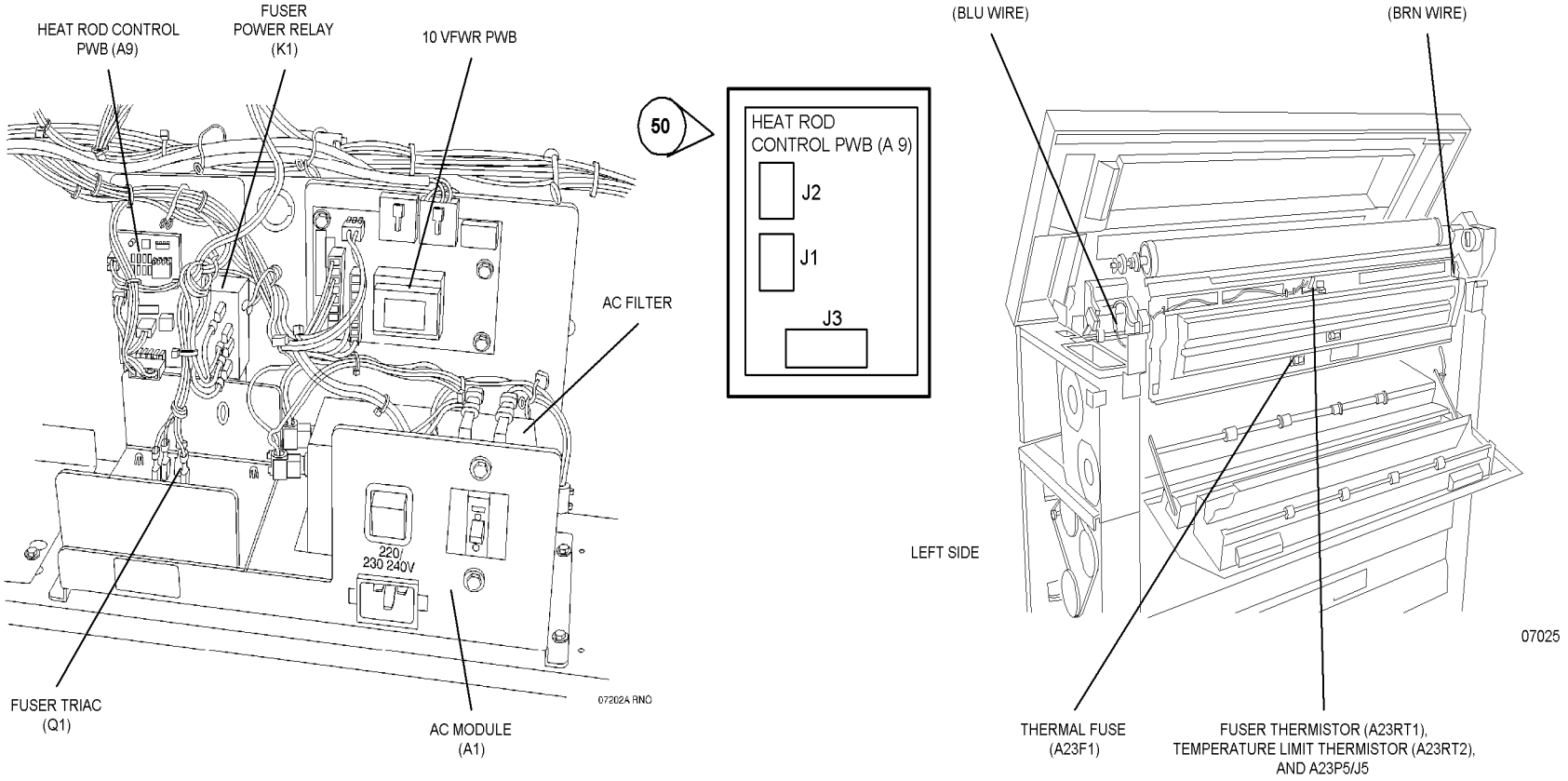


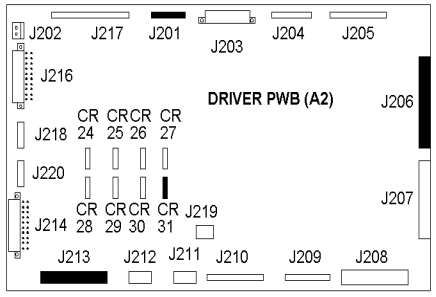


W/ O TAG 27

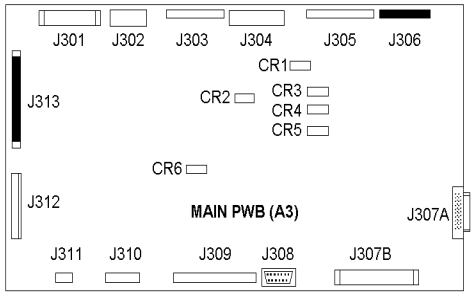


W/ TAG 27

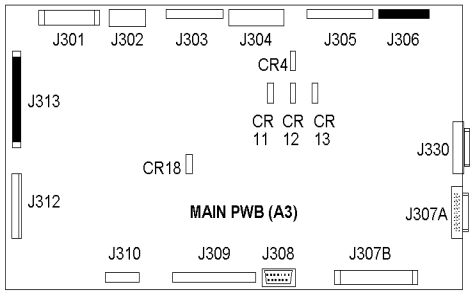

# BSD 10.2 Fuser Oil Dispensing

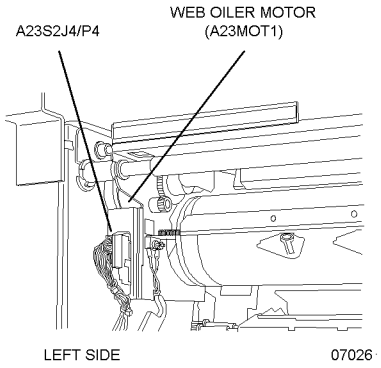


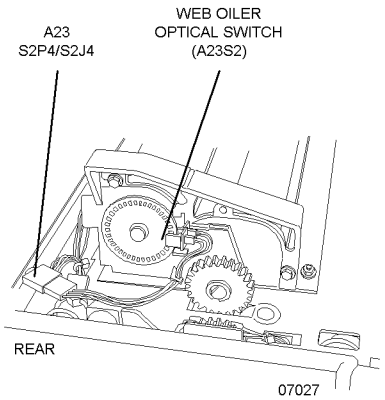


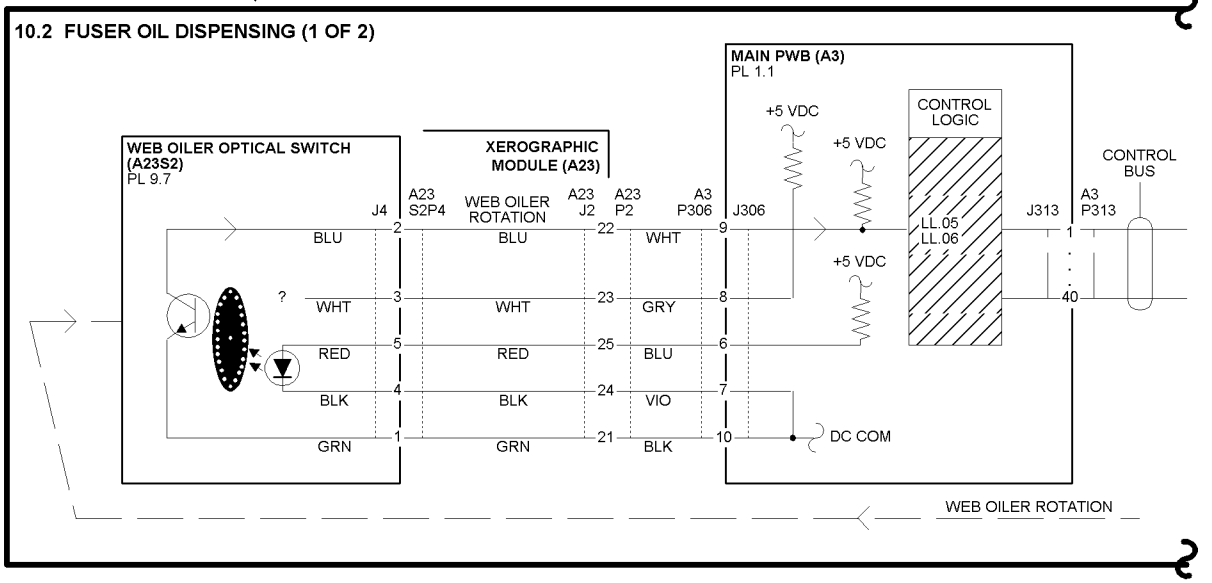


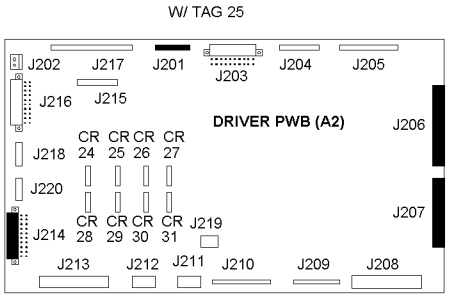


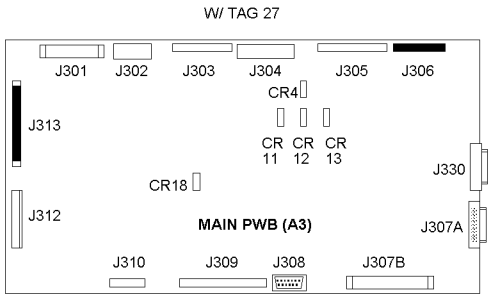


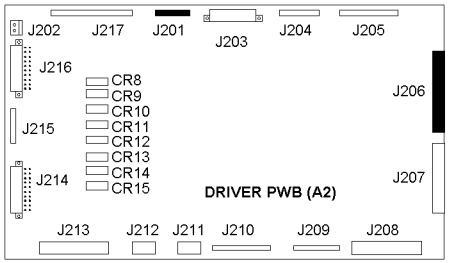


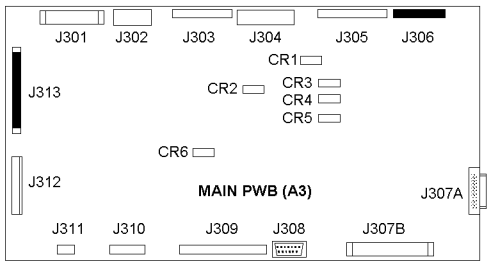


| INPUT POWER BLOCK | | |
|---|---|---|
| VOLTAGE | TEST POINT | G F |
| +26 VDC (FOR) (W/O TAG 25) | LVPS (A5) J3-3 | 1.2 |
| +26 VDC (FOR) (W/ TAG 25) | Driver (A2) A2P220-4 | 1.2 |
| DC COM (W/O TAG 25) | LVPS (A5) J3-6 | 1.2 |
| DC COM (W/ TAG 25) | Driver (A2) A2P220-6 | 1.2 |
| +5 VDC (W/O TAG 25) | LVPS (A5) J3-14 | 1.2 |
| +5 VDC (W/ TAG 25) | Driver (A2) A2P214-4 | 1.2 |
| DC COM (W/O TAG 25) | LVPS (A5) J3-11 | 1.2 |
| DC COM (W/ TAG 25) | Driver (A2) A2P214-3 | 1.2 |

## 10.2 FUSER OIL DISPENSING (2 OF 2)

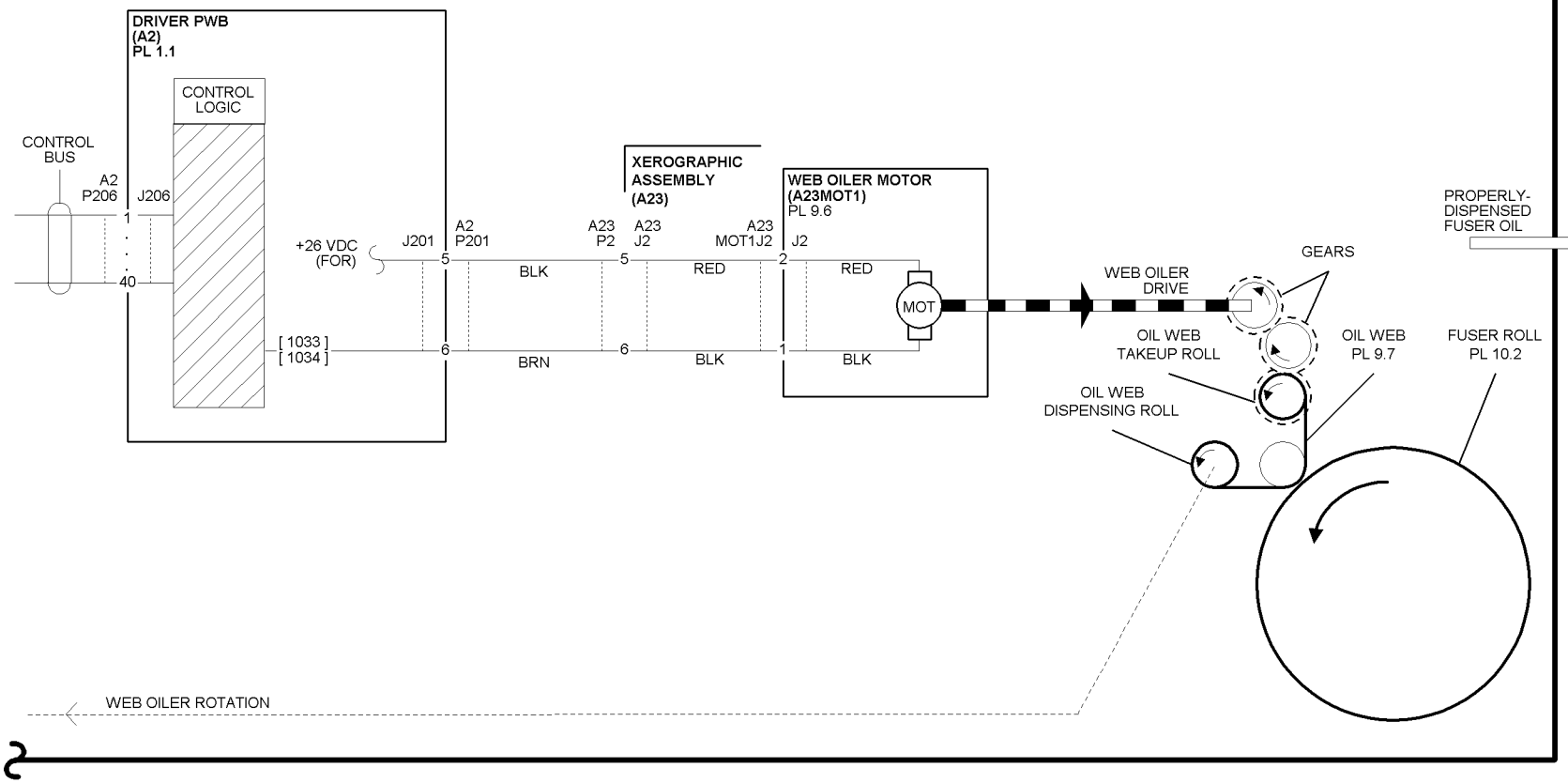


FUSER OIL DISPENSING DIAGNOSTIC CODES

[ 1030 ] RESET FUSER OIL DISPENSING TO ZERO : THIS DIAGNOSTIC SETS THE WEB COUNTER TO ZERO AND SHOULD ONLY BE USED AS PART OF THE PROCEDURE TO INSTALL A NEW OIL WEB.

[ 1031 ] SPECIFY OIL WEB POSITION : THIS DIAGNOSTIC RESETS THE WEB COUNTER AFTER NVM HAS BEEN CORRUPTED OR WHEN A PARTIALLY USED WEB IS INSTALLED.

[ 1032 ] ADJUST OIL WEB RATE: ADJUSTABLE FROM 50% TO 200% OF NOMINAL VALUE.

[ 1033 ] ADVANCE THE OIL WEB: THIS DIAGNOSTIC ADVANCES THE OIL WEB UNTIL [EXIT] IS PRESSED. THIS IS USEFUL FOR TAKING UP ANY SLACK IN A WEB AND FOR VERIFYING THE OPERATION OF THE WEB CIRCUIT.

[ 1034 ] REMAINING OIL WEB LIFE: DISPLAYS AN ESTIMATE OF THE NUMBER OF FEET (OR METERS) OF 36-INCH WIDE PRINTS THAT CAN BE MADE WITH THE CURRENT WEB.

# BSD 10.3 Fusing and Media Exit

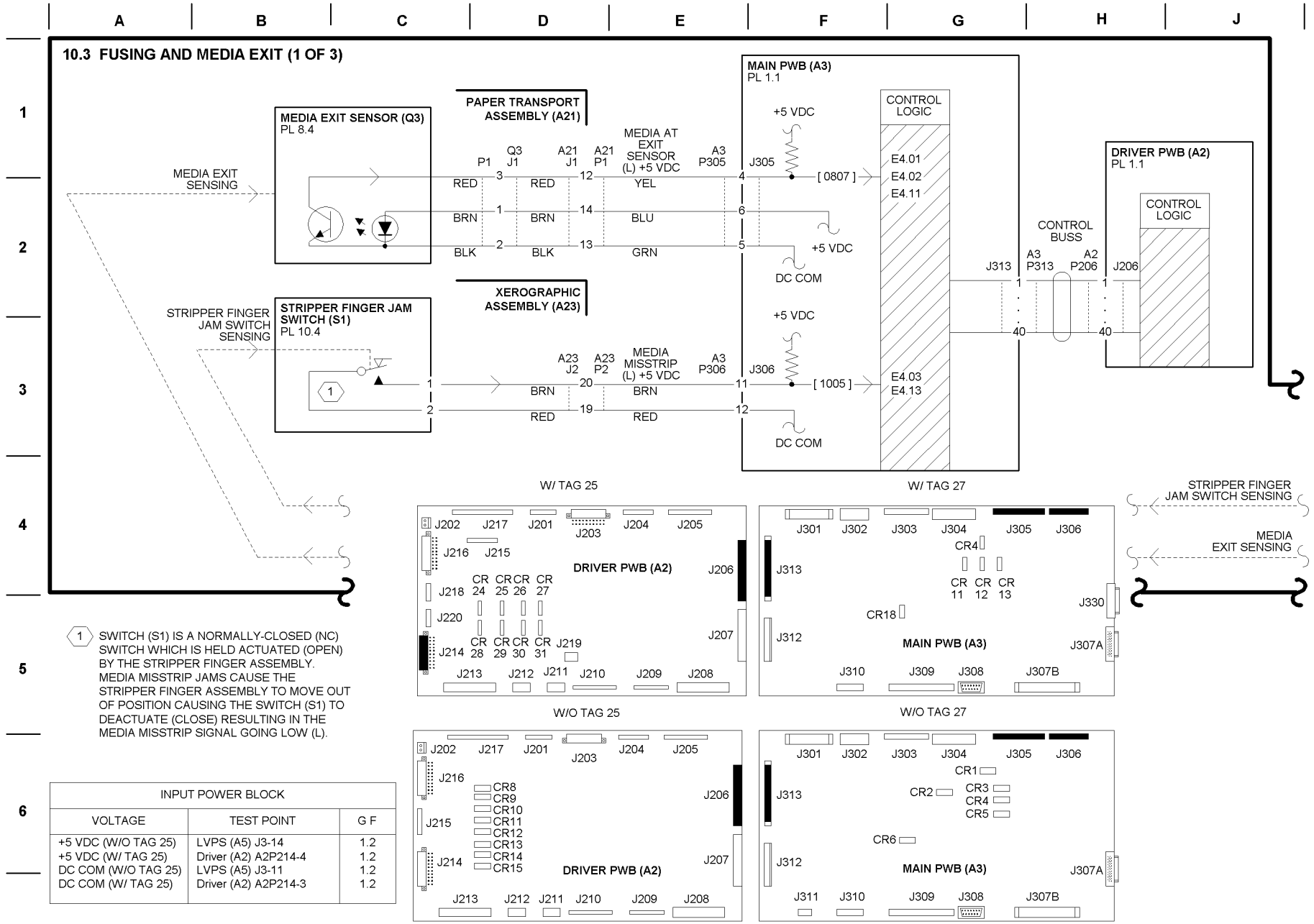


| INPUT POWER BLOCK | | |
|---|---|---|
| VOLTAGE | TEST POINT | G F |
| +5 VDC (W/O TAG 25) | LVPS (A5) J3-14 | 1.2 |
| +5 VDC (W/ TAG 25) | Driver (A2) A2P214-4 | 1.2 |
| DC COM (W/O TAG 25) | LVPS (A5) J3-11 | 1.2 |
| DC COM (W/ TAG 25) | Driver (A2) A2P214-3 | 1.2 |

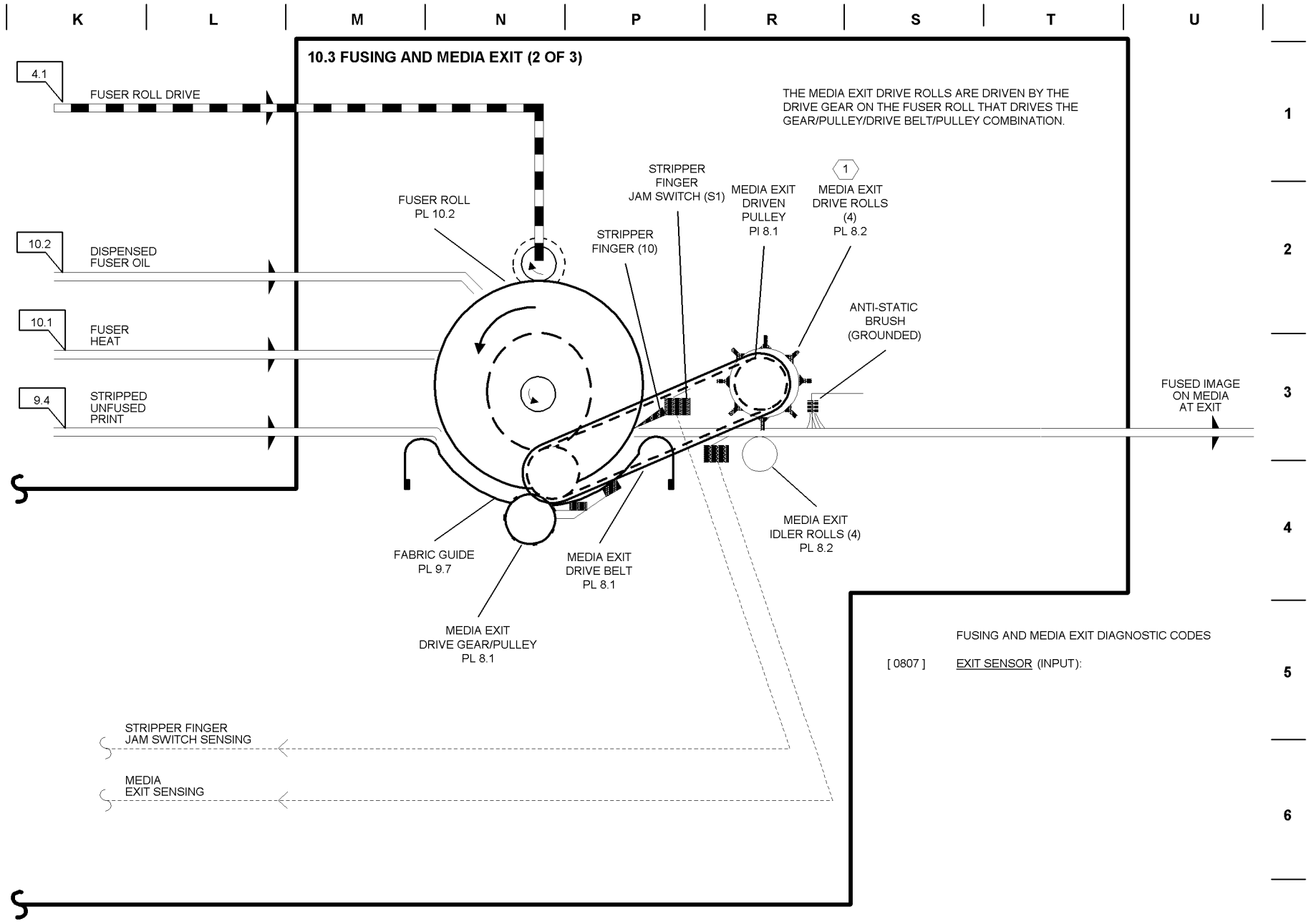
K
L
M
N
P
R
S
T
U
1
2
3
4
5
6
10.3 FUSING AND MEDIA EXIT (2 OF 3)
4.1
FUSER ROLL DRIVE
THE MEDIA EXIT DRIVE ROLLS ARE DRIVEN BY THE DRIVE GEAR ON THE FUSER ROLL THAT DRIVES THE GEAR/PULLEY/DRIVE BELT/PULLEY COMBINATION.
10.2
DISPENSED FUSER OIL
10.1
FUSER HEAT
9.4
STRIPPED UNFUSED PRINT
FUSER ROLL PL 10.2
STRIPPER FINGER JAM SWITCH (S1)
MEDIA EXIT DRIVEN PULLEY PI 8.1
1
MEDIA EXIT DRIVE ROLLS (4) PL 8.2
STRIPPER FINGER (10)
ANTI-STATIC BRUSH (GROUNDED)
FUSED IMAGE ON MEDIA AT EXIT
FABRIC GUIDE PL 9.7
MEDIA EXIT DRIVE BELT PL 8.1
MEDIA EXIT IDLER ROLLS (4) PL 8.2
MEDIA EXIT DRIVE GEAR/PULLEY PL 8.1
FUSING AND MEDIA EXIT DIAGNOSTIC CODES
[ 0807 ] EXIT SENSOR (INPUT):
STRIPPER FINGER JAM SWITCH SENSING
MEDIA EXIT SENSING

## 10.3 FUSING AND MEDIA EXIT (3 OF 3)

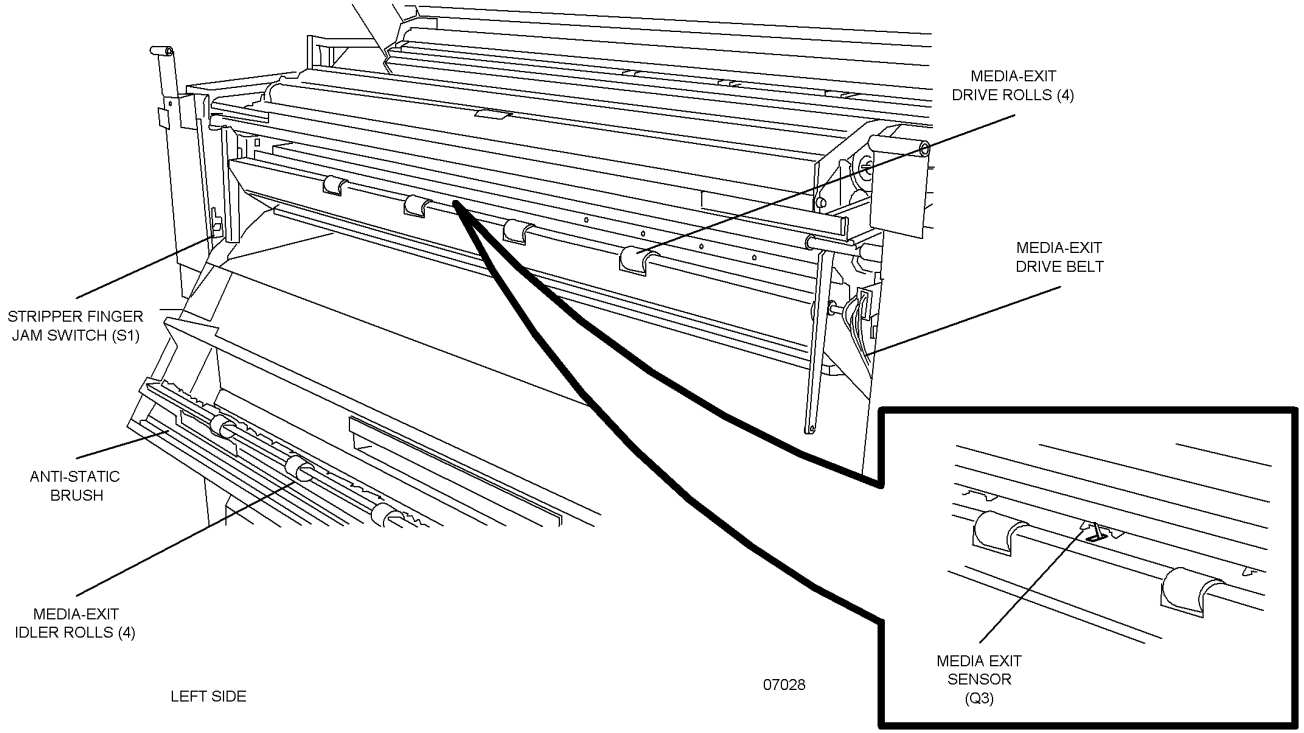

# Plug/Jack List

The following list is provided as an aid in locating plugs and jacks and other components. Refer to the referenced Block Schematic Diagram (BSD) for component location.

**Table 1 Plug/Jack**

| Plug/Jack or Component | Brief Description | BSD |
|---|---|---|
| A1 | AC Module | BSD 1.1A |
| A1FL1 | Noise Filter “Delta” | BSD 1.1A |
| A1FL1 | Noise Filter “Corcom” | BSD 1.1B |
| A1GFP1 | Ground Fault Protector | BSD 1.1A |
| A1K1 | Fuser Power Relay | BSD 10.1 |
| A1K3 | Fuser Ballast Power Relay | BSD 10.1 |
| A1P2/J2 | AC Power Module | BSD 10.1 |
| A1P3/J3 | Controller Power Cord | BSD 1.1A |
| A1Q1 | Fuser Triac | BSD 10.1 |
| A1R1 | Fuser Ballast Resistor | BSD 10.1 |
| A1S1 | Main Power Switch | BSD 1.1A |
| A2P201/J201 | Driver PWB | BSD 7.5 |
| A2P202/J202 | Print Length Meter | BSD 3.1 |
| A2P203/J203 | Driver PWB | BSD 7.5 |
| A2P203/J203 | Cutter Interlock | BSD 7.5 |
| A2P204/J204 | Driver PWB | BSD 1.4 |
| A2P205/J205 | Xerographic HVPS | BSD 9.1 |
| A2P206/J206 | Driver PWB to Main PWB | BSD 3.1 |
| A2P207/J207 | Driver PWB | BSD1.2 |
| A2P208/J208 | Driver PWB | BSD 1.2 |
| A2P209/J209 | Feed/Rewind Clutches | BSD 7.2 |
| A2P210/J210 | Media Drive Motor | BSD 7.1 |
| A2P210/J210 | Transport Drive | BSD 8.1 |
| A2P213/J213 | Driver PWB (Fuser Control) | BSD 10.1 |
| A2P214/J214 | Driver PWB | BSD 1.2 |
| A2P215/J215 | Driver PWB | BSD 4.3 |
| A2P216/J216 | Driver PWB | BSD 1.2 |
| A3P301/J301 | Main PWB | BSD 2.1 |
| A3P303/J303 | Main PWB | BSD 9.7 |
| A3P305/J305 | Main PWB to Media Buckle Sensor | BSD 4.1 |
| A3P306/J306 | Main PWB | BSD 10.1 |
| A3P307A/J307A | Main PWB to Image Bar Assembly | BSD 6.1 |
| A3P307B/J307B | Main PWB to Controller | BSD 3.1 |
| A3P312/J312 | Main PWB | BSD 1.2 |
| A3P313/J313 | Main PWB to Driver PWB | BSD 3.1 |
| A5P1/J1 | LVPS | BSD 1.2 |
| A5P2/J2 | LVPS | BSD 1.2 |

**Table 1 Plug/Jack**

| Plug/Jack or Component | Brief Description | BSD |
|---|---|---|
| A5P3/J3 | LVPS | BSD 1.2 |
| A7P1/J1 | Media Drive Motor PWB | BSD 7.1 |
| A7P2/J2 | Media Drive Motor PWB | BSD 7.1 |
| A8MOT1P1/J1 | Cutter Drive Motor | BSD 7.5 |
| A8Q1P1/J1 | Cutter Home Sensor | BSD 7.5 |
| A20MOT1P1/J1 | Fuser Roll Drive Motor | BSD 4.1 |
| A20MOT2P1/J1 | Developer Drive Motor | BSD 4.2 |
| A20MOT3P1/J1 | Drum Drive Motor | BSD 4.3 |
| A21-GRN | Transfer Current | BSD 9.4 |
| A21-ORN | Detack Current | BSD 9.4 |
| A21CL1P1/J1 | Cut Sheet Roll Drive Clutch | BSD 8.1 |
| A21Q1P1 | Media Registration Sensor | BSD 8.1 |
| A21Q2P1/J1 | Sheet Feed Sensor | BSD 8.1 |
| A21Q5P1/J1 | Media Buckle Sensor | BSD 4.1 |
| A21Q5P2/J2 | Media Buckle Sensor | BSD 4.1 |
| A22MOT1P1/J1 | Cartridge Drive Motor | BSD 9.7 |
| A22P1/J1 | Developer Assembly | BSD 9.7 |
| A22Q1P1/J1 | Toner Sensor | BSD 9.7 |
| A23DS1P1/J1 | Erase Lamps | BSD 9.6 |
| A23F1 | Thermal Fuse | BSD 10.1 |
| A23HR1 | Fuser Heat Rod | BSD 10.1 |
| A23P1/J1 | Fuser Heater | BSD 10.1 |
| A23P5/J5 | Thermistor Pad Assembly | BSD 10.1 |
| A24P1/J1 | Transport Drive | BSD 8.1 |
| A24P2/J2 | Transport Drive | BSD 8.1 |
| A25P1/J1 | Xerographic HVPS | BSD 9.1 |
| A25P2/J2 (CHARGE) | Xerographic HVPS | BSD 9.1 |
| A25P3/J3 (GRID) | Xerographic HVPS | BSD 9.1 |
| A25P5/J5 (TRANSFER) | Xerographics HVPS | BSD 9.8 |
| A25P6/J6 (DETACK) | Xerographics HVPS | BSD 9.8 |
| A29CN2/A30P2 | LED Driver (Data) | BSD 6.1 |
| A29CN3/A30J3 | LED Driver (Data) | BSD 6.2 |
| A29P1/CN1 | LED Drive (Power) | BSD 6.1 |
| A29P4/CN4 | LED Driver (Power) | BSD 6.2 |
| A30J3/A29CN3 | LED Driver (Data) | BSD 6.2 |
| A30P1/J1 | Receiver PWB to Main PWB | BSD 6.1 |
| A30P2/A29CN2 | Receiver PWB to LED Driver PWB | BSD 6.1 |
| A32P1/J1 | User Interface PWB to Main PWB | BSD 2.1 |
| A32P2/J2 | User Interface PWB to 2x40 Display | BSD 2.1 |
| CL1P1/J1 | Roll 1 Feed Clutch | BSD 7.2 |
| CL2P1/J1 | Roll 1 Rewind Clutch | BSD 7.2 |

**Table 1 Plug/Jack**

| Plug/Jack or Component | Brief Description | BSD |
|---|---|---|
| CL3P1/J1 | Roll 2 Feed Clutch | BSD 7.3 |
| CL4P1/J1 | Roll 2 Rewind Clutch | BSD 7.3 |
| CL5P1/J1 | Roll 3 Feed Clutch | BSD 7.4 |
| CL6P1/J1 | Roll 3 Rewind Clutch | BSD 7.4 |
| MOT1-3 and -4 | Cooling Fan Motor | BSD 1.4 |
| MOT2-1 and -2 | Cooling Fan Motor | BSD 1.4 |
| Q1P1/J1 | Roll 1 Position Sensor | BSD 7.2 |
| Q2P1/J1 | Roll 2 Position Sensor | BSD 7.3 |
| Q3P1/J1 | Roll 3 Position Sensor | BSD 7.4 |
| Q4P1/J1 | Roll 1 Motion Sensor | BSD 7.2 |
| Q5P1/J1 | Roll 2 Motion Sensor | BSD 7.3 |
| Q6P1/J1 | Roll 3 Motion Sensor | BSD 7.4 |
| S1 | Cutter Cover Interlock Switch | BSD 1.3 |
| S1 | Drawer 1 Reed Switch | BSD 7.1 |
| S2 | Drawer 2 Reed Switch | BSD 7.1 |
| S3 | Drawer 3 Reed Switch | BSD 7.1 |
| S21 | Front Door Interlock Switch | BSD 1.3 |
| S26 | Top Cover Interlock Switch | BSD 1.3 |
| S29 | Feed Shelf Interlock Switch | BSD 1.2 |