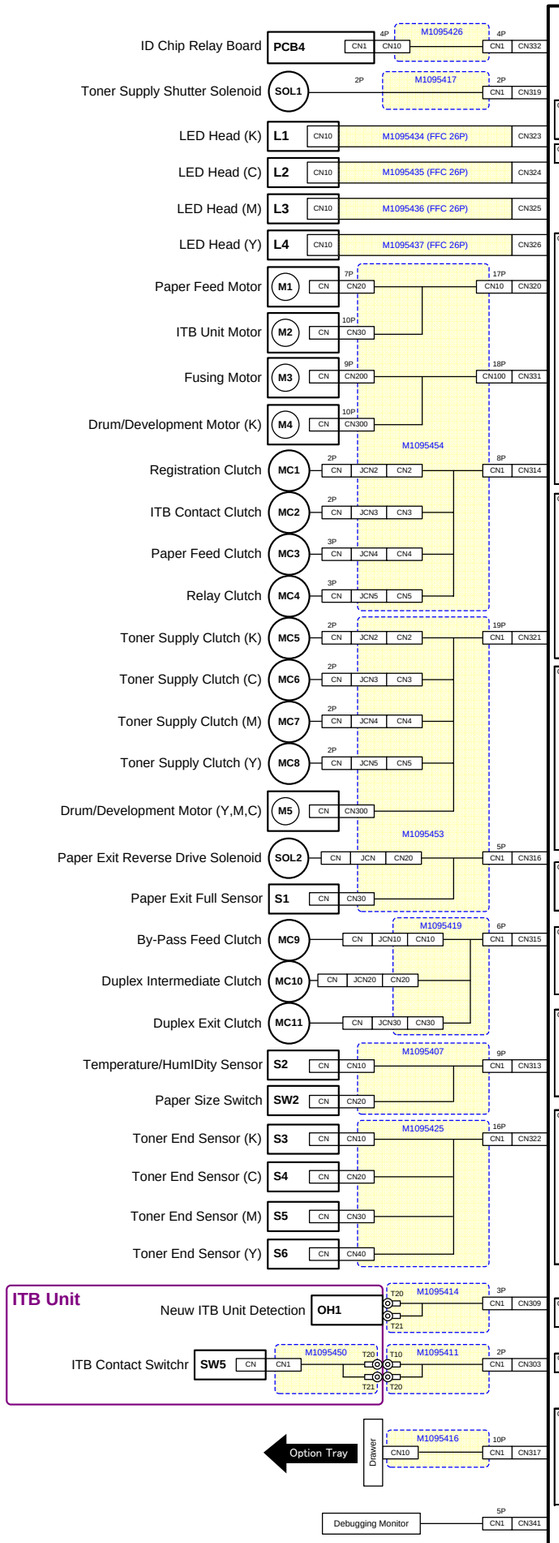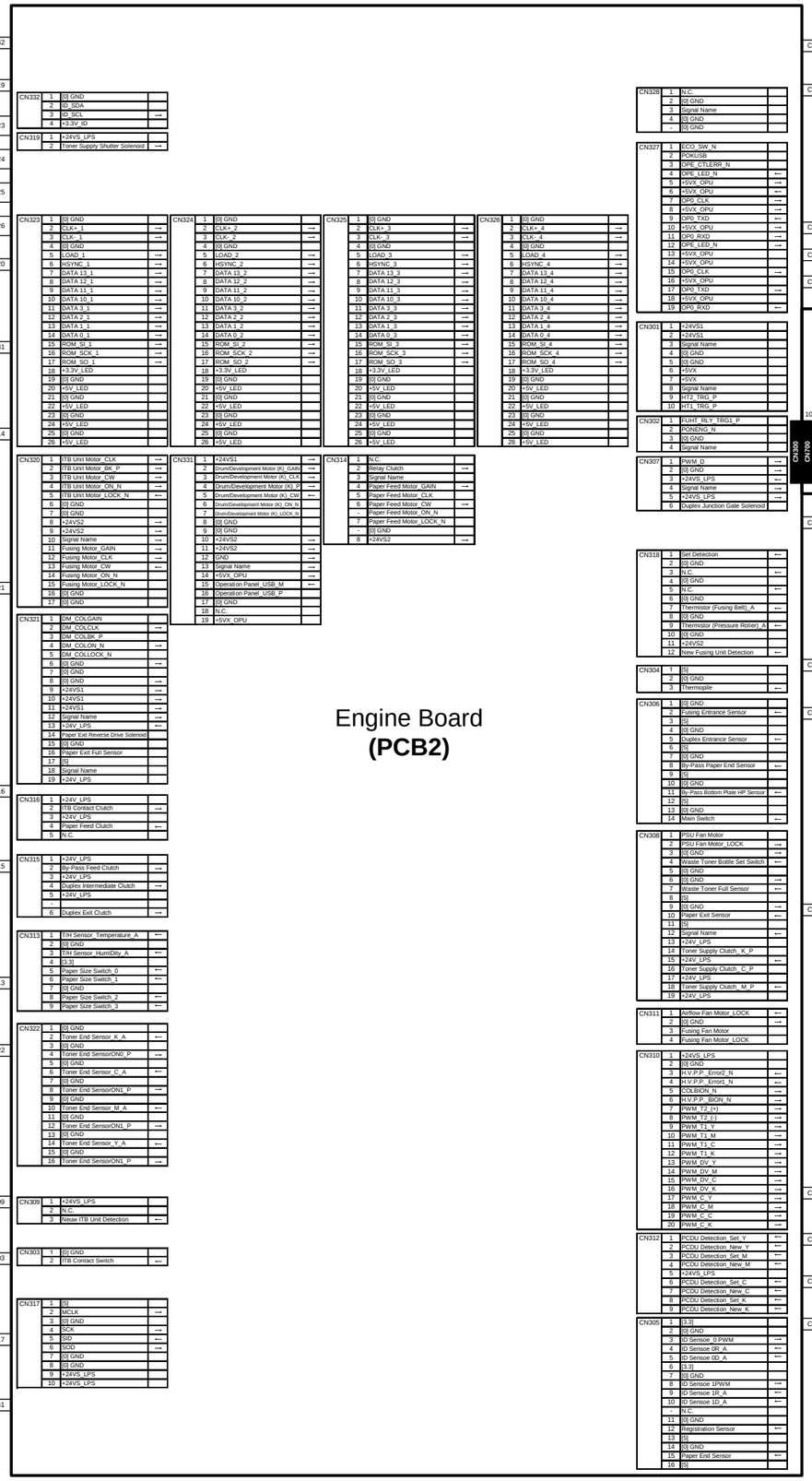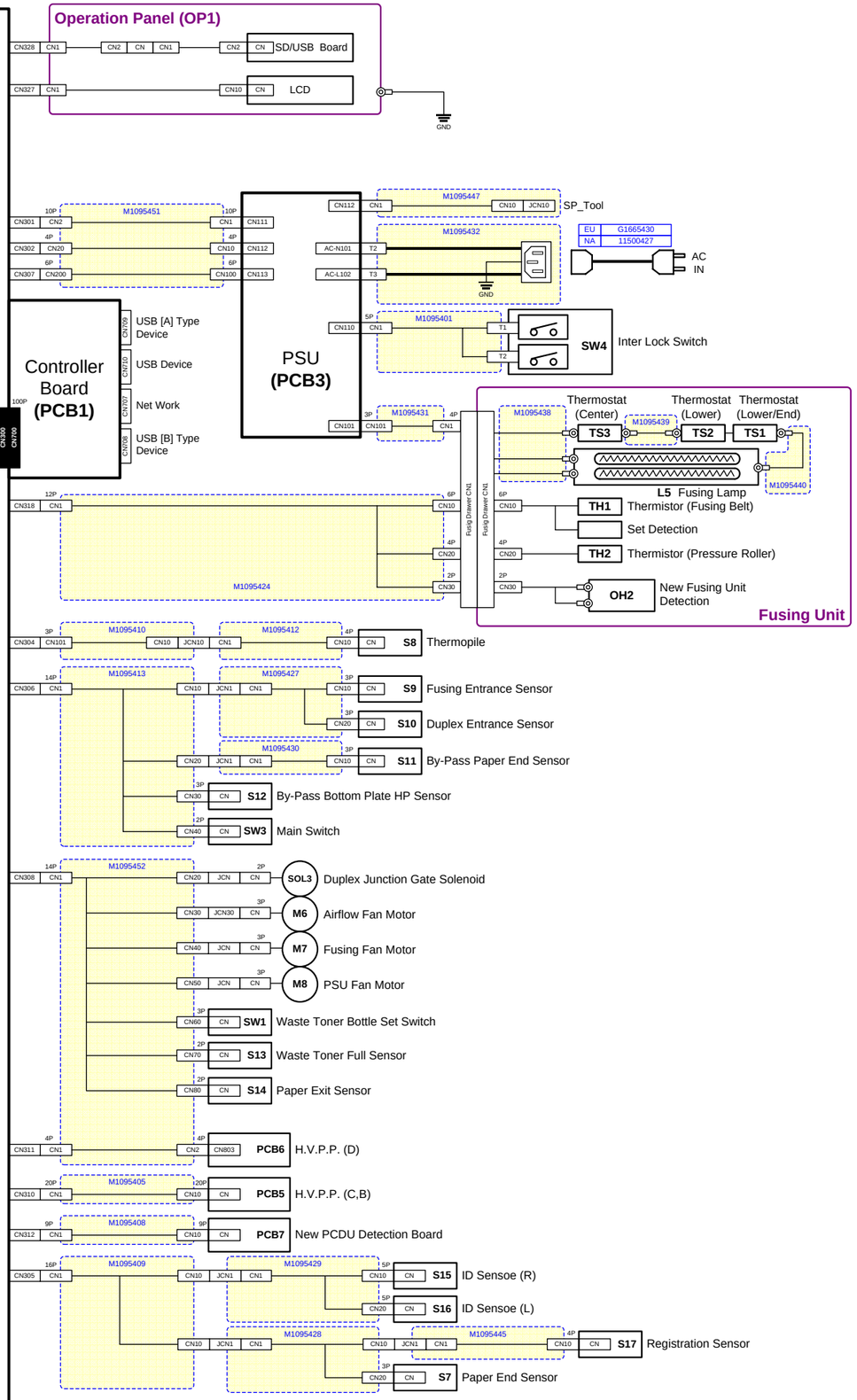M109 POINT TO POINT DIAGRAM