DR-3020

SERVICE MANUAL

REVISION 0

Canon

FEB. 1996

MY8-1388-000

COPYRIGHT © 1996 CANON INC.
CANON DR-3020 REV.0 FEB. 1996 PRINTED IN JAPAN (IMPRIME AU JAPON)

COPYRIGHT © 1998 CANON ELECTRONICS INC.

Printed in Japan
Impreimé au Japon

Use of this manual should be strictly supervised to avoid disclosure of confidential information.

This Service Manual contains necessary basic information for after-sales service and maintenance of DR-3020.

Contents

Chapter 1: General description
Broad features, specifications, name of each unit, and operation

Chapter 2: Basic description
Outline on principle of image processing

Chapter 3: Outline of operation
Description of the principle of operation of the electrical and mechanical systems, their functions, and timing of operations

Chapter 4: Mechanical System
Description of the mechanical system, its disassembly, assembly, and adjustment

Chapter 5: Installation
Location and installation procedure

Chapter 6: Maintenance and servicing
Parts requiring periodic replacement, consumable parts, and periodic servicing

Chapter 7: Troubleshooting
Troubleshooting and service modes

Appendix: General circuit diagram
Information in this manual is subject to change. Notification of such changes will be given in Service Information Bulletins.

The information contained in the Service manual, and the Service Information Bulletins is essential to proper maintenance of the canofile.

Quality Assurance Center
Canon Electronics Inc.

COPYRIGHT © 1996 CANON INC. CANON DR-3020 REV.0 FEB. 1996 PRINTED IN JAPAN (IMPRIME AU JAPON)

CONTENTS

CHAPTER 1 GENERAL DESCRIPTION

I. FEATURES 1-1
II. SPECIFICATIONS 1-2
A. Main body 1-2
B. Paper feed assembly 1-2
C. Scanner 1-2
D. Delivery assembly 1-2
E. Image processing section 1-3
F. Others 1-3
III. PARTS OF THE DR-3020 1-4
A. Appearance 1-4
B. Sectional view 1-5
IV. DESCRIPTION OF OPERATION 1-7
A. Basic Operation 1-7
B. Setting the document 1-7
V. PAPER JAM ALARM 1-9
VI. REGULAR INSPECTION BY USERS 1-11
A. Cleaning 1-11

CHAPTER 2 BASIC DESCRIPTION

I. OUTLINE 2-1
II. IMAGE PROCESSING 2-5
III. IMAGE ENCODING 2-23

CHAPTER 3 OUTLINE OF OPERATION

I. SYSTEM CONFIGURATION 3-1
II. EXPOSURE SYSTEM 3-2
A. Scanner 3-2
III. BASIC OPERATION 3-4
A. Functions 3-4
B. Main Drive 3-5
C. Power ON Sequence 3-6
D. Timing Chart 3-7
IV. OUTLINE OF ELECTRICAL CIRCUITS 3-8
V. INPUT TO AND OUTPUT FROM MAIN PCB ASSEMBLIES 3-10
VI. DOCUMENT PICK-UP ASSEMBLY 3-12
A. Outline 3-12
B. Automatic Adjust/Separation Assembly 3-13
C. Detection of Faulty Document Feed 3-19
VII. HARDWARE CONFIGURATION 3-23
VIII. FLOW OF IMAGE DATA 3-27
A. Outline 3-27
B. Flow of Image Data 3-31
C. DMA 3-33
IX. DESCRIPTION OF ELECTRICAL CIRCUITS 3-34
A. Outline 3-34
B. CPU Circuit 3-37
C. BASIS Drive Circuit 3-41
D. Multivalue Image Processing Control (BASIS-CHIP) Circuit 3-44
E. Image Binarizing Controller (NOAH CHIP) Circuit 3-46
F. Binary Image Processing Controller (IF III-CHIP) Circuit 3-48
G. Encoded Image Data Transmission Controller (SORAMAME-CHIP) Circuit 3-50
H. Main Motor Driver Circuit 3-52
X. INTERFACE 3-53
A. Outline 3-53
B. SCSI Interface 3-57
XI. POWER SUPPLY 3-65
A. Outline 3-65
B. Power Supply Circuit Protection Function 3-65
XII. LAYOUT OF ELECTRICAL COMPONENTS 3-67
A. Sensors 3-67
B. Switches/LEDs 3-68
C. Clutches/Solenoids/Motors 3-69
D. PCBs 3-70

COPYRIGHT © 1996 CANON INC. CANON DR-3020 REV.0 FEB. 1996 PRINTED IN JAPAN (IMPRIME AU JAPON)

XIII. REFERENCE LIST OF VARIABLE RESISTORS (VR), LEDS, AND CHECK PINS FOR EACH PCB 3-71
A. CPU PCB Assembly 3-71
B. Connector PCB Assembly..... 3-73
C. Pick-up Sensor PCB Assembly.. 3-73
D. BASIS Drive PCB Assembly..... 3-73
XV. LAYOUT OF MAJOR PCB DEVICES 3-74
A. CPU PCB Assembly 3-74

CHAPTER 4 MECHANICAL SYSTEM

I. EXTERNAL CONTROL..... 4-1
A. Outside Cover 4-1
B. Delivery Assembly Release Switch 4-8
II. DRIVE..... 4-10
A. Main Motor..... 4-10
B. Document Board Drive Motor..... 4-11
C. Adjusting the Belt Tension..... 4-13
III. DELIVERY..... 4-14
A. Pick-up Control Assembly..... 4-14
IV. EXPOSURE..... 4-22
A. Scanner Unit..... 4-22
V. ELECTRICAL 4-26
A. PCBs..... 4-26

CHAPTER 5 INSTALLATION

I. INSTALLATION SUGGESTIONS..... 5-1
II. UNPACKING AND INSTALLATION ... 5-2

CHAPTER 6 MAINTENANCE AND SERVICING

I. PARTS TO BE REPLACED PERIODICALLY 6-1
II. CONSUMABLE PARTS 6-1

CHAPTER 7 TROUBLESHOOTING

I. IMAGE ARE NOT OUTPUT..... 7-1
II. TROUBLESHOOTING..... 7-4
III. SERVICE MODE 7-8
VI. PROCESS FOR REPLACING ELECTRICAL PARTS 7-19

APPENDIX

I. LIST OF SIGNALS AND COMMANDS A-1
II. GENERAL TIMING CHART A-3
III. GENERAL CIRCUIT DIAGRAM..... A-5
IV. CONNECTOR CIRCUIT DIAGRAM.... A-7
V. BASIS DRIVE CIRCUIT DIAGRAM ... A-9
VI. SCANNING START SENSOR CIRCUIT DIAGRAM A-11
VII. LIST OF SPECIAL TOOLS..... A-12
VIII. SOLVENT/OIL TABLE A-13

COPYRIGHT © 1996 CANON INC. CANON DR-3020 REV.0 FEB. 1996 PRINTED IN JAPAN (IMPRIME AU JAPON)

CHAPTER 1

GENERAL DESCRIPTION

I. FEATURES 1-1
II. SPECIFICATIONS 1-2
III. PARTS OF THE DR-3020 1-4
IV. DESCRIPTION OF OPERATION 1-7
V. PAPER JAM ALARM 1-9
VI. REGULAR INSPECTION BY USERS 1-11

COPYRIGHT © 1996 CANON INC. CANON DR-3020 REV.0 FEB. 1996 PRINTED IN JAPAN (IMPRIME AU JAPON)

I. FEATURES

1. High speed input

A4 size documents: approx. 40 sheets/minute (300 dpi X 150 lpi: single side)

2. Simultaneous front/back recording capability

For simultaneous front/back scanning of document, for instance a check, it is possible only by setting the document once.

3. Automatic separation adjustment function

Documents can be picked up one by one by the automatic paper thickness adjustment/separation mechanism.

Windows is a registered trade mark of Microsoft in the U.S. and other countries.

COPYRIGHT © 1996 CANON INC. CANON DR-3020 REV.0 FEB. 1996 PRINTED IN JAPAN (IMPRIME AU JAPON)

II. SPECIFICATIONS

A. Main body

Model
Main body : Desk top

B. Paper feed assembly

Method
Paper feed : • Automatic paper feed by auto-feeder
• Manual feed (sheet by sheet)
Feed direction : A4R direction
Function
Document size :
• Auto-feed
Width : 55 mm - 257 mm
Length : 70 mm - 364 mm
Thickness : 0.06 mm - 0.15 mm
• Manual feed
Width : 55 mm - 257 mm
Length : 70 mm - 364 mm
Thickness : 0.05 mm - 0.20 mm
Read Area
Width : 254 mm
Length : 364 mm
Document requirements
- The back carbon paper cannot be used.
- Pressure sensitive paper cannot be used.
- Those with perforations for binding can be used (round perforations only).

Separation adjustment : Automatic separation
Paper storage : Height 10 mm (approx. 100 sheets of 80 g/m^2)
Feed speed : High speed 241.9 mm/sec (300 dpi in horizontal scanning/ 150 lpi in vertical scanning)
Medium speed 181.4 mm/sec (200 dpi in horizontal scanning/ 200 lpi in vertical scanning)
Low speed 121.0 mm/sec (300 dpi in horizontal scanning/ 300 lpi in vertical scanning)

C. Scanner

Method
Scanning : Movement of document
Image scanning : Photosensitive device (BASIS)
Light source : LED array (yellow green, peak emission wave length: 570 nm)
Function
Scan resolution : 300 dpi/200 dpi in horizontal scanning
300 lpi/200 lpi/150 lpi in vertical scanning
Slice level : Changeable
Scanner mode : Binary in character mode
Error dispersion in photograph mode

D. Delivery assembly

Method
Delivery : Face down
Function
Tray : Movable tray
Tray storage : Approx. 100 sheets of 80 g/m^2

COPYRIGHT © 1996 CANON INC.
CANON DR-3020 REV.0 FEB. 1996 PRINTED IN JAPAN (IMPRIME AU JAPON)

E. Image processing section

Image processing : • γ compensation
• Edge emphasis
• Compensation for shading
• Dust picture element erase
• Error diffusion
• Decode

Decoding image: • MH
• MR
• MMR
• Not decoded

F. Others

Interface : SCSI
Electricals : 100 V 50/60 Hz
120 V 50/60 Hz
220 - 240 V 50/60 Hz
Max. power consumption : 65 W
Dimensions : With pick-up/delivery tray closed
362 mm wide
336 mm deep
196 mm high
With pick-up/delivery tray open
362 mm wide
596 mm deep
196 mm high
Weight : Approx. 10 kg (22.0 lb)

Environment
Temperature: 10 - 32.5°C(50 - 90.5°F)
Humidity : 20 - 80%RH

These specifications are subject to change without notice for improvement of the machine.

COPYRIGHT © 1996 CANON INC.

III. PARTS OF THE DR-3020

A. Appearance

1. Front view

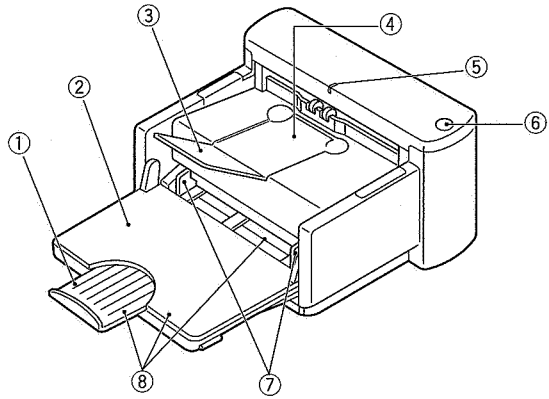

① Pick-up tray guide
② Pick-up tray
③ Document delivery tray guide
④ Document delivery tray
⑤ Power indicator
⑥ Power switch
⑦ Document guide
⑧ Document board

Figure 1-1

2 Rear view

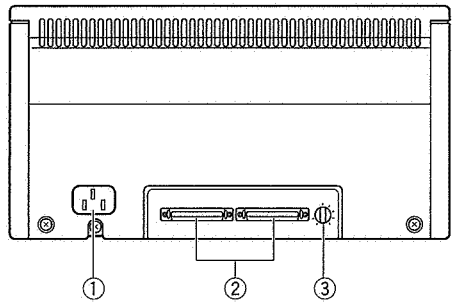

① Inlet
② SCSI interface connectors
③ SCSI ID switch

Figure 1-2

COPYRIGHT © 1996 CANON INC. CANON DR-3020 REV.0 FEB. 1996 PRINTED IN JAPAN (IMPRIME AU JAPON)

B. Sectional view

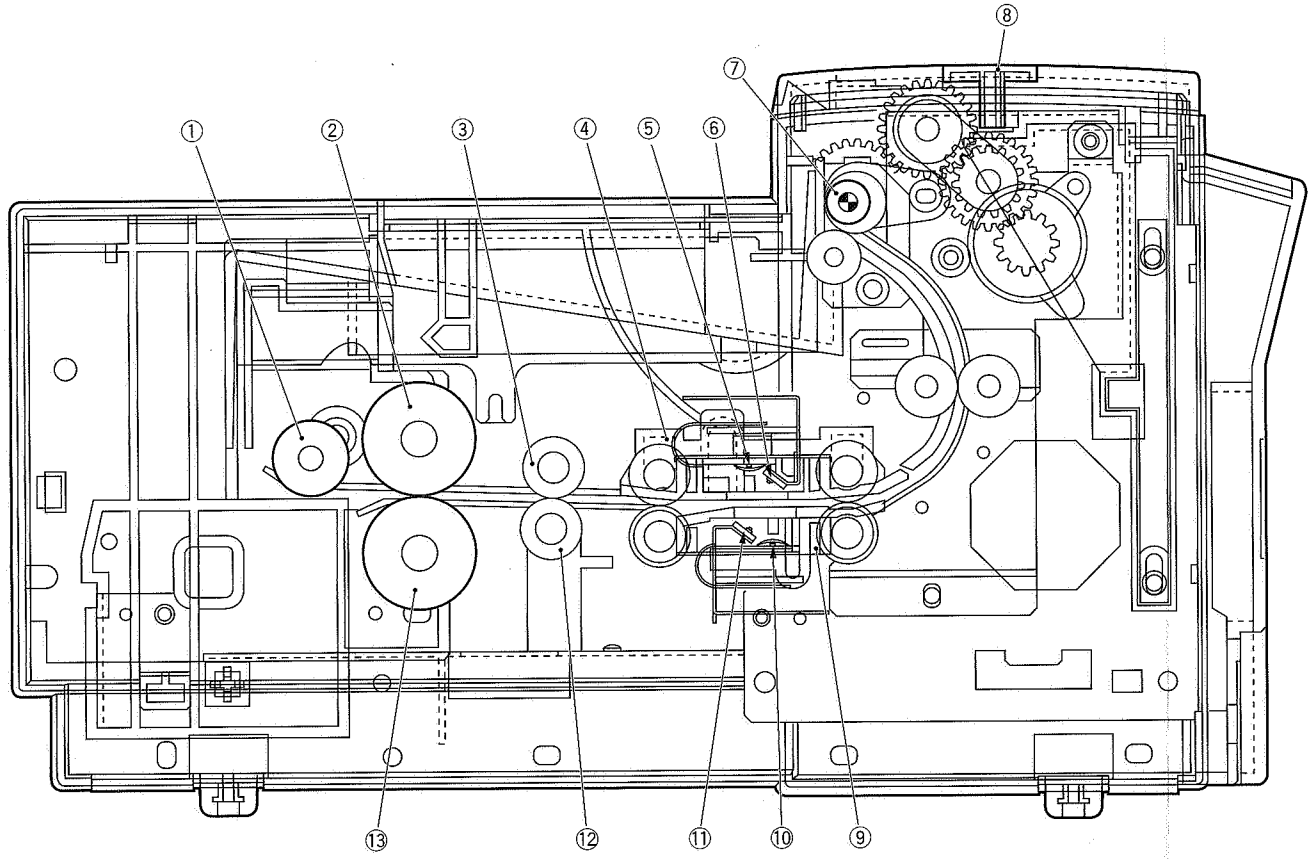

① Pick-up roller
② Feed roller
③ Registration roller
④ Front scanner unit
⑤ Front BASIS
⑥ Front LED array
⑦ Delivery roller
⑧ Power switch
⑨ Back scanner unit
⑩ Back BASIS
⑪ Back LED array
⑫ Registration roller
⑬ Separation roller

Figure 1-3

COPYRIGHT © 1996 CANON INC.

CANON DR-3020 REV.0 FEB. 1996 PRINTED IN JAPAN (IMPRIME AU JAPON)

IV. DESCRIPTION OF OPERATION

A. Basic Operation

The following are the basic operation of this machine.

1. Turn the power to the peripheral devices (including this machine) on.
2. Turn the power to the personal computer on.
3. Open the pick-up tray.
4. Open the delivery tray.
5. Initiate the application software.
6. Place a document onto the pick-up tray.
7. Execute the operations.
   Execute all the necessary operations in accordance with the operation sequence.
8. End of operation
9. End of application software
10. Turn the power to the personal computer off.
11. Turn the power to the peripheral devices (including this machine) off.

B. Setting the document

a. Open the pick-up tray.

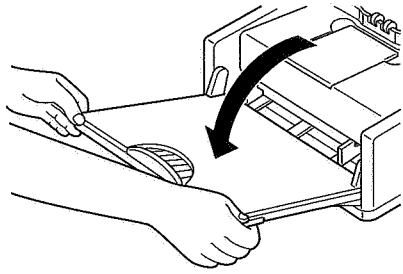

Figure 1-4

b. Pull the pick-up tray guide out.

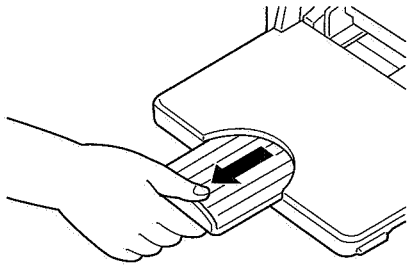

Figure 1-5

c. Open the delivery tray guide.

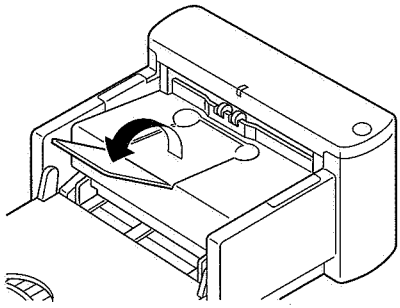

Figure 1-6

COPYRIGHT © 1996 CANON INC.

d. Set the document guide according to the width of the document.

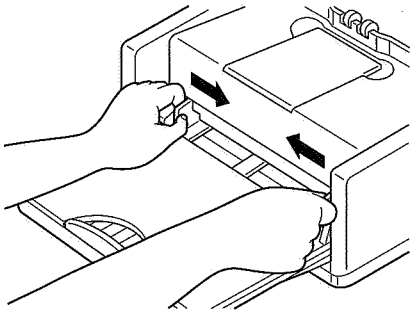

Figure 1-7

e. Set the document onto the pick-up tray.

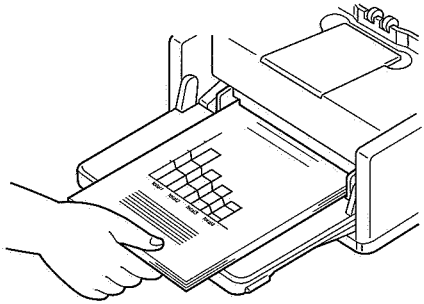

Figure 1-8

f. Set the document guide for the document again.

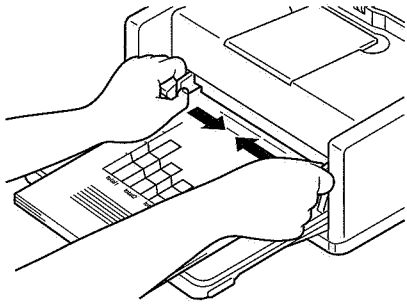

Figure 1-9

COPYRIGHT © 1996 CANON INC.

V. PAPER JAM ALARM

If the documents jam in the machine during document scanning, take corrective action in accordance with the following procedure.

a. Remove the documents on the delivery tray, and remove the delivery auxiliary guide, if mounted.

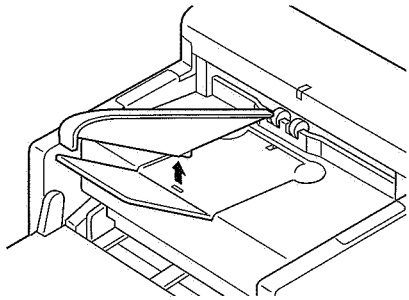

Figure 1-10

b. Close the delivery tray guide.

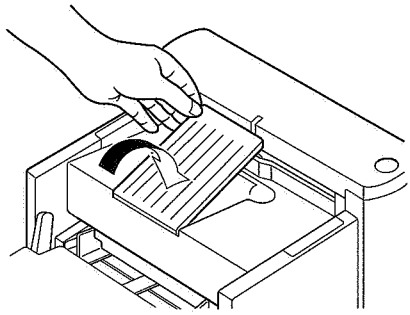

Figure 1-11

c. Open the delivery assembly.

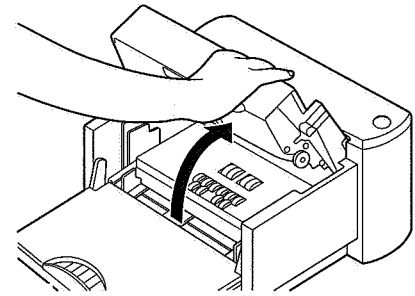

Figure 1-12

d. Remove the jammed document.

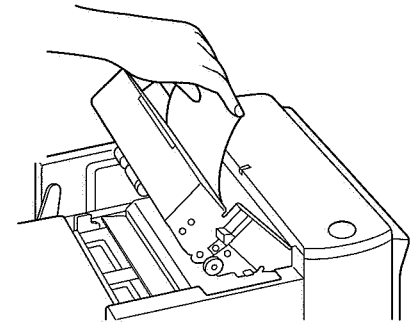

Figure 1-13

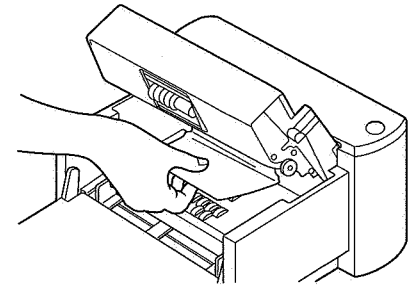

Figure 1-14

COPYRIGHT © 1996 CANON INC.

e. Close the delivery assembly.

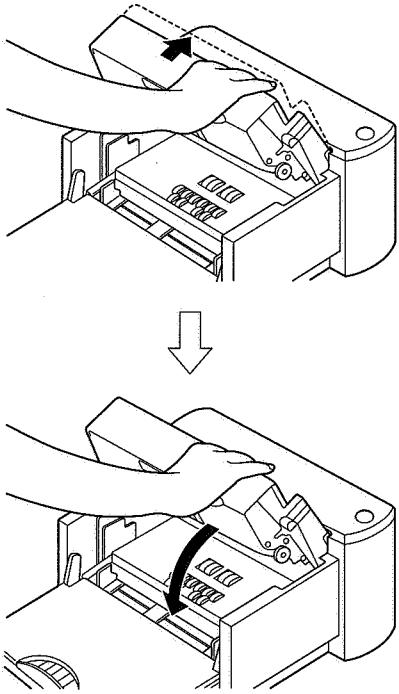

Figure 1-15

COPYRIGHT © 1996 CANON INC.

VI. REGULAR INSPECTION BY USERS

A. Cleaning

Instruct the user clearly to clean the following items at least once a week.

1. Document feeder assembly
   - Read glass
     Wipe the read glass with a clean soft cloth.
   - Pick-up roller
     Wipe the pick-up roller with a wet cloth before dry-wiping.
   - Registration roller
     Wipe the registration roller with a wet cloth before dry-wiping.
   - Feed roller
     Wipe the feed roller with a wet cloth before dry-wiping.
   - Separation roller
     Wipe the separation roller with a wet cloth before dry-wiping.

Note: Clean each roller, rotating it in the feed direction.

COPYRIGHT © 1996 CANON INC.

CHAPTER 2

BASIC DESCRIPTION

I. OUTLINE 2-1
II. IMAGE PROCESSING 2-5
III. IMAGE ENCODING 2-23

COPYRIGHT © 1996 CANON INC. CANON DR-3020 REV.0 FEB. 1996 PRINTED IN JAPAN (IMPRIME AU JAPON)

I. OUTLINE

1. Outline

Figure 2-1 shows the main component parts of the scanner assembly.

The front and back of a document are illuminated by two, upper and lower, LED arrays. The reflected light is detected by a photosensitive device and converted into electrical signals. (This process is called photo-electric conversion.)

During this process, the image of the document is broken down into picture elements by the photosensitive device, and the electrical signals, which correspond to the density of each picture element, are processed in the image processor, and then sent to the Personal Computer.

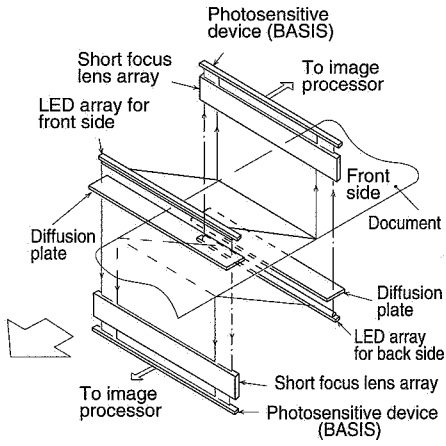

Figure 2-1

2. Photo-electric Conversion

The process of converting light into electricity, which is shown in Figure. 2-1, is called photo-electric conversion, and the device used for photo-electric conversion is called a "photo-electric conversion device".

The photo-electric conversion device used in this machine is a BASIS (Base Stored Image Sensor).

3. BASIS

A BASIS is a single chip photo-electric conversion device which consists of several thousand photosensitive elements of several tens of microns square arranged in a row, combined with a circuit which provides the scanning function.

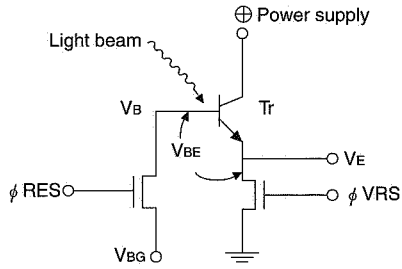

Figure 2-2

Figure 2-2 shows the equivalent circuit of BASIS consisting of one photosensitive device (single picture element).

Figure 2-3 shows the timing of BASIS and Figure 2-4, the internal operation of BASIS.

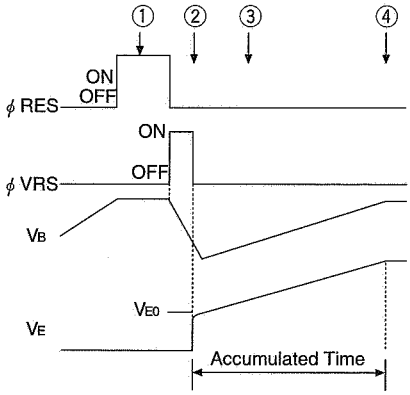

Figure 2-3

Reset signal (H) is input in ø RES terminal and V_B terminal is made the same potential as V_{BG}. ①

After making ø RES terminal "L" øVRS terminal is made "H" and V_E is reset.

At this point, if light is irradiated on i layer shown in Figure 2-4, i layer will act to transmit the light. Therefore, the p layer electrons are sent to n1 layer and flow to the ⊕ power supply. And, the base voltage V_B gradually becomes higher. ②

When n2 (emitter) electrons move to p layer, the emitter voltage V_E is $V_E=V_B-V_{BE}$ and is accumulated in the base capacity. ③

Then when the maximum value of all bits of the line sensor reaches a certain level, accumulation is ended. Voltage to the amount of light irradiation becomes $V_E=V_{EO}$.

As described in the foregoing, the scanning of the accumulated image data is scanned successively after being amplified for each bit.

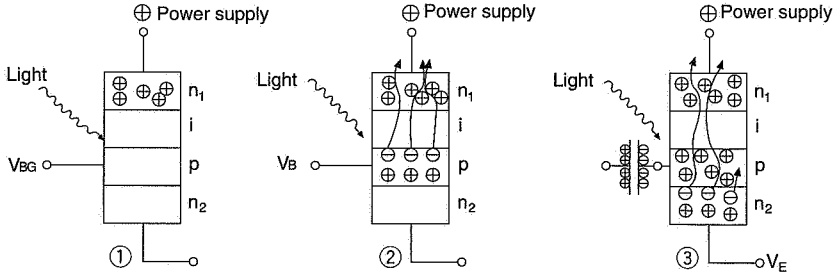

Figure 2-4

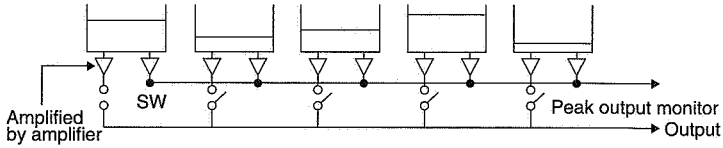

Figure 2-5

COPYRIGHT © 1996 CANON INC.
CANON DR-3020 REV.0 FEB. 1996 PRINTED IN JAPAN (IMPRIME AU JAPON)

The switch (SW) in Figure 2-5 is equivalent to the shutter of a camera. Opening and closing speed of the switch (equivalent to the shutter speed of a camera) determines the vertical scanning line density.

Normally, the opening and closing speed of the switch (SW) is electrically controlled in such a way that the vertical scanning line density is the same as the horizontal scanning line density (determined by the size of the photosensitive elements).

In this way, the image of the document is broken up into picture elements of several tens of microns square.

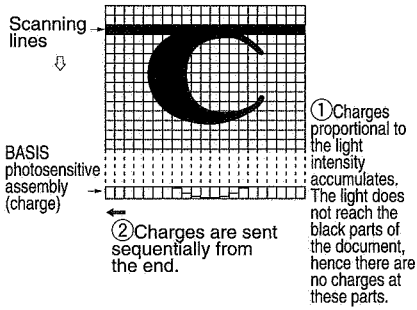

Figure 2-6

4. Picture Elements

During an actual scanning operation, a single scanning line is sub-divided into finer elements.

These elements constitute the building blocks of the image, hence are called 'picture elements' (also 'pixels' or 'pels').

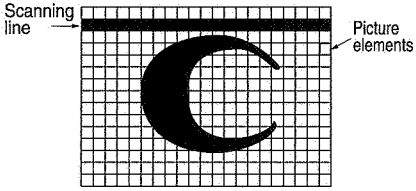

Figure 2-7

COPYRIGHT © 1996 CANON INC.

Each square shown in Figure 2-7 is called a picture element.

The smaller a picture element is, the more faithful the reproduction of the image of the document will be.

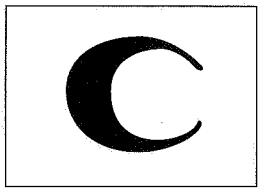

Document

Figure 2-8

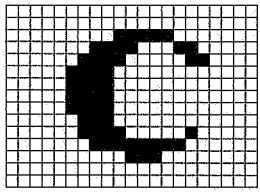

For larger picture element

Figure 2-9

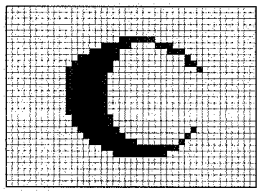

For smaller picture element

Figure 2-10

From the foregoing, it can be seen that the smaller the picture elements are, the better the resolution is.

Resolution is expressed in scanning line density. The unit of resolution is dots/25.4 mm or raster lines/25.4 mm.

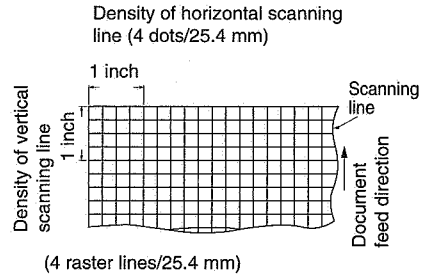

Figure 2-11

Scanning line density
- Horizontal scanning line density:
  This is the number of picture elements per inch along a scanning line in the horizontal scanning direction. (Unit: dpi)
- Vertical scanning line density:
  This is the number of picture elements per inch in the vertical scanning direction. (Unit: lpi)

COPYRIGHT © 1996 CANON INC. CANON DR-3020 REV.0 FEB. 1996 PRINTED IN JAPAN (IMPRIME AU JAPON)

II. IMAGE PROCESSING

1. Image Processing Section

Figure 2-12 shows a block diagram of the main functions of the image processing section.

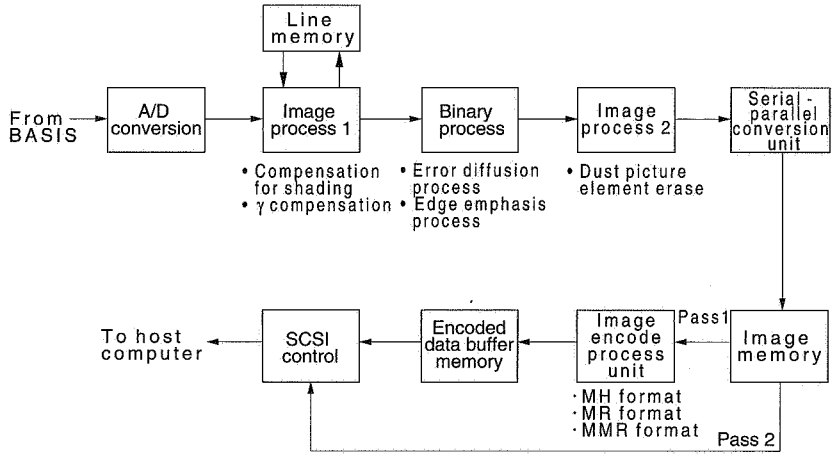

Figure 2-12

Image scanning (input)

Electrical signals (analog) proportional to the density of each picture element are sent one after another from the BASIS to the A/D converter where they are converted to digital signals (6-bit) of a level corresponding to the density.

Next, the following multi-value image processing takes place in image processing section 1.

• Compensation for shading

Compensation is made for random variations in the light distribution of the LED array and also random variations in the sensitivity of each element of the BASIS.

• γ compensation

Compensate the gradation to the document.

After digital signals are processed with image processing section 1, they are binary-processed (density processed) as well as edge-emphasized.

The slice level (density adjustment) for this binary process can be varied from the outside.

After data is processed with image processing section 1, it is binary-processed and image-processed.

• Edge Emphasis Process

This process is to emphasize the edge of the image when converting the image signals to digital signals in order to suppress a loss of fine details of the image.

COPYRIGHT © 1996 CANON INC.

• Error Diffusion Process

This provides reproducibility of photograph documents and other half tones.

Binarized image signals are sent to image processing section 2.

At image processing section 2, dust picture element erasing process can be selected.

Dust image element erasing is the process of erasing unwanted fine dots on the document for rasing the image encoding rate in the picture encoding (codifying) process of the next stage, the image encoding rate is raised.

The image signals processed as above are temporarily stored in the image memory.

When the image is not required to be encoded, the data is sent to the SCSI controller via pass 2.

However, when picture encoding is necessary, the image is encoded by either the MH, MR, or MMR method mode at the image encoding processor.

The encoded image data, after being stored in the encoded data buffer memory, are sent, via the SCSI controller, to the personal computer.

COPYRIGHT © 1996 CANON INC.
CANON DR-3020 REV.0 FEB. 1996 PRINTED IN JAPAN (IMPRIME AU JAPON)

2. A/D Conversion

As mentioned previously, the signals sent from the BASIS are analog signals, hence they are converted into digital signals (to enable them to be processed by a microprocessor).

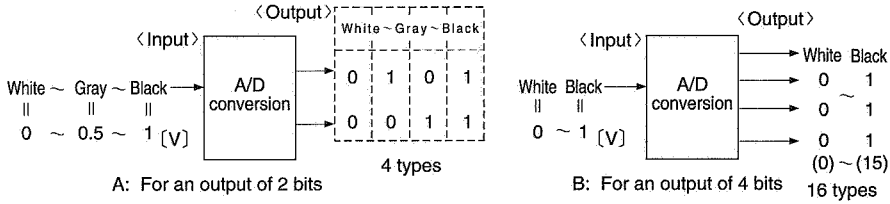

Figure 2-13

Figure 2-13 shows a comparison between the case where the digital signal output after A/D conversion are 2-bit signals, and the case where they are 4-bit signals. (The input voltages shown differ from the actual values).

If it were only necessary to judge whether the image density of the document was black or white, the output need only be one bit. In actual fact, however, it is necessary to reproduce halftones such as gray.

If the output is two bits, it is possible to output four values "00," "01," "10," and "11." Consequently, the input signal (analog) which changes from 0 [V] to 1 [V] as the image of the document changes progressively through white, gray, and black, is converted to a digital signal of one of the above four levels corresponding to the particular analog level.

If the output is four bits, a total of 16 values can be obtained.

In other words, as the number of output bits increases, the resulting digital signal represents the changes in density of the document image more faithfully (good tonality).

This machine uses 6-bit signals which can represent a total of 64 tonal gradations.

COPYRIGHT © 1996 CANON INC.

3. Compensation for Shading

The BASIS output corresponding to each picture element is not necessarily a uniform value, even if all the light reflected on a document of uniform density in the scanning line direction is detected. The reasons for this are as follows:

Reasons: 1. The light intensity of each LED array is different.
2. The sensitivity of each photosensitive element of the BASIS (several thousand) is different.

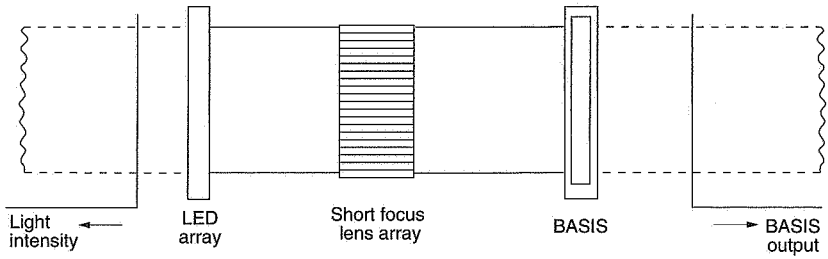

Figure 2-14

Compensation for the above-mentioned variations in the output of the BASIS is called "compensation for shading".

In other words, when light reflected on a document of uniform density is detected, the output of each BASIS differs, hence compensation is applied by multiplying each BASIS (corresponding to each picture element) so that all the outputs are equal.

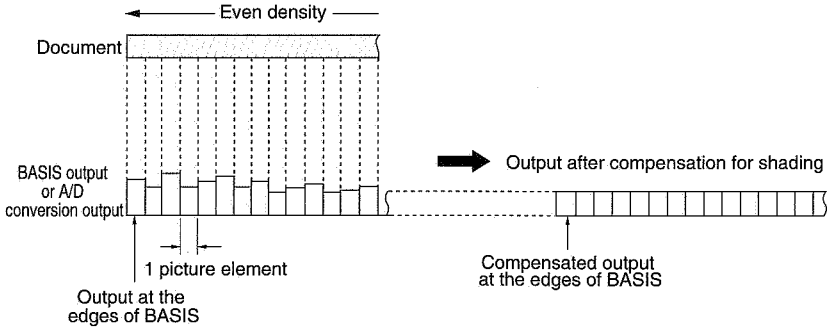

Figure 2-15

COPYRIGHT © 1996 CANON INC.

For instance, when the image changes from white to black, the individual output of BASIS becomes as shown in Figure 2-16.

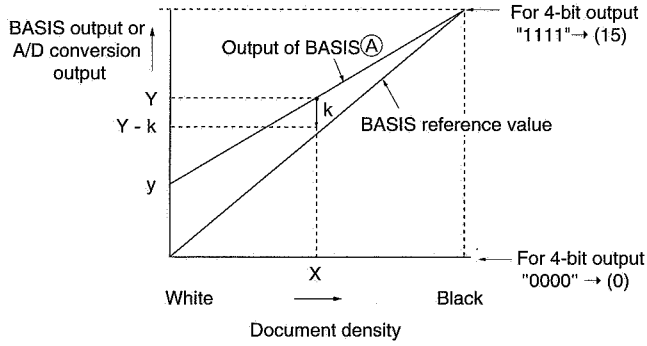

Figure 2-16

An explanation of the principle of shading compensation where only the output of a certain single picture element Ⓐ of BASIS is taken into consideration is given below. (Note that, here, it is assumed that the A/D-converted output is four bits.)

At the time of shipment from the factory, white paper is scanned and the respective BASIS output data stored in memory. Next, the compensation coefficients for making the level of all the individual BASIS data uniform are calculated. The value (y) of a certain scanned picture element of BASIS, Ⓐ, is measured, and, in accordance with that value, all the respective compensation coefficients from "y" to "1111" (15) are calculated and memorized.

During an actual document scan, if the density of its image is "X", the output value (Y-k) after compensation for shading can be obtained by the pre-compensation output Y by the compensation coefficient.

For reference: The RAM that memorizes the compensation coefficient for shading compensation is called "Index Table RAM".

COPYRIGHT © 1996 CANON INC.

Short Focus Lens (fiber optic lens):

A short focus lens has a fiber-shape configuration as shown in Figure 2-17. The characteristic of this lens is that the focal length can be kept short.

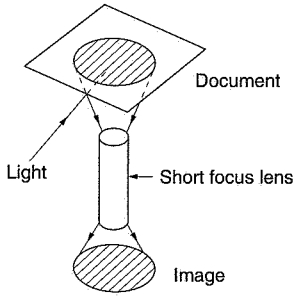

Figure 2-17

Light rays entering the lens are repeatedly reflected inside the lens as shown in Figure 2-18. The interval between these light ray reflections is proportionate to the wave length of the incident light.

For instance, when the lens is shorter than the ratio of the light wave length as in ① of Figure 2-18, the emerging light rays are focused, and when it is long as in ②, the emerging light rays are diffused. When the lens length matches the ratio of the wave lengths as in ③, the emerging light rays are parallel rays, and the image of the document is focused in its original size on the image plane.

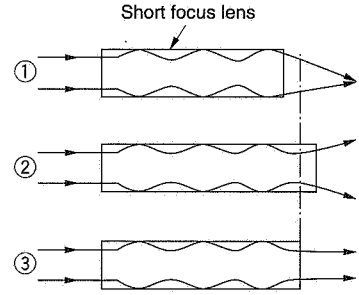

Figure 2-18

COPYRIGHT © 1996 CANON INC.
CANON DR-3020 REV.0 FEB. 1996 PRINTED IN JAPAN (IMPRIME AU JAPON)

4. Line Memory

The line memory is used to memorize one scanning line of data. The shading-compensated data (signal) is temporarily stored in this memory.

Data cannot be read from the memory while a "write" operation is taking place. Consequently, in order to change the "write" and "read" processing timing, a 2-line memory is provided, and "read" and "write" performed alternately, data being written to one line of memory while data is being read from the other memory.

The line memory is used mainly for comparing the image density of the line being read with that of the previous line before edge emphasis image processing takes place.

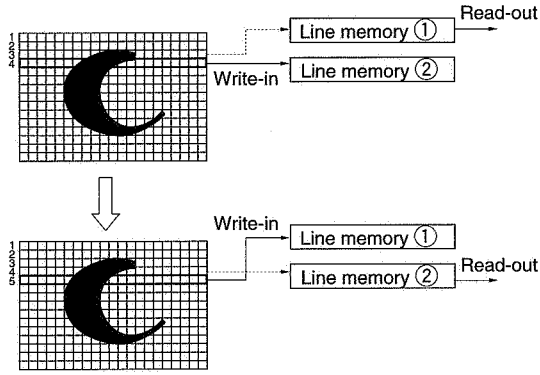

Figure 2-19

COPYRIGHT © 1996 CANON INC.

5. Edge Emphasis Processing

Edge emphasis is a kind of electrical processing which emphasizes light and shade in order to make the image appear sharp.

Figure 2-20 shows the waveform of the image signal obtained after edge emphasis.

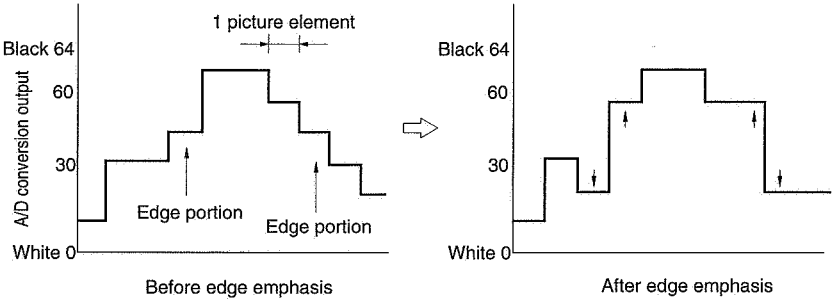

Figure 2-20

Principle: Density processing is performed by comparing the data in the conversion table provided for performing edge-emphasis, with the target picture element.

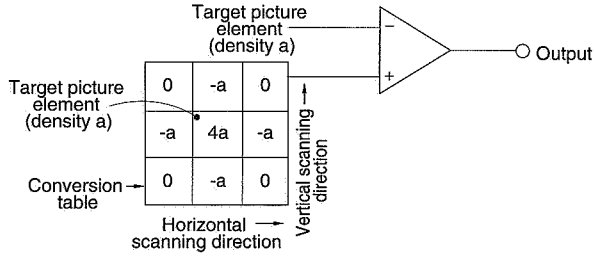

Figure 2-21

COPYRIGHT © 1996 CANON INC.

If the density of the target picture element is increased fourfold and the density at the other four points multiplied by -1, the overall density will remain unchanged.

Arithmetic processing in the horizontal scanning direction takes place simultaneously with data read. Arithmetic processing in the vertical scanning direction takes place by using the line memory to convert the data in the previous line.

Figure 2-22 shows the principle of edge-emphasis processing in the case where the A/D converted data consists of two bits.

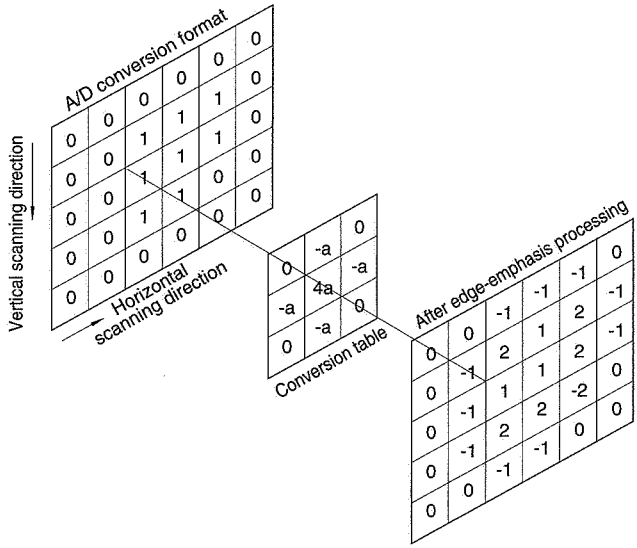

Figure 2-22

6. Dust Picture Element Erase Processing

Dust picture element erase is a kind of electrical processing which erases small black specks (noise) on the document that have nothing to do with the image.

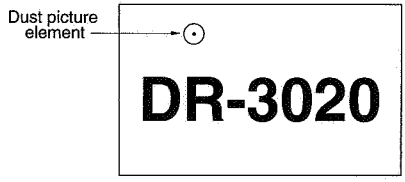

Figure 2-23

This function removes fine grainy specks that result from the above-mentioned edge emphasis processing if a document with a blue background or a dirty document is read.

It removes noise components from the image, thus making the image easier to view, and also raises the encoding rate during image encoding, thus enabling recording to an external recording medium to be carried out efficiently.

Principle: The table below is used to perform dust picture element erasure.

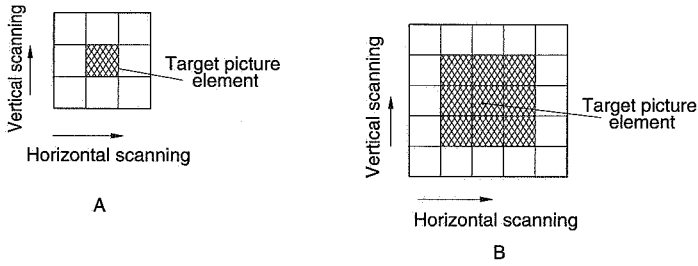

Figure 2-24

For Figure 2-24 A:

If all the 8 dots surrounding the target picture element differ in color from the target picture element, the target picture element will be judged to be dust, and erased.

For Figure 2-24 B:

If all the 16 dots of the one course surrounding the target picture elements differ in color from the target picture elements, the target picture elements will be judged to be dust, and erased.

COPYRIGHT © 1996 CANON INC.

7. Slice Level Processing

As mentioned previously, the image can only be expressed as "black" or "white" when seen in terms of the potential of each picture element.

In order to classify a picture element as either black or white, it is necessary to cut the signals corresponding to the image density of the document, at a certain level, and to judge signals above that level as black and those below it as white. (This is called binarizing.)

For reference: The level at which a picture element is divided into white or black is called the "slice level".

The slice level is normally compared with the digital signal obtained after compensation for shading.

For example, if the BASIS output is converted to a 4-bit digital signal during the digital conversion process, the slice level will be set at a value somewhere between "0" and "15", and compared with the shading-compensated output (a value between "0" = "0000" and "15" = "1111").

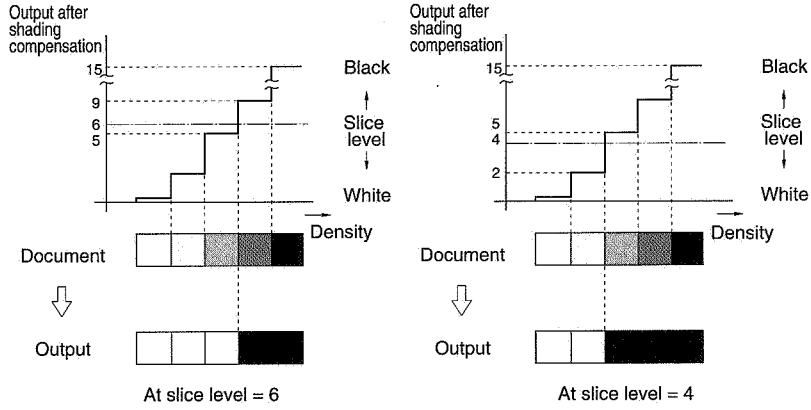

Figure 2-25

COPYRIGHT © 1996 CANON INC.

Figure 2-26 shows an example of the case where the A/D-converted digital signal output is four bits and the slice level is "6." (This machine uses 6-bit digital signals.)

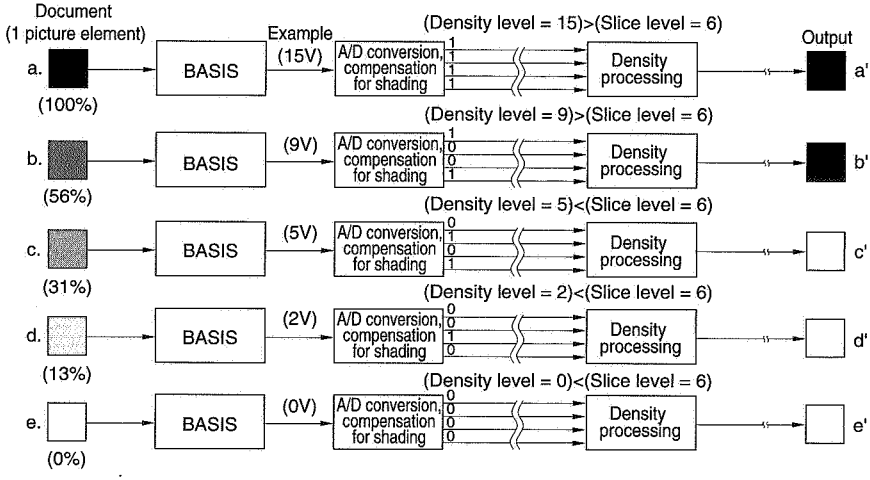

Figure 2-26

COPYRIGHT © 1996 CANON INC.
CANON DR-3020 REV.0 FEB. 1996 PRINTED IN JAPAN (IMPRIME AU JAPON)

8. Tone Compensation (γ Compensation)

When data read with the BASIS is being sent to the image processing section 1, the level of the image data is converted for each picture element in accordance with certain rules and then output.

This is called tone compensation process, the concept of which is explained below.

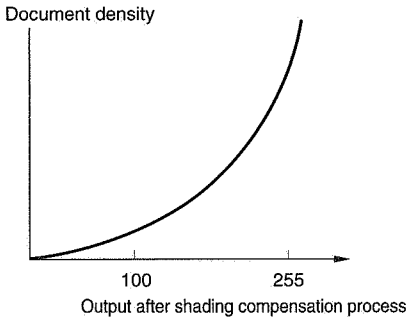

Figure 2-27

The relationship between this document density and the level of output after shading compensation process, or the level of input to γ compensation process is not a straight line. If the level of input from the shading compensation process section is recorded without being subjected to tone compensation, and printed, the result will be a dark printed image.

Accordingly, the level is converted so that an appropriate density is obtained.

① Tone Compensation in Character Mode

Figure 2-28 shows the relationship of tone compensation in character mode.

In character mode, the output level is tone-compensated on the dark side so that the characters are clearly recorded.

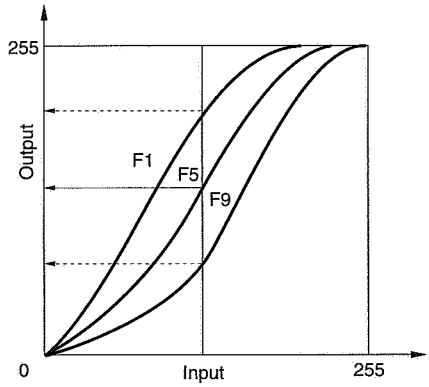

Figure 2-28 Tone Compensation Process in Character Mode

② Tone Compensation in Photograph Mode

Tone compensation in photograph mode, unlike that of character mode, is processed so that light and dark images are faithfully reproduced.

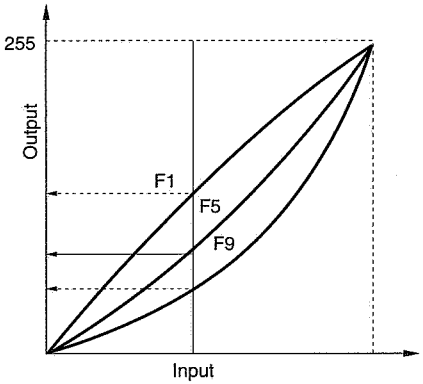

Figure 2-29 Tone Compensation Process in Photograph Mode

COPYRIGHT © 1996 CANON INC.

9. Error Diffusion

The error diffusion process compares the value of one picture element (in the case of 4 bits, dark ones are "0" and the brighter ones, "15": since it is 8 bits in this machine, the values are 0 and 225) of input image data with the threshold value of a certain standard and if it is smaller than the threshold value, outputs it as "0" and if larger, outputs it as 15.

The difference between the values of the input and output picture elements is then added to the next picture element to be processed.

The resultant picture element value with the added value is successively subjected to the next process as the input picture element value. As a result, the input picture element made simply into a binary value and the average value of the overall density of the output image that has been processed using the error diffusion process, are practically the same.

A concrete example of this is as shown in Figure 2-30.

Process the density slice level as "8." First, when processing the first row of Line 1, since density (3) is smaller than the slice level "8," the output density is "0" and the resultant error is +3(=3-0).

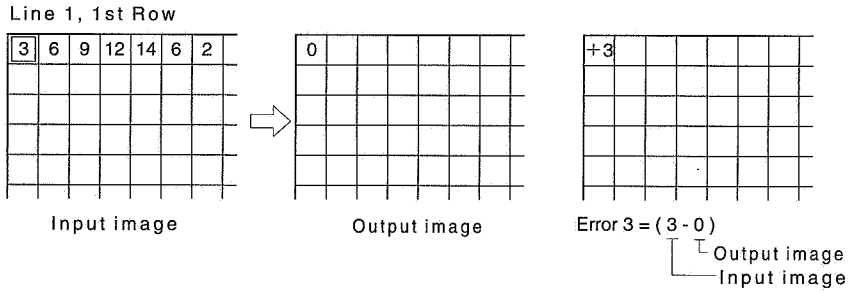

Figure 2-30

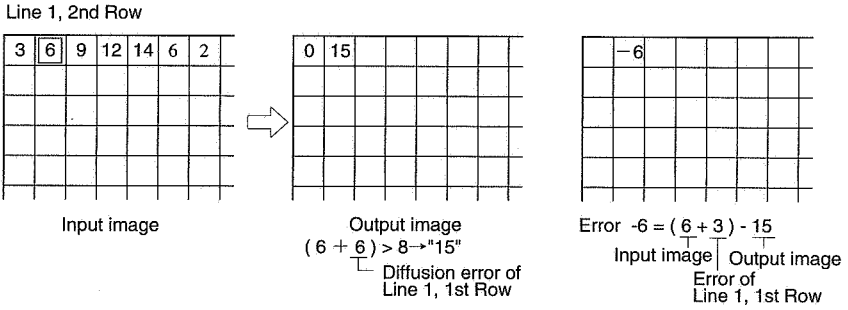

Figure 2-31

COPYRIGHT © 1996 CANON INC. CANON DR-3020 REV.0 FEB. 1996 PRINTED IN JAPAN (IMPRIME AU JAPON)

Next, when processing the second row of Line 1, since the error is diffusion to the right, the density of the picture element of Line 1, 2nd Row becomes "9" (=3+6).

As this value is bigger than the slice level, the output density is "15" and the error becomes "-6" [= (6+3) - 15]. (Figure 2-31)

The picture element density of Line 1, 3rd Row is "3" (=9-6) and smaller than the slice level "8", so the output density becomes "0" and the error "3" [= (9-6) - 0]. (Figure 2-32)

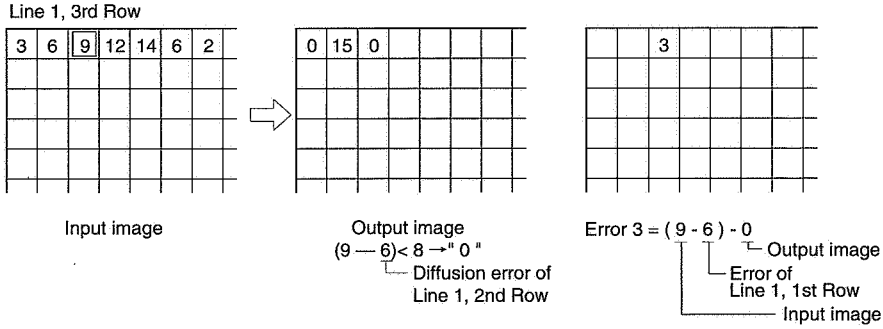

Figure 2-32

If the rest is processed in the same manner, the images become as Figure 2-33:

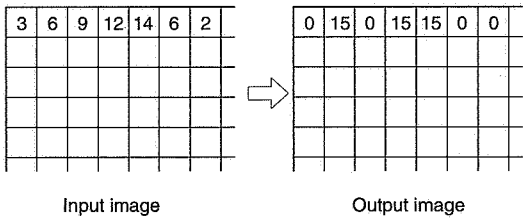

Figure 2-33

In the case of Line 2, the processing is carried out using the density Line 2, 1st Row as the standard. If the rest is processed in the same manner, the images become as Figure 2-34:

3	6	9	12	14	6	2
5	2	10	11	13	8	2
6	3	9	12	14	5	6
4	7	10	15	12	10	5
3	6	13	8	9	6	4

0	15	0	15	15	0	0
0	0	15	15	15	0	0
0	15	0	15	15	0	15
0	15	0	15	15	15	0
0	15	0	15	15	0	0

Figure 2-34

COPYRIGHT © 1996 CANON INC.
CANON DR-3020 REV.0 FEB. 1996 PRINTED IN JAPAN (IMPRIME AU JAPON)

10. Resolution Changing

Resolutions can be selected in this machine from among 300/200 dpi in the horizontal scanning direction and 300/200/150 lpi in the vertical scanning direction.

Principle:

- Changing of Vertical Scanning Resolution
  The document is scanned in the vertical direction, changing the feed speed of the document. In the case of 200 dpi, feed speed is made 1.5 times that of 300 dpi, and in the case of 150 dpi, twice the speed.

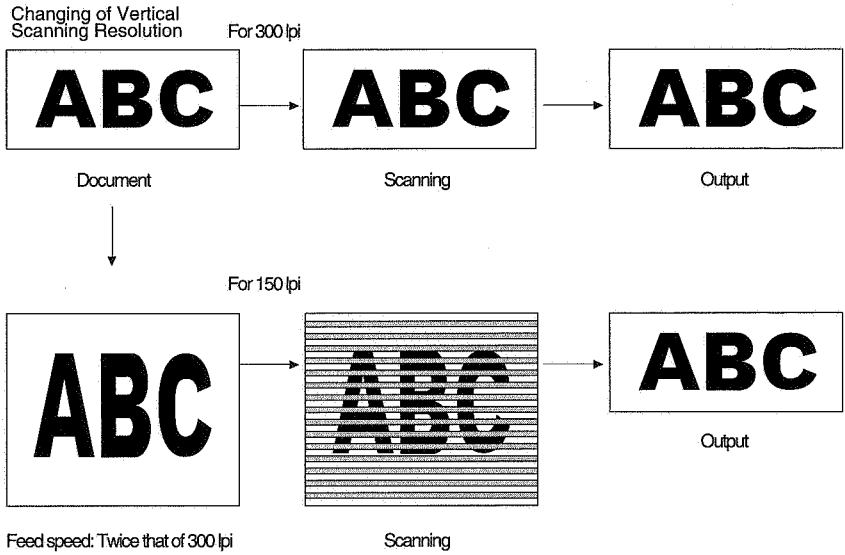

Figure 2-35

• Changing of Horizontal Scanning Resolution

Horizontal scanning resolution is changed by temporarily storing the data in memory and then when reading out the data, skip-reading (thinning-out) picture elements in accordance with the resolution.

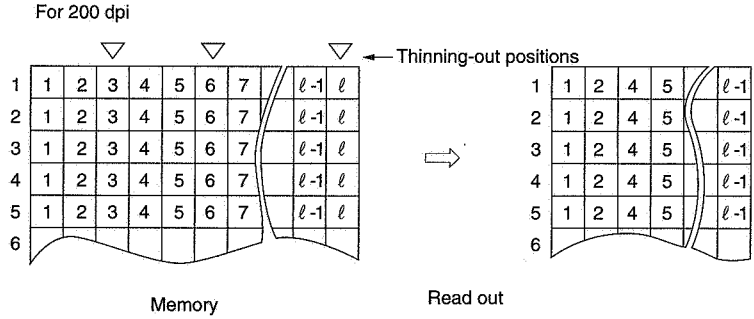

Figure 2-36

COPYRIGHT © 1996 CANON INC. CANON DR-3020 REV.0 FEB. 1996 PRINTED IN JAPAN (IMPRIME AU JAPON)

III. IMAGE ENCODING

1. Outline

As mentioned previously, the image data consists of "black" and "white" picture elements. The image data read by the BASIS can be output directly to a personal computer without problem. However, when it is recorded onto an external recording medium through the personal computer, the amount of data that can be recorded on a single disk is limited due to the capacity of the disk.

To overcome this, it is necessary to reduce the amount of data in the image of the document.

The reduction of the data contained in the image is called "encoding". The opposite process of restoring the encoded data to its original form is called "decoding".

2. Explanation

a. Outline

① Encoding rate

The encoding rate is the ratio of the number of bits of data after encoding to the number of bits before encoding.

$$\text{Decoding rate} = \frac{\text{Number of bits of data after encoding}}{\text{Number of bits of data before encoding}}$$

② One-dimensional encoding format (MH format)

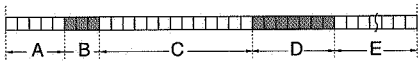

Figure 2-37

One "read" scanning line can be divided alternately into white parts and black parts. This corresponds to A to E in Figure 2-37. The number of picture elements in each of these sections is called the run length, or simply the run. The format of encoding used for encoding and sending the color (white or black) and run length of each of these sections is called run length encoding. The code used is a modified Huffman code, hence it is called Modified Huffman encoding format. (Also abbreviated to MH format.) This format is called a one-dimensional encoding format because it can only be encoded in the horizontal scanning direction (i.e. in one dimension) of a document which widens in one dimension.

③ Two-dimensional encoding (MR format)

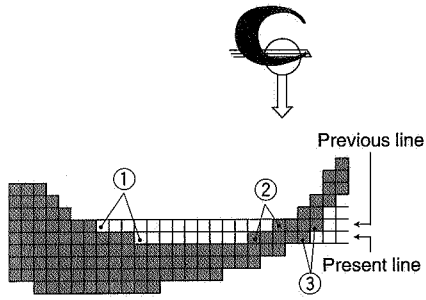

Figure 2-38

COPYRIGHT © 1996 CANON INC.

By enlarging two continuous scanning lines such as those shown in Figure 2-38, then comparing the positions of the black/white boundary squares on the respective scanning lines, it can be seen that they are offset in the left-right direction. Specifically, this refers to parts ①, ②, and ③ in the figure. The format of encoding whereby the positions of the black/white boundary squares on one line are compared with the corresponding positions on the previous line, and the offset encoded, is called two-dimensional encoding.

The name "two-dimensional encoding" comes from the fact that the positions of the black/white boundary squares in the horizontal (left-right) scanning direction in one line are compared with those of the previous line in the vertical scanning direction.

This is called Modified Read encoding format. The word "READ" is an acronym meaning Relative Element Address Designative.

This format is used for documents with squarish characters such as Chinese characters.

This encoding format has the disadvantage that because encoding always proceeds while the data on one line is compared with that on the previous line, once an encoding error occurs it will affect the subsequent lines as well.

④ MMR format

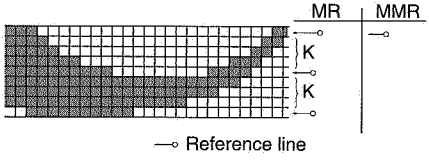

Figure 2-39

In the MR format, one line in every K lines (k parameter: described later) is encoded by one-dimensional encoding, and the remaining lines are encoded by two-dimensional encoding. In the MMR format (Modified Modified Read), all the lines will be encoded by two-dimensional encoding on the basis that there is one imaginary white line in all before the first line.

This encoding method results in a higher image compression rate than that of the MR format.

b. One-dimensional encoding formats

① Run length

Looking at a single scanning line, it can be seen that it can be divided alternately into several white and black sections.

The sections A, B, C, D, and E in Figure 2-40 below are called runs. For example, section A is a white run.

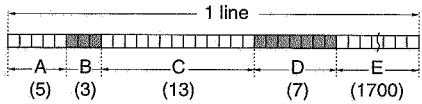

Figure 2-40

Run length of Figure 2-40 is as shown in Table 2-1.

Area	Run	Run Length
A	White run	5
B	Black run	3
C	White run	13
D	Black run	7
E	White run	1700
Total	—	1728

Table 2-1

COPYRIGHT © 1996 CANON INC. CANON DR-3020 REV.0 FEB. 1996 PRINTED IN JAPAN (IMPRIME AU JAPON)

② Terminating code and make-up code

When image data is being encoded, each line is encoded using Huffman code. A Huffman code consists of a terminating code and a make-up code.

Terminating codes

White run length	Code	Black run length	Code
0	00110101	0	0000110111
1	000111	1	010
2	0111	2	11
3	1000	3	10
4	1011	4	011
5	1100	5	0011
6	1110	6	0010
7	1111	7	00011
8	10011	8	000101
9	10100	9	000100
10	00111	10	0000100
54	[illegible]	54	[illegible]
55	01011000	55	000000100111
56	01011001	56	000000101000
57	01011010	57	000001011000
58	01011011	58	000001011001
59	01001010	59	000000101011
60	01001011	60	000000101100
61	00110010	61	000001011010
62	00110011	62	000001100110
63	00110100	63	000001100111

Table 2-2

Make-up codes

White run length	Code	Black run length	Code
64	11011	64	0000001111
128	10010	128	000011001000
192	010111	192	000011001001
256	0110111	256	000001011011
[illegible]	[illegible]	[illegible]	[illegible]
1536	[illegible]	[illegible]	[illegible]
1600	010011010	1600	0000001011011
1664	011000	1664	0000001100100
1728	010011011	1728	0000001100101
EOL	000000000001	EOL	000000000001

Table 2-3

Make-up Codes (added)

Run length (white or black)	Make-up code
1792	00000001000
1856	00000001100
1920	00000001101
[illegible]	[illegible]
2496	[illegible]
2560	000000011111

Table 2-4

③ Method of encoding

A read scanning line is divided into runs (A to D) as shown in Table 2-5, then each run is encoded as follows:

- When the run length is 63 or less

The sections with a run length of 63 or less are A, B, C, and D. These sections are encoded using only terminating codes.

In other words, the Huffman code for these runs consists of only a terminating code.

Part run	Run length	Make-up code	Terminating code	Huffman code
A White run	5	None	1100	1100
B Black run	3	None	10	10
C White run	3	None	000011	000011
D Black run	7	None	00011	00011

White run length	Code	Black run length	Code
0	00110101	0	0000110111
1	000111	1	010
2	0111	2	11
3	1000	3	10
4	1011	4	011
5	1100	5	0011
6	1110	6	0010
7	1111	7	00011
8	10011	8	000101
9	10100	9	000100
10	00111	10	0000100
11	01000	11	0000101
12	001000	12	0000111
13	000011	13	00000100
14	0100	14	00000111
		15	000011000
		16	0000011000
		17	0000001000

Table 2-5

- When the run length is 64 or more

These sections are encoded using one make-up code and one terminating code.

First, the machine refers to the make-up code table and finds a run length which is either smaller than or the same as the actual run length. Next, it refers to the terminating code table and finds the difference between the actual run length and the run length of the make-up code, then encodes the section.

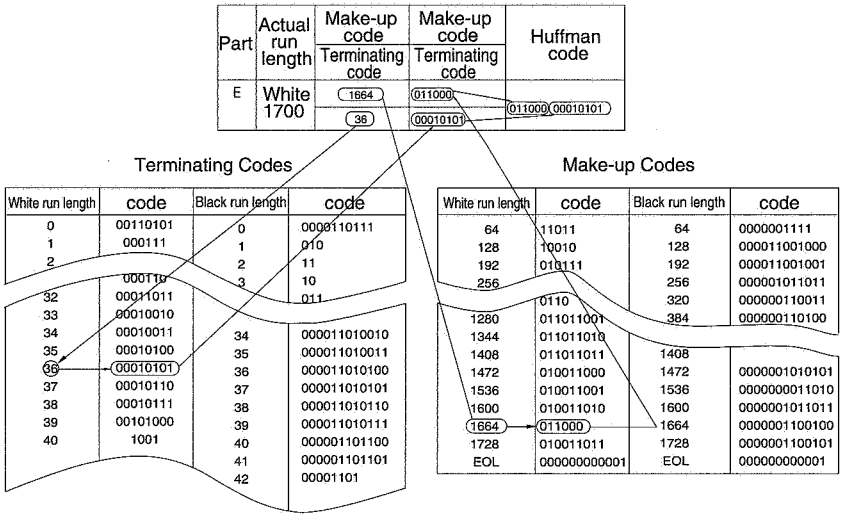

Table 2-6

COPYRIGHT © 1996 CANON INC. CANON DR-3020 REV.0 FEB. 1996 PRINTED IN JAPAN (IMPRIME AU JAPON)

The encoding of one scanning line is as follows:

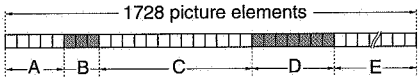

Part	Run		Huffman code	Bit of Huffman code
A	White	5	1100	4
B	Black	3	10	2
C	White	13	000011	6
D	Black	7	00011	5
E	White	1700	01100000010101	14
Total		1728		31

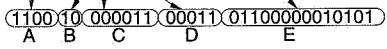

Data

Table 2-7

In the above example, 1728 bits (one line of picture elements) are encoded into 31 bits, that is, the compression rate is

31 bits/1728 bits = approx. 1/56.

- When the run length agrees with the make-up code

Both a white run of 640 and a black run of 1088 correspond with values in the make-up code table. However, it is not possible to encode data using a make-up code alone, hence it is necessary to use a terminating code (run length 0) at the end run length of the make-up code.

White run 640 = White run 640 + White run 0
Make-up code Terminating code

- When the beginning of a scanning line is a black run

This machine is designed so that the encoding of a scanning line starts from white when a scanning line starts with a black run, as shown in Figure 2-41, a white run of run length zero, that is, a dummy run is inserted in front of the first run of the first scanning line before encoding takes place.

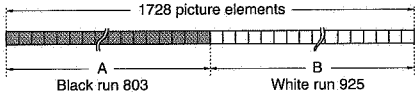

Figure 2-41

Run			Code	No. of data bits
Dummy	White	0	00110101	8 bits
A	Black	803	000000100110000 0011010011	25 bits
B	White	925	011010011000000 10	17 bits
Total run length		1728	No. of data bits	50 bits

When scanning line starts with black line

Table 2-8

- EOL

The EOL (End of Line) shown in the make-up code table is called a line terminating code. It is code which indicates the end of a line.

COPYRIGHT © 1996 CANON INC.

c. Two-dimensional encoding format

① Reference line and encoding line

In a two-dimensional encoding method, encoding proceeds while the present line is compared with the previous line. Consequently, the line presently being encoded is called the encoding line, and the previous line is called the reference line.

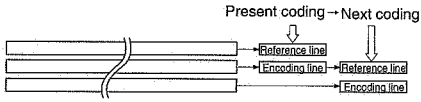

Figure 2-42

② Parameter K

As mentioned above, two-dimensional encoding takes place while the present line is compared with the previous line. Consequently, the scanning lines on one page are gathered into groups of several lines each. The first line is encoded by one-dimensional encoding, as mentioned above, and the subsequent lines are encoded by two-dimensional encoding while the data in the present line is compared with that of the previous line. The number of lines in a group is called parameter K. (Used with the MR format.)

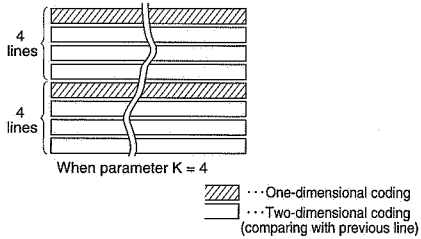

Figure 2-43

③ Change picture element

A picture element whose immediately preceding picture element and color (white or black) are different is called a change picture element. In other words, a change picture element is the first picture element of each run.

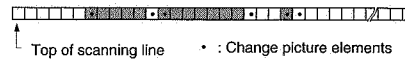

Figure 2-44

④ Relative distance

Relative distance is the distance between one picture element, taken as a datum, and another.

The side to the right of the datum picture element is the plus side, and the side to the left of it is the minus side. The two picture elements may sometimes lie on the same scanning line, or on different scanning lines.

For example, in Figure 2-45, if "a" is taken as the reference, the relative distances of "b," "c," and "d" from "a" are as follows:

ab = 4

ac = -5

ad = 0

Assume, for example, that the absolute value of a relative distance is |5|.

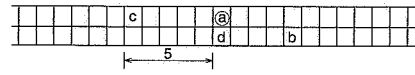

Figure 2-45

COPYRIGHT © 1996 CANON INC. CANON DR-3020 REV.0 FEB. 1996 PRINTED IN JAPAN (IMPRIME AU JAPON)

The absolute value of the relative distance is simply the distance between two picture elements, without using either of them as a datum.

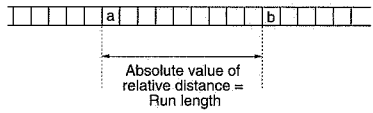

Figure 2-46

The absolute value of the relative distance is the same as the run length from "a," including "a," to a point immediately before "b," as shown in Figure 2-46.

⑤ Necessary picture elements for encoding

Encoding takes place after the picture elements a0, a1, a2, b1, and b2 on the encoding line and reference line have been determined.

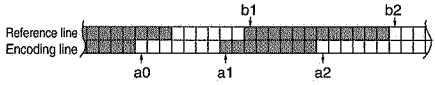

Figure 2-47

First, the position of a0 is determined, then the positions of the remaining picture elements (a1, a2, b1, and b2) are determined.

a0: This is the reference picture element or starting point change picture on the encoding line. This position is determined by the previously executed encoding mode.

Assume that the white picture element immediately before the actual picture element is a white picture element and that it is a0.

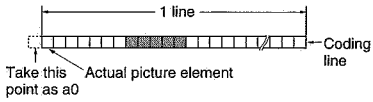

Figure 2-48

a1: First change picture element to the right of a0 on the encoding line

a2: First change picture element to the right of a1 on the encoding line

b1: First change picture element of the opposite color to a0 on the right of a0, on the reference line.

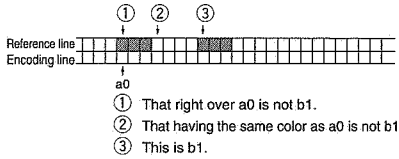

Figure 2-49

d. Encoding mode

From the positional relationship between a0, a1, a2, b1, and b2 on the reference line and encoding line, encoding takes place in one of three encoding modes.

① Pass mode

This mode is used when b2 is on the left of a1, as shown in Figure 2-50. Encoding in this mode takes place with the code "0001" (P is used as a symbol). After encoding has taken place, a0 is moved to the picture element on the encoding line immediately below b1 (i.e. 0') in preparation for the next encoding operation.

COPYRIGHT © 1996 CANON INC.

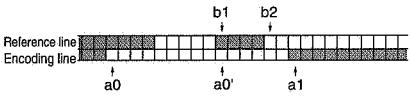

Figure 2-50

However, if b2 is directly above a1, the pass mode is not used.

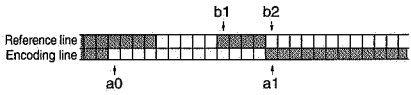

Figure 2-51

② Vertical mode

This mode is used when the pass is not used and the absolute value | a1 b1 | of the relative distance between b1 and a1 is no more than 3.

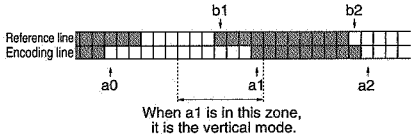

Figure 2-52

During the encoding process, the relative distance between a1 and b1 is expressed using the following symbols.

V(0)...a1 is directly beneath b1

VR(n)...a1 is on the right of b1

VL(n)...a1 is on the left of b1

Where n is the absolute value of the relative distance between a1 and b1.

n = 1,2,3

After encoding, the position of a1 becomes the position of the new a0, in preparation for the next encoding operation.

③ Horizontal mode

This mode is used when neither the pass mode nor the vertical mode is used and the absolute value | a1b1 | of the relative distance between b1 and a1 is 3 or more.

In this mode, encoding is performed by inserting the absolute value of the relative distance | a0a1 | and |a1a2 | with Huffman code M (a0a1) and M (a1a2) after code "001" (expressed using symbol H) which represents the horizontal mode.

M(a0a1) is the Huffman code of run length of the color which contains a0, and M(a1a2) is the Huffman code of run length of the color which contains a1.

The Huffman code is exactly the same code as that used in one-dimensional encoding.

After encoding, the position of a2 becomes the position of a0, in preparation for the next encoding operation.

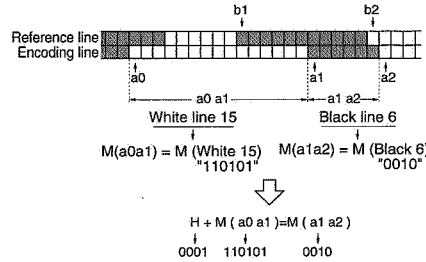

Figure 2-53

COPYRIGHT © 1996 CANON INC.
CANON DR-3020 REV.0 FEB. 1996 PRINTED IN JAPAN (IMPRIME AU JAPON)

e. Encoding procedure

The encoding procedure determines which of the following three encoding modes is to be used. After the encoding mode has been determined, encoding takes place using the code in Table 2-9. The encoding procedure is shown in the flowchart of Figure 2-54.

Procedure 1

① When the pass mode is detected, encoding takes place with code "0001". Subsequently, picture element a0' directly below b1 becomes the new a0, in preparation for the next encoding operation.

② If the pass mode is not detected, the program proceeds to procedure 2.

Procedure 2

① The absolute value of the relative distance a1b1 is calculated.

② If | a1b1 ≦3, a1b1 is encoded using the vertical mode. After encoding, a1 becomes the new a0, in preparation for the next encoding operation.

③ If | a1b1 ≧3, run lengths a0a1 and a1a2 are encoded using one-dimensional encoding after code "001" which indicates the horizontal mode. Subsequently, a2 becomes the new a0, in preparation for the next encoding operation.

Mode	Code		Mark	Code
Pass	b1b2		P	0001
Horizontal	a0a1, a1a2		H	001+M (a0a1) +M (a1a2) Note
Vertical	a1 just below b1	a1b1=0	V (0)	1
	a1 is at right of b1	a1b1=1	VR (1)	011
		a1b1=2	VR (2)	000011
		a1b1=3	VR (3)	0000011
	a1 is at left of b1	a1b1=1	VL (1)	010
		a1b1=2	VL (2)	000010
		a1b1=3	VL (3)	0000010

Note: Those in parenthesis refer to the code in Tables 2-2, -3, and -4.

Table 2-9

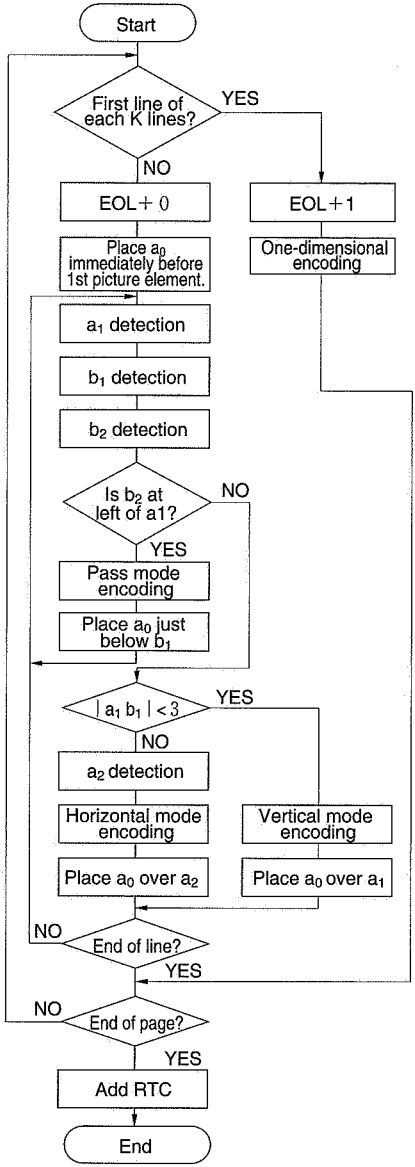

RTC means the signal that indicates end of one page of image.

Figure 2-54

f. Start and end of encoding line

① Processing at the start of the encoding line

At the start of the encoding line, it is assumed that a white picture element exists immediately before an actual picture element, and a0 is placed immediately over it.

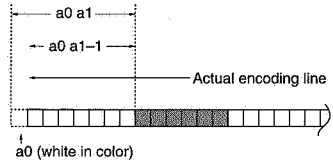

Figure 2-55

Because a0 is not located above an actual picture element, the first run length, a0a1, of the line is replaced by a0a1-1. As shown in Figure 2-55, a0a1 is white run length 8, however the actual number of picture elements is only 7. Consequently, a0a1 is replaced by a0a1-1, that is, by 7.

As a result, the first picture element of the encoding line is black, as shown in Figure 2-56, and if the line is encoded in the horizontal mode, M(a0a1) will be white run 0.

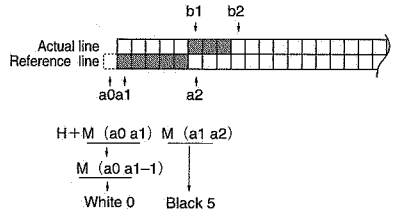

Figure 2-56

When the encoding line shown in Figure 2-57 starts with a black picture element:

Figure 2-57 shows an example of encoding the first part of the scanning line.

COPYRIGHT © 1996 CANON INC.
CANON DR-3020 REV.0 FEB. 1996 PRINTED IN JAPAN (IMPRIME AU JAPON)

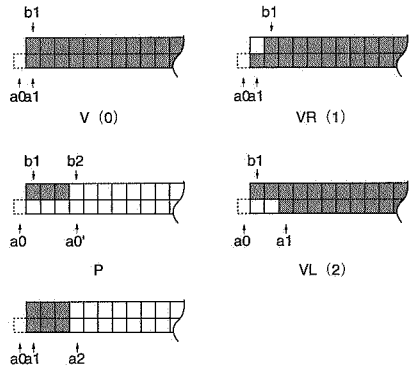

Figure 2-57

② Processing at the end of the encoding line

At the end of the encoding line, it is assumed that a picture element of the opposite color to that of the last picture element on the actual encoding line exists. Encoding continues until the opposition of this picture element is encoded.

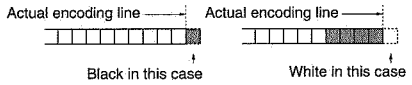

Figure 2-58

This picture element is encoded as a1 in the vertical mode, and as a1 or a2 in the horizontal mode. If neither b1 nor b2 is detected at an actual picture element on the reference line, or if b2 only is detected, b1 or b2 will be replaced immediately after the last picture element on the reference line.

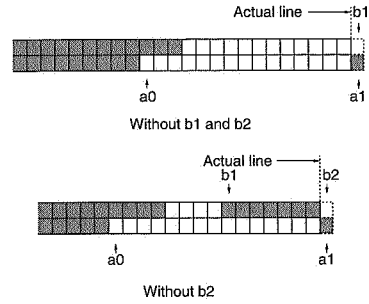

Figure 2-59

An example of encoding of the scanning line end is shown in Figure 2-60.

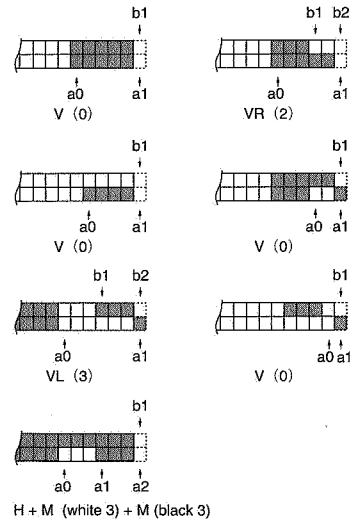

Figure 2-60

COPYRIGHT © 1996 CANON INC.

CHAPTER 3

OUTLINE OF OPERATION

In outline diagrams, ▭▭▭ represents mechanical drive paths, and ⟶ indicates electrical signal paths.

Signals in digital circuits are identified as 'H' for High and 'L' for Low. The voltage of signals in Low is very close to zero; that of signals in High depends on the circuit.

Nearly all operations of the carrier are controlled by microprocessors. As the processors are not a part relevant to the serviceman's work, their internal operations are not described here. Further, as PCBs are not repaired at the customer's premises, the operation of the circuits are explained by means of block diagrams rather than circuit diagrams.

For the purpose of explanation, circuits are divided into the following: from sensors to controller PCB input ports and from controller output ports to loads. Discussion, further, is by function.

I. SYSTEM CONFIGURATION 3-1
II. EXPOSURE SYSTEM 3-2
III. BASIC OPERATION 3-4
IV. OUTLINE OF ELECTRICAL CIRCUITS 3-8
V. INPUT TO AND OUTPUT FROM MAIN PCB ASSEMBLIES 3-10
VI. DOCUMENT PICK-UP ASSEMBLY 3-12
VII. HARDWARE CONFIGURATION 3-23
VIII. FLOW OF IMAGE DATA 3-27
IX. DESCRIPTION OF ELECTRICAL CIRCUITS 3-34
X. INTERFACE 3-53
XI. POWER SUPPLY 3-65
XII. LAYOUT OF ELECTRICAL COMPONENTS 3-67
XIII. REFERENCE LIST OF VARIABLE RESISTORS (VR), LEDS, AND CHECK PINS FOR EACH PCB 3-71
XV. LAYOUT OF MAJOR PCB DEVICES 3-74

COPYRIGHT © 1996 CANON INC. CANON DR-3020 REV.0 FEB. 1996 PRINTED IN JAPAN (IMPRIME AU JAPON)

I. SYSTEM CONFIGURATION

System configuration is as follows:

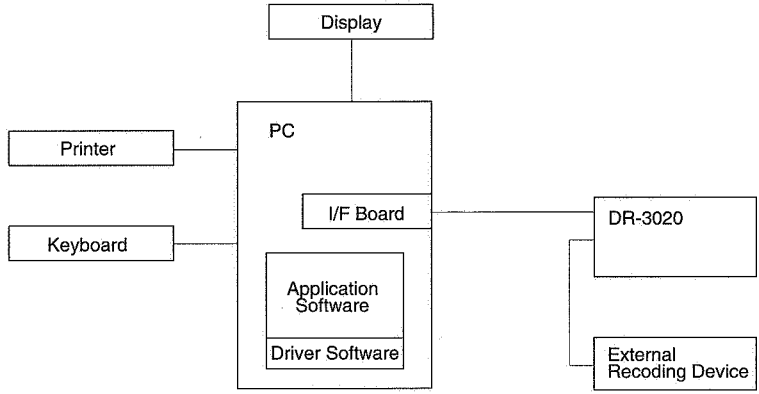

Figure 3-1

PC (Personal Computer)	: Controls the system
CPU	: Equal to or higher than 486, Clock 66 MHz, RAM 8MB Windows® 3.1
Display	: Displays image, and displays retrieved, registered screen.
Printer	: Prints out image
Keyboard	: Instructs image input, retrieving, etc.
DR-3020 (this machine)	: Carries out image input
External Recoding Device	: Records image, and retrieve ID
I/F Board	: Interfaces with SCSI Adaptec · AHA-1542CF ISA 154x · AHA-2742 EISA 2700 Series · AHA-2842 VL Local Bus card · AHA-2940 PCI PCI card
Application Software	: Software for recording and retrieving image
Driver Software	: Software for operating DR-3020

COPYRIGHT © 1996 CANON INC.

II. EXPOSURE SYSTEM

A. Scanner

Figure 3-2 shows the scanner used in this machine.

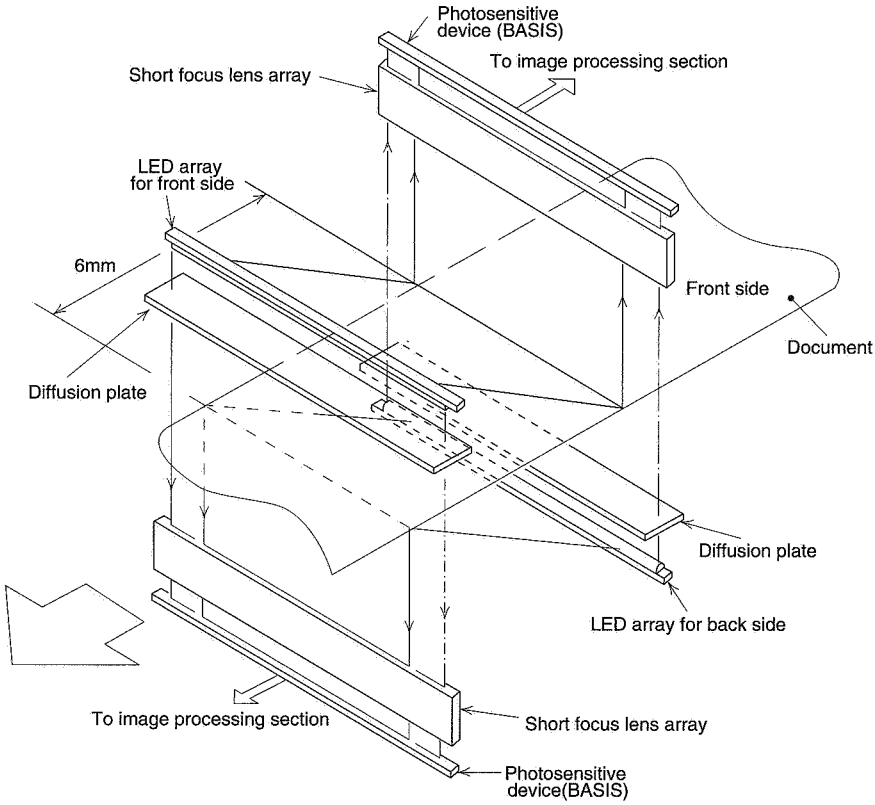

Figure 3-2

The document is illuminated back and front at the image readout area by two LED arrays while being conveyed at either high speed (241.9 mm/sec), midium speed (181.4 mm/sec) and low speed (121.0 mm/sec).

The light reflected on the document converges, via the short focus lens arrays (fiber optic lens array), on to the BASIS to form an image of equal size.

The front and back sides of the document are read at points that are offset by 6 mm in order to prevent the image on the back side of the document from being read through to the front side.

Light reflected off the document is photo-electrically converted by the BASIS and the resulting signals are variously processed by the image processing section.

COPYRIGHT © 1996 CANON INC.

While the image is being scanned, light from the LED arrays are diffused by the diffusion plates, and light is illuminated from the back of the document. By this means, the background area of the document is made "white".

COPYRIGHT © 1996 CANON INC. CANON DR-3020 REV.0 FEB. 1996 PRINTED IN JAPAN (IMPRIME AU JAPON)

III. BASIC OPERATION

A. Functions

The functions of this machine can be broadly classified into the following three sections: read-out assembly, feeder assembly, and control assembly.

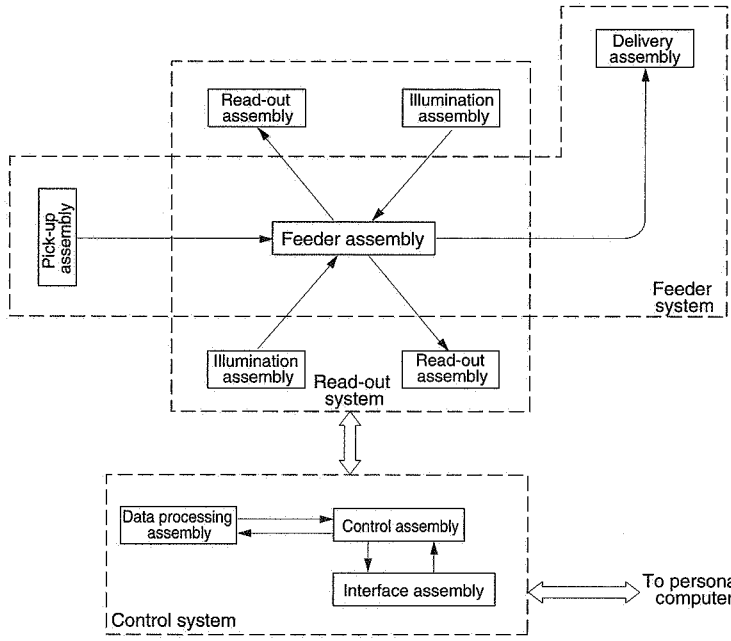

Figure 3-3

COPYRIGHT © 1996 CANON INC.
CANON DR-3020 REV.0 FEB. 1996 PRINTED IN JAPAN (IMPRIME AU JAPON)

B. Main Drive

This machine has a main motor (M1) which is used to convey the document and a document board motor (M2) which is used to raise and lower the document board.

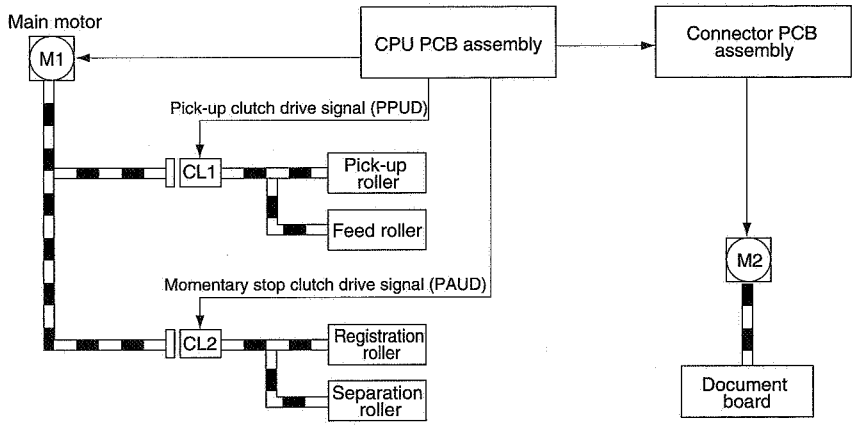

Figure 3-4

C. Power ON Sequence

Figure 3-5 shows the power ON sequence of this machine.

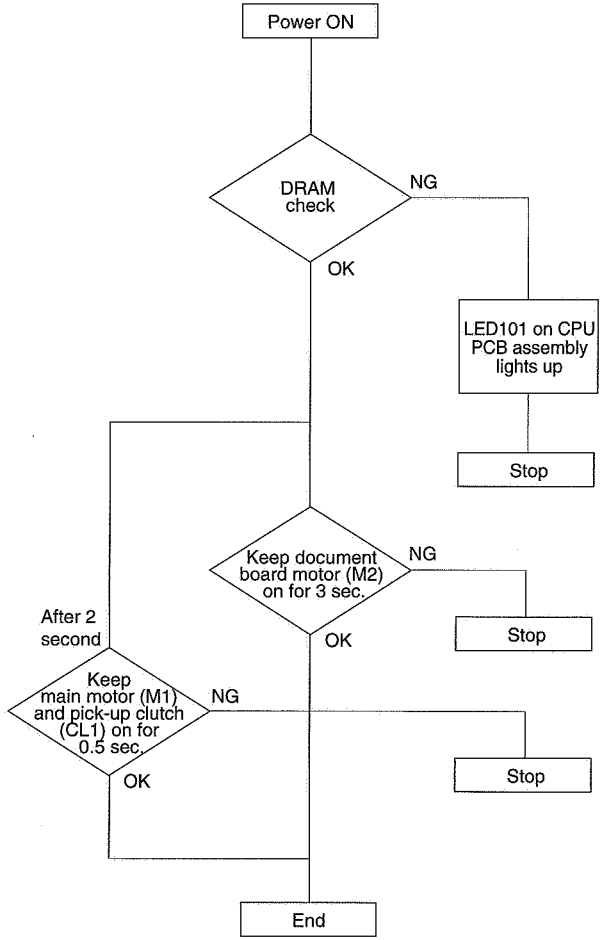

Figure 3-5

COPYRIGHT © 1996 CANON INC.
CANON DR-3020 REV.0 FEB. 1996 PRINTED IN JAPAN (IMPRIME AU JAPON)

D. Timing Chart

Figure 3-6 shows a timing chart for each of double-sided, A4 sheets whith, 300 dpi x 300 lpi without momentary stop.

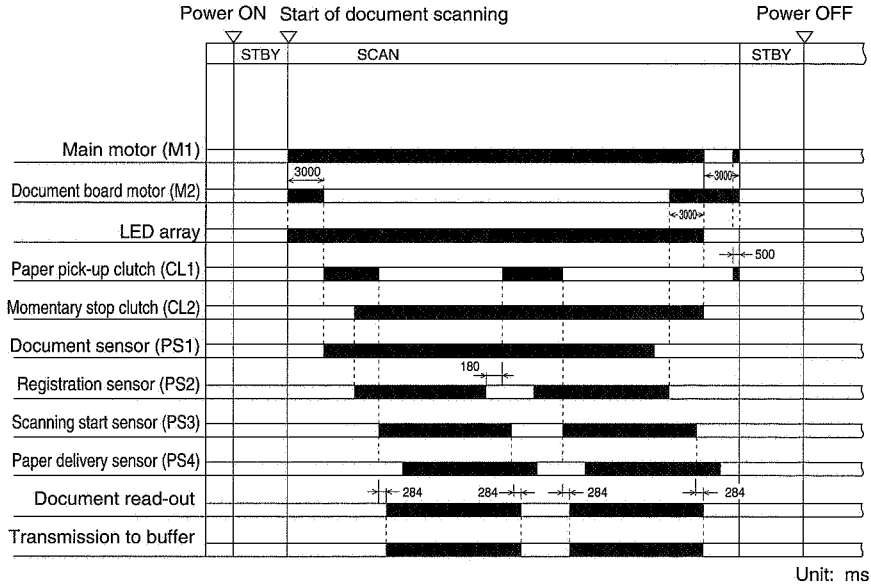

Figure 3-6

Duration		Purpose
SCAN	Time during which the main motor is ON	• Picking up the document • Illuminating the document by the LED array and projecting its reflected light onto BASIS
STBY	Time during which the command can be accepted	Preparing for receiving document scanning

Table 3-1

COPYRIGHT © 1996 CANON INC.

IV. OUTLINE OF ELECTRICAL CIRCUITS

The main electrical control of the machine is performed by a single microprocessor on the CPU PCB assembly.

CPU PCB assembly

IC115

- Control of document feed
- Control of image data
- Communication with external devices

This microprocessor, in accordance with a pre-stored program, outputs the necessary signals to loads such as motors and solenoids, and circuits in other PCB assemblies, in compliance with commands from sensors and the personal computer.

A frash ROM is connected to the microprocessors on the CPU PCB.

The frash ROM is used to store communications exchanged with external devices, programs of this machine sequence, etc., and other data.

COPYRIGHT © 1996 CANON INC.
CANON DR-3020 REV.0 FEB. 1996 PRINTED IN JAPAN (IMPRIME AU JAPON)

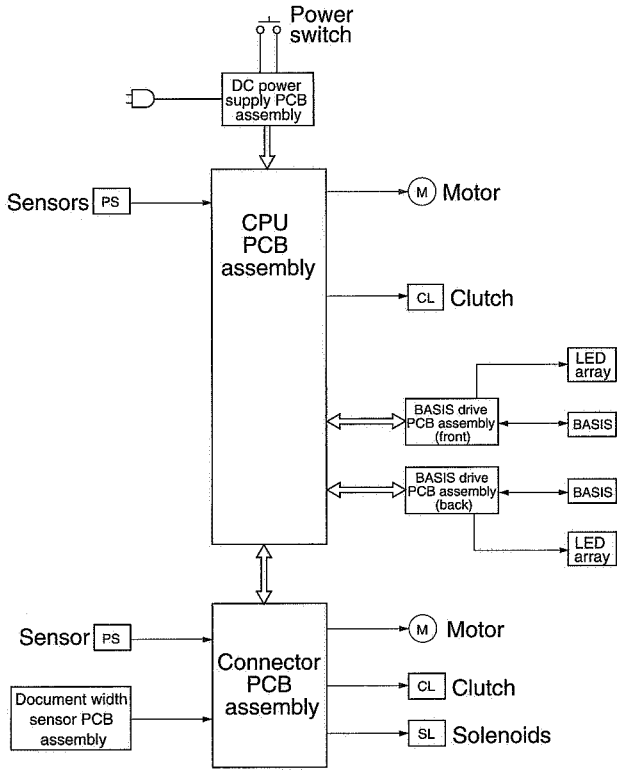

Figure 3-7

COPYRIGHT © 1996 CANON INC.

V. INPUT TO AND OUTPUT FROM MAIN PCB ASSEMBLIES

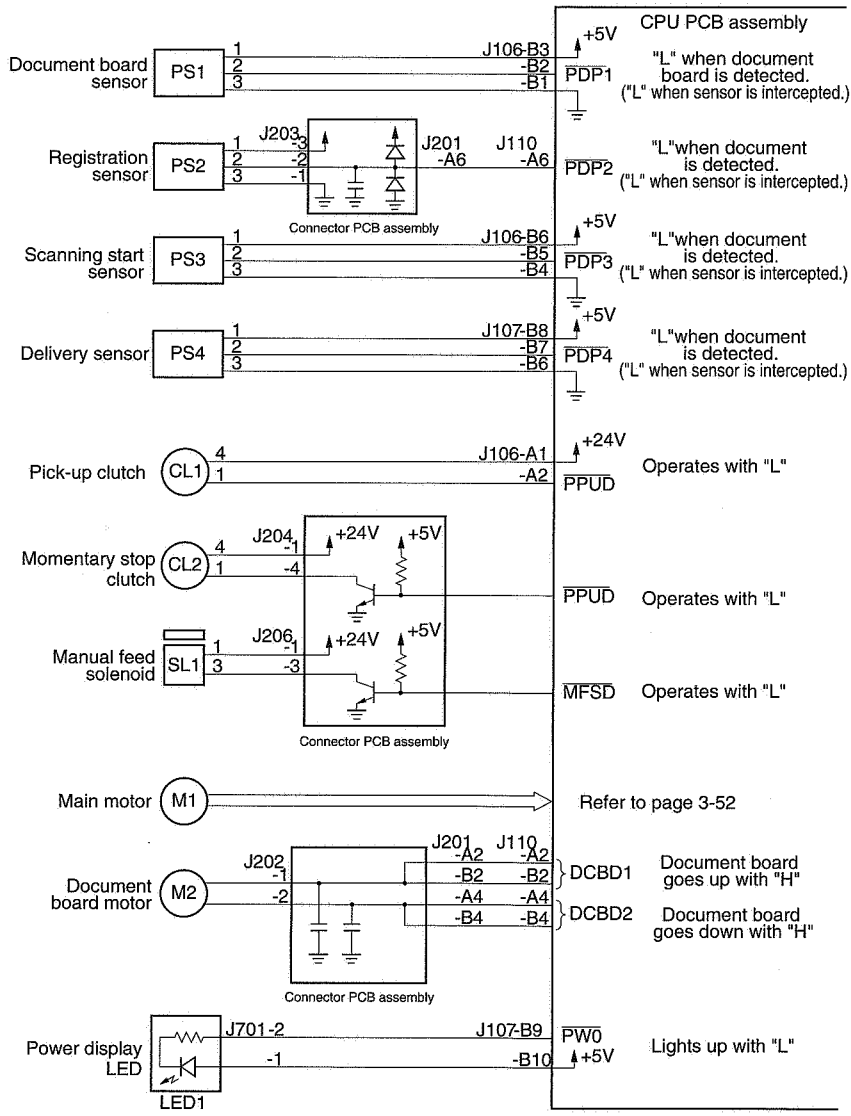

Figure 3-8

COPYRIGHT © 1996 CANON INC.

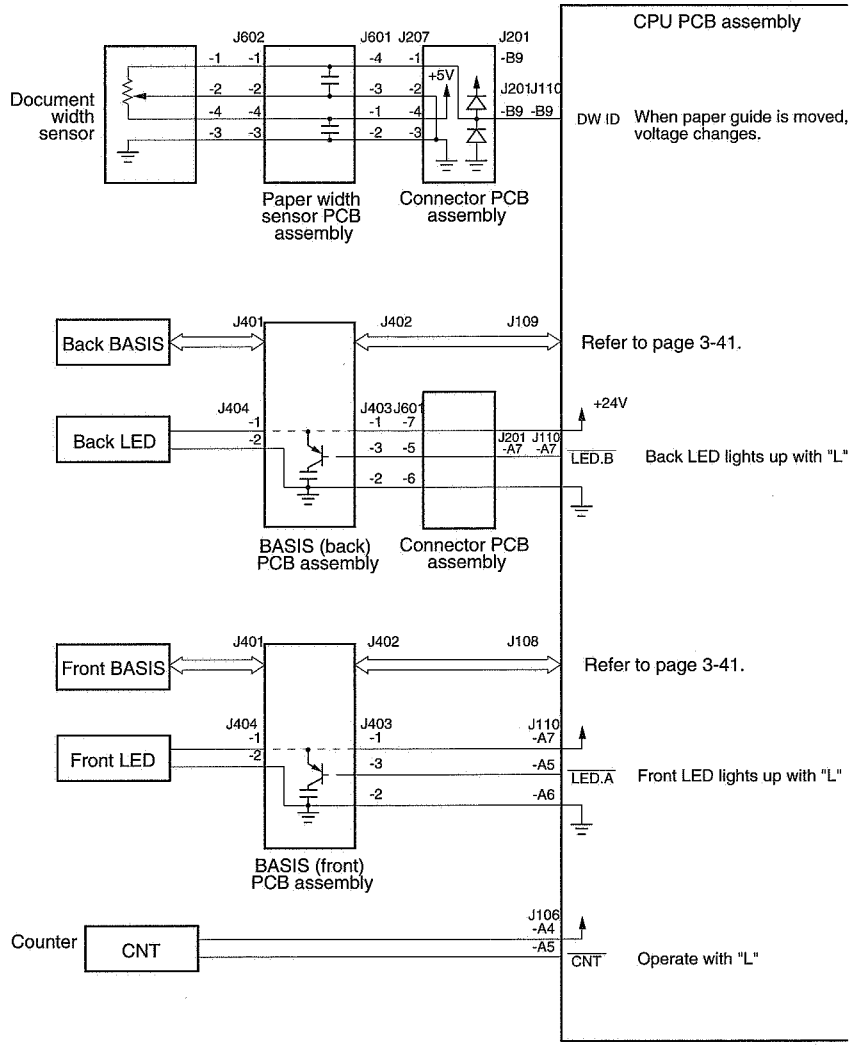

Figure 3-9

COPYRIGHT © 1996 CANON INC. CANON DR-3020 REV.0 FEB. 1996 PRINTED IN JAPAN (IMPRIME AU JAPON)

VI. DOCUMENT PICK-UP ASSEMBLY

A. Outline

The document pick-up assembly of this machine consists of the following assemblies.

- Document board drive assembly
  During automatic pick-up, this assembly pushes up the document board automatically, and when pick-up is finished, returns it to its original position.
- Manual feed switchover assembly
  This unit is designed to switch over from document paper pick-up to manual feed.
  This also stops the drive of the separation roller to cancel the separation function.
- Automatic adjust/separation assembly
  This assembly automatically changes the space between the pick-up roller and separation roller in accordance with the thickness of the document, and separates/feeds one document one by one without any jamming and double feeding.

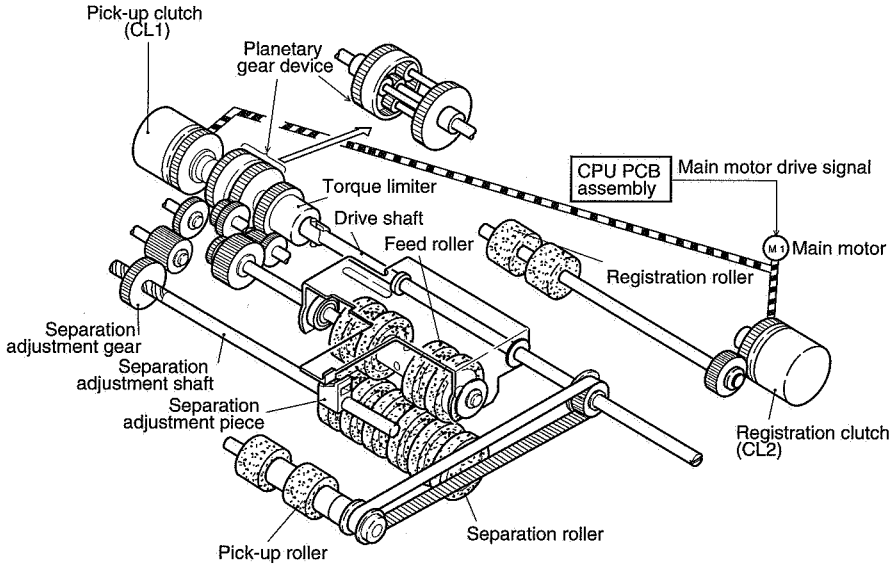

Figure 3-10

COPYRIGHT © 1996 CANON INC.
CANON DR-3020 REV.0 FEB. 1996 PRINTED IN JAPAN (IMPRIME AU JAPON)

B. Automatic Adjust/Separation Assembly

Figure 3-10 shows the outline of the document pick-up assembly.

The pick-up assembly consists of a pick-up roller, feed roller, torque limiter registration roller, planetary gear device, and other components.

An outline of the planetary gear device is shown in Figures 3-11 and 3-12.

1. Planetary Gear Device

a. The planetary gear device consists of a sun gear that transmits the drive of the drive shaft, a carrier that transmits the drive from the feed roller, an internal gear that drives the separation adjustment piece, and three planetary gears that transmit the drive from the sun gear and carrier.

b. The carrier and internal gear of the planetary gear device have been installed to rotate freely on the drive shaft and the planetary gears too have been installed to rotate freely relative to the planetary shaft.

c. The sun gear is directly connected to the drive shaft.

d. The internal gear of the planetary gear device is driven by the carrier and the sun gear.

e. The carrier rotates the three planetary gears attached to the planetary shafts.

f. On the other hand, the sun gear drives the planetary gears.

g. The rotation of the internal gear is as follows:
   - When rotation speed of carrier > rotation speed of sun gear (planetary gears)
     → Turns in counterclockwise direction.
   - When rotation speed of carrier < rotation speed of sun gear (planetary gears)
     → Turns in clockwise direction.

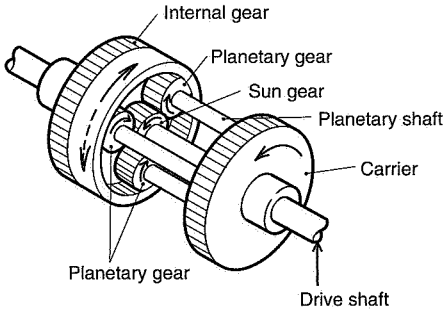

Figure 3-11

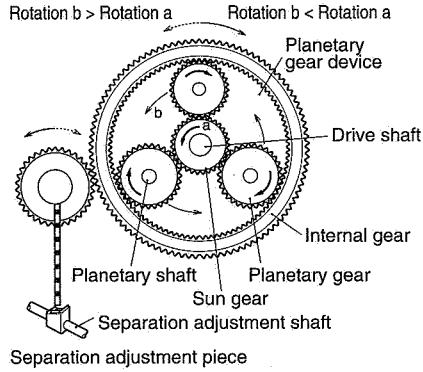

Figure 3-12

2. At Start of Pick-up

a. At start of pick-up, first the pick-up clutch (CL1) goes ON. ①

b. Since, at start of pick-up, the document has not been conveyed to the feed roller section, there is no load on the feed roller, and so the drive power from the main motor is transmitted to the feed roller and they rotate. ② → ③ → ④

c. The drive transmitted to the feed roller is transmitted to the carrier and turns the planetary gears of the planetary gear device. ④ → ⑤ → ⑥ → ⑦

d. On the other hand, the rotation of the sun gear of the planetary gear device is transmitted to the planetary gears and turns the internal gear. ⓐ → ⓑ

e. However, since there is no load acting on the feed roller, the rotation speed of the feed roller → carrier that is transmitted to the internal gear of the planetary gear device, is faster than the rotation speed from the planetary gears, so the internal gear turns in counterclockwise direction. ⑦

f. The rotation of the planetary gear device is transmitted to the separation adjustment gear, moving the separation adjustment shaft to the right. ⑧ → ⑨ → ⑩ → ⑪

g. Due to that, the separation adjustment piece moves to the right so that the feed roller descends to the bottommost end. ⑫

h. By descending the feed roller to the bottommost end, the space between the feed roller and the separation roller becomes minimum.

COPYRIGHT © 1996 CANON INC. CANON DR-3020 REV.0 FEB. 1996 PRINTED IN JAPAN (IMPRIME AU JAPON)

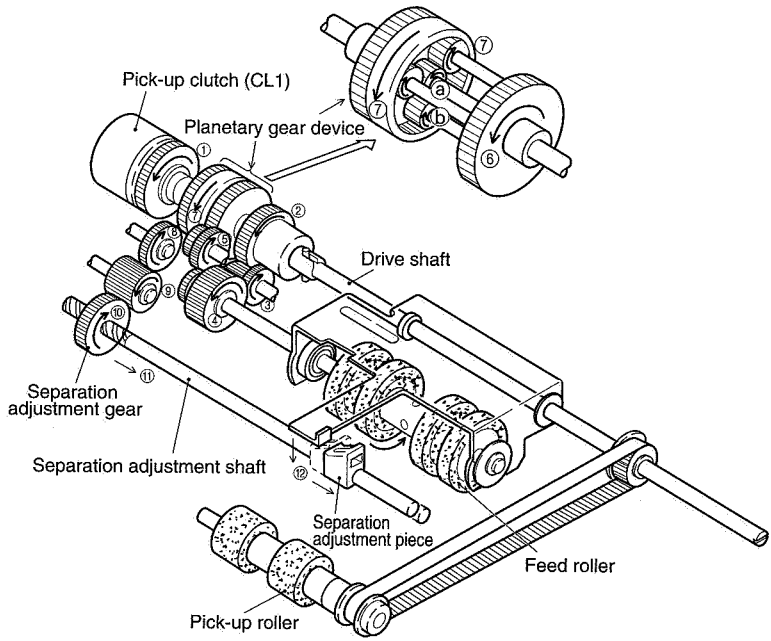

Figure 3-13

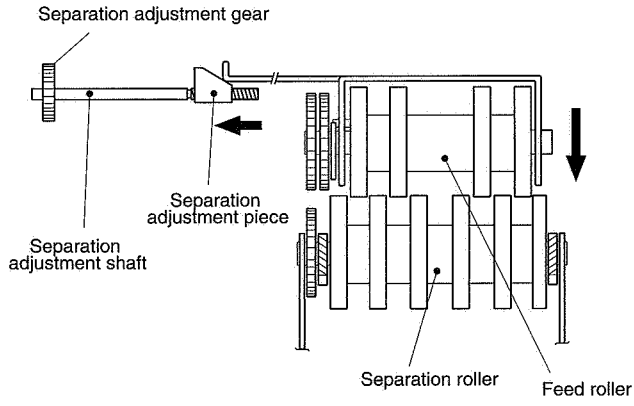

Figure 3-14

COPYRIGHT © 1996 CANON INC.

3. Document Pick-up

a. When the document, due to the rotation of the pick-up roller, is conveyed up to the feed roller section, it is not conveyed any further as the space between the feed roller and the separation roller is at its minimum.
b. Although the feed roller is rotating, there is a load on the feed roller because of the thrust of the document. ①
c. The feed roller stops when its load becomes greater than the value set by the torque limiter. ② → ③ → ④
d. Because the rotation of the feed roller stops, the rotating drive to the carrier of the planetary gear device stops. ⑤
e. Therefore, the drive to the planetary gears themselves also stops.
f. On the other hand, since the drive of the sun gear is always in rotation, the planetary gears rotate. ⓐ
g. As the drive transmitted to the internal gear of the planetary gear device rotates through of the sun gear planetary gears, the internal gear begins to rotate in the clockwise direction. ⓐ → ⓑ
h. Reverse rotation is transmitted to the separation adjustment gear and the separation adjustment shaft moves to the left. ⑧ → ⑨ → ⑩ → ⑪
i. Due to that, the separation adjustment piece now moves to the left, and the feed roller starts to rise. ⑫
j. The space between the feed roller and separation roller begins to widen and when the space becomes equal to the thickness of the document, the document is fed.
k. When the thickness of the second and subsequent documents is the same as the first document, the rotation of the internal gear of the planetary is stopped as the load on the feed roller is uniform.
l. Therefore, the separation adjustment shaft does not rotate, the adjustment piece too stops, and the documents are fed at all times.

COPYRIGHT © 1996 CANON INC. CANON DR-3020 REV.0 FEB. 1996 PRINTED IN JAPAN (IMPRIME AU JAPON)

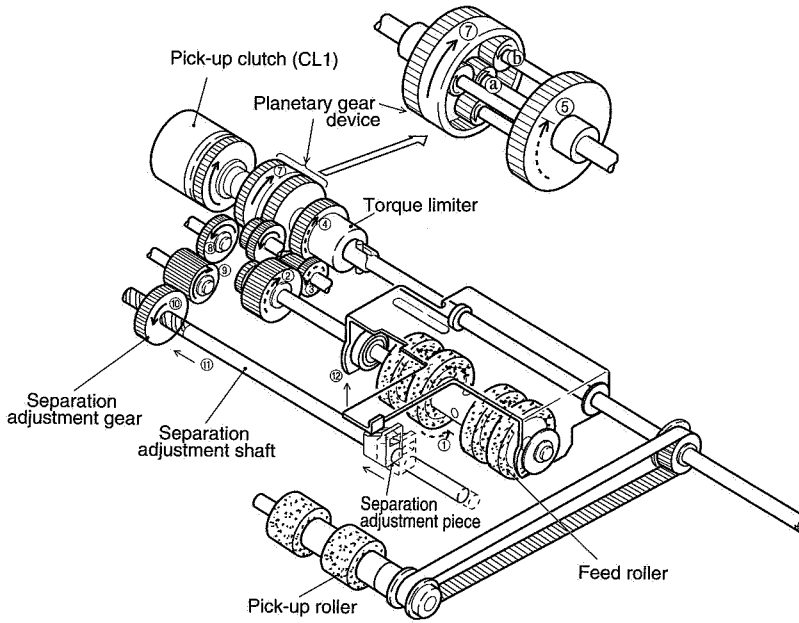

Figure 3-15

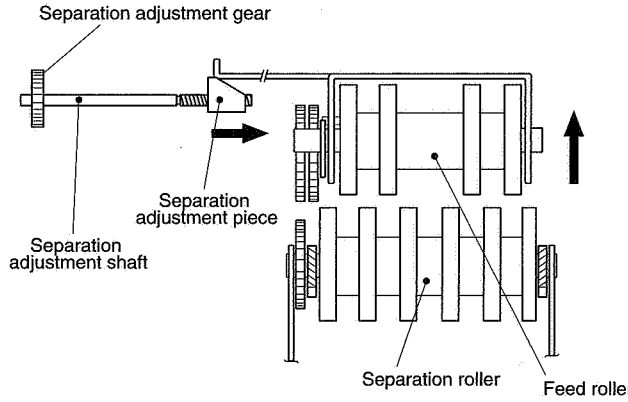

Figure 3-16

COPYRIGHT © 1996 CANON INC.

4. Pick-up Action Due to change in Document Thickness

- When the document thickness becomes thinner.

a. The load on the feed roller becomes smaller and the rotation of the feed roller becomes faster.

b. The rotation of the carrier of the planetary gear device becomes faster and the internal gear turns in the counterclockwise direction.

c. The separation adjustment gear rotates in reverse, the separation adjustment shaft moves to the right, the separation adjustment piece moves to the right, and the feed roller begins to descend.

- When the document thickness becomes thicker.

a. Action in reverse to that when the document thickness becomes thinner is taken.

COPYRIGHT © 1996 CANON INC.
CANON DR-3020 REV.0 FEB. 1996 PRINTED IN JAPAN (IMPRIME AU JAPON)

C. Detection of Faulty Document Feed

This machine has sensors installed in it to detect whether or not a document has been fed properly.

No.	Name of Sensor	Name of Signal
PS1	Document board sensor	PDP1
PS2	Registration sensor	PDP2
PS3	Scanning start sensor	PDP3
PS4	Delivery sensor	PDP4

Table 3-2

Judgment as to whether or not a document is fed properly is by whether or not the document is present in the sensor section at the check timing being output from the microprocessor.

COPYRIGHT © 1996 CANON INC.

1. Pick-up Assembly Jams

a. Pick-up Assembly Delay Jam

When the document, after passing the document board sensor (PS1), does not reach the registration sensor (PS2) within the specified time (T1).

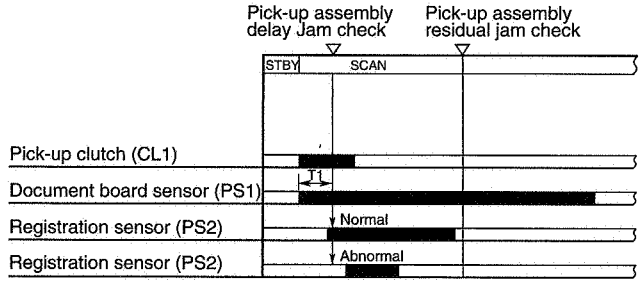

Figure 3-17

	Vertical Scanning Resolution		
	300LPI	200LPI	150LPI
T1	6000	4000	3000

Unit: ms

Table 3-3

COPYRIGHT © 1996 CANON INC. CANON DR-3020 REV.0 FEB. 1996 PRINTED IN JAPAN (IMPRIME AU JAPON)

2. Feeder Assembly Jams

a. Feeder Assembly Delay Jam

When the document, after passing the registration sensor (PS2), does not reach the scanning start sensor (PS3) within the specified time (T2).

b. Feeder Assembly Residual Jam

When the document, after passing the scanning start sensor (PS3), does not pass the scanning start sensor (PS3) within the specified time (T3).

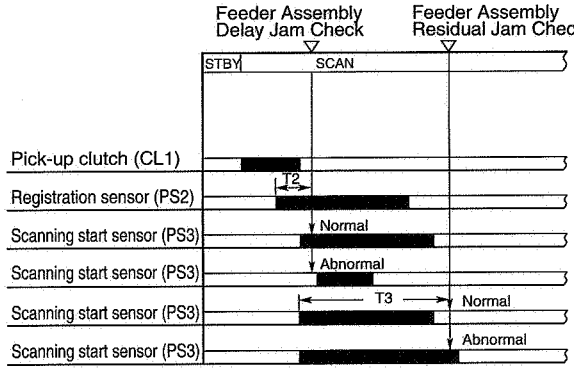

Figure 3-18

	Vertical Scanning Resolution		
	300LPI	200LPI	150LPI
T2	3000	2000	1500
T3	3423	2282	1712

Unit: ms

Table 3-4

COPYRIGHT © 1996 CANON INC.

3. Delivery Assembly Jams

a. Delivery Assembly Delay Jam

When the document, after passing the scanning start sensor (PS3), does not reach the delivery sensor (PS4) within the specified time (T4).

b. Delivery Assembly Residual Jam

When the document, after passing the delivery sensor (PS4), does not pass the delivery sensor (PS4) within the specified time (T5).

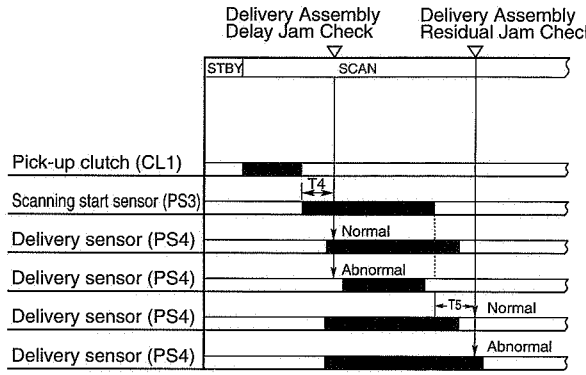

Figure 3-19

	Horizontal Scanning Resolution		
	300LPI	200LPI	150LPI
T4	1710	1140	855
T5	1710	1140	855

Unit: ms

Table 3-5

COPYRIGHT © 1996 CANON INC.

VII. HARDWARE CONFIGURATION

1. Outline

Figure 3-20 shows the configuration of the hardware of this machine.

The bus line of the CPU is connected to the gate array, RAM, and CPU shown in Figure 3-20 below.

BASIS-CHIP	: Multi-image processing controller
NOAH-CHIP	: Binarizing image controller
IF III-CHIP	: Binary image controller (IF: Image Flow)
SPC-CHIP	: SCSI Protocol controller (SPC: SCSI Protocol)
SORAMAME-CHIP	: Encoded image data transmission controller (SORAMAME: SCSI Operating Replay and Memory Access Management Engine)
ENC-CHIP	: Encoding controller (ENC: Encode)

COPYRIGHT © 1996 CANON INC.
CANON DR-3020 REV.0 FEB. 1996 PRINTED IN JAPAN (IMPRIME AU JAPON)

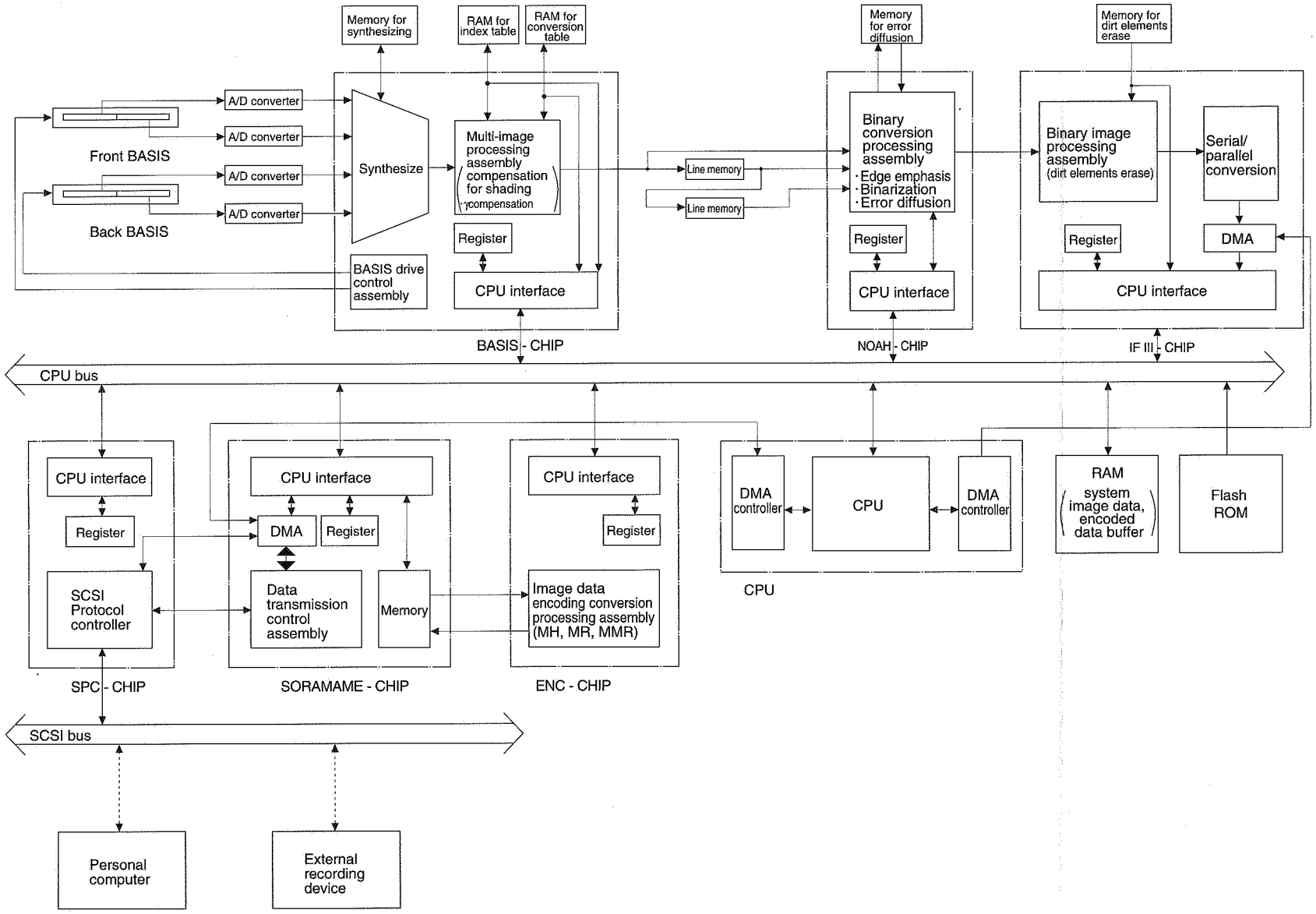

Figure 3-20

COPYRIGHT © 1996 CANON INC.

VIII. FLOW OF IMAGE DATA

A. Outline

Figure 3-21 is a block diagram showing the flow of image data in this machine.

The CPU controls the flow of image signals by setting each register.

Signals from BASIS are output by being divided into the former half and the latter half.

Electrical signals (analog) which are proportional to the density of each picture element are transmitted serially from BASIS. These signals are first converted by the A/D converter to digital signals of a level proportional to the density.

Subsequently, the data transmission speed is converted from 2.5 Mbit/second to 10 Mbit/second in the data transmission speed conversion memory.

Next, the front/back and the former half and latter half data of each BASIS are made composite by the multi serial circuit.

The composite 6-bit digital signals are subjected to compensation for shading and γ compensation through the multivalue image processing circuit.

They are further subjected to edge emphasis and error diffusion processing by the binarizing circuit and converted into binary signals.

The binarized image data are subjected to dust picture element erasure (when dust picture element erase function is selected) by the binary image processing circuit. Also, when the scan resolution is 300 dpi or less, thinning out is done in accordance with the resolution.

Every 16 bits of the binarized image data that have been subjected to various image processing is converted to parallel signals by the serial/parallel converter and stored each time in image memory through DMA transmission.

When the image data is to be encoded, they are subjected to encoding by the image encoding circuit, accumulated in the image data buffer memory, and transmitted by DMA transmission again to the SCSI bus via the SCSI control circuit.

On the other hand, when the image data are not to be encoded, they are transmitted directly from image memory by DMA transmission to the SCSI bus via the SCSI control circuit.

The image data that have been transmitted to the SCSI bus are sent to an external recording device via the personal computer and recorded in the external recording medium.

COPYRIGHT © 1996 CANON INC.

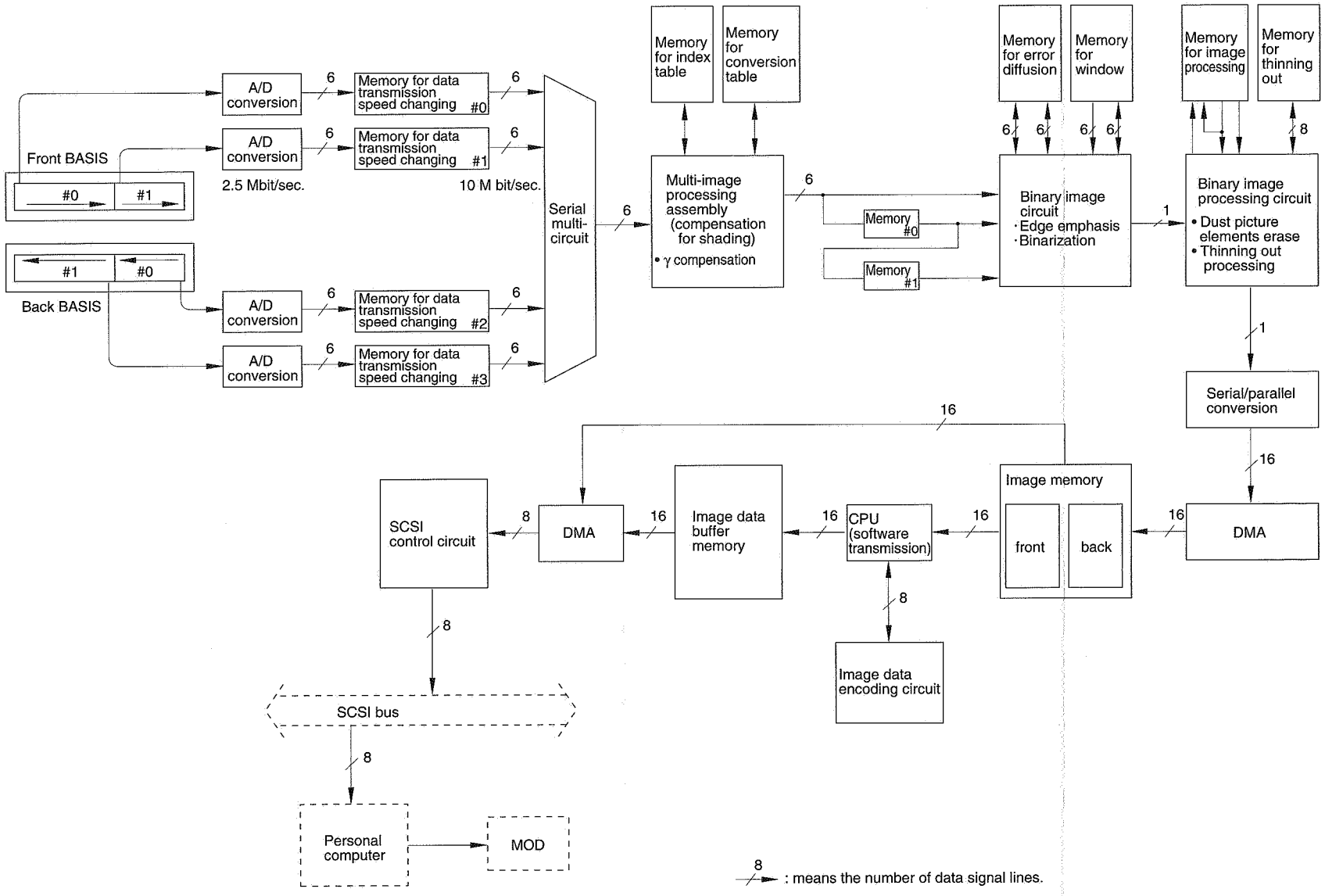

Figure 3-21

COPYRIGHT © 1996 CANON INC.

B. Flow of Image Data

1. Signals from BASIS

This machine has two BASIS which respectively read the images on the front and back sides of the document.

These BASIS are offset by 6 mm to prevent the image on the back side of the document from being read through to the front side.

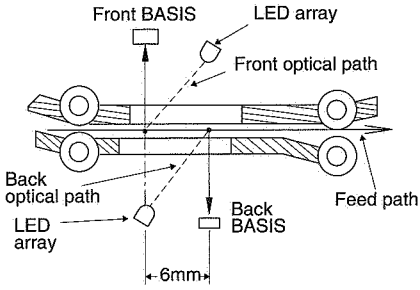

Figure 3-22

In order to speed up the scanning of image data, the former half and latter half of BASIS separately and, moreover, simultaneously read the image. (Figure 3-23)

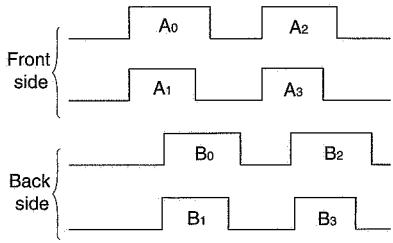

Figure 3-23

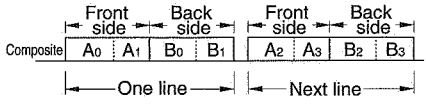

Figure 3-24

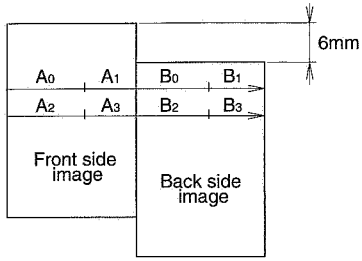

Figure 3-25

Image signals of the former half and latter half of the front side and back side are respectively converted by an A/D converter from analog signals to digital signals.

The image of the front side and back side in one line is made composite. (Figure 3-24)

The composite digital signals are subjected to shading compensation and γ compensation image processing at the multivalue image processing circuit.

This image processing is carried out by a conversion table RAM with a capacity of 8 kbits.

The digital signals output from the multivalue image processing circuit become white and black binarized signals in an image binarizing circuit based on the density processing level (slice level) used during recording.

The binarized signals undergo dust picture element erasure by a dust picture element erase memory with a capacity of 64 kbits.

A detailed explanation is given here from the time the image data are accumulated in image memory until they are output to the SCSI bus.

The flow of image data is shown in Figure 3-26.

The serial/parallel converted 16-bit image data are DMA transmitted via the CPU bus, encoded by the image encoding controller (ENC-CHIP), and stored in the memory of the encoded image data transmission controller (SORAMAME-CHIP).

COPYRIGHT © 1996 CANON INC.

When encoded image data are sent out as they are to the SCSI bus, the following processing is carried out as the data occupies the whole SCSI. When the memory of this encoded image data transmission controller (SORAMAME-CHIP) becomes full, the data is stored each time in the encoded image buffer zone of the buffer memory (DRAM).

When a certain amount of data is accumulated in the encoded image buffer zone, the data is DMA-transmitted again, via the SCSI controller zone of the encoded image data transmission controller (SORAMAME-CHIP), to the SCSI protocol controller (SPC-CHIP).

Subsequently, the data is transmitted to the SCSI bus.

Also, when the slow-processing personal computer is used, since the transmission speed to the personal computer, compared to the image data input, becomes slow, the following processing is carried out.

The image is not transmitted to the image encoding controller (ENC-CHIP), but is stored temporarily in the raw image buffer zone of the buffer memory (DRAM). The feeding of documents is then stopped and the data is transmitted to the image encoding controller (ENC-CHIP).

As soon as there is no data in the buffer memory (DRAM), the feeding of documents is resumed and the above processing is repeated.

The processing of image data encoded by the image encoding controller (ENC-CHIP) is the same as normal processing.

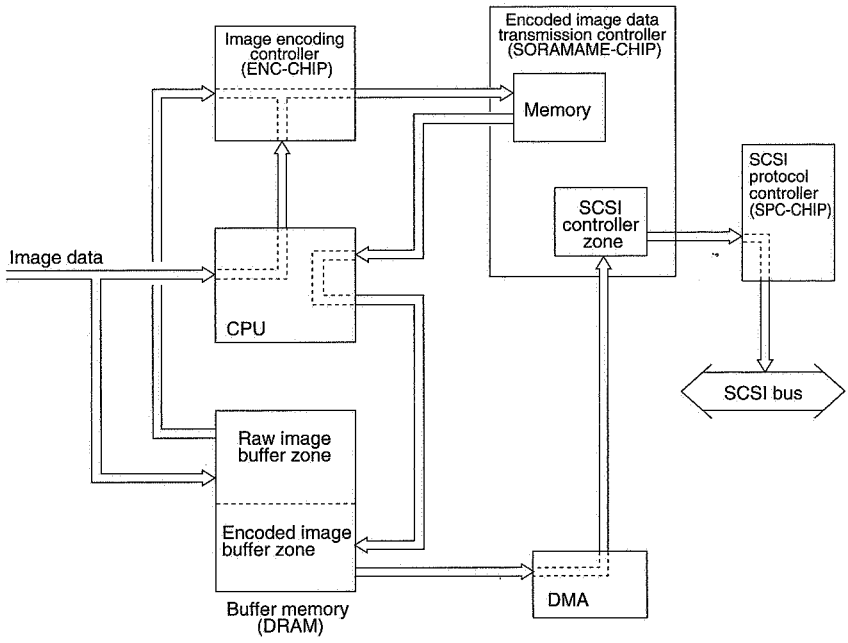

Figure 3-26

COPYRIGHT © 1996 CANON INC.
CANON DR-3020 REV.0 FEB. 1996 PRINTED IN JAPAN (IMPRIME AU JAPON)

C. DMA

DMA is an abbreviation for Direct Memory Access. It refers to the operation whereby data is transmitted directly between the memory and peripheral devices without going via the CPU.

When data from a peripheral device is to be written to the memory using commands from the CPU, the write operation takes place according to the read and memory write procedure. In the case of DMA-transmission, the data is transmitted directly from the peripheral device to the memory, enabling the process to take place is less time.

When such a DMA operation is carried out, address output to the memory, selection of peripheral devices, and system bus control of the read and write output, etc., take place in a circuit called a DMA controller which is separate from the CPU.

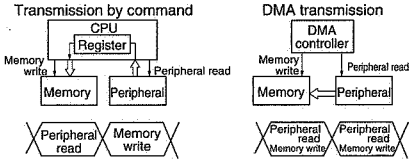

Figure 3-27

IX. DESCRIPTION OF ELECTRICAL CIRCUITS

A. Outline

Figure 3-28 shows the block diagram of the CPU circuit based on the flow of image data.

A series of the analog signal output from the BASIS and output to external devices through the image processor is shown.

The block diagram indicates the main functions of the machine in units of devices.

The ☐ in the frame indicates the name of the device used in each gate array.

1. Description of Operation of Block Diagram

The electrical signals input serially from the BASIS are first amplified and A/D-converted by the A/D converter, then input as 6-bit digital signals to the multivalue image controller (BASIS-CHIP), where four digital signals are composed via the composing RAM.

The white picture element data is arithmetically processed in the multivalue image controller, and then stored in the conversion table RAM, in preparation compensation for shading. The conversion table RAM contains the compensation data table which is used to compensate for the level of each BASIS. Thus, during image readout, the BASIS signal is first compensated and before being set as output to convert the resolution in the horizontal scanning direction.

The shading-compensated 6-bit image signals output from the multivalue image controller (BASIS-CHIP) are input to the image binarizing controller (NOAH-CHIP).

These image signals undergo edge emphasis and error diffusion process in the vertical scan direction using two line memories, and are binarized.

The image signals binarized in the image binarizing controller (NOAH-CHIP) are input to the binary image controller (IF III-CHIP).

In the binary image processing controller, dust picture element erase takes place.

The image signals output from the binary image processing controller are encoded in the image data encoding controller (ENC-CHIP).

The 8-bit image data output from the image data encoder controller (ENC-CHIP) is transmitted to external devices via the SCSI controller (SPC-CHIP) by the compressed image data transmission controller (SORAMAME-CHIP).

The compressed image data transmission controller (SORAMAME-CHIP) performs DMA transmission via buffer memory.

COPYRIGHT © 1996 CANON INC.
CANON DR-3020 REV.0 FEB. 1996 PRINTED IN JAPAN (IMPRIME AU JAPON)

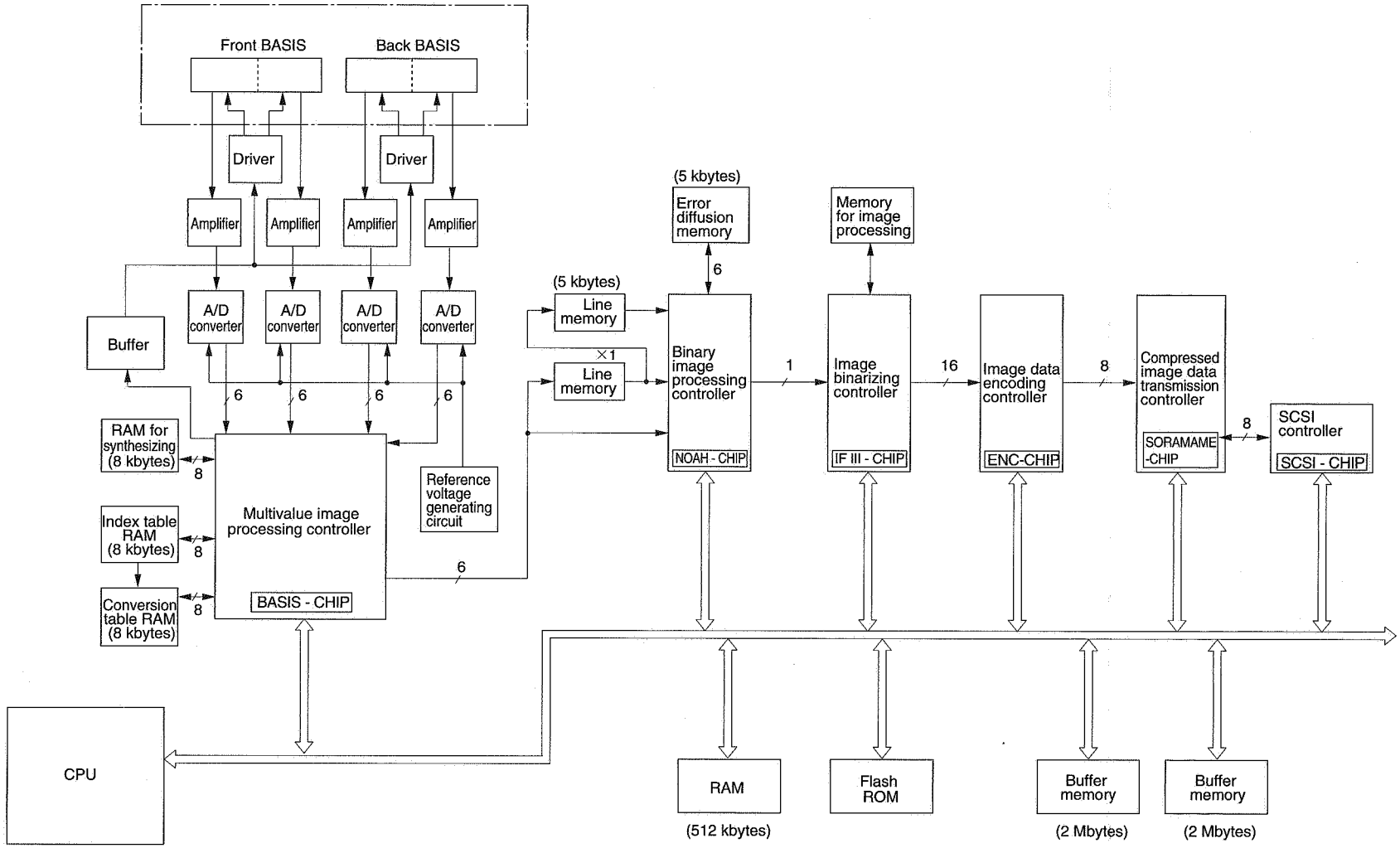

Figure 3-28

COPYRIGHT © 1996 CANON INC.

B. CPU Circuit

Figure 3-29 shows the block diagram of the CPU PCB.

The control of this machine is performed by a 32-bit microprocessor of the IC115 single chip RISC.

A Flash ROM (IC112:4 Mbit) is connected to the CPU.

Also connected to the CPU are the following elements whose roles are as follows.

- IC101: SPC-CHIP (SCSI protocol controller)
  This is the control gate array for SCSI interface.
- IC102: SORAMAME-CHIP (Encoded image data transmission controller)
  This is the control gate array for interfacing the interface with the image data encoding controller (IC107: ENC-CHIP) and with the SCSI protocol controller (IC101: SPC-CHIP).
- IC107: ENC-CHIP (Image data encoding controller)
  This is the gate array for encoding image data.
- IC117: IF III-CHIP (Binary image processing controller)
  This is the gate array for dust picture element erase image processing.
- IC111: NOAH-CHIP (Image binarizing controller)
  This is the gate array for carrying out edge emphasis and error diffusion.
- IC114: RAM
  This is the memory for error diffusion processing.
- IC116 and IC118: RAM
  These are memories for edge emphasis processing.
- IC104: BASIS-CHIP (BASIS controller)
  This is the gate array for driving BASIS shading compensation, and γ compensation.
- IC103, IC105, and IC108 (RAM)
  These are memories for making composites of the front and back sides of documents and for shading.
  IC103 is the RAM for combining the front and back side data, IC105 for the index table, and IC108 for the conversion table.
- IC112: RAM
  This is the flash ROM for working this machine and for writing various data.
- IC109 and IC113: DRAM
  These are buffer RAM's for transmitting image data.

COPYRIGHT © 1996 CANON INC.

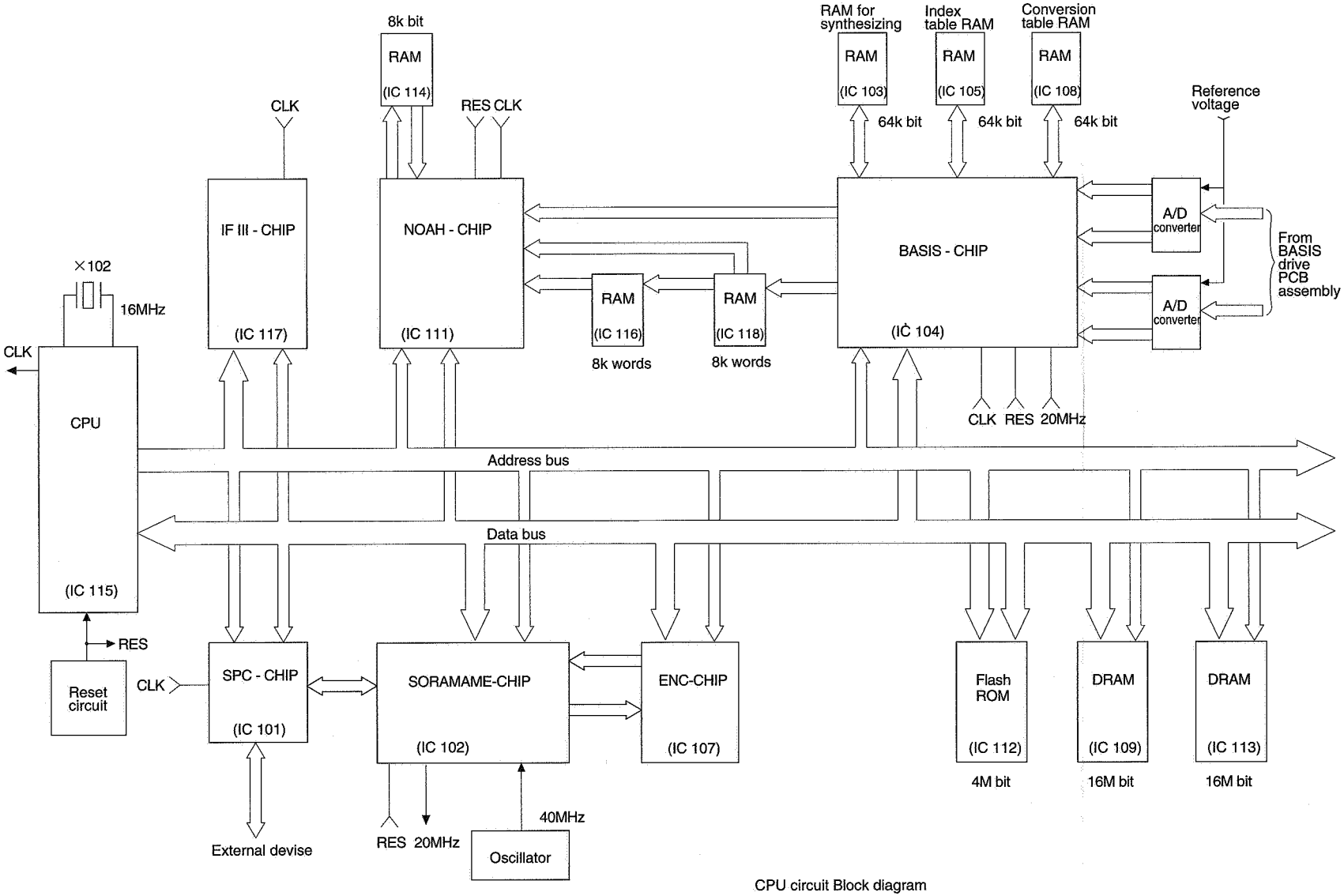

CPU circuit Block diagram

Figure 3-29

COPYRIGHT © 1996 CANON INC.

C. BASIS Drive Circuit

1. Outline

The circuit shown in Figure 3-30 amplifies the voltage (analog) corresponding to each picture element output from the BASIS, combines the front image signal with the back image signal and converts the resulting signal into a 6-bit digital signal.

2. BASIS Operation

The BASIS (Base Stored Image Sensor) used in this machine has 3042 picture element bits and consists of a photosensitive assembly, transmitter assembly, and output assembly.

The BASIS is constructed so that it is divided into former and latter blocks in the ratio of 7:6.

The BASIS consists of 13 chips. Each chip has 234 sensors (phototransistors) arranged in it.

The first nine bits of the left end chip 1 and the last nine bits of the right end chip 13 of the BASIS are dummy bits and not used.

The total number of sensors in the BASIS is:

13 (No. of chips) x 234 (No. of bits per chip) - 18 (sensors not being used) = 3024 (pieces).

Resolution is:

3024 ÷ 257 (width: mm) = 11.8 (lines/mm) = Approx. 300 DPI

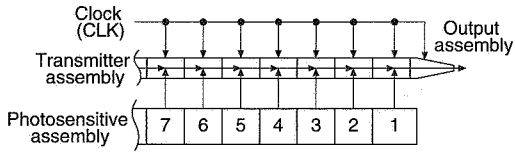

Figure 3-30

① Construction of BASIS

Figure 3-17 (3-31) shows the construction of BASIS

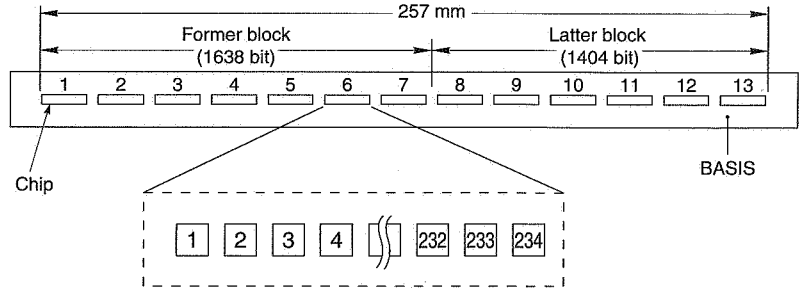

Figure 3-31

COPYRIGHT © 1996 CANON INC.

Figure 3-32 is the block diagram of the BASIS drive circuit.

Two BASIS are used, one for reading the front side of documents and the other, the back side.

In order to read documents at high speed, the BASIS read the former and latter blocks simultaneously.

The analog voltage of the former block (10 - 1638 bits) and the analog voltage of the latter block (1639 - 3024 bits) are output respectively as Vout1 and Vout2 to the CPU PCB.

Clock signals (FSP and BSP) are input into BASIS.

The analog signals output from BASIS are amplified by amplifiers and are converted by 6-bit A/D converters into 6-bit digital signal.

After that, shading compensation is carried out at the multivalue image processing assembly.

- BASIS transmitter assembly

When SP signal becomes ON, the potential held at the preceding time synchronizes with CLK and is transmitted successively to the output assembly.

(Analog shift register)

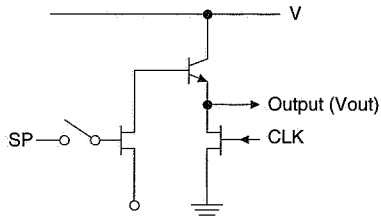

Figure 3-33

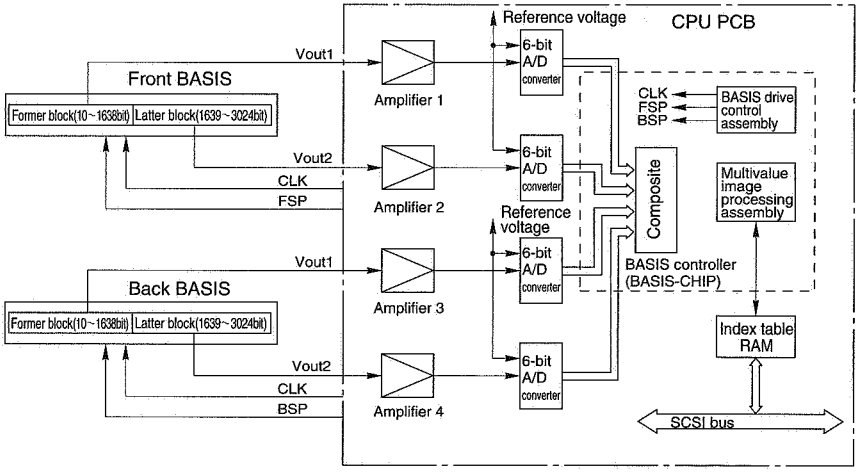

Figure 3-32

COPYRIGHT © 1996 CANON INC. CANON DR-3020 REV.0 FEB. 1996 PRINTED IN JAPAN (IMPRIME AU JAPON)

Figure 3-34 is the timing chart of the operation of BASIS.

SP is the line interval signal indicating a one line interval.

CLK is the BASIS drive clock and operates at 1.25 MHz.

Vout1 indicates the output of the former block and Vout2, the output of the latter block of BASIS.

The intervals between CLK signal pulses 1 - 26 of the Vout1 output are the clamp intervals (52 bits). The intervals between pulses 27 - 31 are the dummy bits (9 bits), and are invalid bits (1 - 9 bits) of BASIS.

The intervals between CLK signal pulses 31 - 851 are the valid bits of BASIS and the 10th bit to the 1629th bit are output as image signals (S1 - S1629).

In the same manner, the intervals between CLK signal pulses 1 - 26 of the Vout2 output are the clamp intervals (52 bits).

The intervals between pulses 27 - 671 are the valid bits of the latter block of BASIS and the 1639th bit to the 3024th bit are output as image signals (S1630 - S3024).

The intervals between CLK signal pulses 671 - 676 are the invalid bits of the back end of BASIS.

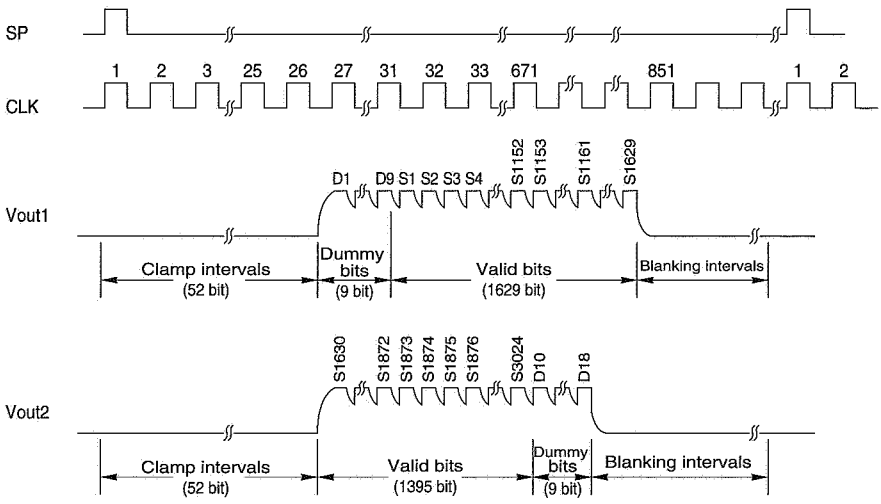

Figure 3-34

COPYRIGHT © 1996 CANON INC.

D. Multivalue Image Processing Control (BASIS-CHIP) Circuit

1. Outline

This circuit has the following functions.

- It generates the drive timing signals for the two BASIS which read the front and back sides of the document.
- It controls access to the index table RAM and the conversion table RAM from the BASIS side and the CPU side at shading compensation.

2. Explanation of Operation

Figure 3-35 is a block diagram of the multivalue image processing controller (BASIS-CHIP).

Figure 3-36 is the timing chart of image data read by BASIS.

The former and latter block of the front side/back side of BASIS are read simultaneously.

The read timing of the back side starts a half line after the reading of the front side.

The data read from the front and back sides, after being converted by A/D converters into digital signals, are combined at the data speed conversion assembly/combining assembly.

Also data input at a transmission speed of 2.5 Mbit/second are converted to 10 Mbit/second.

After that, shading compensation is done by the shading compensation assembly and the data is output to the binarizing controller (NOAH-CHIP).

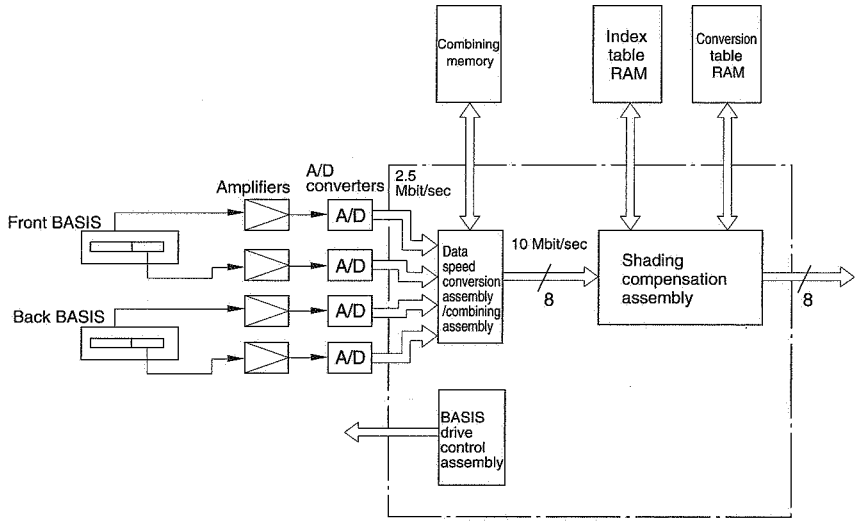

Figure 3-35

COPYRIGHT © 1996 CANON INC. CANON DR-3020 REV.0 FEB. 1996 PRINTED IN JAPAN (IMPRIME AU JAPON)

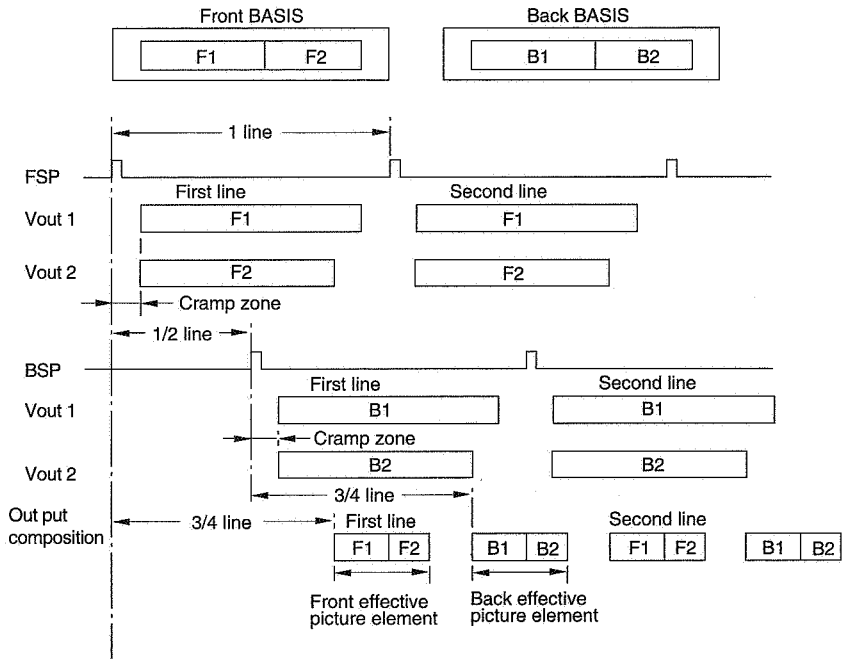

Figure 3-36

COPYRIGHT © 1996 CANON INC.

E. Image Binarizing Controller (NOAH-CHIP) Circuit

1. Outline

This circuit binarizes the 8-bit image data that is output from the multivalue image processing controller (BASIS-CHIP) by carrying out the following image processing.

- Edge Emphasizing
  Emphasizes the differences in light and dark areas in order to reproduce the image distinctly.
- Error Diffusion
  Reproduces the halftones of photographs, etc.

2. Explanation of circuit

Figure 3-37 shows an outline of the circuit of the image binarizing controller (NOAH-CHIP).

The 8-bit image data that is output from the multivalue image processing controller (BASIS-CHIP) is input to the image binarizing controller (NOAH-CHIP) via two line memories.

Edge emphasizing is performed with this signal.

Memory #2 is used for error diffusion processing.

The data is image-processed, and then binarized and output.

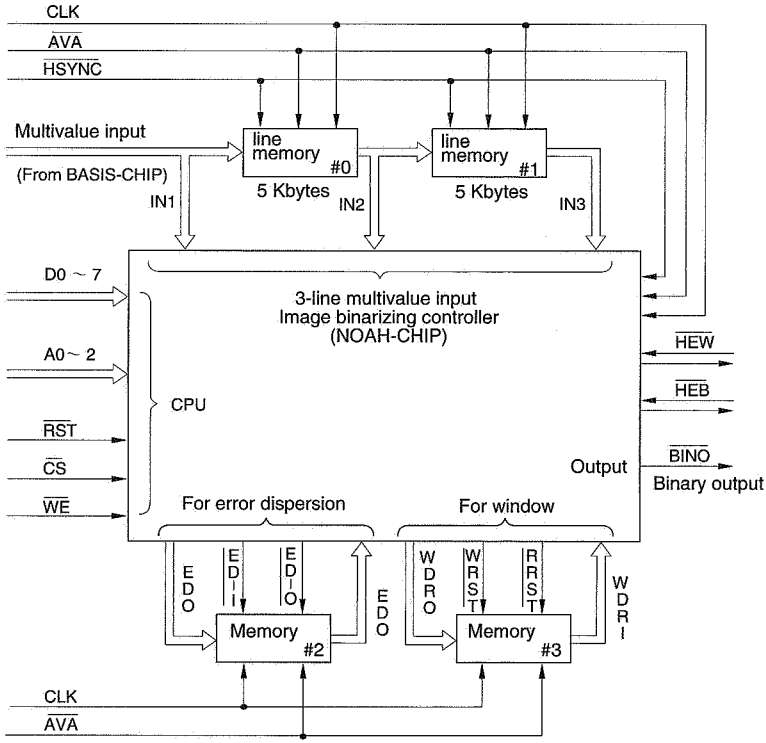

Figure 3-37

COPYRIGHT © 1996 CANON INC.
CANON DR-3020 REV.0 FEB. 1996 PRINTED IN JAPAN (IMPRIME AU JAPON)

The following gives the names of signals and their meanings.

- $\overline{CLK}$: Reference clock
- $\overline{PAG}$: Interval signal indicating the length of 1 page of the document.
- $\overline{HSYNC}$: Horizontal synchronizing signal.
- $\overline{AVA}$: IC operation control signal.
- $\overline{F/B}$: Input front/back (threshold value) switching signal.
- $\overline{HEW}$: Indicates the effective interval of the input image.
- $\overline{HEB}$: Indicates the effective interval of the input image.
- INx : Input image bus of 8 bits x 3 lines. Line in which IN 1 is first processed.
- $\overline{BINO}$: Binary image output data.
- DLIx : General purpose input signal for synchronizing delay.
- DLOx : General purpose output for synchronizing delay.
- $\overline{PAGO}$, $\overline{HYSNCO}$, $\overline{F/BO}$, $\overline{HEWO}$, $\overline{HEBO}$: Signals that delay the respective input signals by 20 clocks.
- EDI : Error data input from the error diffusion memory.
- EDO : Error data output from the error diffusion memory.
- WDRI : Binary data input from the windows memory.
- WDRO : Binary data output from the windows memory.
- $\overline{ED\_O}$: Read reset of error diffusion memory.
- $\overline{ED\_I}$: Write reset of error diffusion memory.
- $\overline{WRST}$: Write reset of Windows memory.
- $\overline{RRST}$: Read reset of Windows memory.
- A : Internal register selection address.
- D : CPU data bus.
- $\overline{CS}$: Chip select signal.
- $\overline{WE}$: Write enable signal.
- $\overline{RST}$: Reset signal.
- Tx : IC text signal.

COPYRIGHT © 1996 CANON INC.

F. Binary Image Processing Controller (IF III-CHIP) Circuit

1. Outline

The binary image processing controller (IF III-CHIP) performs the following processing on image data binarized by the image binarizing controller (NOAH-CHIP).

- Dust picture element erasure
- Serial/parallel conversion
- Thinning out of picture elements

2. Processing Details

a. Performs the following processing on image signals input from each device.

- Dust picture element erasure

It treats independent and isolated picture element data in the input image data as dust picture elements (image noise) and forcibly converts them into "background" picture elements.

This function is mainly to make it easier to see a binarized image of a soiled document or background as many fine dots and also to reduce the lowering of the encoding rate of the image data.

- Thinning out of picture elements

This function is to thin out picture elements in accordance with the resolution and to reduce the size.

b. Converts image-processed binarized data into 16-bit parallel signals in order to transmit them to the image buffer memory at high speed.

3. Explanation of Circuit

Figure 3-38 is a block diagram of the binary image processing controller (IF III-CHIP).

Although the input selector is shown as a circuit which selects one signal system from four, actually it supports only one system.

The auxiliary signal generation circuit generates the following signals.

- $\overline{\text{PAG}}$: Page interval signal
  Level signal indicating the valid interval (length of one page) of the document.
- $\overline{\text{HSYNC}}$: Horizontal synchronizing signal
  Pulse signal indicating the leading position of one scanned line of the image.

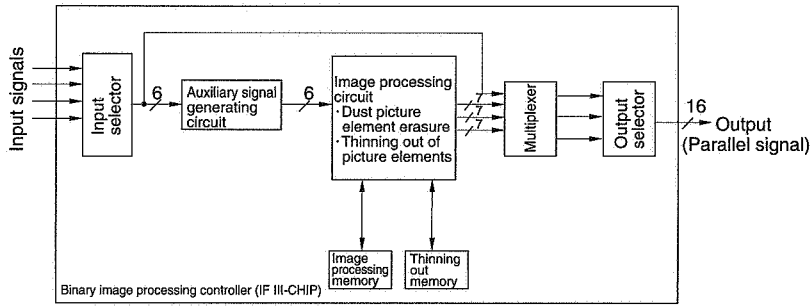

Figure 3-38

COPYRIGHT © 1996 CANON INC.
CANON DR-3020 REV.0 FEB. 1996 PRINTED IN JAPAN (IMPRIME AU JAPON)

- $\overline{AVA}$: Valid image interval signal
  Level signal indicating the interval of the valid picture element data in one scanned line.

- LN $\overline{F}$/B : Front side/back side designation signal
  Level signal indicating front/back interval of a double-sided document when the document is handled by combining the data as one scanned line. For a single sided document, the front is fixed at "0" and the back at "1."

Data is subjected to dust erasure and thinning out of picture elements by the image processing circuit and output as 16-bit parallel signals via the output selector.

COPYRIGHT © 1996 CANON INC. CANON DR-3020 REV.0 FEB. 1996 PRINTED IN JAPAN (IMPRIME AU JAPON)

G. Encoded Image Data Transmission Controller (SORAMAME-CHIP) Circuit

1. Outline

Figure 3-39 shows the block diagram of the encoded image data transmission controller (SORAMAME-CHIP) and the functions of the surrounding devices.

The encoded image data transmission controller (SORAMAME-CHIP) has the following functions.

- Interface between the CPU and the image date encoding controller (ENC-CHIP) in order to provide a high speed image data encoding operation.
- Interface between the CPU and the SCSI protocol controller (SPC-CHIP) in order to make it possible to give and take image data with the SCSI.

2. Explanation of Operation

The following is the flow of operation.

Note that the numbers in the figure correspond to those in this explanation.

① The CPU reads the image data from memory 1 and writes that data in the input register memory in the encoded image data transmission controller (SORAMAME-CHIP). The capacity of the memory is 7 words.

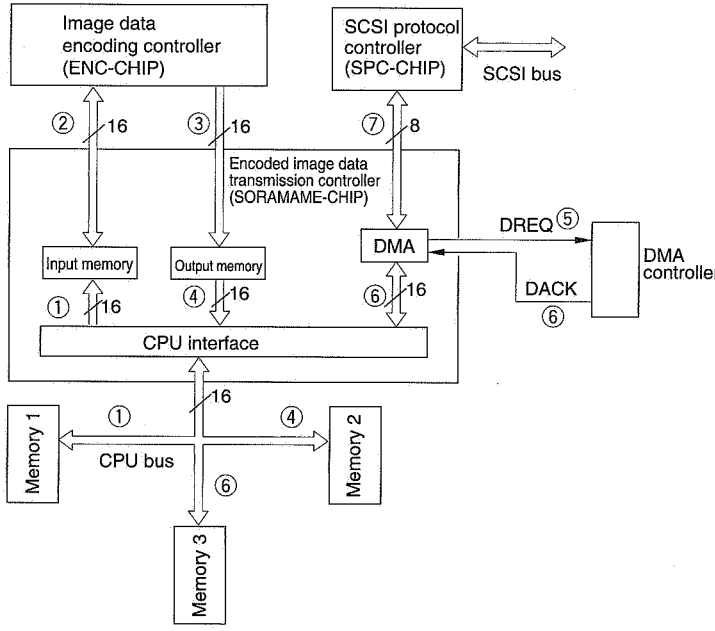

Figure 3-39

COPYRIGHT © 1996 CANON INC.
CANON DR-3020 REV.0 FEB. 1996 PRINTED IN JAPAN (IMPRIME AU JAPON)

② The data written in the input memory is transmitted to the image data encoding controller (ENC-CHIP) via a 16-bit bus specially provided for that purpose.

③ The image data encoded by the image data encoding controller (ENC-CHIP) is transmitted to the output memory in the encoded image data transmission controller (SORAMAME-CHIP) via a 16-bit bus specially provided for that purpose.
The capacity of this memory is 7 words.
When the memory becomes full, the encoded data transmission controller (SORAMAME-CHIP) stops transmitting.

④ The CPU reads the encoded data from the output memory register and writes that data in memory 2.
The foregoing ① - ④ is the interface function between the CPU and the image data encoding controller (ENC-CHIP).

⑤ When on DMA transmission, first DREQ (DMA transmission request) signals are sent from the encoded image data transmission controller (SORAMAME-CHIP) to the DMA (DMA controller).

⑥ DACK (DMA request acknowledgment) signals are returned from DMA, and image data is then transmitted by the DMA controller from memory 3, via the CPU bus, to the encoded image data transmission controller (SORAMAME-CHIP).

⑦ Image data is transmitted from the encoded image data transmission controller (SORAMAME-CHIP) to the SCSI protocol controller (SPC-CHIP) via an 8-bit bus specially provided for that purpose.

The foregoing ⑤ - ⑦ is the interface function between the CPU and the SCSI protocol controller (SPC-CHIP).

COPYRIGHT © 1996 CANON INC.

H. Main Motor Driver Circuit

1. Outline

Figure 3-40 shows an outline of the motor driver circuit.

The main motor is a DC motor.

The main motor is rotated at three different speeds, or high speed, medium speed, and low speed by combining two signals, SPEED A and SPEED B.

If the motor should stop because of abnormality, M. LOCK signal becomes "H," transmitting an abnormal signal to the CPU to stop the motor automatically.

Rotation	SPEED A	SPEED B	Rotating speed	Feed speed
Low speed	H	H	144rpm	121.0 mm/sec.
Medium speed	L	L	216rpm	181.4 mm/sec.
High speed	H	L	288rpm	241.9 mm/sec.

Table 3-6

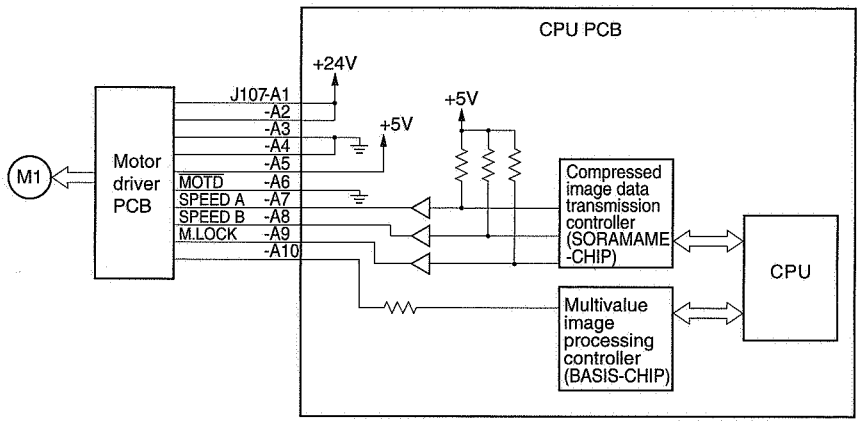

Figure 3-40

COPYRIGHT © 1996 CANON INC. CANON DR-3020 REV.0 FEB. 1996 PRINTED IN JAPAN (IMPRIME AU JAPON)

X. INTERFACE

A. Outline

This machine has a kind of interface shown in Figure 3-41.

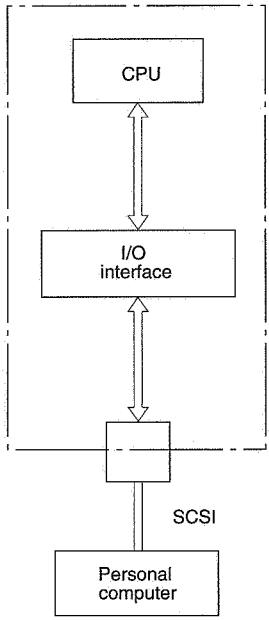

The SCSI interface communicates with personal computers.

Figure 3-41

1. Outline of Interfaces

When data is transmitted from the this machine to an external device, it passes through an interface. The cable used then is called an interface cable, and the cable connector between this machine and the external device is called an interface connector.

COPYRIGHT © 1996 CANON INC.

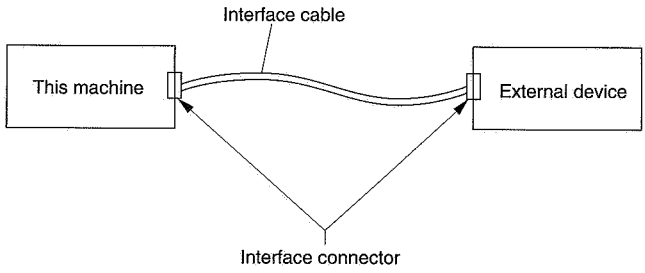

Figure 3-42

Data is transmitted between this machine and an external device via this interface cable. A set of rules is necessary to transmit data between these two different kinds of hardware.

This set of rules comprises a standard which covers the meaning and transmission procedure of the signals to be transmitted (data and control signals) (protocol: communications rules), and also the hardware. It is necessary for both sides to conform to the same standard.

Interfaces can be broadly divided into parallel interfaces and serial interfaces.

A commonly used parallel interface is the Centronics interface. Other parallel interfaces include GPIB and SCSI.

While, serial interfaces include RS232C, RS422, RS499 and the TTY interface.

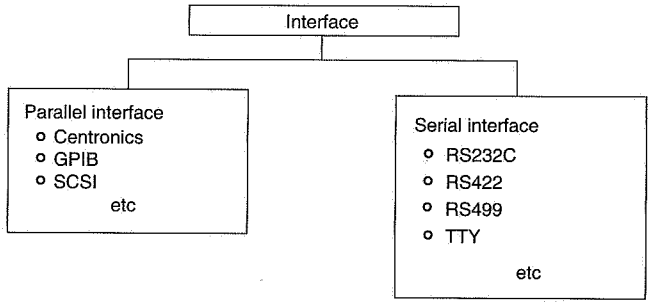

Figure 3-43

2. Parallel interfaces

When sending parallel data, one byte (1 character) of data can be sent at one time.

A dedicated line is assigned to each bit, and the bits are sent in parallel with each other.

COPYRIGHT © 1996 CANON INC. CANON DR-3020 REV.0 FEB. 1996 PRINTED IN JAPAN (IMPRIME AU JAPON)

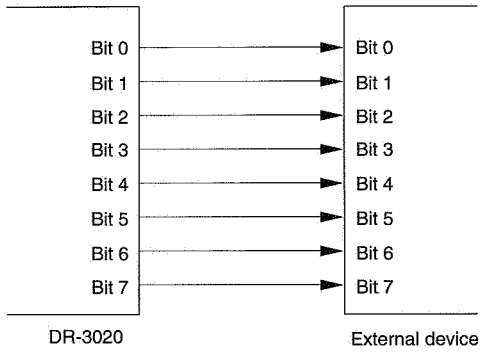

Figure 3-44

This parallel data is not suitable for transmission over long distances. Generally, the shorter the line, the faster the data can be transmitted.

Note: When parallel data is sent over a long distance, radio frequency interference (RFI) causes a problem, and the data signals themselves become very weak during transmission.

Parallel interfaces include the Centronics interface, GPIB(Note), and SCSI. Of these, GPIB and SCSI have too many functions to make them suitable as a printer interface, hence they are not commonly used. This section describes the Centronics interface.

Note: GPIB (General Purpose Interface Bus) is an interface bus specification standardized as IEEE-488-1975 by IEEE (The Institute of Electrical and Electronics Engineerings).

Because of this standard number, GPIB is sometimes referred to as IEEE488. Table 3-7 shows the maximum ratings of GPIB.

Item	Maximum Value
Total length of cable	20 m
Cable length between devices	5 m
Transmission speed	1 Mbyte/sec
Number of units connected	15 sets

Table 3-7

COPYRIGHT © 1996 CANON INC.

3. Serial Interfaces

In serial data transmission, one byte of data is transmitted using one signal line per one bit at a time. Figure 3-45 shows an example of transmitting two bytes of data.

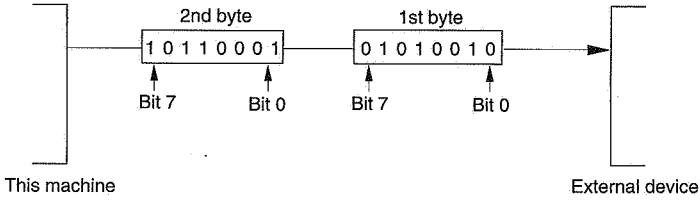

Figure 3-45

Serial data transmission is not affected by distance, and is most generally used.

Serial interfaces include RS232C, RS422, RS499, TTY interface, etc. High speed features, RS422 and RS499. The TTY interface was formerly used for printer connection using the relay circuit but is no longer in common use.

COPYRIGHT © 1996 CANON INC. CANON DR-3020 REV.0 FEB. 1996 PRINTED IN JAPAN (IMPRIME AU JAPON)

B. SCSI Interface

1. Outline

SCSI is an abbreviation for Small Computer System Interface. It is a standard interface between a computer and a peripheral device.

An SCSI can be connected almost regardless of the kind of devices connected to the SCSI bus.

An SCSI permits a plurality of peripheral devices of as many as seven sets to be connected to the logical bus.

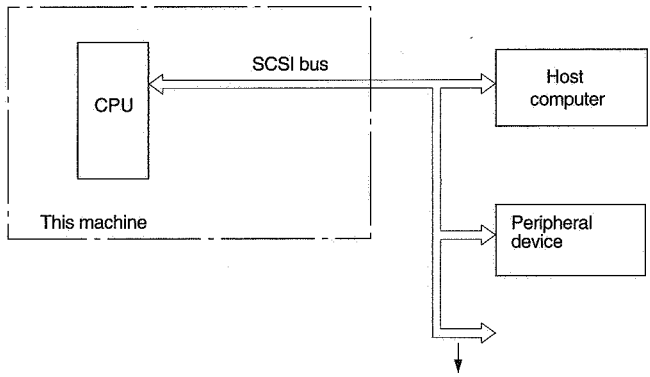

Figure 3-46

COPYRIGHT © 1996 CANON INC.

Main signals used for data transmission

The main signals on the SCSI bus are shown in Table 3-8.

The SCSI bus consists of a total of 18 signal lines which consist of data signals (one byte + parity bits = nine signals) and control signals (nine signals).

Pin No.	Signal name	Input/output at CPU side	Meaning
26-34	DB7 - 0, DBP (Data Bus)	Input/output	This is a bidirectional data bus consisting of one byte of data and an odd parity bit. This data bus is used to transmit commands, data, statuses and messages in the data transmission phase. In the arbitration phase, it is also used to output an SCSI ID for judging the priority sequence of the right to use a bus. In addition, in the selection or re-selection phase, the SCSI ID for identifying the initiator and target is sent out.
43	BSY (BuSY)	Input/output	This signal indicates that the SCSI bus is being used. Also, in the arbitration phase, it indicates a request for the right to use the bus.
47	SEL (SELect)	Input/output	This signal indicates that the initiator selected the target (selection phase) or that the target re-selected the initiator (re-selection phase). Also, in the arbitration phase, it indicates that the right to use the bus has been successfully obtained.
48 50 46	C/D (Control/Data) I/O (Input/Output) MSG (MeSsaGe)	Input	The target specifies the kind of data to be transmitted on the data bus according to the particular combination of these three signals. The I/O signal is also used to identify the selection phase and the re-selection phase.
49	REQ (REQuest)	Input	This signal is sent from the target requesting the initiator to transmit data, in the data transmission phase.
44	ACK (ACKnowledge)	Output	This signal is sent from the initiator to the target in response to the REQ signal.

Table 3-8

COPYRIGHT © 1996 CANON INC. CANON DR-3020 REV.0 FEB. 1996 PRINTED IN JAPAN (IMPRIME AU JAPON)

Pin No.	Signal name	Input/output at CPU side	Meaning
41	ATN (ATeNtion)	Output	This signal indicates that the initiator has a message to be sent to the target.
45	RST (ReSeT)	Input/output	This signal instructs all SCSI devices on the bus to be reset.

Table 3-8

COPYRIGHT © 1996 CANON INC. CANON DR-3020 REV.0 FEB. 1996 PRINTED IN JAPAN (IMPRIME AU JAPON)

2. Data Transmission

The data input and output, and the signal name of the connector are shown below.

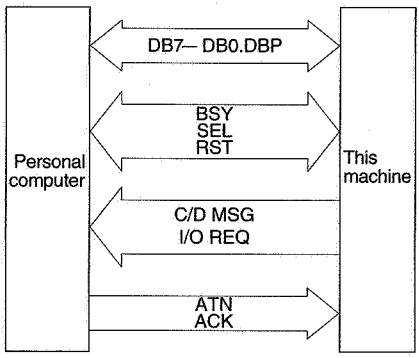

Figure 3-47

Pin NO.	Signal Name	Remarks
1-12	GND	(Ground)
13	Open	(Non-connection)
14-25	GND	(Ground)
26	-DBO	(Data Bit O)
27	-DB1	(Data Bit 1)
28	-DB2	(Data Bit 2)
29	-DB3	(Data Bit 3)
30	-DB4	(Data Bit 4)
31	-DB5	(Data Bit 5)
32	-DB6	(Data Bit 6)
33	-DB7	(Data Bit 7)
34	-DBP	(Odd Parity Data Bit)
35-37	GND	(Ground)
38	TERMPWR	(Termination Power)
39-40	GND	(Ground)
41	-ATN	(Attention)
42	GND	(Ground)
43	-BSY	(Busy)
44	-ACK	(Acknowledge)
45	-RST	(Reset)
46	-MSG	(Message)
47	-SEL	(Select)
48	-C/D	(Control/Data)
49	-REQ	(Request)
50	-I/O	(Input/Output)

The hyphen "—" in the signal name means a low active signal.

Table 3-9

COPYRIGHT © 1996 CANON INC.

3. Control Method

The basic procedure for drive control via the SCSI interface is as shown in Figure 3-48.

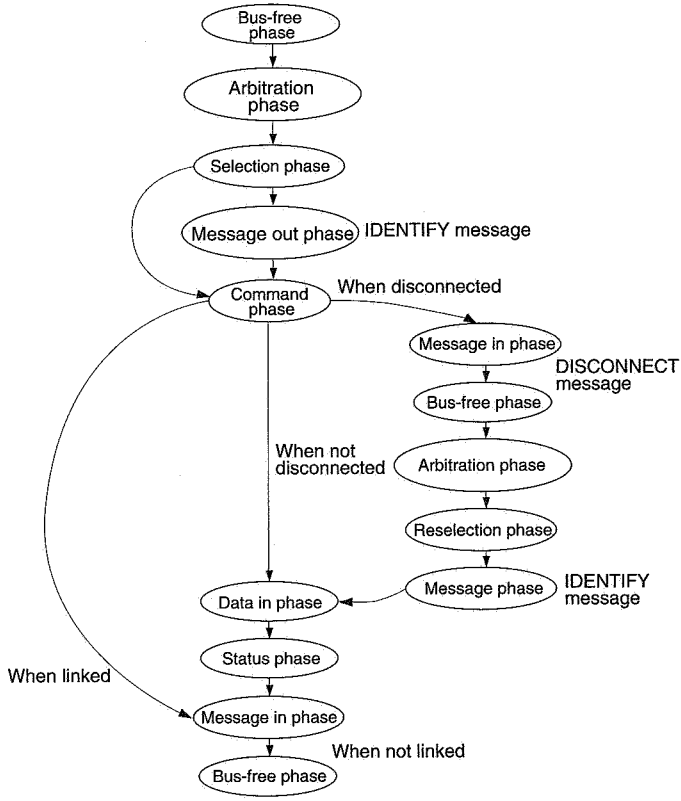

Figure 3-48

The function of each phase is as shown below.

The state of the SCSI bus during an operation between the initiator and the controller is divided into the following nine phases. The transition of these bus phases ensure that the SCSI bus cannot enter two or more phases at any one time. In a system which has a single initiator and does not use a disconnect/reconnect function, the arbitration phase and re-selection phase can be omitted.

COPYRIGHT © 1996 CANON INC.

Name	Function
Bus free phase	The state in which the SCSI bus is not used by any initiator or target. All signals on the bus are OFF.
Arbitration phase	The arbitration phase is used before the device which is to become the initiator selects the target, and also before the target device that is disconnected from the initiator selects the initiator (re-selection), in order to obtain the right to use the SCSI bus. This phase requires a multi-host environment in which a plurality of initiators exists. The initiator turns ON the BSY signal and simultaneously outputs its own ID bits to the SCSI bus, in order to obtain the right to use the bus. This phase can be omitted in a single initiator environment because no dispute over the bus arises.
Selection phase/re-selection phase	Each of the selection and re-selection phases is used to connect the initiator and the target by software. In the selection phase, when the initiator turns the SEL signal ON, the selection code which specifies the target number to be selected is output to the SCSI bus. Conversely, in the re-selection phase, the target device selects the initiator.
Command phase	In this phase, the initiator sends commands to the target device. The commands are sent as continuous bytes in a fixed form. When a link is specified in the command phase, the system will not return to the Bus-free phase after the status phase and the message input phase that follow, but will enter the command phase instead.

Table 3-10

COPYRIGHT © 1996 CANON INC.
CANON DR-3020 REV.0 FEB. 1996 PRINTED IN JAPAN (IMPRIME AU JAPON)

Name	Function
Data phase	This phase is used when data returns after a command that requires the return of data was executed in the command phase, or when data is being read from the disk or written to it. This phase can be either the DATA IN phase or the DATA OUT phase depending on whether the initiator receives data or sends it.
Status phase	In this phase, a status command which indicates the status in which execution of a command was completed is returned. The system sometimes enters the status phase during the actual execution of a command as well.
Message phase	This phase is either the MESSAGE OUT phase when a message is being sent from the initiator to the target device, or the MESSAGE IN phase when a message is being sent from the target device to the initiator. A message is generally used for providing notification of the state accompanying a transition phase between the target and the initiator. Messages consist of those that are always sent in a standard sequence, such as an identification, and those that are sent for processing purposes in the event of an error.

Table 3-10

COPYRIGHT © 1996 CANON INC.

4. SCSI Bus Conditions

The SCSI bus is provided with two kinds of asynchronous operations (bus conditions), an attention condition and a reset condition, to control the bus phase transition sequence.

The following is a description of these conditions.

• Attention condition

An attention condition is a function used to notify a controller that the initiator has some kind of message. The initiator can generate an attention condition at any time other than during the arbitration or bus free phase. An attention exists while the initiator the maintains the ATN signal true.

A controller that detected the ATN signal moves to the message out phase at the following timing, and receives a message from the initiator.

① If the ATN signal was detected in the command phase, the controller will enter the message out phase immediately after receiving all the command description blocks. The initiator must continue REQ/ACK handshaking until the phase changes.

② If the NTN signal was detected in the data phase, the controller will enter the message out phase immediately after all data has been transmitted. The initiator must continue REQ/ACK handshaking until the phase changes.

③ If the ATN signal was detected in the status phase, the initiator will enter the message out phase immediately after receiving the status.

④ If the ATN signal was detected in the message in phase, the initiator will enter the message out phase immediately after receiving the present message.

⑤ If the ATN signal was detected in the selection phase, the system will enter the message out phase immediately after the selection phase.

⑥ If the ATN signal was detected in the re-selection phase, the system will enter the message out phase immediately after receiving the "Identify message" in the message in phase immediately after the re-selection phase.

The controller continues to implement the message out phase until the ATN signal becomes false. Consequently, the initiator will maintain the ATN signal true, even if the message out phase starts. After the REQ signal corresponding to the prepared message (the final byte message in the case of a message consisting of a plurality of bytes) has been received, the ATN signal must be made false before a reply can be made to the ACK signal. If the ATN signal remains true after the ACK signal reply, the controller will judge that there is a message, maintain the message out phase, and output the REQ signal.

If the controller detected a parity error while receiving a message, it will maintain the message out phase until the ATN signal becomes false, then output the REQ signal without changing the phase. Next, the initiator will reply to this message request, and re-transmit the immediately preceding message. If it is necessary to re-send a plurality of bytes, the initiator will make the ATN signal true before replying to the first ACK signal.

If the controller receives a message normally, it will enter a data transmission phase other than the message phase or the bus free phase in accordance with the provisions of the message.

• Reset condition

A reset condition is a function used to interrupt the operation of a device or to disconnect all SCSI devices from the bus. reset condition can be generated for any SCSI device whatever by making the RST signal true for at least 25 μsec (Reset Hold Time). All SCSI devices must stop the drive to all signals other than the RST signal and release the bus within 800 nsec (Bus Clear Delay). The SCSI bus always enters the bus free phase after a reset condition.

COPYRIGHT © 1996 CANON INC.
CANON DR-3020 REV.0 FEB. 1996 PRINTED IN JAPAN (IMPRIME AU JAPON)

XI. POWER SUPPLY

A. Outline

When the main switch are turned ON, power from the AC mains is supplied to the DC power supply PCB.

The DC power supply PCB outputs +24 VDC, ±12 VDC, and +5 VDC.

When the delivery assembly is opened to solve a document jam, the delivery assembly open/close sensor switch is turned off, cutting off 24 VDC, which in turn cuts off the power supply to the motors, DC loads (such as clutches, solenoids, etc.), LED array, and BASIS drive PCB.

B. Power Supply Circuit Protection Function

A switching regulator is employed for the DC power supply circuit.

If a load is shorted because of an abnormality, resulting in an overload, the protection function will operate, causing the output to stop.

When the output stops, remove the cause of the short, and switch the power OFF. After about 10 minutes the power supply will be automatically reset.

COPYRIGHT © 1996 CANON INC.
CANON DR-3020 REV.0 FEB. 1996 PRINTED IN JAPAN (IMPRIME AU JAPON)

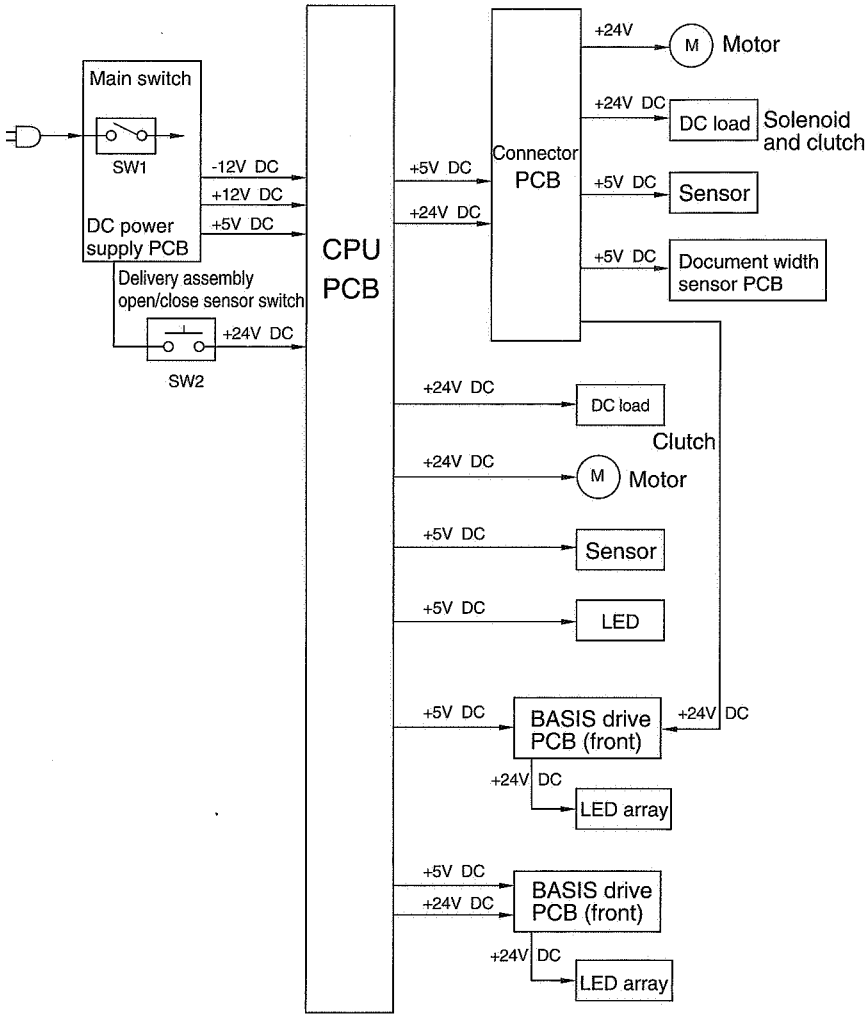

Figure 3-49

COPYRIGHT © 1996 CANON INC. CANON DR-3020 REV.0 FEB. 1996 PRINTED IN JAPAN (IMPRIME AU JAPON)

XII. LAYOUT OF ELECTRICAL COMPONENTS

A. Sensors

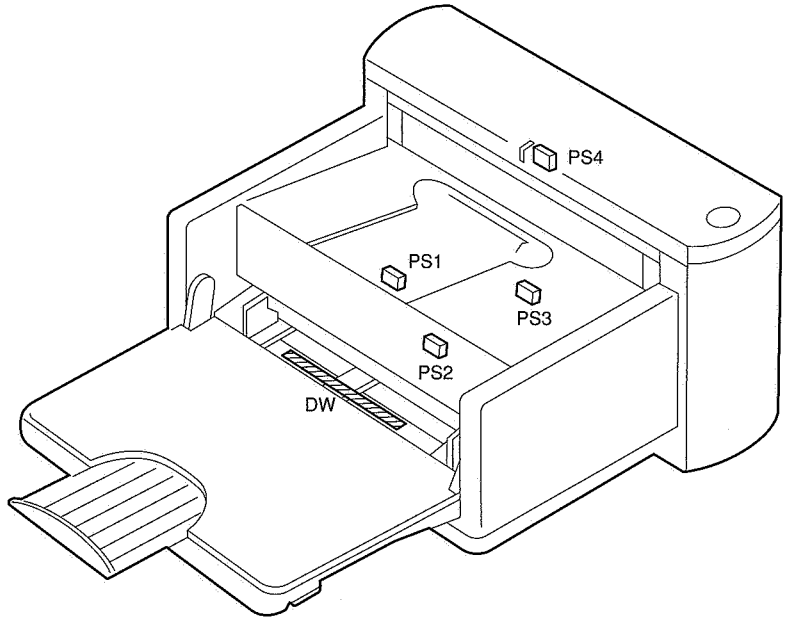

Figure 3-50

Symbol	Name	Code	Function
	Photo interrupter	PS1 PS PS3 PS4	Document detection on document board Document detection at registrator Document detection in machine (for starting of scanning) Document detection in the delivery assembly
	Sensor	DW	Document width detection

Table 3-11

COPYRIGHT © 1996 CANON INC.

B. Switches/LEDs

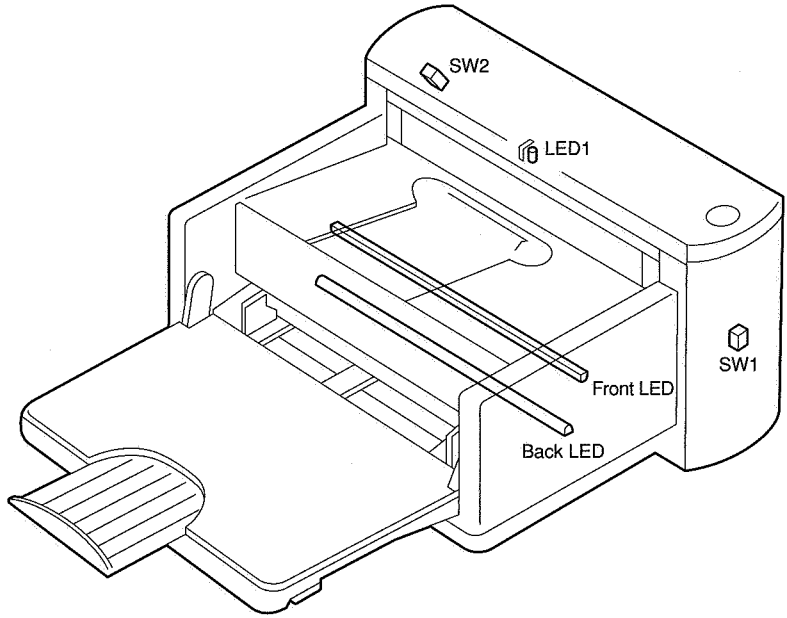

Figure 3-51

Symbol	Name	Code	Function
	Microswitch	SW1 SW2	For turning power on and off For interrupting 24 V power when the delivery assembly is open
	LED	LED1 (Front LED) (Back LED)	For DC power supply display For illuminating document (front) For illuminating document (back)

Table 3-12

COPYRIGHT © 1996 CANON INC. CANON DR-3020 REV.0 FEB. 1996 PRINTED IN JAPAN (IMPRIME AU JAPON)

C. Clutches/Solenoids/Motors

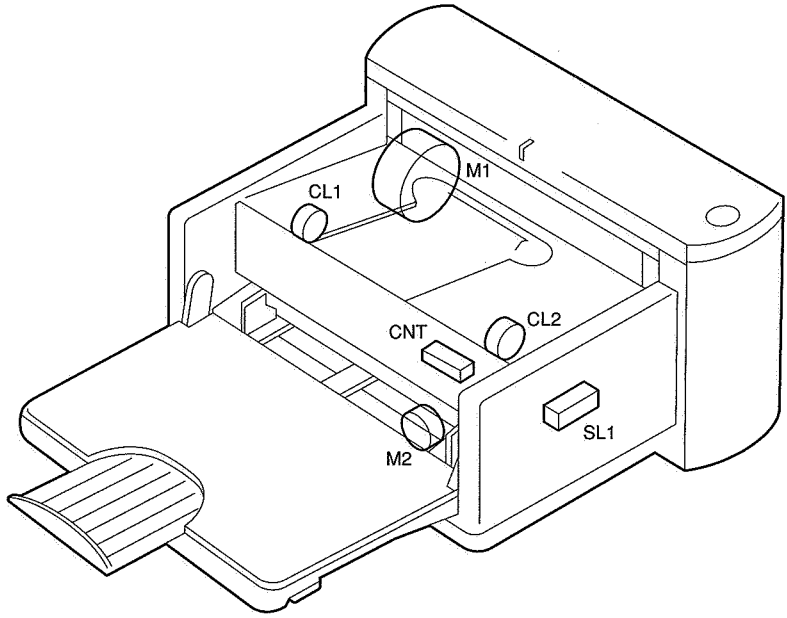

Figure 3-52

Symbol	Name	Code	Function
(CL)	Clutch	CL1 CL2	For document pick-up For document momentary stop
SL	Solenoid	SL1	For selecting manual feed
(M)	Motor	M1 M2	For feeding document For moving document board up and down
CNT	Counter	CNT	Count of paper pick-up

Table 3-13

COPYRIGHT © 1996 CANON INC.

D. PCBs

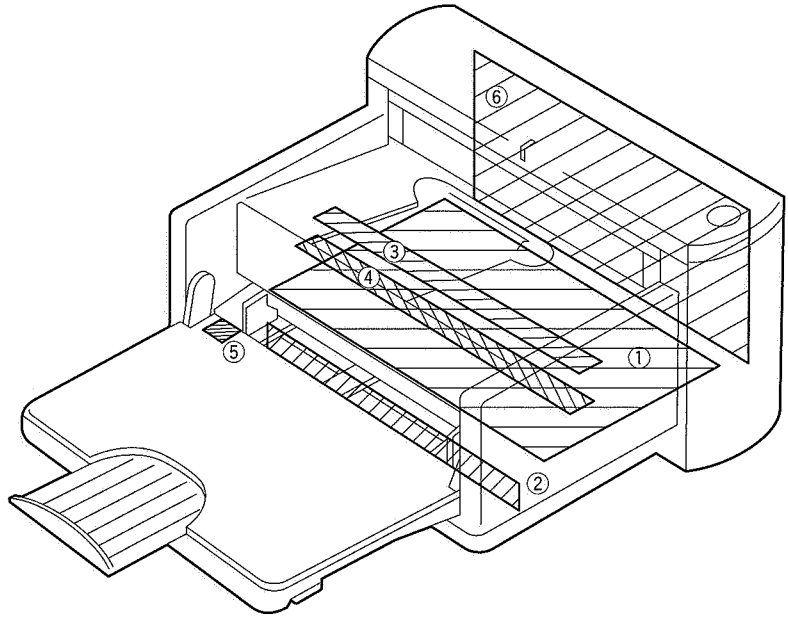

Figure 3-53

Code	Name	Function
①	CPU PCB	For sequence control and transmission with external devices
②	Connector PCB assembly	For connection between CPU PCB and DC loads and sensors
③	Front BASIS driver PCB	For driving BASIS (front)
④	Back BASIS driver PCB	For driving BASIS (back)
⑤	Document width sensor connector PCB	For connection between Connector PCB and document width sensor
⑥	DC power supply PCB	DC power supply, stabilization

Table 3-14

COPYRIGHT © 1996 CANON INC. CANON DR-3020 REV.0 FEB. 1996 PRINTED IN JAPAN (IMPRIME AU JAPON)

XIII. REFERENCE LIST OF VARIABLE RESISTORS (VR), LEDS, AND CHECK PINS FOR EACH PCB

The variable resistors (VRs), LEDs and check pins that are necessary for servicing the machine at the customer's premises are described in Figure 3-54.

VRs and check pins not listed in the table are for factory adjustment only. Special tools and measuring instruments are required to perform adjustments and checks using these VRs and check pins, and often a high degree of accuracy is demanded. Do not, therefore, touch these VRs and check pins.

Note:

1. Some LEDs pass a very small amount of current even in the normal (unlit) state, causing them to glow weakly even when they are supposed to be out.
2. VRs that may be adjusted at the customer's premises ..... ●
   VRs that must not be adjusted at the customer's premises ..... ⊘

A. CPU PCB Assembly

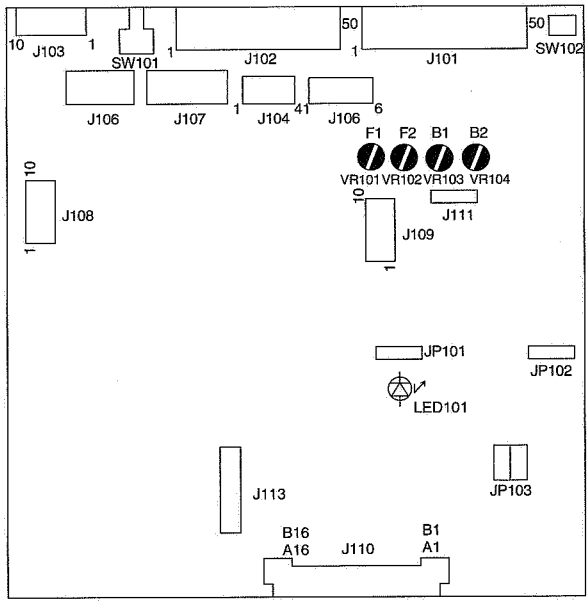

Figure 3-54

COPYRIGHT © 1996 CANON INC. CANON DR-3020 REV.0 FEB. 1996 PRINTED IN JAPAN (IMPRIME AU JAPON)

LED No.	Description
LED101	• DRAM check error when power switch is turned ON → Lights up • Address error → Lights up

Table 3-15

Dip Switch /JP No.	Setting
SW101	ID setting of SCSI
SW102	Setting of feed test mode
JP101-103	For factory check

Table 3-16

VR No.	Adjustment
VR101 VR102 VR103 VR104	BASIS output adjustment VR101 : For former half BASIS (front) VR102 : For latter half BASIS (front) VR103 : For former half BASIS (back) VR104 : For latter half BASIS (back) For adjustment, refer to page 7-13.

Table 3-17

Check Pin No.	Check
J111	For confirming voltage at time of shading correction J111-1: For former half front BASIS J111-2: For latter half front BASIS J111-3: For former half back BASIS J111-4: For latter half back BASIS Note: When checking, use an oscilloscope.

Table 3-18

· Setting of feed test mode

With the SCSI cable disconnected, set the SCIS ID to "7." Turn the power on and press SW102, and then the machine enters to the feed test mode.

Changing the SCSI ID to "6," "5," "4," and "3" under this state enables continuous feed at low speed, continuous feed at high speed, manual feed at low speed, and manual feed at high speed, respectively.

COPYRIGHT © 1996 CANON INC.
CANON DR-3020 REV.0 FEB. 1996 PRINTED IN JAPAN (IMPRIME AU JAPON)

B. Connector PCB Assembly

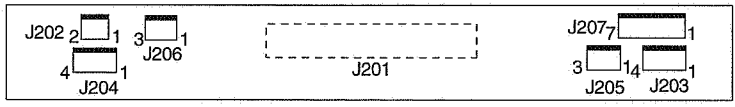

Figure 3-55

C. Pick-up Sensor PCB Assembly

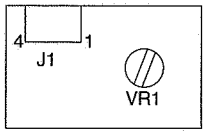

Figure 3-56

VR No.	Adjustment
VR1	Paper detection sensitivity adjustment Rotating VR clockwise increases sensitivity.

Table 3-19

D. BASIS Drive PCB Assembly

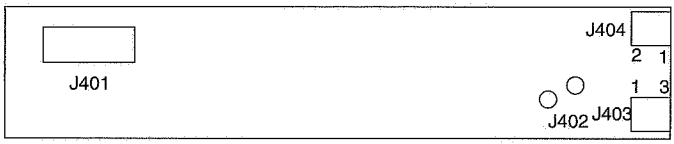

Figure 3-57

COPYRIGHT © 1996 CANON INC.

XV. LAYOUT OF MAJOR PCB DEVICES

The layout of the PCB elements that play particularly major roles on this machine and their functions are shown in Figure 3-58.

A. CPU PCB Assembly

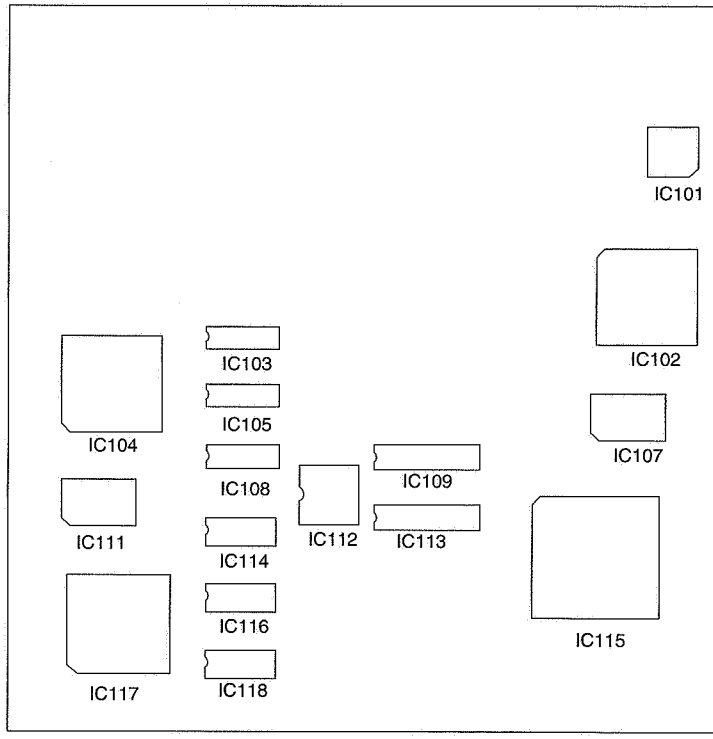

Figure 3-58

COPYRIGHT © 1996 CANON INC. CANON DR-3020 REV.0 FEB. 1996 PRINTED IN JAPAN (IMPRIME AU JAPON)

IC No.	Function
IC101 (SPC-CHIP)	Control gate array for SCSI interface
IC102 (SORAMAME-CHIP)	Control gate array for interface between IC107 (ENC-CHIP) and IC101 (SPC-CHIP)
IC103	Memory (64 Kbit) for composing image data from front BASIS and the back BASIS
IC104 (BASIS-CHIP)	BASIS drive and gate array for performing shading compensation and γ compensation
IC105	Memory (64 Kbit) for index table when performing shading compensation
IC107 (ENC-CHIP)	Gate array for compressing image data
IC108	Memory (64 Kbit) for conversion table when performing shading compensation
IC109	Buffer memory (16 Mbit) for image data transmission
IC111 (NOAH-CHIP)	Gate array for performing edge emphasizing and error diffusion
IC112	Flash ROM for working this machine and for writing all sorts of data
IC113	Buffer memory (16 Mbit) for image data transmission
IC114	Memory for processing error diffusion
IC115 (CPU)	Microprocessor for controlling this machine
IC116	Memory for processing edge emphasizing
IC117 (IFIII-CHIP)	Gate array for processing image of dust picture element erasing
IC118	Memory for processing edge emphasizing

Table 3-19

COPYRIGHT © 1996 CANON INC.

CHAPTER 4

MECHANICAL SYSTEM

This chapter describes the mechanical characteristics, operation, and disassembly and reassembly procedure.

Note that when disassembling and reassembling the machine, observe the following:

1. Before starting the disassembly and reassembly operations be sure to disconnect the power to the machine for safety sake.
2. Reassembly can be performed in the opposite way to disassembly unless otherwise mentioned.
3. In re-assembly, do not confuse the type of screws (length and diameter) and their location.
4. To ensure positive continuity of electricity, a toothed washer is used as a grounding wire retaining screw. Be sure to use this washer when reassembling the machine.
5. As a rule, do not operate the machine with any part removed.

I. EXTERNAL CONTROL 4-1
A. Outside Cover 4-1
B. Delivery Assembly Release Switch 4-8
II. DRIVE 4-10
A. Main Motor 4-10
B. Document Board Drive Motor 4-11
C. Adjusting the Belt Tension 4-13
III. DELIVERY 4-14
A. Pick-up Control Assembly 4-14
IV. EXPOSURE 4-22
A. Scanner Unit 4-22
V. ELECTRICAL 4-26
A. PCBs 4-26

COPYRIGHT © 1996 CANON INC. CANON DR-3020 REV.0 FEB. 1996 PRINTED IN JAPAN (IMPRIME AU JAPON)

I. EXTERNAL CONTROL

A. Outside Cover

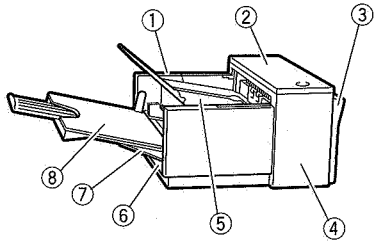

Figure 4-1

① Left cover	(1)	[2]
② Top cover	(0)	[4]
③ Rear cover	(2)	[0]
④ Right cover	(1)	[2]
⑤ Deliver tray cover	(0)	[0]
⑥ Lower front cover	(2)	[0]
⑦ Front cover	(0)	[0]
⑧ Pick-up tray	(2)	[0]

Note: The figures in ( ) and [ ] mean the numbers of fixing screws and mounting hooks, respectively.

When attempting to clean, check and repair the inside of the machine, remove the pertinent covers in the following procedure.

The procedure for removing the covers that can be removed simply and individually only by removing the mounting screws are omitted.

1. Left cover

① Remove the pick-up tray.
② Open the delivery assembly.
③ Remove the screw ①.

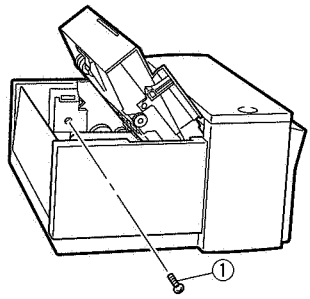

① Screw

Figure 4-2

④ Remove two screws ①, and then remove the rear cover ②.

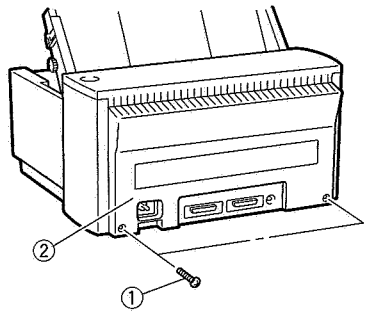

① Screws ② Rear cover

Figure 4-3

COPYRIGHT © 1996 CANON INC. CANON DR-3020 REV.0 FEB. 1996 PRINTED IN JAPAN (IMPRIME AU JAPON)

⑤ Detach two hooks ① and remove the left cover ②.

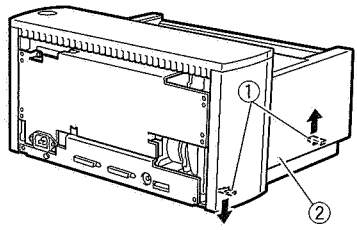

①Hooks ② Left cover

Figure 4-4

2. Right cover

① Remove the pick-up tray.
② Open the deliver assembly
③ Remove the screw ①.

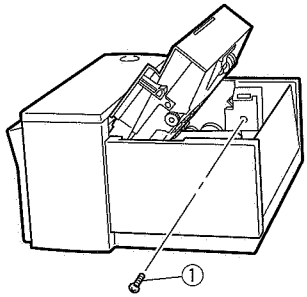

① Screw

Figure 4-5

④ Remove the rear cover. (2 screws)
Note: Be careful not to lose the knob for setting the SCSI ID.
⑤ Detach two hooks ①, and remove the right cover ②.

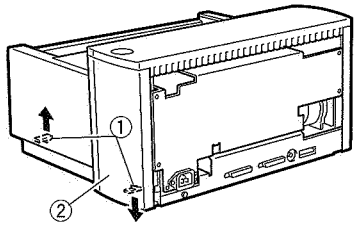

① Hooks ② Right cover

Figure 4-6

3. Top cover

① Remove the pick-up tray.
② Remove the rear cover (2 screws)
③ Detach four hooks ② (2 hooks each on both right and left sides), and lift up the top cover ② slightly.

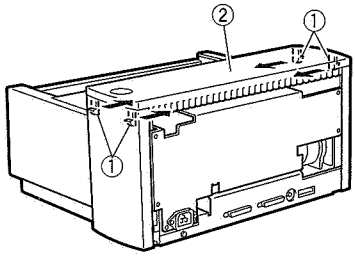

① Hooks ② Top cover

Figure 4-7

COPYRIGHT © 1996 CANON INC.
CANON DR-3020 REV.0 FEB. 1996 PRINTED IN JAPAN (IMPRIME AU JAPON)

④ Disconnect connector J701 at the rear side of the top cover.

Note: When installing the top cover, be sure to hook the harness detached in step 4 to the rib of the top cover ②. If the harness is not fixed by the rib, it may be caught by the delivery roller to be broken.

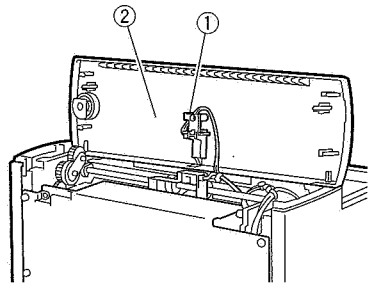

① LED mount ② Top cover

Figure 4-8

4. Front cover

① Remove the pick-up tray.
② Remove the rear cover. (2 screws)
③ Remove the right cover. (1 screw)
④ Remove the left cover. (1 screw)
⑤ Detach two springs ①, and then remove the front cover ②.

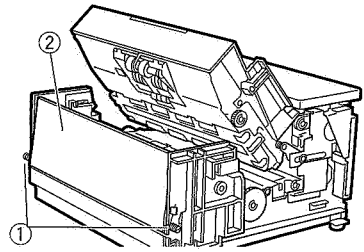

① Springs ② Front cover

Figure 4-9

Note: When installing the front cover, be careful not to confuse the springs detached in step 5.

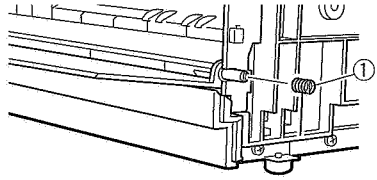

① Springs

Figure 4-10

5. Lower front cover

① Remove the pick-up tray.
② Remove the rear cover. (2 screws)
③ Remove the right cover. (1 screw)
④ Remove the left cover. (1 screw)
⑤ Remove the front cover.
⑥ Remove two screws ①, and then remove the right side plate ②.

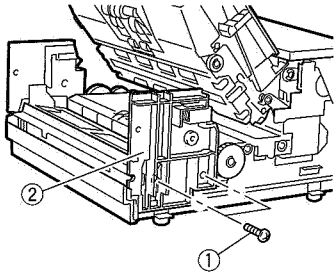

① Screws ② Right side plate

Figure 4-11

⑦ Shift the pick-up guide ① slightly, loosen two screws ②, and then remove the lower front cover ③.

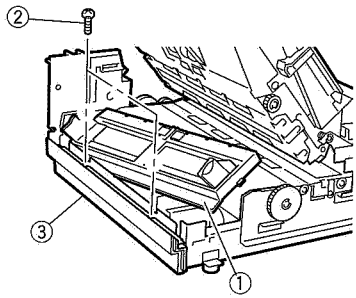

① Pick-up guide ③ Lower front cover
② Screws

Figure 4-12

6. Delivery tray cover

① Remove the pick-up tray.
② Remove the rear cover. (2 screws)
③ Remove the top cover.
④ Remove the right cover. (1 screw)
⑤ Remove the left cover. (1 screw)
⑥ Loosen the screw ①, release the tension of the belt ②, and then remove the belt ③.

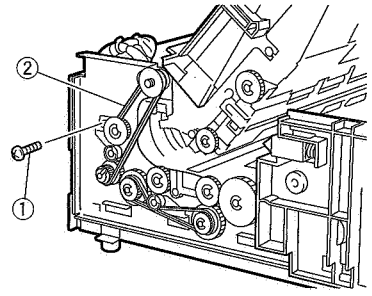

① Screw ② Belt

Figure 4-13

COPYRIGHT © 1996 CANON INC. CANON DR-3020 REV.0 FEB. 1996 PRINTED IN JAPAN (IMPRIME AU JAPON)

⑦ Remove the E-ring ①, and then the gear ② and pin ③.
Note: Be careful not to lose the pin.

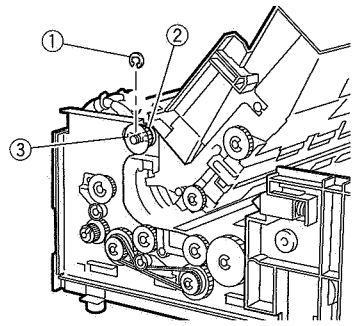

① E-ring ③ Pin
② Gear

Figure 4-14

⑧ Remove the E-ring ①, and then remove the bushing ②.

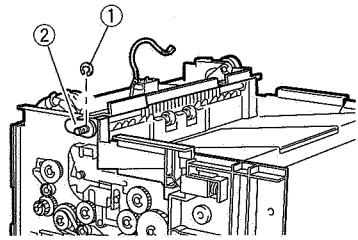

① E-ring ② Bushing

Figure 4-15

⑨ Remove the E-ring ①, shift the delivery roller shaft ② slightly, and then remove the bushing ③.

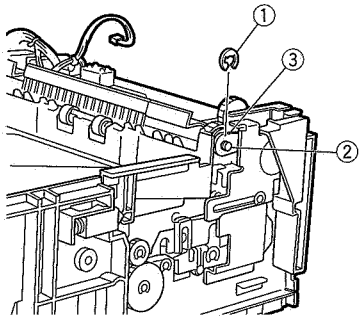

① E-ring ③ Bushing
② Delivery roller shaft

Figure 4-16

⑩ Remove the E-ring ①.

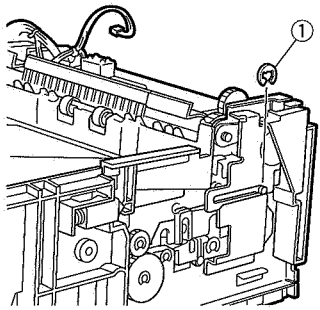

① E-ring

Figure 4-17

COPYRIGHT © 1996 CANON INC.

⑪ Remove two screws ①, and then remove the static eliminator brush mousnting plate ②.

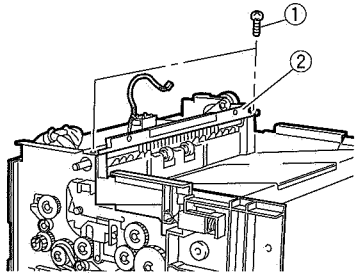

① Screws
② Static eliminator brush mounting plate

Figure 4-18

⑫ Remove the delivery roller shaft ①.

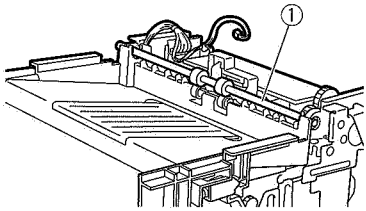

① Delivery roller shaft

Figure 4-19

⑬ Remove two screws ② paying attention to the harness while holding the delivery assembly ① by hand, and remove the delivery tray cover ③.

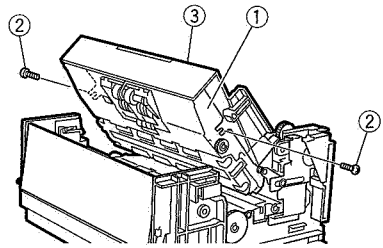

① Delivery assembly ③ Delivery tray cover
② Screws

Figure 4-20

COPYRIGHT © 1996 CANON INC. CANON DR-3020 REV.0 FEB. 1996 PRINTED IN JAPAN (IMPRIME AU JAPON)

7. Precaution when installing the delivery tray cover:

The delivery tray cover can basically be installed in the reverse procedure to the removal of the delivery tray cover; however attention must be paid to the following points.

① The harness ① of the front scanner unit should run through the inside of the delivery tray cover.

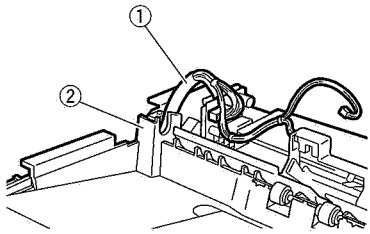

① Harness ② Delivery tray cover

Figure 4-21

② When installing the delivery tray unit, be careful not to damage the delivery paper sensing lever ①.

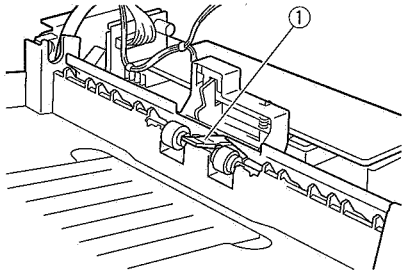

① Delivery paper sensing lever

Figure 4-22

③ When installing the delivery tray unit, make sure that the gear ① for open/close damper is engaged with the gear ② with the delivery tray unit open.

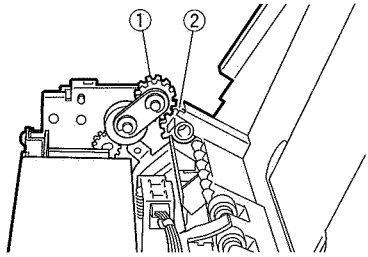

① Gear for open/close damper ② Gear

Figure 4-23

④ Adjusting the belt tension
While pressing the tension plate ② with a force of 400g in the arrow direction, tighten the screw ①.

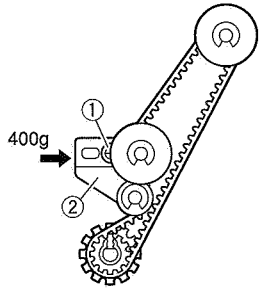

① Screw ② Tension plate

Figure 4-24

COPYRIGHT © 1996 CANON INC. CANON DR-3020 REV.0 FEB. 1996 PRINTED IN JAPAN (IMPRIME AU JAPON)

B. Delivery Assembly Open/ Close Sensor Switch

1. General Description

For safety sake, the 24 VDC power to the machine (primarily, the power for the main motor and solenoids) is cut off by this micro switch to prevent the machine from operating while the display assembly is open.

2. Removing the Delivery Assembly Open/Close Sensor Switch

① Remove the pick-up tray.
② Remove the rear cover. (2 screws)
③ Remove the top cover.
④ Remove the left cover. (1 screw)
⑤ Remove the screw ①, and then remove the tension plate ② and the belt ③.

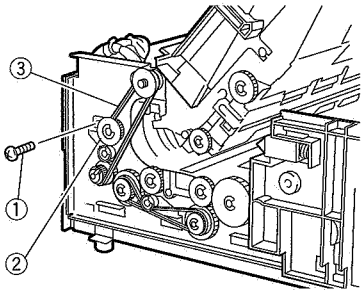

① Screw ③ Belt
② Tension plate

Figure 4-25

⑥ Remove five screws ①, and remove the DC power supply unit ②.

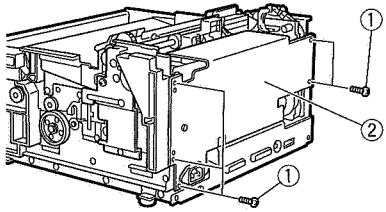

① Screws ② DC power supply unit

Figure 4-26

⑦ Remove the G-ring ① and the gear ②.

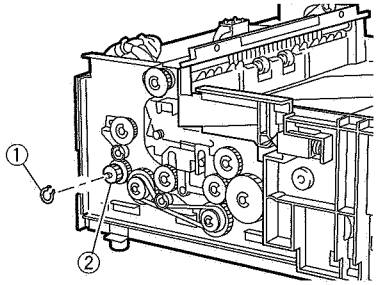

① G-ring ② Gear

Figure 4-27

COPYRIGHT © 1996 CANON INC.
CANON DR-3020 REV.0 FEB. 1996 PRINTED IN JAPAN (IMPRIME AU JAPON)

⑧ Disconnect connector CN1 ①, and remove the four screws ②.

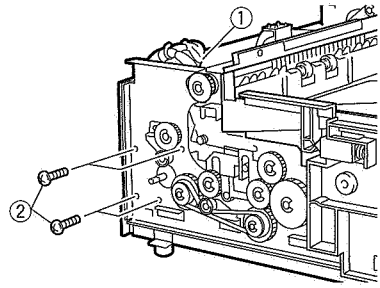

① Connector ② Screws

Figure 4-28

⑨ Pull out the two fastons ①, and then remove the main motor unit ②.

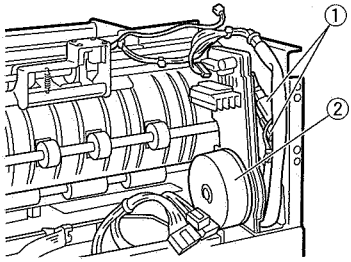

① Fastons ② Main motor unit

Figure 4-29

⑩ Remove one screw ①, and remove the delivery assembly release switch ②.

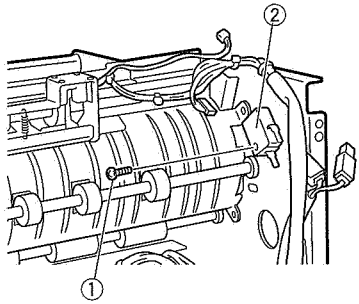

① Screw
② Delivery assembly release switch

Figure 4-30

COPYRIGHT © 1996 CANON INC. CANON DR-3020 REV.0 FEB. 1996 PRINTED IN JAPAN (IMPRIME AU JAPON)

II. DRIVE

A. Main Motor

1. Removing the Main Motor

① Remove the pick-up tray.
② Remove the rear cover. (2 screws)
③ Remove the top cover.
④ Remove the left cover. (1 screw)
⑤ Remove the screw ①, and then remove the tension plate ② and the belt ③.

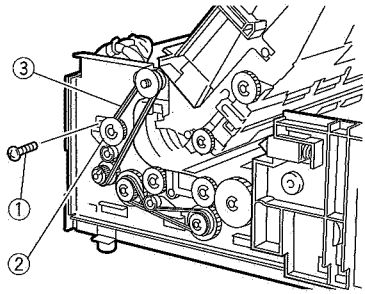

① Screw ③ Belt
② Tension plate

Figure 4-31

⑥ Remove five screws ①, and remove the DC power supply unit ②.

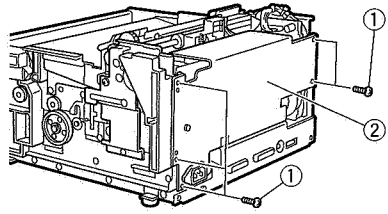

① Screws
② DC power supply unit

Figure 4-32

⑦ Remove the G-ring ① and the gear ②.

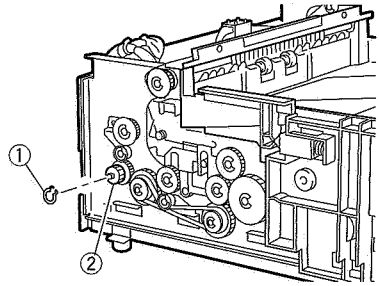

① G-ring ② Gear

Figure 4-33

COPYRIGHT © 1996 CANON INC.
CANON DR-3020 REV.0 FEB. 1996 PRINTED IN JAPAN (IMPRIME AU JAPON)

⑧ Disconnect connector CN1 ①, and remove the four screws ②.

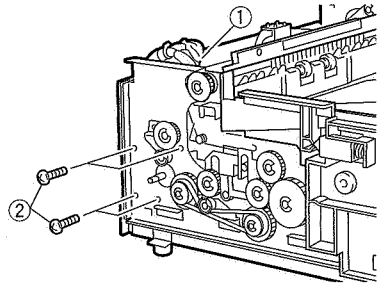

① Connector ② Screws

Figure 4-34

⑨ Pull out the two fastons ①, and then remove the main motor unit ②.

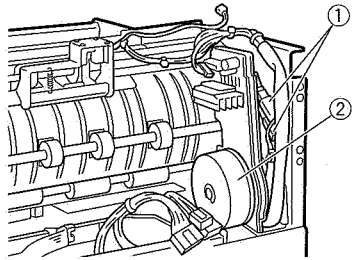

① Fastons
② Main motor unit

Figure 4-35

B. Document Board Drive Motor

1. Removing the Document Board Drive Motor

① Remove the pick-up tray.
② Remove the rear cover. (2 screws)
③ Remove the right cover. (1 screw)
④ Remove the left cover. (1 screw)
⑤ Remove the front cover.
⑥ Remove two screws ①, and remove the right side plate ② and the pick-up guide ③.

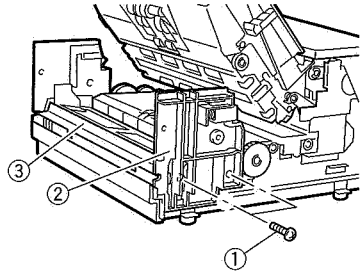

① Screws ③ Pick-up guide
② Right side plate

Figure 4-36

COPYRIGHT © 1996 CANON INC.

⑦ Remove the E-ring ① and the gear ②.

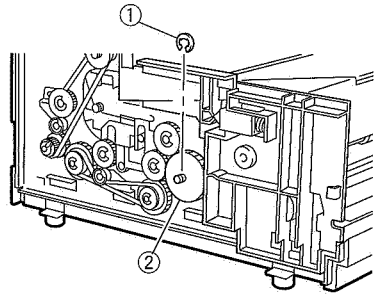

① E-ring ② Gear

Figure 4-37

⑧ Remove two screws ①.

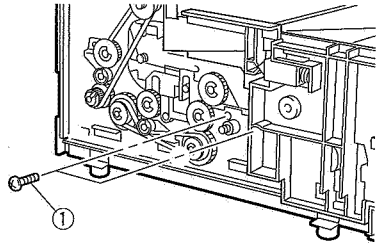

① Screws

Figure 4-38

⑨ Remove two screws ①, and then shift the separation guide unit ②.

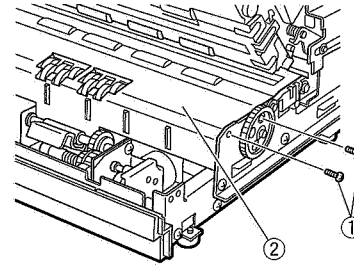

① Screws ② Separation guide unit

Figure 4-39

⑩ Remove three screws ①, disconnect connector J202 ②, and then remove the document board drive motor unit ③.

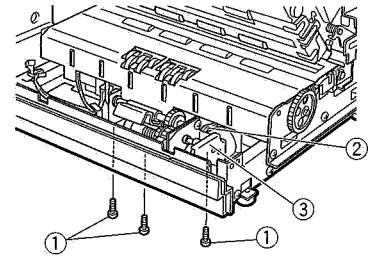

① Screws
② Connector
③ Document board drive motor unit

Figure 4-40

COPYRIGHT © 1996 CANON INC. CANON DR-3020 REV.0 FEB. 1996 PRINTED IN JAPAN (IMPRIME AU JAPON)

⑪ Remove two screws ①, and remove the document board drive motor ②.

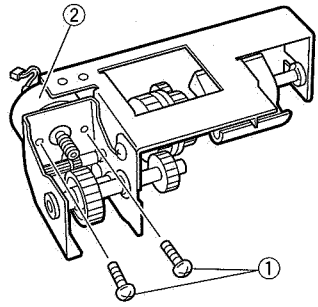

① Screws
② Document board drive motor

Figure 4-41

C. Adjusting the Belt Tension

While pressing the tension plate ② with a force of 100 g in the arrow direction, tighten the screw ①.

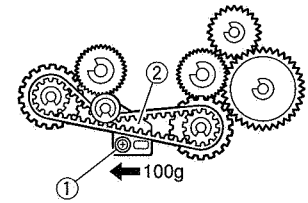

① Screws ② Tension plate

Figure 4-42

III. DELIVERY

A. Pick-up Control Assembly

1. Feeder Roller

① Remove the pick-up tray.
② Remove the rear cover. (2 screws)
③ Remove the left cover. (1 screw)
④ Remove the right cover. (1 screw)
⑤ Open the delivery assembly.
⑥ Remove four screws ①, and remove the pick-up guide plate ②.

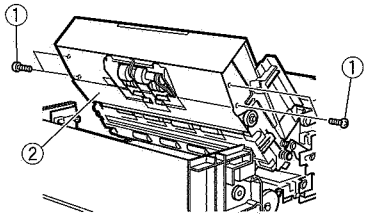

① Screws ② Pick-up guide plate

Figure 4-43

⑦ Release the two springs ② of the front scanner unit ①.

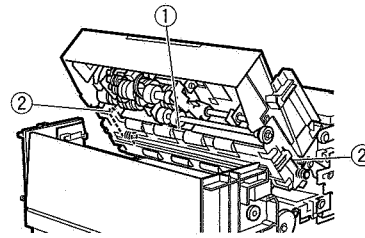

① Front scanner unit

Figure 4-44

⑧ While holding it by hand, remove two screws ②, and put the front scanner unit ① down.

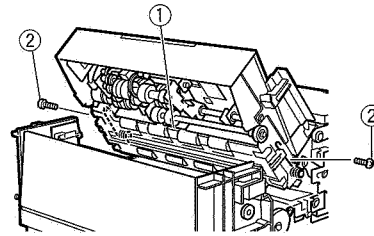

① Front scanner unit ② Screws

Figure 4-45

COPYRIGHT © 1996 CANON INC.
CANON DR-3020 REV.0 FEB. 1996 PRINTED IN JAPAN (IMPRIME AU JAPON)

⑨ Remove seven screws ②, and put the pick-up control assembly ① down.

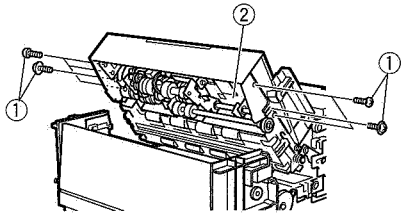

① Screws ② Pick-up control assembly

Figure 4-46

⑩ Disconnect four connectors ①, and remove the pick-up control assembly ②.

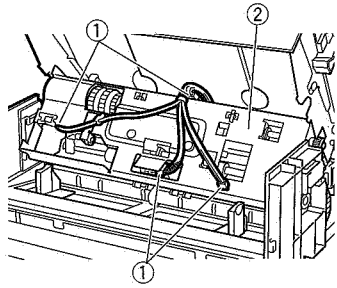

① Connectors ② Pick-up control assembly

Figure 4-47

⑪ Remove three E-rings ① and one washer ②.

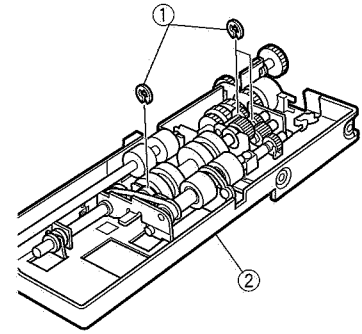

① E-rings ② Washer

Figure 4-48

⑫ Remove the left side ball bearing ①, and then remove the feeder roller assembly ③ while pressing the right side ball bearing ② to the right, paying attention not to exert any load to the gears.

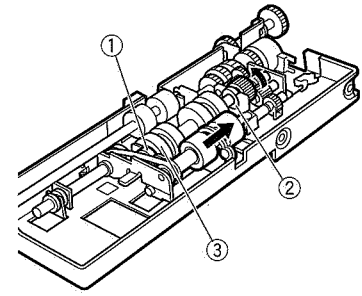

① Ball bearing ③ Feeder roller assembly
② Ball bearing

Figure 4-49

COPYRIGHT © 1996 CANON INC.

⑬ Put a mark ③ showing the position of the feeder roller ② on the feeder roller shaft ① with a marker, loosen two hex screws ④, and then remove the feeder roller ②.

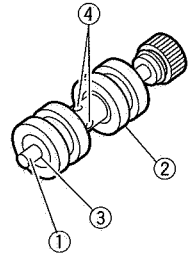

① Feeder roller shaft ③ Mark
② Feeder roller ④ Hex screws

Figure 4-50

2. Installation of Pick-up Guide Plate

Fix the pick-up guide plate ① with screws, pressing the projection ② upward and the projection ③ backward.

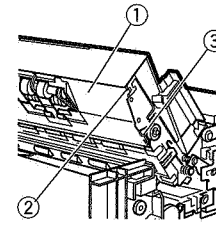

① Pick-up guide plate ③ Projection
② Projection

Figure 4-51

COPYRIGHT © 1996 CANON INC.
CANON DR-3020 REV.0 FEB. 1996 PRINTED IN JAPAN (IMPRIME AU JAPON)

3. Pick-up Clutch

① Remove the pick-up control assembly in the same procedure as that for removing the feeder roller (Refer to page 4-15).
② Remove the E-ring ①, and remove the gear ② and pin ③.

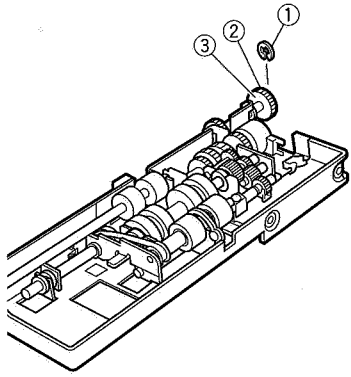

① E-ring ③ Pin
② Gear

Figure 4-52

③ Remove the G-ring ①, and remove the pick-up clutch ②.

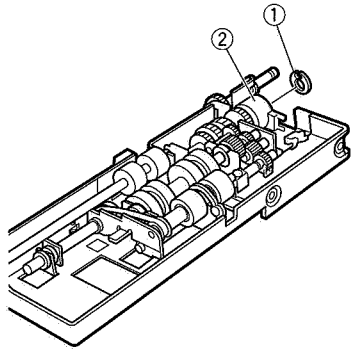

① G-ring ② Pick-up clutch

Figure 4-53

4. Pick-up Roller

① Remove the pick-up tray.
② Remove the delivery assembly.
③ Remove four screws ①, and remove the pick-up guide plate ②.

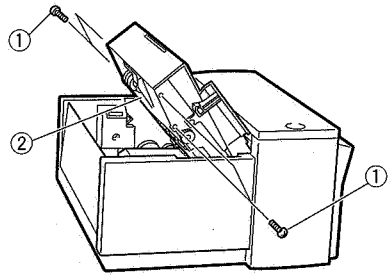

① Screws ② Pick-up guide plate

Figure 4-54

④ Remove the E-ring ①, and remove the pick-up roller ③ paying attention to the sensor lever ②.

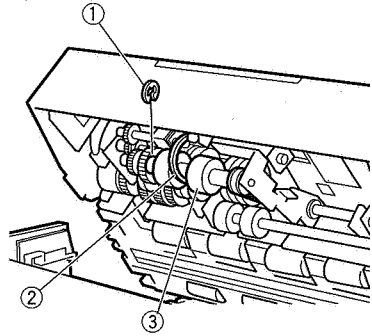

① E-ring ③ Pick-up roller
② Sensor lever

Figure 4-55

COPYRIGHT © 1996 CANON INC.

5. Separation Roller

① Remove the pick-up tray.
② Remove the rear cover. (2 screws)
③ Remove the right cover. (1 screw)
④ Remove the left cover. (1 screw)
⑤ Remove the front cover.
⑥ Remove E-ring ①, and remove the gear ②.

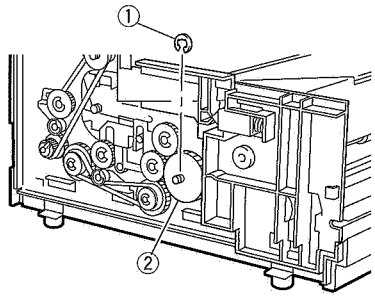

① E-ring ② Gear

Figure 4-56

⑦ Remove two screws ①.

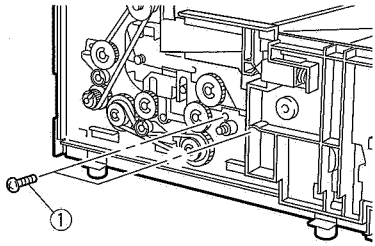

① Screws

Figure 4-57

⑧ Remove two screws ①, slightly shift the separation guide unit ② toward you, disconnect the connector ③, and then remove the separation guide unit ②.

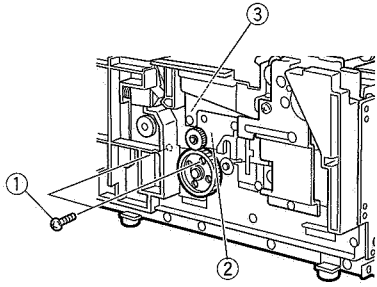

① Screws ③ Separation guide unit
② Connector

Figure 4-58

⑨ Remove two E-rings ①, and then remove two gears ② and pin ③.

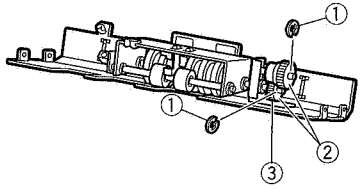

① E-rings ③ Pin
② Gears

Figure 4-59

COPYRIGHT © 1996 CANON INC.
CANON DR-3020 REV.0 FEB. 1996 PRINTED IN JAPAN (IMPRIME AU JAPON)

⑩ Remove the E-ring ①, and then remove the bushing ②.

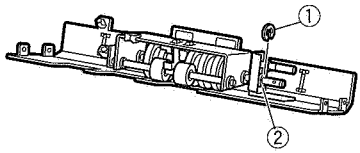

① E-ring ② Bushing

Figure 4-60

⑪ Remove the screw ①, retainer ②, washer ③, and bushing ④, and then remove the separation roller unit ⑤.

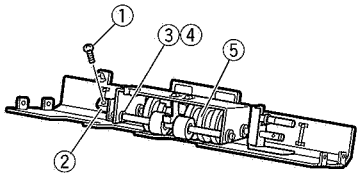

① Screw ④ Bushing
② Retainer ⑤ Separation roller unit
③ Washer

Figure 4-61

⑫ Remove the E-ring ① and bushing ②, and then remove the separation roller shaft ③.

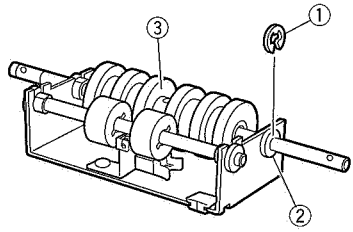

① E-ring ③ Separation roller shaft
② Bushing

Figure 4-62

⑬ Put a mark ③ showing the position of the separation roller ② on the separation roller shaft ① with a marker, loosen two hex screws ④, and then remove the separation roller ②.

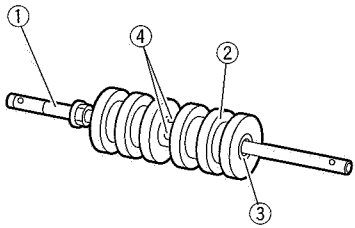

① Separation roller shaft ③ Mark
② Separation roller ④ Hex screws

Figure 4-63

COPYRIGHT © 1996 CANON INC.

6. Mounting the Separation Guide Plate

When mounting the separation guide plate, fasten the screw while pressing the projection ② on the separation guide plate ① in the lower rear direction.

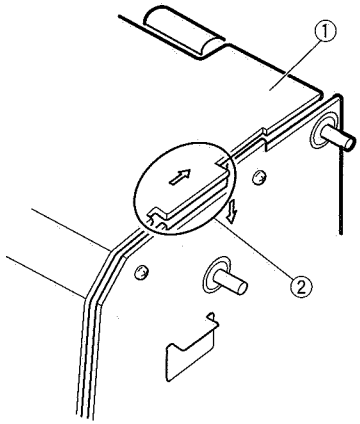

① Separation guide plate ② Projection

Figure 4-64

7. Mounting the Separation Roller

Insert the hex key through the hole on the separation guide plate paying attention so that the feed roller does not interfere with the separation roller ①, and fix the separation roller ② with the hex key.

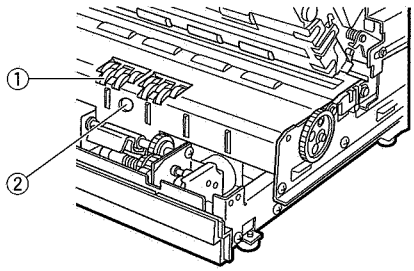

① Separation roller ② Separation roller

Figure 4-65

8. Separation Adjustment

① Disconnect the SCSI cable, set the ID of the SCSI to "7", and turn power on.
② Press push switch SW102 on the CPU PCB assembly, and the machine will enter the feed mode.
③ Place the standard white paper (FY9-3004) on the document board.
④ Set the ID of the SCSI to "6", and the machine will enter continuous feed mode at low speed.
⑤ After the third paper has been delivered, immediately turn the power off.
⑥ Open the delivery unit, and remove the separation guide plate.
⑦ Loosen the screw ③, and fix the screw ③ while pressing the stopper ① to the shaft support plate ②.
⑧ At this point, if the stopper ① has already been pressed to the shaft support plate ②, shift the stopper ① leftward to part it from the shaft support plate ②, and then repeat the same procedure from step 1.

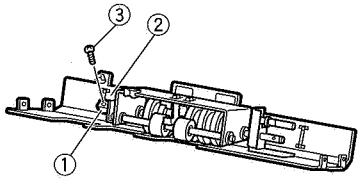

① Stopper ③ Screw
② Shaft support plate

Figure 4-66

COPYRIGHT © 1996 CANON INC.
CANON DR-3020 REV.0 FEB. 1996 PRINTED IN JAPAN (IMPRIME AU JAPON)

9. Momentary Stop Clutch

① Remove the separation guide unit in the same procedure as that for removing the separation roller (refer to page 4-19).

② Remove the E-ring ① and gear ②. Here, be careful not to lose the pin ③.

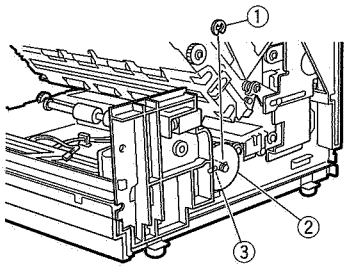

① E-ring ③ Pin
② Gear

Figure 4-67

③ Remove the E-ring ①, and remove the bushing ②.

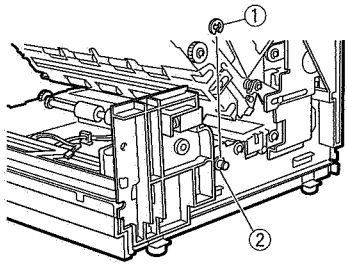

① E-ring ② Bushing

Figure 4-68

④ Remove the G-ring ①, pull out the shaft ②, disconnect the connector ③, and then remove the momentary stop clutch ④.

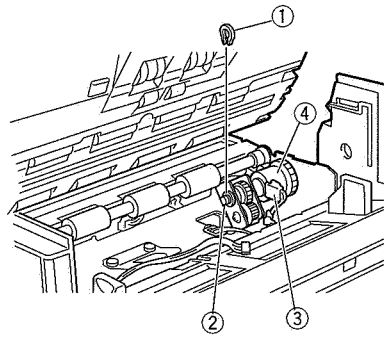

① G-ring ③ Connector
② Shaft ④ Momentary stop clutch

Figure 4-69

IV. EXPOSURE

A. Scanner Unit

1. Removing the Front Scanner Unit

① Remove the pick-up tray.
② Remove the rear cover. (2 screws)
③ Remove the left cover. (1 screw)
④ Remove the right cover. (1 screw)
⑤ Release the spring ①.

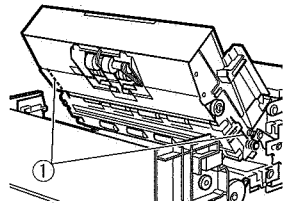

① Spring

Figure 4-70

⑥ Remove two screws ② while holding the front scanner unit by hand, and then put the front scanner unit ① down.

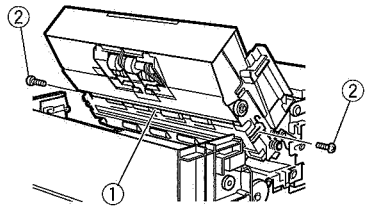

① Front scanner unit ② Screw

Figure 4-71

⑦ Disconnect two connectors ①, and remove the front scanner unit ②.

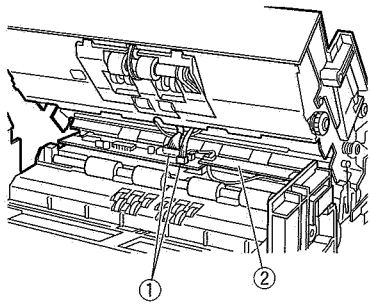

① Connectors ② Front scanner unit

Figure 4-72

COPYRIGHT © 1996 CANON INC.
CANON DR-3020 REV.0 FEB. 1996 PRINTED IN JAPAN (IMPRIME AU JAPON)

2. Removing the Back Scanner Unit

① Remove the pick-up tray.
② Remove the rear cover. (2 screws)
③ Remove the right cover. (1 screw)
④ Remove the left cover. (1 screw)
⑤ Remove the front cover.
⑥ Remove the E-ring ① and gear ②.

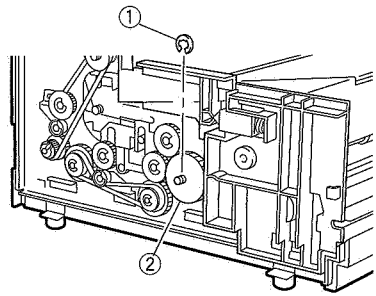

① E-ring ② Gear

Figure 4-73

⑦ Remove two screws ①.

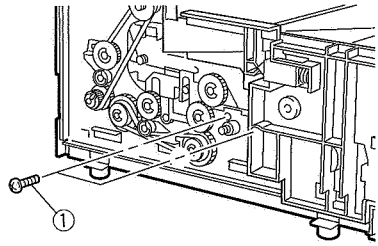

① Screws

Figure 4-74

⑧ Remove two screws ①, shift the separation guide unit ② slightly, remove the connector ③, and remove the unit ②.

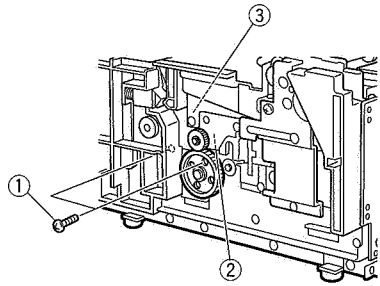

① Screws ③ Connector
② Separation guide unit

Figure 4-75

⑨ Remove two screws ①.

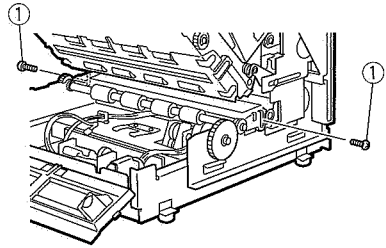

① Screws

Figure 4-76

COPYRIGHT © 1996 CANON INC. CANON DR-3020 REV.0 FEB. 1996 PRINTED IN JAPAN (IMPRIME AU JAPON)

⑩ Remove the E-ring ①, washer ②, and bearing ③, and then remove the roller shaft ④.

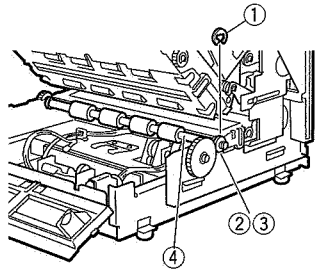

① E-ring ③ Bearing
② Washer ④ Roller shaft

Figure 4-77

⑪ Remove five screws ①, and remove the DC power supply unit ②.

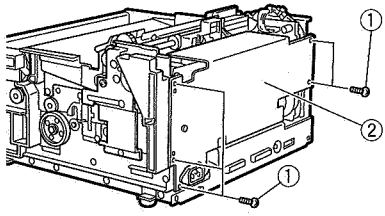

① Screws ② DC power supply unit

Figure 4-78

⑫ Remove the three screws ①.

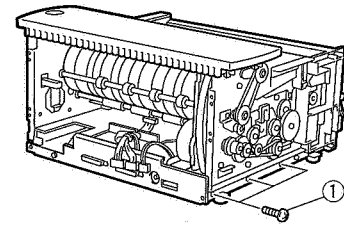

① Screws

Figure 4-79

⑬ Remove three screws ①, and then slightly draw out the CPU PCB assembly ②.

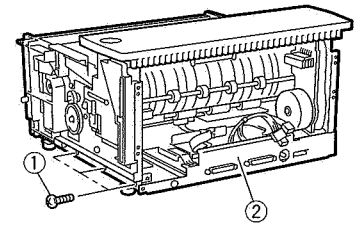

① Screws ② CPU PCB assembly

Figure 4-80

COPYRIGHT © 1996 CANON INC. CANON DR-3020 REV.0 FEB. 1996 PRINTED IN JAPAN (IMPRIME AU JAPON)

⑭ Disconnect two connectors ①, and then remove the back scanner unit ②.

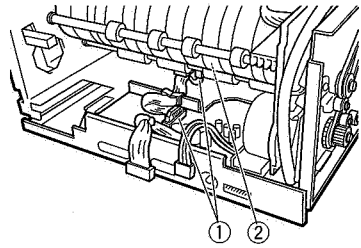

① Connectors ② Back scanner unit

Figure 4-81

COPYRIGHT © 1996 CANON INC.

V. ELECTRICAL

A. PCBs

1. DC power supply unit

① Remove the rear cover. (2 screws)
② Remove five screws ①, and tilt the DC power supply unit ②.

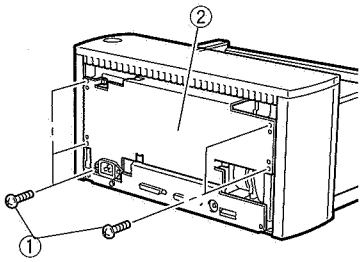

① Screws ② DC power supply unit

Figure 4-82

③ Disconnect three connectors (CN2, CN3, and CN4) ①, and remove the DC power supply unit ②.

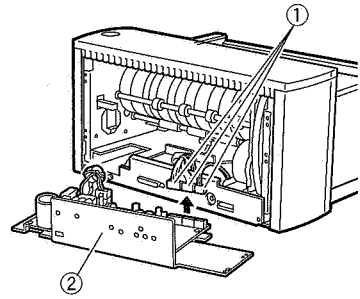

① Connectors ② DC power supply unit

Figure 4-83

COPYRIGHT © 1996 CANON INC. CANON DR-3020 REV.0 FEB. 1996 PRINTED IN JAPAN (IMPRIME AU JAPON)

2. CPU PCB Assembly

① Remove the pick-up tray.
② Remove the rear cover. (2 screws)
③ Remove the left cover. (1 screw)
④ Remove the right cover. (1 screw)
⑤ Remove the DC power supply unit. (5 screws)
⑥ Remove three screws ①.

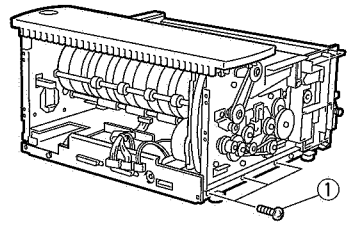

① Screws

Figure 4-84

⑦ Remove three screws ①.

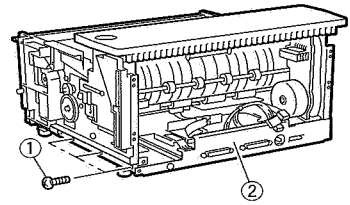

① Screws

Figure 4-85

⑧ Disconnect four connectors J109, J106, J107, and J108 ①, and pull out the CPU PCB unit ②.

Note: When pulling out the CPU PCB assembly ②, pay attention to the harness.

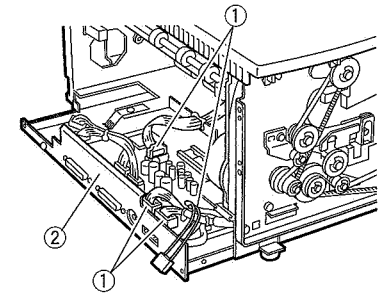

① Connectors ② CPU PCB assembly

Figure 4-86

⑨ Remove ten screws ①, and remove the CPU PCB assembly ②.

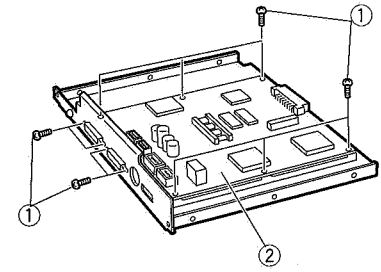

① Screws ② CPU PCB assembly

Figure 4-87

COPYRIGHT © 1996 CANON INC. CANON DR-3020 REV.0 FEB. 1996 PRINTED IN JAPAN (IMPRIME AU JAPON)

3. Connector PCB Assembly

① Remove the pick-up tray.
② Remove the rear cover. (2 screws)
③ Remove the right cover. (1 screw)
④ Remove the left cover. (1 screw)
⑤ Remove the front cover.
⑥ Remove the front lower cover. (2 screws)
⑦ Remove two screws ①, and remove the right side plate ② and then pick-up guide ③.

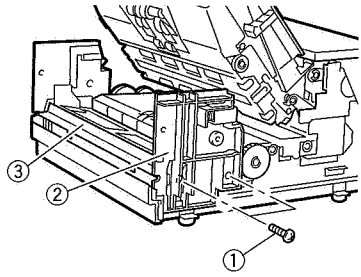

① Screws ② Right side plate

Figure 4-88

⑧ Remove the E-ring ① and gear ②.

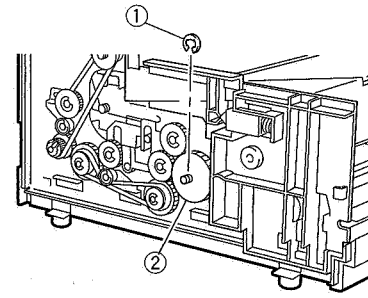

① E-ring ② Gear

Figure 4-89

⑨ Remove two screws ①.

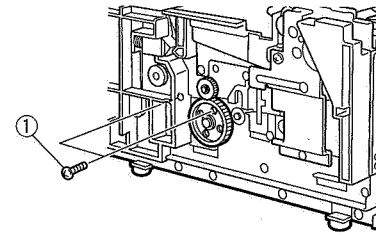

① Screws

Figure 4-90

COPYRIGHT © 1996 CANON INC.
CANON DR-3020 REV.0 FEB. 1996 PRINTED IN JAPAN (IMPRIME AU JAPON)

⑩ Remove two screws ①, and shift the separation guide unit ②.

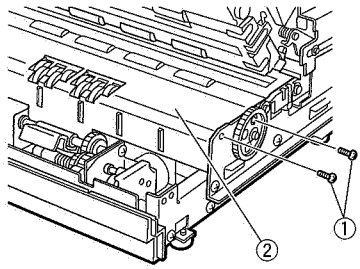

① Screws ② Separation guide unit

Figure 4-91

⑪ Remove three screws ①, disconnect connector J202 ②, and then remove the document board drive motor assembly ③.

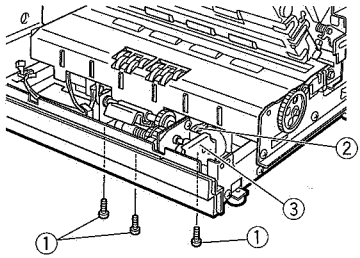

① Screws
② Connector
③ Document board drive motor assembly

Figure 4-92

⑫ Loosen two screws ①, and remove the lower front cover ②.

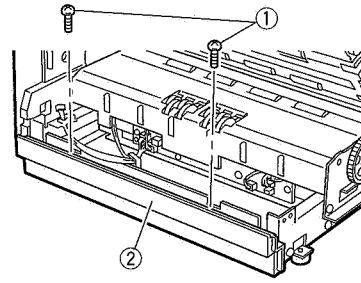

① Screws ② Lower front cover

Figure 4-93

⑬ Disconnect four connectors J203, J204, J206, and J207 ①, remove four screws ②, and then remove the connector PCB assembly ③.

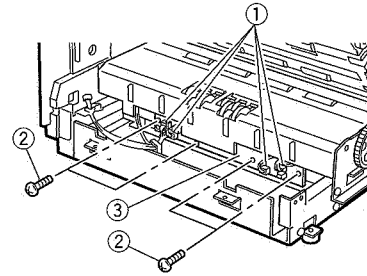

① Connectors
② Screws
③ Connector PCB assembly

Figure 4-94

COPYRIGHT © 1996 CANON INC.

CHAPTER 5

INSTALLATION

Each machine is carefully adjusted and strictly inspected before it leaves the factory. It is important to install and set it up properly in order to maintain its performance at the same high level.

The service technician should fully understand the function of the machine, install it properly in a suitable location, and carry out the necessary checks before it is used by the customer.

I. INSTALLATION SUGGESTIONS..... 5-1 II. UNPACKING AND INSTALLATION ... 5-2

COPYRIGHT © 1996 CANON INC. CANON DR-3020 REV.0 FEB. 1996 PRINTED IN JAPAN (IMPRIME AU JAPON)

I. INSTALLATION SUGGESTIONS

It is recommended that the serviceman personally inspect the customer's premises before installing any machine. The location should meet the following requirements:

- The power supply should be connected to an outlet able to supply the voltage shown on the rating plate plus or minus 10%. A grounding plug must be used.
- The temperature should be between 10 and 32.5°C (50-90.5 F), and relative humidity between 20 and 85% RH. In particular, do not install the machine near water taps, hot-water heaters, and refrigerators.
- The machine should not be exposed to open flame, dust, direct sunlight, or intensive vibration.
  * In application where installation of the machine in a sunny location is unavoidable, a heavy curtain should be installed on the windows to protect the machine.

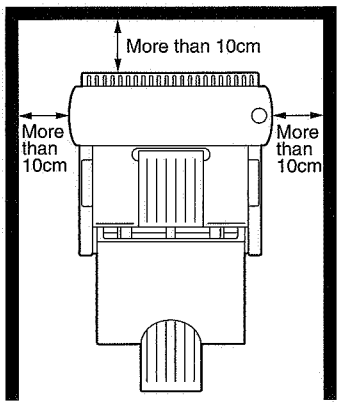

Figure 5-1

COPYRIGHT © 1996 CANON INC. CANON DR-3020 REV.0 FEB. 1996 PRINTED IN JAPAN (IMPRIME AU JAPON)

II. UNPACKING AND INSTALLATION

If the machine (in its shipping container) has been stored in a cold location, it should not be unpacked in a warm room until it has had time to warm up, otherwise moisture can condense on the metal and glass parts, resulting in a trouble. At least one hour should be allowed for the machine to warm up to room temperature before the shipping container is opened.

No.	Procedure	Inspection/Remarks
1	Open the shipping container of the main body of the machine.	
2	Take out the parts and other materials in the shipping container.	Check that the following items are there: • Main body • Power supply cord • Grounding wire (on 100 V machines only) • Guarantee sheet (100, 120 V machine only) • Delivery auxiliary guide • Operation manual • Device driver (floppy disk) • Device driver manual • User registration card • Function sheet (A4/LTR) • Terminator
3	Move the machine to where it is be installed.	
4	Peel off all the filament tape securing the various units.	Check all covers for possible damage incurred during transportation.
5	Open the delivery unit and peel off the protective sheet on the glass guide.	
6	Install a personal computer.	• Install SCSI interface board. • Install the peripheral devices. (For installation of the SCSI interface board and peripheral devices, refer to each operation manual.)
7	Connect the personal computer to the main body using SCSI cable.	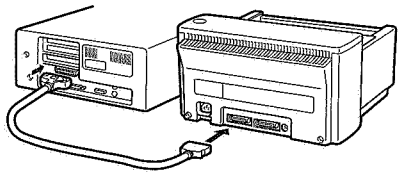

COPYRIGHT © 1996 CANON INC.
CANON DR-3020 REV.0 FEB. 1996 PRINTED IN JAPAN (IMPRIME AU JAPON)

No.	Procedure	Inspection/Remarks
8	Connect SCSI terminator to SCSI connector of the main body which is not in use. **Note:** In applications where the same SCSI line is connected with peripheral devices such as a printer, connect the SCSI terminator to the last peripheral device on the SCSI line.	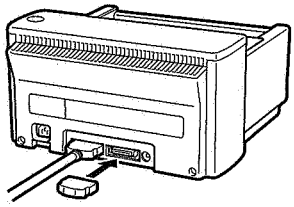
9	Set the ID of SCSI using the SCSI ID switch. **Note:** Be careful not to set the same ID number as those of devices connected to other SCSI devices.	
10	Connect the power cord.	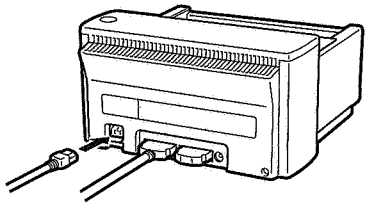

COPYRIGHT © 1996 CANON INC.

No.	Procedure	Inspection/Remarks
11	Install the delivery auxiliary tray.	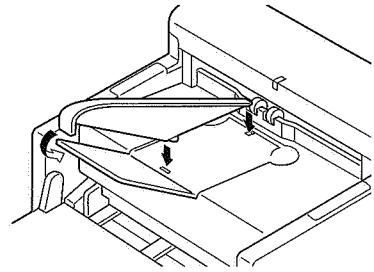
12	Turn on the power to the peripheral devices first, and then the power to the personal computer.	
13	Install the device driver. Refer to the manual on the device driver.	
14	Install the application software. Refer to the operation manual on the application software.	

COPYRIGHT © 1996 CANON INC.
CANON DR-3020 REV.0 FEB. 1996 PRINTED IN JAPAN (IMPRIME AU JAPON)

CHAPTER 6

MAINTENANCE AND SERVICING

I. PARTS TO BE REPLACED PERIODICALLY 6-1

II. CONSUMABLE PARTS 6-1

COPYRIGHT © 1996 CANON INC. CANON DR-3020 REV.0 FEB. 1996 PRINTED IN JAPAN (IMPRIME AU JAPON)

I. PARTS TO BE REPLACED PERIODICALLY

No parts to be replaced periodically

II. CONSUMABLE PARTS

No consumable parts

COPYRIGHT © 1996 CANON INC. CANON DR-3020 REV.0 FEB. 1996 PRINTED IN JAPAN (IMPRIME AU JAPON)

CHAPTER 7

TROUBLESHOOTING

I. IMAGE ARE NOT OUTPUT 7-1
II. TROUBLESHOOTING 7-4
III. SERVICE MODE 7-8
VI. PROCESS FOR REPLACING ELECTRICAL PARTS 7-19

COPYRIGHT © 1996 CANON INC. CANON DR-3020 REV.0 FEB. 1996 PRINTED IN JAPAN (IMPRIME AU JAPON)

I. IMAGE ARE NOT OUTPUT

1	Images are not output (white blank, black blank, spotted)

Cause/Location	Step	Check Item	Result	Countermeasure
	1	Does image trouble occur on both sides?	YES	Carry out step 4 and subsequent steps.
			NO	Trouble on one side: Carry out steps 2 and 3.
LED for illuminating document	2	Does the LED on trouble side light up?	NO	Carry out steps listed in "LED does not light up on the faulty side."
Scanner unit	3	When the defective scanner unit is replaced, is the trouble resolved?	YES	End
CPU PCB ass'y			NO	Replace the CPU PCB ass'y.
Poor connection of interface cable	4	Is the interface cable between the main body and the external device securely connected to the interface connector of the printer?	NO	Securely insert the connector.
LED for illuminating document	5	Does the LED light up?	NO	Carry out steps in "LED does not light up."
Insufficient DC power	6	Is the DC power supplied?	NO	Carry out steps in "DC power does not come on."
CPU PCB ass'y	7	When the CPU PCB ass'y is replaced, is the trouble resolved?	YES	End
External devices			NO	Explain to the customer that this is not a problem with the machine, and ask to check the external devices.

COPYRIGHT © 1996 CANON INC.

2 Poor resolution

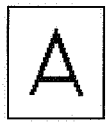

Cause/Location	Step	Check Item	Result	Countermeasure
Guide glass	1	Is the guide glass of the scanner unit contaminated?	YES	Clean the glass.
Scanner unit	2	Is the scanner unit is properly mounted?	NO	Remount the scanner unit properly.
CPU PCB			YES	Replace the CPU PCB ass'y.

3 Uneven image density, lines (horizontal direction)

Cause/Location	Step	Check Item	Result	Countermeasure
Guide glass	1	Is the guide glass of the scanner unit contaminated?	YES	Clean the glass.
Poor contact of connector	2	Are connectors J108 and J109 on the CPU PCB ass'y securely connected?	NO	Re-connect.
CPU PCB ass'y			YES	Replace the CPU PCB ass'y.

COPYRIGHT © 1996 CANON INC.
CANON DR-3020 REV.0 FEB. 1996 PRINTED IN JAPAN (IMPRIME AU JAPON)

4 Uneven image density, lines (vertical direction)

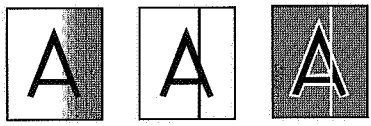

Cause/Location	Step	Check Item	Result	Countermeasure
Guide glass	1	Is the guide glass of the scanner unit contaminated?	YES	Clean the glass.
Poor shading correction	2	When the shading correction is repeated, is the trouble resolved?	YES	End
CPU PCB ass'y	3	When the CPU PCB ass'y is replaced, is the trouble resolved?	YES	End
Faulty scanner unit			NO	Replace the scanner unit on the faulty side.

COPYRIGHT © 1996 CANON INC.

II. TROUBLESHOOTING

1 AC power does not come on

Cause/Location	Step	Check Item	Result	Countermeasure
Power plug	1	Is the power cord plugged into the outlet?	NO	Insert the plug into the outlet
Power voltage	2	Is the specified voltage being supplied to the outlet?	NO	Explain to the customer that this is not a problem with the machine.
Power switch (SW1)	3	Is there continuity between the two terminals of the power switch?	NO	Replace the power switch (SW1).
			YES	Check a continuity of the power cord.

2 DC power does not come on

Cause/Location	Step	Check Item	Result	Countermeasure
Faulty AC power supply	1	Is the AC power supply being supplied to the AC inlet?	NO	Carry out the check items of "AC power does not come on."
Delivery assembly	2	Is the delivery assembly properly closed?	NO	Close the delivery assembly.
Delivery assembly open/close detection switch (SW2)	3	Does the multimeter read approximately 24 V when the ⊕ probe and ⊖ probe of the multimeter set at 50 VDC range are connected respectively to connectors J303-3 and J303-1 on the DC power supply PCB, and the power is turned on with the delivery unit open?	YES	Check the switch and the wiring from J303 to the delivery assembly open/close detection switch (SW2)
CPU PCB assembly	4	Are the specified voltages being output when the probes of a multimeter set at 50 VDC range are connected to the following connectors on the DC power supply PCB?	YES	Check the wiring from the DC power supply PCB to the CPU circuit. If there is no problem, replace the CPU PCB assembly.
DC power supply PCB assembly			NO	Replace the DC power supply PCB.

Connector	Terminal	Voltage
J301	2 ⊕ 1 ⊖	+24V
	4 ⊕ 3 ⊖	+5V
J302	1 ⊕ 2 ⊖	+12V
	3 ⊕ 4 ⊖	–12V

COPYRIGHT © 1996 CANON INC.
CANON DR-3020 REV.0 FEB. 1996 PRINTED IN JAPAN (IMPRIME AU JAPON)

3 Feeder clutch (CL1) does not operate

Cause/Location	Step	Check Item	Result	Countermeasure
Pick-up clutch (CL1)	1	Does the multimeter read approximately 24 V when the ⊕ probe and ⊖ probe of the multimeter set at 50 VDC range are connected respectively to the connectors J105-A1 and J105-A2 on the CPU PCB, and the document board motor turns off?	YES	Check the wiring from the CPU PCB to the feeder clutch (CL1). If there is no problem, replace the clutch.
CPU PCB assembly			NO	Replace the CPU PCB

4 Main motor (M1) does not rotate

Cause/Location	Step	Check Item	Result	Countermeasure
Defective DC power supply	1	Is the DC power supply being supplied to the main motor?	NO	Take corrective action referring to "2 DC power does not come on."
Main motor (M1)	2	Does the multimeter read approximately 5 V at the time of start of scanning when the ⊕ probe and ⊖ probe of the multimeter set at 50 VDC range are connected to connectors J107-A5 and J107-A7 on the CPU PCB, respectively?	YES	Check the wiring from the CPU PCB to the main motor. If there is no problem, replace the main motor.
CPU PCB assembly			NO	Replace the CPU PCB.

5 Document board motor (M2) does not rotate

Cause/Location	Step	Check Item	Result	Countermeasure
Document board load	1	Is there any load in the drive system from the document board motor (M2) to the document board?	YES	Remove the load.
Document board motor (M2)	2	Does the multimeter read approximately 24 V at the time of start of scanning when the ⊕ probe and ⊖ probe of the multimeter set at 50 VDC range are connected respectively to connectors J202-1 and J202-2 on the connector PCB?	YES	Check the wiring from the connector PCB to the document board motor (M2). If there is no problem, replace the clutch.
Connector PCB assembly	3	Does the multimeter read approximately 24 V at the time of start of scanning when the ⊕ probe and ⊖ probe of the multimeter set at 50 VDC range are connected respectively to connectors J110-A2 and J110-A4 on the CPU PCB?	YES	Check the wiring from the CPU PCB to the connector PCB. If there is no problem, replace the connector PCB.
CPU PCB			NO	Replace the CPU PCB.

COPYRIGHT © 1996 CANON INC.

6 Manual selector solenoid (SL1) does not operate

Cause/Location	Step	Check Item	Result	Countermeasure
Manual selector solenoid (SL1)	1	Does the multimeter read approximately 24 V when the ⊕ probe and ⊖ probe of the multimeter set at 50 VDC range are connected respectively to connectors J206-1 and J206-3 on the connector PCB, and the document is picked up manually?	YES	Check the wiring from the connector PCB to the manual selector solenoid (SL1). If there is no problem, replace the solenoid.
Connector PCB	2	Does the multimeter read approximately 24 V when the ⊕ probe and ⊖ probe of the multimeter set at 50 VDC range are connected respectively to connectors J110-A11 and J110-A9 on the CPU PCB, and the document is picked up manually?	YES	Check the wiring from the CPU PCB to the connector PCB. If there is no problem, replace the connector PCB.
CPU PCB			NO	Replace the CPU PCB

7 Front LED does not light up

Cause/Location	Step	Check Item	Result	Countermeasure
Front LED	1	Does the multimeter read approximately 24 V when the ⊕ probe and ⊖ probe of the multimeter set at 50 VDC range are connected respectively to connectors J404-1 and J404-2 on the front BASIS driver PCB, and the document is scanned?	YES	Check the wiring from the front BASIS driver PCB to the front LED. If there is no problem, replace the front scanner unit.
Front scanner unit	2	Does the multimeter read approximately 24 V when the ⊕ probe and ⊖ probe of the multimeter set at 50 VDC range are connected respectively to connectors J106-A7 and J106-A5 on the CPU PCB, and the document is scanned?	YES	Check the wiring from the CPU PCB to the front BASIS driver PCB. If there is no problem, replace the front scanner unit.
CPU PCB			NO	Replace the CPU PCB.

COPYRIGHT © 1996 CANON INC. CANON DR-3020 REV.0 FEB. 1996 PRINTED IN JAPAN (IMPRIME AU JAPON)

8 Back LED does not light up

Cause/Location	Step	Check Item	Result	Countermeasure
Back LED	1	Does the multimeter read approximately 24 V when the ⊕ probe and ⊖ probe of the multimeter set at 50 VDC range are connected respectively to connectors J404-1 and J404-2 on the front BASIS driver PCB, and the document is scanned?	YES	Check the wiring from the back BASIS driver PCB to back LED. If there is no problem, replace the back scanner unit.
Back scanner unit	2	Does the multimeter read approximately 24 V when the ⊕ probe and ⊖ probe of the multimeter set at 50 VDC range are connected respectively to connectors J207-7 and J207-5 on the connector PCB, and the document is scanned?	YES	Check the wiring from the connector PCB to back BASIS driver PCB. If there is no problem, replace the back scanner unit.
Connector PCB	3	Does the multimeter read approximately 24 V when the ⊕ probe and ⊖ probe of the multimeter set at 50 VDC range are connected respectively to connectors J110-A11 and J110-A7 on the CPU PCB, and the document is picked up manually?	YES	Check the wiring from the CPU PCB to the connector PCB. If there is no problem, replace the connector PCB.
CPU PCB			NO	Replace the CPU PCB

COPYRIGHT © 1996 CANON INC.

III. SERVICE MODE

A. Outline

The following comprise the service mode of this machine.

- Mode for displaying light intensity data for shading correction
  Displays the data detected by each sensor of BASIS when correcting shading.
- Shading correction executing mode
  Carries out shading correction and automatically writes the data in DR-3020.
- Document detecting sensor position adjusting mode
  Adjusts the position of the document width detecting sensor and automatically writes the data in DR-3020.
- Registration adjusting mode
  Adjusts registration and automatically writes the data in DR-3020.
- Input port indicating mode
  Indicates the state of input of each sensor.
- Port access mode
  Checks the operation of each DC load.
- Image display mode
  Scans the document and displays the image on the personal computer screen.

B. Use of Service Mode

DR-3020 itself does not have any service mode functions. Therefore, when starting up service mode, the following items are required.

1. Service Mode Program
   Tool No.: MG1-2625-000
   (3.5 type floppy disk)
2. Personal Computer
   IBM PC/AT compatible machine
   - SCSI driver I/F : WINASPI
   - OS : Windows 3.1®
   - CPU : 386, 33 MHz or more
   - Memory size : 8 MB or more
   - Available HD capacity : 10 MB or more

Note: Do not start up service mode with the user's personal computer. Always, use a personal computer exclusive with service mode.

COPYRIGHT © 1996 CANON INC.
CANON DR-3020 REV.0 FEB. 1996 PRINTED IN JAPAN (IMPRIME AU JAPON)

C. Tool Installation

1. Turn on the personal computer.
2. Display the DOS prompt.
3. Insert the tool floppy disk into the floppy disk drive.
4. Copy the floppy disk file on to the hard disk.
   COPY A:3020TOOL.EXE ↵
5. Check installation.
6. Start WINDOWS.
   WIN ↵
7. Open File Manager and check that [3020TOOL] is in there.

D. Service Mode

1. Starting up Service Mode

a. Turn on DR-3020.
b. Start up WINDOWS.
   WIN ↵
c. Open File Manager, and open [3020TOOL].
d. The Service Mode screen displays as in Figure 6-1.

COPYRIGHT © 1996 CANON INC.

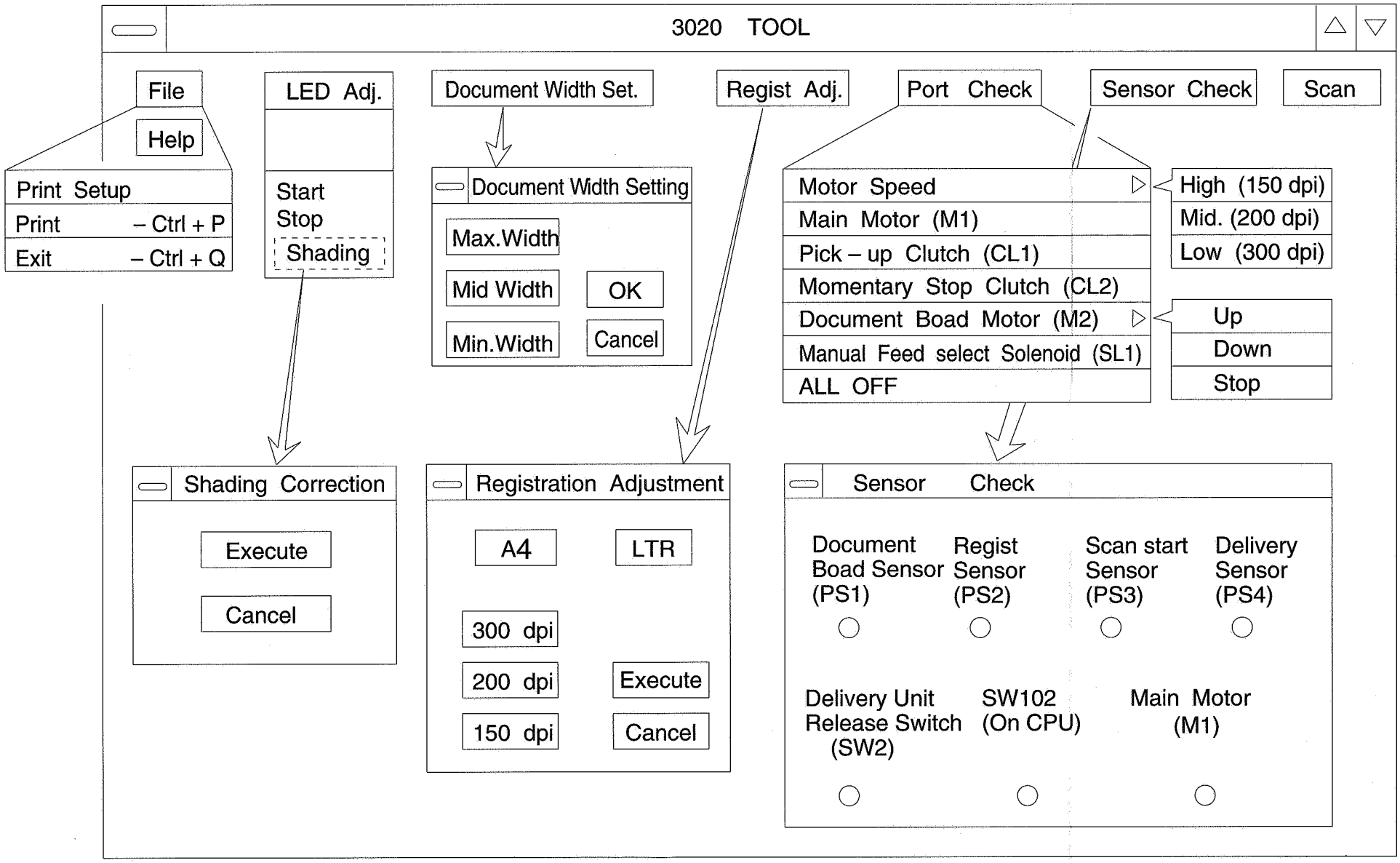

Figure 7-1

COPYRIGHT © 1996 CANON INC.

2. Shading Correction

a. Cover the entire glass surface of the upper and lower scanner unit of DR-3020 with one sheet of standard white paper (FY9-3004-020), and close the delivery assembly.
b. Select [Start] from [Shading Adj.] of the menu screen.
c. Scanning starts and the density (data) of the standard white paper will be displayed on the personal computer screen.
d. Turn VR101 through VR104 on the CPU PCB assembly to adjust so that the waveform coincides with the reference line. (Do not excessively shift the waveform upwards; this will cause the waveform to saturate.)
   VR101: For adjusting former half of front side BASIS (left side of upper waveform)
   VR102: For adjusting latter half of front side BASIS (right side of upper waveform)
   VR103: For adjusting former half of back side BASIS (left side of lower waveform)
   VR104: For adjusting latter half of back side BASIS (right side of lower waveform)
   Data waveform can be printed out by selecting [Print] from [File] of the menu screen.
e. Cover the entire glass surface of the scanner unit with three sheets of standard white paper (FY9-3004-020) placed on top of each other, and close the delivery assembly.
f. Select [Shading] from [Shading Adj.] of the menu screen.
g. When carrying out shading correction, press [Execute].

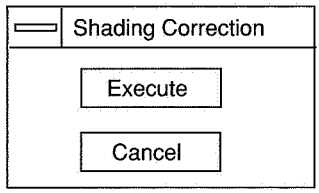

Figure 7-3

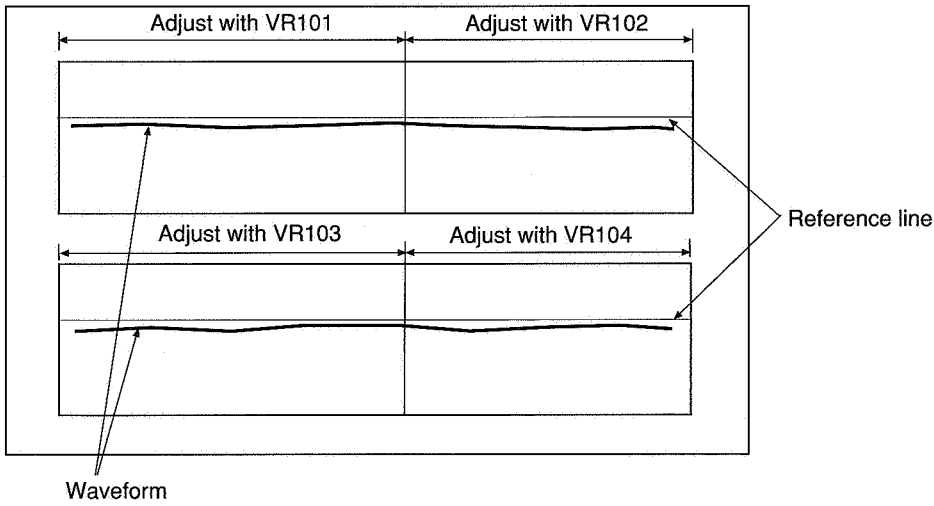

Figure 7-2

COPYRIGHT © 1996 CANON INC.

h. Shading correction will be carried out for about one minute and the shading correction data will be written into the CPU PCB memory.

Reference: When adjusting with synchroscope:

a. Cut standard white paper (FY9-3004-020) to a width of about 150 mm and place it in the center of the glass surface of the upper and lower scanner unit.
b. Connect the synchroscope probes to check pins J111-1 - J111-4 on the CPU PCB, and adjust so that the white paper (standard white paper) part becomes 1.6V.
Connect GND to J111-6.

VR No.	Check Pin No.
VR101	J111-1
VR102	J111-2
VR103	J111-3
VR104	J111-4

Table 7-1

c. After adjusting is finished, cover the entire glass surface of the upper and lower scanner unit with three sheets of standard white paper, and close the delivery assembly.
d. The subsequent steps are the same as when the work is being done via a personal computer.

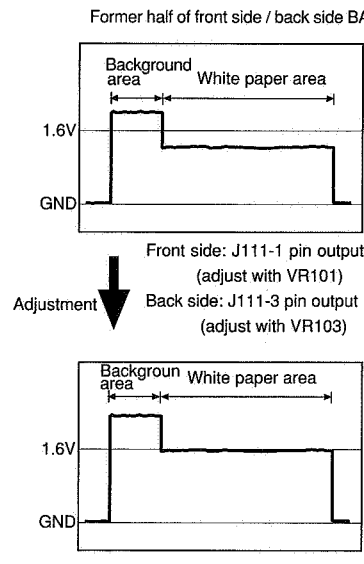

Figure 7-4

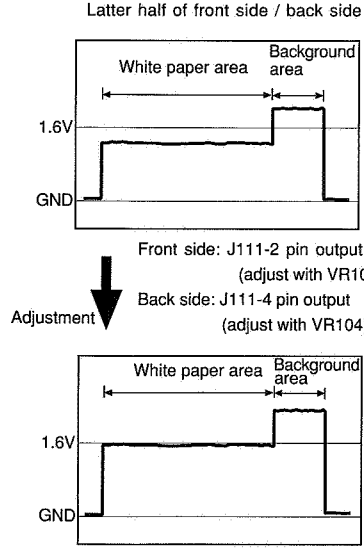

Figure 7-5

COPYRIGHT © 1996 CANON INC.
CANON DR-3020 REV.0 FEB. 1996 PRINTED IN JAPAN (IMPRIME AU JAPON)

3. Adjusting Document Width Detecting Sensors

When doing this adjustment, prepare a sheet of thick paper 160 mm wide.

a. Select [Document Width Set.] from the menu screen.

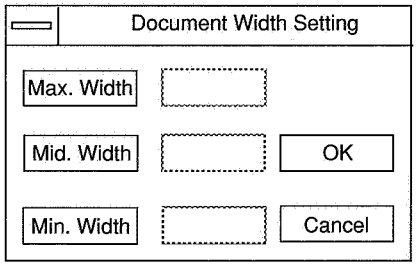

Figure 7-6

b. Widen the document guide plate fully and select [Max. Width].
   The width value will be displayed on the right.
c. Set the 160 mm wide thick paper on the document board, match the document guide plate to it, and select [Mid. Width]
   The value will be displayed on the right.
d. Narrow the document guide plate fully and select [Min. Width].
   the value will be displayed on the right.
e. If OK, select [OK]. The value of the sensed document width will be written in the memory of the CPU PCB. It will be over in a few seconds.

Reference: The figures indicated to the right of [Max. Width], [Mid. Width], and [Min. Width] are values output from the sensor of the document guide plate.

These values have to be [Max. Width] > [Mid. Width] > [Min. Width] and moreover the value of [Mid. Width] has to be approximately midway between the values of [Max. Width] and [Min. Width]. If these figures do not meet the above conditions, then it is possible that there is something wrong with the sensor.

COPYRIGHT © 1996 CANON INC.

4. Adjusting Registration

a. Place an A4 size or letter size copy paper on the document board.
b. Select [Registration Adjustment] from the menu screen.

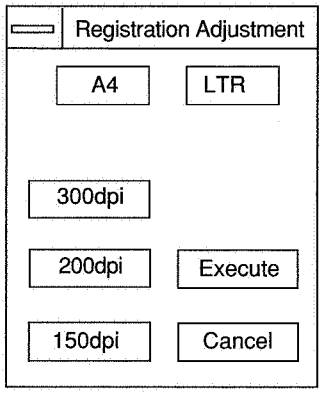

Figure 7-7

c. Select [A4] when A series documents are being used, and [LTR] when Letter series documents are being used.
d. Press [300 dpi]. The copy paper is fed and the registration data will be calculated.
e. Place the copy paper again on the document board and select [200 dpi]. The copy paper is fed and the registration data will be calculated.
f. Place the copy paper again on the document board and select [150 dpi]. The copy paper is fed and the registration data will be calculated.
g. When the work is finished, select [Execute]. The registration adjusting value will be written into the memory of the CPU PCB. It is over in a few seconds.

COPYRIGHT © 1996 CANON INC.
CANON DR-3020 REV.0 FEB. 1996 PRINTED IN JAPAN (IMPRIME AU JAPON)

5. Port Check

a. Select [Port Check] from the menu screen.
The following DC loads can be checked.
- [Motor Speed]
The speed of the motor can be switched in three stages.
High speed : [High] (150)
Medium speed : [Mid.] (200)
Low speed : [Low] (300)
- [Main Motor (M1)]
ON/OFF of main motor (M1)
- [Pick-up Clutch (CL1)]
ON/OFF of paper pick-up clutch (CL1)
- [Momentary Stop Clutch (CL2)]
ON/OFF of momentary stop clutch (CL2)
- [Document Board Motor (M2)]
Drives the document board motor (M2) and moves the document board up and down.
Ascend : [Up]
Descend : [Down]
Stop : [Stop]
- [Manual Feed Select Solenoid (SL1)]
ON/OFF of manual feed select solenoid
- [All OFF]
Stops all DC loads.

6. Sensor check

a. Select [Sensor Check] from the menu screen.

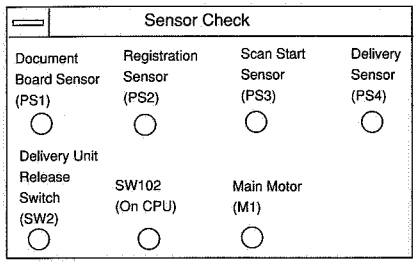

Figure 7-8

b. ON/OFF state of each sensor can be checked.
- [Document Board Sensor (PS1)]
Document board sensor
- [Registration Sensor (PS2)]
Registration sensor
- [Scan Start Sensor (PS3)]
Scan start sensor
- [Delivery Sensor (PS4)]
Paper delivery sensor
- [Delivery Unit Release Switch (SW2)]
Delivery unit release switch
- [SW102 (On CPU PCB)]
Push switch SW102 on CPU PCB
- [Main Motor (M1)]
State of drive of main motor

c. When a sensor goes ON, the corresponding ○ in the display changes to ●.
This check can be done jointly with 5. Port Check.

COPYRIGHT © 1996 CANON INC. CANON DR-3020 REV.0 FEB. 1996 PRINTED IN JAPAN (IMPRIME AU JAPON)

7. Feed/Image Display Check

a. Place a double-sided document on the document board.
b. Select [Scan] from the menu screen.
c. The document will be fed at 300 lpi and the image will be displayed on the personal computer.

8. Tool Version Display

a. Select [Help] on menu screen.
b. Version screen will be displayed.
c. If [OK] is selected, screen will return to the menu screen.

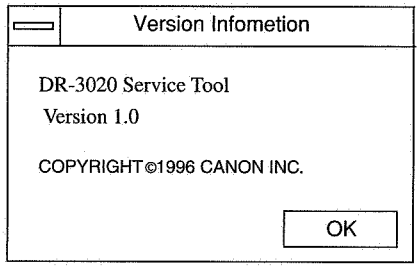

Figure 7-9

COPYRIGHT © 1996 CANON INC.
CANON DR-3020 REV.0 FEB. 1996 PRINTED IN JAPAN (IMPRIME AU JAPON)

VI. PROCESS FOR REPLACING ELECTRICAL PARTS

A. Outline

In the electrical parts used in this machine, there are some that will not properly exhibit the functions of this machine merely by replacing the parts.

- CPU PCB.
- Scanner unit (front side and back side)
- Document width detecting sensor

Caution: Always turn off the power before replacing electrical parts.

B. CPU PCB

a. Before replacing, make a note of the SCSI ID number.
b. After replacing the CPU PCB, set the SCSI ID.
c. Carry out registration adjustment (refer to Page 7-16)
d. Carry out shading correction (refer to Page 7-13)
e. Adjust the document width position sensor (refer to Page 7-15).

C. Scanner Unit

a. Carry out shading correction (refer to Page 7-13)

D. Document Width Detecting Sensor

a. Adjust the document width position sensor (refer to Page 7-15).

COPYRIGHT © 1996 CANON INC.

APPENDIX

I. LIST OF SIGNALS AND COMMANDS A-1
II. GENERAL TIMING CHART A-3
III. GENERAL CIRCUIT DIAGRAM A-5
IV. CONNECTOR CIRCUIT DIAGRAM A-7
V. BASIS DRIVE CIRCUIT DIAGRAM A-9
VI. SCANNING START SENSOR CIRCUIT DIAGRAM A-11
VII. LIST OF SPECIAL TOOLS A-12
VIII. SOLVENT/OIL TABLE A-13

COPYRIGHT © 1996 CANON INC. CANON DR-3020 REV.0 FEB. 1996 PRINTED IN JAPAN (IMPRIME AU JAPON)

I. LIST OF SIGNALS AND COMMANDS

This section lists the abbreviations of signals and commands used in this manual and circuit diagrams, and explains their meanings.

PPUD	Paper Pick-Up Drive command
LED_A	front side LED drive command
PDP1	Paper Detection signal 1
PDP3	Paper Detection signal 3
Vout1	BASIS analog Voltage out put signal 1
Vout2	BASIS analog Voltage out put signal 2
Vref	BASIS drive reference Voltage
SP	Sift Pulse signal
CLK	CLocK
DCBD1	DoCument Board Drive motor command 1
DCBD2	DoCument Board Drive motor commend 2
PDP2	Paper Detection signal 2
PAUD	Paper pAUse Drive command
LED_B	back side LED drive command
RES	REServe
MFSD	Manual Feed Solenoid Drive command
DWID	Document WIDth detection signal
PDP4	Paper Detection signal 4
MOTD	MOTor Drive command
SPEED-A	SPEED select signal A
SPEED-B	SPEED select signal B
M_LOCK	Motor LOCK signal

COPYRIGHT © 1996 CANON INC. CANON DR-3020 REV.0 FEB. 1996 PRINTED IN JAPAN (IMPRIME AU JAPON)

II. GENERAL TIMING CHART

When two sheets are fed

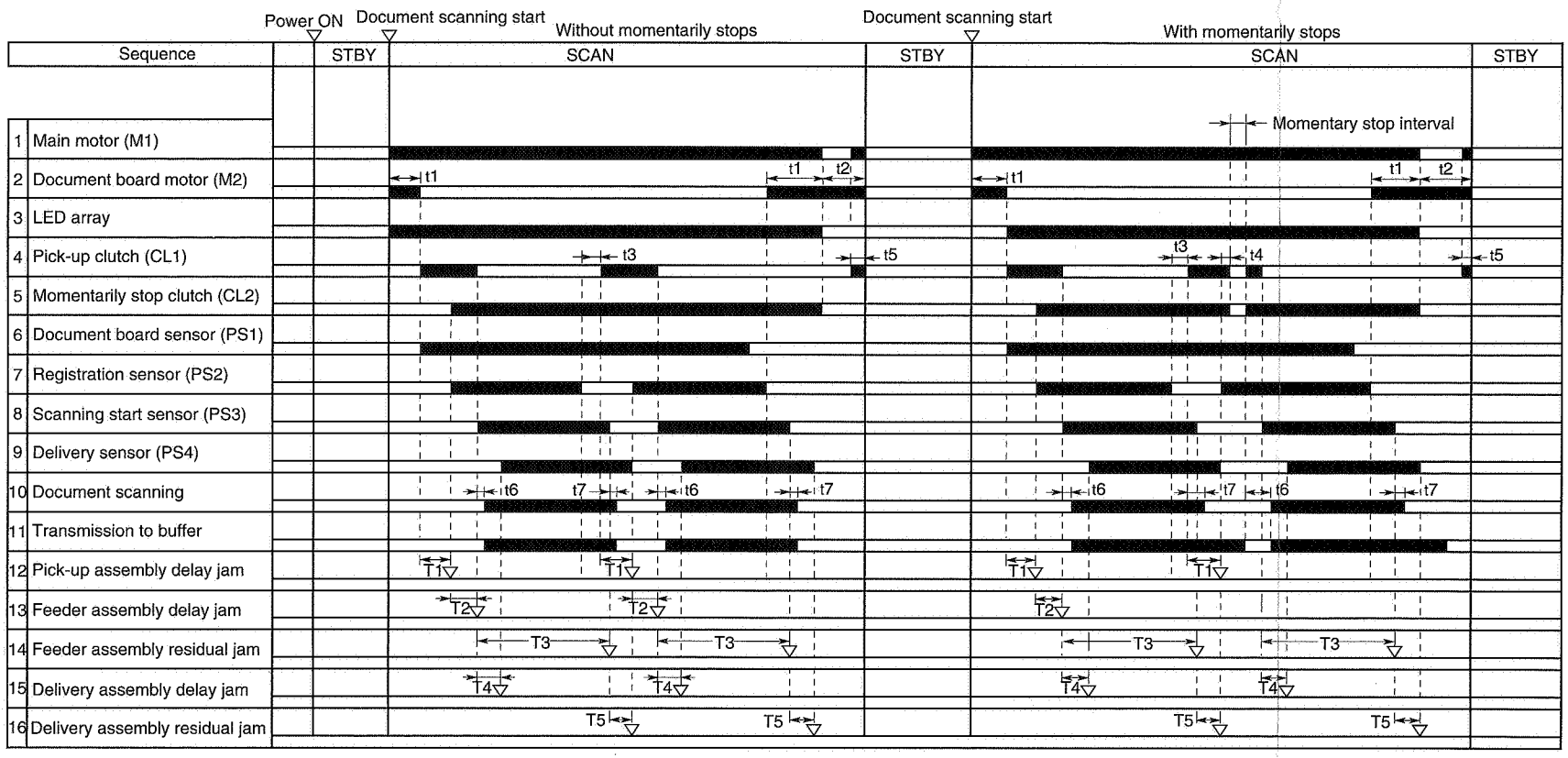

COPYRIGHT © 1996 CANON INC.

III. GENERAL CIRCUIT DIAGRAM

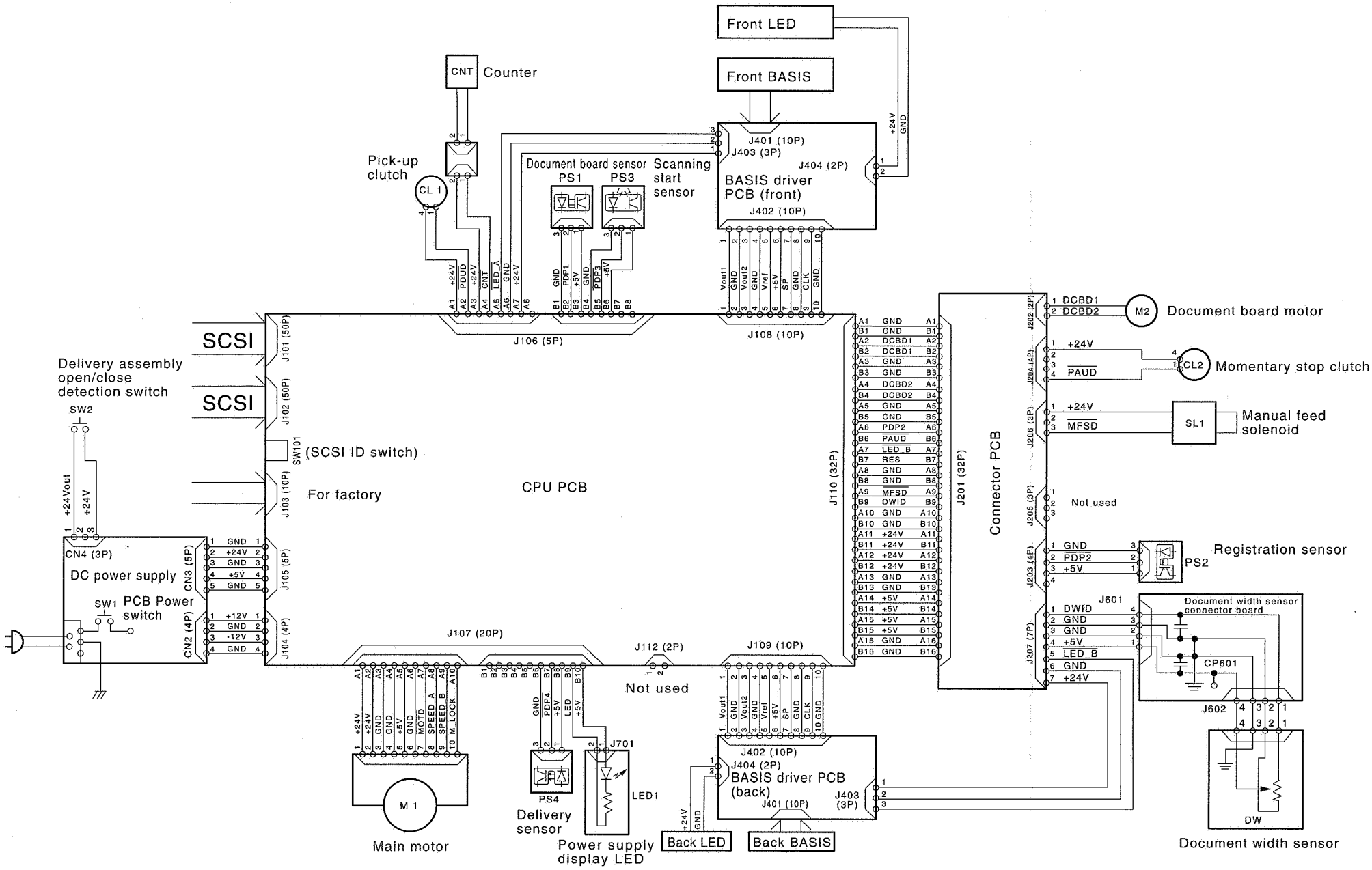

COPYRIGHT © 1996 CANON INC.

CANON DR-3020 REV.0 FEB. 1996 PRINTED IN JAPAN (IMPRIME AU JAPON)

IV. CONNECTOR CIRCUIT DIAGRAM

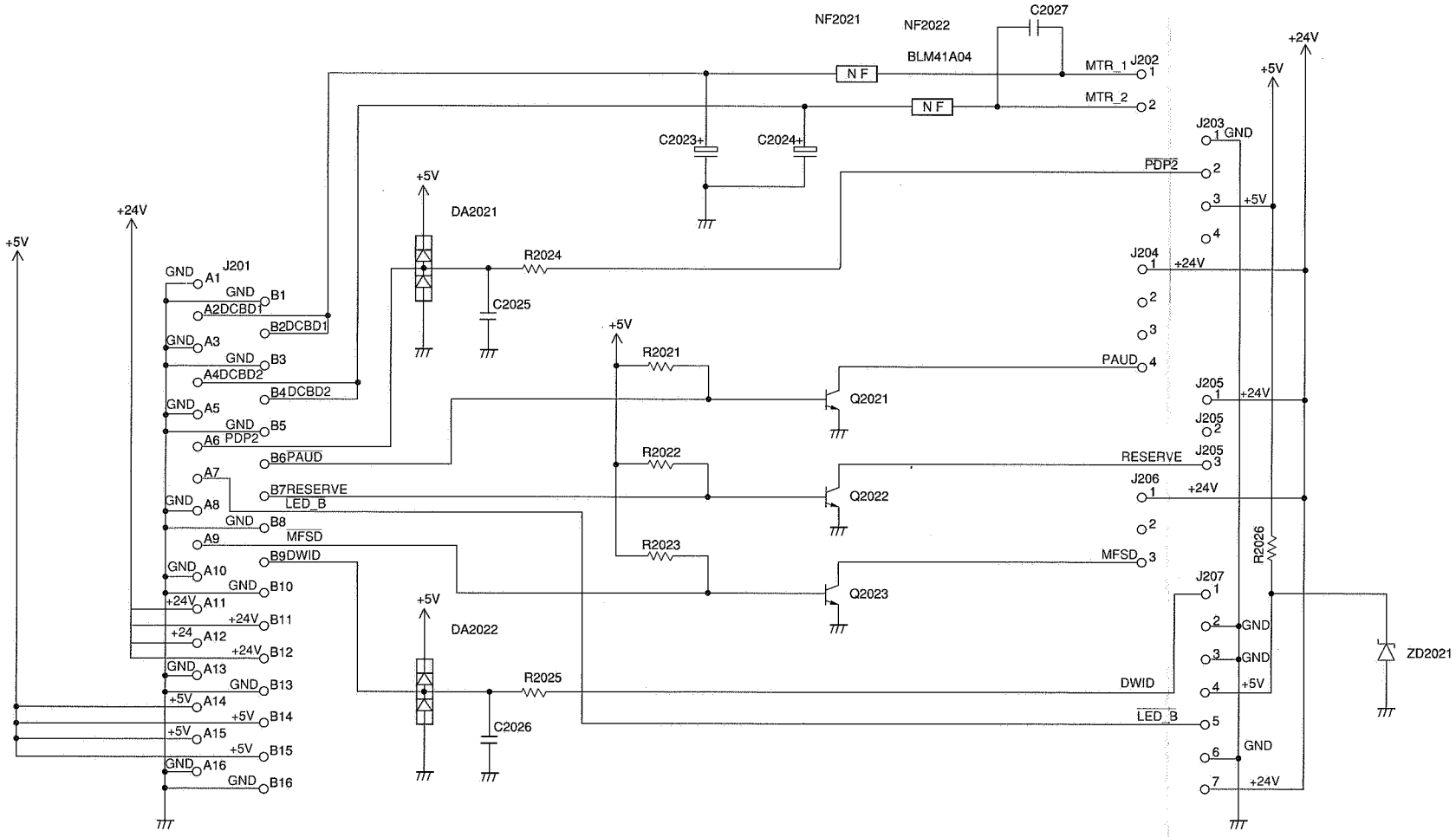

COPYRIGHT © 1996 CANON INC.

V. BASIS DRIVE CIRCUIT DIAGRAM

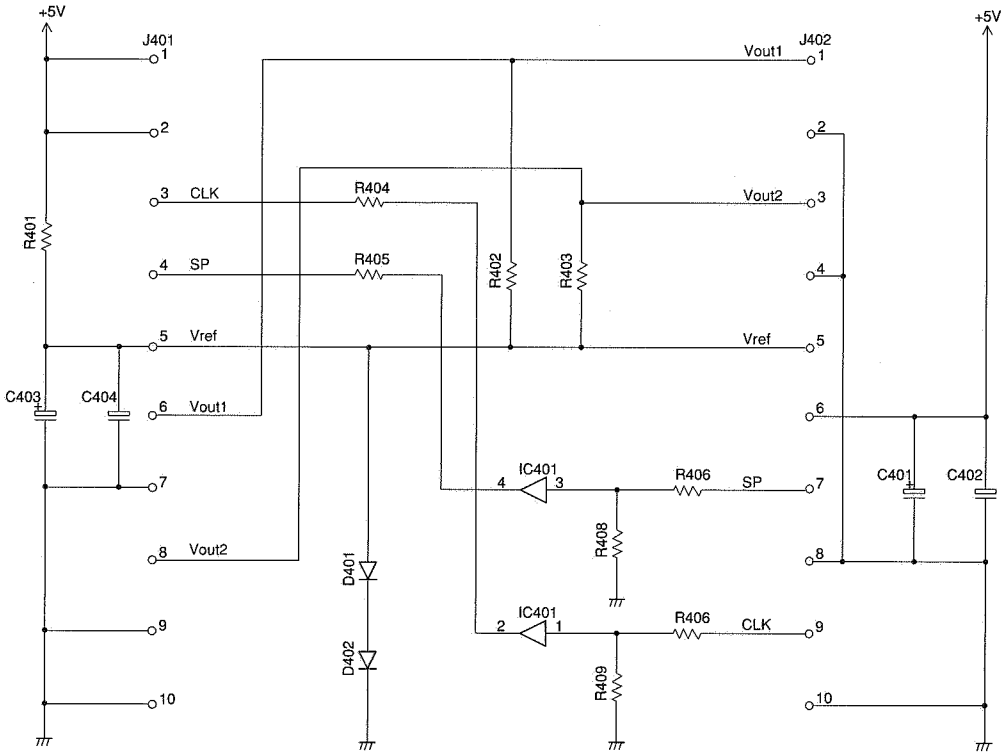

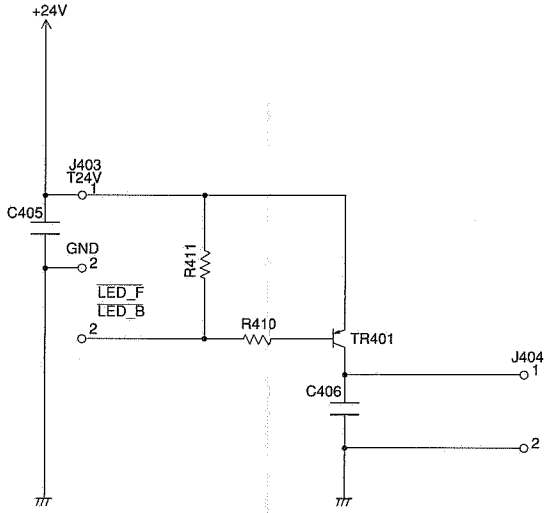

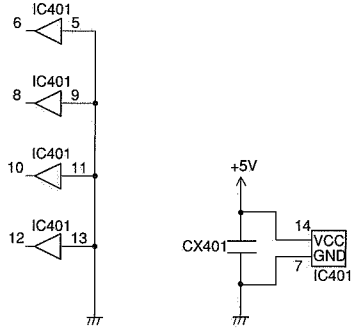

COPYRIGHT © 1996 CANON INC.

VI. SCANNING START SENSOR CIRCUIT DIAGRAM

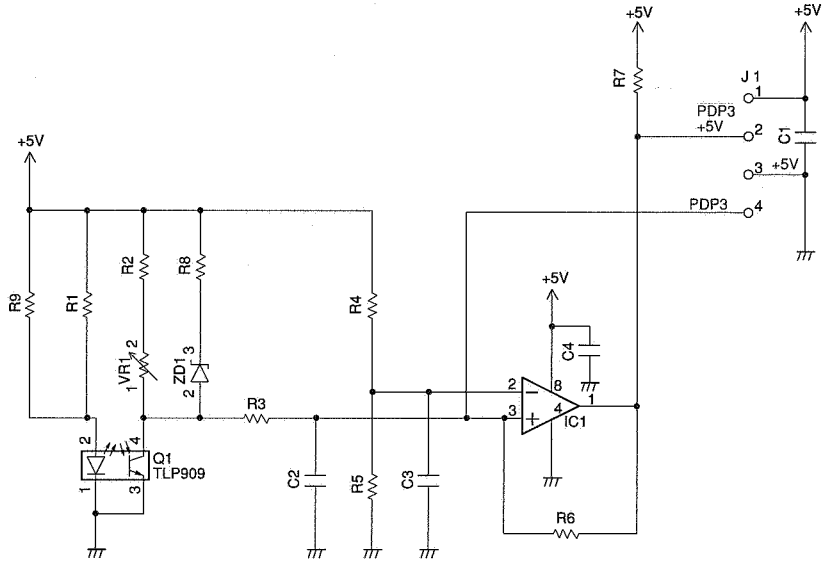

VII. LIST OF SPECIAL TOOLS

Special tools which are required for servicing this machine in addition to the standard tool set are listed below.

No.	Tool name	Tool No.	Shape	Rank	Purpose/Remarks
1	Test sheet set	TKM-0271	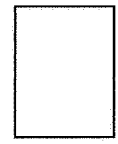	A	10 sheets/(1) set
2	Check program	MG1-2625	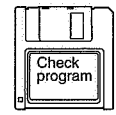	B	• Service mode execution program • 3.5 floppy disk
3	PC/AT compatible personal computer	—		B	To be prepared by each service engineer In addition, SCSI driver I/F of WIN ASPI is needed.
4	Standard white paper	FY9-3004	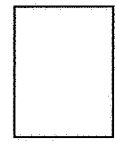	B	• For shading correction • 20 sheets/(1) set

Note: Rank

A: Each service technician should carry one with him.

B: A group of five service technicians should share one.

C: Each workshop should keep one.

COPYRIGHT © 1996 CANON INC.
CANON DR-3020 REV.0 FEB. 1996 PRINTED IN JAPAN (IMPRIME AU JAPON)

VIII. SOLVENT/OIL TABLE

No.	Name	Application	Composition	Remarks
1	Ethylalcohol (Ethanol) Isopropyl alcohol (Isopropanol)	Cleaning: Glass, plastic, rubber, external covers	C_2H_5OH $(CH_3)_2$ CHOH	• Do not bring near fire. • Procure locally. • Substitutes: C1, IPA (isopropyl alcohol)
2	MEK	Cleaning: Metal portions, oil smudges, toner smudges	Mineral oil-based hydrocarbons, chlorine-based hydrocarbon, alcohol	• Do not bring near fire. • Procure locally • Substitutes: MEK
3	Heat resistant grease	Drive portion	Mineral oil-based lithium soap Molybdenum disulfide	• Vitasol MO-138S (manufactured by Hitachi Powdered Mill) • Tool No. CK-0427 (5500 g/can)
4			Mineral oil (paraffin-based)	• Uniway 68 (manufactured by Nikon Sekiyu) • Substitutes: Suwaway S68 (manufactured by Maruzen Sekiyu) Mobil Vactra Oil No. 2 (manufactured by Mobil Oil)
5	Lubricating oil		Mineral oil (paraffin-based)	• Uniway 220 (manufactured by Nihon Sekiyu) • Tool No. CK-0524 (100 cc) • Substitutes: Suwaway S180 (manufactured by Maruzen Sekiyu)

COPYRIGHT © 1996 CANON INC.

Prepared by

Quality Assurance Center
Canon Electronics Inc.

Printed in Japan

FIRST EDITION (MAY 1998) [63999]

1248 Shimokagemori, Chichibu-shi
Saitama 369-1892, Japan

Canon

The publication is printed on
70% reprocessed paper.

PRINTED IN JAPAN (IMPRIME AU JAPON)

0600AB0.10-6

DR-3020

PARTS CATALOG

REVISION 0

100V 50/60Hz	M11-0231
120V 50/60Hz	M11-0233
220V 50/60Hz	M11-0234
240V 50/60Hz	M11-0234

Canon

MAR. 1996 MY8-3186-000

A02

COPYRIGHT©1996 CANON INC. CANON DR-3020 REV.0 MAR. 1996 PRINTED IN JAPAN (IMPRIME AU JAPON)

序

このパーツ・カタログは，DR-3020 に対するサービス部品調達の手引として発行します。
サービス部品の要求は、キヤノン販売営業所にお願い致します。
製品に大きな変更がある場合は，改訂版のパーツ・カタログを発行しますが，その他の場合は随時新しい情報をお届けします。
このパーツ・カタログは当社映像事務機 TS 推進 2 課が発行管理を行っています。

キヤノン株式会社
映像事務機品質保証センター
映像事務機TS推進部
映像事務機TS推進2課

PREFACE

This Parts Catalog contains listings of parts used in the DR-3020.
Diagrams are provided with the listings to aid the service technician in identifying clearly, the item to be ordered.

Whenever ordering parts, consult this Parts Catalog for all of the information pertaining to each item. Be sure to include in the Parts Request, the full item description, the item part number and the quantity.

Qffice Imaging Products Technical Support Dept.2
Office Imaging Products Technical Support Div.
Office Imaging Products Quality Assurance Center.
Canon Inc.

版権所有，無断転載，引用を禁ず。
Copyright © 1996 Canon Inc.
Printed in Japan
Imprime au Japon

本マニュアルについては，機密保持等その取扱には十分注意して下さい。
万一取扱を誤まりますと法律で処罰されることがあります。

Use of this manual should be strictly supervised toavoid disclosure of confidential information.

A03

目　　次

イラスト　リスト

A	主要部品配置図	1F-C01	
B	イラスト索引	1F-D01	
100	外装カバー部	1F-E01	1F-E02
150	本体機械内部－1	1F-E03	1F-E04
151	本体機械内部－2	1F-E05	1F-E06
152	本体機械内部－3	1F-E07	1F-E08
200	原稿積載板部	1F-E09	1F-E10
210	原稿台昇降部	1F-E11	1F-E12
220	給紙部－1	1F-E13	1F-E14
221	給紙部－2	1F-F01	1F-F02
230	排紙部	1F-F03	1F-F04
240	分離ガイド板部	1F-F05	1F-F06
300	上部ユニット	1F-F07	1F-F08
900	中継回路基板	1F-F09	1F-F10
901	給紙センサ回路基板	1F-F11	1F-F12
902	LED 回路基板	1F-F13	1F-F14
903	紙幅検知中継回路基板	1F-G01	1F-G02
C	部品索引表	2F-A02 ～ A04	
D	機械標準部品一覧表	2F-B01 ～ C03	

A04

COPYRIGHT©1996 CANON INC.　CANON DR-3020 REV.0 MAR. 1996 PRINTED IN JAPAN (IMPRIME AU JAPON)

CONTENTS

		ILLUST	LIST
A	ASSEMBLY LOCATION DIAGRAM	1F-C01	
B	INDEX OF FIGURES	1F-D01	
100	EXTERNAL COVERS	1F-E01	1F-E02
150	INTERNAL COMPONENTS-1	1F-E03	1F-E04
151	INTERNAL COMPONENTS-2	1F-E05	1F-E06
152	INTERNAL COMPONENTS-3	1F-E07	1F-E08
200	PICK-UP TRAY ASSEMBLY	1F-E09	1F-E10
210	PICK-UP TRAY UP-DOWN ASSEMBLY	1F-E11	1F-E12
220	PICK-UP ASSEMBLY-1	1F-E13	1F-E14
221	PICK-UP ASSEMBLY-2	1F-F01	1F-F02
230	DELIVERY ASSEMBLY	1F-F03	1F-F04
240	SEPARATION GUIDE PLATE ASSEMBLY	1F-F05	1F-F06
300	UPPER ASSEMBLY	1F-F07	1F-F08
900	CONNECTOR PCB ASSEMBLY	1F-F09	1F-F10
901	PICK-UP SENSOR PCB ASSEMBLY	1F-F11	1F-F12
902	LED PCB ASSEMBLY	1F-F13	1F-F14
903	DOCUMENT WIDTH CONNECTOR PCB ASSEMBLY	1F-G01	1F-G02
C	NUMERICAL INDEX	2F-A02 ~ A04	
D	LIST OF STANDARD FASTENERS	2F-B01 ~ C03	

A05

COPYRIGHT©1996 CANON INC. CANON DR-3020 REV.0 MAR. 1996 PRINTED IN JAPAN (IMPRIME AU JAPON)

パーツカタログの見方

主要部品配置図について

部品図番号(Figure No.) および各アセンブリの位置を捜すとき，主要部品配置図を用います。

図中 [ ] 内は部品図名称，( ) 内は部品図番号を示しています。

部品番号の捜し方

どのアセンブリに使用されている部品かを，主要部品配置図で調べその部品図番号(Figure No.) のページをめくります。

部品図の中からその部品をみつけ，そのキー No. を部品番号リストの中から捜し出せば，部品番号・部品名称を知ることができます。なお，全製品に共通して使われているネジ，ナット，ワッシャ，止め輪，ピンおよびスペーサについては部品図上にアルファベット1桁と数字2桁の計3桁のキー No. を用いて表示していますので C. 機械標準部品一覧表にて部品番号を調べてください。

注：電源電圧・周波数等の仕様が異なる場合は，同一のキー No. に複数の部品番号が記されているので "SERIAL NUMBER/REMARKS 欄" を注意して見るようにしてください。

部品番号リストについて

部品番号リストの内容項目は次のとおりです。

(1)部品図番号およびキー No. (FIGURE & KEY No.)

部品図番号は，各部品番号リスト欄の左上に示してあり，各部品図に対応しています。

また，キー No. は，部品図中に示してある個々の部品に対応します。

(2)部品番号 (PART No.)

リストの2番目の欄には，部品番号が示してあります。

部品を発注する際は，必ずこの番号を明示してください。

NPN と記載されている部品・アセンブリには部品番号がなく，在庫もされていません。つまり供給できない部品です。

注：部品番号の末尾3桁を訂番といいます。部品改良等の目的で部品の一部が変更になった場合，訂番が変わることがあります。

これらの変更については，技術情報 (Service Information) で随時連絡されますので，常にこれらの情報も注意深く読むよう心がけてください。

(3)ラ ン ク (RANK)

Nと記載されている部品はサービスパーツに設定されていますが，在庫はされていません。

注文を受けてからの受注生産になります。

(4)使用個数 (Q'TY)

4番目の使用個数欄に示してある数字は，各部品図中における各部品の使用数量を示しています。

ただし，アセンブリの使用個数は，機械1台当りの数量を示します。

使用個数欄には数字の他に以下のアルファベット文字も表示されています。

RF ……参考としてリストアップしているもの

AR ……数量を限定せず，組立時に必要に応じた数量を使用するもの，および個数の明記できないもの

(5)部品名称 (DESCRIPTION)

個々の部品の名称が英文と和文で記されています。部品発注の際，部品名称も必ず明示してください。

電気部品等の主な仕様・型番は，英文の末尾に記しているものもあります。

A06

COPYRIGHT©1996 CANON INC. CANON DR-3020 REV.0 MAR. 1996 PRINTED IN JAPAN (IMPRIME AU JAPON)

(6)機体番号／備考（SERIAL NUMBER/ REMARKS）

電源電圧・周波数等の仕様の違いがある場合に，その違いを言葉あるいは機体番号の最上位桁のアルファベット（1文字，または2文字）の略号で表示しています。

略号の表示例

機体番号　AB0000001
　　└Aのみ表示する。

また，製品の変更により部品の互換性がない場合に，その部品の適用できる機体番号を表示しています。

これらの表示のないものについてはすべての機械に適用できます。

コネクター一覧表

製品に使用されているコネクタでサービスパーツに設定されている部品の部品番号をコネクタ番号順に示してあります。

ただし，コネクタのハウジングと端子が一体になっているものについては端子欄に部品番号を記載しておりません。

また，プリント回路基板上のコネクタについてはPCBと表示してありますのでプリント回路基板の部品リストで部品番号を捜してください。

機械標準部品一覧表

複写機全製品（オプションを含む）に共通して使われているネジ，ナット，ワッシャ，止め輪，ピン，およびスペーサを一覧表にまとめたものです。

これらの部品は各部品図の中では通常のキーNo.と異なり頭にアルファベットを付けた3桁で表示しています。

なお，これらの部品は部品図に対応した部品番号リストには記載されておりません。

機械標準部品一覧表は製品別パーツカタログとは別のリビジョンNo.をつけており，前版に対して新たに追加された部品はキーNo.の左に＊マークを付け，表示しています。

部品索引（NUMERICAL INDEX）

部品番号の索引が巻末にあります。

部品番号がわかっていて，使用箇所を調べる場合に活用できます。

索引表の左の欄が部品番号（PART No.），右の欄が部品番号（FIGURE No.）とキーNo.（KEY No.）を示しています。

なお，機械標準部品一覧表に記載されている部品番号は含まれていません。

A07

COPYRIGHT©1996 CANON INC. CANON DR-3020 REV.0 MAR. 1996 PRINTED IN JAPAN (IMPRIME AU JAPON)

HOW TO USE PARTS LISTS

Assembly Location Diagrams. These diagrams show the locations of major assemblies of the copier. Their names are identified in rectangular boxes. Below each box is the number of the Figure which shows an exploded view of the assembly.

Finding a Parts Number. Refer to the Assembly Location Diagrams and find the Figure Number of the assembly of interest. Turn to the page(s), locate the part on the exploded view, and find its Key Number. Refer to the Parts List on the page facing the exploded view and find the Key Number, Part Number and quantity required for your type of machine.

For screws, nuts, washers, retaining rings, pins, and spacers which are used in all models, Key Numbers that consist of one letter plus two digits are shown on the exploded diagrams. To identify these parts locate the Key Numbers in the "List of Standard Fasteners" and find the Part Number(s).

Note: While looking for a Part Number, pay particular attention to the voltage listed in the SERIAL NUMBER/REMARKS column to ensure that the Part Number selected is for your type of machine. Immediate shipping or action regarding the part depends on using its correct Part Number.

Parts List pages. The Parts List pages contain the following columns and information.

(1) Figure and Key Number column. The first column shows the Figure Number of the illustration corresponding to the Parts List, and the Key Number that identifies the part on the illustration.

(2) Part Number. The second column shows the Part Number for the part. This Number must be used when ordering replacement parts or assemblies described in the description column do not have a Part Number and are not stocked.

Note: The last three digits (suffix) of the Parts Number are called the Revision Number. The Revision Number is changed if the part is modified. Information regarding such changes will be provided by Service Information Bulletins. These Bulletins should be read carefully.

(3) Rank N. Parts marked "N" are service parts, but are not stock items. They are produced on a special-order basis.

(4) Quantity column. The quantity shown in this column is the number of parts used in the figure. However, the quantity listed for an assembly indicates the number of that assembly per machine.

The letters in this column indicate that the quantity of a part is not specified, allowing the use of the number of parts needed for assembly and that the quantity cannot be mentioned clearly.

(5) Description column. The Description column lists the description that should be used when ordering the part.

(6) Serial Number/Remarks. When there are differences in the specifications of power supply voltage, frequency, etc., the differences are described in words or indicated by one or two letters in front of the serial number.

(Example)
Serial number AB000001
└This is the descriptive indicator.

If a model modified and a part is no longer interchangeable, the serical number of copiers for which the part can be used is shown in this column. If there is no indication the party can be used with all models.

Connectors list. Part numbers of connectors used in copiers and designated as Service Parts are listed in numerical order by connector number.

For connectors of which the housing and contacts are a single unit, there are no part numbers for the contact.

Connectors that are mounted on PCBs are indicated as "PCB" in the connector column. The part numbers for these connectors should be looked for in the PCB parts list.

List of Standard Fasteners. This list incorporates screws, nuts, washers and shim washers, retaining rings, pins, and spacers that are used in all copiers (including optional equipment). These parts have different Key numbers from the usual Key numbers in each illustration. These parts are not listed in the part number list corresponding to the illustration.

The list of standard fasteners has different revision numbers from the Parts Catalog issued model by model. Parts that have been added to the present edition are indicated by a " * " to the left of the Key number.

COPYRIGHT©1996 CANON INC. CANON DR-3020 REV.0 MAR. 1996 PRINTED IN JAPAN (IMPRIME AU JAPON)

Numerical Index. There is a Numerical Index at the end of this catalog; it lists in numerical order every Part Number contained in the Parts Lists. The Numerical Index contains the following columns and information.

(1) Part Number. The first column shows the Part Number.

(2) Figure and Key Number column. The second column lists the Figure and Key Number for each occurrence of the part in the illustrations.

Part Numbers which are listed in the list of standard fasteners are not included.

A09

COPYRIGHT©1996 CANON INC. CANON DR-3020 REV.0 MAR. 1996 PRINTED IN JAPAN (IMPRIME AU JAPON)

UTLISATION DU CATALOGUE DES PIECÈS DÉTACHÉES

Schémas de localisation des ensembles. Ces schémas indiquent l'emplacement des principaux ensembles du copieur. La désignation correspondant à chaque ensemble est spécifiée dans un encadré. Le numéro de la figure repésentant la vue éclatée de l'ensemble est fourni sous l'encadré.

Recherche d'un numéro de référence. Consulter les schémas de localisation pour trouver le numéro de figure correspondant à l'ensemble concerné. Se reporter aux pages indiquées; identifier la pièce sur la vue eclatée, et voir le numéro de repère qui lui a été attribuée. Rechercher ce numéro de repère dans la première colonne des pages de listes de pièces situées juste après la vue éclatée. Une fois le numéro de repère trouvé, le tableau précise dans l'ordre, le numéro de référence, le nombre de pièces identiques, la désignation, la catégorie et, éventuellement, les numéros de série des machines équipées de cette pièce.

Pour ce qui concerne les vis, les écrous, les rondelles, les circlips, les goupilles et les cales d'épaisseur qui sont utilisés dans tous les modèles, les vues éclatées indiquent un numéro de repère constitué par une lettre suivie de deux chiffres. En présence d'un numéro de repère de ce type, se reporter à la liste des articles courants de vis-serie/boulonnerie ("List of Standard Fasteners") pour trouver les références de la pièce.

Remarque: Lors de la recherche d'un numéro de référence, bien vérifier que la tension d'alimentation indiquée dans la colonne numéros de série et remarques correspond au type de la machine à dépanner. Une expédition rapide, ou tout autre action relative à une pièce, ne peut être assurée que si l'on utilise le numéro de référence correct.

Pages de listes de pièces détachées. Dans ces pages, les informations suivantes sont fournies, sous forme de tableaux.

(1) Colonne numéros de figure et de repère. Dans cette première colonne, le premier chiffre correspond au numéro de figure de la vue éclatée, et le second au numéro de repère de la pièce sur cette vue.

(2) Colonne numéro de référence. Cette seconde colonne indique le numéro de référence de la pièce. Ce numéro doit être utilisé en particulier pour les commandes de pièces. La mention "NPN" dans cette colonne signifie que la pièce ou l'ensemble, dont la désignation est fournie sur la même ligne, n'a pas de numéro de référence et n'est pas conservée en stock.

(3) Colonne catégorie N. La mention "N" signifie que qu'il s'agit bien d'une pièce de maintenance, mais qu'elle n'est pas conservée en stock, et qu'elle doit faire l'objet d'une commande spéciale.

(4) Colonne quantité. Le chiffre indiqué dans cette colonne correspond au nombre de pièces identiques figurant sur la vue éclatée. Cependant, s'il s'agit d'un ensemble, le chiffre indique le nombre d'ensembles identiques utilisés dans la machine.

La présence de lettre dans cette colonne signifie que le nombre de pièces ne peut pas être précisé, car il dépend des besoins du montage.

(5) Colonne désignation. Cette colonne fournit la désignation qui doit être utilisée en particulier dans les commandes de pièces.

(6) Colonne numéros de série et remarques. Si une pièce ne peut être utilisée que sur une machine présentant une tension d'alimentation ou une fréquence bien particulière, ces précisions sont fournies en détail ou sous forme d'un code de deux lettres situé avant les numéros de série.

(Exemple)

Numéro de série AB000001
└Code indicateur de restriction d'emploi

Lorsqu'un modèle a été modifié, et qu'une pièce n'est plus entièrement interchangeable, cette même colonne indique les numéros de série des machines sur lesquelles la pièce désignée peut être utilisée. Si aucun numéro de série ne figure dans la colonne, la pièce peut être utilisée sur toutes les machines, indépendamment des modifications qu'elles ont pu subir.

Liste des connecteurs. Les numéros de référence des connecteurs utilisés dans le copieur et faisant partie des pièces de maintenance, sont énumérés dans l'ordre de leurs numéros sur les schémas électriques.

Pour ce qui concerne les connecteurs uniquement livrés avec les cosses incorporées au boîtier, il n'existe pas de numéros de référence pour les cosses.

Lorsque des connecteurs sont montés sur des cartes de circuit imprimé, on trouve la mention "PCB" dans la colonne connecteurs. Les numéros de référence de ces connecteurs doivent être recherchés dans la liste des cartes de circuit.

COPYRIGHT©1996 CANON INC. CANON DR-3020 REV.0 MAR. 1996 PRINTED IN JAPAN (IMPRIME AU JAPON)

Liste des articles courants de visserie/boulonnerie. La "List of Standard Fasteners" regroupe tous les numéros de repère correspondant aux vis, écrous, rondelles, circlips, goupilles et cales d'épaisseur utilisés dans tous les copieur et accessoires en option. Les numéros de repère de ces pièces se distinguent des autres du fait qu'ils sont constitués d'une lettre suivie de deux chiffres. Ces articles de visserie/boulonnerie ne sont pas repris dans les listes de pièces à la suite des vues éclatées.

La liste de ces articles présente des suffixe de révision différents de ceux mentionnés dans les catalogues de pièces détachées publiés pour chaque modèle. Les pièces rajoutées par rapport à l'édition précédente sont indiquées par un " * " à gauche du numéro de repère.

Index des numéros de référence. On trouve à la fin du catalogue des pièces détachées un index qui reprend dans l'ordre tous les numéros de référence mentionnés dans les listes de pièce. L'index des numéros de référence comporte deux colonnes.

(1) Colonne numéro de référence. Le numéro de référence est inscrit dans cette première colonne.

(2) Colonne numéros de figure et de repère. Cette seconde colonne indique le numéro de la figure et le numéro de repère correspondant à chacune des vues éclatées sur lesquelles la pièce est représentée.

Les numéros de référence des articles courants de visserie/boulonnerie ne figurent pas dans cet index.

COPYRIGHT©1996 CANON INC. CANON DR-3020 REV.0 MAR. 1996 PRINTED IN JAPAN (IMPRIME AU JAPON)

COMO UTILIZAR LAS LISTAS DE PIEZAS

Diagramas de las Unidades. Estos diagramas, muestran la ubicación de las principales unidades de la copiadora. Sus nombres aparecen identificados en cuadros rectangulates. Debajo de cada cuadro, se encuentra el número de la figura ilustrando una vista desarrollada de la unidad.

Cómo encontrar un Número de Pieza. Refiérase a los Diagramas de Ubicación de las Unidades, y encuentre el número de la figura de la unidad que le interesa. Vaya a la página(s) indicada(s), ubique a la pieza en la vista desarrollada y halle su Número Clave. Refiérase a la Lista de Piezas en la página adyacente a la vista y busque el Número Clave, el número de la pieza y la cantidad requerida para su tipo de maquina.

Para los tornillos, tuercas, arandelas, aros retenedores, clavijas y espaciadores que se usan en todos los modelos, aparecen los números clave (que constan de una letra más dos dígitos) ilustrados en los diagramas desarrollados. Para identificar estas piezas, ubique los Números Clave en la "Lista de Sujetadores Estándar", y luego encuentre los números de la(s) pieza(s).

Nota: Al buscar un Número de Pieza, ponga especial atención al voltaje que aparece listado en la columna de NUMERO DE SERIE/OBSERVACIONES, para asegurarse que el Número de Pieza seleccionado es para su tipo de máquina. El embarque inmediato, así como cualquier medida sobre el repuesto, depende del correcto uso que se haga del Número de la Pieza.

Páginas de la Lista de Piezas. Las páginas de la Lista de Piezas, contienen las siguientes columnas e informaciones.

(1) Columna de Figura y del Número de Clave. En la primera columna, se muestra el número de la figura de la ilustración correspondiente a la Lista de Piezas, así como el Número Clave que identifica a la pieza sobre la ilustración.

(2) Número de Pieza. La segunda columna, expone el Número de Pieza para el repuesto. Este es el número que debe usar al ordenar sus piezas de repuesto. Las letras NPN en esta columna, indican que las piezas o unidades descritas en la columna de descripciones no tienen un Número de Pieza, y por lo tanto, no están almacenadas en la bodega.

Nota: Los tres últimos dígitos (sufijo) del Número de Pieza, se denomina el Número de Revisión. El Número de Revisión, se cambia al modificarse la pieza. La información relacionada con tales cambios se notificará por medio de los Boletines de las Informaciones de Servicio. Estos boletines, deben leerse cuidadosamente.

(3) Tipo N. Las piezas marcadas "N", son piezas de repuesto, pero no son ítemes de existencia en las bodegas. Estas se producen en base a ordenes especiales.

(4) Columna de Cantidades. La cantidad expuesta en esta columna correspondiente a la cantidad de piezas usadas en la figura. No obstante, la cantidad listada para una unidad indica la cantidad de ésa unidad por máquina.

En esta columna, las letras indican que la cantidad de una pieza específica no está especificada, permitiendo el uso de la cantidad de piezas necesarias para ensamblar y que la cantidad no se puede mencionar claramente.

(5) Columna de Descripción. La Columna de Descripción, lista la descripción que debe utilizarse al ordenarse la pieza.

(6) Número de Serie/Observaciones. Cuando hay diferencias en las especificaciones sobre el voltaje de suministro, la frecuencia, etc., la diferencia se describe en palabras o se indica por una o dos letras enfrente del número de serie.

(Por ejemplo)

Número de Serie AB000001
└Este es el indicador descriptivo.

Si ya un modelo modificado y una pieza no son intercambiables, el número de serie de las copiadoras en las que se puede usar la pieza se ilustra en esta columna. Si no hay indicación alguna, la pieza se puede usar con todos los modelos.

Lista de Conectores. Los números de repuesto de los conectores usados en las copiadoras y que se han designado como Repuestos de Servicio, aparecen listados en orden numérico por el número del conector.

Para los conectores cuyos alojamientos y contactos son una sola unidad, no hay número de pieza para el contacto.

Los conectores que están montados en los Circuitos Impresos "PCB's", se indican como "PCB" en la columna del conector. Los números de pieza para estos conectores deben buscarse en la lista de piezas de los PCB.

Lista de los Sujetadores Estándar. Esta lista, incorpora los tornillos, tuercas, arandelas y las arandelas sepa-

COPYRIGHT©1996 CANON INC. CANON DR-3020 REV.0 MAR. 1996 PRINTED IN JAPAN (IMPRIME AU JAPON)

radoras, aros retenedores, do los equipos opcionales). Estas piezas tienen diferentes números Clave á aquellos números clave que aparecen en cada ilustración. Estas piezas no están listadas en la Lista de Número de Piezas correspondientes a la ilustración.

La lista de sujetadores estándar, tiene diferentes números de revisión a aquellos que aparecen en el Catálogo de Partes que se emite modelo por modelo. Las piezas que se han agregado a la presente edición están señaladas por un asterisco " * " del lado izquierdo del número clave.

Indice Numérico. Al final de este Catálogo, hay un Indice Numérico: tiene ubicado por orden numérico cada Número de Pieza contenido en la Lista de Repuestos. El Indice Numérico, contiene las siguientes columnas e informaciones.

(1) Número de Pieza. La primera columna indica el Número del Repuesto.

(2) Columna de la Figura y Número Clave. La segunda columna lista la figura y el número clave para cada incidencia de la pieza en las ilustraciones.

No se incluyen los números de las piezas que están listadas en la lista de los sujetadores estándar.

A13

COPYRIGHT©1996 CANON INC. CANON DR-3020 REV.0 MAR. 1996 PRINTED IN JAPAN (IMPRIME AU JAPON)

GEBRAUCH DER TEILELISTE

Schaubilder der Einbauorte. Die Einbauorte der Hauptbaugruppen des Kopiergerätes werden hier in Schaubildern gezeigt. Die Bezeichnungen der Baugruppen befinden sich in rechteckigen Kästchen. Darunter steht die Abbildungsnummer, unter welcher eine Explosionsdarstellung der betreffenden Baugruppe im Katalog gezeigt wird.

Auffinden der Teilenummer. Zunächst sucht man - bei den "Schaubildern der Einbauorte" - die Abbildungsnummer. Dann schlägt man die der Abbildungsnummer entsprechende Seite des Kataloges auf und sucht die Schlüsselnummer des gewünschten Teiles in der Explosionsdarstellung. Anhand der Schlüsselnummer des gewünschten Teiles in der Explosionsdarstellung. Anhand der Schlüsselnummer läßt sich nun die Teilenummer und die Anzahl der Teile entsprechend des Gerätetypes ermitteln.

Die Schlüsselnummer von Schrauben, Muttern, Unterlegscheiben, Sprengringen und Stiften, die bei allen Modellen verwendet werden, besteht aus einem Buchstaben mit zwei folgenden Zahlen. Die Teilenummer ist unter der entsprechenden Schlüsselnummer in der Liste "Standard-Befestigungselemente" zu finden.

Hinweis: Auf der Suche nach einer Teilenummer besonders auf die Spalte achten, in der die Seriennummer des Kopiergerätes aufgeführt ist, um sicherzustellen, daß die gewählte Teilenummer zur Betriebsspannung des Gerätetyps paßt.

Seiten der Teileliste. Die Seiten der Teileliste sind folgendermaßen gegliedert:

(1) Abbildungs- und Schlüsselnummer. In der ersten Spalte einer Seite steht die Abbildungsnummer der Darstellung sowie die Schlüsselnummer, mit der das Teil in der Explosionsdarstellung gekennzeichnet ist.

(2) Teilenummer. In der zweiten Spalte steht die Teilenummer des entsprechenden Teils. Diese Nummer muß bei der Bestellung von Ersatzteilen verwendet werden. Die Buchstaben NPN in dieser Spalte weisen darauf hin, daß das Teil bzw. die Baugruppe keine Teilenummer hat und nicht lieferbar ist.

Hinweis: Die letzten drei Stellen einer Teilenummer geben die Revisionsnummer an. Die Revisionsnummer wird im allgemeinen bei der Modifizierung eines Teils geändert. Kenntnis darüber erhalten Sie in Form einer "Technischen Information". Diese Informationen sollten sorgfältig gelesen werden.

(3) Rang N. Teile mit der Kennzeichnung N sind Serviceteile, jedoch keine Lagerartikel. Sie werden im Falle einer Bestellung eigens hergestellt.

(4) Teilemenge. In dieser Spalte ist die Anzahl der in der dargestellten Baugruppe verwendeten Teile angegeben. Die für Baugruppen angegebene Anzahl bezieht sich auf die Anzahl von Baugruppen pro Gerät.

Buchstaben in der Spalte weisen darauf hin, daß das Teil kein eigenständiges Teil der Baugruppe ist und nur zur Bezugnahme aufgeführt ist.

(5) Teilebezeichnung. Hier wird die Bezeichnung des Teils angegeben, die bei der Bestellung verwendet werden sollte.

(6) Seriennummer/Bemerkungen. Unterschiedliche Gerätespezifikationen (Netzspannung, Netzfrequenz usw.) sind anhand der Buchstaben der Seriennummer zu erkennen, oder werden in Textform beschrieben.

Beispiel: Seriennummer ——→ AB 000 001
↑
Kennzeichnung der Gerätespezifikation

Wird ein Gerät geändert und ein Teil ist nicht mehr austauschbar, werden die Seriennummern der Geräte, für welches das jeweilige Teil verwendet werden kann, ebenfalls in dieser Spalte aufgeführt.

Ein Teil ist in allen Geräten eines Modells verwendbar, wenn keine Eintragung in dieser Spalte vorhanden ist.

Liste der Steckverbindungen. Die Teilenummern der Steckverbindungen sind in dieser Liste in numerischer Reihenfolge aufgeführt.

Bei Steckern, die aus getrennten Steckergehäusen und Steckerkontakten bestehen, wird keine Teilenummer für die Steckerkontakte angegeben. Steckverbindungen, die sich auf Printplatten befinden, sind durch die Buchstaben "PCB" gekennzeichnet. Die Teilenummer dieser Steckverbindungen ist bei den entsprechenden Printplatten zu finden.

Liste der Standard-Befestigungselemente. In dieser Liste sind Schrauben, Muttern, Unterlegscheiben, Sprengringe, Stifte usw., die bei allen Geräten (incl. Sonderzubehör) zur Anwendung kommen, aufgeführt.

Numerischer Index. Im Anhang dieses Katalogs sind in numerischer Reihenfolge alle in den Teilelisten enthaltenen Teilenummern aufgeführt. Der numerische

A14

COPYRIGHT©1996 CANON INC. CANON DR-3020 REV.0 MAR. 1996 PRINTED IN JAPAN (IMPRIME AU JAPON)

Index ist folgendermaßen aufgebaut:

(1) Teilenummer. In der ersten Spalte des Index stehen die Teilenummern.

(2) Abbildungs- und Schlüsselnummer. In der zweiten Spalte des Index sind die Abbildungs- und Schlüsselnummern für alle in den Darstellungen erscheinenden Teile aufgelistet.

B01

COPYRIGHT©1996 CANON INC. CANON DR-3020 REV.0 MAR. 1996 PRINTED IN JAPAN (IMPRIME AU JAPON)

ПОРЯДОК ПОЛЬЗОВАНИЯ СПИСКАМИ ДЕТАЛЕЙ

Схемы расположения узлов (Assembly Location Diagrams) На этих схемах показано расположение основных узлов копировального аппарата. Их наименования приведены в прямоугольных рамках. Ниже каждой прямоугольной рамки приведен номер рисунка, на котором показано изображение соответствующего узла в разобранном виде.

Нахождение номера детали (Part Number) Ссылаясь на схемы расположения узлов, отыскать номер рисунка требуемого узла. Перевернуть страницу(ы), найти требуемую деталь на изображении узла в разобранном виде и найти ключевой номер детали. Ссылаясь на список деталей, приведенный на странице, на которой имеется изображение узла в разобранном виде, найти ключевой номер, номер детали и количество деталей, требуемых для машины Вашей модели.
Что касается винтов, гаек, стопорных колец, пальцев и распорных втулок, которые используются на всех моделях, то их ключевые номера, состоящие из одной буквы и двух цифр, приведены на изображении узла в разобранном виде.
Для индефикации таких деталей следует найти соответствующие ключевые номера в „Списке стандартных крепежных деталей" и отыскать номер(а) детали(ей).

Примечание: Во время поиска требуемого номера детали следует уделять особое внимание напряжению, указанному в колонке СЕРИЙНЫЙ НОМЕР/ЗАМЕЧАНИЯ (SERIAL NUMBER/REMARKS), чтобы убедиться в том, что выбранный номер детали подходит для машины Вашей модели. Скорость поиска и отгрузки детали в значительной степени зависит от указания правильного номера детали.

Страницы списка деталей (Parts List pages) Страницы списка деталей содержат следующие колонки и информацию:

(1) Колонка номеров рисунка и ключевых номеров (Figure and Key Number column) В первой колонке приведен номер рисунка на иллюстрации, соответствующей данному списку деталей, и ключевой номер, который позволяет идентифицировать требуемую деталь на этой иллюстрации.

(2) Номер детали (Part Number) Во второй колонке приведены номера деталей. Этот номер следует указывать при заказе заменяемой детали.
Буквы NPN в этой колонке указывают на то, что детали или узлы, описанные в колонке описания, не имеют номер детали и не хранятся на складе.

Примечание: Последние три цифры (суффикс) номера детали называются ревизионным номером. Ревизионный номер изменяется в случае модефицирования детали. Информация о таких изменениях содержится в наших „Бюллетенях технического обслуживания". Поэтому следует внимательно читать эти бюллетени.

(3) Ранк N (Rank N) Части со знаком „N" – сервисные и не находятся в хранении. Они изготавливаются по специальным заказам.

(4) Колонка количества (Quantity column) Количество, указанное в этой колонке, является числом деталей, используемых на данном рисунке. Однако, количество, указанное для случая узла, означает число таких узлов в одном аппарате.
Буквы в этой колонке означают, что количество таких деталей не специфицируется, что позволяет использовать номер деталей, требуемых для сборки, в то врмя как количество невозможно точно указать.

(5) Колонка описания (Description column) В этой колонке приведено описание детали, которое следует указывать при заказе детали.

(6) Серийный номер/замечания (Serial Number/Remarks) Когда имеется отличие в таких технических характеристиках, как напряжение, частота и т.д. источника питания, эти отличия описываются или обозначаются одной или двумя буквами, стоящими перед серийным номером.

Пример: Серийный номер AB000001
↑
Это указатель описания
Если модель модифицирована и деталь больше не подлежит замене, то соответствующий серийный

COPYRIGHT©1996 CANON INC. CANON DR-3020 REV.0 MAR. 1996 PRINTED IN JAPAN (IMPRIME AU JAPON)

номер копировальных аппаратов, для которых может использоваться деталь, указывается в этой колонке. Если нет такого указания, то данная деталь может использоваться для всех моделей.

Список разъемов (Connectors List) Номера деталей для разъемов, используемых в копировальных аппаратах, обозначаются как сервисные номера и перечисляются в числовом порядке по номерам разъемов.
Для разъемов, для которых корпус и контакты составляют одно целое, номера деталей для контактов не указываются.
Разъемы смонтированы на печатных платах и обозначаются как „PCB" в колонке разъемов. Номер детали для таких разъемов следует искать в списке деталей для печатных плат (PCB).

Список стандартных крепежных деталей (List of Standard Fasteners) В этом списке содержатся винты, гайки, шайбы и прокладочные (регулировочные) шайбы, стопорные кольца, пальцы и распорные втулки, которые используются во всех копировальных аппаратах (включая и оборудование, поставляемое по специальному заказу). Эти детали имеют ключевые номера, отличные от ключевых номеров, приведенных на каждой иллюстрации. Эти детали не указаны в списке номеров деталей, соответствующем данной иллюстрации.
Список стандартных крепежных деталей имеет ревизионные номера, отличные от таковых в каталоге деталей, издаваемом для каждой отдельной модели.
Детали, которые добавляются в данном издании, обозначаются звездочкой „*" слева от ключевого номера.

Числовой индекс (Numerical Index) Это числовой индекс, который стоит в конце данного каталога; индексы перечислены в числовом порядке для каждого номера детали, содержащегося в списке деталей.
Числовые индексы содержат следующие колонки и информацию:

(1) Номер детали (Part Number) В первой колонке приведен номер детали.

(2) Колонка номеров рисунка и ключевых номеров (Figure and Key Number column) Во второй колонке приведены номера рисунков и ключевые номера для каждой детали, приведенной на иллюстрациях.
Номера деталей, которые перечислены в списке стандартных крепежных деталей, сюда не включены.

B03

COPYRIGHT©1996 CANON INC. CANON DR-3020 REV.0 MAR. 1996 PRINTED IN JAPAN (IMPRIME AU JAPON)

零件目录的使用方法

1. 主要零件布置图

从主要零件布置图中，可以查找零件图编号及各个组件的位置。

图中 □ 内标以零件图名称，◯ 内标以零件图编号。

2. 零件编号的查找方法

各个组件使用的零件，可以主要零件布置图中查找，掀到零件图编号页。

从零件图中查找零件，只要先从零件编号表中找到基本编号后，则零件编号及零件名称即可得出。另外，在整个产品所共同使用的螺钉、螺母、衬垫、挡圈、销及调整垫等，在零件图上用1个拉丁字母及两位数字，计3位基本编号表示，故请在C.机械标准零件一览表中查找零件的编号。

注：电源电压、频率等规格不同时，则在同一基本编号处，记有多种零件编号，故请注意序列号及备注栏。

3. 零件编号表

零件编号表的内容项目如下：

(1) 零件图编号及基本编号

在各种零件编号表栏的左上方，标明零件图编号，与各个零件图相对应。

另外，基本编号与零件图中的各个零件是互相对应的。

(2) 零件编号

表中第2栏，为零件编号。

订购零件时，务请注明零件编号。

标有NPN的零件及组件，没有零件编号，也没有库存，即不能供应的零件。

注：零件编号的3位尾号，称为订正号，为了改进零件进行部分变更时，则变更此尾号。变更情况，于技术情报上随时报导，因此请随时留意阅读该情报。

(3) 类 别

标有N的零件为修理用零件，没有库存，接受订货后，可进行定作。

(4) 使用个数

第4栏（即使用使用个数栏）中的数字，为各零件图中该零件的使用数量。组件的使用个数，为每部机械的使用数量。

使用个数栏，除数字外，还标以下列的有关字母。

RF……为参考数量

AR……表示不限定数量，安装时根据需要，确定使用数量；或者不易确定的个数。

(5) 零件名称

每种零件的名称均分别以英文与日文表示订购零件时，务请注明具体名称。电气零件等的主要规格、型号，均于英文的末尾标明。

(6) 机械整体的编号／备考

电源的电压与频率等，规格如果不同时，以文字加以说明，或以机械本身编号最前面的字母（1个字母或2个字母）的略号表示。

COPYRIGHT©1996 CANON INC. CANON DR-3020 REV.0 MAR. 1996 PRINTED IN JAPAN (IMPRIME AU JAPON)

略号的表示示例：

机械整体编号　AB000001

↑

└——只以A表示

另外，由于产品变更，零件不能互换时，则将表示该零件能够适用的机体编号。

如果没有任何表示时，则将适用于所有机型。

4. 连接器一览表

产品使用的连接器上的零件之编号，按照连接器编号顺序表示。

连接器罩与接头为一整体结构时，则接头栏内不再注明零件编号。

另外，印刷电路板上的连接器，标以ＰＣＢ符号，请在印刷电路板的零件表上查找零件编号。

5. 机械的标准零件一览表

整个复印机全部产品（包括选购件）所共同使用的螺钉、螺母、衬垫、挡圈、销及调整垫等，均汇总于标准零件一览表内。这类零件与各零件图中一般的基本编号不同，编号前面附３个字母。与零件图对应的零件编号表中未列这类零件。

机械的标准零件一览表与各项产品的零件目录不同，附有修正编号。较上一版追加的零件，则在基本编号的左方附一“＊”符号表示。

6. 零件索引

卷末附有按零件的编号顺序的索引。

了解零件编号后，查找使用位置时，极为方便。

索引表中的左档为零件编号，右档为零件图编号与基本编号。

另外，本表中未列出机械标准零件一览表中记载的零件编号。

COPYRIGHT©1996 CANON INC. CANON DR-3020 REV.0 MAR. 1996 PRINTED IN JAPAN (IMPRIME AU JAPON)

كيف تستخدم قائمة قطع الغيار

الرسومات التوضيحية لاماكن المجموعات

توضح هذه الرسومات اماكن كافة مجموعات الآلة وقد كتب اسم كل مجموعة داخل مستطيل وكتب اسفل كل مستطيل رقم الصفحة التى تحتوى على الرسم التفصيلى الذى يوضح جميع اجزاء المجموعة.

ايجاد رقم جزء ما

ارجع الى الرسومات التوضيحية لاماكن المجموعات وابحث عن رقم الصفحة الخاص بالمجموعة التى تحتوى على الجزء المطلوب. انتقل الى تلك الصفحة، حدد الجزء على الرسم التفصيلى وتبين الرقم الذى يمثل هذا الجزء. وابحث فى قائمة الاجزاء الواقعة فى الصفحة المقابلة للرسم التفصيلى ــ عن الرقم الذى يمثل الجزء المطلوب وتبين رقم الجزء والكمية المستخدمة منه فى طراز آلتك.

بالنسبة للمسامير القلاووظ (البراغى)، الصواميل، الورد، الحلقات الحاجزة، البنوز والقطع الفاصلة وهى قطع مستخدمة فى جميع الآلات فان الرقم الذى يمثل هذه الاجزاء والمكون من حرف ورقمين موضح فقط على الرسومات التفصيلية وللحصول على رقم الجزء ابحث فى قوائم "القطع القياسية للاحكام والربط" عن الرقم الذى يمثل هذا الجزء.

ملحوظة: عند البحث عن رقم جزء ما، انتبه الى الجهد الكهربى الذى يناسبه والموضح في عمود "الرقم المسلسل للآلة/الملاحظات" للتأكد ان الرقم الذى حصلت عليه هو المناسب لطراز آلتك ــ لأن الرقم الصحيح للجزء يساعد على حصولك عليه بأقصى سرعة.

الصفحات الخاصة بقوائم الاجزاء

وهى تتكون من الاعمدة والمعلومات الآتية:

(١) **عمود رقم الصفحة والرقم الذى يمثل الجزء**

يوضح العمود الاول رقم الصفحة الخاصة بالرسم التفصيلى المرفق بقائمة الاجزاء كما انه يوضح الرقم الذى يمثل الجزء على الرسم.

(٢) **عمود رقم الجزء**

يبين العمود الثانى رقم الجزء وهو الذى يستخدم عند طلب قطع الغيار. الرمز " NPN " يبين ان هذا الجزء (او المجموعة) بدون رقم وهو غير مخزون.

ملحوظة: الارقام الثلاثة الاخيرة من رقم الجزء تسمى ارقام المراجعة وهى تتغير اذا حدث تعديل للجزء. وترد المعلومات والتفاصيل الخاصة بهذا التعديل فى "نشرة تعليمات الصيانة" والتى يرجى ان تقرأ بعناية.

(٣) **عمود الرتبه " N "**

الاجزاء المشار اليها بحرف " N " هى اجزاء مستخدمة ولكنها ليست مخزونة وتنتج هذه الاجزاء بناء على طلب خاص.

(٤) **عمود الكمّية**

يشير العدد المدون فى هذا العمود الى الكمّية من نفس الجزء المستخدمة فى الرسم. بينما الكمّية المدونة لمجموعة ما تبين عدد مرات استخدام المجموعة فى الآلة.

عند وجود احرف فى هذا العمود فهذا يعنى ان عدد مرات استخدام هذا الجزء غير محدد وانه يسمح باستخدام العدد المطلوب للتجميع.

(٥) **عمود وصف الجزء**

يوضح هذا العمود الوصف الذى يجب استخدامه عند طلب الجزء.

(٦) **عمود الرقم المسلسل للآلة/الملاحظات**

عند وجود اختلافات فى مواصفات جزء معين نتيجة لاختلاف الجهد الكهربى المستخدم او التردد ... الخ، فان هذه الاختلافات توصف اما بالكلمات واما بالحرف الاول او الحرفين الاولين من الرقم المسلسل للآلة.

(مثال):

الرقم المسلسل AB000001

هذا حرف يشير الى اختلاف المواصفات

اذا حدث تعديل بالآلة واصبح جزء ما غير مناسب للآلات المعدلة فانه يكتب فى هذا العمود الرقم المسلسل للآلات حيث يمكن استخدام الجزء، واذا لم ترد تعليمات بذلك فانه يمكن استخدام هذا الجزء فى جميع الآلات.

قائمة الوصلات

ارقام الوصلات المستخدمة فى آلات النسخ والتى تعتبر قطع تبديل دوّنت فى هذه القائمة بترتيب رقمي.

بالنسبه للوصلات التى تشمل نقط التوصيل فلم تعطى رقم قطعه.

اما بالنسبه للوصلات المركبة على اللوحات الكهربائية، فقد كتب فى عمود نوع الوصلة " PCB " ويمكن الحصول على رقم الوصلة بالرجوع الى قائمة اللوحات الكهربائية.

قائمة القطع القياسية للاحكام والربط

تشمل هذه القائمة المسامير القلاووظ، الصواميل، الورد، الحلقات الحاجزة، البنور والقطع الفاصلة التى تستخدم فى كافة آلات النسخ (بما فى ذلك الاجزاء الاختيارية). ولهذه القطع ارقام تمثلها على الرسومات التفصيلية تختلف عن الارقام التى تمثل الاجزاء الاخرى. وهذه الاجزاء غير مدونة فى قائمة ارقام الاجزاء الماثلة للرسم التفصيلى. ولهذه القائمة ارقام مراجعة تختلف عن ارقام مراجعة الكتالوج الصادر لكل طراز. الاجزاء التى اضيفت الى الطبعة الحالية للكتالوج موضحة بالعلامه * على يسار الرقم الذى يمثل الجزء.

فهرس ارقام الاجزاء

هناك فهرس لأرقام الاجزاء فى نهاية الكتالوج مدون بالترتيب التصاعدى لكل جزء مذكور فى قوائم الاجزاء ويتضمّن الاعمدة والمعلومات الآتية:

(١) **رقم الجزء**

موضح فى العمود الاول.

(٢) **الصفحة والرقم الذى يمثل الجزء على الرسم**

يشمل العمود الثانى رقم الصفحة والرقم الذى يمثل الجزء اينما ظهر فى الرسومات التفصيلية.

ارقام الاجزاء المدونة فى قائمة القطع القياسية للاحكام والربط غير مذكورة فى هذا الفهرس.

B06

COPYRIGHT©1996 CANON INC. CANON DR-3020 REV.0 MAR. 1996 PRINTED IN JAPAN (IMPRIME AU JAPON)

FIGURE A ASSEMBLY LOCATION DIAGRAM
主要部品配置図

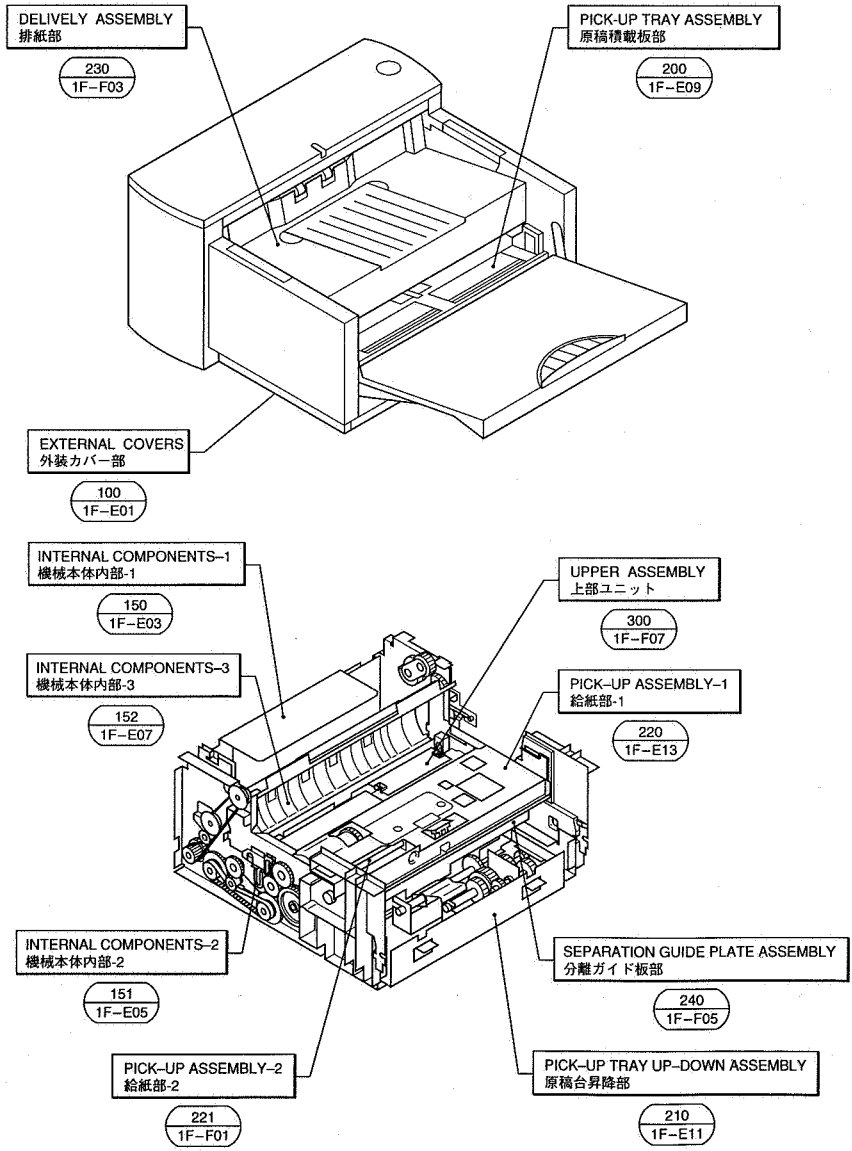

C01

COPYRIGHT©1996 CANON INC. CANON DR-3020 REV.0 MAR. 1996 PRINTED IN JAPAN (IMPRIME AU JAPON)

FIGURE B INDEX OF FIGURES
イラスト索引

FIGURE 100 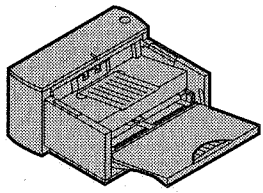 1F-E01	FIGURE 150 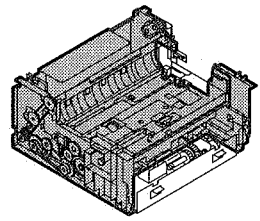 1F-E03	FIGURE 151 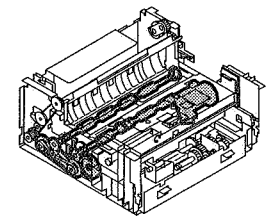 1F-E05
FIGURE 152 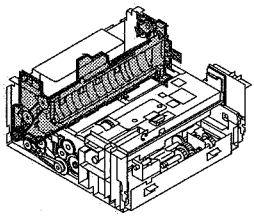 1F-E07	FIGURE 200 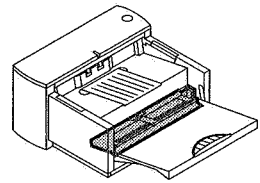 1F-E09	FIGURE 210 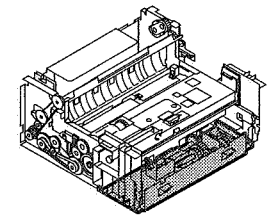 1F-E11
FIGURE 220 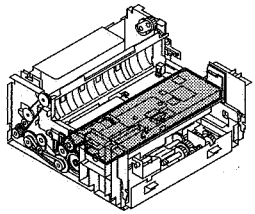 1F-E13	FIGURE 221 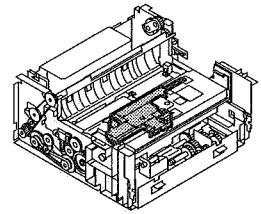 1F-F01	FIGURE 230 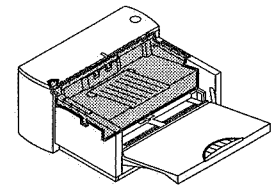 1F-F03
FIGURE 240 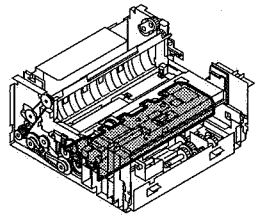 1F-F05	FIGURE 300 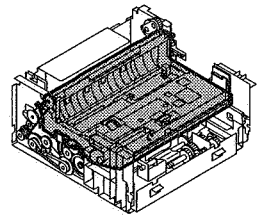 1F-F07	

D01

COPYRIGHT©1996 CANON INC. CANON DR-3020 REV.0 MAR. 1996 PRINTED IN JAPAN (IMPRIME AU JAPON)

FIGURE 100 EXTERNAL COVERS
外装カバー部

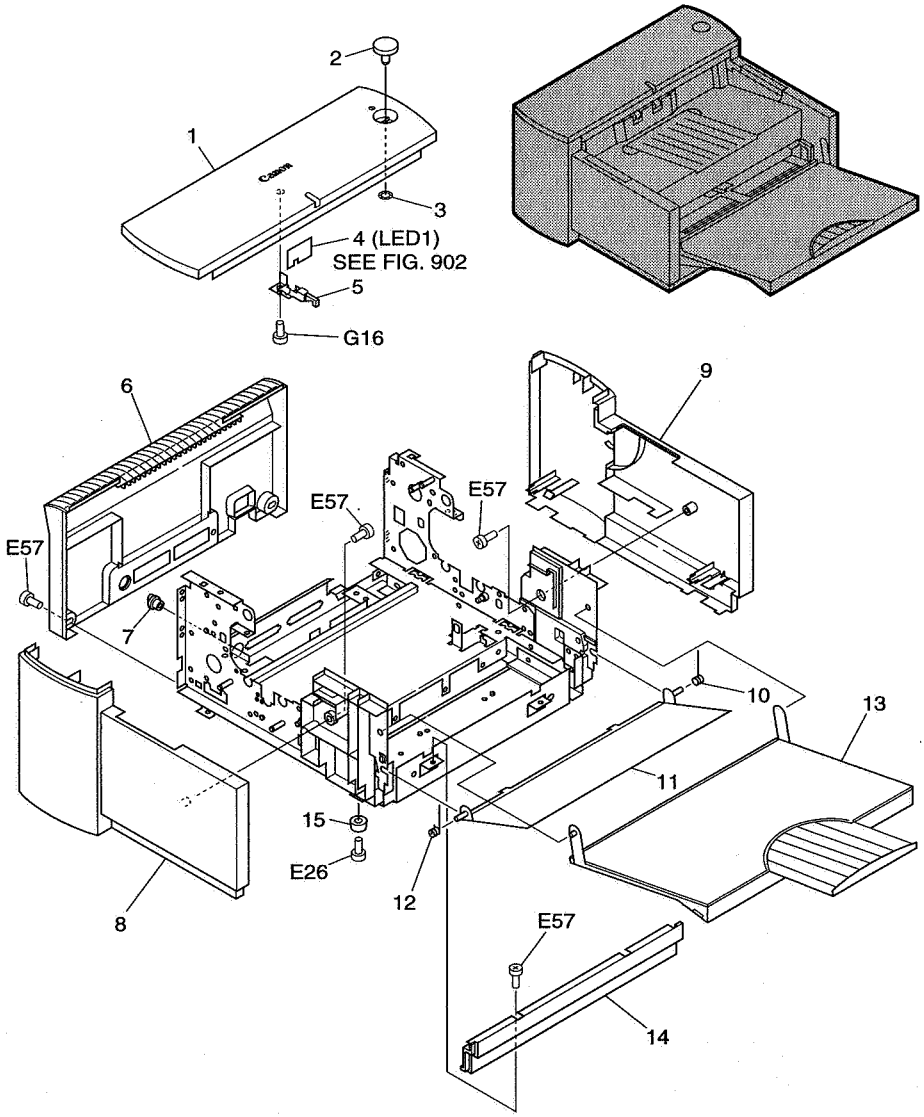

E01

COPYRIGHT©1996 CANON INC. CANON DR-3020 REV.0 MAR. 1996 PRINTED IN JAPAN (IMPRIME AU JAPON)

FIGURE & KEY NO.	PARTS NUMBER	RANK	Q'TY	DESCRIPTION	REMARKS
100 - 1	MA2-4415-000		1	PANEL, UPPER テンジョウ カバー	
2	MA2-4417-000	N	1	BUTTON, SWITCH スイッチ カバー	
3	XD2-2300-502		1	SE RING SE リング	
4	MG1-2487-000		1	LED PCB ASSEMBLY LED カイロキバン	
5	MA2-4416-000	N	1	WINDOW ヒョウジ マド	
6	MA2-4447-000		1	PANEL, REAR ウシロ カバー	
7	MA2-4429-000	N	1	KNOB ツマミ	
8	MF1-3559-000		1	PANEL, SIDE, LEFT ヒダリ ソクメン カバー	
9	MF1-3560-000		1	PANEL, SIDE, RIGHT ミギ ソクメン カバー	
10	MA2-4434-000		1	SPRING, TORSION マエカバー カイテン バネ (ミギ)	
11	MA2-4450-000		1	PANEL, UPPER, FRONT マエ カバー ウエ	
12	MA2-4435-000		1	SPRING, TORSION マエカバー カイテン バネ (ヒダリ)	
13	MF1-3550-000		1	TRAY, PICK-UP キュウシ トレイ	
14	MA2-4451-000		1	PANEL, LOWER, FRONT マエ カバー シタ	
15	XH9-0100-000		4	FOOT, RUBBER ゴム アシ	

COPYRIGHT©1996 CANON INC. CANON DR-3020 REV.0 MAR. 1996 PRINTED IN JAPAN (IMPRIME AU JAPON)

FIGURE 150 INTERNAL COMPONENTS-1
本体機械内部－1

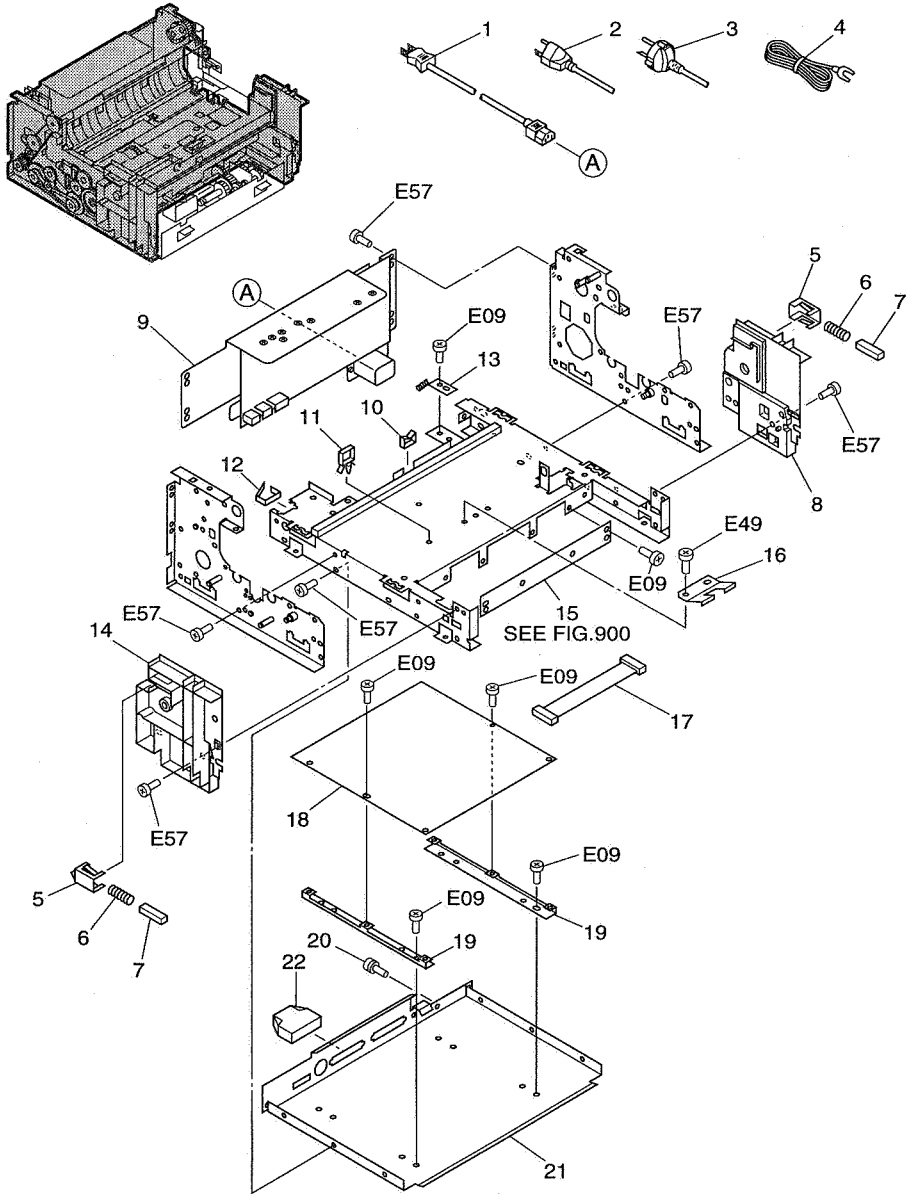

E03

COPYRIGHT©1996 CANON INC. CANON DR-3020 REV.0 MAR. 1996 PRINTED IN JAPAN (IMPRIME AU JAPON)

FIGURE & KEY NO.	PARTS NUMBER	RANK	Q'TY	DESCRIPTION	REMARKS
150 – 1	RH2–5114–000		1	CABLE, POWER SUPPLY デンゲン ケーブル	100V
2	RH2–5115–000		1	CABLE, POWER SUPPLY デンゲン ケーブル	120V
3	RH2–5116–000		1	CABLE, POWER SUPPLY デンゲン ケーブル	220, 240V
4	FH2–5006–000		1	CORD, GROUNDING アース コード	100V
5	MA2–4455–000	N	2	SLIDER, LOCK ロック スライダ	
6	MS1–2358–000		2	SPRING, COMPRESSION ロック バネ	
7	MA2–4419–000	N	2	CUSHION, P.URETHANE ロック カンショウザイ	
8	MA2–4448–000	N	1	COVER, INNER, RIGHT ミギ ウチ カバー	
9	MH3–2032–000		1	DC POWER SUPPLY PCB ASSEMBLY スイッチング デンゲン	100, 120V
	MH3–2033–000		1	DC POWER SUPPLY PCB ASSEMBLY スイッチング デンゲン	200, 240V
10	WT2–0204–000		3	CLAMP, CABLE エッジ サドル	
11	WT2–0317–000		1	CLAMP, CABLE ワイヤ サドル	
12	WT2–5031–000		1	CLAMP, CABLE エッジ サドル	
13	MA2–3497–000		1	SPRING, GROUNDING アース バネ	
14	MA2–4449–000	N	1	COVER, INNER, LEFT ヒダリ ウチ カバー	
15	MG1–2484–000		1	CONNECTOR PCB ASSEMBLY チュウケイ カイロキバン	
16	MA2–4431–000	N	1	PLATE, SPRING, RESIST PRESS レジスト オシアツ バネ	
17	MH2–5256–000		1	CABLE, FLAT, BASIS BASIS フラット ケーブル	
18	MG1–2483–000		1	CPU PCB ASSEMBLY CPU カイロキバン	
19	MA2–4433–000	N	2	PLATE, REINFORCEMENT PCB ボード ホキョウ トリツケイタ	
20	FA9–2113–000		1	SCREW, W/TOOTH WASHER M4x8 キクザッキ ネジ	
21	MA2–4432–000	N	1	PLATE, PCB ボード トリツケイタ	
22	WK8–5052–000		1	TERMINATOR ターミネータ	

E04

COPYRIGHT©1996 CANON INC. CANON DR-3020 REV.0 MAR. 1996 PRINTED IN JAPAN (IMPRIME AU JAPON)

FIGURE 151 INTERNAL COMPONENTS-2
本体機械内部－2

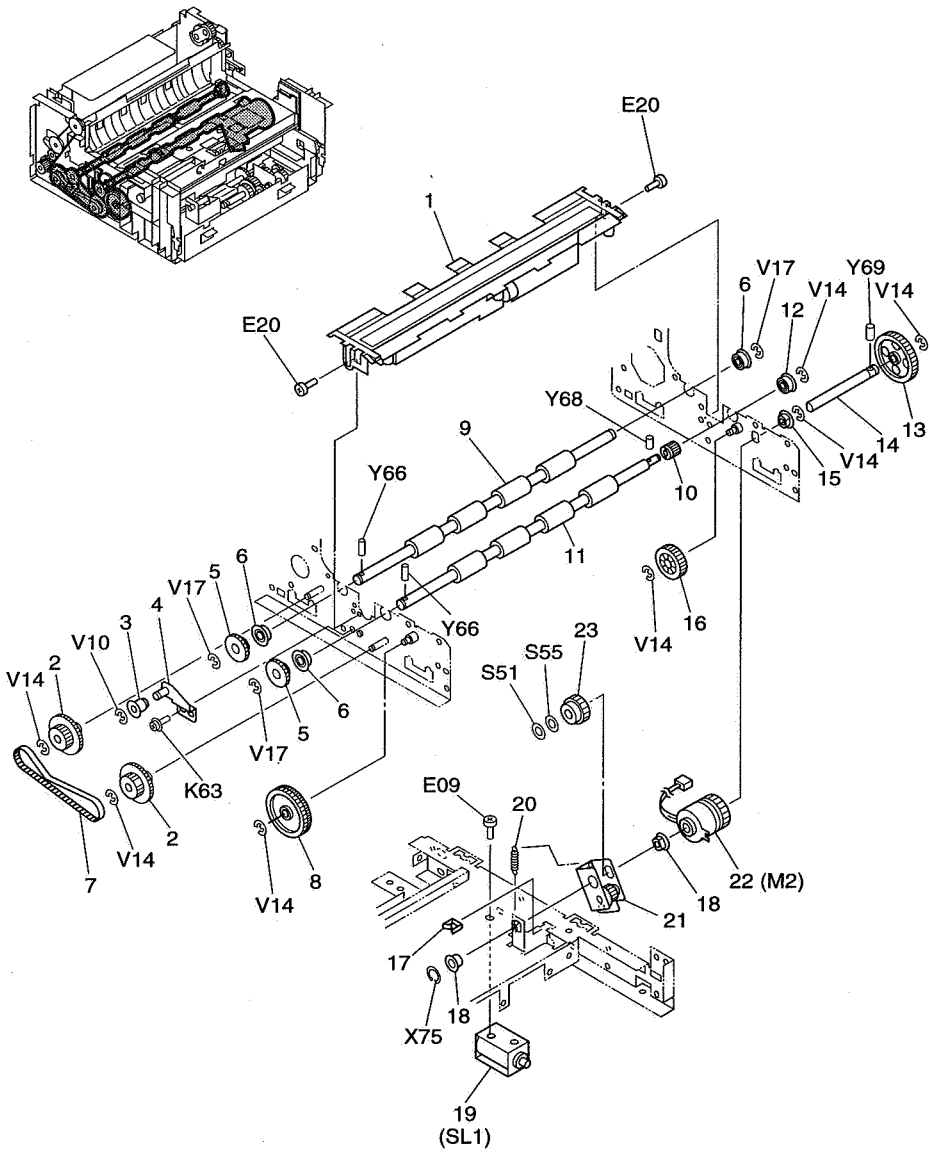

E05

COPYRIGHT©1996 CANON INC. CANON DR-3020 REV.0 MAR. 1996 PRINTED IN JAPAN (IMPRIME AU JAPON)

FIGURE & KEY NO.	PARTS NUMBER	RANK	Q'TY	DESCRIPTION	REMARKS
151 - 1	MG1-2507-000		1	READER GUIDE UPPER ASSEMBLY ヨミトリ ガイド ウエ ユニット	
2	MS1-0887-000		2	GEAR, COMMUNICATION デンタツ ギヤ	
3	MS1-6092-000		1	IDLER アイドラ	
4	MF1-3558-000	N	1	PLATE, IDLER アイドラ シジイタ	
5	MS1-0888-000		2	GEAR, READER ROLLER DRIVE ヨミトリ ローラ クドウ ギア	
6	XG3-8012-355		3	BEARING, BALL フランジツキ ジクウケ	
7	XF9-0592-000		1	TIMMING BELT, W4 L220 ベルト	
8	MS1-0894-000		1	GEAR, DRIVE C クドウ ギア C	
9	MA2-4425-000		1	ROLLER, READER DRIVE, REAR ヨミトリ クドウ ローラ (ウシロ)	
10	MS1-0889-000		1	GEAR, READER ヨミトリ ギア	
11	MA2-4424-000		1	ROLLER, READER DRIVE, FRONT ヨミトリ クドウ ローラ (マエ)	
12	XG3-6012-405		1	BEARING, BALL フランジツキ ジクウケ	
13	MS1-0890-000		1	GEAR, RESIST IDLE レジスト アイドル ギア	
14	MA2-4430-000	N	1	SHAFT, DRIVE, RESIST レジスト クドウ ジク	
15	MS1-0144-000		1	BUSHING メタル ジクウケ	
16	MS1-0863-000		1	GEAR, ADJUSTING A オクリ チョウセイ ギア A	
17	WT2-5035-000		1	CLAMP, CABLE エッジ サドル	
18	FS1-1205-000		2	BUSHING ジクウケ	
19	MF1-3563-000		1	SOLENOID ソレノイド	
20	MS1-2361-000		1	SPRING, SEPARATION ブンリ バネ	
21	MF1-3647-000	N	1	CONNECTING PLATE ソレノイド トリツケイタ	
22	MH7-5041-000		1	CLUTCH, DC DC クラッチ	
23	MS1-0896-000		1	GEAR, 36T クドウ ギア 36T	

E06

COPYRIGHT©1996 CANON INC. CANON DR-3020 REV.0 MAR. 1996 PRINTED IN JAPAN (IMPRIME AU JAPON)

FIGURE 152 INTERNAL COMPONENTS-3
本体機械内部－3

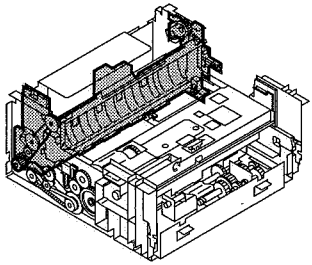

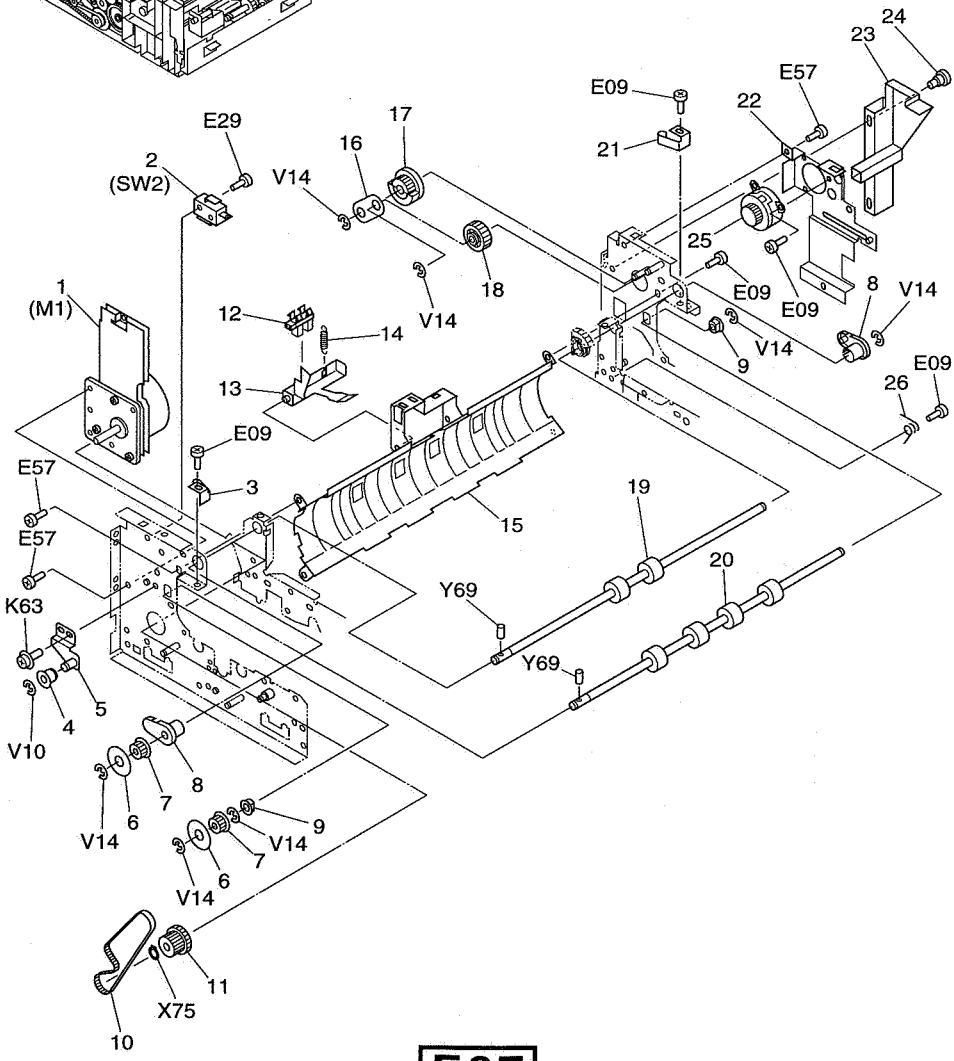

E07

COPYRIGHT©1996 CANON INC. CANON DR-3020 REV.0 MAR. 1996 PRINTED IN JAPAN (IMPRIME AU JAPON)

FIGURE & KEY NO.	PARTS NUMBER	RANK	Q'TY	DESCRIPTION	REMARKS
152 – 1	MH7-1113-000		1	MOTOR UNIT, DC 6.5W ＤＣ　ブラシレス　モータ	
2	FH7-6252-000		1	SWITCH, INTERLOCK インターロック　スイッチ	
3	MA2-4453-000	N	1	SPRING, PLATE, GROUNDING, LEFT アース　バネ　ヒダリ	
4	MS1-6092-000		1	IDLER アイドラ	
5	MF1-3558-000	N	1	PLATE, IDLER アイドラ　ユニット	
6	MA2-4530-000	N	2	FLANGE フランジ	
7	MS1-3100-000		2	PULLEY, DRIVE ROLLER, DELIVERY ハイシ　ローラ　クドウ　プーリ	
8	MA2-4443-000		2	BUSHING ジクウケ	
9	FS1-1205-000		5	BUSHING ジクウケ	
10	XF9-0593-000		1	TIMMING BELT, W4 L260 ベルト	
11	MS1-0886-000		1	GEAR, MOTOR モータ　ギア	
12	FH7-7326-000		1	PHOTOINTERRUPTER フォトインタラプタ	
13	MA2-4438-000	N	1	PLATE, HOLDER, PAPER, DELIVERY ハイシ　カミ　オサエ	
14	MS1-2360-000		1	SPRING, TENSION ハイシ　オサエ　バネ	
15	MA2-4437-000	N	1	PLATE, GUIDE, DELIVERY ハイシ　ガイド　イタ	
16	MA2-4427-000	N	1	PLATE, SETTING, SHAFT, DAMPER ダンパ　ジク　コテイ　イタ	
17	MS1-0893-000		1	GEAR, 18T/24T ギア　１８Ｔ／２４Ｔ	
18	MS1-0892-000		1	GEAR, 24T ギア　２４Ｔ	
19	MA2-4436-000		1	ROLLER, DELIVERY DRIVE 2 ハイシ　クドウ　ローラ　２	
20	MA2-4423-000		1	ROLLER, DELIVERY DRIVE 1 ハイシ　クドウ　ローラ　１	
21	MA2-4454-000	N	1	SPRING, PLATE, GROUNDING, RIGHT アース　バネ　ミギ	
22	MF1-3561-000	N	1	PLATE, DAMPER ダンパ　トリツケイタ	
23	MA2-4428-000	N	1	LEVER, SWITCH スイッチ　レバー	
24	FS1-9009-000		3	SCREW, STEPPED ダンピス	
25	XH9-0093-000		1	DAMPER, OIL オイル　ダンパ	
26	MA2-4532-000		1	SPRING, SWITCH LEVER スイッチ　レバー　バネ	

E08

COPYRIGHT©1996 CANON INC.　CANON DR-3020 REV.0 MAR. 1996 PRINTED IN JAPAN (IMPRIME AU JAPON)

FIGURE 200 PICK-UP TRAY ASSEMBLY
原稿積載板部

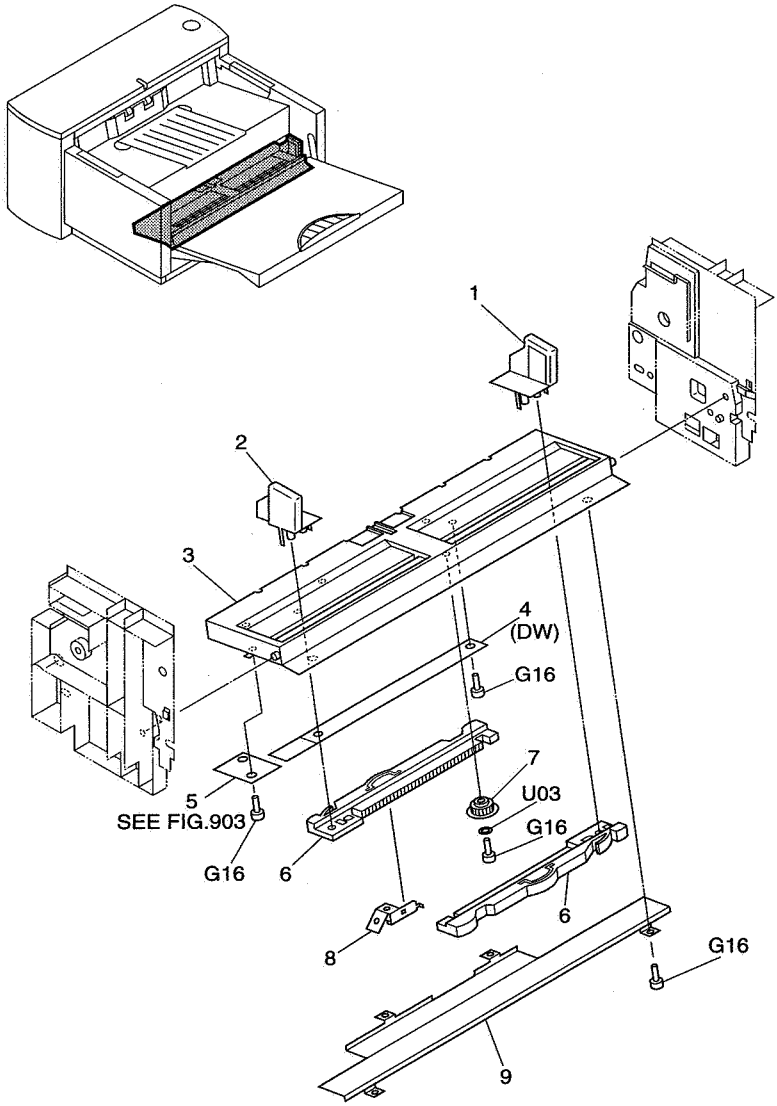

E09

COPYRIGHT©1996 CANON INC. CANON DR-3020 REV.0 MAR. 1996 PRINTED IN JAPAN (IMPRIME AU JAPON)

FIGURE & KEY NO.	PARTS NUMBER	RANK	Q'TY	DESCRIPTION	REMARKS
200 – 1	MF1-3552-000	N	1	PLATE, LIMIT, PICK-UP TRAY, RIGHT ゲンコウ キセイイタ ミギ	
2	MF1-3553-000	N	1	PLATE, LIMIT, PICK-UP TRAY, LEFT ゲンコウ キセイイタ ヒダリ	
3	MF1-3551-000	N	1	PLATE, PICK-UP TRAY ゲンコウ セキサイイタ	
4	MH7-7026-000		1	SENSOR, RESISTOR MULTI-SIZE マルチ サイズ センサ	
5	MG1-2488-000		1	DOCUMENT WIDTH DETECT PCB ASSEMBLY カミハバ ケンチ カイロキバン	
6	MA2-4380-000	N	2	RACK, GUIDE ガイド ラック	
7	MS1-0714-000		1	GEAR, RACK ラック ギア	
8	MA2-4382-000	N	1	SPRING, LEAF センサ オシアツ バネ	
9	MA2-4383-000	N	1	COVER, PICK-UP TRAY ゲンコウダイ カバー	

COPYRIGHT©1996 CANON INC. CANON DR-3020 REV.0 MAR. 1996 PRINTED IN JAPAN (IMPRIME AU JAPON)

FIGURE 210 PICK-UP TRAY UP-DOWN ASSEMBLY
原稿台昇降部

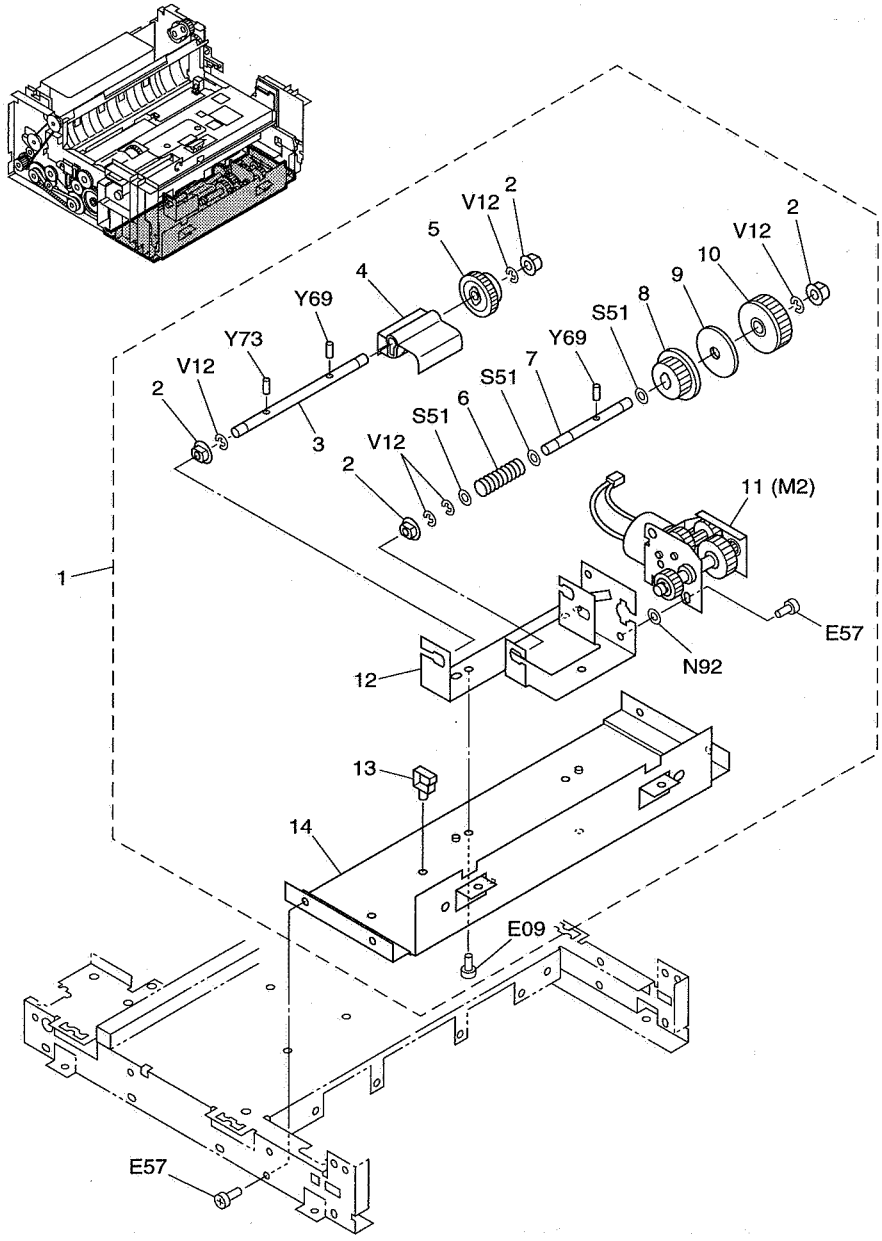

E11

COPYRIGHT©1996 CANON INC. CANON DR-3020 REV.0 MAR. 1996 PRINTED IN JAPAN (IMPRIME AU JAPON)

FIGURE & KEY NO.	PARTS NUMBER	RANK	Q'TY	DESCRIPTION	REMARKS
210 – 1	MG1-2501-000		1	PICK-UP TRAY UP-DOWN ASSEMBLY ゲンコウダイ ショウコウ ユニット	
2	FS1-1205-000		4	BUSHING ジクウケ	
3	MA2-4385-000	N	1	SHAFT, PUSH-UP, PICK-UP TRAY ゲンコウダイ オシアゲ ジク	
4	MA2-4386-000	N	1	LEVER, PUSH-UP, PICK-UP TRAY ゲンコウダイ オシアゲ レバー	
5	MS1-0879-000		1	GEAR, PUSH-UP, PICK-UP TRAY ゲンコウダイ オシアゲ ギア	
6	MS1-2355-000		1	SPRING, FRICTION フリクション バネ	
7	MA2-4387-000	N	1	SHAFT, FRICTION フリクション ジク	
8	MS1-0880-000		1	GEAR, COMMUNICATION オシアゲジク デンタツ ギア	
9	MA2-4388-000	N	1	FRICTION, PICK-UP TRAY フリクション (ゲンコウダイ)	
10	MS1-0881-000		1	GEAR, FRICTION フリクション ギア	
11	FH7-1884-000		1	MOTOR, GEARED, DC 2.6W モータ ブ	
12	MA2-4384-000	N	1	PLATE, MOTOR モータ トリツケイタ	
13	WT2-0317-000		1	CLAMP, CABLE ワイヤ サドル	
14	MA2-4389-000	N	1	BASE PLATE, PICK-UP TRAY ゲンコウダイ ソコイタ	

COPYRIGHT©1996 CANON INC. CANON DR-3020 REV.0 MAR. 1996 PRINTED IN JAPAN (IMPRIME AU JAPON)

FIGURE 220 PICK-UP ASSEMBLY-1
給紙部－1

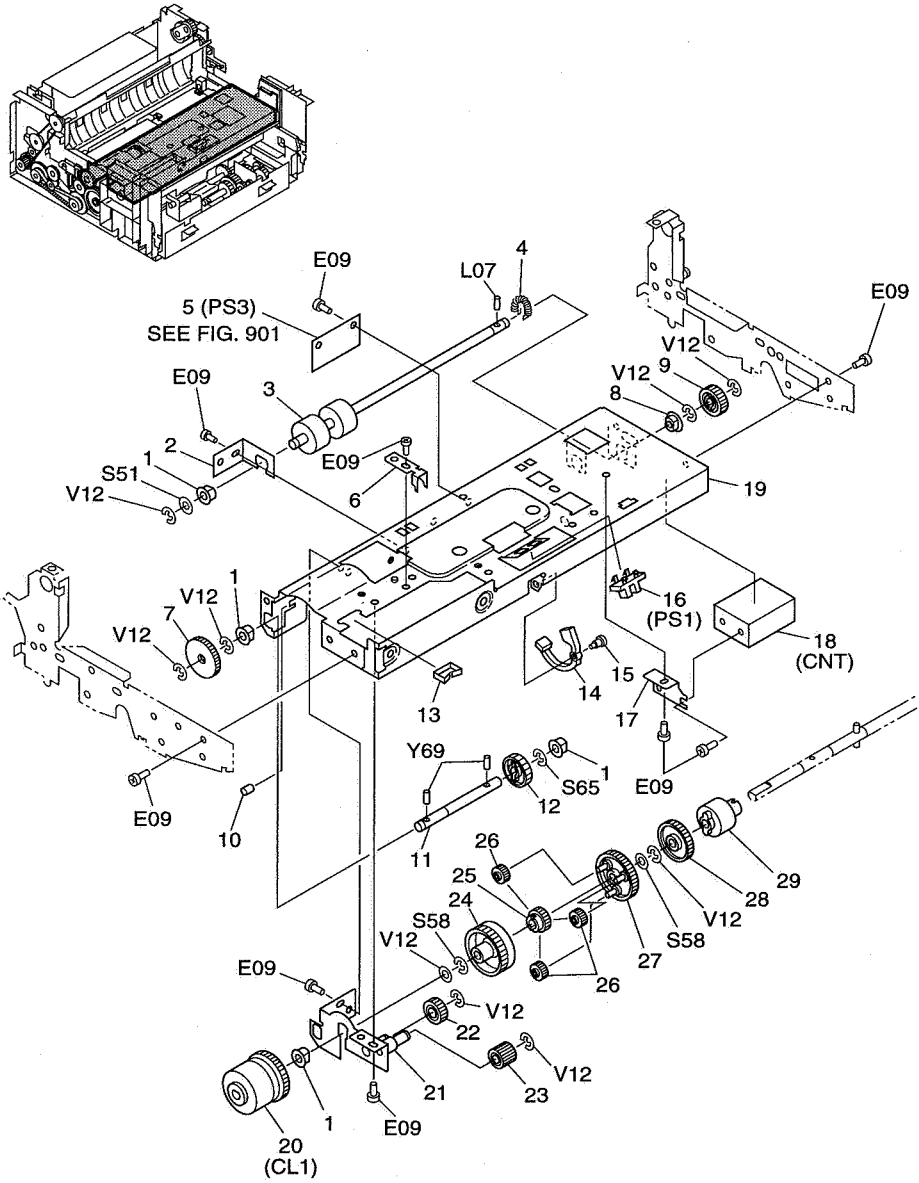

E13

COPYRIGHT©1996 CANON INC. CANON DR-3020 REV.0 MAR. 1996 PRINTED IN JAPAN (IMPRIME AU JAPON)

FIGURE & KEY NO.	PARTS NUMBER	RANK	Q'TY	DESCRIPTION	REMARKS
220 -	MG1-2505-020		1	PICK-UP ASSEMBLY キュウシ ユニット	FIG. 200, 221
1	FS1-1205-000		5	BUSHING ジク ウケ	
2	MA2-4339-000	N	1	PLATE, SUPPORT, SHAFT, RESIST レジスト ジク ジジイタ	
3	MA2-4335-000		1	ROLLER, DRIVE, RESIST レジスト クドウ ローラ	
4	FS2-2342-000		1	SPRING オクリ ローラ バネ	
5	MG1-2486-000		1	PICK-UP SENSOR PCB ASSEMBLY キュウシ センサ カイロキバン	
6	MA2-4340-000	N	1	PLATE, SETTING, GEAR ギア コテイ ブザイ	
7	MS1-0876-000		1	GEAR, DRIVE, B クドウ ギア B	
8	FS1-1422-000		1	BUSHING ジクウケ	
9	MS1-0874-000		1	GEAR, DRIVE, RESIST レジスト クドウ ギア	
10	MA2-4533-000	N	1	TUBE チューブ	
11	MA2-4341-000	N	1	SHAFT, DRIVE, PLANETARY ユウセイ クドウ ジク	
12	MS1-0875-000		1	GEAR, DRIVE, A クドウ ギア A	
13	WT2-0204-000		1	CLAMP, CABLE エッジ サドル	
14	MA2-4343-000	N	1	LEVER, SENSOR, DOCUMENT ゲンコウ ケンチ レバー	
15	FS1-9009-000		1	SCREW, STEPPED ダン ビス	
16	FH7-7326-000		1	PHOTO INTERRAPTER フォトインタラプタ	
17	MA2-4344-000	N	1	PLATE, MOUNTING, COUNTER カウンタ トリツケイタ	
18	MH7-5042-000		1	COUNTER デンジ カウンタ	
19	MA2-4334-000	N	1	STAY ステイ	
20	MH7-5040-000		1	CLUTCH, DC DC クラッチ	
21	MF1-3547-000	N	1	PLATE, SHAFT ジク シジイタ	
22	MS1-0863-000		1	GEAR, ADJUSTING, FEED, A オクリ チョウセイ ギア A	
23	MS1-0864-000		1	GEAR, ADJUSTING, FEED, B オクリ チョウセイ ギア B	
24	MS1-0867-000		1	GEAR, INTERNAL ウチ ハグルマ	
25	MS1-0866-000		1	GEAR, B ギア B	
26	MS1-0865-000		3	GEAR, A ギア A	
27	MS1-0868-000		1	GEAR, CARRIER キャリア ギア	
28	MS1-0870-000		1	GEAR, LIMITER リミッタ ギア	
29	RA2-1582-000		1	LIMITER リミッタ	

COPYRIGHT©1996 CANON INC. CANON DR-3020 REV.0 MAR. 1996 PRINTED IN JAPAN (IMPRIME AU JAPON)

FIGURE 221 PICK-UP ASSEMBLY-2
給紙部－2

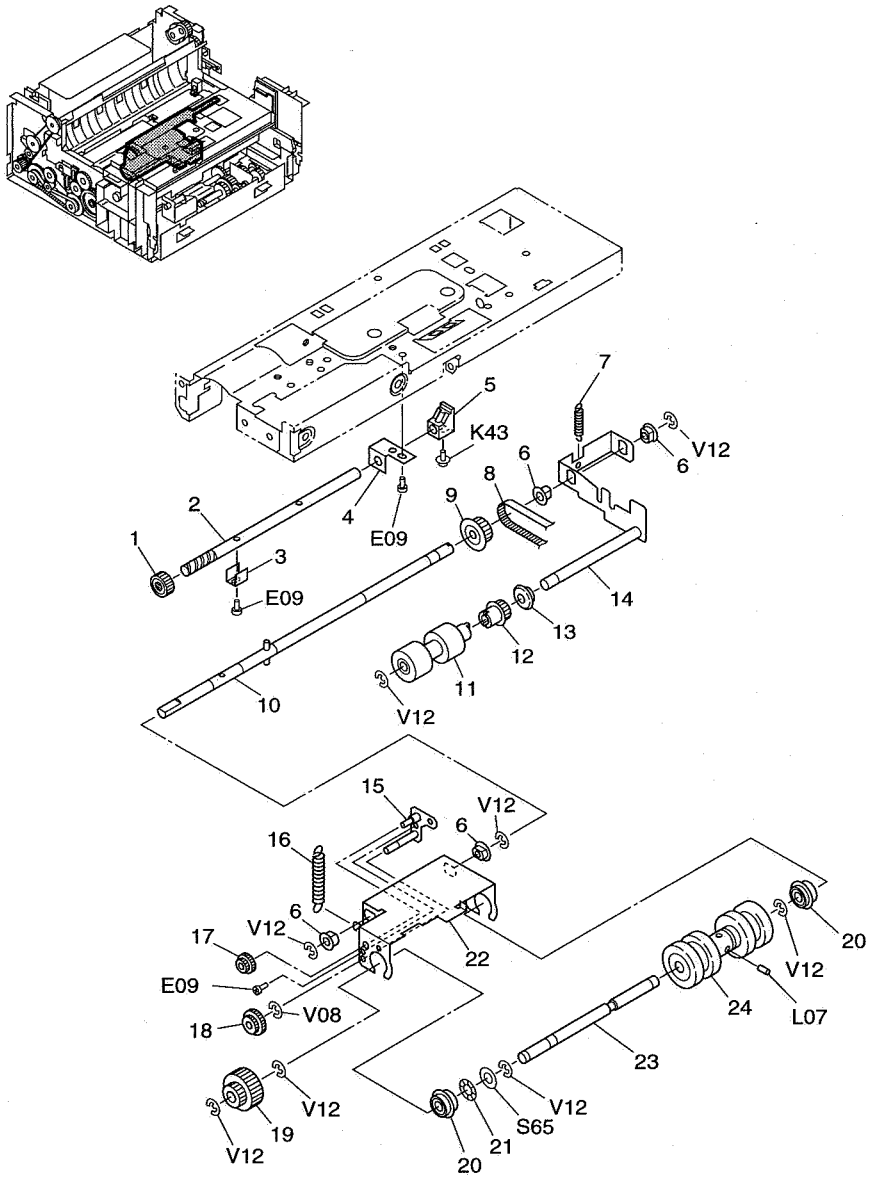

F01

COPYRIGHT©1996 CANON INC. CANON DR-3020 REV.0 MAR. 1996 PRINTED IN JAPAN (IMPRIME AU JAPON)

FIGURE & KEY NO.	PARTS NUMBER	RANK	Q'TY	DESCRIPTION	REMARKS
221 –	MG1-2505-020		1	PICK-UP ASSEMBLY キュウシ ユニット	FIG. 220, 221
1	MS1-0869-000		1	GEAR, FEED ADJUSTING, C オクリ チョウセイ ギア C	
2	MA2-4332-000	N	1	SHAFT, ADJUSTING, FEED オクリ チョウセイ ジク	
3	MA2-4337-000	N	1	STOPPER ストッパ	
4	MA2-4338-000	N	1	PLATE, SUPPORT, SHAFT, ADJUSTING チョウセイ ジク シジイタ	
5	MA2-4336-000	N	1	BLOCK ケイシャ ブザイ	
6	FS1-1205-000		4	BUSHING ジクウケ	
7	MS1-2363-000		1	SPRING, PAPER PICK-UP キュウシ バネ	
8	XF9-0367-000		1	BELT, TIMING タイミング ベルト	
9	MS1-3099-000		1	PULLEY, DRIVE, PICK-UP キュウシ クドウ プーリ	
10	MF1-3562-000	N	1	SHAFT, GEAR ギア ジク	
11	MA2-4321-000		1	ROLLER, PICK-UP キュウシ ローラ	
12	MS1-3098-000		1	PULLEY, PICK-UP キュウシ プーリ	
13	MA2-4323-000	N	1	FLANGE フランジ	
14	MF1-3545-000	N	1	PLATE, SUPPORT, PICK-UP キュウシ シジイタ	
15	MF1-3548-000	N	1	PLATE, GEAR, FEED ギア トリツケイタ (オクリ)	
16	MS1-2352-000		1	SPRING, TENSION オクリ バネ	
17	MS1-0871-000		1	GEAR, IDLE, FEED, A オクリ アイドル ギア A	
18	MS1-0872-000		1	GEAR, IDLE, FEED, B オクリ アイドル ギア B	
19	MS1-0873-000		1	GEAR, FEED オクリ ギア	
20	XG9-0306-000		2	BEARING ベアリング	
21	X71-9773-000		1	WASHER, WAVE ナミ ワッシャ	
22	MA2-4330-000	N	1	PLATE, SUPPORT, FEED オクリ シジ イタ	
23	MA2-4333-000	N	1	SHAFT, ROLLER, FEED オクリ ローラ ジク	
24	MA2-4342-000		1	ROLLER, FEED オクリ ローラ	

F02

COPYRIGHT©1996 CANON INC. CANON DR-3020 REV.0 MAR. 1996 PRINTED IN JAPAN (IMPRIME AU JAPON)

FIGURE 230 DELIVERY ASSEMBLY
排紙部

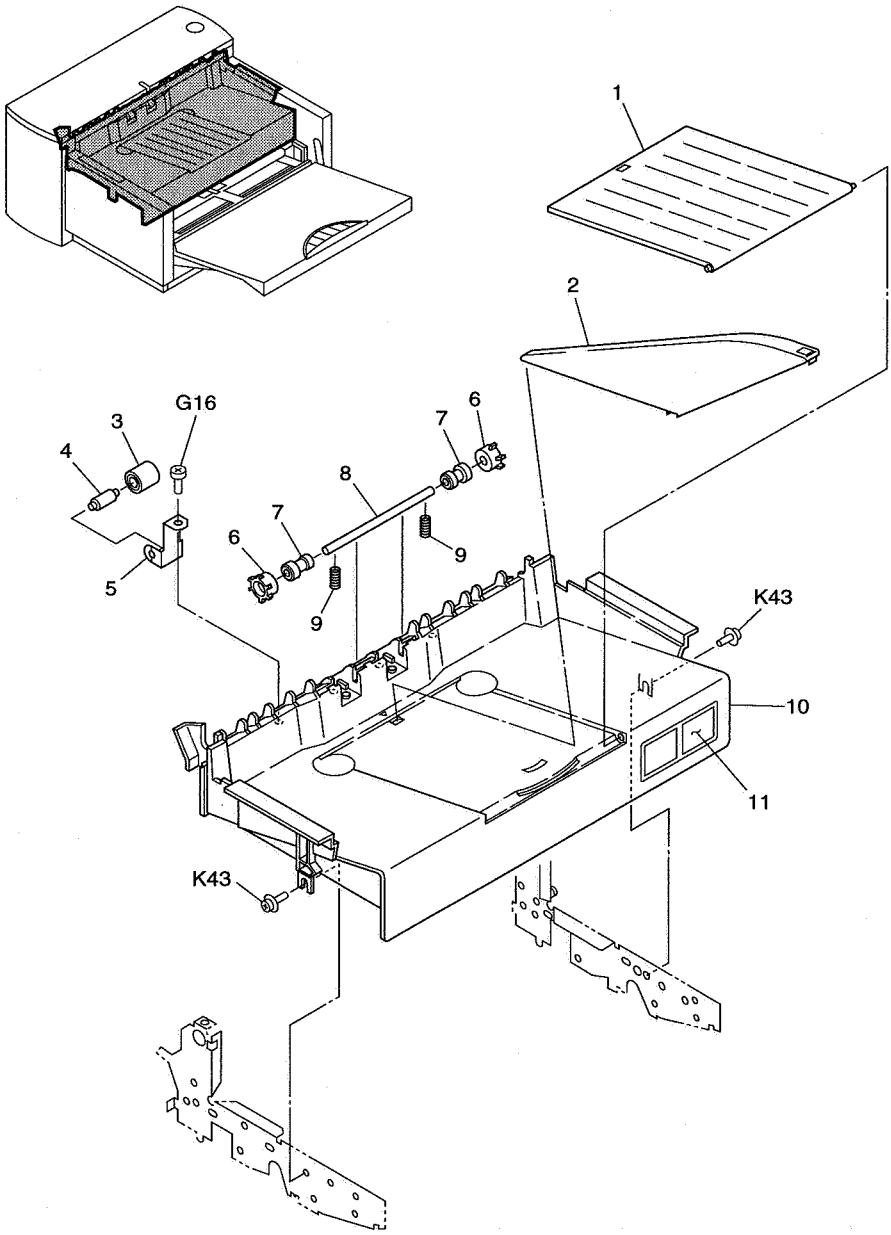

F03

COPYRIGHT©1996 CANON INC. CANON DR-3020 REV.0 MAR. 1996 PRINTED IN JAPAN (IMPRIME AU JAPON)

FIGURE & KEY NO.	PARTS NUMBER	RANK	Q'TY	DESCRIPTION	REMARKS
230 – 1	MA2-4346-000		1	TRAY, DELIVERY ハイシ トレイ	
2	MA2-4531-000	N	1	GUIDE, AUXILIARY, DELIVERY ハイシ ホジョ トレイ	
3	MS1-6088-000		4	ROLLER, IDLE アイドル ローラ	
4	MA2-4348-000	N	4	SHAFT, ROLLER, DELIVERY 1 ハイシ ジュウドウ ローラ 1 ジク	
5	MA2-4347-000	N	4	SPRING, PLATE ハイシ ジュウドウ ローラ 1 バネ	
6	MA2-4349-000		2	ROLLER, DELIVERY 2 ハイシ ジュウドウ ローラ 2	
7	MA2-4351-000		2	ROLLER, STTOPPER, DELIVERY ハイシ ダンツキ コロ	
8	MA2-4350-000	N	1	SHAFT, DELIVERY ROLLER 2 ハイシ ジュウドウ ローラ 2 ジク	
9	MS1-2354-000		2	SPRING, COMPRESSION ハイシ ジュウドウ ローラ 2 バネ	
10	MF1-3567-000	N	1	PANEL, DELIVERY ハイシ カバー	
11	MA2-4352-000		1	LABEL, JAM REMOVAL ジャム ショリ ラベル	

COPYRIGHT©1996 CANON INC. CANON DR-3020 REV.0 MAR. 1996 PRINTED IN JAPAN (IMPRIME AU JAPON)

FIGURE 240 SEPARATION GUIDE PLATE ASSEMBLY
分離ガイド板部

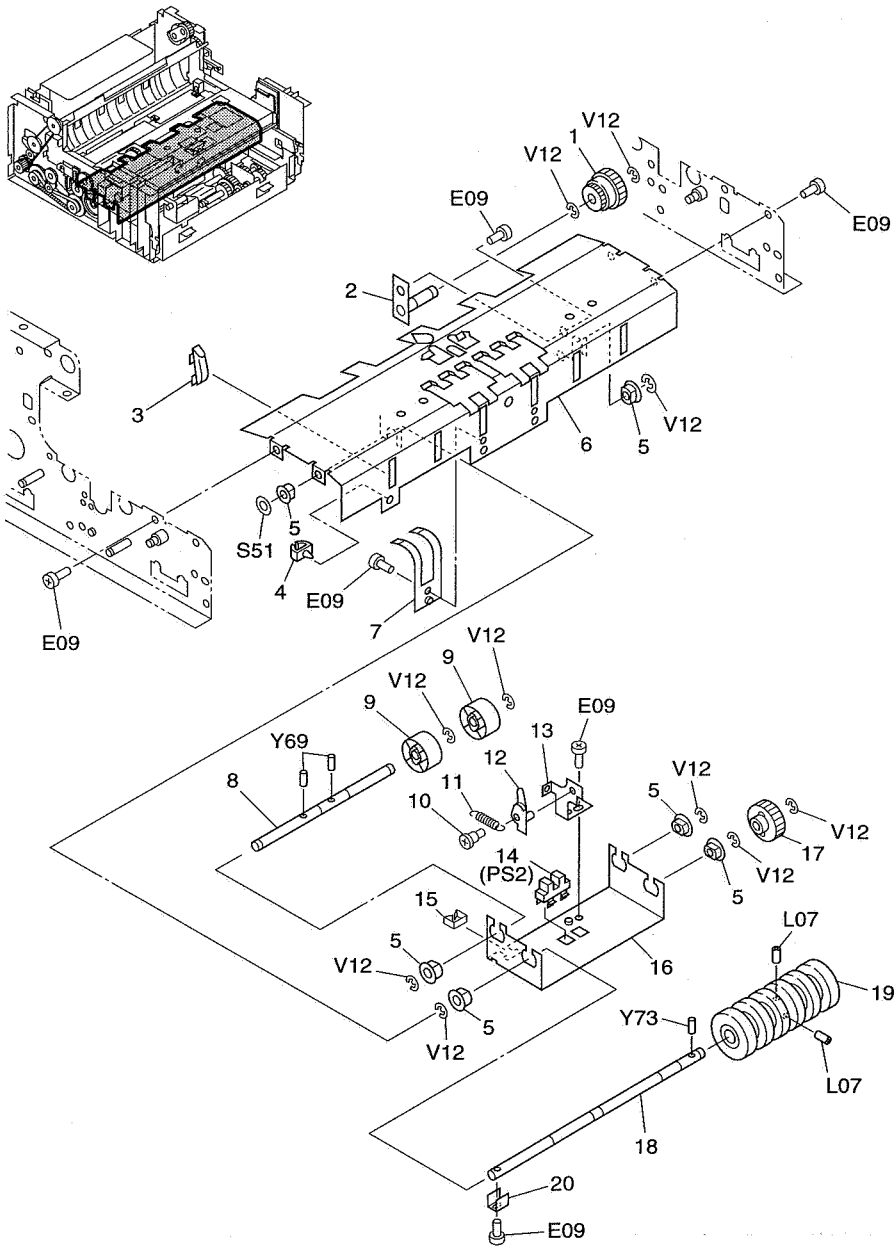

F05

COPYRIGHT©1996 CANON INC. CANON DR-3020 REV.0 MAR. 1996 PRINTED IN JAPAN (IMPRIME AU JAPON)

FIGURE & KEY NO.	PARTS NUMBER	RANK	Q'TY	DESCRIPTION	REMARKS
240 – 1	MS1-0900-000		1	GEAR, DRIVE, 40T/30T クドウ ギア	
2	MF1-3565-000	N	1	PLATE, MOUNTING, SEPARATION UNIT ブンリ ブ トリツケイタ	
3	MA2-4401-000	N	6	RIB, GUIDE, LOWER シタ ガイド リブ	
4	WT2-0408-000		1	CLAMP, CABLE ミニ クランプ	
5	FS1-1205-000		6	BUSHING ジクウケ	
6	MA2-4400-000	N	1	PLATE, GUIDE, LOWER シタ ガイド イタ	
7	MA2-4459-000		2	SPRING, PAPER FEED ROLLAR オクリ ローラ オサエ バネ	
8	MA2-4394-000	N	1	SHAFT, RESIST レジスト ジュウドウ ジク	
9	MS1-6090-000		2	ROLLER, RESIST レジスト ジュウドウ ローラ	
10	FS1-9009-000		1	SCREW, STEPPED ダン ビス	
11	MS1-2362-000		1	SPRING, LEVER レバー バネ	
12	MA2-4395-000	N	1	LEVER, SENSOR, SKEW FEED シャコウ ケンチ レバー	
13	MA2-4402-000	N	1	MOUNT, LEVER レバー トリツケイタ	
14	FH7-7326-000		1	PHOTOINTERRAPTER フォトインタラプタ	
15	WT2-5035-000		1	CLAMP, CABLE エッジ サドル	
16	MA2-4398-000	N	1	PLATE, SUPPORT, SEPARATION ブンリ シジ イタ	
17	MS1-0901-000		1	GEAR, DRIVE, 42T ギア	
18	MA2-4396-000	N	1	SHAFT, ROLLER, SEPARATION ブンリ ローラ ジク	
19	MA2-4399-000		1	ROLLAR, SEPARATION ブンリ ローラ	
20	MA2-4337-000	N	1	STOPPER ストッパ	

COPYRIGHT©1996 CANON INC. CANON DR-3020 REV.0 MAR. 1996 PRINTED IN JAPAN (IMPRIME AU JAPON)

FIGURE 300 UPPER ASSEMBLY
上部ユニット

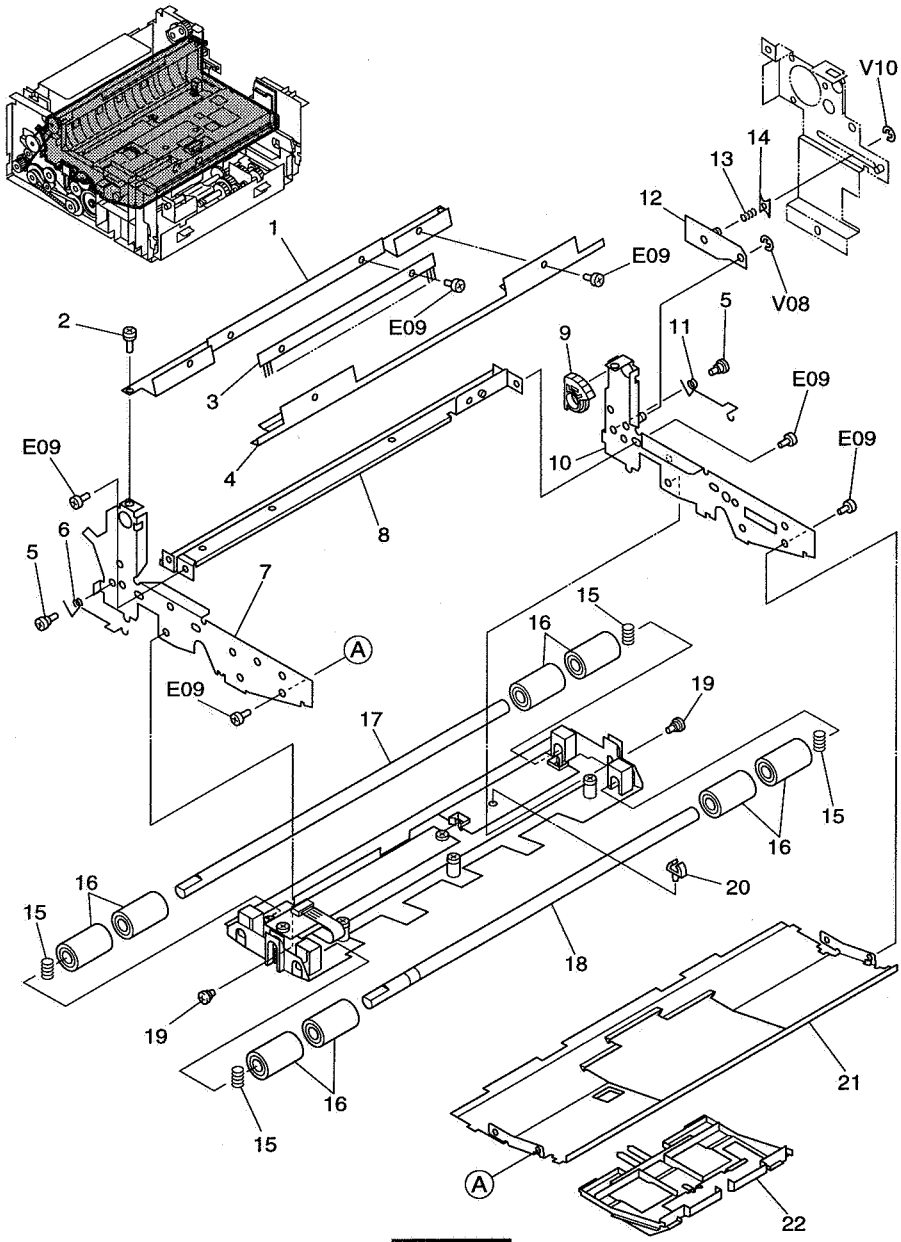

F07

COPYRIGHT©1996 CANON INC. CANON DR-3020 REV.0 MAR. 1996 PRINTED IN JAPAN (IMPRIME AU JAPON)

FIGURE & KEY NO.	PARTS NUMBER	RANK	Q'TY	DESCRIPTION	REMARKS
300 – 1	MA2-4440-000	N	1	PLATE, BRUSH, ELIMINATOR ジョデン ブラシ ステイ	
2	XA9-0385-000		2	SCREW, W/WASHER M3x6 キクザツキ ネジ	
3	WR8-0001-000		1	STATIC, ELIMINATOR ジョデン キ	
4	MA2-4441-000	N	1	COVER, BRUSH, ELIMINATOR ジョデン ブラシ カバー	
5	FS1-9102-000		2	SCREW, STEPPED, M3 ダン ビス	
6	MA2-4411-000		1	SPRING, PRESSURE, SCANNER, LEFT ヨミトリ オシアツ バネ (ヒダリ)	
7	MF1-3566-000	N	1	PLATE, SIDE, LEFT UPPER ヒダリ ウエ ソクバン	
8	MA2-4363-000		1	GUIDE, CABLE タバセン ステイ	
9	MS1-0891-000		1	GEAR, SECTOR オオギ ガタ ギア	
10	MF1-3549-040	N	1	PLATE, SIDE, RIGHT UPPER ミギ ウエ ソクバン	
11	MA2-4412-000		1	SPRING, PRESSURE, SCANNER, RIGHT ヨミトリ オシアツ バネ (ミギ)	
12	MF1-3555-000	N	1	PLATE, STOPPER ストッパ イタ	
13	MS1-2359-000		1	SPRING, COMPRESSION ストッパ バネ	
14	MA2-4410-000	N	1	PLATE, ROTATION カイテン イタ	
15	MS1-2353-000		4	SPRING, SUPPORT, SHAFT ジク オサエ バネ	
16	MS1-6089-000		8	ROLLER, SCANNER ヨミトリ ジュウドウ ローラ	
17	MA2-4360-000	N	1	SHAFT, SCANNER GUIDE, REAR ヨミトリ ジュウドウ ローラ ジク (ウシロ)	
18	MA2-4359-000	N	1	SHAFT, SCANNER GUIDE, FRONT ヨミトリ ジュウドウ ローラ ジク (マエ)	
19	FS1-9009-000		2	SCREW, STEPPED ダン ビス	
20	WT8-0408-000		1	CLAMP, CABLE ミニ クランプ	
21	MA2-4367-000	N	1	PLATE, GUIDE, UPPER ウエ ガイド イタ	
22	MA2-4368-000	N	1	PLATE, GUIDE, UPPER ウエ ガイド ホジョイタ	

COPYRIGHT©1996 CANON INC. CANON DR-3020 REV.0 MAR. 1996 PRINTED IN JAPAN (IMPRIME AU JAPON)

FIGURE 900 CONNECTOR PCB ASSEMBLY
中継回路基板

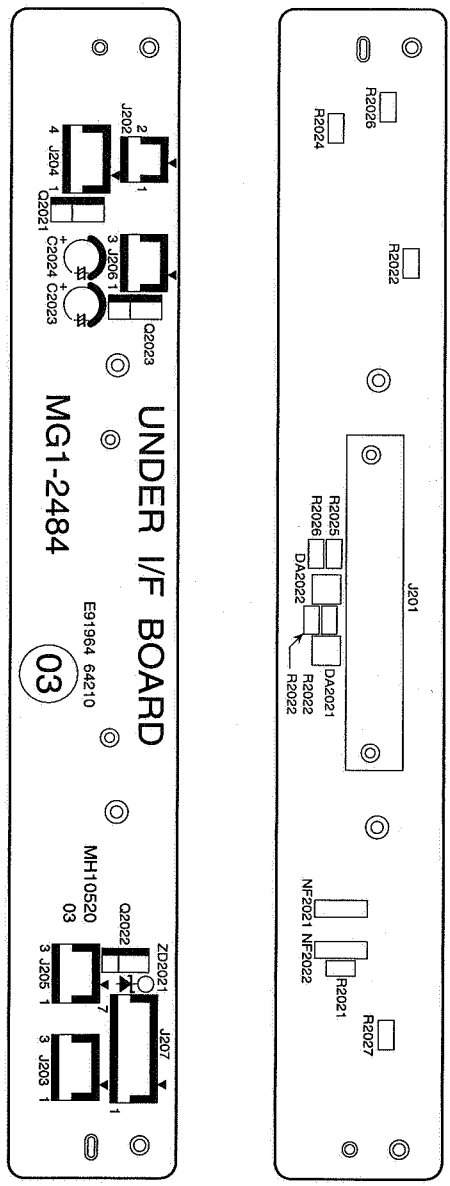

F09

COPYRIGHT©1996 CANON INC. CANON DR-3020 REV.0 MAR. 1996 PRINTED IN JAPAN (IMPRIME AU JAPON)

FIGURE & KEY NO.	PARTS NUMBER	RANK	Q'TY	DESCRIPTION	REMARKS
900 –	MG1-2484-000		1	CONNECTOR PCB ASSEMBLY チュウケイ カイロキバン	
C2023	VC5-2250-475		1	CAPACITOR, AL-EL., 4.7 μF 50V アルミ デンカイ コンデンサ	
C2024	VC5-2250-475		1	CAPACITOR, AL-EL., 4.7 μF 50V アルミ デンカイ コンデンサ	
C2025	VW4-2037-104		1	CAPACITOR, CERAMIC, 0.1 μF 50V セラミック コンデンサ	
C2026	VW4-2037-104		1	CAPACITOR, CERAMIC, 0.1 μF 50V セラミック コンデンサ	
C2027	VW4-2037-104		1	CAPACITOR, CERAMIC, 0.1 μF 50V セラミック コンデンサ	
DA2021	WA1-0881-000		1	DIODE ARAY, DA204K ダイオード アレイ	
DA2022	WA1-0881-000		1	DIODE ARAY, DA204K ダイオード アレイ	
J2201	VS1-0746-032		1	CONNECTOR, 32P コネクタ	
J2202	VS1-1028-002		1	CONNECTOR, 2P コネクタ	
J2203	VS1-1028-004		1	CONNECTOR, 4P コネクタ	
J2204	VS1-1028-004		1	CONNECTOR, 4P コネクタ	
J2205	VS1-1028-003		1	CONNECTOR, 3P コネクタ	
J2206	VS1-1028-003		1	CONNECTOR, 3P コネクタ	
J2207	VS1-1028-007		1	CONNECTOR, 7P コネクタ	
NF2021	WE2-5072-000		1	CHIP BEAD チップ ビーズ	
NF2022	WE2-5072-000		1	CHIP BEAD チップ ビーズ	
Q2021	WA2-5067-000		1	TRANSISTOR, 2SD1866TV2 トランジスタ	
Q2022	WA2-5067-000		1	TRANSISTOR, 2SD1866TV2 トランジスタ	
Q2023	WA2-5067-000		1	TRANSISTOR, 2SD1866TV2 トランジスタ	
R2021	VV1-7118-472		1	RESISTOR, 4.7K Ω 1/10W テイコウ	
R2022	VV1-7118-472		1	RESISTOR, 4.7K Ω 1/10W テイコウ	
R2023	VV1-7118-472		1	RESISTOR, 4.7K Ω 1/10W テイコウ	
R2024	VV1-7118-102		1	RESISTOR, 1K Ω 1/10W テイコウ	
R2025	VV1-7118-102		1	RESISTOR, 1K Ω 1/10W テイコウ	
R2026	VV1-7118-151		1	RESISTOR, 150 Ω 1/10W テイコウ	
ZD2021	WA1-5980-000		1	ZENER DIODE, HZS3A2 ツェナー ダイオード	

COPYRIGHT©1996 CANON INC. CANON DR-3020 REV.0 MAR. 1996 PRINTED IN JAPAN (IMPRIME AU JAPON)

FIGURE 901 PICK-UP SENSOR PCB ASSEMBLY
給紙センサ回路基板

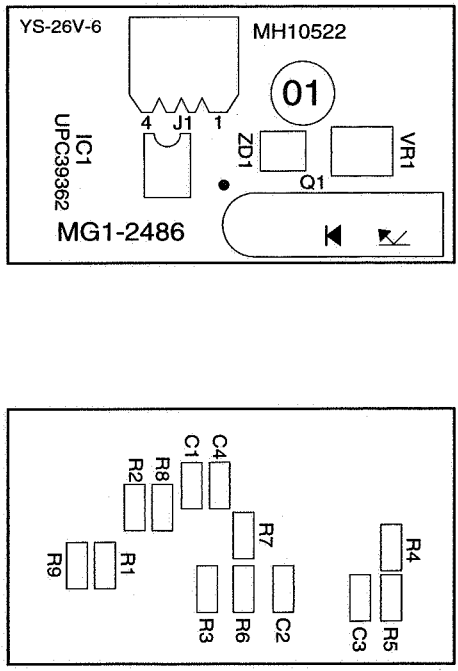

 COPYRIGHT©1996 CANON INC. CANON DR-3020 REV.0 MAR. 1996 PRINTED IN JAPAN (IMPRIME AU JAPON)

FIGURE & KEY NO.	PARTS NUMBER	RANK	Q'TY	DESCRIPTION	REMARKS
901 –	MG1-2486-000		1	PICK-UP SENSOR PCB ASSEMBLY キュウシ センサ カイロキバン	
C1	VW4-2027-104		1	CAPACITOR, CERAMIC, 0.1 μF 25V セラミック コンデンサ	
C2	VW4-2835-102		1	CAPACITOR, CERAMIC, 1000pF 50V セラミック コンデンサ	
C3	VW4-2835-102		1	CAPACITOR, CERAMIC, 1000pF 50V セラミック コンデンサ	
C4	VW4-2027-103		1	CAPACITOR, CERAMIC, 0.01 μF 25V セラミック コンデンサ	
IC1	WA4-5164-000		1	IC, COMPARATOR, μPC393G2 コンパレータ IC	
J1	VS1-1029-004		1	CONNECTOR, 4P コネクタ	
Q1	WG8-5003-000		1	PHOTOREFLECTOR フォトリフレクタ	
R1	VV1-7118-331		1	RESISTOR, 330 Ω 1/10W テイコウ	
R2	VV1-7118-103		1	RESISTOR, 10K Ω 1/10W テイコウ	
R3	VV1-7118-563		1	RESISTOR, 56K Ω 1/10W テイコウ	
R4	VV1-7118-822		1	RESISTOR, 8.2K Ω 1/10W テイコウ	
R5	VV1-7118-153		1	RESISTOR, 15K Ω 1/10W テイコウ	
R6	VV1-7118-105		1	RESISTOR, 1M Ω 1/10W テイコウ	
R7	VV1-7118-103		1	RESISTOR, 10K Ω 1/10W テイコウ	
R8	VV1-7118-101		1	RESISTOR, 100 Ω 1/10W テイコウ	
VR1	VR7-3340-504		1	RESISTOR, VARIABLE, ST33A500K カヘン テイコウ	
ZD1	WA1-5508-000		1	ZENER DIODE, HZM3.9NB2 ツェナー ダイオード	

COPYRIGHT©1996 CANON INC. CANON DR-3020 REV.0 MAR. 1996 PRINTED IN JAPAN (IMPRIME AU JAPON)

FIGURE 902 LED PCB ASSEMBLY
LED 回路基板

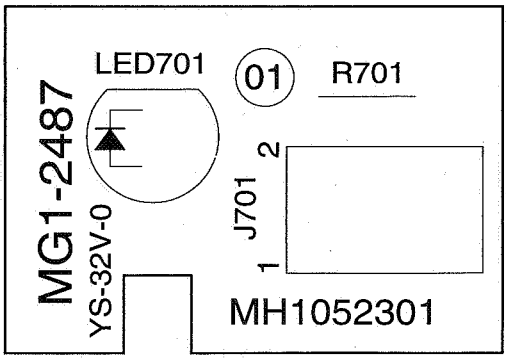

F13

COPYRIGHT©1996 CANON INC. CANON DR-3020 REV.0 MAR. 1996 PRINTED IN JAPAN (IMPRIME AU JAPON)

FIGURE & KEY NO.	PARTS NUMBER	RANK	Q'TY	DESCRIPTION	REMARKS
902 –	MG1-2487-000		1	LED PCB ASSEMBLY ＬＥＤ　カイロキバン	
J701	VS1-1029-002		1	CONNECTOR, 2P コネクタ	
LED701	WG1-5302-000		1	LED, GL5KG8 ＬＥＤ　ＩＣ	
R701	VR5-3680-151		1	RESISTOR, CARBON, 150 Ω 1/4W カーボン　テイコウ	

F14

COPYRIGHT©1996 CANON INC. CANON DR-3020 REV.0 MAR. 1996 PRINTED IN JAPAN (IMPRIME AU JAPON)

FIGURE 903 DOCUMENT WIDTH CONNECTOR PCB ASSEMBLY
紙幅検知中継回路基板

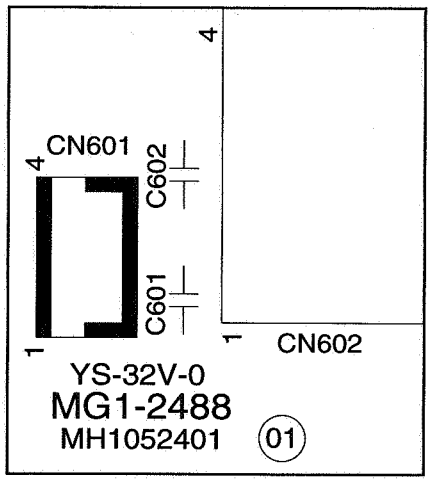

G01

COPYRIGHT©1996 CANON INC. CANON DR-3020 REV.0 MAR. 1996 PRINTED IN JAPAN (IMPRIME AU JAPON)

FIGURE & KEY NO.	PARTS NUMBER	RANK	Q'TY	DESCRIPTION	REMARKS
903 -	MG1-2488-000		1	DOCUMENT WIDTH CONNECTOR PCB ASSEMBLY カミハバ ケンチ チュウケイ カイロキバン	
C601	VC6-0620-104		1	CAPACITOR, CERAMIC, 0.1 μF 50V セラミック コンデンサ	
C602	VC6-0620-104		1	CAPACITOR, CERAMIC, 0.1 μF 50V セラミック コンデンサ	
J601	VS1-1028-004		1	CONNECTOR, 4P コネクタ	
J602	VS1-6043-004		1	CONNECTOR, 4P コネクタ	

G02

COPYRIGHT©1996 CANON INC. CANON DR-3020 REV.0 MAR. 1996 PRINTED IN JAPAN (IMPRIME AU JAPON)

FIGURE C NUMERICAL INDEX
部品索引表

PARTS NO.	FRAME-ADDRESS,FIG.-KEY NUMBER	Q'TY	PARTS NO.	FRAME-ADDRESS,FIG.-KEY NUMBER	Q'TY	PARTS NO.	FRAME-ADDRESS,FIG.-KEY NUMBER	Q'TY
FA9-2113-000	1F-E04,150-20	1	MA2-4350-000	1F-F04,230-08	1	MA2-4440-000	1F-F08,300-01	1
			MA2-4351-000	1F-F04,230-07	2	MA2-4441-000	1F-F08,300-04	1
FH2-5006-000	1F-E04,150-04	1	MA2-4352-000	1F-F04,230-11	1	MA2-4443-000	1F-E08,152-08	2
			MA2-4359-000	1F-F08,300-18	1	MA2-4447-000	1F-E02,100-06	1
FH7-1884-000	1F-E12,210-11	1	MA2-4360-000	1F-F08,300-17	1	MA2-4448-000	1F-E04,150-08	1
FH7-6252-000	1F-E08,152-02	1	MA2-4363-000	1F-F08,300-08	1	MA2-4449-000	1F-E04,150-14	1
FH7-7326-000	1F-E08,152-12	1	MA2-4367-000	1F-F08,300-21	1	MA2-4450-000	1F-E02,100-11	1
FH7-7326-000	1F-E14,220-16	1	MA2-4368-000	1F-F08,300-22	1	MA2-4451-000	1F-E02,100-14	1
FH7-7326-000	1F-F06,240-14	1	MA2-4380-000	1F-E10,200-06	2	MA2-4453-000	1F-E08,152-03	1
			MA2-4382-000	1F-E10,200-08	1	MA2-4454-000	1F-E08,152-21	1
FS1-1205-000	1F-E06,151-18	2	MA2-4383-000	1F-E10,200-09	1	MA2-4455-000	1F-E04,150-05	2
FS1-1205-000	1F-E08,152-09	5	MA2-4384-000	1F-E12,210-12	1	MA2-4459-000	1F-F06,240-07	2
FS1-1205-000	1F-E12,210-02	4	MA2-4385-000	1F-E12,210-03	1	MA2-4530-000	1F-E08,152-06	2
FS1-1205-000	1F-E14,220-01	5	MA2-4386-000	1F-E12,210-04	1	MA2-4531-000	1F-F04,230-02	1
FS1-1205-000	1F-F02,221-06	4	MA2-4387-000	1F-E12,210-07	1	MA2-4532-000	1F-E08,152-26	1
FS1-1205-000	1F-F06,240-05	6	MA2-4388-000	1F-E12,210-09	1	MA2-4533-000	1F-E14,220-10	1
FS1-1422-000	1F-E14,220-08	1	MA2-4389-000	1F-E12,210-14	1			
FS1-9009-000	1F-E08,152-24	3	MA2-4394-000	1F-F06,240-08	1	MF1-3545-000	1F-F02,221-14	1
FS1-9009-000	1F-E14,220-15	1	MA2-4395-000	1F-F06,240-12	1	MF1-3547-000	1F-E14,220-21	1
FS1-9009-000	1F-F06,240-10	1	MA2-4396-000	1F-F06,240-18	1	MF1-3548-000	1F-F02,221-15	1
FS1-9009-000	1F-F08,300-19	2	MA2-4398-000	1F-F06,240-16	1	MF1-3549-040	1F-F08,300-10	1
FS1-9102-000	1F-F08,300-05	2	MA2-4399-000	1F-F06,240-19	1	MF1-3550-000	1F-E02,100-13	1
			MA2-4400-000	1F-F06,240-06	1	MF1-3551-000	1F-E10,200-03	1
FS2-2342-000	1F-E14,220-04	1	MA2-4401-000	1F-F06,240-03	6	MF1-3552-000	1F-E10,200-01	1
			MA2-4402-000	1F-F06,240-13	1	MF1-3553-000	1F-E10,200-02	1
MA2-3497-000	1F-E04,150-13	1	MA2-4410-000	1F-F08,300-14	1	MF1-3555-000	1F-F08,300-12	1
MA2-4321-000	1F-F02,221-11	1	MA2-4411-000	1F-F08,300-06	1	MF1-3558-000	1F-E06,151-04	1
MA2-4323-000	1F-F02,221-13	1	MA2-4412-000	1F-F08,300-11	1	MF1-3558-000	1F-E08,152-05	1
MA2-4330-000	1F-F02,221-22	1	MA2-4415-000	1F-E02,100-01	1	MF1-3559-000	1F-E02,100-08	1
MA2-4332-000	1F-F02,221-02	1	MA2-4416-000	1F-E02,100-05	1	MF1-3560-000	1F-E02,100-09	1
MA2-4333-000	1F-F02,221-23	1	MA2-4417-000	1F-E02,100-02	1	MF1-3561-000	1F-E08,152-22	1
MA2-4334-000	1F-E14,220-19	1	MA2-4419-000	1F-E04,150-07	2	MF1-3562-000	1F-F02,221-10	1
MA2-4335-000	1F-E14,220-03	1	MA2-4423-000	1F-E08,152-20	1	MF1-3563-000	1F-E06,151-19	1
MA2-4336-000	1F-F02,221-05	1	MA2-4424-000	1F-E06,151-11	1	MF1-3565-000	1F-F06,240-02	1
MA2-4337-000	1F-F02,221-03	1	MA2-4425-000	1F-E06,151-09	1	MF1-3566-000	1F-F08,300-07	1
MA2-4337-000	1F-F06,240-20	1	MA2-4427-000	1F-E08,152-16	1	MF1-3567-000	1F-F04,230-10	1
MA2-4338-000	1F-F02,221-04	1	MA2-4428-000	1F-E08,152-23	1	MF1-3647-000	1F-E06,151-21	1
MA2-4339-000	1F-E14,220-02	1	MA2-4429-000	1F-E02,100-07	1			
MA2-4340-000	1F-E14,220-06	1	MA2-4430-000	1F-E06,151-14	1	MG1-2483-000	1F-E04,150-18	1
MA2-4341-000	1F-E14,220-11	1	MA2-4431-000	1F-E04,150-16	1	MG1-2484-000	1F-E04,150-15	1
MA2-4342-000	1F-F02,221-24	1	MA2-4432-000	1F-E04,150-21	1	MG1-2484-000	1F-F10,900	1
MA2-4343-000	1F-E14,220-14	1	MA2-4433-000	1F-E04,150-19	2	MG1-2486-000	1F-E14,220-05	1
MA2-4344-000	1F-E14,220-17	1	MA2-4434-000	1F-E02,100-10	1	MG1-2486-000	1F-F12,901	1
MA2-4346-000	1F-F04,230-01	1	MA2-4435-000	1F-E02,100-12	1	MG1-2487-000	1F-E02,100-04	1
MA2-4347-000	1F-F04,230-05	4	MA2-4436-000	1F-E08,152-19	1	MG1-2487-000	1F-F14,902	1
MA2-4348-000	1F-F04,230-04	4	MA2-4437-000	1F-E08,152-15	1	MG1-2488-000	1F-E10,200-05	1
MA2-4349-000	1F-F04,230-06	2	MA2-4438-000	1F-E08,152-13	1	MG1-2488-000	1F-G02,903	1

A02

COPYRIGHT©1996 CANON INC. CANON DR-3020 REV.0 MAR. 1996 PRINTED IN JAPAN (IMPRIME AU JAPON)

PARTS NO.	FRAME-ADDRESS,FIG.-KEY NUMBER	Q'TY	PARTS NO.	FRAME-ADDRESS,FIG.-KEY NUMBER	Q'TY	PARTS NO.	FRAME-ADDRESS,FIG.-KEY NUMBER	Q'TY
MG1-2501-000	1F-E12,210-01	1	MS1-0901-000	1F-F06,240-17	1	VV1-7118-105	1F-F12,901	1
MG1-2505-020	1F-E14,220	1	MS1-2352-000	1F-F02,221-16	1	VV1-7118-151	1F-F10,900	1
MG1-2505-020	1F-F02,221	1	MS1-2353-000	1F-F08,300-15	4	VV1-7118-153	1F-F12,901	1
MG1-2507-000	1F-E06,151-01	1	MS1-2354-000	1F-F04,230-09	2	VV1-7118-331	1F-F12,901	1
			MS1-2355-000	1F-E12,210-06	1	VV1-7118-472	1F-F10,900	3
MH2-5256-000	1F-E04,150-17	1	MS1-2358-000	1F-E04,150-06	2	VV1-7118-563	1F-F12,901	1
			MS1-2359-000	1F-F08,300-13	1	VV1-7118-822	1F-F12,901	1
MH3-2032-000	1F-E04,150-09	1	MS1-2360-000	1F-E08,152-14	1			
MH3-2033-000	1F-E04,150-09	1	MS1-2361-000	1F-E06,151-20	1	VW4-2027-103	1F-F12,901	1
			MS1-2362-000	1F-F06,240-11	1	VW4-2027-104	1F-F12,901	1
MH7-1113-000	1F-E08,152-01	1	MS1-2363-000	1F-F02,221-07	1	VW4-2037-104	1F-F10,900	3
MH7-5040-000	1F-E14,220-20	1	MS1-3098-000	1F-F02,221-12	1	VW4-2835-102	1F-F12,901	2
MH7-5041-000	1F-E06,151-22	1	MS1-3099-000	1F-F02,221-09	1			
MH7-5042-000	1F-E14,220-18	1	MS1-3100-000	1F-E08,152-07	2	WA1-0881-000	1F-F10,900	2
MH7-7026-000	1F-E10,200-04	1	MS1-6088-000	1F-F04,230-03	4	WA1-5508-000	1F-F12,901	1
			MS1-6089-000	1F-F08,300-16	8	WA1-5980-000	1F-F10,900	1
MS1-0144-000	1F-E06,151-15	1	MS1-6090-000	1F-F06,240-09	2			
MS1-0714-000	1F-E10,200-07	1	MS1-6092-000	1F-E06,151-03	1	WA2-5067-000	1F-F10,900	3
MS1-0863-000	1F-E06,151-16	1	MS1-6092-000	1F-E08,152-04	1			
MS1-0863-000	1F-E14,220-22	1				WA4-5164-000	1F-F12,901	1
MS1-0864-000	1F-E14,220-23	1	RA2-1582-000	1F-E14,220-29	1			
MS1-0865-000	1F-E14,220-26	3				WE2-5072-000	1F-F10,900	2
MS1-0866-000	1F-E14,220-25	1	RH2-5114-000	1F-E04,150-01	1			
MS1-0867-000	1F-E14,220-24	1	RH2-5115-000	1F-E04,150-02	1	WG1-5302-000	1F-F14,902	1
MS1-0868-000	1F-E14,220-27	1	RH2-5116-000	1F-E04,150-03	1			
MS1-0869-000	1F-F02,221-01	1				WG8-5003-000	1F-F12,901	1
MS1-0870-000	1F-E14,220-28	1	VC5-2250-475	1F-F10,900	2			
MS1-0871-000	1F-F02,221-17	1				WK8-5052-000	1F-E04,150-22	1
MS1-0872-000	1F-F02,221-18	1	VC6-0620-104	1F-G02,903	2			
MS1-0873-000	1F-F02,221-19	1				WR8-0001-000	1F-F08,300-03	1
MS1-0874-000	1F-E14,220-09	1	VR5-3680-151	1F-F14,902	1			
MS1-0875-000	1F-E14,220-12	1				WT2-0204-000	1F-E04,150-10	3
MS1-0876-000	1F-E14,220-07	1	VR7-3340-504	1F-F12,901	1	WT2-0204-000	1F-E14,220-13	1
MS1-0879-000	1F-E12,210-05	1				WT2-0317-000	1F-E04,150-11	1
MS1-0880-000	1F-E12,210-08	1	VS1-0746-032	1F-F10,900	1	WT2-0317-000	1F-E12,210-13	1
MS1-0881-000	1F-E12,210-10	1	VS1-1028-002	1F-F10,900	1	WT2-0408-000	1F-F06,240-04	1
MS1-0886-000	1F-E08,152-11	1	VS1-1028-003	1F-F10,900	2	WT2-5031-000	1F-E04,150-12	1
MS1-0887-000	1F-E06,151-02	2	VS1-1028-004	1F-F10,900	2	WT2-5035-000	1F-E06,151-17	1
MS1-0888-000	1F-E06,151-05	2	VS1-1028-004	1F-G02,903	1	WT2-5035-000	1F-F06,240-15	1
MS1-0889-000	1F-E06,151-10	1	VS1-1028-007	1F-F10,900	1			
MS1-0890-000	1F-E06,151-13	1	VS1-1029-002	1F-F14,902	1	WT8-0408-000	1F-F08,300-20	1
MS1-0891-000	1F-F08,300-09	1	VS1-1029-004	1F-F12,901	1			
MS1-0892-000	1F-E08,152-18	1	VS1-6043-004	1F-G02,903	1	X71-9773-000	1F-F02,221-21	1
MS1-0893-000	1F-E08,152-17	1						
MS1-0894-000	1F-E06,151-08	1	VV1-7118-101	1F-F12,901	1	XA9-0385-000	1F-F08,300-02	2
MS1-0896-000	1F-E06,151-23	1	VV1-7118-102	1F-F10,900	2			
MS1-0900-000	1F-F06,240-01	1	VV1-7118-103	1F-F12,901	2	XD2-2300-502	1F-E02,100-03	1

A03

COPYRIGHT©1996 CANON INC. CANON DR-3020 REV.0 MAR. 1996 PRINTED IN JAPAN (IMPRIME AU JAPON)

PARTS NO.	FRAME-ADDRESS,FIG.-KEY NUMBER	Q'TY	PARTS NO.	FRAME-ADDRESS,FIG.-KEY NUMBER	Q'TY	PARTS NO.	FRAME-ADDRESS,FIG.-KEY NUMBER	Q'TY
XF9-0367-000	1F-F02,221-08	1						
XF9-0592-000	1F-E06,151-07	1						
XF9-0593-000	1F-E08,152-10	1						
XG3-6012-405	1F-E06,151-12	1						
XG3-8012-355	1F-E06,151-06	3						
XG9-0306-000	1F-F02,221-20	2						
XH9-0093-000	1F-E08,152-25	1						
XH9-0100-000	1F-E02,100-15	4						

A04

COPYRIGHT©1996 CANON INC. CANON DR-3020 REV.0 MAR. 1996 PRINTED IN JAPAN (IMPRIME AU JAPON)

FIGURE D LIST OF STANDARD FASTENERS
機械標準部品一覧表

I. SCREWS ····· D-2
A.Machine screws (for precision use) ····· D-3
B.Pan head machine screws ····· D-3
E.Binding head machine screws ····· D-4
F.Flat headmachine screws ····· D-5
G.Self apping screws ····· D-6
H.Pan head machine screws with captive spring washer ····· D-7
J.Pan head machine screws with toothed washer ····· D-7
K.Washer head machine screws ····· D-8
L.Hex socket setscrews and socket head cap screws ····· D-9
II. NUTS ····· D-10
M.Hexagon nuts ····· D-10
III. WASHERS AND SHIM WASHERS ····· D-11
N.S & T. Shim washers ····· D-12
U.Plain washers, spring washers & toothed lock washere ····· D-13
IV. RETAINING RINGS ····· D-14
V.E rings ····· D-14
W.Grip rings ····· D-15
X.C rings ····· D-16
V. PINS ····· D-16
Y.Spring and dowel pins ····· D-16
VI. SPACERS ····· D-17
Z.Spacers ····· D-17

I. ネジ ····· D-2
A.精密機器用小ネジ ····· D-3
B.ナベ小ネジ ····· D-3
E.バインド小ネジ ····· D-4
F.サラ小ネジ ····· D-5
G.タッピンネジ ····· D-6
H.バネ座金付き十字ナベ小ネジ ····· D-7
J.菊座付きねじ ····· D-7
K.TP小ネジ ····· D-8
L.六角穴付き止めネジおよび六角穴付きボルト ····· D-9
II. ナット ····· D-10
M.六角ナット ····· D-10
III. ワッシャ ····· D-11
N.S & T. 標準ワッシャ ····· D-12
U.平座金, バネ座金及び歯付き座金 ····· D-13
IV. 止め輪 ····· D-14
V.E形止め輪 ····· D-14
W.グリップ止め輪 ····· D-14
X.C形止め輪 ····· D-15
V. ピン ····· D-16
Y.スプリングピンおよび平行ピン ····· D-16
VI. スペーサ ····· D-17
Z.スペーサ ····· D-17

B01

COPYRIGHT©1996 CANON INC. CANON DR-3020 REV.0 MAR. 1996 PRINTED IN JAPAN (IMPRIME AU JAPON)

I. SCREWS
ネジ
How to read Part Numbers
部品番号の見方

Screws (except socket head cap screws)
ネジ（六角穴付ボルトを除く）

XB1-2400-609

Classification symbol 類別番号	·····	Binding head machine screw バインドネジ
Nominal diameter (d) 呼び径(d)	·····	M4.0
Length (ℓ) 長さ (ℓ)	·····	6.0mm
Material and surface treatment 材料および表面処理	·····	Steel (black zinc plated) see table 1. 鋼材（黒色亜鉛メッキ） 表1参照

Socket head cap screws
六角穴付きボルト

XB7-1080-409

Classification symbol 類別番号	·····	Binding head cap screw 六角穴付きボルト
Nominal diameter (d) 呼び径(d)	·····	M8
Length (ℓ) 長さ (ℓ)	·····	40mm
Materrial and surface treatment 材料および表面処理	·····	Steel (black zinc plated) see table 1. 鋼材（黒色亜鉛メッキ） 表1参照

Material and surface tratment

NO.	Material	Surfaceee treatment	Color
1	Material	Blackened	Black
2		Without surface treatment	White
3	Brass	Mickel plated	White
4		Black nickel plated	Black
5	Steel	Zinc plated	Yellow
6		Nickel and chrome plated	White
7		Nickel plated	White
8		Phosphated	Black
9		Black zinc plated	Black

Table 1

材料および表面処理

番号	材質	表 面 処 理	Color
1	ステンレス	黒着色	Black
2		なし	White
3	黄 銅	ニッケルメッキ	White
4		黒色ニッケルメッキ	Black
5	鋼	亜鉛メッキ	Yellow
6		ニッケルクロムメッキ	White
7		ニッケルメッキ	White
8		鉄鋼燐酸塩被膜	Black
9		黒色亜鉛メッキ	Black

表1

B02

COPYRIGHT©1996 CANON INC. CANON DR-3020 REV.0 MAR. 1996 PRINTED IN JAPAN (IMPRIME AU JAPON)

A. MACHINE SCREWS (FOR PRECISION USE)
精密機器用小ネジ

Pan head machine screws
ナベ小ネジ

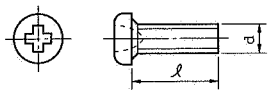

Flat head machine screws
サラ小ネジ

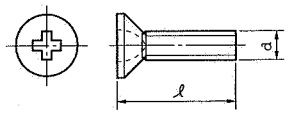

Key No.	Part Number
A05	XA4-1170-306
A10	XA4-4200-509
A11	XA4-4200-709
A21	XA1-1200-209
A22	XA1-1200-307
A26	XA1-1200-409
A27	XA1-1200-507
A28	XA1-1200-509
A30	XA1-1200-607
A33	XA1-1200-809
A40	XA1-1260-507
A47	XA1-1261-609

Key No.	Part Number
A61	XA1-6200-306
A62	XA1-6200-409
A65	XA1-6260-407
A66	XA1-7170-307
A67	XA1-7200-509

B. PAN HEAD MACHINE SCREWS
ナベ小ネジ

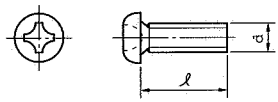

Key No.	Part Number
A82	XA1-3200-407
A83	XA1-3300-607
A85	XA1-3300-609

Key No.	Part Number
B10	XB1-1200-405
B17	XB1-1260-205
B18	XB1-1200-809
B19	XB1-1210-509
B20	XB1-1300-407
B21	XB1-1260-409
B23	XB1-1200-505
B25	XB1-1300-509
B26	XB1-1300-605
B27	XB1-1300-606
B28	XB1-1300-607
B29	XB1-1300-609

Key No.	Part Number
B32	XB1-1300-807
B33	XB1-1300-809
B34	XB1-1301-007
B36	XB1-1301-009
B39	XB1-1301-209
B42	XB1-1301-609
B43	XB1-1302-009
B44	XB1-1302-507
B51	XB1-1401-602
B53	XB1-1400-604
B54	XB1-1400-609
B56	XB1-1400-807

Key No.	Part Number
B57	XB1-1400-809
B58	XB1-1400-009
B60	XB1-1401-207
B61	XB1-1401-609
B62	XB1-1401-607
B63	XB1-1402-503
B64	XB1-1403-009
B81	XB1-1500-809
B82	XB1-1501-209

COPYRIGHT©1996 CANON INC. CANON DR-3020 REV.0 MAR. 1996 PRINTED IN JAPAN (IMPRIME AU JAPON)

E

E. BINDING HEAD MACHINE SCREWS
バインド小ネジ

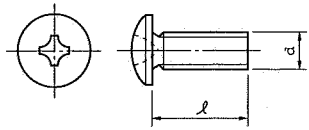

Key No.	Part Number	Key No.	Part Number	Key No.	Part Number
E00	XB1-2250-605	E36	XB1-2301-607	E72	XB1-2401-209
E01	XB1-2200-403	E37	XB1-2301-609	E73	XB1-2401-602
E02	XB1-2260-409	E38	XB1-2302-003	E74	XB1-2401-604
E03	XB1-2200-407	E39	XB1-2301-809	E75	XB1-2230-809
E04	XB1-2200-409	E40	XB1-2300-806	E76	XB1-2401-609
E05	XB1-2300-309	E41	XB1-2302-009	E77	XB1-2400-605
E06	XB1-2300-403	E42	XB1-2302-503	E78	XB1-2402-006
E07	XB1-2300-404	E43	XB1-2303-505	E79	XB1-2402-009
E08	XB1-2300-406	E44	XB1-2302-509	E80	XB1-2400-406
E09	XB1-2300-407	E45	XB1-2303-003	E81	XB1-2402-509
E10	XB1-2300-409	E46	XB1-2303-009	E82	XB1-2200-606
E11	XB1-2300-502	E47	XB1-2303-509	E83	XB1-2403-009
E12	XB1-2300-503	E48	XB1-2304-507	E84	XB1-2403-505
E13	XB1-2300-504	E49	XB1-2400-407	E85	XB1-2404-009
E14	XB1-2300-506	E50	XB1-2400-409	E86	XB1-2404-507
E15	XB1-2300-509	E51	XB1-2400-506	E87	XB1-2401-809
E16	XB1-2300-601	E52	XB1-2400-509	E88	XB1-2200-506
E17	XB1-2300-604	E53	XB1-2400-602	E89	XB1-2403-509
E18	XB1-2300-603	E54	XB1-2400-603	E90	XB1-2500-609
E19	XB1-2300-606	E55	XB1-2400-604	E91	XB1-2500-809
E20	XB1-2300-607	E56	XB1-2400-606	E92	XB1-2401-407
E21	XB1-2300-609	E57	XB1-2400-607	E93	XB1-2501-009
E22	XB1-2300-801	E58	XB1-2400-609	E94	XB1-2501-609
E23	XB1-2300-804	E59	XB1-2400-802	E95	XB1-2502-009
E24	XB1-2200-509	E60	XB1-2400-804	E96	XB1-2502-509
E25	XB1-2300-807	E61	XB1-2400-806	E97	XB1-2404-509
E26	XB1-2300-809	E62	XB1-2400-809	E98	XB1-2504-009
E27	XB1-2201-206	E63	XB1-2401-002	E99	XB1-2505-009
E28	XB1-2201-202	E64	XB1-2401-004	E100	XB1-2405-009
E29	XB1-2301-009	E65	XB1-2401-006	E101	XB1-2200-605
E30	XB1-2301-202	E66	XB1-2401-007	E102	XB1-2200-809
E31	XB1-2301-204	E67	XB1-2401-009		
E32	XB1-2301-209	E68	XB1-2401-203		
E33	XB1-2301-603	E69	XB1-2401-204		
E34	XB1-2301-604	E70	XB1-2401-206		
E35	XB1-2301-409	E71	XB1-2401-207		

B04

COPYRIGHT©1996 CANON INC. CANON DR-3020 REV.0 MAR. 1996 PRINTED IN JAPAN (IMPRIME AU JAPON)

F. FLAT HEAD MACHINE SCREWS
サラ小ネジ

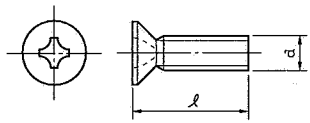

Key No.	Part Number	Key No.	Part Number
F15	XB1-3200-509	F31	XB1-3301-002
F16	XB1-3200-609	F32	XB1-3301-006
F17	XB1-3300-407	F33	XB1-3301-009
F19	XB1-3300-405	F34	XB1-3301-202
F20	XB1-3300-409	F35	XB1-3301-209
F21	XB1-3300-502	F36	XB1-3301-207
F22	XB1-3300-509	F39	XB1-3302-505
F23	XB1-3300-601	F40	XB1-3300-607
F24	XB1-3300-604	F62	XB1-3400-609
F25	XB1-3300-606	F64	XB1-3400-804
F26	XB1-3300-609	F65	XB1-3400-806
F27	XB1-3300-802	F66	XB1-3400-809
F28	XB1-3300-806	F67	XB1-3401-006
F29	XB1-3300-807	F68	XB1-3401-009
F30	XB1-3300-809	F69	XB1-3401-206
		F70	XB1-3402-005
		F71	XB1-3402-509

COPYRIGHT©1996 CANON INC. CANON DR-3020 REV.0 MAR. 1996 PRINTED IN JAPAN (IMPRIME AU JAPON)

G. SELF-TAPPING SCREWS
タッピンネジ

Pan head self-tapping screws
ナベタッピンネジ

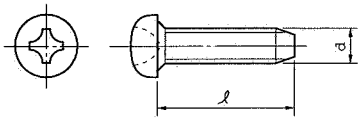

Key No.	Part Number	Key No.	Part Number
G01	XB4-6300-506	G20	XB4-6200-605
G02	XB4-6400-607	G21	XB3-1400-809
G10	XB3-1300-409	G22	XB4-6200-507
G11	XB3-1300-509	G23	XB4-6200-509
G12	XB3-1300-609	G24	XB4-6301-505
G13	XB3-1300-809		
G14	XB3-1301-009		

Binding head self-tapping screws
バインドタッピンネジ

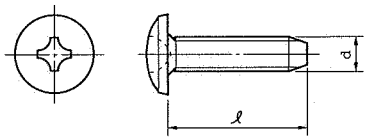

Key No.	Part Number	Key No.	Part Number
G03	XB4-7502-009	G36	XB4-8300-607
G04	XB4-7501-009	G37	XB4-6300-809
G05	XB4-7301-409	G38	XB4-7300-807
G06	XB4-7200-809	G39	XB4-7400-609
G07	XB4-7301-609	G40	XB4-7401-007
G08	XB4-7300-607	G41	XB3-2300-609
G09	XB4-7260-609	G42	XB3-2300-809
G15	XB4-7300-409	G43	XB3-2301-009
G16	XB4-7300-609	G44	XB3-2302-009
G17	XB4-7300-809	G45	XB4-6502-009
G18	XB4-7301-009	G46	XB4-7402-009
G19	XB4-7301-209	G49	XB4-7403-509
G25	XB4-7400-809	G50	XB4-7404-009
G26	XB4-7400-209	G51	XB3-2400-609
G27	XB4-7401-607	G52	XB3-2400-809
G28	XB4-7505-507	G53	XB3-2401-009
G29	XB4-7401-207	G54	XB3-2401-209
G30	XB4-7401-009	G55	XB3-2402-009
G31	XB3-2260-509	G61	XB5-2300-609
G32	XB4-7200-409	G65	XB5-2400-609
G33	XB4-7261-209	G67	XB5-2400-809
G34	XB4-7200-609	G69	XB5-2401-009
G35	XB4-7200-509	G70	XB4-6300-609

Flat head self-tapping screws
サラタッピンネジ

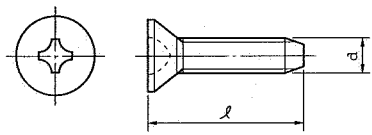

Key No.	Part Number
G71	XB3-3300-609
G72	XB3-3300-809
G81	XB3-3400-809
G82	XB3-3401-209
G97	XB4-8260-807

B06

COPYRIGHT©1996 CANON INC. CANON DR-3020 REV.0 MAR. 1996 PRINTED IN JAPAN (IMPRIME AU JAPON)

H. PAN HEAD MACHINE SCREWS
WITH CAPTIVE SPRING WASHER
バネ座金付き十字ナベ小ネジ

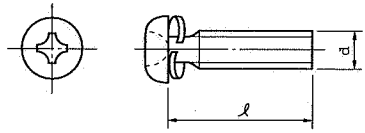

Key No.	Part Number	Key No.	Part Number
H41	XB6-6300-609	H64	XB6-6401-205
H42	XB6-6300-505	H65	XB6-6401-605
H43	XB6-6300-605	H66	XB6-6402-005
H44	XB6-6300-805	H81	XB6-6500-805
H45	XB6-6301-005	H82	XB6-6501-005
H46	XB6-6301-205	H83	XB6-6501-205
H47	XB6-6301-605	H85	XB6-6502-005
H48	XB6-6302-005		
H60	XB6-6400-607		
H61	XB6-6400-605		
H62	XB6-6400-805		
H63	XB6-6401-005		

J. PAN HEAD MACHINE SCREW
WITH TOOTHED WASHER
菊座付ねじ

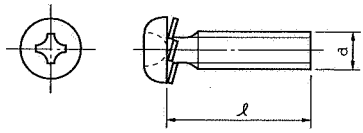

Key No.	Part Number
J01	XB2-3301-007
J02	XB2-4300-607
J03	XB2-4400-607
J04	XB2-4500-809
J05	XB2-6300-609
J06	XB2-6301-009
J07	XB2-7300-607
J08	XB2-7400-606
J09	XB2-7400-807
J10	XB2-8300-607
J11	XB2-8300-807
J12	XB2-8301-007
J13	XB2-8400-607

COPYRIGHT©1996 CANON INC. CANON DR-3020 REV.0 MAR. 1996 PRINTED IN JAPAN (IMPRIME AU JAPON)

K

K. WASHER HEAD MACHINE SCREWS
TP小ネジ

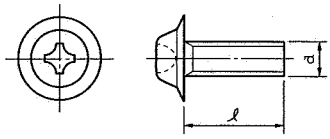

Key No.	Part Number	Key No.	Part Number
K01	XB6-7200-509	K54	XB6-7303-009
K02	XB6-7201-009	K60	XB6-7400-405
K20	XB6-7260-409	K61	XB6-7400-409
K21	XB6-7260-509	K62	XB6-7400-509
K22	XB6-7260-609	K63	XB6-7400-609
K36	XB6-7300-309	K64	XB6-7400-809
K37	XB6-7300-405	K65	XB6-7401-009
K38	XB6-7300-509	K66	XB6-7401-209
K39	XB6-7300-605	K67	XB6-7401-609
K40	XB6-7300-305	K68	XB6-7402-009
K41	XB6-7300-409	K69	XB6-7402-509
K42	XB6-7300-509	K70	XB6-7400-605
K43	XB6-7300-609	K81	XB6-7500-609
K44	XB6-7300-809	K82	XB6-7500-809
K45	XB6-7301-009	K83	XB6-7501-009
K46	XB6-7301-209	K84	XB6-7501-609
K47	XB6-7301-609	K85	XB6-7502-009
K48	XB6-7302-009		
K49	XB6-7302-509		
K50	XB6-7300-407		
K51	XB6-7300-607		
K52	XB6-7300-805		
K53	XB6-7301-409		

B08

COPYRIGHT©1996 CANON INC. CANON DR-3020 REV.0 MAR. 1996 PRINTED IN JAPAN (IMPRIME AU JAPON)

L. HEX SOCKET SETSCREWS AND SOCKET HEAD CAP SCREWS
六角穴付き止めネジおよび六角穴付きボルト

Hex socdet set screws
六角穴付き止めネジ

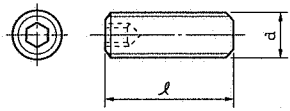

Key No.	Part Number	Key No.	Part Number
L01	XB6-1400-608	L14	XB6-2500-508
L02	XB6-2300-408	L15	XB6-2301-009
L03	XB6-2300-508	L16	XB6-2500-808
L04	XB6-2300-608	L17	XB6-2401-209
L05	XB6-2300-309	L18	XB6-2300-808
L06	XB6-2300-609	L19	XB6-1301-008
L07	XB6-2400-408	L20	XB6-1300-308
L08	XB6-2400-508	L23	XB6-2601-008
L09	XB6-2400-608	L25	XB6-1300-409
L10	XB6-2400-808	L26	XB6-1300-608
L11	XB6-2401-008	L29	XB6-1400-609
L12	XB6-2301-008	L30	XB6-1400-809
L13	XB6-2301-408	L31	XB6-1401-208

Socket head cap screws
六角穴付きボルト

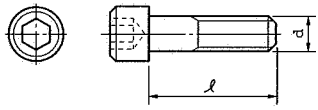

Key No.	Part Number	Key No.	Part Number
L51	XB7-1030-049	L68	XB7-1040-259
L52	XB7-1030-069	L69	XB7-1040-149
L53	XB7-1030-089	L70	XB7-1050-106
L54	XB7-1030-109	L71	XB7-1050-089
L55	XB7-1030-129	L72	XB7-1050-109
L56	XB7-1030-169	L73	XB7-1050-129
L57	XB7-1030-209	L74	XB7-1050-169
L58	XB7-1030-259	L75	XB7-1050-209
L59	XB7-1030-609	L76	XB7-1050-069
L61	XB7-1040-066	L77	XB7-1050-309
L62	XB7-1040-069	L80	XB7-1060-089
L63	XB7-1040-089	L81	XB7-1060-109
L64	XB7-1040-109	L82	XB7-1060-129
L65	XB7-1040-129	L83	XB7-1060-169
L66	XB7-1040-169	L84	XB7-1060-166
L67	XB7-1040-209	L86	XB7-1060-309
		L92	XB7-1080-169
		L93	XB7-1082-509
		L95	XB7-1100-209

COPYRIGHT©1996 CANON INC. CANON DR-3020 REV.0 MAR. 1996 PRINTED IN JAPAN (IMPRIME AU JAPON)

M

11. NUTS
ナット
M. HEXAGON NUTS
六角ナット

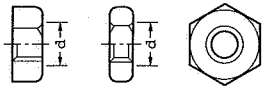

How to Part Numbers
部品番号の見方

XB7-2100-309

Hexason nut
六角ナット

Nominal diameter (d) ····· M4.0
呼び径(d)

Material and surface treatment ····· Steel (black zinc plated) see table 1.
材料および表面処理 鋼材（黒色亜鉛メッキ）

XB7-210····· Class 1
1種
XB7-220····· Class 3
3種

Key No.	Part Number	Key No.	Part Number
M01	XB7-2100-209	M50	XB7-2200-305
M02	XB7-2100-305	M53	XB7-2200-309
M03	XB7-2100-309	M54	XB7-2200-409
M04	XB7-2100-409	M55	XB7-2200-509
M05	XB7-2100-509	M57	XB7-2200-809
M06	XB7-2100-609	M58	XB7-2201-009
M07	XB7-2100-809		
M08	XB7-2100-505		
M09	XB7-2100-405		
M11	XB7-2101-009		

B10

COPYRIGHT©1996 CANON INC. CANON DR-3020 REV.0 MAR. 1996 PRINTED IN JAPAN (IMPRIME AU JAPON)

III. WASHERS AND SHIM WASHERS
ワッシャ
N. S & T. SHIM WASHERS
標準ワッシャ

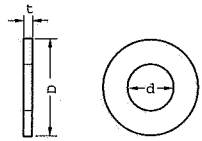

How to Part Numbers
部品番号の見方

XB7-2100-309

Hexason nut
六角ナット

Inner diameter (d) ····· 2.6mm
内径(d)

Outer kiameter (D) ····· Class 2
外径 (D) (See table 2)
2種
(表2参照)

Thickness code ····· 0.5mm
板厚番号 see table 3
表3参照

* Material : Brass
材料 : 黄銅

d (mm)	D (mm)		
	Class 1 1 種	Class 2 2 種	Class 3 3 種
1.5	—	2.6	3.2
1.8	2.7	3.1	3.7
2.1	3.2	3.6	4.2
2.3	3.6	4.0	4.6
2.6	4.0	4.4	5.0
3.1	4.6	5.0	5.6
3.6	5.4	5.8	6.4
4.1	5.7	6.6	8.0
4.6	6.4	7.4	9.0
5.2	7.2	8.2	10.0
5.7	7.8	9.0	11.0
6.2	8.5	9.8	12.0
6.7	9.2	10.5	13.0
7.2	10.0	11.4	14.0
7.7	10.6	12.2	15.0
8.2	11.4	13.0	16.0
8.7	12.0	13.8	17.0
9.2	12.8	14.6	18.0
9.7	13.5	15.4	19.0

Table 2 表2

Thickness code 板厚番号	t (mm)
0	0.05
1	0.1
2	0.2
3	0.3
4	0.4
5	0.5
6	0.6
7	0.7
8	0.8
9	1

Table 3 表3

COPYRIGHT©1996 CANON INC. CANON DR-3020 REV.0 MAR. 1996 PRINTED IN JAPAN (IMPRIME AU JAPON)

Key No.	Part Number
N02	XD1-1100-228
N11	XD1-1102-112
N15	XD1-1102-121
N38	XD1-1103-119
N40	XD1-1103-121
N41	XD1-1103-122
N42	XD1-1103-123
N43	XD1-1103-124
N44	XD1-1103-125
N45	XD1-1103-129
N48	XD1-1103-131
N49	XD1-1103-132
N50	XD1-1103-133
N52	XD1-1103-135
N57	XD1-1103-139
N58	XD1-1103-137
N62	XD1-1103-625
N65	XD1-1103-629
N66	XD1-1103-634
N74	XD1-1103-639
N75	XD1-1104-111
N76	XD1-1104-112
N77	XD1-1104-113
N79	XD1-1104-115
N80	XD1-1104-121
N82	XD1-1104-123
N84	XD1-1104-125
N88	XD1-1104-129
N91	XD1-1104-133
N92	XD1-1104-135
N93	XD1-1104-136
N94	XD1-1104-139
N95	XD1-1104-615
N96	XD1-1104-632
N97	XD1-1104-137

Key No.	Part Number
S06	XD1-1105-219
S07	XD1-1105-212
S08	XD1-1105-215
S09	XD1-1105-218
S10	XD1-1105-221
S15	XD1-1105-228
S16	XD1-1105-230
S17	XD1-1105-231
S18	XD1-1105-232
S20	XD1-1105-234
S21	XD1-1105-235
S22	XD1-1105-236
S23	XD1-1105-237
S45	XD1-1105-738
S49	XD1-1106-213
S50	XD1-1106-211
S51	XD1-1106-215
S52	XD1-1106-216
S53	XD1-1106-218
S55	XD1-1106-219
S56	XD1-1106-220
S57	XD1-1106-221
S58	XD1-1106-222
S59	XD1-1106-223
S61	XD1-1106-225
S64	XD1-1106-228
S65	XD1-1106-229
S67	XD1-1106-231
S68	XD1-1106-232
S69	XD1-1106-233
S70	XD1-1106-234
S71	XD1-1106-235
S75	XD1-1106-239
S88	XD1-1106-728
S92	XD1-1106-732
S95	XD1-1106-735
S99	XD1-1106-739

Key No.	Part Number
T14	XD1-1107-224
T15	XD1-1107-225
T18	XD1-1107-228
T22	XD1-1107-232
T23	XD1-1107-233
T25	XD1-1107-235
T53	XD1-1108-213
T55	XD1-1108-215
T56	XD1-1108-216
T59	XD1-1108-219
T61	XD1-1108-221
T62	XD1-1108-222
T63	XD1-1108-223
T65	XD1-1108-225
T68	XD1-1108-228
T69	XD1-1108-229
T71	XD1-1108-231
T72	XD1-1108-232
T73	XD1-1108-233
T75	XD1-1108-235
T76	XD1-1108-236
T79	XD1-1108-239
T88	XD1-1109-235
T90	XD1-1109-239
T95	XD1-1110-225

COPYRIGHT©1996 CANON INC. CANON DR-3020 REV.0 MAR. 1996 PRINTED IN JAPAN (IMPRIME AU JAPON)

U. PLAIN WASHERS, SPRING WASHERS &TOOTHED LOCK WASHERS
平座金、バネ座金および歯付き座金

Plain washers
平座金

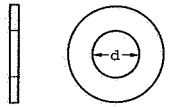

How to Part Numbers
部品番号の見方

XD1-2100-307

Plain washer 片座金

- Inner diameter (d) ····· 3.0mm 呼び径(d)
- Material and surface treatment ····· Steel (nickel plated) 鋼材（ニッケルメッキ） 材料および表面処理

Key No.	Part Number	Key No.	Part Number
U01	XD1-2100-207	U05	XD1-2100-507
U02	XD1-2100-305	U06	XD1-2100-607
U03	XD1-2100-307	U07	XD1-2100-807
U04	XD1-2100-407	U08	XD1-2100-007

Spring washers
バネ座金

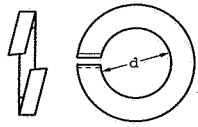

How to Part Numbers
部品番号の見方

XD1-3100-507

Spring washer バネ座金

- Inner diameter (d) ····· 5.0mm 呼び径(d)
- Material and surface treatment ····· Steel (nickel plated) 鋼材（ニッケルメッキ） 材料および表面処理

Key No.	Part Number	Key No.	Part Number
U51	XD1-3100-207	U56	XD1-3100-607
U52	XD1-3100-305	U57	XD1-3100-807
U53	XD1-3100-307	U58	XD1-3100-309
U54	XD1-3100-407	U59	XD1-3100-409
U55	XD1-3100-507	U61	XD1-3101-007

Toothed lock washers
歯付き座金

Inner toothed type内歯形

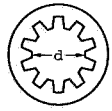

Over toothed type外歯形

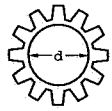

How to Part Numbers
部品番号の見方

XD1-4100-302

Toothel lock washer 歯付き座金

- Inner diameter (d) ····· 3.0mm 呼び径(d)
- Materrial and surface treatment ····· Steel (without surface treatment) ステンレス（表面処理なし） 材料および表面処理

XD1-410 ····· Inner toothed type 内歯形
XD1-420 ····· Outer toothed type 外歯形

Key No.	Part Number	Key No.	Part Number
U81	XD1-4100-202	U91	XD1-4200-302
U83	XD1-4100-302	U92	XD1-4200-402
U84	XD1-4100-402	U93	XD1-4200-502
U85	XD1-4100-502	U94	XD1-4200-602
U86	XD1-4100-602	U95	XD1-4200-802
U87	XD1-4100-802		

COPYRIGHT©1996 CANON INC. CANON DR-3020 REV.0 MAR. 1996 PRINTED IN JAPAN (IMPRIME AU JAPON)

IV. RETAINING RINGS
止め輪

V. E RINGS
E形止め輪

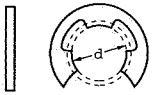

How to Part Numbers
部品番号の見方

XD2-1100-172

- XD2: E ring / E形止め輪
- 1100: Inner diameter (d) ····· 1.7mm / 呼び径(d)
- 172: Material and surface treatment ····· Steel (nickel plated) / 材料および表面処理 鋼材（ニッケルメッキ）

XD2-110 ····· Class 1 / 1種
XD2-120 ····· Class 2 / 2種

2 ·····Stainless (without surface treatment) / ステンレス（表面処理なし）
7 ·····Steel (nickel plated) / 鋼材（ニッケルメッキ）

Key No.	Part Number
V03	XD2-1100-132
V04	XD2-1100-172
V05	XD2-1100-202
V06	XD2-1100-242
V07	XD2-1100-282
V08	XD2-1100-322
V09	XD2-1100-372
V10	XD2-1100-402
V11	XD2-1100-422
V12	XD2-1100-502
V13	XD2-1100-582
V14	XD2-1100-602
V15	XD2-1100-642
V16	XD2-1100-742
V17	XD2-1100-802

Key No.	Part Number
V54	XD2-1200-202
V55	XD2-1200-407
V56	XD2-1200-302
V57	XD2-1200-402
V58	XD2-1200-502
V59	XD2-1200-642
V60	XD2-1200-322
V61	XD2-1200-802
V62	XD2-1200-902
V70	XD2-1200-907

W. GRIP RINGS
グリップ止め輪

How to Part Numbers
部品番号の見方

XD2-2100-502

- XD2: Grip ring / グリップ止め輪
- 2100: Inner diameter (d) ····· 5.0mm / 呼び径(d)
- 502: Material and surface treatment ····· Stainless (without surface treatment) / 材料および表面処理 ステンレス（表面処理なし）

Key No.	Part Number
W01	XD2-2100-202
W03	XD2-2100-302
W05	XD2-2100-402
W07	XD2-2100-502
W08	XD2-2100-602
W10	XD2-2100-802
W11	XD2-2100-902
W12	XD2-2100-002

COPYRIGHT©1996 CANON INC. CANON DR-3020 REV.0 MAR. 1996 PRINTED IN JAPAN (IMPRIME AU JAPON)

X. C RINGS
C形止め輪

External type
軸用

Shaft
軸

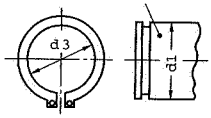

Internal type
穴用

Hole
穴

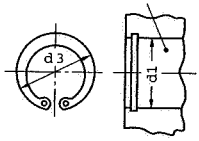

How to Part Numbers
部品番号の見方

XD2-3100-202

C ring
C形止め輪

Nominal diameter (d1)····· 2.0mm
呼び径(d1)

Material and surface treatment
材料および表面処理

XD2-310 ····· External type
軸用

XD2-320 ····· Internal type
穴用

2 Stainless (without surface treatment)
ステンレス（表面処理なし）

8 Steel (phosphated)
鋼材（鉄鋼燐酸塩被膜）

Exlernal type
軸用

Nominal diameter 呼び径	d1 (mm)	d3 (mm)
010	10	9.3
012	12	11.1
014	14	12.9
015	15	13.8
016	16	14.7
017	17	15.7
018	18	16.5
020	20	18.5
022	22	20.5
025	25	23.2
028	28	25.9
030	30	27.9
032	32	29.6
035	35	32.2

Exlernal type
軸用

Nominal diameter 呼び径	d1 (mm)	d3 (mm)	Nominal diameter 呼び径	d1 (mm)	d3 (mm)
010	10	10.7	040	40	43.5
011	11	11.8	042	42	45.5
012	12	13.0	045	45	48.5
014	14	15.1	047	47	50.5
016	16	17.3	050	50	54.2
018	18	19.5	052	52	56.2
019	19	20.5	055	55	59.2
020	20	21.5	060	60	64.2
022	22	23.5	062	62	66.2
025	25	26.9	068	68	72.5
028	28	30.1	072	72	76.5
030	30	32.1	075	75	79.5
032	32	34.4	080	80	85.5
035	35	37.8	085	85	90.5
037	37	39.8	090	90	95.5
			095	95	100.5

Key No.	Part Number
X01	XD2-3100-102
X03	XD2-3100-122
X06	XD2-3100-148
X07	XD2-3100-152
X10	XD2-3100-168
X11	XD2-3100-172
X13	XD2-3100-182
X15	XD2-3100-202
X16	XD2-3100-208
X18	XD2-3100-228
X20	XD2-3100-258
X24	XD2-3100-308

Key No.	Part Number
X39	XD2-3200-162
X47	XD2-3200-222
X48	XD2-3200-228
X50	XD2-3200-258
X52	XD2-3200-288
X53	XD2-3200-302
X56	XD2-3200-328

Key No.	Part Number
X60	XD2-3200-378
X63	XD2-3200-422
X64	XD2-3200-428
X74	XD2-3200-558
X75	XD2-3200-602
X79	XD2-3200-682
X80	XD2-3200-688

C01

COPYRIGHT©1996 CANON INC. CANON DR-3020 REV.0 MAR. 1996 PRINTED IN JAPAN (IMPRIME AU JAPON)

V. PINS
ピン
Y. SPRING AND DOWEL PINS
スプリングピンおよび平行ピン

Spring pins
スプリングピン

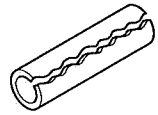

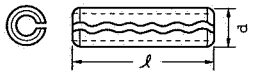

How to Part Numbers
部品番号の見方

XD3-1200-122

- Spring pin / スプリング
- Nominal deameter (D)····· 2.0mm / 呼び径(D)
- Lensth (ℓ) ····· 12mm / 長さ (ℓ)
- Material and surface treatment ····· Stainless (without surface treatment) / 材料および表面処理 / ステンレス（表面処理なし）

Key No.	Part Number	Key No.	Part Number
Y04	XD3-1120-102	Y33	XD3-1250-162
Y14	XD3-1160-122	Y42	XD3-1300-082
Y15	XD3-1160-142	Y43	XD3-1300-102
Y21	XD3-1200-052	Y44	XD3-1300-122
Y22	XD3-1200-062	Y45	XD3-1300-142
Y23	XD3-1200-082	Y46	XD3-1300-162
Y24	XD3-1200-102	Y47	XD3-1300-202
Y25	XD3-1200-122	Y49	XD3-1300-322
Y26	XD3-1200-142	Y50	XD3-1300-182
Y27	XD3-1200-162	Y51	XD3-1400-082
Y28	XD3-1200-182		
Y29	XD3-1200-202		

Dowel pins
平行ピン

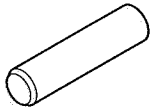

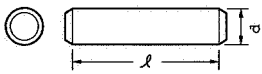

How to Part Numbers
部品番号の見方

XD3-2200-082

- Down pin / 平行ピン
- Nominal deameter (D)····· 2.0mm / 呼び径(D)
- Lensth (ℓ) ····· 8.0mm / 長さ (ℓ)
- Material and surface treatment ····· Stainless (without surface treatment) / 材料および表面処理 / ステンレス（表面処理なし）

Key No.	Part Number	Key No.	Part Number	Key No.	Part Number
Y60	XD3-2120-102	Y74	XD3-2200-142	Y83	XD3-2300-182
Y61	XD3-2100-102	Y75	XD3-2200-162	Y84	XD3-2300-202
Y66	XD3-2160-122	Y76	XD3-2200-182	Y85	XD3-2300-222
Y67	XD3-2160-062	Y77	XD3-2300-082	Y86	XD3-2300-102
Y68	XD3-2160-082	Y79	XD3-2300-122	Y87	XD3-2400-222
Y69	XD3-2160-102	Y80	XD3-2200-252	Y88	XD3-2400-322
Y70	XD3-2200-062	Y81	XD3-2300-142	Y95	XD3-4100-052
Y71	XD3-2200-082	Y82	XD3-2300-162	Y97	XD3-4300-082
Y72	XD3-2200-102				
Y73	XD3-2200-122				

C02

COPYRIGHT©1996 CANON INC. CANON DR-3020 REV.0 MAR. 1996 PRINTED IN JAPAN (IMPRIME AU JAPON)

VI. SPACERS
スペーサ
Z. SPACERS
スペーサ

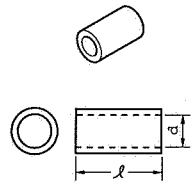

How to Part Numbers
部品番号の見方

XZ1-1300-305

Spacer
スペーサ

- Nominal deameter (D)····· 3.0mm
  呼び径(D)
- Lensth (ℓ) ····· 3.0mm
  長さ (ℓ)
- Material and surface treatment ····· Steel (zinc plated)
  材料および表面処理 鋼（亜鉛メッキ）

Key No.	Part Number
Z20	XZ1-1300-205
Z21	XZ1-1300-305
Z22	XZ1-1300-405
Z23	XZ1-1300-505
Z24	XZ1-1300-605
Z25	XZ1-1300-705
Z26	XZ1-1300-805
Z27	XZ1-1301-005
Z28	XZ1-1301-905
Z29	XZ1-1301-205
Z30	XZ1-1301-605
Z31	XZ1-1301-805
Z32	XZ1-1301-405
Z33	XZ1-1300-905

Key No.	Part Number
Z41	XZ1-1400-205
Z42	XZ1-1400-305
Z43	XZ1-1400-405
Z44	XZ1-1400-505
Z45	XZ1-1400-605
Z46	XZ1-1400-705
Z47	XZ1-1400-805
Z48	XZ1-1400-905
Z49	XZ1-1401-005
Z51	XZ1-1401-205
Z52	XZ1-1401-605
Z53	XZ1-1401-805
Z54	XZ1-1402-505

Key No.	Part Number
Z59	XZ1-1500-405
Z60	XZ1-1500-505
Z63	XZ1-1501-205
Z63	XZ1-1501-205
Z64	XZ1-1501-605
Z70	XZ1-1600-505
Z71	XZ1-1600-805
Z75	XZ1-1800-405
Z79	XZ1-1801-105
Z80	XZ1-1801-205
Z81	XZ1-1804-005

COPYRIGHT©1996 CANON INC. CANON DR-3020 REV.0 MAR. 1996 PRINTED IN JAPAN (IMPRIME AU JAPON)

〒146
東京都大田区下丸子３－３０－２
キ ヤ ノ ン 株 式 会 社
映像事務機品質保証センター
映 像 事 務 機 Ｔ Ｓ 推 進 部
映像事務機ＴＳ推進２課
1996年 3月 第1版発行

Prepared by
OFFICE IMAGING PRODUCTS TECHNICAL SUPPORT DEPT.2
OFFICE IMAGING PRODUCTS TECHNICAL SUPPORT DIV.
OFFICE IMAGING PRODUCTS QUALITY ASSURANCE CENTER
CANON INC.
Printed in Japan
FIRST EDITION (MAR. 1996)

30-2, Shimomaruko 3-Chome, Ohta-ku, Tokyo 146, Japan

D01

COPYRIGHT©1996 CANON INC. CANON DR-3020 REV.0 MAR. 1996 PRINTED IN JAPAN (IMPRIME AU JAPON)

Canon

この印刷物は古紙を70%含んだ紙を使用しています。
This publication is printed on 70% reprocessed paper.

D02

PRINTED IN JAPAN (IMPRIME AU JAPON)

0396TG.100-0

Canon SERVICE BULLETIN MICRO

Issued by Canon Europa N.V.

MODEL: ED500

No. : GEN-080

Date : 24.04.98

SUBJECT : TECHNICAL INFORMATION ON ED500

1. OUTLINE

This is to inform Technical Information of new product, ED500.

This ED500 is the equipment with endorsement function of checks and others and this equipment can be installed to DR-3020. Also, this ED500 is available for CD-4046 which will be on sale.

2. INDEX

- Product number----------P1
- Product structure----------P1
- Features----------P2
- Specifications----------P3 to 4
- Names of parts----------P5
- Installation / preparation------P6 to 7
- Operation / Function----------P8 to 12
- Disassemble / Assemble----------P13 to 16
- Adjustment of Stamping Assembly-- P17
- Maintenance / Servicing----------P18
- Circuit Diagram----------P19 to 20
- Parts Catalog----------P21 to 33

3. PRODUCT NUMBER

- M18-0541-000 (100V, 50/60Hz)
- M18-0543-000 (120V, 60Hz)
- M18-0544-000 (230V, 50/60Hz)

*External Figure of ED500

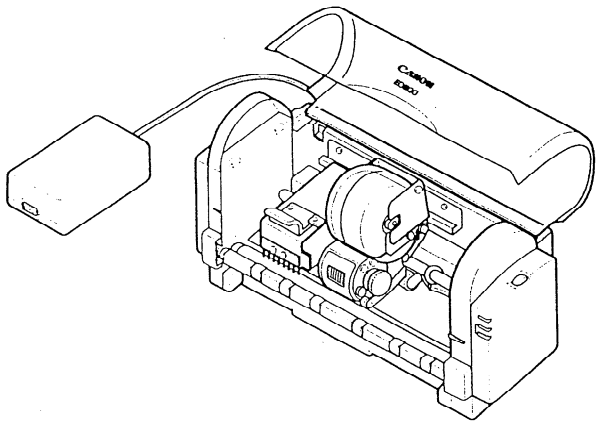

4. PRODUCT STRUCTURE

1) Main body and Power supply unit
2) Power Supply Cord
3) Receptacle adapter (only for 100V)
4) Ground cable (only for 100V)
5) Diedrum B110
6) Screw(for diedrum)
7) Delivery Tray E
8) User's Instructions
9) Guarantee Certificate (only for 100V)

5. FEATURES

1) Easy installation

Installation can be completed only by placing the ED500 Main body onto the Delivery Assembly of DR-3020 and CD-4046 (hereinafter, called as "Scanner"). No connections by cables with Scanner and ED500 has its specified power supply.

2) Pre ink replenishment (Pre-paint) function

Though our previous endorsers may not be able to stamp the first document, since ink can not be put on the stamp at the initial operation, ED500 has the function of pre ink replenishment. (hereinafter, called as "Pre-paint") It needs manual operation.

3) Movable stamping position

Change the horizontal direction of stamping position by moving the Stamping Assembly horizontally. Change the vertical direction by the stamping position adjusting dial of Operation Panel.

4) Lower noise

Since operation noise of ED500 is lower than previous endorsers, it is suitable for using in the office.

Product life : 1 million document scanning or 5 years, whichever comes first.

Note : This ED500 can work with DR-3020 and CD-4046, but not with DR-3020N, because DR- 3020N is basically used for non carbon pressure sensitive paper.

6. SPECIFICATIONS

1) Type
Installed onto Scanner

2) Endorsing method
Stamping type

3) Available document size
•Width : 130 to 257 mm
•Length : 70 to 297 mm
•Thickness : 0.08 to 0.2 mm

4) Stamping position
•Horizontal direction : Move Stamping Assembly manually to the right and left. The adjustable range is 31mm max. left and 92mm max. right from the center of the document feeding path. Adjust it not as to be dislocated from the document.
•Vertical direction : Rotate the Stamping position adjusting dial. The adjustable range are two mode as follows. To switch modes is subjected to the service technician.
a) Check mode (Default)
The center of the date is 24 to 69 mm from the front edge of the document.
b) A4 / Letter mode
The center of the date is 26 to 271 mm from the front edge of the document.
These are reference value which maybe different depending on any conditions.
Printing assurance range is 28 to 65 mm in Check mode, and 31 to 266 mm in A4/ Letter mode.
Adjust it as to have 5mm or more distance between the end of stamping and the front or rear edge of document.

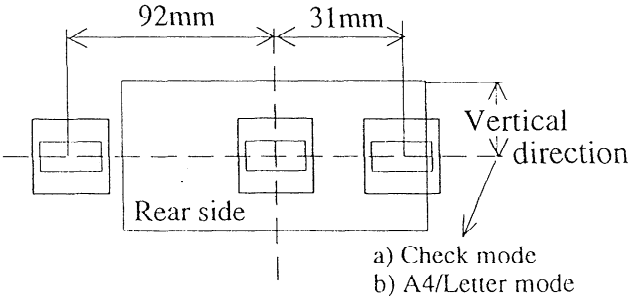

5) Area of the Stamping plate (Outside max.)
30(W) x 40(L) mm

6) Feeding speed
ED500 can exchange its speed by 3 steps automatically, depending on the document delivery speed from Scanner.
a) High speed : 241.9 mm/sec.
b) Medium speed : 181.4 mm/sec.
c) Low speed : 121.0 mm/sec.

7) Operation noise
Acoustic pressure level : Less than 70dB

8) Functions
•Pre-paint : Yes
•Jams detection : Yes
•Stamping counter : No
•Correspond function sheet : No
•External Interface : No

9) Dimension
•Main Body :
340(W) x 154(D) x 184(H) mm
•Power Supply Unit :
85(W) x 146(D) x 68(H) mm

10) Weight
•Main Body : 3.0 kg
•Power Supply Unit : 1.3 kg

11) Consumption power or input current max.
•100V machine : 30W
•120V machine : 0.3A
•230V machine : 0.2A

12) Certified Standard

Country/Area	Safety Std.	EMC Std.
Japan		VCCI ClassA
USA	UL1950	FCC ClassA
Canada	CSA950	IC ClassA
Europe	IEC950	CISPR ClassB
	CE Marking	
North Europe	*Note	
Australia	*Note	C-tick Marking

*Note : Now on application

13) Consumables

- Ink Roller : Estimation of exchange is 0.3 million feeding

a) Ink Roller 32(Red) : MG1-1432

b) Ink Roller 33(Black) : MG1-1433

c) Ink Roller 34(Blue) : MG1-1434

d) Ink Roller 35(Purple) : MG1-1435

Specifications are subject to change due to improvement of product, etc.

7. NAMES OF PARTS

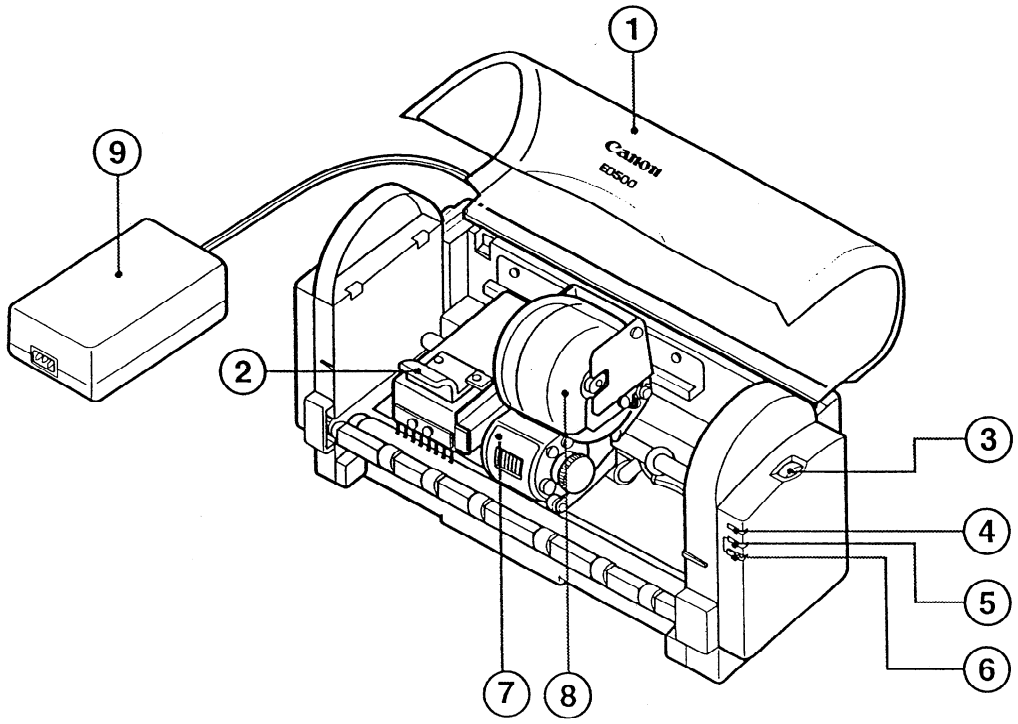

① Upper cover
② Release lever
③ Stamping position adjustment dial
④ Power supply lamp
⑤ Stamping lamp
⑥ Stamping switch
⑦ Diedrum
⑧ Ink roller (sold separately)
⑨ Power supply unit

8. INSTALLATION / PREPARATION

ED500 can be installed by users. Refer to User's Instructions. Basic procedure and special notes are described here.

1) Unpacking

a) Unpack and take out the main body, power supply unit and other enclosed parts. The main body and power supply unit are connected with the cable.

b) Peal whole filament tapes for fixing several positions of the main body.

c) Open the upper cover and remove all of 3 cushions for protecting stamping assembly.

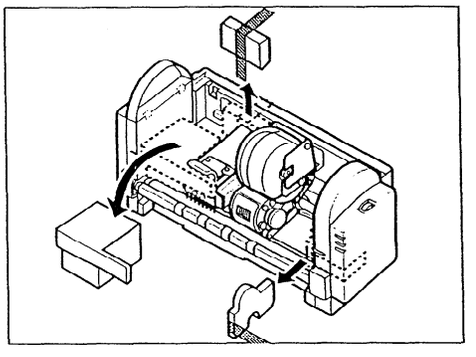

2) Place to Scanner

a) Let the delivery guide tray of Scanner stand up vertically and remove it so as push the center of lower side from the rear side to the front.

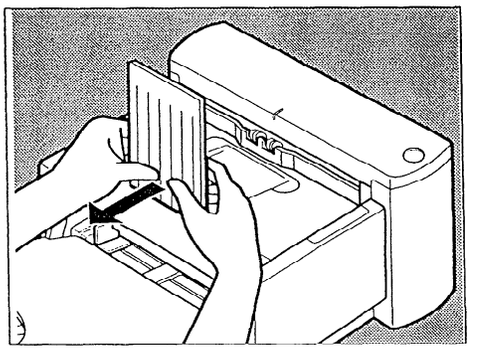

b) Hold the right and left of the main body and lift the rear side up a little by hands, and set ED500 so that 2 hooks on rear side can be set securely to the delivery slot of Scanner.

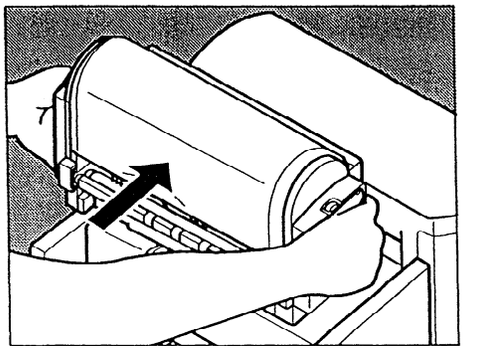

c) Attach the enclosed delivery guide tray E.

3) Attach Diedrum

a) Apply the proper stamping plate for the user to enclosed diedrum.

b) Lift the Stamping assembly and insert diedrum to the diedrum shaft until the spring at the edge enters into the slot of diedrum shaft. Then, attach the enclosed screw.

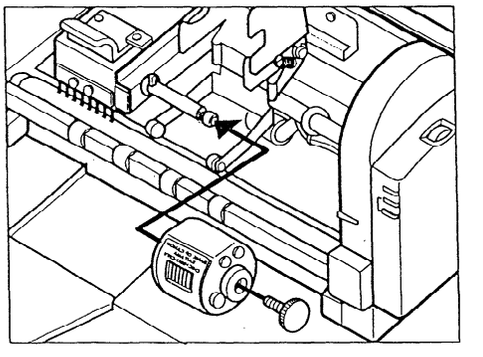

c) Set the date which user requests. Be careful that the stamping plate shall not be damaged.

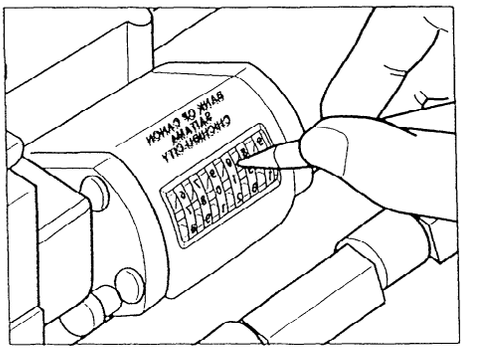

d) Attach Ink roller which is sold separately.

4) Connect Power supply cord

a) Connect power supply cord to power supply assembly of the main body.

b) If that is 100V machine and its power receptacle has 2 holes, use receptacle adapter and connect ground wire. If its power receptacle has 3 holes with ground, the adapter is unnecessary.

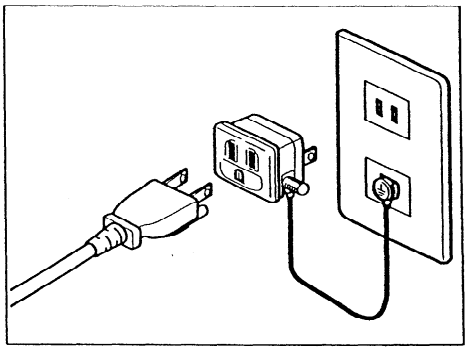

c) Turn on the power supply of Scanner.

5) Stamping test

Before stamping on the actual document, confirm stamping quality and position by using other paper. For operation method, refer to other item.

9. OPERATION / FUNCTION

1) Basic operation

Basic operation is as follows.

For installation procedure and preparation, refer to another item. And, for details, refer to User's Instructions.

a) Put on the power of the Scanner, a power lamp of ED500 will be lighten green.

b) Push the stamping switch to turn on stamping. The stamping lamp will be lighten yellow-green.

*For description of the condition of stamping lamp, refer to Note1.

c) Remove ink roller and set the date of diedrum.

d) Adjust stamping position.

*For details of adjusting method, refer to Note 2.

e) When it is the first using or it is not used for a long time, perform pre-paint.

*For pre-paint, refer to Note 3.

f) Set documents.

g) Start feeding of the document.

*For feeding and printing method, refer to User's Instructions of the Scanner or software.

Note 1 : Description of stamping lamp

- •Yellow-green ---Stamping ON
- •Orange ----------Stamping OFF
- •Red----------Document jam
- •Yellow-green (flashing)--- Disposition of stamping
- •Red (flashing)---Defected Diedrum or DC Power Supply
- •Not lighten---Power Supply of Scanner is OFF or the machine can not be supplied from Power Supply

Note 2 : Adjusting of stamping position

a) Horizontal direction

Lift the release lever and move the stamping assembly to the right and the left. Adjust it not as to be dislocated from the document.

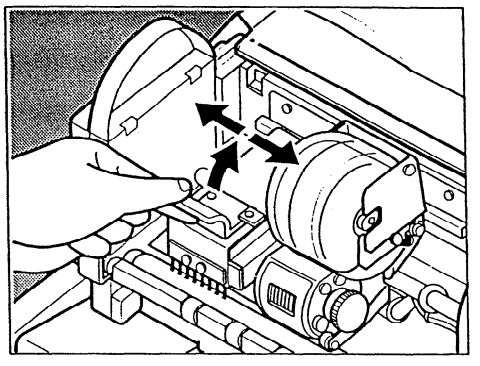

b) Vertical direction

•With referring to the following estimation, adjust the required position with rotating the stamping position adjustment dial.

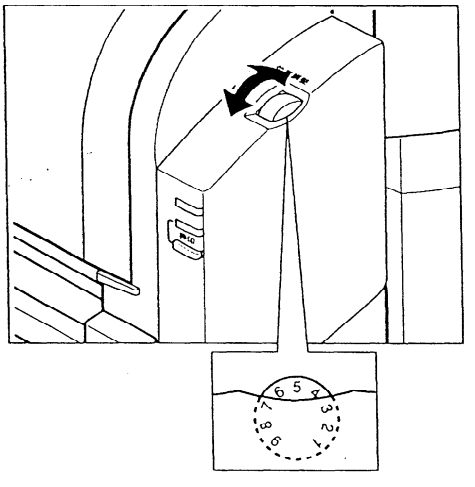

•The following table indicates scales of the dial and the estimated distance from the front edge of document to the center of date.

Unit : mm

Scales of the dial	1	3	5	7	9
Check mode	24	33	48	62	69
A4/Letter mode	26	69	147	225	271

These are reference value which maybe different depending on any conditions. Adjust it as to have 5mm or more distance between the end of stamping and the front or rear edge of document.

•Selection of Check or A4/Letter mode can be made with the Dip switch(SW2) on prepaint CPU PCB. For A4/Letter mode, move No.3 to ON (upper) side. Be careful that the change of setting should be done after pulling out the power supply cord. Setting is recognized at the turning on the power of ED500.

Setting of SW2

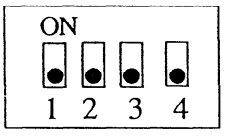

Check mode (Default)

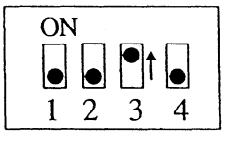

A4/Letter mode

Note 3 : Procedure of Pre-paint

a) While keeping lifting the release lever, turn-on stamping switch. Until finishing pre-paint, keep lifting the release lever.

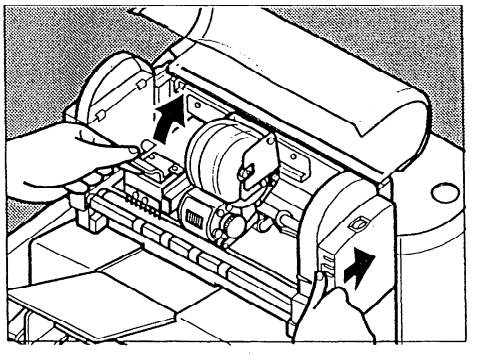

b) Diedrum is rotated a half and it is replenished with ink.

c) Release the release lever.

2) Special operations

The followings are descriptions of counter-measures if the stamping lamp indicates any error, and the special mode.

*If the endorser lamp is lighten red;

Document jam is occurred. Take jammed document away carefully so that document may not be broken.

a) Lift the rear side of main body up a little, release the hook from Scanner and move main body to the front.

b) Take jammed document away from delivery assembly and/or pick-up assembly of ED500.

c) If a document is jammed in Scanner, open the feeder assembly of Scanner and take it away. For operation method, refer to User's Instructions of Scanner.

d) Set ED500 to Scanner.

e) ED500 is reset automatically. Even if diedrum moves to the home position, it shall not be defected.

*If the stamping lamp is flashing yellow-green;

Vertical stamping position is over the rear edge of document and the stamping position shall be re-adjusted.

a) After finishing feeding of document and stopping the Feeding Motor, push the stamping switch.

b) The stamping lamp returns to be lighten yellow-green again.

c) Rotate the stamping position adjustment dial depending on the document length and adjust it on the correct position.

*If the stamping lamp is flashing red;

Home position of diedrum or DC output from power supply unit maybe defected.

a) Pull out power supply cord and insert it again. Even if it is not reset, the following countermeasure shall be done.

b) If the lamp is flashing red, after document was jammed and motion of diedrum was defected, check electrical and mechanical connections from stamping motor to home position sensor. If any defects are found, repair it and insert power cord again.

c) If no defects are found out about die drum, measure pressure of AC power supply. If it is not defected, measure DC output voltage of power supply unit. The specified DC voltage is +24V. If DC voltage is abnormal, replace power supply unit.

d) If such defects as above are not found, prepaint CPU PCB shall be replaced.

*Set Dip switch

With changing the setting of Dip switch (SW2) on prepaint CPU PCB, special operation modes can be available. However, "No.4" shall be always OFF, since its mode is not set.

Except for the switching for stamping range mode, any other modes may not be used in the field. While power supply cord should be pulled out, change the setting. Setting is recognized at the turning on the power of ED500.

a) Setting mode at shipment from the factory (Default) is all switches are on OFF (lower side).

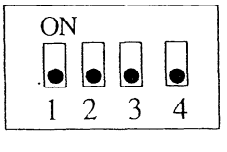

b) Endurance mode

If "No.1" switch is ON, endurance mode is set. It shall always be OFF in the field.

c) Disregard Scanner mode

If "No.2" switch is ON, disregard Scanner mode is set. It shall always be OFF in the field.

d) Switching for stamping range mode

When "No.3" switch is ON, the stamping range mode for vertical direction is available for A4/Letter mode. For range of stamping position, refer to another description.

*Temporary changing of stamping range mode

If changing stamping range mode during power-on, perform the following operation. This temporary method is not for User.

The setting mode will be invalid when pulling out power supply cord, and when connecting the cord again, the mode will become the setting mode of No.3 of Dip switch (SW2).

a) Check mode

While keeping lifting release lever and continuing to push the stamping switch, rotate the stamping position adjustment dial from "9" to "1".

b) A4/Letter mode

While keeping lifting release lever and continuing to push the stamping switch, rotate the stamping position adjustment dial from "1" to "9".

c) When recognized the switching mode, diedrum rotates a little same as detect the home position.

3) Block diagram

The followings are the basic block diagram, the driving block diagram and the electric circuit block diagram of ED500.

ED500 is constructed by main body and power supply unit. And the main body is constructed by Stamping assembly, Feeding assembly and Control assembly.

ED500 has two(2) driving motors, M1 is for feeding and M2 is for diedrum

Program built-in CPU is mounted onto Prepaint CPU PCB. This CPU PCB is connected with driving motor, sensor and other electric parts.

Power is supplied through power supply PCB which is in power supply unit to the main body. AC power input is transferred to DC24V by power supply PCB. DC5V is converted from DC24V internal of the main body.

•Basic block diagram

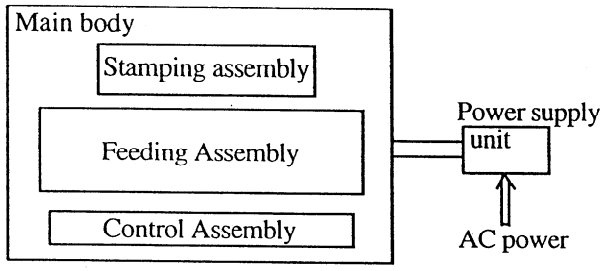

•Driving block diagram

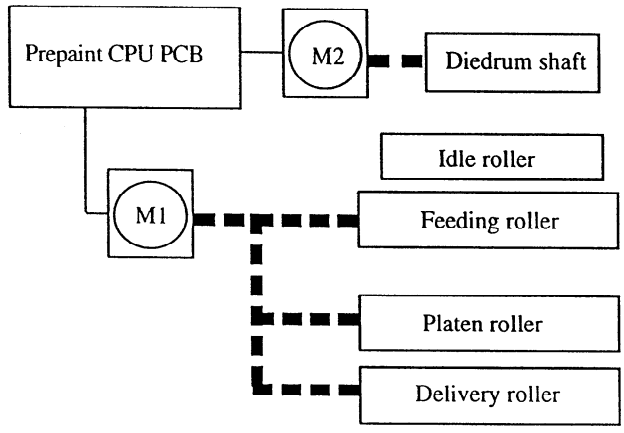

•Electric circuit block diagram

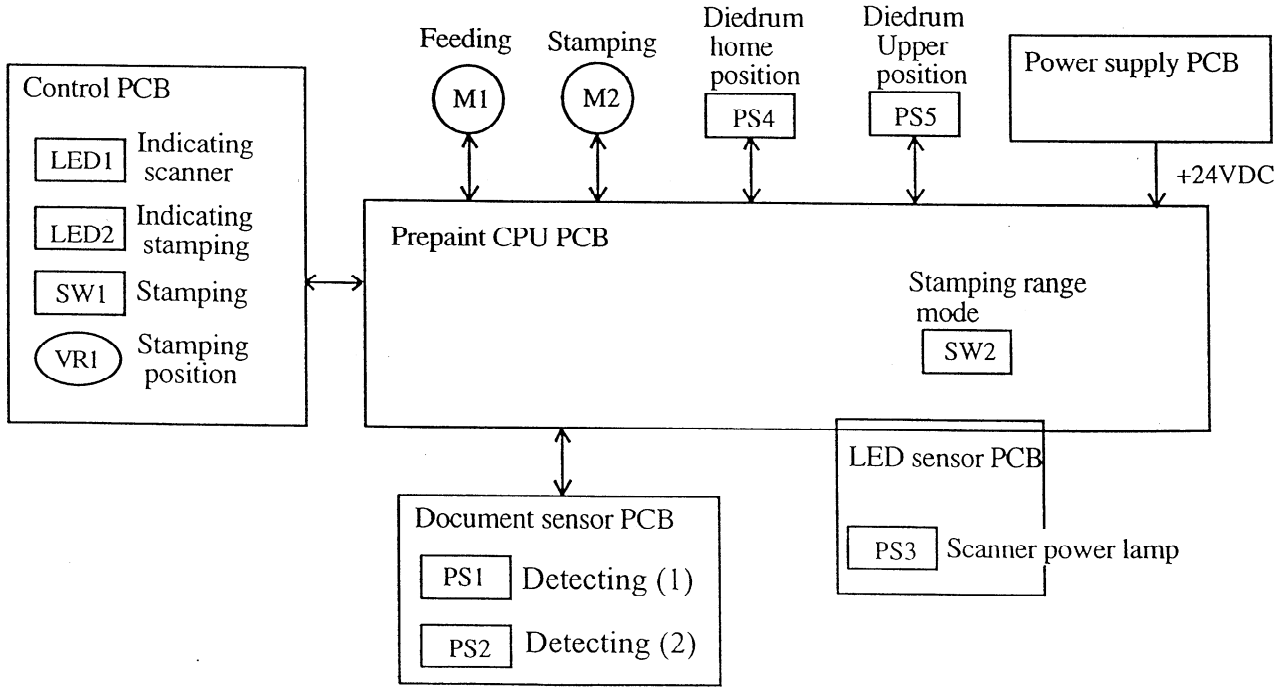

4) Control of stamping operation

Timing chart of electric signals when stamping on one document is shown as follows.

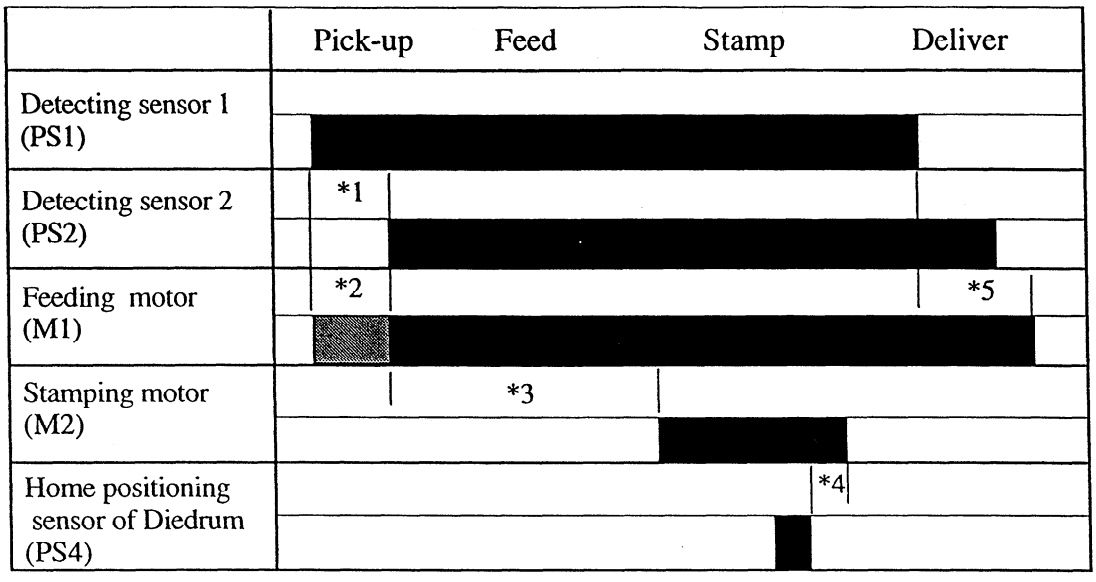

*1: Measure the time of document reaching from PS1 to PS2 and judge feeding speed of Scanner.
*2: Until judging feeding speed of Scanner, feeding motor is driving by the same speed as one measured before. After judging, the motor is driving by the measured speed.
*3: Waiting time until the stamping motor starts driving is decided by the setting of the stamping position adjustment dial.
*4: After the specified time has passed since Diedrum returns to the home position, stamping motor stops.
*5: After the specified time has passed since the document passed through PS1, feeding motor stops.
Note1: Time value and scale of each signal are different from the actual ones.
Note2: Signals of PS1 and PS2 are actually active low signals.

If the machine judges that stamping position in vertical direction may be over document, the stamping lamp will be flashing yellow-green. This judge is decided by comparing the signal of document detecting sensor and waiting time until the stamping motor starts driving. On this occasion, stamping is not operated.

If the machine judges document jam, the stamping lamp will be lightening red. There are 2 kinds of document jams; One is pick-up jam when sensor 2 (PS2) does not detect even if the specified time has passed since document detecting sensor 1 (PS1) detected the document, and another is sequestration jam when sensor 1 (PS1) continues to detect more than the maximum length 297mm (setting value is 309mm) since the sensor detected the edge of document. On this occasion, Feeding motor is stopped.

If the machine judges the defected rotation of diedrum, the stamping lamp will be flashing red. This is the occasion when home positioning sensor (PS4) can not detect the cutting edge of encoder plate mounted on die drum shaft, even if driving pulse is supplied to stamping motor. On this occasion, each operation will be stopped.

If DC power voltage (+24V)supplied from power supply unit is abnormal, also the stamping lamp will be flashing red.

10. DISASSEMBLE / ASSEMBLE

Procedure of disassemble and carefulness at assemble are described as follows. Unless otherwise specified, assemble shall be done according to the reverse of disassemble.

For disassembles of parts and units which are not specified in this item, refer to another item, Parts Catalog.

On disassemble and assemble, pull out the power supple plug. And, prior to disassemble and assemble, remove ink roller and diedrum.

Note : The machine shown in the following photo is the mass-production trial machine and it might be partially different from the actual mass production machine.

1) Rear cover

a) Take 2 screws away.

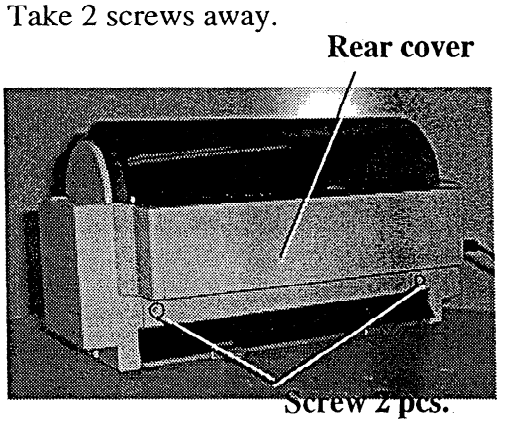

b) Open a half of the upper cover, take 2 hooks away and remove rear cover.

Note : If not opening a half of the upper cover, hooks can not be removed. And, if opening the cover fully, hooks can also not be removed,

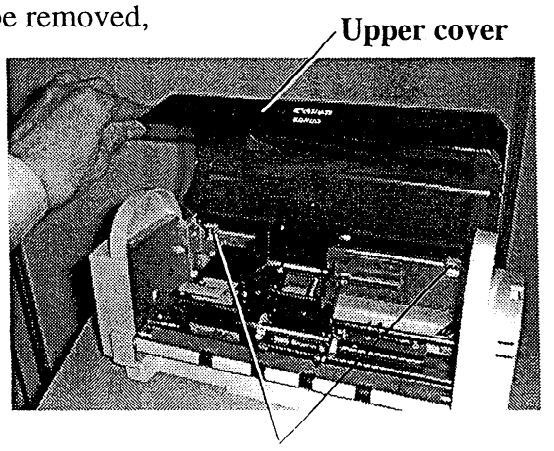

2) Right cover (Right cover assembly)

a) Remove rear cover.

b) Take 2 screws away.

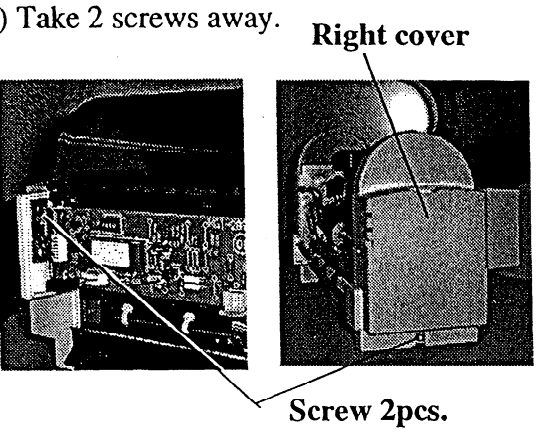

c) With removing 3 hooks, remove right cover assembly.

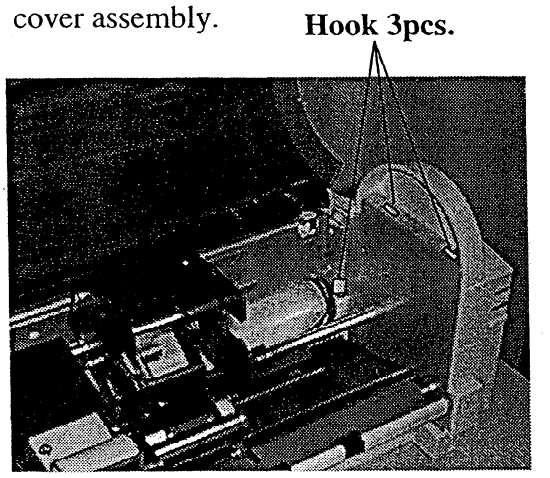

d) Remove 2 screws (black, self-tap) and take the control PCB and key top of stamping switch away from right cover.

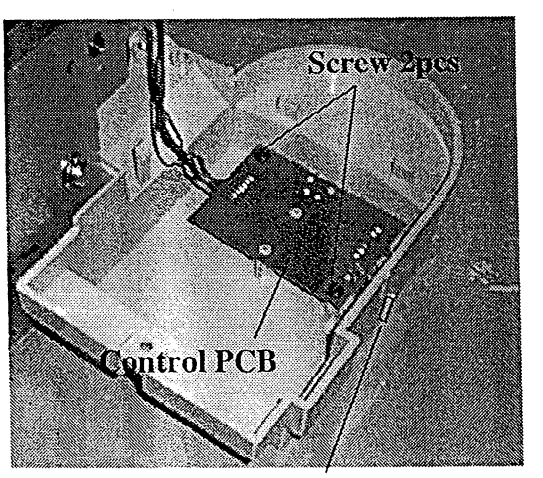

3) Left cover (Left cover assembly)

a) Remove rear cover.

b) Take 2 screws away.

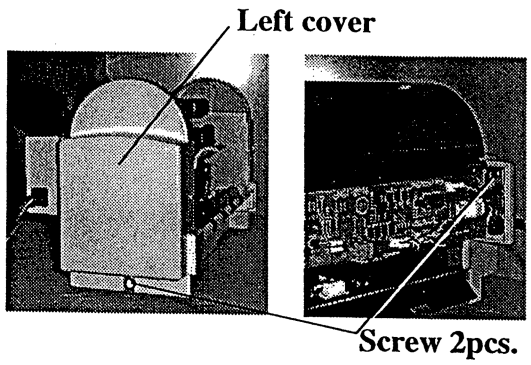

c) With removing 3 hooks, remove left cover assembly.

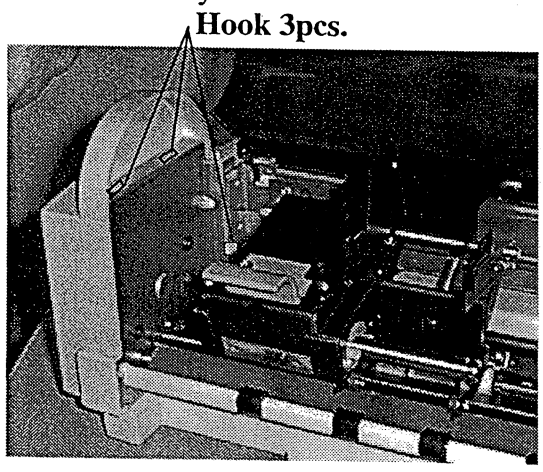

d) Remove the connector (J107) on prepaint CPU PCB for power supply unit.

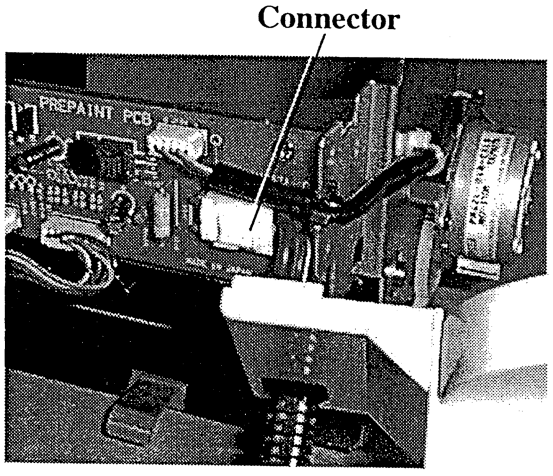

e) While keeping pushing the lock of bushing, remove the bushing and pull the connector out from left cover.

Note : If the connector is hanged at the hole of left cover when pulling the connector out, pull it while pressing the lock of the connector.

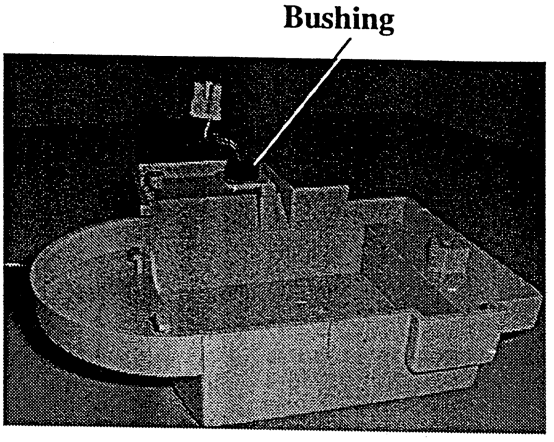

4) Upper cover

a) Remove rear cover.

b) Remove right cover assembly or left cover assembly.

c) Remove upper cover.

5) Delivery roller guide plate

a) Remove rear cover.

b) Remove right cover assembly.

c) Remove left cover assembly.

d) Take away 4 screws (2 of them are black TP) on the bottom side of the main body and remove the discharger.

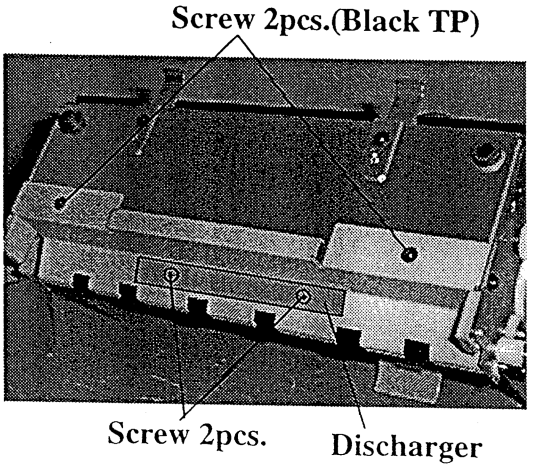

e) Take away hooks of right and left cover plates and remove cover plate.

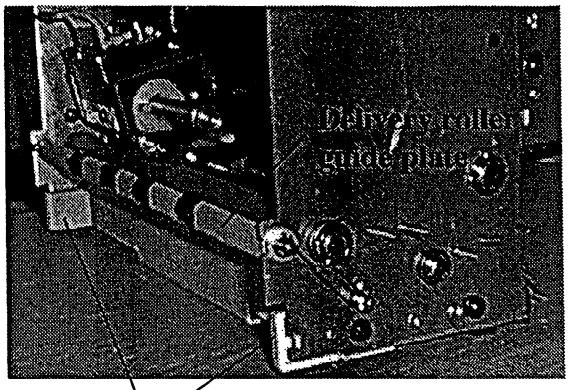

f) Remove delivery roller guide plate.

6) Stamping Assembly

a) Remove rear cover.

b) Remove right cover assembly.

c) Remove left cover assembly.

d) Pull out 2 connectors (J102/J105) on prepaint CPU PCB and take away 3 E-rings of the guide shaft.

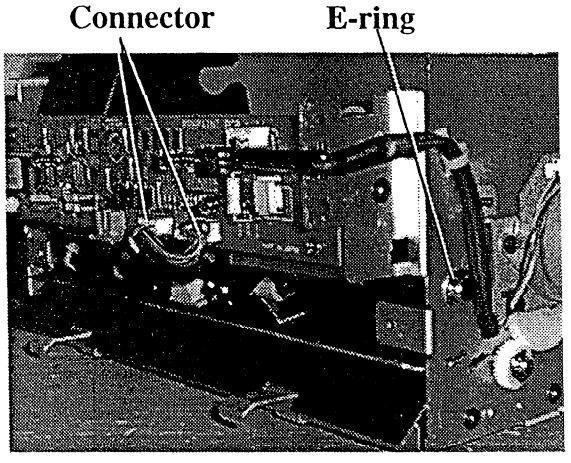

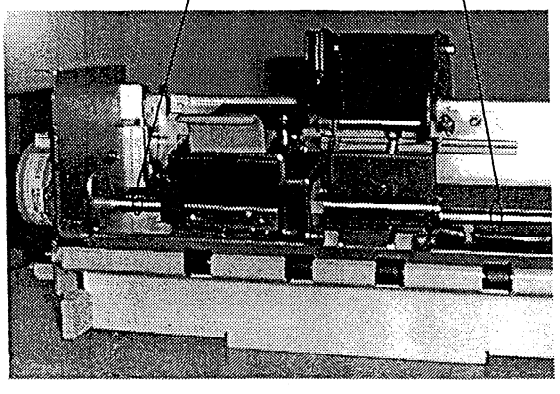

e) Pull away the guide shaft and remove stamping assembly from guide rail.

Note: Be careful not to be damaged the platen roller.

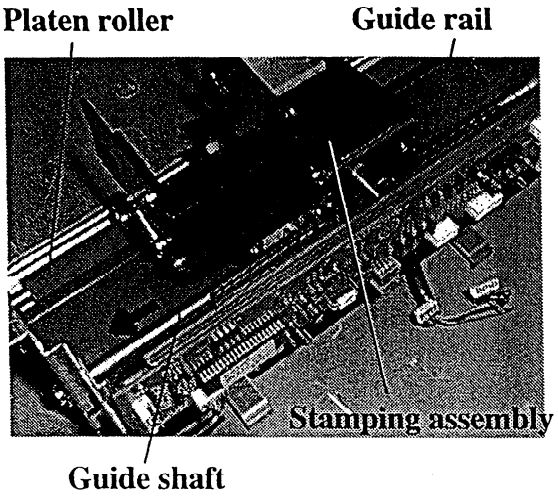

7) Right side plate

a) Remove rear cover.

b) Remove right cover assembly.

c) Remove left cover assembly.

d) Remove stamping assembly.

e) Remove delivery roller guide plate.

f) Take away total 3 E-rings of each roller shaft.

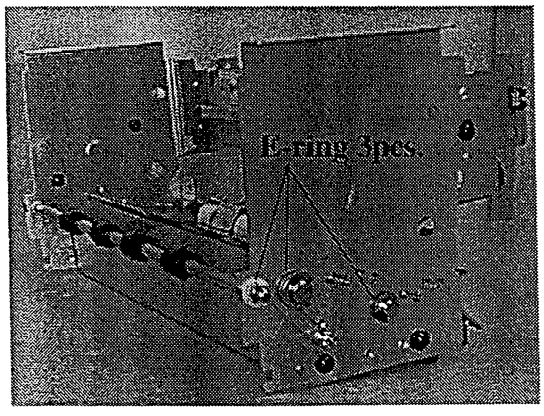

g) Take away bearings and spacer.

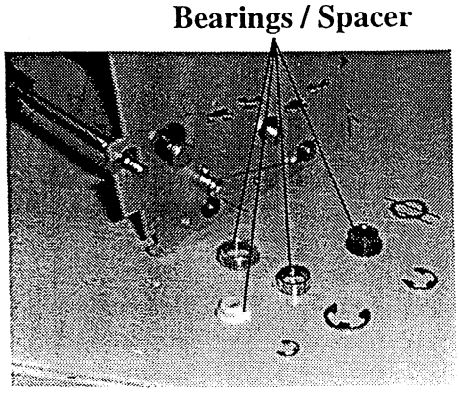

h) Take away 3 screws (black TP) and remove the right side plate.

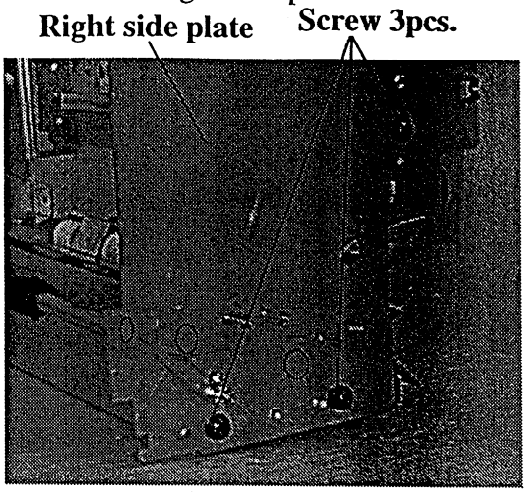

Note: Carefulness when assembling ;

1) Be careful many interlocked positions.
2) It is easy to keep the clearance to insert some folding papers into the clearance between upper and lower feeding guide plates.
3) The following method is easy to be assembled; Insert the positioning of feeding guide plate and feeding roller (driving) into the hole of right side plate and tighten right side plate a littel by screws, and then, insert platen roller and delivery roller.
4) Adjust base plate and rear stay positioning boss to the hole of right side plate and insert them.
5) Be careful not to be damaged the roller surface.

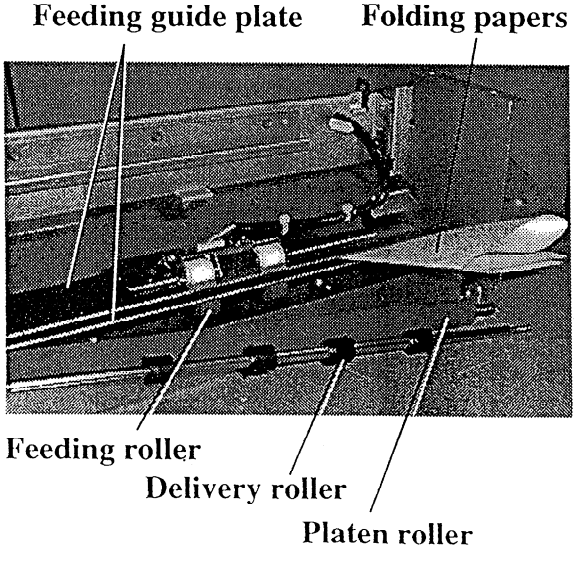

8) Upper cover of power supply

a) Take away 3 screws of the base plate of power supply unit and remove upper cover of power supply.

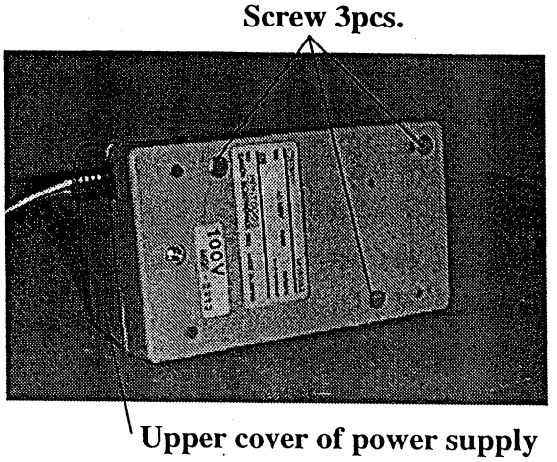

9) DC power supply cable

a) Remove rear cover.
b) Remove left cover.
c) Remove upper cover of power supply.
d) Take away one screw.

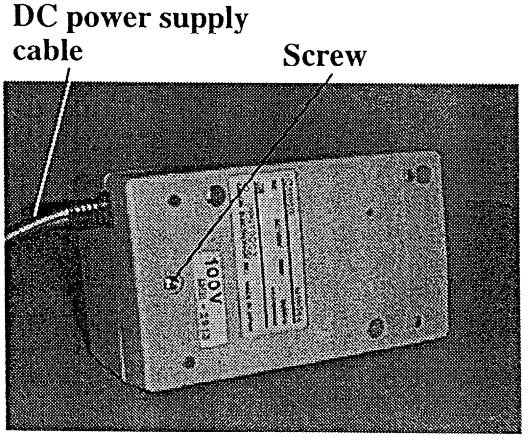

e) Move power supply PCB a little, pull out connector (J403) and remove DC power supply cable.

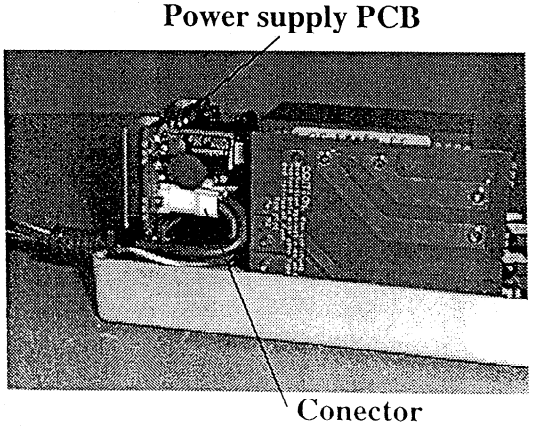

11. ADJUSTMENT OF STAMPING ASSEMBLY

If the defected density or damaged characters are occurred on the stamping results, position of ink roller or diedrum shall be adjusted. It had been adjusted at shipping from the factory, but, there may be such occasions necessary for adjustment as after replacing parts, etc.

And, if the dislocation of diedrum increases the load of the stamping motor, makes noise loud or makes document jam easy to be happened, it is necessary to be adjusted.

At first, check ink roller and diedrum (including the stamping plate), and then, if they are not defected, adjust the position of the ink roller. And if it is not efficient, diedrum shall be adjusted its position.

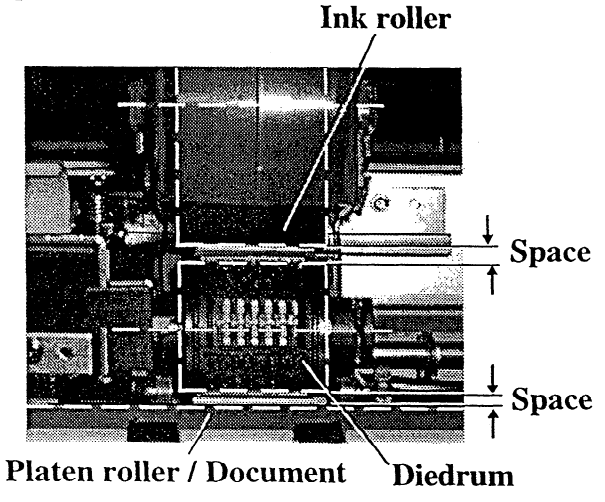

1) Adjustment of the position of Ink roller;

The space between ink roller and diedrum can be adjusted by rotating the screws as shown in the following photo, ink roller will be up and down.

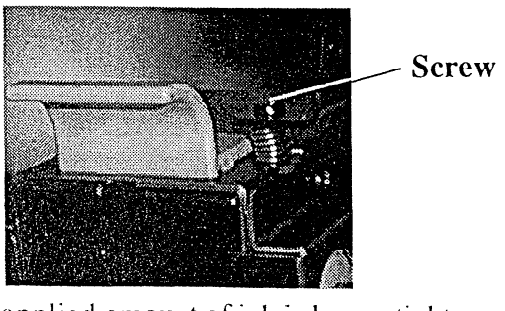

a) If applied amount of ink is lesser, tighten the screw in and narrow the space.

b) If applied amount of ink is more, loosen the screw and widen the space.

Note : On above occasion, ink amount of ink roller itself shall be proper.

2) Adjustment of the position of diedrum;

The space between Die drum and stamping surface can be adjusted, by changing the position of stopper plate tighten with the screws which is rear side of stamping assembly. Make a marking on the location before moving the stopper plate.

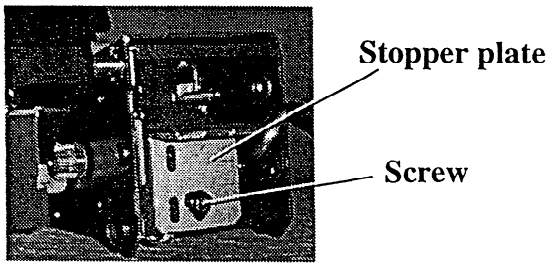

a) If the stamped characters are too thin, lower the stopper plate and the space will be narrow.

b) If the stamped characters are broaden and broken, lift the stopper plate and the space will be wide.

c) If the space is narrow too much, increases the load of the stamping motor, makes noise loud or makes document jam easy to be happened. The space shall be widened to the proper width which is not effected on the stamping result.

Note : If the flatness of stamping plate is not good, thin stamping might be occurred partially. Use the stamping plate with stable height and also be careful to be attached.

12. MAINTENANCE / SERVICING

1) Periodical service

The following positions shall be cleaned at the periodical service. Maintenance interval is approx. 250,000 sheets. As ED500 does not have a counter, refer to a counter of Scanner. Since the maintenance interval of Scanner is 250,000 sheets, the maintenance of ED500 will be better to be performed at the same time as Scanner.

a) Cleaning positions are as follows;

- •Idle roller (for feeding)
- •Platen roller
- •Diedrum

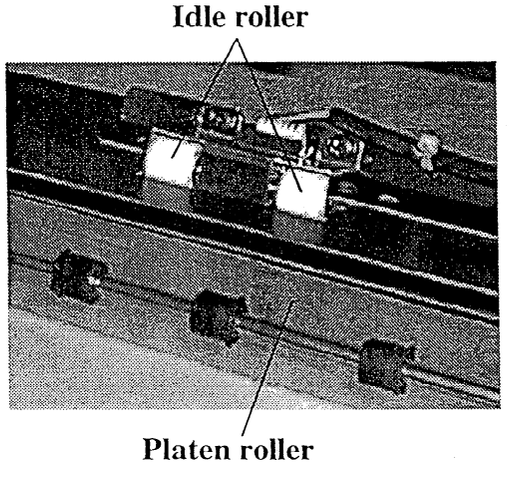

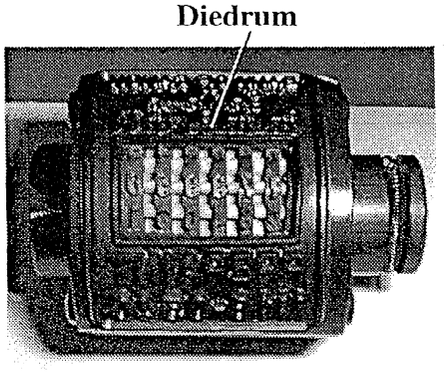

b) Idle roller

- •After wiping by a cloth soaked with water, wipe by a dry cloth.
- •To rotate the idle roller, the platen roller shall be rotated by fingers.

c) Platen roller

- •After wiping by a cloth soaked with water, wipe by a dry cloth.

d) Diedrum

- •Clean the date and stamping plate with soft brush. Be careful not to damage it.

e) If there are any other dirty portions with ink, wipe it by a cloth soaked with water, and then,wipe by dry cloth, preventing documents from dirty.

2) Daily maintenance by users

Instruct and request users to clean covers and diedrum at periodically.

And also, if the idle roller or the platen roller is dirt by ink, ask users to clean it by the same cleaning method as the periodical service.

13. CIRCUIT DIAGRAM

1) General circuit diagram

GENERAL CIRCUIT DIAGRAM

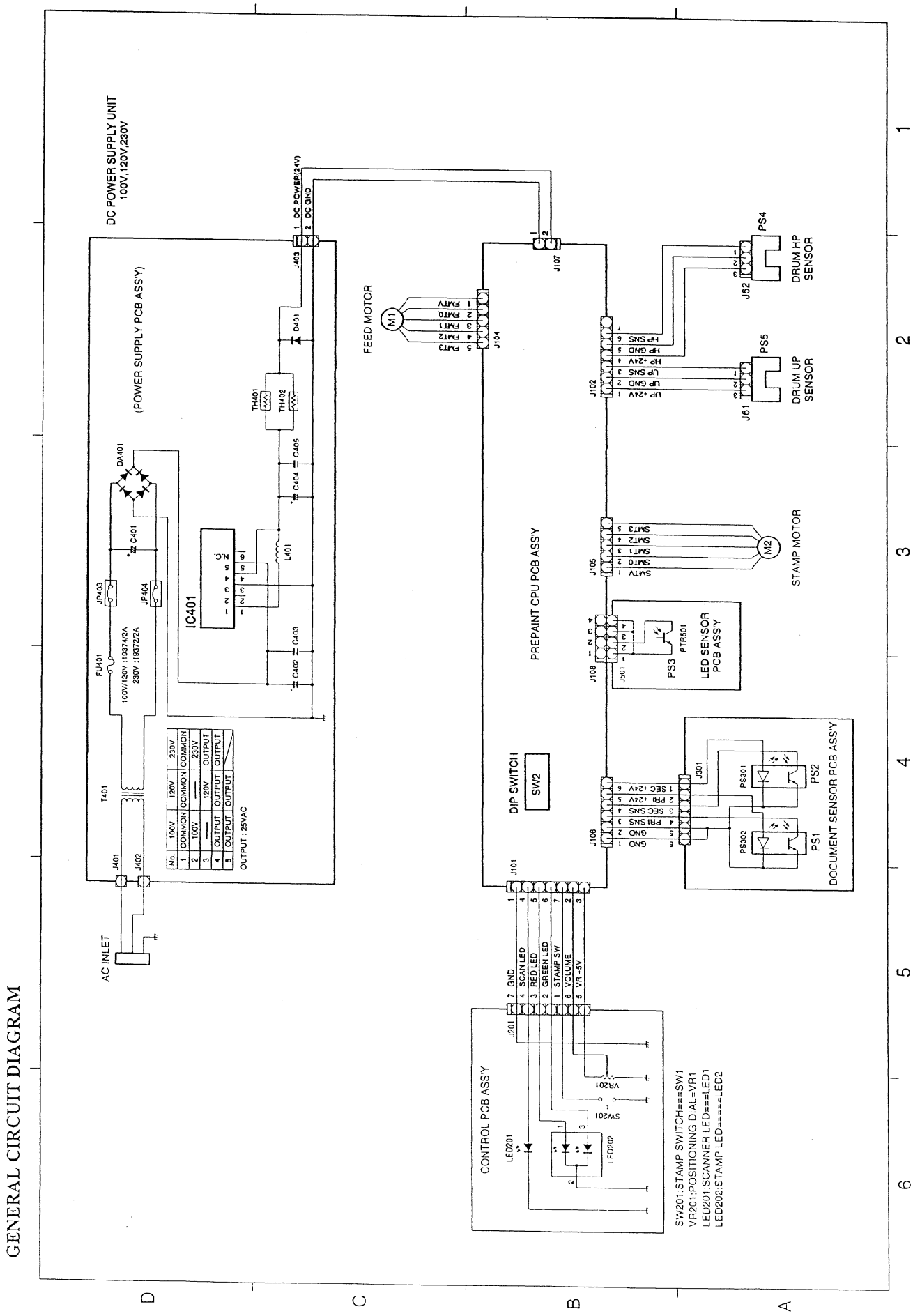

2) Prepaint CPU PCB ass'y circuit diagram

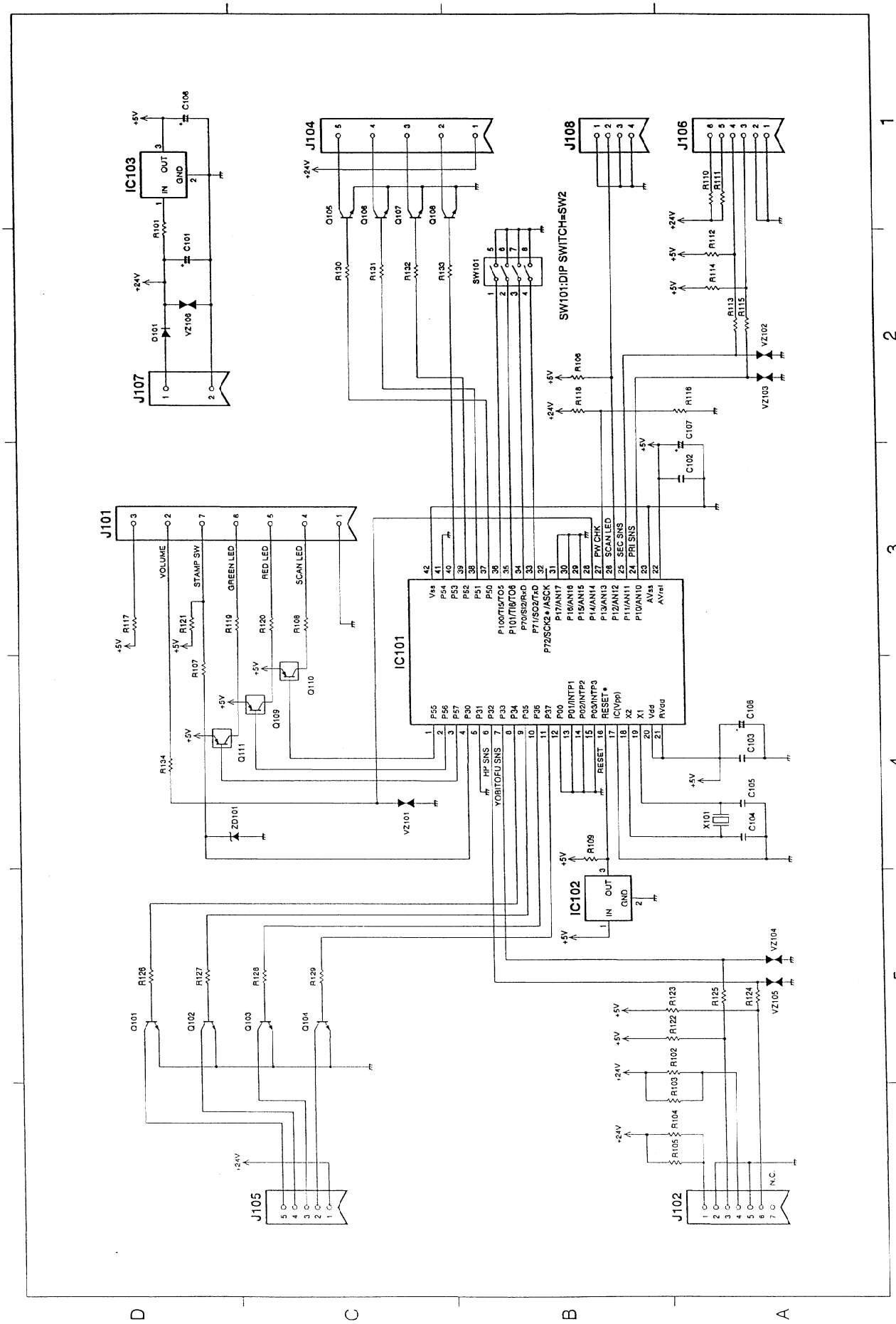

14. PART CATALOG

FIGURE 100 EXTERNAL COVERS
外装カバー部

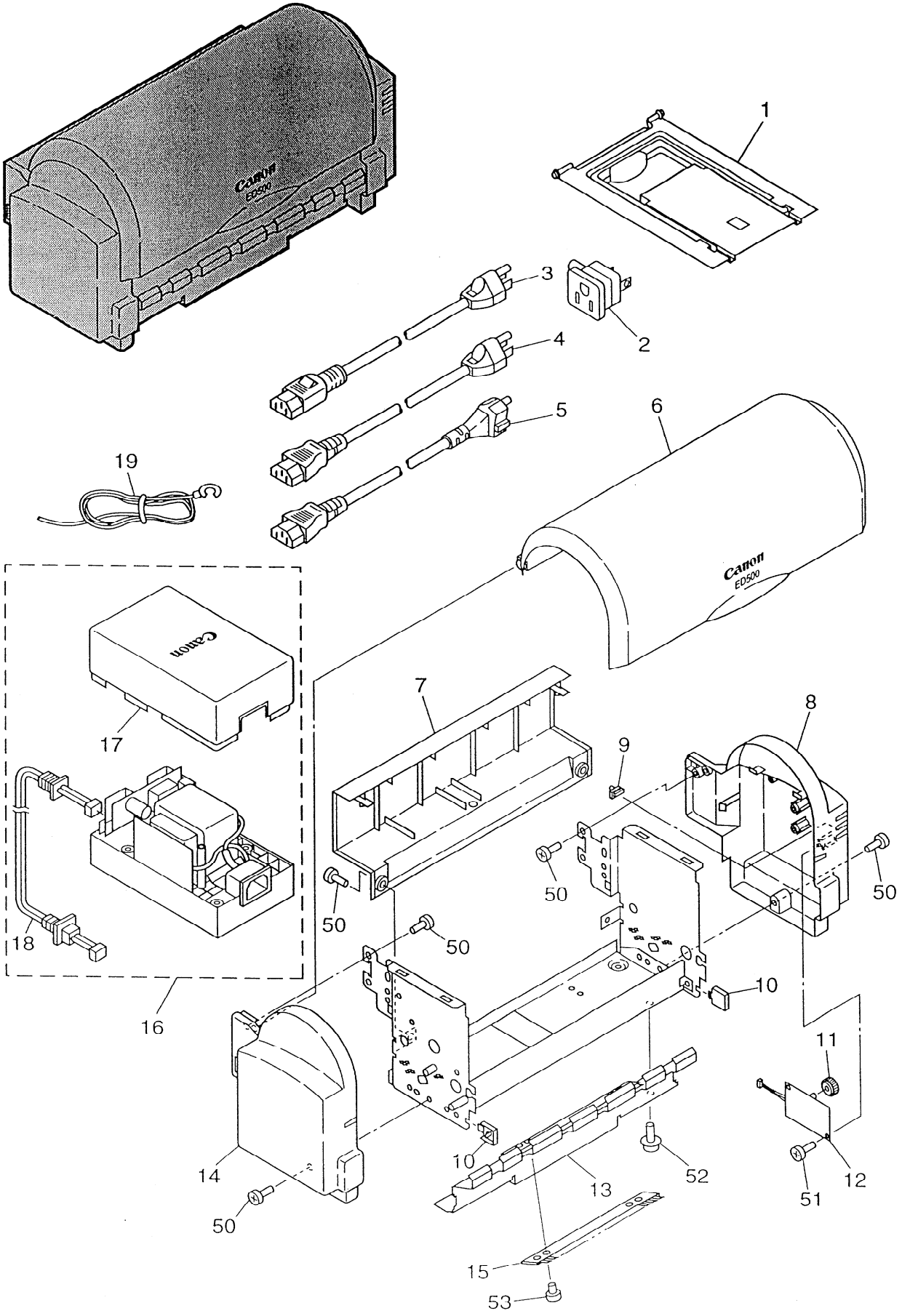

FIGURE & KEY NO.	PARTS NUMBER	RANK	Q'TY	DESCRIPTION	REMARKS
100- 1	MG1-2890-000		1	TRAY, DELIVERY E ハイシ トレイ E	
2	WS5-5069-000		1	PLUG ADAPTER, 2P コンセント アダプタ	100V
3	RH2-5096-000		1	POWER SUPPLY CORD デンゲン コード	100V
4	RH2-5145-020		1	POWER SUPPLY CORD デンゲン コード	120V
5	RH2-5014-030		1	POWER SUPPLY CORD デンゲン コード	230V
6	MA2-5273-000		1	COVER, UPPER カイヘイ ウエ カバー	
7	MA2-5272-000		1	COVER, REAR ウシロ カバー	
8	MF1-3849-000		1	COVER, RIGHT, JPN ミギ カバー	100V
	MF1-3834-000		1	COVER, RIGHT, ENG ミギ カバー	120, 230V
9	MA2-5269-000	N	1	KEY TOP, CONTROL ソウサブ キー	
10	MA2-5266-000	N	2	PLATE, SIDE COVER ソク バン カバー	
11	MF1-3836-000	N	1	KNOB, VOLUME ボリューム ツマミ	
12	MG1-2895-000		1	PCB ASSEMBLE , CONTROL ソウサ カイロキバン	
13	MA2-5264-000		1	PLATE, DELIVERY ROLLER GUIDE ハイシ ローラ ガイド バン	
14	MA2-5271-000		1	COVER, LEFT ヒダリ カバー	
15	WR8-0001-000		1	BRUSH, STATIC ELIMINATOR ジョデンキ	
16	MG1-2913-000		1	POWER SUPPLY UNIT, 100V デンゲン ユニット	100V
	MG1-2914-000		1	POWER SUPPLY UNIT, 120V デンゲン ユニット	120V
	MG1-2915-000		1	POWER SUPPLY UNIT, 230V デンゲン ユニット	230V
17	MA2-5276-000		1	COVER, POWER SUPPLY, UPPER デンゲン ウエ カバー	
18	MG1-2898-000		1	CABLE ASSEMBLY, DC POWER SUPPLY DC デンゲン ケーブル	
19	FH2-5006-000		1	WIRE, GROUNDING アース セン	100V
50	XB1-2300-606		6	SCREW, BH M3x6 バインド ネジ	
51	XB4-7300-809		2	SCREW, TAP, BINDING HEAD, M3x8 バインド タッピング ネジ	
52	XB6-7300-609		2	SCREW, TP M3x6 TPネジ	
53	XB1-2300-407		2	SCREW, BH M3x4 バインド ネジ	

FIGURE 200 INTERNAL COMPONENTS-1
本体機械内部-1

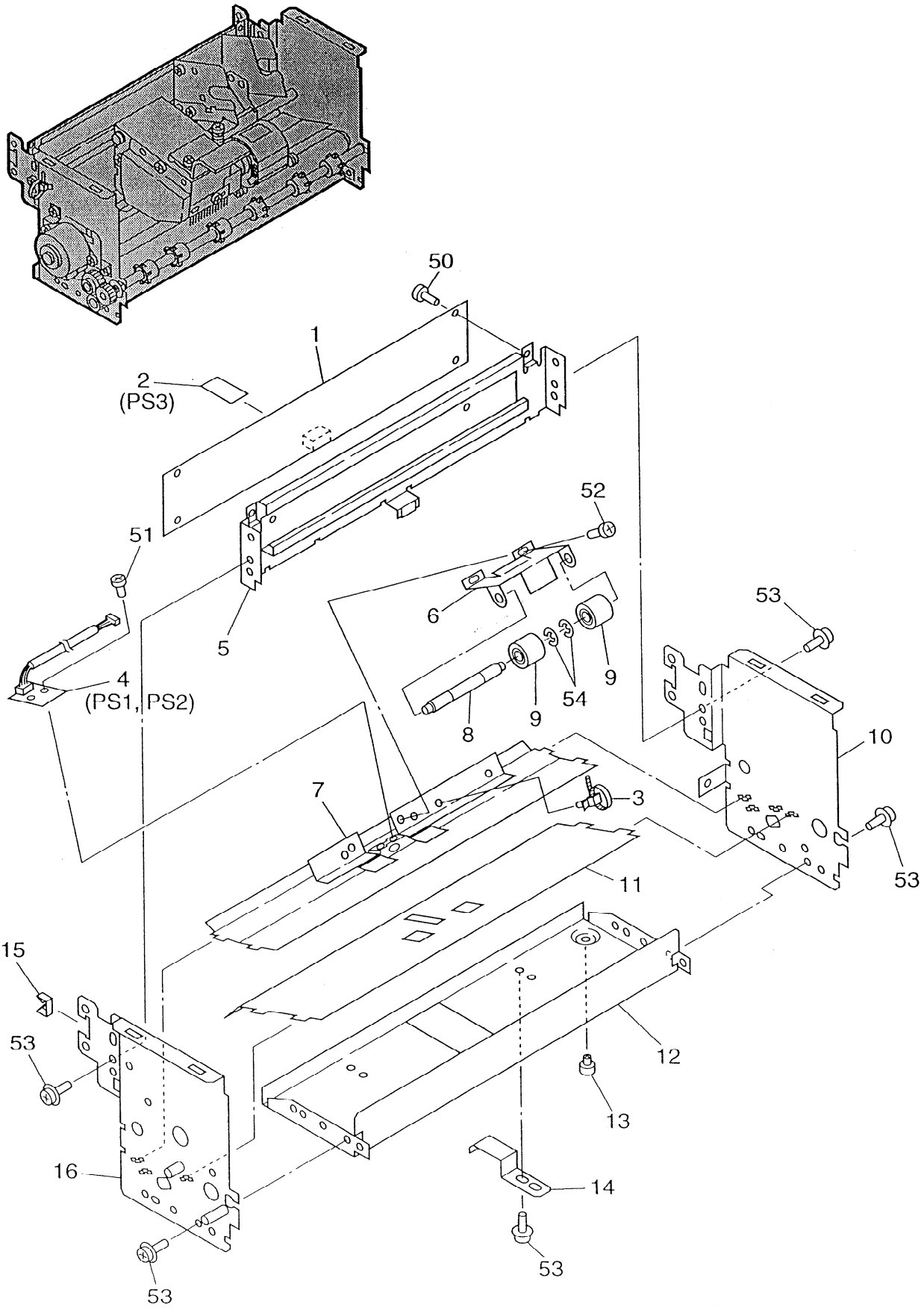

FIGURE & KEY NO.	PARTS NUMBER	RANK	Q'TY	DESCRIPTION	REMARKS
200– 1	MG1–2896–020		1	PCB ASSEMBLY, PREPAINT CPU プリペイントCPU カイロキバン	
2	MG1–2904–000		1	PCB ASSEMBLY, LED SENSOR LED センサ カイロキバン	
3	WT2–0365–000		2	CLIP, CABLE ツノツキ タバセン オサエ	
4	MG1–2894–000		1	PCB ASSEMBLY, DOCUMENT SENSOR (BO) ゲンコウ センサ (BO) カイロキバン	
5	MF1–3832–000	N	1	CROSSMEMBER, REAR ウシロ ステイ	
6	MA2–5251–000		1	SPRING, LEAF, FEED ROLLER ハンソウ ジュウドウ ローラ イタバネ	
7	MA2–5255–000	N	1	PLATE, UPPER GUIDE ウエ ガイド バン	
8	MA2–5265–000	N	1	SHAFT, FEEDER ROLLER ハンソウ ジュウドウ ローラ ジク	
9	MS1–6088–000		2	ROLLER, IDLE アイドル ローラ	
10	MA2–5254–000	N	1	PLATE, RIGHT SIDE ミギ ソク バン	
11	MA2–5256–000	N	1	PLATE, LOWER GUIDE シタ ガイド バン	
12	MF1–3847–000	N	1	PLATE, BOTTOM ソコ イタ	
13	RB1–3001–000	N	2	FOOT, RUBBER ゴム アシ	
14	MA2–5262–000	N	2	PLATE, STOPPER コテイ カナグ	
15	WT2–0136–000		2	CLIP, CABLE エッジ サドル	
16	MF1–3831–000	N	1	PLATE, LEFT SIDE ヒダリ ソク バン	
50	XB1–2300–606		4	SCREW, BH M3x6 バインド ネジ	
51	XB1–2300–409		2	SCREW, BH M3x4 バインド ネジ	
52	XB1–2400–409		2	SCREW, BH M4x4 バインド ネジ	
53	XB6–7300–609		8	SCREW, TP M3x6 TP ネジ	
54	XD2–1100–402		2	RING, E 4.0 Eガタ トメワ	

FIGURE 300 INTERNAL COMPONENTS-2
本体機械内部-2

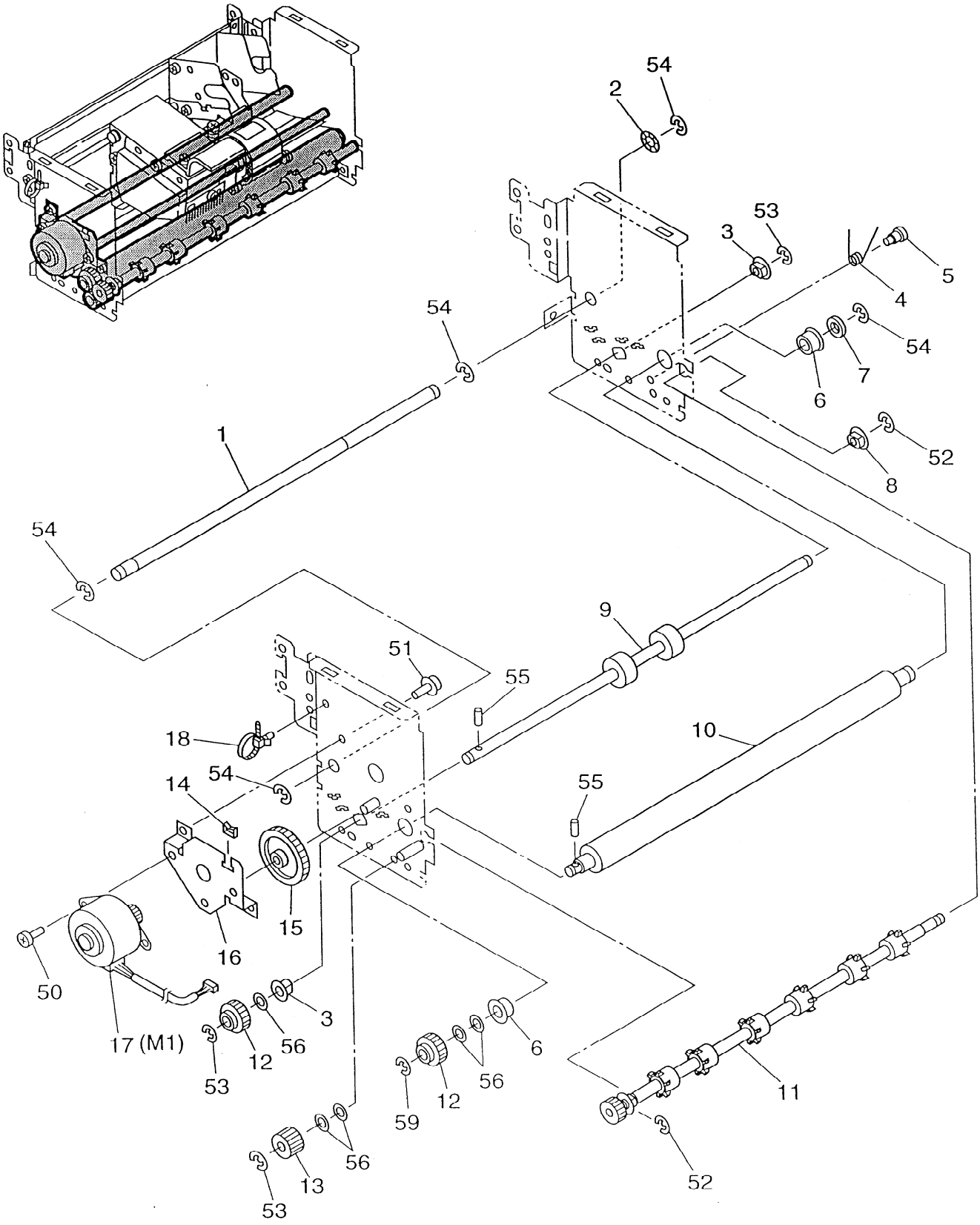

FIGURE & KEY NO.	PARTS NUMBER	RANK	Q'TY	DESCRIPTION	REMARKS
300- 1	MA2-5249-000	N	1	SHAFT, GUIDE ガイド ジク	
2	X71-9774-000		1	WASHER, WAVE ナミ ワッシャ	
3	FS1-1205-000		2	BUSHING ジクウケ	
4	MA2-5284-000		1	SPRING, TORSION, GROUNDING アース ヨウ ネジリ コイルバネ	
5	FS1-9009-000		1	TWO-STEP SCREW, M3 ダン ビス	
6	XG9-0211-000		2	BALL BEARING フランジツキ ベアリング	
7	XZ9-0380-000		1	SPACER, 8.0x4 スペーサ	
8	FS5-1005-000		1	BUSHING スベリ ジクウケ	
9	MA2-5257-000		1	ROLLER, FEEDER ハンソウ ローラ	
10	MA2-5258-000		1	ROLLER, PLATEN プラテン ローラ	
11	MF1-3833-000		1	ROLLER, DELIVERY ハイシ ローラ	
12	FS2-0605-000		2	GEAR, 30T ニュウリョク ギア	
13	MS1-0864-000		1	GEAR, FEED ADJUSTING B オクリ チョウセイ ギア B	
14	WT2-5056-000		1	CLIP, CABLE エッジ サドル	
15	MS1-0967-000		1	GEAR, FEED IDLE ハンソウ アイドラ ギア	
16	MA2-5261-000	N	1	MOUNT, MOTOR モータ キダイ	
17	MF1-3333-000		1	MOTOR, DC 7W (FEEDER) キョウツウ モータ (ハンソウ)	
18	WT2-0365-000		1	CLIP, CABLE ツノツキ タバセン オサエ	
50	XB1-2300-609		2	SCREW, BH M3x6 バインド ネジ	
51	XB6-7300-609		2	SCREW, TP M3x6 TPネジ	
52	XD2-1100-322		2	RING, E 3.2 Eガタ トメワ	
53	XD2-1100-502		4	RING, E 5.0 Eガタ トメワ	
54	XD2-1100-642		5	RING, E 6.4 Eガタ トメワ	
55	XD3-2160-102		2	PIN, DOWEL 1.6x10 ヘイコウ ピン	
56	XD1-1106-219		5	SHIM, 6.2x1.0 ヒョウジュン ワッシャ	

FIGURE 400 STAMP ASSEMBLY 押印部

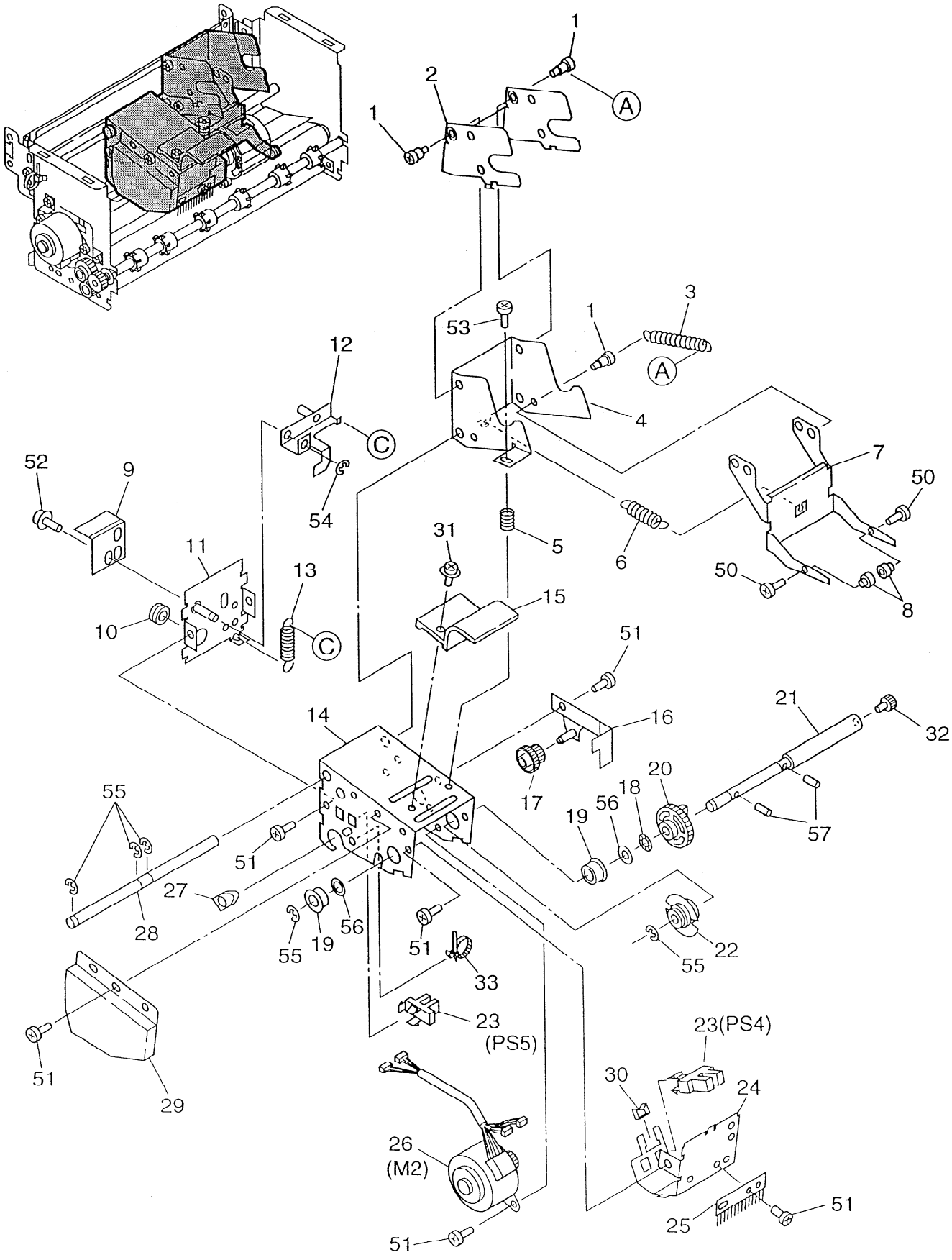

FIGURE & KEY NO.	PARTS NUMBER	RANK	Q'TY	DESCRIPTION	REMARKS
400- 1	FS1-9009-000		3	TWO-STEP SCREW, M3 ダン ビス	
2	MA2-4039-000	N	1	GUIDE, INK ROLLER インク ローラ ガイド	
3	MS1-2395-000		1	SPRING, TENSION, ROLLER インク ローラ シジ バネ	
4	MA2-4038-000	N	1	MOUNT, INK ROLLER インク ローラ キダイ	
5	MS1-2328-000		1	SPRING, COMPRESSION, ROLLER インク ローラ カアツ バネ	
6	MS1-2396-000		1	SPRING, TENSION, BEARING アシスト ローラ シジ バネ	
7	MA2-5250-000	N	1	MOUNT, ASSIST BEARING アシスト ローラ シャーシ	
8	MF1-3461-000	N	2	SHAFT, FEEDER ROLLER, DRIVE ハンソウ ローラ ジク	
9	MF1-3829-000	N	1	PLATE, STOPPER ストッパ キダイ	
10	WT2-5189-000		1	BUSHING ワンタッチ ブッシュ	
11	MF1-3827-000	N	1	PLATE, HOUSING REAR ハウジング セイタ	
12	MF1-3830-000	N	1	PLATE, SUPPORT ARM シジ アーム	
13	MS1-2394-000		1	SPRING, TENSION, STAMP オウイン ブ シジ バネ	
14	MA2-5237-000	N	1	HOUSING, ENDORSER エンドーサ ハウジング	
15	MA2-2668-000	N	1	KNOB, GREEN ミドリ イロ ツマミ 2	
16	MF1-3828-020	N	1	PLATE, GEAR COVER ギア カバー	
17	MS1-0966-000		1	GEAR, REDUCTION DRIVE クドウ ゲンソク ギア	
18	X71-9773-000		1	WASHER, WAVE ナミ ワッシャ	
19	XG3-6012-405		2	BALL BEARING, フランジ ツキ ベアリング	
20	MS1-0965-000		1	GEAR, DIE DRUM DRIVE ダイ ドラム クドウ ギア	
21	MA2-5246-000	N	1	SHAFT, DRUM ドラム ジク	
22	MA2-5247-000	N	1	PLATE, ENCODER, DIE DRUM ダイ ドラム エンコーダ	
23	WG8-5382-000		2	PHOTO INTERRUPTER フォトセンサ	
24	MA2-5239-000	N	1	PLATE, SENSOR COVER センサ トリツケ カバー	
25	RB1-6203-000	N	1	BRUSH, STATIC ELIMINATOR TR ジョデン ブラシ	
26	MG1-2921-000		1	MOTOR ASSEMBLY, DC 7W ギアツキ オウイン モータ ユニット	
27	MA2-5248-000		2	BUSHING ハウジング ジクウケ	
28	MA2-5245-000	N	1	SHAFT, INK ROLLER インクロール ジク	
29	MA2-5279-000	N	1	PLATE, HOUSING COVER ハウジング カバー	
30	WT2-5056-000		1	CLIP, CABLE エッジ サドル	
31	XA9-0397-000		1	SCREW, TP M3x6 TP ネジ	
32	XA9-0964-000		1	SCREW, KNOB M4x8 ツマミツキ ネジ	
33	WT2-0365-000		1	CLIP, CABLE ツノツキ タバセン オサエ	
50	XB1-2200-506		2	SCREW, BH M2x5 バインド ネジ	
51	XB1-2300-409		8	SCREW, BH M3x4 バインド ネジ	

FIGURE & KEY NO.	PARTS NUMBER	RANK	Q'TY	DESCRIPTION	REMARKS
400– 52	XB6–7300–609		1	SCREW, TP M3x6 TP ネジ	
53	XB1–2301–609		1	SCREW, BH M3x16 バインド ネジ	
54	XD2–1100–322		1	RING, E 3.2 Eガタ トメワ	
55	XD2–1100–502		5	RING, E 5.0 Eガタ トメワ	
56	XD1–1106–223		2	SHIM, 6.2x0.3 ヒョウジュン ワッシャ	
57	XD3–2200–102		2	PIN, DOWEL φ2.0x10 ヘイコウ ピン	

FIGURE 500 DIE DRUM ASSEMBLY
ダイドラム部（B110）

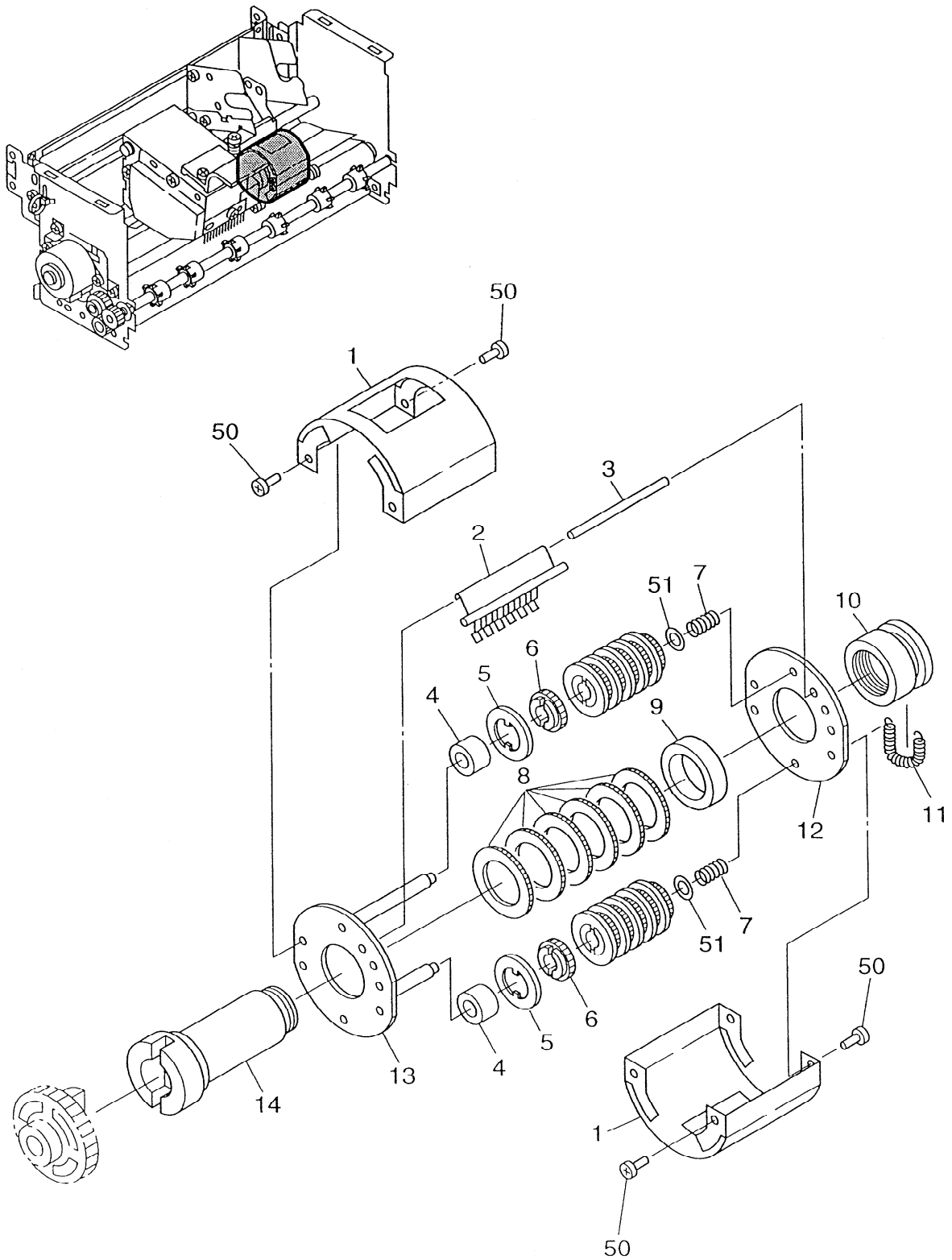

FIGURE & KEY NO.	PARTS NUMBER	RANK	Q'TY	DESCRIPTION	REMARKS
500– 1	MA1–4883–020		2	PLATE, STAMP オウインバン ハリツケ イタ	
2	MA1–4872–000	N	1	SPRING, PLATE オサエ バネ	
3	MA1–4874–000	N	1	SHAFT, PLATE SPRING イタバネ ヨウ ジク	
4	MA1–4878–000	N	2	COLLAR カラー	
5	MA1–4871–030	N	12	RING, STAMP, BROWN モジ ワク	
6	MA2–2056–020		12	GEAR, SET–RING, LIGHT BLUE モジワ トリツケ ハグルマ	
7	MS1–2334–000		2	SPRING, COMPRESSION アッシュク バネ	
8	MA1–4873–000		6	GEAR ヒラ ハグルマ	
9	MA1–4877–000	N	1	COLLAR カラー	
10	MA1–4880–000	N	1	HOLDER ホルダ	
11	MA1–4882–000	N	1	SPRING, CLICK クリック ヨウ スプリング	
12	MA1–4875–000	N	1	COVER ソク バン	
13	MF1–0942–000	N	1	PLATE, SIDE ソク バン	
14	MA1–4881–000	N	1	SHAFT, MAIN メイン シャフト	
50	XB1–2300–409		8	SCREW, BH M3x4 バインド ネジ	
51	XD1–1104–125		2	SHIM, 4.1x0.5 ヒョウジュン ワッシャ	

NUMERICAL INDEX
部品索引表

PARTS NO.	FIG.-KEYNUMBER	Q'TY	PARTS NO.	FIG.-KEYNUMBER	Q'TY	PARTS NO.	FIG.-KEYNUMBER	Q'TY
FH2-5006-000	100-19	1	MA2-5272-000	100-07	1	RH2-5096-000	100-03	1
			MA2-5273-000	100-06	1	RH2-5145-020	100-04	1
FS1-1205-000	300-03	2	MA2-5276-000	100-17	1			
FS1-9009-000	300-05	1	MA2-5279-000	400-29	1	WG8-5382-000	400-23	2
FS1-9009-000	400-01	3	MA2-5284-000	300-04	1			
						WR8-0001-000	100-15	1
FS2-0605-000	300-12	2	MF1-0942-000	500-13	1			
			MF1-3333-000	300-17	1	WS5-5069-000	100-02	1
FS5-1005-000	300-08	1	MF1-3461-000	400-08	2			
			MF1-3827-000	400-11	1	WT2-0136-000	200-15	2
MA1-4871-030	500-05	12	MF1-3828-020	400-16	1	WT2-0365-000	200-03	2
MA1-4872-000	500-02	1	MF1-3829-000	400-09	1	WT2-0365-000	300-18	1
MA1-4873-000	500-08	6	MF1-3830-000	400-12	1	WT2-0365-000	400-33	1
MA1-4874-000	500-03	1	MF1-3831-000	200-16	1	WT2-5056-000	300-14	1
MA1-4875-000	500-12	1	MF1-3832-000	200-05	1	WT2-5056-000	400-30	1
MA1-4877-000	500-09	1	MF1-3833-000	300-11	1	WT2-5189-000	400-10	1
MA1-4878-000	500-04	2	MF1-3834-000	100-08	1			
MA1-4880-000	500-10	1	MF1-3836-000	100-11	1	X71-9773-000	400-18	1
MA1-4881-000	500-14	1	MF1-3847-000	200-12	1	X71-9774-000	300-02	1
MA1-4882-000	500-11	1	MF1-3849-000	100-08	1			
MA1-4883-020	500-01	2				XA9-0397-000	400-31	1
			MG1-2890-000	100-01	1	XA9-0964-000	400-32	1
MA2-2056-020	500-06	12	MG1-2894-000	200-04	1			
MA2-2668-000	400-15	1	MG1-2895-000	100-12	1	XB1-2200-506	400-50	2
MA2-4038-000	400-04	1	MG1-2896-020	200-01	1	XB1-2300-407	100-53	2
MA2-4039-000	400-02	1	MG1-2898-000	100-18	1	XB1-2300-409	200-51	2
MA2-5237-000	400-14	1	MG1-2904-000	200-02	1	XB1-2300-409	400-51	8
MA2-5239-000	400-24	1	MG1-2913-000	100-16	1	XB1-2300-409	500-50	8
MA2-5245-000	400-28	1	MG1-2914-000	100-16	1	XB1-2300-606	100-50	6
MA2-5246-000	400-21	1	MG1-2915-000	100-16	1	XB1-2300-606	200-50	4
MA2-5247-000	400-22	1	MG1-2921-000	400-26	1	XB1-2300-609	300-50	2
MA2-5248-000	400-27	2				XB1-2301-609	400-53	1
MA2-5249-000	300-01	1	MS1-0864-000	300-13	1	XB1-2400-409	200-52	2
MA2-5250-000	400-07	1	MS1-0965-000	400-20	1			
MA2-5251-000	200-06	1	MS1-0966-000	400-17	1	XB4-7300-809	100-51	2
MA2-5254-000	200-10	1	MS1-0967-000	300-15	1			
MA2-5255-000	200-07	1	MS1-2328-000	400-05	1	XB6-7300-609	100-52	2
MA2-5256-000	200-11	1	MS1-2334-000	500-07	2	XB6-7300-609	200-53	8
MA2-5257-000	300-09	1	MS1-2394-000	400-13	1	XB6-7300-609	300-51	2
MA2-5258-000	300-10	1	MS1-2395-000	400-03	1	XB6-7300-609	400-52	1
MA2-5261-000	300-16	1	MS1-2396-000	400-06	1			
MA2-5262-000	200-14	2	MS1-6088-000	200-09	2	XD1-1104-125	500-51	2
MA2-5264-000	100-13	1				XD1-1106-219	300-56	5
MA2-5265-000	200-08	1	RB1-3001-000	200-13	2	XD1-1106-223	400-56	2
MA2-5266-000	100-10	2	RB1-6203-000	400-25	1			
MA2-5269-000	100-09	1				XD2-1100-322	300-52	2
MA2-5271-000	100-14	1	RH2-5014-030	100-05	1	XD2-1100-322	400-54	1

PARTS NO.	FIG.-KEYNUMBER	Q'TY	PARTS NO.	FIG.-KEYNUMBER	Q'TY	PARTS NO.	FIG.-KEYNUMBER	Q'TY
XD2-1100-402	200-54	2						
XD2-1100-502	300-53	4						
XD2-1100-502	400-55	5						
XD2-1100-642	300-54	5						
XD3-2160-102	300-55	2						
XD3-2200-102	400-57	2						
XG3-6012-405	400-19	2						
XG9-0211-000	300-06	2						
XZ9-0380-000	300-07	1						

Endorser ED500
Endorser ED600

PARTS CATALOG

REVISION 0

ED500	100V	50/60Hz	M18-0541
	120V	60Hz	M18-0543
	230V	50/60Hz	M18-0544
ED600			M18-0631

Canon

NOV. 1999 MY8-3192-000

A02

COPYRIGHT©1999 CANON ELECTRONICS INC. CANON ED500/ED600 REV.0 NOV. 1999 PRINTED IN JAPAN (IMPRIME AU JAPON)

序

このパーツ・カタログは，ED500/ED600 に対するサービス部品調達の手引として発行します。
サービス部品の要求は、キヤノン販売営業所にお願い致します。
製品に大きな変更がある場合は，改訂版のパーツ・カタログを発行しますが，その他の場合は随時新しい情報をお届けします。
このパーツ・カタログは当社品質保証部品質推進課が発行管理を行っています。

キヤノン電子株式会社
品質保証部 品質推進課

PREFACE

This Parts Catalog contains listings of parts used in the ED500/ED600.
Diagrams are provided with the listings to aid the service technician in identifying clearly, the item to be ordered.

Whenever ordering parts, consult this Parts Catalog for all of the information pertaining to each item. Be sure to include in the Parts Request, the full item description, the item part number and the quantity.

Quality Assurance Center
Canon Electronics Inc.

版権所有，無断転載，引用を禁ず。
Copyright © 1999 Canon Electronics Inc.
Printed in Japan
Imprimé au Japon

本マニュアルについては，機密保持等その取扱には十分注意して下さい。
万一取扱を誤りますと法律で処罰されることがあります。

Use of this manual should be strictly supervised to avoid disclosure of confidential information.

A03

目　　次

I.Endorser ED500

		イラスト	リスト
A	主要部品配置図	1F-B02	
B	イラスト索引	1F-B03	
100	外装カバー部	1F-C01	1F-C02
200	本体機械内部－1	1F-C03	1F-C04
300	本体機械内部－2	1F-C05	1F-C06
400	押印部	1F-C07	1F-C08,09
500	ダイドラム部	1F-C10	1F-C11
C	部品索引表	1F-D01,D02	

II.Endorser ED600

		イラスト	リスト
A	主要部品配置図	1F-E02	
B	イラスト索引	1F-E03	
100	外装カバー部	1F-F01	1F-F02
200	本体機械内部－1	1F-F03	1F-F04
300	本体機械内部－2	1F-F05	1F-F06,07
400	押印部	1F-F08	1F-F09
C	部品索引表	1F-G01	

A04

COPYRIGHT©1999 CANON ELECTRONICS INC. CANON ED500/ED600 REV.0 NOV. 1999 PRINTED IN JAPAN (IMPRIME AU JAPON)

CONTENTS

I. Endorser ED500

		ILLUST	LIST
A	ASSEMBLY LOCATION DIAGRAM	1F-B02	
B	ILLSTRATION INDEX	1F-B03	
100	EXTERNAL COVERS	1F-C01	1F-C02
200	INTERNAL COMPONENTS-1	1F-C03	1F-C04
300	INTERNAL COMPONENTS-2	1F-C05	1F-C06
400	STAMP ASSEMBLY	1F-C07	1F-C08,09
500	DIE DRUM ASSEMBLY	1F-C10	1F-C11
C	NUMERICAL INDEX	1F-D01,D02	

II. Endorser ED600

		ILLUST	LIST
A	ASSEMBLY LOCATION DIAGRAM	1F-E02	
B	ILLSTRATION INDEX	1F-E03	
100	EXTERNAL COVERS	1F-F01	1F-F02
200	INTERNAL COMPONENTS-1	1F-F03	1F-F04
300	INTERNAL COMPONENTS-2	1F-F05	1F-F06,07
400	STAMP ASSEMBLY	1F-F08	1F-F09
C	NUMERICAL INDEX	1F-G01	

COPYRIGHT©1999 CANON ELECTRONICS INC. CANON ED500/ED600 REV.0 NOV. 1999 PRINTED IN JAPAN (IMPRIME AU JAPON)

パーツカタログの見方

主要部品配置図について

部品図番号（Figure No.）および各アセンブリの位置を捜すとき，主要部品配置図を用います。

図中 [　] 内は部品図名称，(　) 内は部品図番号とアドレス番号を示しています。

また，「イラスト索引」からも検索できます。

部品番号の捜し方

どのアセンブリに使用されている部品かを，主要部品配置図またはイラスト索引で調べその部品図番号（Figure No.）のページをめくります。

部品図の中からその部品をみつけ，そのキーNo.を部品番号リストの中から捜し出せば，部品番号・部品名称を知ることができます。

注：電源電圧・周波数等の仕様が異なる場合は，同一のキーNo.に複数の部品番号が記されているので“REMARKS”欄を注意して見るようにしてください。

部品番号リストについて

部品番号リストの内容項目は次のとおりです。

(1)部品図番号およびキーNo.（FIGURE & KEY No.）

部品図番号は，各部品番号リスト欄の左上に示してあり，各部品図に対応しています。

また，キーNo.は，部品図中に示してある個々の部品に対応します。

(2)部品番号（PART NUMBER）

リストの2番目の欄には，部品番号が示してあります。

部品を発注する際は，必ずこの番号を明示してください。

注：部品番号の末尾3桁を訂番といいます。部品改良等の目的で部品の一部が変更になった場合，訂番が変わることがあります。これらの変更については，技術情報（Service Information）で随時連絡されますので，常にこれらの情報も注意深く読むよう心がけてください。

(3)ラ　ン　ク（RANK）

Nと記載されている部品はサービスパーツに設定されていますが，在庫はされていません。注文を受けてからの受注生産になります。

(4)使用個数（Q'TY）

4番目の使用個数欄に示してある数字は，各部品図中における各部品の使用数量を示しています。

使用個数欄には数字の他に以下のアルファベット文字も表示されています。

AR　数量を限定せず，組立時に必要に応じた数量を使用するもの，および個数の明記できないもの

(5)部品名称（DESCRIPTION）

個々の部品の名称が英文と和文で記されています。部品発注の際，部品名称も必ず明示してください。

電気部品等の主な仕様・型番は，英文の末尾に記しているものもあります。

(6)備考（REMARKS）

電源電圧・周波数等の仕様の違いがある場合に，表示しています。

これらの表示のないものについてはすべての機械に適用できます。

部品索引表（NUMERICAL INDEX）

部品番号の索引が巻末にあります。

部品番号がわかっていて，使用場所を調べる場合に活用できます。

索引表の左の欄が部品番号（PART No.），中央の欄が部品番号（FIGURE No.）とキーNo.（KEY No.），右の欄が使用個数（Q'TY）を示しています。

A06

COPYRIGHT©1999 CANON ELECTRONICS INC.　CANON ED500/ED600 REV.0 NOV. 1999 PRINTED IN JAPAN (IMPRIME AU JAPON)

HOW TO USE PARATS CATALOG

Assembly Location Diagrams

These diagrams show Figure Number and the locations of major assemblies of the machine. Figure names are identified in rectangular boxes [ ], and Figure numbers and address numbers are identified in elliptic boxes ( ). Also, it is possible to be found out by "Illustration Index".

Finding a Parts Number

Refer to the Assembly Location Diagrams or Illustration Index, and find out the Figure Number. Turn to the page (s), and find its Key Number. Refer to the Parts List, and find the Key Number, Part Number and Description.

Note : While looking for a Part Number, pay particular attention to the voltage listed in the "REMARKS" column to ensure that the Part Number selected is for your type of machine.

Part List pages

The Parts List pages contain the following columns and information.

(1) Figure and Key Number.

The first column shows the Figure Number of the illustration corresponding to the Parts List, and the Key Number that identifies the part on the illustration.

(2) Part Number.

The second column shows the Part Number for the part. This Number must be used when ordering replacement parts or assemblies.

Note : The last three digits (suffix) of the Parts Number are called the Revision Number. The Revision Number is changed of the part is modified. Information regarding such changes will be provided by Service Information Bulletins. These Bulletins should be read carefully.

(3) Rank.

Parts marked "N" are service parts, but are not stock items. They are produced on a special-order basis.

(4) Quantity (Q'ty).

The quantity shown in this column is the number of parts used in the figure.

This column indicates the following alphabets as well as numeric characters.

AR This indicates that the quantity of a part is not specified, allowing the use of the number of parts needed for assembly and that the quantity cannot be mentioned clearly.

(5) Description.

The Description column lists the description in Japanese and in English. When ordering the part. Such description Should be use as well as the part number. Some major specifications and type numbers are described at the end of the description in English.

(6) Remarks.

When there are differences in the specifications of power supply voltage or others, the differences are described in this column.

If there are not such differences, the part is available for all machines.

Numerical Index

There is a Numerical Index at the end of this catalog. It can be used when looking for the location where the part is used, if you know the part number. The first column shows the Part Number, the second column lists the Figure and Key Number and the third column shows the used quantities.

COPYRIGHT©1999 CANON ELECTRONICS INC. CANON ED500/ED600 REV.0 NOV. 1999 PRINTED IN JAPAN (IMPRIME AU JAPON)

Endorser ED500

100V	50/60Hz	M18-0541
120V	60Hz	M18-0543
230V	50/60Hz	M18-0544

B01

COPYRIGHT©1999 CANON ELECTRONICS INC. CANON ED500/ED600 REV.0 NOV. 1999 PRINTED IN JAPAN (IMPRIME AU JAPON)

FIGURE A ASSEMBLY LOCATION DIAGRAM
主要部品配置図

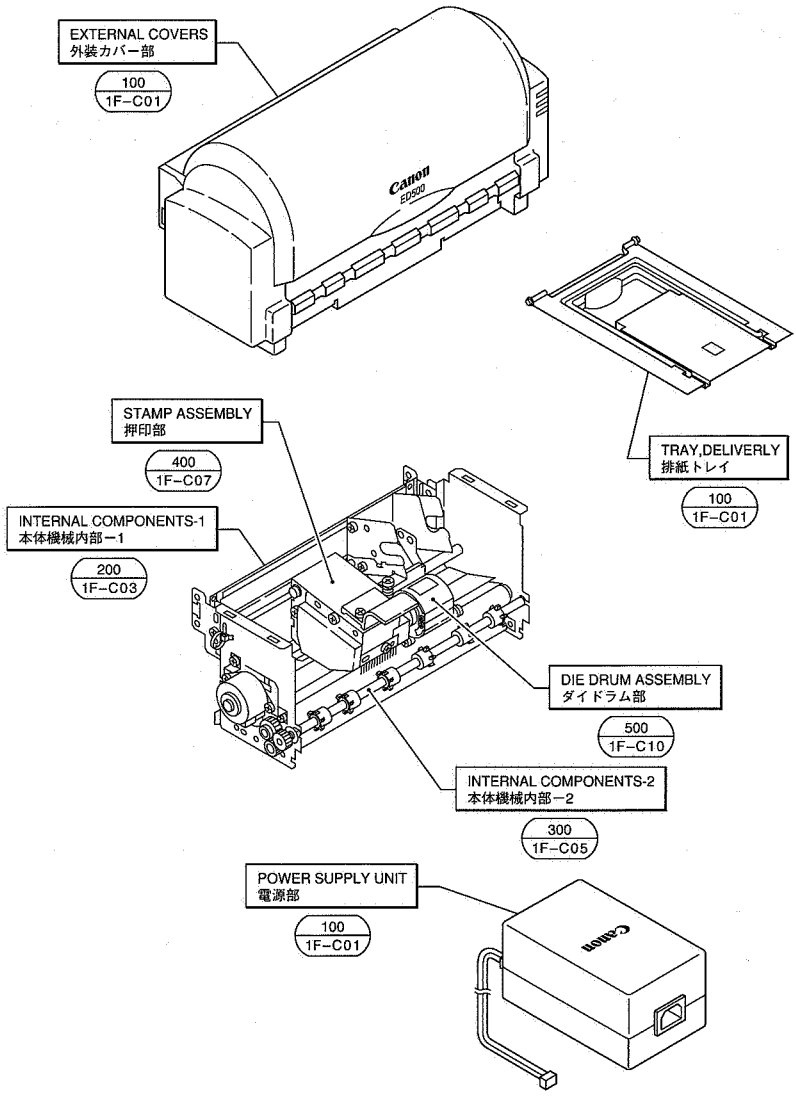

B02

COPYRIGHT©1999 CANON ELECTRONICS INC. CANON ED500/ED600 REV.0 NOV. 1999 PRINTED IN JAPAN (IMPRIME AU JAPON)

FIGURE B ILLUSTRATION INDEX
イラスト索引

FIGURE 100 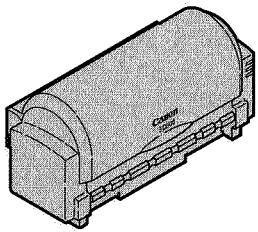 1F-C01	FIGURE 200 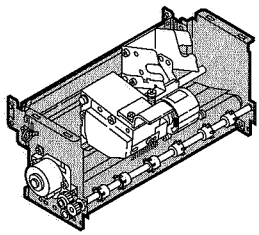 1F-C03	FIGURE 300 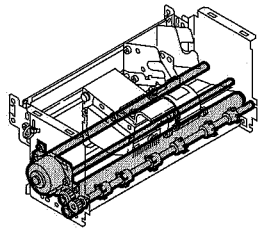 1F-C05
FIGURE 400 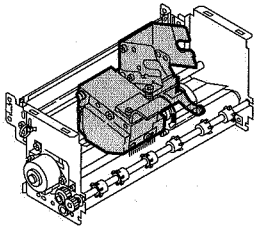 1F-C07	FIGURE 500 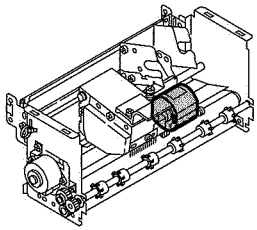 1F-C10	

B03

COPYRIGHT©1999 CANON ELECTRONICS INC. CANON ED500/ED600 REV.0 NOV. 1999 PRINTED IN JAPAN (IMPRIME AU JAPON)

FIGURE 100 EXTERNAL COVERS
外装カバー部

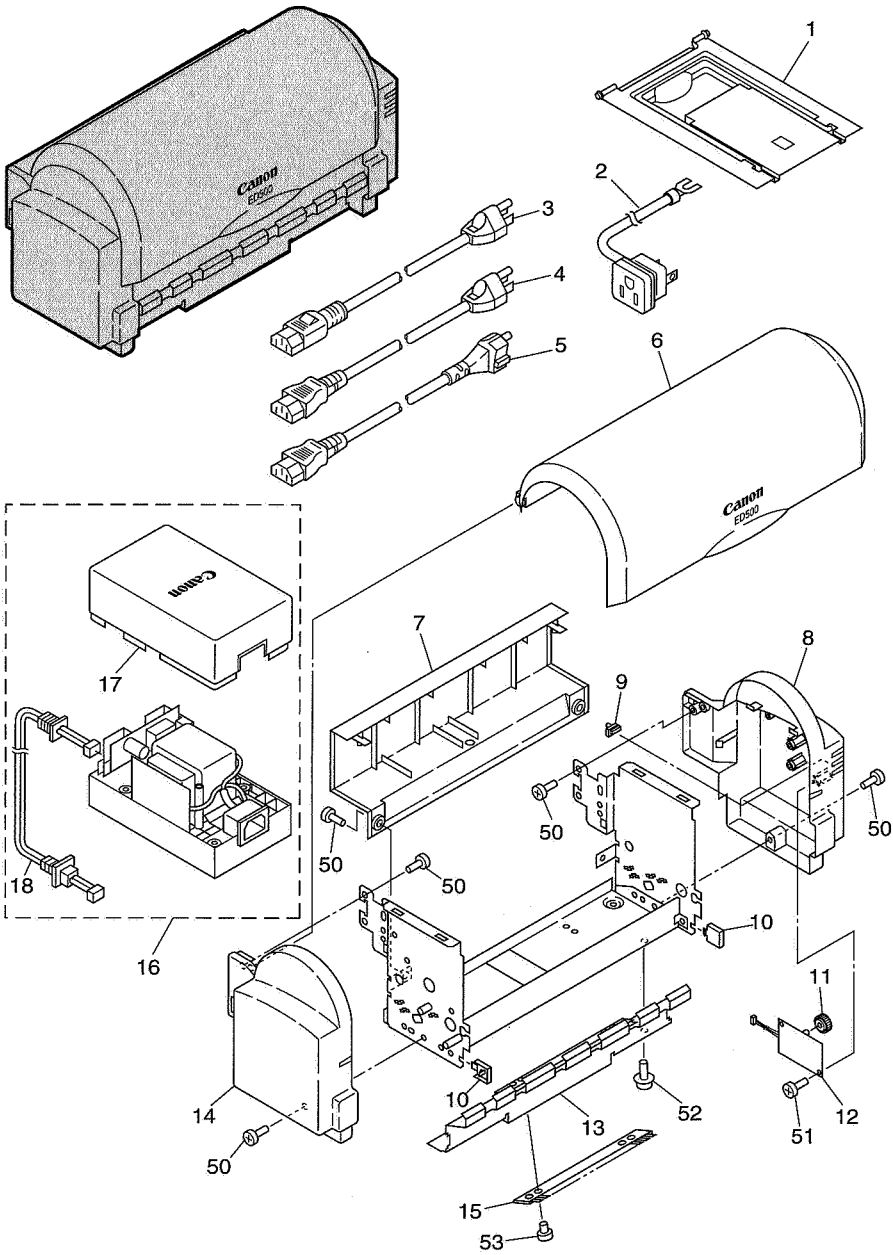

C01

 COPYRIGHT©1999 CANON ELECTRONICS INC. CANON ED500/ED600 REV.0 NOV. 1999 PRINTED IN JAPAN (IMPRIME AU JAPON)

FIGURE & KEY NO.	PARTS NUMBER	RANK	Q'TY	DESCRIPTION	REMARKS
100- 1	MG1-2890-000		1	TRAY, DELIVERY E ハイシ トレイ E	
2	MH3-8006-000		1	PLUG ADAPTER, 2P コンセント アダプタ	100V
3	RH2-5096-000		1	POWER SUPPLY CORD, 100V デンゲン コード	100V
4	RH2-5145-020		1	POWER SUPPLY CORD, 115V デンゲン コード	120V
5	RH2-5014-030		1	POWER SUPPLY CORD, 220V デンゲン コード	230V
6	MA2-5273-000		1	COVER, UPPER カイヘイ ウエ カバー	
7	MA2-5272-000		1	COVER, REAR ウシロ カバー	
8	MF1-3849-000		1	COVER, RIGHT, JPN ミギ カバー	100V
	MF1-3834-000		1	COVER, RIGHT, ENG ミギ カバー	120, 230V
9	MA2-5269-000	N	1	KEY TOP, CONTROL ソウサブ キー	
10	MA2-5266-020	N	2	PLATE, SIDE COVER ソク バン カバー	
11	MF1-3836-000	N	1	KNOB, VOLUME ボリューム ツマミ	
12	MG1-2895-000		1	PCB ASSEMBLE , CONTROL ソウサ カイロキバン	
13	MA2-5264-000		1	PLATE, DELIVERY ROLLER GUIDE ハイシ ローラ ガイド バン	
14	MA2-5271-000		1	COVER, LEFT ヒダリ カバー	
15	WR8-0001-000		1	BRUSH, STATIC ELIMINATOR ジョデンキ	
16	MG1-2913-000		1	POWER SUPPLY UNIT,100V デンゲン ユニット	100V
	MG1-2914-000		1	POWER SUPPLY UNIT,120V デンゲン ユニット	120V
	MG1-2915-000		1	POWER SUPPLY UNIT,230V デンゲン ユニット	230V
17	MA2-5276-000		1	COVER, POWER SUPPLY, UPPER デンゲン ウエ カバー	
18	MG1-2898-000		1	CABLE ASSEMBLY, DC POWER SUPPLY DC デンゲン ケーブル	
50	XB1-2300-606		6	SCREW, BH M3x6 バインド ネジ	
51	XB4-7300-809		2	SCREW, TAP, BINDING HEAD, M3x8 バインド タッピング ネジ	
52	XB6-7300-609		2	SCREW, TP M3x6 TP ネジ	
53	XB1-2300-407		2	SCREW, BH M3x4 バインド ネジ	

C02

COPYRIGHT©1999 CANON ELECTRONICS INC. CANON ED500/ED600 REV.0 NOV. 1999 PRINTED IN JAPAN (IMPRIME AU JAPON)

FIGURE 200 INTERNAL COMPONENTS-1
本体機械内部－1

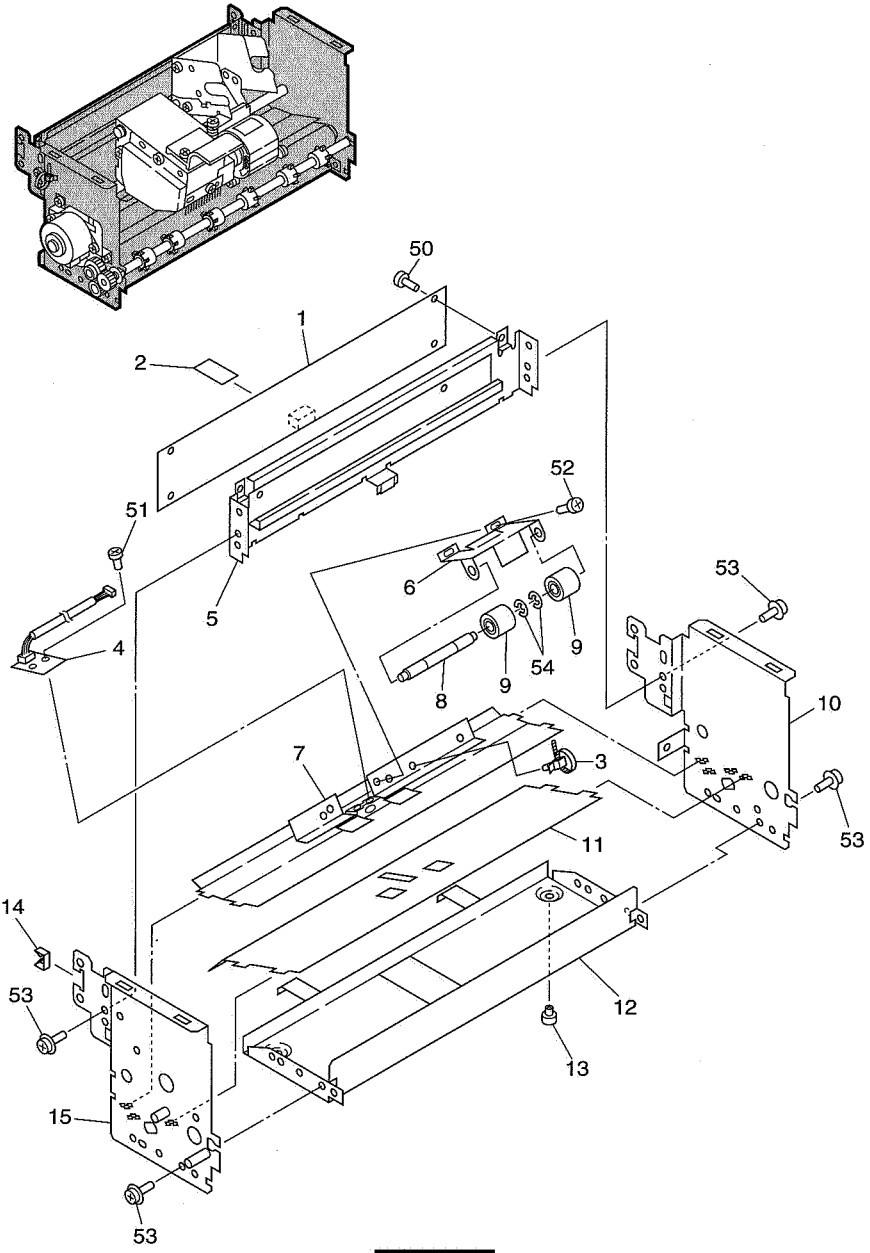

C03

 COPYRIGHT©1999 CANON ELECTRONICS INC. CANON ED500/ED600 REV.0 NOV. 1999 PRINTED IN JAPAN (IMPRIME AU JAPON)

FIGURE & KEY NO.	PARTS NUMBER	RANK	Q'TY	DESCRIPTION	REMARKS
200- 1	MG1-2896-020		1	PCB ASSEMBLY, PREPAINT CPU PREPAINT CPU カイロキバン	
2	MG1-2904-000		1	PCB ASSEMBLY, LED SENSOR LED センサ カイロキバン	
3	WT2-0365-000		2	CLIP, CABLE ツノツキ タバセン オサエ	
4	MG1-2894-000		1	PCB ASSEMBLY, DOCUMENT SENSOR (BO) ゲンコウ センサ (BO) カイロキバン	
5	MF1-3832-000	N	1	CROSSMEMBER, REAR ウシロ ステイ	
6	MA2-5251-000		1	SPRING, LEAF, FEED ROLLER ハンソウ ジュウドウ ローラ イタバネ	
7	MA2-5255-000	N	1	PLATE, UPPER GUIDE ウエ ガイド バン	
8	MA2-5265-000	N	1	SHAFT, FEEDER ROLLER ハンソウ ジュウドウ ローラ ジク	
9	MS1-6088-000		2	ROLLER, IDLE アイドル ローラ	
10	MA2-5254-000	N	1	PLATE, RIGHT SIDE ミギ ソク バン	
11	MA2-5256-000	N	1	PLATE, LOWER GUIDE シタ ガイド バン	
12	MF1-3847-020	N	1	PLATE, BOTTOM ソコ イタ	
13	RB1-3001-000	N	2	FOOT, RUBBER ゴム アシ	
14	WT2-0136-000		2	CLIP, CABLE エッジ サドル	
15	MF1-3831-000	N	1	PLATE, LEFT SIDE ヒダリ ソク バン	
50	XB1-2300-606		4	SCREW, BH M3x6 バインド ネジ	
51	XB1-2300-409		2	SCREW, BH M3x4 バインド ネジ	
52	XB1-2400-409		2	SCREW, BH M4x4 バインド ネジ	
53	XB6-7300-609		4	SCREW, TP M3x6 TP ネジ	
54	XD2-1100-402		2	RING, E φ4.0 Eガタ トメワ	

C04

COPYRIGHT©1999 CANON ELECTRONICS INC. CANON ED500/ED600 REV.0 NOV. 1999 PRINTED IN JAPAN (IMPRIME AU JAPON)

FIGURE 300 INTERNAL COMPONENTS-2
本体機械内部－2

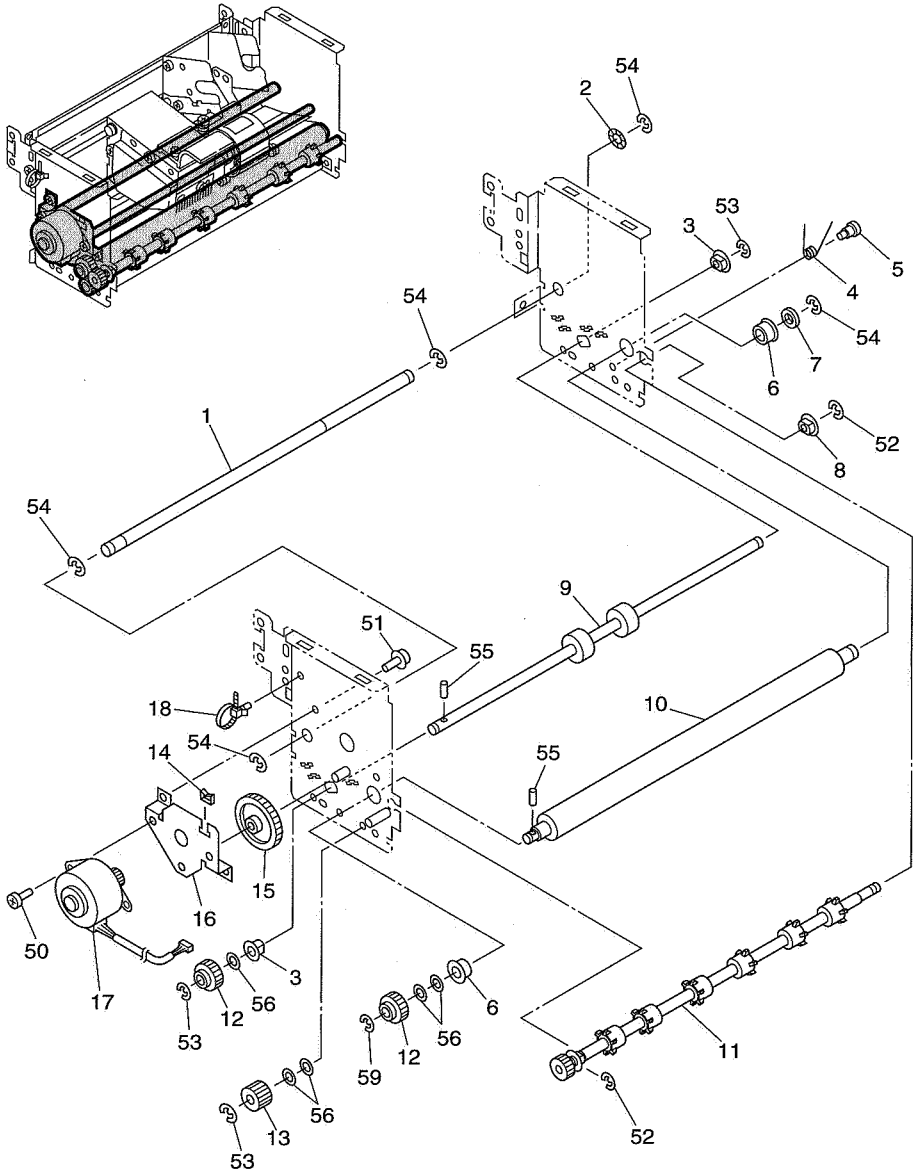

C05

 COPYRIGHT©1999 CANON ELECTRONICS INC. CANON ED500/ED600 REV.0 NOV. 1999 PRINTED IN JAPAN (IMPRIME AU JAPON)

FIGURE & KEY NO.	PARTS NUMBER	RANK	Q'TY	DESCRIPTION	REMARKS
300- 1	MA2-5249-000	N	1	SHAFT, GUIDE ガイド ジク	
2	X71-9774-000		1	WAHER, WAVE ナミ ワッシャ	
3	FS1-1205-000		2	BUSHING ジクウケ	
4	MA2-5284-000		1	SPRING, TORSION, GRANDING アース ヨウ ネジリ コイルバネ	
5	FS1-9009-000		1	TWO-STEP SCREW, M3 ダン ビス	
6	XG9-0211-000		2	BALL BEARING フランジツキ ベアリング	
7	XZ9-0380-000		1	SPACER, φ 8.0x4 スペーサ	
8	FS5-1005-000		1	BUSHING スベリ ジクウケ	
9	MA2-5257-000		1	ROLLER, FEEDER ハンソウ ローラ	
10	MA2-5258-000		1	ROLLER, PLATEN プラテン ローラ	
11	MF1-3833-000		1	ROLLER, DELIVERY ハイシ ローラ	
12	FS2-0605-000		2	GEAR, 30T ニュウリョク ギア	
13	MS1-0864-000		1	GEAR, FEED ADJUSTING B オクリ チョウセイ ギア B	
14	WT2-5056-000		1	CLIP, CABLE エッジ サドル	
15	MS1-0967-000		1	GEAR, FEED IDLE ハンソウ アイドラ ギア	
16	MA2-5261-000	N	1	MOUNT, MOTOR モータ キダイ	
17	MF1-3333-000		1	MOTOR, DC 7W (FEEDER) キョウツウ モータ (ハンソウ)	
18	WT2-0365-000		1	CLIP, CABLE ツノツキ タバセン オサエ	
50	XB1-2300-609		2	SCREW, BH M3x6 バインド ネジ	
51	XB6-7300-609		2	SCREW, TP M3x6 TPネジ	
52	XD2-1100-322		2	RING, E φ 3.2 Eガタ トメワ	
53	XD2-1100-502		4	RING, E φ 5.0 Eガタ トメワ	
54	XD2-1100-642		5	RING, E φ 6.4 Eガタ トメワ	
55	XD3-2160-102		2	PIN, DOWEL φ 1.6x10 ヘイコウ ピン	
56	XD1-1106-219		5	SHIM φ 6.2x1.0 ヒョウジュン ワッシャ	

C06

COPYRIGHT©1999 CANON ELECTRONICS INC. CANON ED500/ED600 REV.0 NOV. 1999 PRINTED IN JAPAN (IMPRIME AU JAPON)

FIGURE 400 STAMP ASSEMBLY
押印部

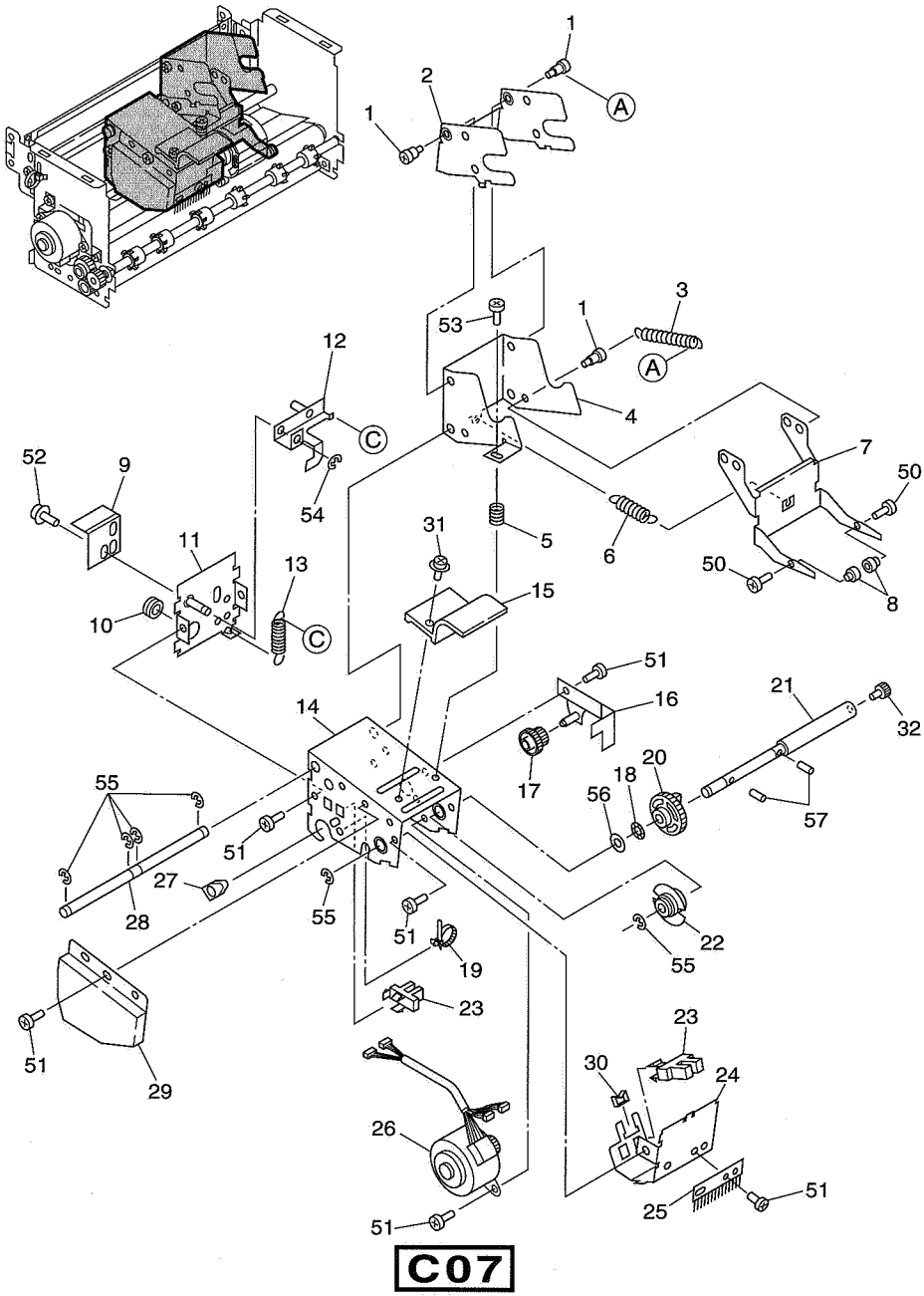

C07

 COPYRIGHT©1999 CANON ELECTRONICS INC. CANON ED500/ED600 REV.0 NOV. 1999 PRINTED IN JAPAN (IMPRIME AU JAPON)

FIGURE & KEY NO.	PARTS NUMBER	RANK	Q'TY	DESCRIPTION	REMARKS
400- 1	FS1-9009-000		3	TWO-STEP SCREW, M3 ダン ビス	
2	MA2-4039-000	N	1	GUIDE, INK ROLLER インク ローラ ガイド	
3	MS1-2395-000		1	SPRING, TENSION, ROLLER インク ローラ シジ バネ	
4	MA2-4038-000	N	1	MOUNT, INK ROLLER インク ローラ キダイ	
5	MS1-2328-000		1	SPRING,COMPRESSION, ROLLER インク ローラ カアツ バネ	
6	MS1-2396-000		1	SPRING, TENSION, BEARING アシスト ローラ シジ バネ	
7	MA2-5250-000	N	1	MOUNT, ASSIST BEARING アシスト ローラ シャーシ	
8	MF1-3461-000	N	2	SHAFT, FEEDER ROLLER ハンソウ ローラ ジク	
9	MF1-3829-000	N	1	PLATE, STOPPER ストッパ キダイ	
10	WT2-5189-000		1	BUSHING ワンタッチ ブッシュ	
11	MF1-3827-000	N	1	PLATE, HOUSING REAR ハウジング セイタ	
12	MF1-3830-000	N	1	PLATE, SUPPORT ARM シジ アーム	
13	MS1-2394-000		1	SPRING, TENSION, STAMP オウイン ブ シジ バネ	
14	MF1-3848-000	N	1	HOUSING, ENDORSER エンドーサ ハウジング	
15	MA2-2668-000	N	1	KNOB, GREEN ミドリ イロ ツマミ 2	
16	MF1-3828-020	N	1	PLATE, GEAR COVER ギア カバー	
17	MS1-0966-000		1	GEAR, REDUCTION DRIVE クドウ ゲンソク ギア	
18	X71-9773-000		1	WASHER, WAVE ナミ ワッシャ	
19	WT2-0365-000		1	CLIP, CABLE ツノツキ タバセン オサエ	
20	MS1-0965-000		1	GEAR, DIE DRUM DRIVE ダイ ドラム クドウ ギア	
21	MA2-5246-020	N	1	SHAFT, DRUM ドラム ジク	
22	MA2-5247-000	N	1	PLATE, ENCODER, DIE DRUM ダイ ドラム エンコーダ	
23	WG8-5382-000		2	PHOTO INTERRUPTER フォトセンサ	
24	MA2-5239-000	N	1	PLATE, SENSOR COVER センサ トリツケ カバー	
25	RB1-6203-000	N	1	BRUSH, STATIC ELIMINATOR TR ジョデン ブラシ	
26	MG1-2921-000		1	MOTOR ASSEMBLY, DC 7W ギアツキ オウイン モータ ユニット	
27	MA2-5248-000		2	BUSHING ハウジング ジクウケ	
28	MA2-5245-020	N	1	SHAFT, INK ROLLER インクロール ジク	
29	MA2-5279-000	N	1	PLATE, HOUSING COVER ハウジング カバー	
30	WT2-5056-000		1	CLIP, CABLE エッジ サドル	
31	XA9-0397-000		1	SCREW, TP M3x6 TP ネジ	
32	XA9-0964-000		1	SCREW, KNOB M4x8 ツマミツキ ネジ	
50	XB1-2200-506		2	SCREW, BH M2x5 バインド ネジ	
51	XB1-2300-409		8	SCREW, BH M3x4 バインド ネジ	
52	XB6-7300-609		1	SCREW, TP M3x6 TP ネジ	

C08

COPYRIGHT©1999 CANON ELECTRONICS INC. CANON ED500/ED600 REV.0 NOV. 1999 PRINTED IN JAPAN (IMPRIME AU JAPON)

FIGURE & KEY NO.	PARTS NUMBER	RANK	Q'TY	DESCRIPTION	REMARKS
400- 53	XB1-2301-609		1	SCREW, BH M3x16 バインド ネジ	
54	XD2-1100-322		1	RING, E φ3.2 Eガタ トメワ	
55	XD2-1100-502		5	RING, E φ5.0 Eガタ トメワ	
56	XD1-1106-223		1	SHIM φ6.2x0.3 ヒョウジュン ワッシャ	
57	XD3-2200-102		2	PIN, DOWEL φ2.0x10 ヘイコウ ピン	

C09

 COPYRIGHT©1999 CANON ELECTRONICS INC. CANON ED500/ED600 REV.0 NOV 1999 PRINTED IN JAPAN (IMPRIME AU JAPON)

FIGURE 500 DIE DRUM ASSEMBLY
ダイドラム部（B110）

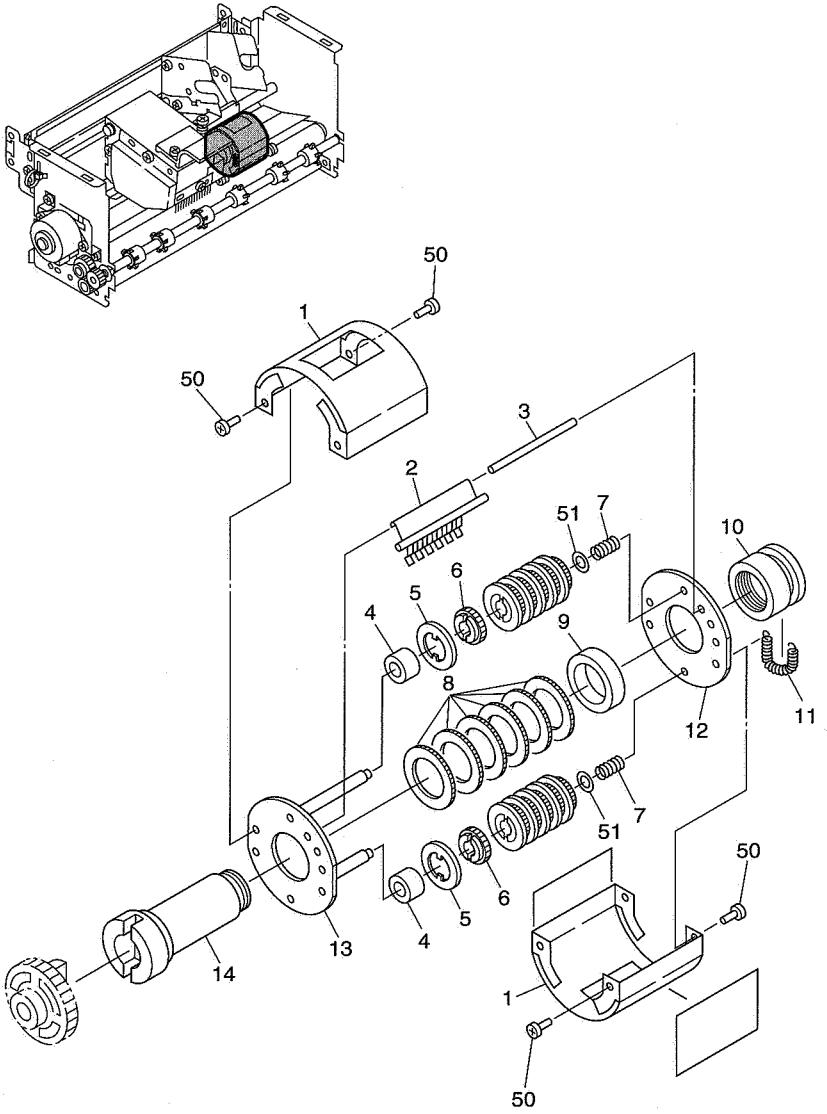

C10

 COPYRIGHT©1999 CANON ELECTRONICS INC. CANON ED500/ED600 REV.0 NOV. 1999 PRINTED IN JAPAN (IMPRIME AU JAPON)

FIGURE & KEY NO.	PARTS NUMBER	RANK	Q'TY	DESCRIPTION	REMARKS
500- 1	MA1-4883-020		2	PLATE, STAMP オウインバン ハリツケ イタ	
2	MA1-4872-000	N	1	SPRING, PLATE オサエ バネ	
3	MA1-4874-000	N	1	SHAFT, PLATE SPRING イタバネ ヨウ ジク	
4	MA1-4878-000	N	2	COLLAR カラー	
5	MA1-4871-030	N	12	RING, STAMP, BROWN モジ ワク	
6	MA2-2056-020		12	GEAR, SET-RING, LIGHT BLUE モジワ トリツケ ハグルマ	
7	MS1-2334-000		2	SPRING, COMPRESSION アッシュク バネ	
8	MA1-4873-000		6	GEAR ヒラ ハグルマ	
9	MA1-4877-000	N	1	COLLAR カラー	
10	MA1-4880-000	N	1	HOLDER ホルダ	
11	MA1-4882-000	N	1	SPRING, CLICK クリック ヨウ スプリング	
12	MA1-4875-000	N	1	COVER ソク バン	
13	MF1-0942-000	N	1	PLATE, SIDE ソク バン	
14	MA1-4881-000	N	1	SHAFT, MAIN メイン シャフト	
50	XB1-2300-409		8	SCREW, BH M3x4 バインド ネジ	
51	XD1-1104-125		2	SHIM, ϕ 4.1x0.5 ヒョウジュン ワッシャ	

COPYRIGHT©1999 CANON ELECTRONICS INC. CANON ED500/ED600 REV.0 NOV. 1999 PRINTED IN JAPAN (IMPRIME AU JAPON)

NUMERICAL INDEX
部品索引表

PARTS NO.	FIGURE & KEY NUMBER	Q'TY	PARTS NO.	FIGURE & KEY NUMBER	Q'TY	PARTS NO.	FIGURE & KEY NUMBER	Q'TY
FS1-1205-000	300-03	2	MA2-5350-000	100-06	1	RH2-5145-020	100-04	1
FS1-9009-000	300-05	1						
↓	400-01	3	MF1-0942-000	500-13	1	WG8-5382-000	400-23	2
			MF1-3333-000	300-17	1			
FS2-0605-000	300-12	2	MF1-3461-000	400-08	2	WR8-0001-000	100-15	1
			MF1-3827-000	400-11	1			
FS5-1005-000	300-08	1	MF1-3828-020	400-16	1	WT2-0136-000	200-14	2
			MF1-3829-000	400-09	1	WT2-0365-000	200-03	2
MA1-4871-030	500-05	12	MF1-3830-000	400-12	1	↓	300-18	1
MA1-4872-000	500-02	1	MF1-3831-000	200-15	1	↓	400-19	1
MA1-4873-000	500-08	6	MF1-3832-000	200-05	1	WT2-5056-000	300-14	1
MA1-4874-000	500-03	1	MF1-3833-000	300-11	1	↓	400-30	1
MA1-4875-000	500-12	1	MF1-3834-000	100-08	1	WT2-5189-000	400-10	1
MA1-4877-000	500-09	1	MF1-3836-000	100-11	1			
MA1-4878-000	500-04	2	MF1-3847-020	200-12	1	X71-9773-000	400-18	1
MA1-4880-000	500-10	1	MF1-3848-000	400-14	1	X71-9774-000	300-02	1
MA1-4881-000	500-14	1	MF1-3849-000	100-08	1			
MA1-4882-000	500-11	1				XA9-0397-000	400-31	1
MA1-4883-020	500-01	2	MG1-2890-000	100-01	1	XA9-0964-000	400-32	1
			MG1-2894-000	200-04	1			
MA2-2056-020	500-06	12	MG1-2895-000	100-12	1	XB1-2200-506	400-50	2
MA2-2668-000	400-15	1	MG1-2896-020	200-01	1	XB1-2300-407	100-53	2
MA2-4038-000	400-04	1	MG1-2898-000	100-18	1	XB1-2300-409	200-51	2
MA2-4039-000	400-02	1	MG1-2904-000	200-02	1	↓	400-51	8
MA2-5239-000	400-24	1	MG1-2913-000	100-16	1	↓	500-50	8
MA2-5245-020	400-28	1	MG1-2914-000	100-16	1	XB1-2300-606	100-50	6
MA2-5246-020	400-21	1	MG1-2915-000	100-16	1	↓	200-50	4
MA2-5247-000	400-22	1	MG1-2921-000	400-26	1	XB1-2300-609	300-50	2
MA2-5248-000	400-27	2				XB1-2301-609	400-53	1
MA2-5249-000	300-01	1	MH3-8006-000	100-02	1	XB1-2400-409	200-52	2
MA2-5250-000	400-07	1						
MA2-5251-000	200-06	1	MS1-0864-000	300-13	1	XB4-7300-809	100-51	2
MA2-5254-000	200-10	1	MS1-0965-000	400-20	1			
MA2-5255-000	200-07	1	MS1-0966-000	400-17	1	XB6-7300-609	100-52	2
MA2-5256-000	200-11	1	MS1-0967-000	300-15	1	↓	200-53	4
MA2-5257-000	300-09	1	MS1-2328-000	400-05	1	↓	300-51	2
MA2-5258-000	300-10	1	MS1-2334-000	500-07	2	↓	400-52	1
MA2-5261-000	300-16	1	MS1-2394-000	400-13	1			
MA2-5264-000	100-13	1	MS1-2395-000	400-03	1	XD1-1104-125	500-51	2
MA2-5265-000	200-08	1	MS1-2396-000	400-06	1	XD1-1106-219	300-56	5
MA2-5266-020	100-10	2	MS1-6088-000	200-09	2	XD1-1106-223	400-56	1
MA2-5269-000	100-09	1						
MA2-5271-000	100-14	1	RB1-3001-000	200-13	2	XD2-1100-322	300-52	2
MA2-5272-000	100-07	1	RB1-6203-000	400-25	1	↓	400-54	1
MA2-5276-000	100-17	1				XD2-1100-402	200-54	2
MA2-5279-000	400-29	1	RH2-5014-030	100-05	1	XD2-1100-502	300-53	4
MA2-5284-000	300-04	1	RH2-5096-000	100-03	1	↓	400-55	5

D01

COPYRIGHT©1999 CANON ELECTRONICS INC. CANON ED500/ED600 REV.0 NOV. 1999 PRINTED IN JAPAN (IMPRIME AU JAPON)

PARTS NO.	FIGURE & KEY NUMBER	Q'TY	PARTS NO.	FIGURE & KEY NUMBER	Q'TY	PARTS NO.	FIGURE & KEY NUMBER	Q'TY
XD2-1100-642	300-54	5						
XD3-2160-102	300-55	2						
XD3-2200-102	400-57	2						
XG9-0211-000	300-06	2						
XZ9-0380-000	300-07	1						

COPYRIGHT©1999 CANON ELECTRONICS INC. CANON ED500/ED600 REV.0 NOV. 1999 PRINTED IN JAPAN (IMPRIME AU JAPON)

Endorser ED600

[M18-0631]

E01

COPYRIGHT©1999 CANON ELECTRONICS INC. CANON ED500/ED600 REV.0 NOV. 1999 PRINTED IN JAPAN (IMPRIME AU JAPON)

FIGURE A ASSEMBLY LOCATION DIAGRAM
主要部品配置図

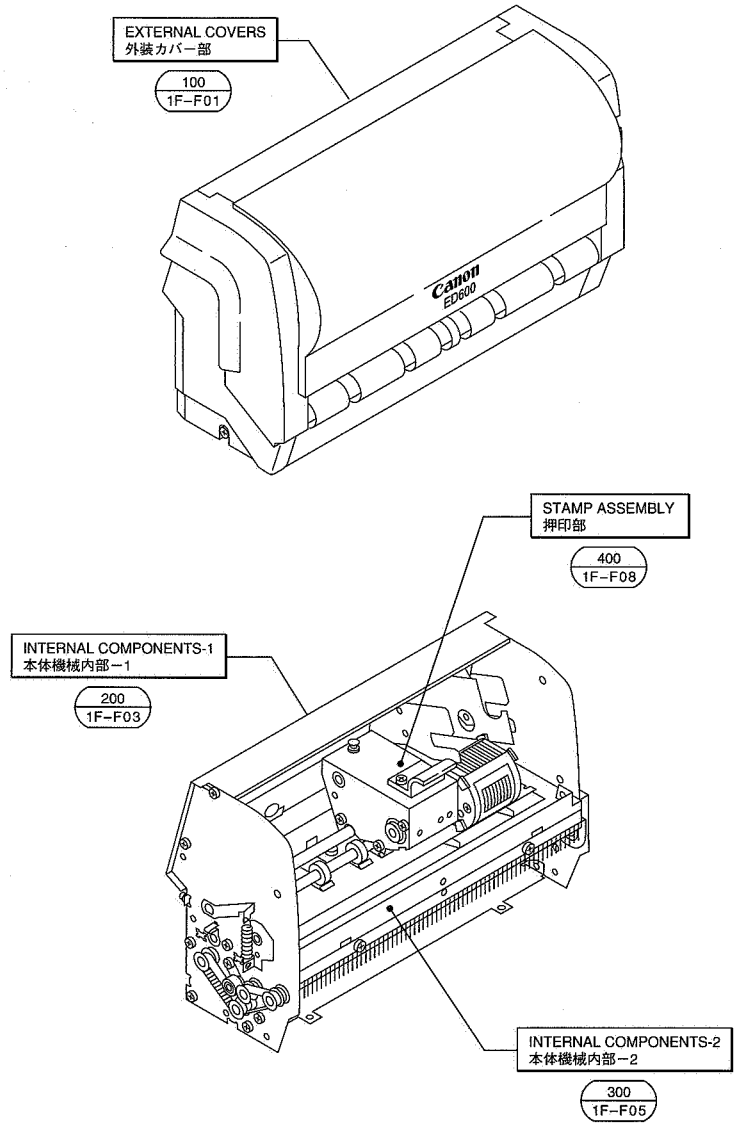

E02

COPYRIGHT©1999 CANON ELECTRONICS INC. CANON ED500/ED600 REV.0 NOV. 1999 PRINTED IN JAPAN (IMPRIME AU JAPON)

FIGURE B ILLUSTRATION INDEX
イラスト索引

FIGURE 100 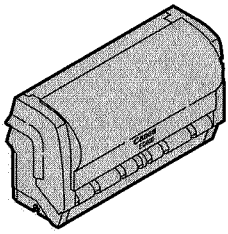 1F-F01	FIGURE 200 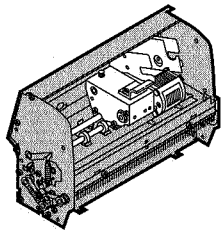 1F-F03	FIGURE 300 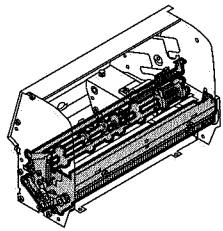 1F-F05
FIGURE 400 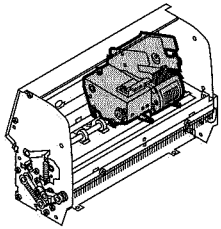 1F-F08		

E03

COPYRIGHT©1999 CANON ELECTRONICS INC. CANON ED500/ED600 REV.0 NOV. 1999 PRINTED IN JAPAN (IMPRIME AU JAPON)

FIGURE 100 EXTERNAL COVERS
外装カバー部

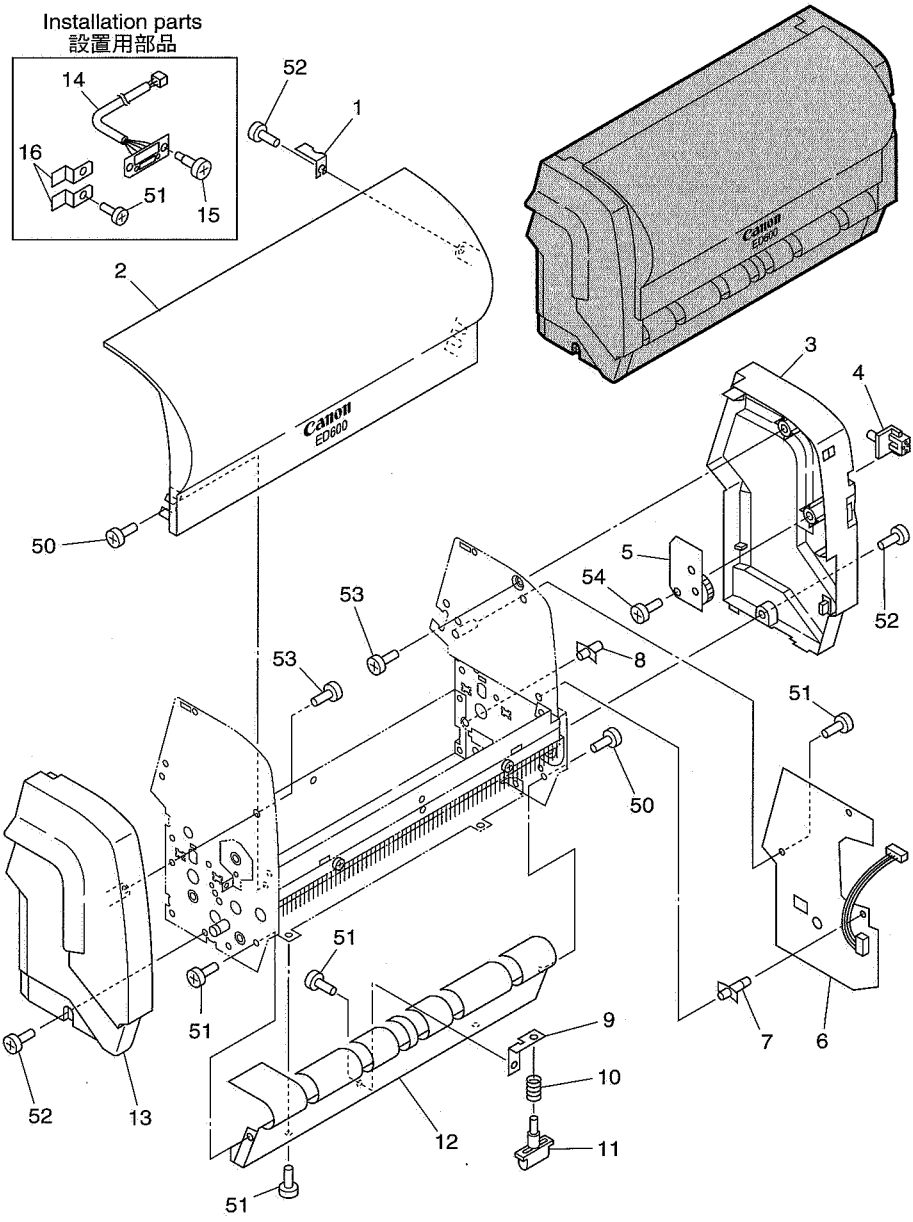

F01

 COPYRIGHT©1999 CANON ELECTRONICS INC. CANON ED500/ED600 REV.0 NOV. 1999 PRINTED IN JAPAN (IMPRIME AU JAPON)

FIGURE & KEY NO.	PARTS NUMBER	RANK	Q'TY	DESCRIPTION	REMARKS
100- 1	MA2-5853-000	N	1	LEVER, OPEN/CLOSE SENSING カイヘイケンチレバー	
2	MA2-5873-000		1	COVER, FRONT フロントカバー	
3	MA2-5872-000		1	COVER, RIGHT ミギカバー	
4	MA2-5874-000	N	1	BUTTON, OPERATION ソウサブキー	
5	MG1-3012-000		1	PCB ASSEMBLY, OPERATION ソウサブ カイロキバン	
6	MG1-3005-000		1	PCB ASSEMBLY, CPU, ED6 ED6-DCON カイロキバン	
7	VT2-0001-010		2	SUPPORT, PCB ロツキング サポート	
8	VT2-0002-004		2	SPACER, SUPPORT ロツキング スペーサー	
9	MA2-5876-000	N	1	PLATE, STOPPER ストツパーステー	
10	MS1-2419-000		1	SPRING, COMPRESSION, STOPPER ヨウシストツパー カアツバネ	
11	MA2-5875-000	N	1	STOPPER, DOCUMENT ヨウシ ストツパー	
12	MF1-4065-000		1	COVER, FRONT BOTTOM ハイメンシヤーシ	
13	MA2-5871-000		1	COVER, LEFT ヒダリカバー	
14	MG1-3015-000		1	CABLE ASSEMBLY, INSTALL セツチカーブル	
15	RS5-9141-000		2	SCREW, STEP, M3 ダンビス M3	
16	MA2-5375-000		2	SPRING, PLATE. GRONDING アースバネ	
50	XB1-2300-309		4	SCREW, BH M3x3 バインドビス M3 L3	
51	XB1-2300-407		7	SCREW, BH M3x4 バインドビス M3 L4	
52	XB1-2300-607		2	SCREW, BH M3x6 バインドビス M3 L6	
53	XB4-7300-607		3	SCREW, TAP, BH M3x6 タッピングビス M3 L6	
54	XB4-7300-809		2	SCREW, TAP, BH M3x8 タッピングビス M3 L8	

F02

COPYRIGHT©1999 CANON ELECTRONICS INC. CANON ED500/ED600 REV.0 NOV. 1999 PRINTED IN JAPAN (IMPRIME AU JAPON)

FIGURE 200 INTERNAL COMPONENTS-1
本体機械内部－1

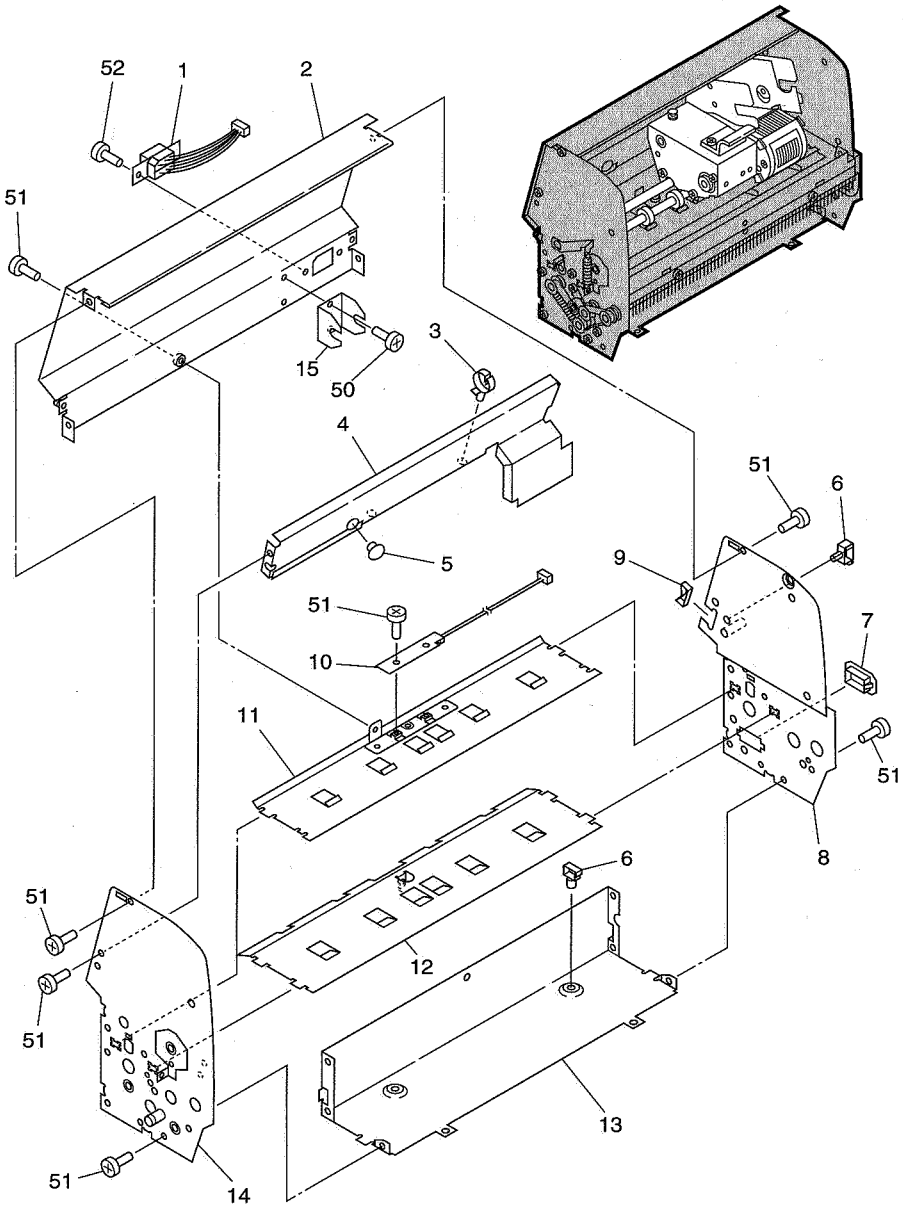

F03

 COPYRIGHT©1999 CANON ELECTRONICS INC. CANON ED500/ED600 REV.0 NOV. 1999 PRINTED IN JAPAN (IMPRIME AU JAPON)

FIGURE & KEY NO.	PARTS NUMBER	RANK	Q'TY	DESCRIPTION	REMARKS
200- 1	MG1-3008-000		1	CABLE ASSEMBLY, ED6 ED6 チユウケイケーブル	
2	MF1-4064-000	N	1	MOUNT PLATE, REAR SIDE ハイメンシャーシ	
4	MA2-5869-000	N	1	CROSSMEMBER, GUIDE ガイドステー	
5	XZ9-0439-000		1	PLUG, HOLE ホールプラグ	
6	WT2-5089-000		3	CLAMP, CABLE タバセンオサエ	
7	WT2-5062-000		1	BUSHING, SQUARE スクウエアブッシユ	
8	MF1-4063-000	N	1	PLATE, RIGHT SIDE ミギソクバン	
9	WT2-0136-000		1	CLIP, CABLE エツジサドル	
10	MG1-3007-000		1	PCB ASSEMBLY, DOCUMENT SENSOR カミセンサー カイロキバン	
11	MA2-5868-000	N	1	PLATE, UPPER GUIDE ウエガイドバン	
12	MA2-5867-000	N	1	PLATE, BOTTOM GUIDE シタガイドバン	
13	MA2-5865-000	N	1	MOUNT PLATE, BOTTOM SIDE ソコメン シヤーシ	
14	MF1-4061-000	N	1	PLATE, LEFT SIDE ヒダリソクバン	
15	MA2-5884-000		1	PLATE, SUPPORT, GUIDE SHAFT ガイドジクオサエイタ	
50	XB1-2300-309		2	SCREW, BH M3x3 バインドビス M3 L3	
51	XB1-2300-407		15	SCREW, BH M3x4 バインドビス M3 L4	
52	XB1-2300-809		2	SCREW, BH M3x8 バインドビス M3 L8	

COPYRIGHT©1999 CANON ELECTRONICS INC. CANON ED500/ED600 REV.0 NOV. 1999 PRINTED IN JAPAN (IMPRIME AU JAPON)

FIGURE 300 INTERNAL COMPONENTS-2
本体機械内部－2

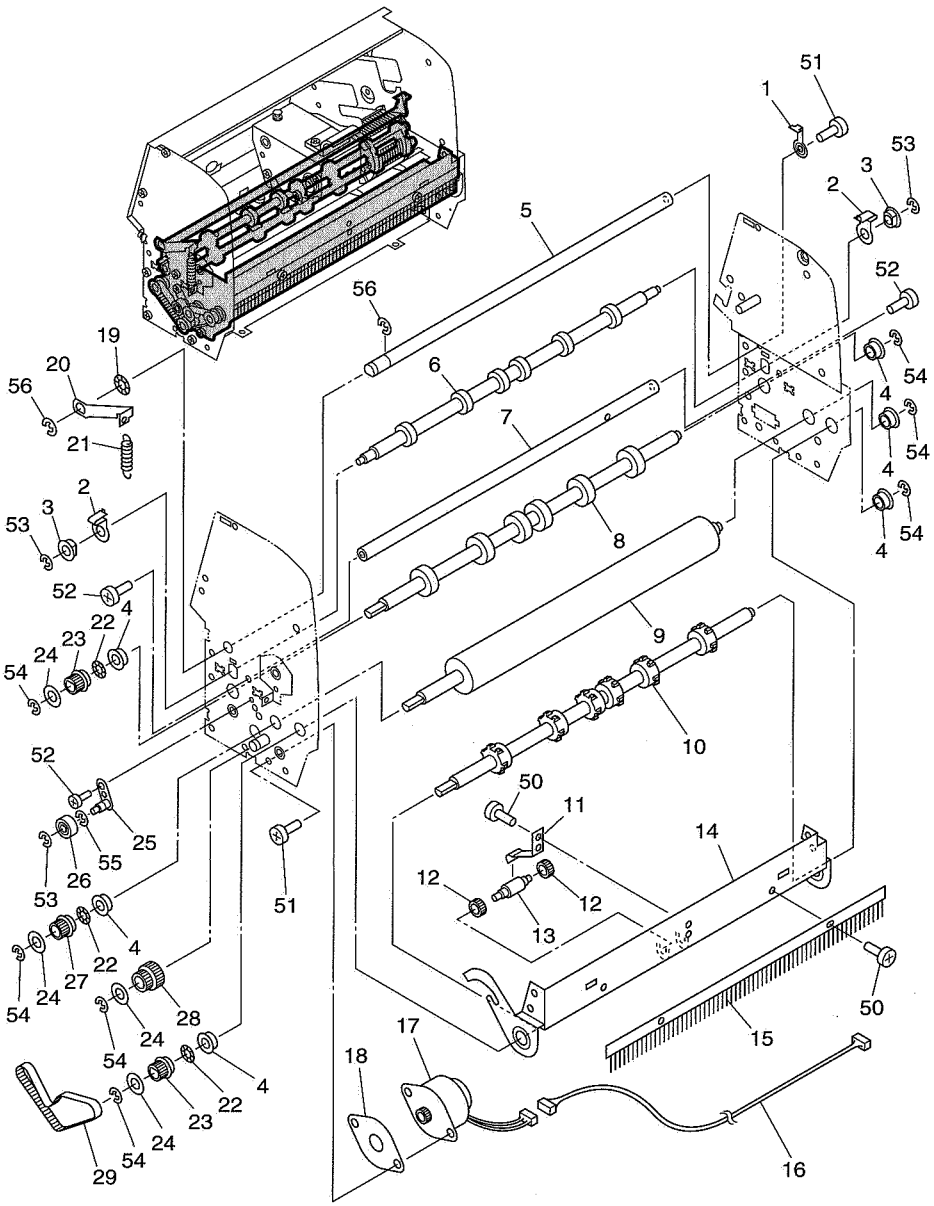

F05

 COPYRIGHT©1999 CANON ELECTRONICS INC. CANON ED500/ED600 REV.0 NOV. 1999 PRINTED IN JAPAN (IMPRIME AU JAPON)

FIGURE & KEY NO.	PARTS NUMBER	RANK	Q'TY	DESCRIPTION	REMARKS
300- 1	MA2-5852-000	N	1	ARM, SENSOR センサーアーム	
2	MA2-5859-000		2	SPRING, PLATE, FOLLOWER ROLLER ジユウドウローラバネ	
3	XG3-6010-305		2	BEARING, BALL, FLANGE フランジツキ ベアリング	
4	XG3-8012-355		6	BEARING, BALL, FLANGE フランジツキ ベアリング	
5	MA2-5850-000	N	1	SHAFT, GUIDE ガイドジク	
6	MA2-5857-000		1	ROLLER, FOLLOWER ジユウドウローラ	
7	MA2-5858-000	N	1	SHAFT, ADJUSTMENT GUIDE チヨウセイ ガイドジク	
8	MA2-5856-000		1	ROLLER, FEED ハンソウローラ	
9	MA2-5854-000		1	ROLLER, PLATEN プラテンローラ	
10	MA2-5855-000		1	ROLLER, DELIVERY ハイシローラ	
11	MA2-5878-000		1	SPRING, PLATE, TENSION ROLLER テンションローラバネ	
12	MA2-5880-000		2	ROLLER, TENSION テンションローラ	
13	MA2-5879-000	N	1	SHAFT, ROLLER SUPPORT ローラ シジク	
14	MA2-5870-000	N	1	PLATE, COVER HINGE カバーヒンジ	
15	MA2-5877-000	N	1	BRUSH, ELIMINATOR ジヨデンブラシ	
16	MG1-3009-000		1	CABLE ASSEMBLY, FEEDER MOTOR モータ タバセン	
17	RH7-1278-000		1	MOTOR, STEPPING ステツピングモーター	
18	MA2-5860-000	N	1	SHEET, HEATSINK ホウネツシート	
19	X71-9774-000		1	WASHER, WAVE 8.5 ナミ ワッシャ	
20	MA2-5851-000	N	1	ARM, STOPPER ストツプアーム	
21	MS1-2421-000		1	SPRING, TENSION, STAMP SUPPORT オウインブ シジバネ	
22	X71-9773-000		3	WASHER, WAVE 6.4 ナミ ワッシャ	
23	MS1-3150-000		2	PULLEY, FEEDER ハンソウ プーリ	
24	MA2-4530-000	N	4	FLANGE フランジ	
25	MF1-4062-000	N	1	PLATE, TENSIONER ADJUSTING テンショナー チヨウセイバン	
26	XG9-0262-000		1	BEARING, BALL ツバナシベアリング	
27	MS1-3151-000		1	PULLEY, PLATEN プラテン プーリ	
28	MS1-3149-000		1	PULLEY, FEEDER GEAR ハンソウギア プーリ	
29	XF2-1110-530		1	BELT, TIMING 105T タイミングベルト	
50	XB1-2300-309		3	SCREW, BH M3x3 バインドビス M3L3	
51	XB1-2300-407		3	SCREW, BH M3x4 バインドビス M3L4	
52	XB1-2300-607		3	SCREW, BH M3x6 バインドビス M3L6	
53	XD2-1100-322		3	RING, E 3.2 Eガタ トメワ 3.2	
54	XD2-1100-402		7	RING, E 4.0 Eガタ トメワ 4.0	
55	XD2-1100-502		1	RING, E 5.0 Eガタ トメワ 5.0	

COPYRIGHT©1999 CANON ELECTRONICS INC. CANON ED500/ED600 REV.0 NOV. 1999 PRINTED IN JAPAN (IMPRIME AU JAPON)

FIGURE & KEY NO.	PARTS NUMBER	RANK	Q'TY	DESCRIPTION	REMARKS
300– 56	XD2–1100–642		2	RING, E 6.4 Eガタ トメワ 6.4	

F07

 COPYRIGHT©1999 CANON ELECTRONICS INC. CANON ED500/ED600 REV.0 NOV 1999 PRINTED IN JAPAN (IMPRIME AU JAPON)

FIGURE 400 STAMP ASSEMBLY 押印部

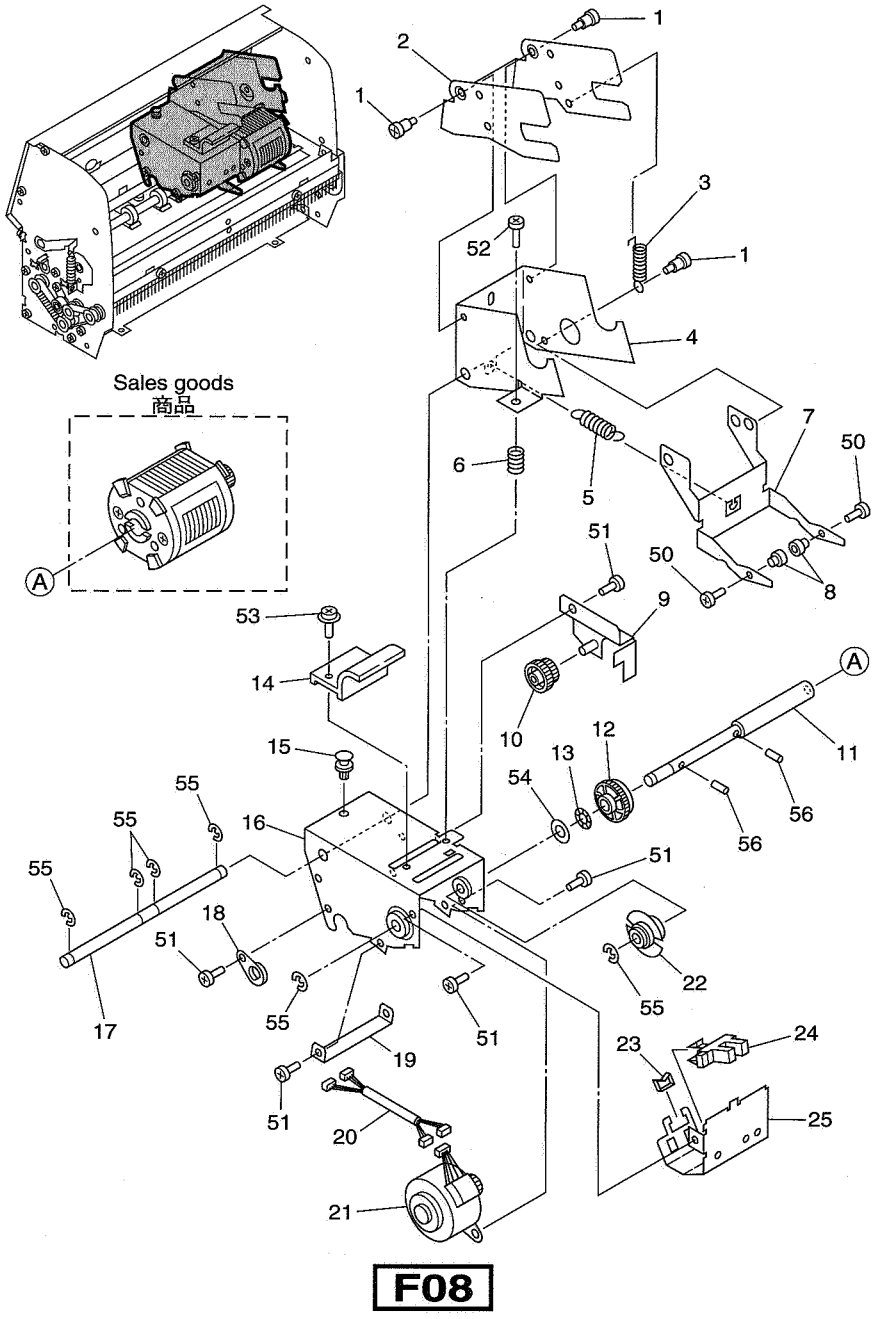

 COPYRIGHT©1999 CANON ELECTRONICS INC. CANON ED500/ED600 REV.0 NOV. 1999 PRINTED IN JAPAN (IMPRIME AU JAPON)

FIGURE & KEY NO.	PARTS NUMBER	RANK	Q'TY	DESCRIPTION	REMARKS
400- 1	FS1-9009-000		3	SCREW, TWO-STEP M3 ダンビス M3	
2	MA2-5847-000	N	1	GUIDE, INK ROLLER インクローラガイド	
3	MS1-2422-000		1	SPRING, TENSION, ROLLER インクローラ シジバネ	
4	MA2-5846-000	N	1	MOUNT, INK ROLLER インクローラキダイ	
5	MS1-2396-000		1	SPRING, TENSION, BEARING アシストローラ シジバネ	
6	MS1-2420-000		1	SPRING, COMPRESSION, ROLLER インクローラ カアツバネ	
7	MA2-5845-000	N	1	MOUNT, ASSIST BEARING アシストローラシヤーシ	
8	MF1-3461-000	N	2	SHAFT, FEEDER ROLLER ハンソウローラジク	
9	MF1-4059-000	N	1	PLATE, GEAR COVER ギアカバー	
10	MS1-0998-000		1	GEAR, REDUCTION DRIVE クドウゲンソク ギア	
11	MA2-5841-000	N	1	SHAFT, DRUM ドラムジク	
12	MS1-0997-000		1	GEAR, DIE DRUM DRIVE ダイドラム クドウギア	
13	X71-9773-000		1	WASHER, WAVE 6.4 ナミ ワッシャ	
14	MA2-2668-000	N	1	KNOB, GREEN ミドリイロ ツマミ 2	
15	XD9-0193-000		1	REVET, PLASTIC プラスティ リベット	
16	MF1-4058-000	N	1	HOUSING, ENDORSER エンドーサハウジング	
17	MA2-5245-020	N	1	SHAFT, INK ROLLER インクロールジク	
18	MA2-5842-000	N	2	BUSHING, ENDORSER HOUSING ハウジング ジクウケ	
19	MF1-4060-000	N	1	PLATE, STOPPER ストツパーキダイ	
20	MG1-3010-000		1	CABLE ASSEMBLY, STAMP オウイン ケーブル	
21	RH7-1278-000		1	MOTOR, STEPPING ステツピングモーター	
22	MA2-5247-000	N	1	PLATE, ENCODER, DIE DRUM ダイドラムエンコーダ	
23	WT2-5056-000		1	CLIP, CABLE エツジサドル	
24	FH7-7462-000		1	PHOTO-INTERRUPTER フオトインタラプタ	
25	MA2-5239-000	N	1	PLATE, SENSOR COVER センサートリツケカバー	
50	XB1-2200-506		2	SCREW, BH M2x5 バインドビス M2 L5	
51	XB1-2300-409		6	SCREW, BH M3x4 バインドビス M3 L4	
52	XB1-2302-509		1	SCREW, BH M3x25 バインドビス M3 L25	
53	XB6-7300-607		1	SCREW, TP M3x6 TPビス M3 L6	
54	XD1-1106-223		1	SHIM, 6.2x0.3 ヒヨウジユン ワッシヤ	
55	XD2-1100-502		6	RING, E 5.0 Eガタ トメワ 5.0	
56	XD3-2200-102		2	PIN, DOWEL 2.0x10 ヘイコウピン 2x10	

COPYRIGHT©1999 CANON ELECTRONICS INC. CANON ED500/ED600 REV.0 NOV. 1999 PRINTED IN JAPAN (IMPRIME AU JAPON)

NUMERICAL INDEX
部品索引表

PARTS NO.	FIGURE & KEY NUMBER	Q'TY	PARTS NO.	FIGURE & KEY NUMBER	Q'TY	PARTS NO.	FIGURE & KEY NUMBER	Q'TY
FH7-7462-000	400-24	1	MF1-4061-000	200-14	1	↓	200-51	15
			MF1-4062-000	300-25	1	↓	300-51	3
FS1-9009-000	400-01	3	MF1-4063-000	200-08	1	XB1-2300-409	400-51	6
			MF1-4064-000	200-02	1	XB1-2300-607	100-52	2
MA2-2668-000	400-14	1	MF1-4065-000	100-12	1	↓	300-52	3
MA2-4530-000	300-24	4				XB1-2300-809	200-52	2
MA2-5239-000	400-25	1	MG1-3005-000	100-06	1	XB1-2302-509	400-52	1
MA2-5245-020	400-17	1	MG1-3007-000	200-10	1			
MA2-5247-000	400-22	1	MG1-3008-000	200-01	1	XB4-7300-607	100-53	5
MA2-5375-000	100-16	2	MG1-3009-000	300-16	1			
MA2-5841-000	400-11	1	MG1-3010-000	400-20	1	XB6-7300-607	400-53	1
MA2-5842-000	400-18	2	MG1-3012-000	100-05	1			
MA2-5845-000	400-07	1	MG1-3015-000	100-14	1	XD1-1106-223	400-54	1
MA2-5846-000	400-04	1						
MA2-5847-000	400-02	1	MS1-0997-000	400-12	1	XD2-1100-322	300-53	3
MA2-5850-000	300-05	1	MS1-0998-000	400-10	1	XD2-1100-402	300-54	7
MA2-5851-000	300-20	1	MS1-2396-000	400-05	1	XD2-1100-502	300-55	1
MA2-5852-000	300-01	1	MS1-2419-000	100-10	1	↓	400-55	6
MA2-5853-000	100-01	1	MS1-2420-000	400-06	1	XD2-1100-642	300-56	2
MA2-5854-000	300-09	1	MS1-2421-000	300-21	1			
MA2-5855-000	300-10	1	MS1-2422-000	400-03	1	XD3-2200-102	400-56	2
MA2-5856-000	300-08	1	MS1-3149-000	300-28	1			
MA2-5857-000	300-06	1	MS1-3150-000	300-23	2	XD9-0193-000	400-15	1
MA2-5858-000	300-07	1	MS1-3151-000	300-27	1			
MA2-5859-000	300-02	2				XF2-1110-530	300-29	1
MA2-5860-000	300-18	1	RH7-1278-000	300-17	1			
MA2-5865-000	200-13	1	↓	400-21	1	XG3-6010-305	300-03	2
MA2-5867-000	200-12	1				XG3-8012-355	300-04	6
MA2-5868-000	200-11	1	RS5-9141-000	100-15	2			
MA2-5869-000	200-04	1				XG9-0262-000	300-26	1
MA2-5870-000	300-14	1	VT2-0001-010	100-07	2			
MA2-5871-000	100-13	1	VT2-0002-004	100-08	2	XZ9-0439-000	200-05	1
MA2-5872-000	100-03	1						
MA2-5873-000	100-02	1	WT2-0136-000	200-09	1			
MA2-5874-000	100-04	1	WT2-5056-000	400-23	1			
MA2-5875-000	100-11	1	WT2-5062-000	200-07	1			
MA2-5876-000	100-09	1	WT2-5089-000	200-06	3			
MA2-5877-000	300-15	1						
MA2-5878-000	300-11	1	X71-9773-000	300-22	3			
MA2-5879-000	300-13	1	↓	400-13	1			
MA2-5880-000	300-12	2	X71-9774-000	300-19	1			
MA2-5884-000	200-15	1						
			XB1-2200-506	400-50	2			
MF1-3461-000	400-08	2	XB1-2300-309	100-50	4			
MF1-4058-000	400-16	1	↓	200-50	2			
MF1-4059-000	400-09	1	↓	300-50	3			
MF1-4060-000	400-19	1	XB1-2300-407	100-51	7			

C COPYRIGHT©1999 CANON ELECTRONICS INC. CANON ED500/ED600 REV.0 NOV. 1999 PRINTED IN JAPAN (IMPRIME AU JAPON)

〒369-1892
埼玉県秩父市下影森1 2 4 8 番地
キ ヤ ノ ン 電 子 株 式 会 社
品 質 保 証 部　品 質 推 進 課

1999年　11月　第1版発行

Prepared by
QUALITY ASSURANCE CENTER
CANON ELECTRONICS INC.
Printed in Japan
FIRST EDITION (NOV. 1999)

1248 Shimokagemori, Chichibu-shi, Saitama 369-1892, Japan

G02

COPYRIGHT©1999 CANON ELECTRONICS INC. CANON ED500/ED600 REV.0 NOV. 1999 PRINTED IN JAPAN (IMPRIME AU JAPON)

Canon

この印刷物は古紙を70%含んだ
紙を使用しています。
This publication is printed on
70% reprocessed paper.

G03

X PRINTED IN JAPAN (IMPRIME AU JAPON) 1199TG.600–0