KONICA MINOLTA

SERVICE MANUAL

FIELD SERVICE

bizhub

423/363/283/223

2012.02

KONICA MINOLTA BUSINESS TECHNOLOGIES, INC. Ver. 1.1

FIELD SERVICE TOTAL CONTENTS

SAFETY AND IMPORTANT WARNING ITEMS S-1
IMPORTANT NOTICE S-1
DESCRIPTION ITEMS FOR DANGER, WARNING AND CAUTION S-1
SAFETY WARNINGS S-2
WARNING INDICATIONS ON THE MACHINE S-18
MEASURES TO TAKE IN CASE OF AN ACCIDENT S-20
Composition of the service manual C-1
Notation of the service manual C-2

bizhub 423/363/283/223 Main body

OUTLINE 1
MAINTENANCE..... 15
ADJUSTMENT/SETTING 161
TROUBLESHOOTING..... 569
APPENDIX..... 751

i-Option LK-101 v2/102/103 v2/105

OUTLINE 1
ADJUSTMENT/SETTING 3

FK-508

OUTLINE 1
MAINTENANCE..... 55

DF-621/SP-501

OUTLINE 1
MAINTENANCE..... 5
ADJUSTMENT/SETTING 29

PC-109/PC-208

OUTLINE 1
MAINTENANCE..... 3
ADJUSTMENT/SETTING 23

PC-409

OUTLINE 1
MAINTENANCE..... 3
ADJUSTMENT/SETTING 31

JS-505

OUTLINE 1
MAINTENANCE 3

FS-527

OUTLINE 1
MAINTENANCE 5

PK-517

OUTLINE 1
MAINTENANCE 3
ADJUSTMENT/SETTING 7

SD-509

OUTLINE 1
MAINTENANCE 3
ADJUSTMENT/SETTING 21

JS-603

OUTLINE 1
MAINTENANCE 3

FS-529

OUTLINE 1
MAINTENANCE 3

SAFETY AND IMPORTANT WARNING ITEMS

Read carefully the safety and important warning items described below to understand them before doing service work.

IMPORTANT NOTICE

Because of possible hazards to an inexperienced person servicing this product as well as the risk of damage to the product, KONICA MINOLTA BUSINESS TECHNOLOGIES, INC. (hereafter called the KMBT) strongly recommends that all servicing be performed only by KMBT-trained service technicians.
Changes may have been made to this product to improve its performance after this Service Manual was printed. Accordingly, KMBT does not warrant, either explicitly or implicitly, that the information contained in this service manual is complete and accurate.
The user of this service manual must assume all risks of personal injury and/or damage to the product while servicing the product for which this service manual is intended.
Therefore, this service manual must be carefully read before doing service work both in the course of technical training and even after that, for performing maintenance and control of the product properly.
Keep this service manual also for future service.

DESCRIPTION ITEMS FOR DANGER, WARNING AND CAUTION

In this Service Manual, each of three expressions "⚠ DANGER", "⚠ WARNING", and "⚠ CAUTION" is defined as follows together with a symbol mark to be used in a limited meaning.
When servicing the product, the relevant works (disassembling, reassembling, adjustment, repair, maintenance, etc.) need to be conducted with utmost care.

⚠ **DANGER: Action having a high possibility of suffering death or serious injury**

⚠ **WARNING: Action having a possibility of suffering death or serious injury**

⚠ **CAUTION: Action having a possibility of suffering a slight wound, medium trouble, and property damage**

Symbols used for safety and important warning items are defined as follows:

△ :Precaution when servicing the product.

⃠ :Prohibition when servicing the product.

● :Direction when servicing the product.

SAFETY WARNINGS

[1] MODIFICATIONS NOT AUTHORIZED BY KONICA MINOLTA BUSINESS TECHNOLOGIES, INC.

KONICA MINOLTA brand products are renowned for their high reliability. This reliability is achieved through high-quality design and a solid service network.
Product design is a highly complicated and delicate process where numerous mechanical, physical, and electrical aspects have to be taken into consideration, with the aim of arriving at proper tolerances and safety factors. For this reason, unauthorized modifications involve a high risk of degradation in performance and safety. Such modifications are therefore strictly prohibited. the points listed below are not exhaustive, but they illustrate the reasoning behind this policy.

Prohibited Actions

⚠ DANGER

- Using any cables or power cord not specified by KMBT.

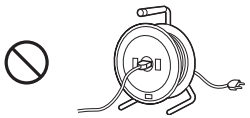

- Using any fuse or thermostat not specified by KMBT. Safety will not be assured, leading to a risk of fire and injury.

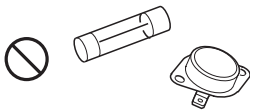

- Disabling fuse functions or bridging fuse terminals with wire, metal clips, solder or similar object.

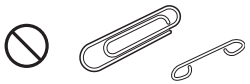

- Disabling relay functions (such as wedging paper between relay contacts).

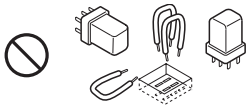

- Disabling safety functions (interlocks, safety circuits, etc.). Safety will not be assured, leading to a risk of fire and injury.

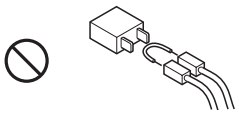

- Making any modification to the product unless instructed by KMBT.

- Using parts not specified by KMBT.

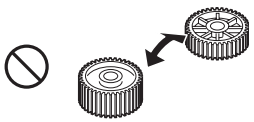

[2] POWER PLUG SELECTION

In some countries or areas, the power plug provided with the product may not fit wall outlet used in the area. In that case, it is obligation of customer engineer (hereafter called the CE) to attach appropriate power plug or power cord set in order to connect the product to the supply.

Power Cord Set or Power Plug

⚠ WARNING

- Use power supply cord set which meets the following criteria:
  - provided with a plug having configuration intended for the connection to wall outlet appropriate for the product's rated voltage and current, and
  - the plug has pin/terminal(s) for grounding, and
  - provided with three-conductor cable having enough current capacity, and
  - the cord set meets regulatory requirements for the area.

  Use of inadequate cord set leads to fire or electric shock.

- Attach power plug which meets the following criteria:
  - having configuration intended for the connection to wall outlet appropriate for the product's rated voltage and current, and
  - the plug has pin/terminal(s) for grounding, and
  - meets regulatory requirements for the area.

  Use of inadequate cord set leads to the product connecting to inadequate power supply (voltage, current capacity, grounding), and may result in fire or electric shock.

- Conductors in the power cable must be connected to terminals of the plug according to the following order:
  - •Black or Brown:L (line)
  - •White or Light Blue:N (neutral)
  - •Green/Yellow:PE (earth)

  Wrong connection may cancel safeguards within the product, and results in fire or electric shock.

[3] CHECKPOINTS WHEN PERFORMING ON-SITE SERVICE

KONICA MINOLTA brand products are extensively tested before shipping, to ensure that all applicable safety standards are met, in order to protect the customer and customer engineer (hereafter called the CE) from the risk of injury. However, in daily use, any electrical equipment may be subject to parts wear and eventual failure. In order to maintain safety and reliability, the CE must perform regular safety checks.

1. Power Supply

Connection to Power Supply

⚠ WARNING

- Check that mains voltage is as specified.

  Connection to wrong voltage supply may result in fire or electric shock.

- Connect power plug directly into wall outlet having same configuration as the plug.

  Use of an adapter leads to the product connecting to inadequate power supply (voltage, current capacity, grounding), and may result in fire or electric shock.

  If proper wall outlet is not available, advice the customer to contact qualified electrician for the installation.

- Plug the power cord into the dedicated wall outlet with a capacity greater than the maximum power consumption.

  If excessive current flows in the wall outlet, fire may result.

- If two or more power cords can be plugged into the wall outlet, the total load must not exceed the rating of the wall outlet.

  If excessive current flows in the wall outlet, fire may result.

- Make sure the power cord is plugged in the wall outlet securely.

  Contact problems may lead to increased resistance, overheating, and the risk of fire.

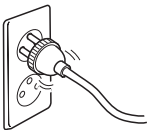

- Check whether the product is grounded properly.

  If current leakage occurs in an ungrounded product, you may suffer electric shock while operating the product.

  Connect power plug to grounded wall outlet.

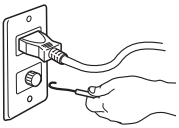

Power Plug and Cord

⚠ WARNING

- When using the power cord set (inlet type) that came with this product, make sure the connector is securely inserted in the inlet of the product.
  When securing measure is provided, secure the cord with the fixture properly.
  If the power cord (inlet type) is not connected to the product securely, a contact problem may lead to increased resistance, overheating, and risk of fire.

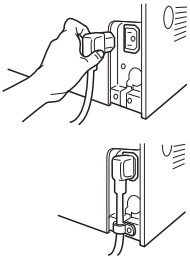

- Check whether the power cord is not stepped on or pinched by a table and so on.
  Overheating may occur there, leading to a risk of fire.

- Check whether the power cord is damaged. Check whether the sheath is damaged.
  If the power plug, cord, or sheath is damaged, replace with a new power cord (with plug and connector on each end) specified by KMBT. Using the damaged power cord may result in fire or electric shock.

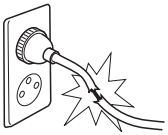

- Do not bundle or tie the power cord.
  Overheating may occur there, leading to a risk of fire.

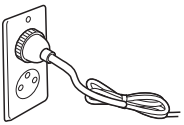

- Check whether dust is collected around the power plug and wall outlet.
  Using the power plug and wall outlet without removing dust may result in fire.

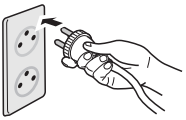

- Do not insert the power plug into the wall outlet with a wet hand.
  The risk of electric shock exists.

- When unplugging the power cord, grasp the plug, not the cable.
  The cable may be broken, leading to a risk of fire and electric shock.

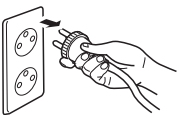

Wiring

⚠ WARNING

- Never use multi-plug adapters to plug multiple power cords in the same outlet.
  If used, the risk of fire exists.

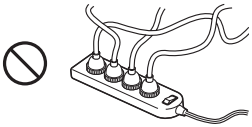

- When an extension cord is required, use a specified one. Current that can flow in the extension cord is limited, so using a too long extension cord may result in fire.
  Do not use an extension cable reel with the cable taken up. Fire may result.

2. Installation Requirements

Prohibited Installation Places

⚠ WARNING

- Do not place the product near flammable materials or volatile materials that may catch fire.
  A risk of fire exists.

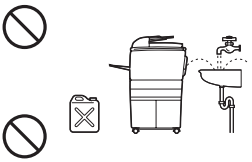

- Do not place the product in a place exposed to water such as rain.
  A risk of fire and electric shock exists.

When not Using the Product for a long time

⚠ WARNING

- When the product is not used over an extended period of time (holidays, etc.), switch it off and unplug the power cord.
  Dust collected around the power plug and outlet may cause fire.

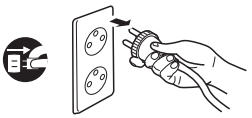

Ventilation

⚠ CAUTION

- The product generates ozone gas during operation, but it will not be harmful to the human body.

  If a bad smell of ozone is present in the following cases, ventilate the room.

  a. When the product is used in a poorly ventilated room
  b. When taking a lot of copies
  c. When using multiple products at the same time

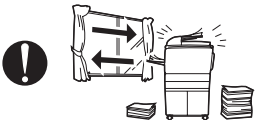

Stability

⚠ CAUTION

- Be sure to lock the caster stoppers.

  In the case of an earthquake and so on, the product may slide, leading to a injury.

Inspection before Servicing

⚠ CAUTION

- Before conducting an inspection, read all relevant documentation (service manual, technical notices, etc.) and proceed with the inspection following the prescribed procedure in safety clothes, using only the prescribed tools. Do not make any adjustment not described in the documentation.

  If the prescribed procedure or tool is not used, the product may break and a risk of injury or fire exists.

- Before conducting an inspection, be sure to disconnect the power plugs from the product and options.

  When the power plug is inserted in the wall outlet, some units are still powered even if the POWER switch is turned OFF. A risk of electric shock exists.

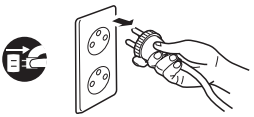

- The area around the fixing unit is hot.

  You may get burnt.

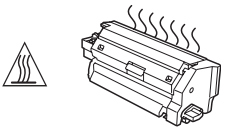

Inspection before Servicing

⚠ CAUTION

- Do not leave the machine unattended during transportation, installation, and inspection of the machine. If it is to be unavoidably left unattended, face protrusions toward the wall or take other necessary risk reducing action.

  The user may stumble over a protrusion of the machine or be caught by a cable, falling to the floor or being injured.

Work Performed with the Product Powered On

⚠ WARNING

- Take every care when making adjustments or performing an operation check with the product powered.

  If you make adjustments or perform an operation check with the external cover detached, you may touch live or high-voltage parts or you may be caught in moving gears or the timing belt, leading to a risk of injury.

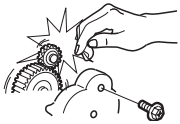

- Take every care when servicing with the external cover detached.

  High-voltage exists around the drum unit. A risk of electric shock exists.

- If it is absolutely necessary to service the machine with the door open or external covers removed, always be attentive to the motion of the internal parts.

  A normally protected part may cause unexpected hazards.

Safety Checkpoints

⚠ WARNING

- Check the exterior and frame for edges, burrs, and other damage.

  The user or CE may be injured.

- Whenever mounting an option on the machine, be attentive to the motion of the fellow worker of the joint work.

  The fellow worker may be injured with his or her finger or hand pinched between the machine and the option.

Safety Checkpoints

⚠ WARNING

- When mounting an option on the machine, be careful about the clearance between the machine and the option.
  You may be injured with your finger or hand pinched between the machine and the option.

- When removing a part that secures a motor, gear, or other moving part, disassembling a unit, or reinstalling any of such parts and units, be careful about moving parts and use care not to drop any part or unit. During the service procedure, give sufficient support for any heavy unit.
  You may be injured by a falling part or unit.

- Check the external covers and frame for possible sharp edges, burrs, and damage.
  They can be a cause of injury during use or servicing.

- When accessing a hard-to-view or narrow spot, be careful about sharp edges and burrs of the frame and parts.
  They may injure your hands or fingers.

- Do not allow any metal parts such as clips, staples, and screws to fall into the product.
  They can short internal circuits and cause electric shock or fire.

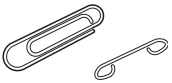

- Check wiring for squeezing and any other damage.
  Current can leak, leading to a risk of electric shock or fire.

- Carefully remove all toner remnants and dust from electrical parts and electrode units such as a charging corona unit.
  Current can leak, leading to a risk of product trouble or fire.

- Check high-voltage cables and sheaths for any damage.
  Current can leak, leading to a risk of electric shock or fire.

- Check electrode units such as a charging corona unit for deterioration and sign of leakage.
  Current can leak, leading to a risk of trouble or fire.

Safety Checkpoints

⚠ WARNING

- Before disassembling or adjusting the write unit (P/H unit) incorporating a laser, make sure that the power cord has been disconnected.

  The laser light can enter your eye, leading to a risk of loss of eyesight.

- Do not remove the cover of the write unit. Do not supply power with the write unit shifted from the specified mounting position.

  The laser light can enter your eye, leading to a risk of loss of eyesight.

- When replacing a lithium battery, replace it with a new lithium battery specified in the Parts Guide Manual. Dispose of the used lithium battery using the method specified by local authority.

  Improper replacement can cause explosion.

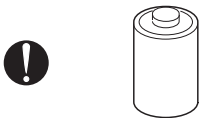

- After replacing a part to which AC voltage is applied (e.g., optical lamp and fixing lamp), be sure to check the installation state.

  A risk of fire exists.

- Check the interlock switch and actuator for loosening and check whether the interlock functions properly.

  If the interlock does not function, you may receive an electric shock or be injured when you insert your hand in the product (e.g., for clearing paper jam).

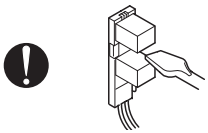

- Make sure the wiring cannot come into contact with sharp edges, burrs, or other pointed parts.

  Current can leak, leading to a risk of electric shock or fire.

- Make sure that all screws, components, wiring, connectors, etc. that were removed for safety check and maintenance have been reinstalled in the original location. (Pay special attention to forgotten connectors, pinched cables, forgotten screws, etc.)

  A risk of product trouble, electric shock, and fire exists.

Handling of Consumables

⚠ WARNING

- Toner and developer are not harmful substances, but care must be taken not to breathe excessive amounts or let the substances come into contact with eyes, etc. It may be stimulative.

  If the substances get in the eye, rinse with plenty of water immediately. When symptoms are noticeable, consult a physician.

- Never throw the used cartridge and toner into fire.

  You may be burned due to dust explosion.

Handling of Service Materials

⚠ CAUTION

- Unplug the power cord from the wall outlet.

  Drum cleaner (isopropyl alcohol) and roller cleaner (acetone-based) are highly flammable and must be handled with care. A risk of fire exists.

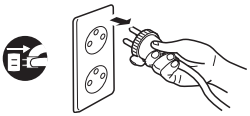

- Do not replace the cover or turn the product ON before any solvent remnants on the cleaned parts have fully evaporated.

  A risk of fire exists.

- Use only a small amount of cleaner at a time and take care not to spill any liquid. If this happens, immediately wipe it off.

  A risk of fire exists.

- When using any solvent, ventilate the room well.

  Breathing large quantities of organic solvents can lead to discomfort.

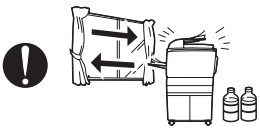

[4] Used Batteries Precautions

ALL Areas

CAUTION

Danger of explosion if battery is incorrectly replaced.
Replace only with the same or equivalent type recommended by the manufacturer.
Dispose of used batteries according to the manufacturer's instructions.

Germany

VORSICHT!

Explosionsgefahr bei unsachgemäßem Austausch der Batterie.
Ersatz nur durch denselben oder einen vom Hersteller empfohlenen gleichwertigen Typ.
Entsorgung gebrauchter Batterien nach Angaben des Herstellers.

France

ATTENTION

Il y a danger d'explosion s'il y a remplacement incorrect de la batterie.
Remplacer uniquement avec une batterie du même type ou d'un type équivalent recommandé par le constructeur.
Mettre au rebut les batteries usagées conformément aux instructions du fabricant.

Denmark

ADVARSEL!

Lithiumbatteri - Eksplosionsfare ved fejlagtig håndtering.
Udskiftning må kun ske med batteri af samme fabrikat og type.
Levér det brugte batteri tilbage til leverandøren.

Finland, Sweden

VAROITUS

Paristo voi räjähtää, jos se on virheellisesti asennettu.
Vaihda paristo ainoastaan laitevalmistajan suosittelemaan tyyppiin.
Hävitä käytetty paristo valmistajan ohjeiden mukaisesti.

VARNING

Explosionsfara vid felaktigt batteribyte.
Använd samma batterityp eller en ekvivalent typ som rekommenderas av apparattillverkaren.
Kassera använt batteri enligt fabrikantens instruktion.

Norway

ADVARSEL

Eksplosjonsfare ved feilaktig skifte av batteri.
Benytt samme batteritype eller en tilsvarende type anbefalt av apparatfabrikanten.
Brukte batterier kasseres i henhold til fabrikantens instruksjoner.

[5] Laser Safety

- This is a digital machine certified as a Class 1 laser product. There is no possibility of danger from a laser, provided the machine is serviced according to the instruction in this manual.

5.1 Internal Laser Radiation

semiconductor laser		
Maximum power of the laser diode		15 mW
Maximum average radiation power (*)	bizhub 423/363	17.3 μW
	bizhub 283/223	13.9 μW
Wavelength		770-800 nm

*at laser aperture of the Print Head Unit

- This product employs a Class 3B laser diode that emits an invisible laser beam. The laser diode and the scanning polygon mirror are incorporated in the print head unit.
- The print head unit is NOT A FIELD SERVICEABLE ITEM. Therefore, the print head unit should not be opened under any circumstances.

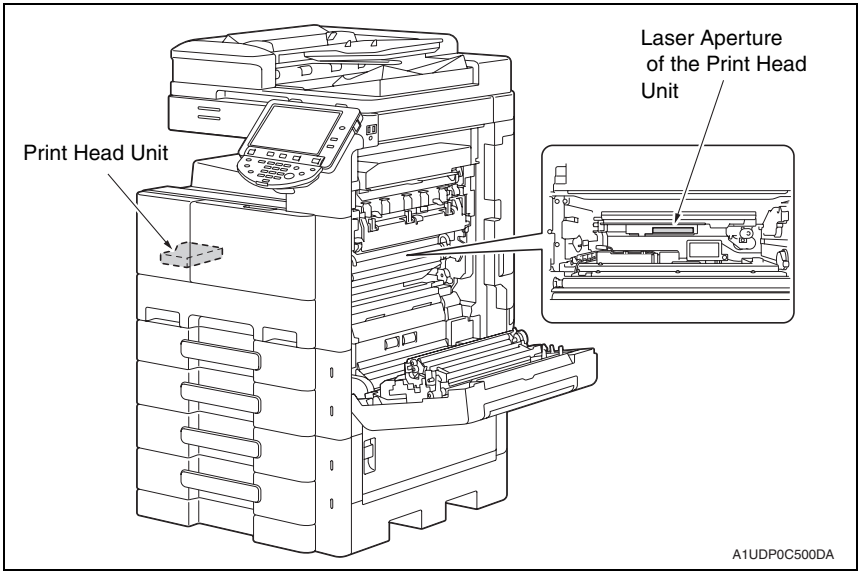

U.S.A., Canada
(CDRH Regulation)

- This machine is certified as a Class 1 Laser product under Radiation Performance Standard according to the Food, Drug and Cosmetic Act of 1990. Compliance is mandatory for Laser products marketed in the United States and is reported to the Center for Devices and Radiological Health (CDRH) of the U.S. Food and Drug Administration of the U.S. Department of Health and Human Services (DHHS). This means that the device does not produce hazardous laser radiation.

- The label shown on page S-16 indicates compliance with the CDRH regulations and must be attached to laser products marketed in the United States.

CAUTION
- **Use of controls, adjustments or performance of procedures other than those specified in this manual may result in hazardous radiation exposure.**

semiconductor laser	
Maximum power of the laser diode	15 mW
Wavelength	770-800 nm

All Areas

CAUTION
- **Use of controls, adjustments or performance of procedures other than those specified in this manual may result in hazardous radiation exposure.**

semiconductor laser	
Maximum power of the laser diode	15 mW
Wavelength	770-800 nm

Denmark

ADVARSEL
- **Usynlig laserstråling ved åbning, når sikkerhedsafbrydere er ude af funktion. Undgå udsættelse for stråling. Klasse 1 laser produkt der opfylder IEC60825-1 sikkerheds kravene.**

halvlederlaser	
Laserdiodens højeste styrke	15 mW
bølgelængden	770-800 nm

Finland, Sweden

LUOKAN 1 LASERLAITE
KLASS 1 LASER APPARAT

VAROITUS!
- **Laitteen käyttäminen muulla kuin tässä käyttöohjeessa mainitulla tavalla saattaa altistaa käyttäjän turvallisuusluokan 1 ylittävälle näkymättömälle laser-säteilylle.**

puolijohdelaser	
Laserdiodin suurin teho	15 mW
aallonpituus	770-800 nm

VARNING!
- **Om apparaten används på annat sätt än i denna bruksanvisning specificerats, kan användaren utsättas för osynlig laserstrålning, som överskrider gränsen för laserklass 1.**

halvledarlaser	
Den maximala effekten för laserdioden	15 mW
våglängden	770-800 nm

VARO!
- **Avattaessa ja suojalukitus ohitettaessa olet alttiina näkymättomälle laser-säteilylle. Älä katso säteeseen.**

VARNING!
- **Osynlig laserstråining när denna del är öppnad och spärren är urkopplad. Betrakta ej stråien.**

Norway

ADVERSEL
- **Dersom apparatet brukes på annen måte enn spesifisert i denne bruksanvisning, kan brukeren utsettes för unsynlig laserstrålning, som overskrider grensen for laser klass 1.**

halvleder laser	
Maksimal effekt till laserdiode	15 mW
bølgelengde	770-800 nm

5.2 Laser Safety Label

- A laser safety label is attached to the inside of the machine as shown below.

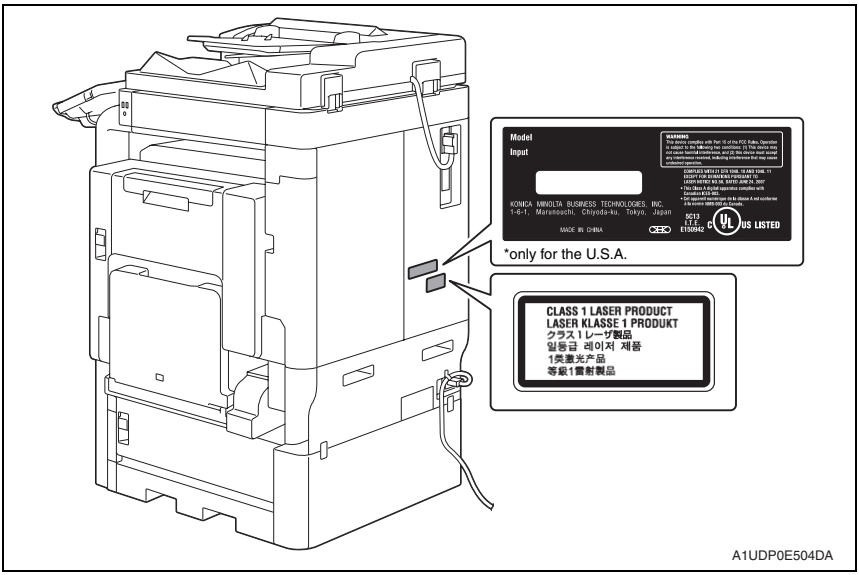

5.3 Laser Caution Label

- A laser caution label is attached to the outside of the machine as shown below.

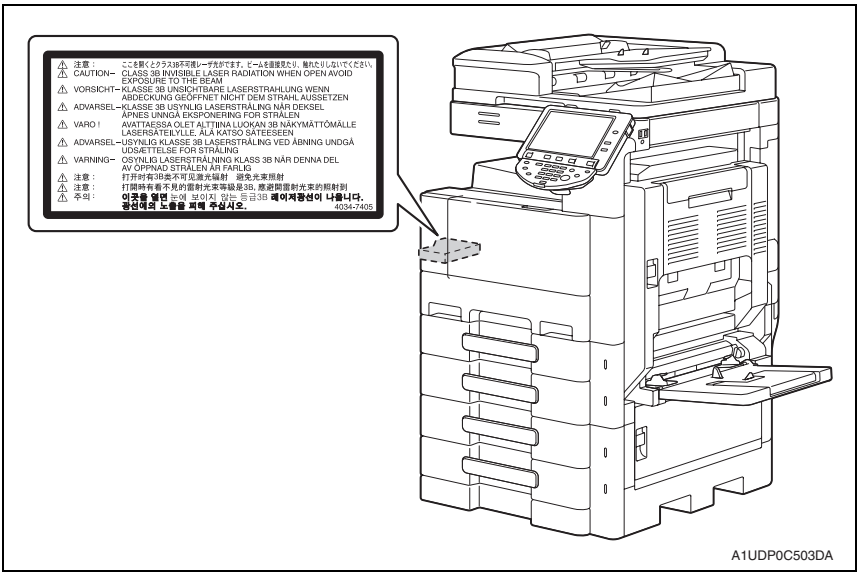

5.4 PRECAUTIONS FOR HANDLING THE LASER EQUIPMENT

- When laser protective goggles are to be used, select ones with a lens conforming to the above specifications.
- When a disassembly job needs to be performed in the laser beam path, such as when working around the printerhead and PC drum, be sure first to turn the printer OFF.
- If the job requires that the printer be left ON, take off your watch and ring and wear laser protective goggles.
- A highly reflective tool can be dangerous if it is brought into the laser beam path. Use utmost care when handling tools on the user's premises.

WARNING INDICATIONS ON THE MACHINE

Caution labels shown are attached in some areas on/in the machine.
When accessing these areas for maintenance, repair, or adjustment, special care should be taken to avoid burns and electric shock.

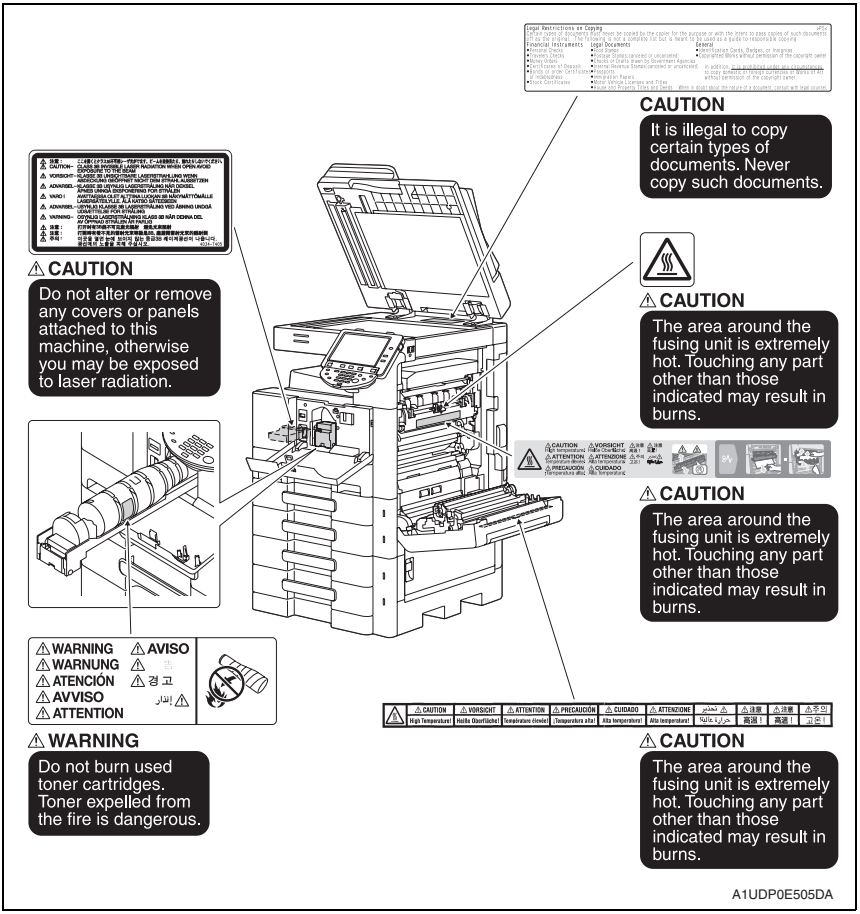

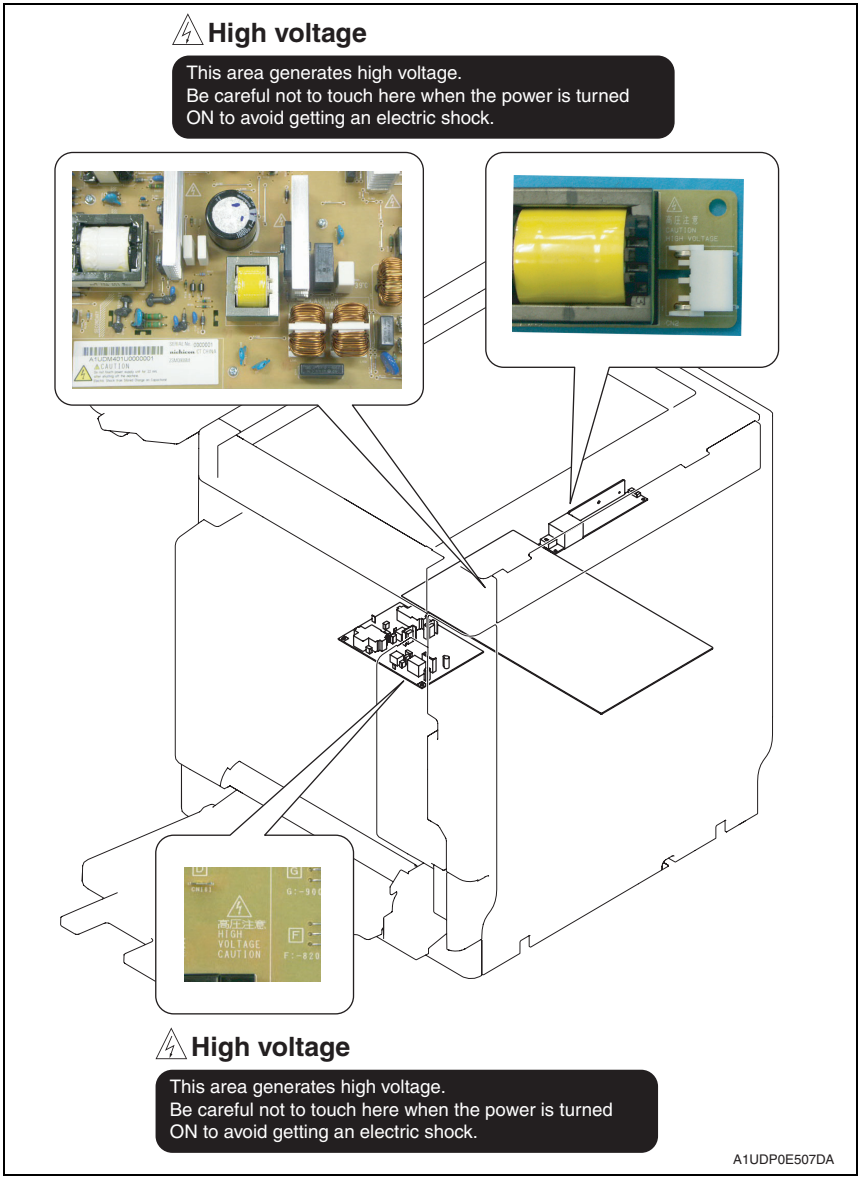

⚠ CAUTION:

- **You may be burned or injured if you touch any area that you are advised not to touch by any caution label. Do not remove caution labels. If any caution label has come off or soiled and therefore the caution cannot be read, contact our service office.**

MEASURES TO TAKE IN CASE OF AN ACCIDENT

1. If an accident has occurred, the distributor who has been notified first must immediately take emergency measures to provide relief to affected persons and to prevent further damage.
2. If a report of a serious accident has been received from a customer, an on-site evaluation must be carried out quickly and KMBT must be notified.
3. To determine the cause of the accident, conditions and materials must be recorded through direct on-site checks, in accordance with instructions issued by KMBT.
4. For reports and measures concerning serious accidents, follow the regulations specified by every distributor.

Composition of the service manual

This service manual consists of Theory of Operation section and Field Service section to explain the main machine and its corresponding options.

Theory of Operation section gives, as information for the CE to get a full understanding of the product, a rough outline of the object and role of each function, the relationship between the electrical system and the mechanical system, and the timing of operation of each part.

Field Service section gives, as information required by the CE at the site (or at the customer's premise), a rough outline of the service schedule and its details, maintenance steps, the object and role of each adjustment, error codes and supplementary information.

The basic configuration of each section is as follows. However some options may not be applied to the following configuration.

<Theory of Operation section>

OUTLINE:	Explanation of system configuration, product specifications, unit configuration, and paper path
COMPOSITION/OPERATION:	Explanation of configuration of each unit, operating system, and control system

<Field service section>

OUTLINE:	Explanation of system configuration, and product specifications
MAINTENANCE:	Explanation of service schedule, maintenance steps, service tools, removal/reinstallation methods of major parts, and firmware version up method etc.
ADJUSTMENT/SETTING:	Explanation of utility mode, service mode, and mechanical adjustment etc.
TROUBLESHOOTING:	Explanation of lists of jam codes and error codes, and their countermeasures etc.
APPENDIX:	Parts layout drawings, connector layout drawings, timing chart, overall layout drawing are attached.

Notation of the service manual

A. Product name

In this manual, each of the products is described as follows:

(1)	bizhub 423/363/283/223:	Main body
(2)	Microsoft Windows NT 4.0:	Windows NT 4.0 or Windows NT
	Microsoft Windows 2000:	Windows 2000
	Microsoft Windows XP:	Windows XP
	Microsoft Windows Vista:	Windows Vista
	Microsoft Windows 7:	Windows 7
	When the description is made in combination of the OS's mentioned above:	
		Windows NT 4.0/2000
		Windows NT/2000/XP/Vista/7

B. Brand name

The company names and product names mentioned in this manual are the brand name or the registered trademark of each company.

C. Feeding direction

- When the long side of the paper is parallel with the feeding direction, it is called short edge feeding. The feeding direction which is perpendicular to the short edge feeding is called the long edge feeding.
- Short edge feeding will be identified with [S (abbreviation for Short edge feeding)] on the paper size. No specific notation is added for the long edge feeding.
  When the size has only the short edge feeding with no long edge feeding, [S] will not be added to the paper size.

<Sample notation>

Paper size	Feeding direction	Notation
A4	Long edge feeding	A4
	Short edge feeding	A4S
A3	Short edge feeding	A3

KONICA MINOLTA

SERVICE MANUAL

FIELD SERVICE

bizhub

423/363/283/223

2012.02

KONICA MINOLTA BUSINESS TECHNOLOGIES, INC. Ver. 1.1

Revision history

After publication of this service manual, the parts and mechanism may be subject to change for improvement of their performance.
Therefore, the descriptions given in this service manual may not coincide with the actual machine.

When any change has been made to the descriptions in the service manual, a revised version will be issued with a revision mark added as required.

Revision mark:

- To indicate clearly a specific section revised within text, 1 is shown at the left margin of the corresponding revised section.
  The number inside 1 represents the number of times the revision has been made.

- To indicate clearly a specific page that contains a revision or revisions, the page number appearing at the left or right bottom of the specific page is marked with 1 .
  The number inside 1 represents the number of times the revision has been made.

NOTE

Revision marks shown in a page are restricted only to the latest ones with the old ones deleted.

- When a page revised in Ver. 2.0 has been changed in Ver. 3.0:
  The revision marks for Ver. 3.0 only are shown with those for Ver. 2.0 deleted.
- When a page revised in Ver. 2.0 has not been changed in Ver. 3.0:
  The revision marks for Ver. 2.0 are left as they are.

Date	Service manual Ver.	Revision mark	Descriptions of revision
2012/02	1.11	▲	Error correction
2012/02	1.1	1	Error corrections
2010/04	1.0	—	Issue of the first edition

CONTENTS

bizhub 423/363/283/223 Main body

OUTLINE

1. SYSTEM CONFIGURATION 1
2. PRODUCT SPECIFICATIONS 3
   - 2.1 Type 3
   - 2.2 Functions 4
   - 2.3 Paper 6
   - 2.4 Materials 7
   - 2.5 Print volume 7
   - 2.6 Machine specifications 8
   - 2.7 Operating environment 8
   - 2.8 Print functions 9
   - 2.9 Scan functions 12

MAINTENANCE

3. PERIODICAL MAINTENANCE ITEMS 15
   - 3.1 Concept of periodical maintenance 15
     - 3.1.1 Main body (bizhub 423) 15
     - 3.1.2 Main body (bizhub 363) 16
     - 3.1.3 Main body (bizhub 283) 18
     - 3.1.4 Main body (bizhub 223) 20
     - 3.1.5 DF-621 21
     - 3.1.6 PC-109/PC-208/PC-409 22
     - 3.1.7 JS-505 22
     - 3.1.8 JS-603/FS-527/SD-509/PK-517 22
     - 3.1.9 FS-529 23
   - 3.2 Periodical replacement parts list 24
     - 3.2.1 Main body 24
     - 3.2.2 Option 26
   - 3.3 Periodical cleaning parts list 27
     - 3.3.1 Main body 27
     - 3.3.2 Option 27
   - 3.4 Concept of parts life 28
     - 3.4.1 Life value of consumables and parts 28
     - 3.4.2 Conditions for life specifications values 29

4. PERIODICAL MAINTENANCE PROCEDURE 30
4.1 Housing section 30
4.1.1 Replacing the ozone filter 30
4.1.2 Replacing the toner filter (main body) 31
4.2 Photo conductor section 32
4.2.1 Replacing the drum unit 32
4.3 Developing section 34
4.3.1 Replacing the toner filter (developing unit) 34
4.3.2 Replacing the developing unit 35
4.3.3 Replacing the developer 38
4.4 Toner supply section 42
4.4.1 Replacing the toner bottle 42
4.5 Transfer section 44
4.5.1 Replacing the transfer roller unit 44
4.6 Paper feed section 45
4.6.1 Replacing the manual bypass tray feed roller 45
4.6.2 Replacing the manual bypass tray separation roller assy 46
4.6.3 Replacing the tray 1 feed roller/tray 1 pick-up roller 48
4.6.4 Replacing the tray 1 separation roller 51
4.6.5 Replacing the tray 2 feed roller/tray 2 pick-up roller 53
4.6.6 Replacing the tray 2 separation roller 53
4.7 Registration section 54
4.7.1 Replacing the timing roller bearings/timing roller gear1, 2 54
4.7.2 Replacing the paper dust remover 56
4.7.3 Cleaning of the timing roller 56
4.8 Fusing section 57
4.8.1 Replacing the fusing unit 57
4.9 Duplex section 59
4.9.1 Cleaning of the duplex transport rollers 59
5. OTHER MAINTENANCE ITEMS 60
5.1 Disassembly/adjustment prohibited items 60
5.1.1 CCD unit 61
5.1.2 PH unit 61
5.1.3 Fusing unit 61
5.2 Notes when transporting the machine 62
5.2.1 Protective materials 62
5.3 Disassembly/reassembly parts list 63
5.4 Cleaning parts list 65

5.5 Disassembly/reassembly procedure 66
5.5.1 Front door 66
5.5.2 Left cover 66
5.5.3 Exit tray 66
5.5.4 Rear right cover 67
5.5.5 Upper right cover 67
5.5.6 Rear cover/1 68
5.5.7 Rear cover/2 68
5.5.8 Lower rear cover 68
5.5.9 Scanner rear cover 69
5.5.10 Scanner right cover 70
5.5.11 Scanner right front cover 70
5.5.12 USB interface cover 71
5.5.13 Scanner left front cover 71
5.5.14 Scanner upper front cover 71
5.5.15 Scanner left cover 72
5.5.16 Scanner upper rear cover 72
5.5.17 Scanner front cover 73
5.5.18 Slit glass cover 74
5.5.19 Original glass 74
5.5.20 Control panel assy 75
5.5.21 Tray 1 75
5.5.22 Tray 2 76
5.5.23 Front cover 76
5.5.24 Imaging unit 78
5.5.25 Tray 1 paper feed unit 79
5.5.26 Tray 2 paper feed unit 80
5.5.27 PH unit 81
5.5.28 CCD board unit 84
5.5.29 Exposure unit 86
5.5.30 Toner hopper unit 87
5.5.31 Regist unit 88
5.5.32 Switchback unit 89
5.5.33 Manual bypass tray unit 90
5.5.34 Conveyance unit 91
5.5.35 Hopper drive unit 92
5.5.36 MFP board box 94

5.5.37 Main drive unit 96
5.5.38 Hard disk drive 98
5.5.39 Scanner relay board (REYB/SCAN) 99
5.5.40 Inverter board (INVB) 100
5.5.41 Machine condition monitor board (MCMB) 101
5.5.42 Printer control board (PRCB) 101
5.5.43 DC power supply (DCPU) 103
5.5.44 MFP board (MFPB) 104
5.5.45 High voltage unit (HV) 107
5.5.46 SODIMM (DIMM) 108
5.5.47 NVRAM board (NRB) 108
5.5.48 Paper feed tray 1 paper FD sensor board (PSDB/1) 109
5.5.49 Paper feed tray 2 paper FD sensor board (PSDB/2) 110
5.5.50 Paper feed tray 1 LED board, Paper feed tray 2 LED board (LEDB1, LEDB2) 112
5.5.51 Scanner motor (M201) 112
5.5.52 Duplex transport motor (M92) 114
5.5.53 Transport motor (M1) 115
5.5.54 PC motor (M2) 116
5.5.55 Toner bottle motor (M3) 116
5.5.56 Toner supply motor (M4) 117
5.5.57 Switchback motor (M91) 117
5.5.58 Tray 1 lift-up motor (M11) 118
5.5.59 Tray 2 lift-up motor (M21) 118
5.5.60 Power supply cooling fan motor (FM1) 119
5.5.61 Cooling fan motor (FM2) 120
5.5.62 Fusing unit cooling fan motor (FM3) 121
5.5.63 Toner suction fan motor (FM4) 122
5.5.64 MFP board cooling fan motor (FM5) 123
5.5.65 Tray 1 paper feed clutch (CL11) 124
5.5.66 Tray 2 paper feed clutch (CL21) 125
5.5.67 Tray 2 vertical transport clutch (CL22) 126
5.5.68 Manual paper feed clutch (CL81) 127
5.5.69 Registration clutch (CL1) 128
5.5.70 Manual pick-up solenoid (SD81) 128
5.5.71 Temperature/humidity sensor (TEM/HUM) 129
5.5.72 Scanner drive cable 130
5.6 Cleaning procedure 136

5.6.1 Tray 1 feed roller, tray 1 pick-up roller, tray 1 separation roller 136
5.6.2 Tray 2 feed roller, tray 2 pick-up roller, tray 2 separation roller 137
5.6.3 Tray 2 transport roller 138
5.6.4 Manual bypass tray feed roller 138
5.6.5 Manual bypass tray separation roller 138
5.6.6 Original glass 139
5.6.7 Scanner rails 139
5.6.8 Mirrors (1st/2nd/3rd) 139
5.6.9 Lens 140
5.6.10 CCD sensor 141
6. SERVICE TOOL 142
6.1 Service material list 142
7. FIRMWARE REWRITING 143
7.1 Outline 143
7.2 USB memory 143
7.2.1 Preparation 143
7.2.2 Procedure 143
7.2.3 Action when data transfer fails 146
7.3 Updating the firmware with the Internet ISW 147
7.3.1 Outline 147
7.3.2 Service environment 147
7.3.3 Preparations for firmware rewriting 147
7.3.4 Firmware rewriting from the control panel 150
7.3.5 Firmware rewriting from the CS Remote Care 152
7.3.6 Error code list for the Internet ISW 153
8. COMMERCIALLY AVAILABLE PARTS 156
8.1 Installing the key counter 156
8.1.1 Configuration 156
8.1.2 Procedure 156
8.2 Installing the original size detection sensor/2 (PS205) 159
8.2.1 Procedure 159

ADJUSTMENT/SETTING

9. HOW TO USE THE ADJUSTMENT/SETTING SECTION 161
10. UTILITY 162
10.1 List of utility mode 162
10.2 Starting/Exiting 175
10.2.1 Starting procedure 175

10.2.2 Exiting procedure 175
10.3 Touch Panel Adjustment 176
10.4 One-Touch User Box Registration 177
10.4.1 Create One-Touch destination-Address Book (Public)/(Personal) 177
10.4.2 Create One-Touch destination-Group 178
10.4.3 Create One-Touch destination-E-mail Settings 179
10.4.4 Create User Box 179
10.4.5 Create User Box-Public/Personal User Box 179
10.4.6 Create User Box-Confidential RX User Box 180
10.4.7 Create User Box-Bulletin Board User Box 180
10.4.8 Create User Box-Relay User Box 180
10.4.9 Limiting Access to Destinations 181
10.4.10 Limiting Access to Destinations-Apply Levels/Groups to Destinations 181
10.5 User Settings 182
10.5.1 System Settings-Language Selection 182
10.5.2 System Settings-Measurement Unit Settings 182
10.5.3 System Settings-Paper Tray Settings 182
10.5.4 System Settings-Auto Color Level Adjust. 183
10.5.5 System Settings-Power Save Settings 183
10.5.6 System Settings-Output Settings 184
10.5.7 System Settings-AE Level Adjustment 185
10.5.8 System Settings-Auto Paper Select for Small Original 185
10.5.9 System Settings-Blank Page Print Settings 185
10.5.10 System Settings-Page Number Print Position 186
10.5.11 System Settings-Select Keyboard 186
10.5.12 Custom Display Settings-Copier Settings 187
10.5.13 Custom Display Settings-Scan/Fax Settings 188
10.5.14 Custom Display Settings-User Box Settings 189
10.5.15 Custom Display Settings-Copy Screen 190
10.5.16 Custom Display Settings-Fax Active Screen 190
10.5.17 Custom Display Settings-Color Selection Settings 190
10.5.18 Custom Display Settings-Left Panel Display Default 191
10.5.19 Custom Display Settings-Search Option Settings 191
10.5.20 Copier Settings-Auto Booklet ON when Fold & Staple 191
10.5.21 Copier Settings-Auto Zoom for Combine/Booklet 191
10.5.22 Copier Settings-Auto Sort/Group Selection 192
10.5.23 Copier Settings-Default Copy Settings 192
10.5.24 Copier Settings-Default Enlarge Display Settings 193

10.5.25 Copier Settings-When AMS Direction is Incorrect 193
10.5.26 Copier Settings-Separate Scan Output Method..... 193
10.5.27 Copier Settings-Enlargement Rotation 194
10.5.28 Copier Settings-Auto Zoom (Platen) 194
10.5.29 Copier Settings-Auto Zoom (ADF) 194
10.5.30 Copier Settings-Specify Default Tray when APS Off 194
10.5.31 Copier Settings-Select Tray for Insert Sheet 195
10.5.32 Copier Settings-Half-Fold Specification 195
10.5.33 Copier Settings-Print Jobs During Copy Operation..... 195
10.5.34 Copier Settings-Automatic Image Rotation 195
10.5.35 Copier Settings-Finishing Program 196
10.5.36 Copier Settings-Card Shot Settings 196
10.5.37 Scan/Fax Settings-JPEG Compression Level 197
10.5.38 Scan/Fax Settings-Black Compression Level..... 197
10.5.39 Scan/Fax Settings-TWAIN Lock Time 197
10.5.40 Scan/Fax Settings-Default Scan/Fax Settings..... 197
10.5.41 Scan/Fax Settings-Default Enlarge Display Settings 198
10.5.42 Scan/Fax Settings-Compact PDF/XPS Compression Level 198
10.5.43 Scan/Fax Settings-Color TIFF Type 199
10.5.44 Scan/Fax Settings-OCR Operation Setting 199
10.5.45 Scan/Fax Settings-Graphic Outlining 199
10.5.46 Printer Settings-Basic Settings 199
10.5.47 Printer Settings-Paper Setting..... 201
10.5.48 Printer Settings-PCL Settings 203
10.5.49 Printer Settings-PS Setting 204
10.5.50 Printer Settings-XPS Settings 204
10.5.51 Printer Settings-Print Reports 205
10.5.52 Printer Settings-TIFF Image Paper Setting 205
10.5.53 Change Password 206
10.5.54 Change E-mail Address 206
10.5.55 Change Icon..... 206
10.5.56 Register Authentication Settings 207
10.5.57 Registered Application Setting-Default Application Selection 207
10.5.58 Cellular Phone/PDA Setting-Link File Error Notification..... 207
10.5.59 Cellular Phone/PDA Setting-Proxy Server Use..... 207
10.5.60 Cellular Phone/PDA Setting-Print Settings 207
10.6 Administrator Settings..... 208

10.6.1 System Settings-Power Save Settings 208
10.6.2 System Settings-Output Settings 209
10.6.3 System Settings-Date/Time Settings 210
10.6.4 System Settings-Daylight Saving Time 210
10.6.5 System Settings-Weekly Timer Settings 211
10.6.6 System Settings-Restrict User Access 212
10.6.7 System Settings-Expert Adjustment 214
10.6.8 System Settings-List/Counter 239
10.6.9 System Settings-Reset Settings 241
10.6.10 System Settings-User Box Settings 242
10.6.11 System Settings-Standard Size Setting 245
10.6.12 System Settings-Stamp Settings 245
10.6.13 System Settings-Blank Page Print Settings 246
10.6.14 System Settings-Application Key Settings 246
10.6.15 System Settings-Skip Job Operation Settings 246
10.6.16 System Settings-Default Bypass Paper Type Setting 246
10.6.17 System Settings-Page Number Print Position 247
10.6.18 System Settings-Advanced Preview Setting 247
10.6.19 Administrator/Machine Settings-Administrator Registration 247
10.6.20 Administrator/Machine Settings-Input Machine Address 247
10.6.21 One-Touch/User Box Registration-Create One-Touch Destination 248
10.6.22 One-Touch/User Box Registration-Create User Box 250
10.6.23 One-Touch/User Box Registration-One-Touch/ User Box Registration List 251
10.6.24 One-Touch/User Box Registration-Maximum Number of User Boxes 252
10.6.25 User Authentication/Account Track-General Settings 252
10.6.26 User Authentication/Account Track-User Authentication Setting 255
10.6.27 User Authentication/Account Track-Account Track Setting 257
10.6.28 User Authentication/Account Track-Print without Authentication 257
10.6.29 User Authentication/Account Track-Print Counter List 258
10.6.30 User Authentication/Account Track-External Server Settings 258
10.6.31 User Authentication/Account Track-Limiting Access to Destinations 258
10.6.32 User Authentication/Account Track-Authentication Device Settings 259
10.6.33 User Authentication/Account Track-Auth/Acct Track Common Setting 260
10.6.34 User Authentication/Account Track-Scan to Home Settings 261
10.6.35 User Authentication/Account Track-Scan to Authorized Folder Settings 261
10.6.36 Network Settings-TCP/IP Settings 261
10.6.37 Network Setting-NetWare Settings 267

10.6.38 Network Settings-http Server Settings 270
10.6.39 Network Settings-FTP Settings 272
10.6.40 Network Settings-SMB Setting 273
10.6.41 Network Settings-LDAP Settings 275
10.6.42 Network Settings-E-mail Settings 280
10.6.43 Network Settings-SNMP Setting 287
10.6.44 Network Settings-AppleTalk Settings 291
10.6.45 Network Settings-Bonjour Setting 291
10.6.46 Network Settings-TCP Socket Settings 292
10.6.47 Network Settings-Network Fax Setting 293
10.6.48 Network Settings-WebDAV Settings 294
10.6.49 Network Settings-Web Service Settings 296
10.6.50 Network Settings-SSDP Settings 299
10.6.51 Network Settings-Detail Settings 299
10.6.52 Network Settings-IEEE802.1X Authentication Settings 304
10.6.53 Network Settings-Web Browser Setting 304
10.6.54 Network Settings-Bluetooth Setting 305
10.6.55 Copier Settings-Auto Zoom (Platen) 305
10.6.56 Copier Settings-Auto Zoom (ADF) 305
10.6.57 Copier Settings-Specify Default Tray when APS OFF 305
10.6.58 Copier Settings-Select Tray for Insert Sheet 305
10.6.59 Copier Settings-Print Jobs During Copy Operation 306
10.6.60 Copier Settings-Automatic Image Rotation 306
10.6.61 Copier Settings-Card Shot Settings 306
10.6.62 Printer Settings-USB Timeout 307
10.6.63 Printer Settings-Network Timeout 307
10.6.64 Printer Settings-Print XPS Errors 307
10.6.65 Printer Settings-PSWC Direct Print 307
10.6.66 Printer Settings-Assign Account to Acquire Device Info 308
10.6.67 Fax Settings 308
10.6.68 Fax Settings-Header Information 308
10.6.69 Fax Settings-Header/Footer Position 308
10.6.70 Fax Settings-Line Parameter Setting 309
10.6.71 Fax Settings-TX/RX Settings 311
10.6.72 Fax Settings-Function Settings 314
10.6.73 Fax Settings-PBX Connection Setting 318
10.6.74 Fax Settings-Report Settings 318

10.6.75 Fax Settings-Job Settings List 322
10.6.76 Fax Settings-Multi Line Settings 322
10.6.77 Fax Settings-Network Fax Settings 324
10.6.78 Fax Print Quality Settings 326
10.6.79 System Connection-OpenAPI Settings 327
10.6.80 System Connection-Call Remote Center 328
10.6.81 System Connection-Automatic Prefix/Suffix Setting 328
10.6.82 System Connection-Printer Information 328
10.6.83 System Connection-Cellular Phone/PDA Setting 329
10.6.84 Security Settings-Administrator Password 329
10.6.85 Security Settings-User Box Admin. Setting 330
10.6.86 Security Settings-Administrator Security Levels 330
10.6.87 Security Settings-Security Details 331
10.6.88 Security Settings-Enhanced Security Mode 337
10.6.89 Security Settings-HDD Settings/SSD Settings 339
10.6.90 Security Settings-Function Management Setting 345
10.6.91 Security Settings-Stamp Settings 346
10.6.92 Security Settings-Image Log Transfer Settings 347
10.6.93 Security Settings-Driver Password Encryption Setting 347
10.6.94 License Settings-Get Request Code 348
10.6.95 License Settings-Install License 348
10.6.96 License Settings-List of Enabled Functions 348
10.6.97 OpenAPI Authentication Management-Restriction Code Setting 349
10.7 My Panel Settings 349
10.8 Device Information 349
10.9 Meter Count 350
10.9.1 Counter details 350
11. ADJUSTMENT ITEM LIST 354
12. SERVICE MODE 356
12.1 List of service mode 356
12.2 Starting/Exiting 361
12.2.1 Starting procedure 361
12.3 Date/Time Input mode 362
12.4 Machine 363
12.4.1 Fusing Temperature 363
12.4.2 Org. Size Detecting Sensor Adj. 364
12.4.3 Printer Area-Leading Edge Adjustment 365
12.4.4 Printer Area-Printer Image Centering Side 1 366

12.4.5 Printer Area-Leading Edge Adj. Side 2 (Duplex) 367
12.4.6 Printer Area-Prt. Image Center. Side 2 (Dup) 368
12.4.7 Printer Area-Paper Feed Direction Adj. 369
12.4.8 Tray Printing Position: Tip 370
12.4.9 Scan Area 371
12.4.10 Scan Area-Image Position: Leading Edge 372
12.4.11 Scan Area-Scanner Image Centering 373
12.4.12 Scan Area-Main Scan Zoom Adj. 374
12.4.13 Scan Area-Sub Scan Zoom Adj. 375
12.4.14 Printer Reg. Loop Adj. 376
12.4.15 Manual Bypass Tray Width Adj 376
12.4.16 Lead Edge Erase Adjustment 377
12.4.17 ADF Scan Glass Contamination 377
12.4.18 Non-Image Area Erase Check 378
12.4.19 Cooling Fan Stop Delay 378
12.4.20 Fusing Productivity Choice 378
12.4.21 Print Interval Extension 379
12.5 Firmware Version 379
12.6 Imaging Process Adjustment 380
12.6.1 Gradation Adjust 380
12.6.2 Max Image Density Adj 382
12.6.3 TCR Level Setting 382
12.6.4 Image Background Adj 383
12.6.5 Transfer Voltage Fine Adj 383
12.6.6 TCR Sensor Adjust 384
12.6.7 Paper Separation Adjustment - Paper separation adjustment 384
12.6.8 Paper Separation Adjustment - Paper Separation Voltage Adjust 385
12.6.9 Manual Toner Add 385
12.6.10 Dot Enhancement 385
12.7 CS Remote Care 386
12.7.1 Outlines 386
12.7.2 Setting up the CS Remote Care 386
12.7.3 Software SW setting for CS Remote Care 391
12.7.4 Setup confirmation 399
12.7.5 Calling the maintenance 399
12.7.6 Calling the center from the administrator 400
12.7.7 Checking the transmission log 400
12.7.8 Detail on settings 400

12.7.9 List of the CS Remote Care error code 409
12.7.10 Troubleshooting for CS Remote Care 416
12.7.11 CS Remote Care Operation under Enhanced Security Mode 416
12.8 System 1 417
12.8.1 Marketing Area 417
12.8.2 Tel/Fax Number 418
12.8.3 Serial Number 418
12.8.4 Sleep ON/OFF Choice Setting 419
12.8.5 Foolscap Size Setting 419
12.8.6 Original Size Detection 419
12.8.7 Install Date 420
12.8.8 Initialization-Clear All Data 420
12.8.9 Initialization-Clear Individual Data 421
12.8.10 Initialization-System Error Clear 422
12.8.11 Problem Unit Isolation Set. 423
12.8.12 Machine State LED Setting 424
12.9 System 2 425
12.9.1 HDD 425
12.9.2 Image Controller Setting 426
12.9.3 Option Board Status 426
12.9.4 Consumable Life Reminder 427
12.9.5 Unit Change 427
12.9.6 Software Switch Setting 428
12.9.7 Software Switch Setting-Setting items in the software switch setting 428
12.9.8 CDD Calibration 428
12.9.9 LCT Paper Size Setting 429
12.9.10 Line Mag Setting 429
12.9.11 Data Capture 429
12.9.12 ADF Scan Glass Contamin. Set.-ADF Scan Glass Contamin. Sensitivity 432
12.9.13 ADF Scan Glass Contamin. Set.
-ADF Scan Glass Contamin. Warn/Level 432
12.9.14 ADF Scan Glass Contamin. Set.-Feed Cleaning Settings 433
12.9.15 Stamp 433
12.9.16 Network Fax Settings 433
12.9.17 User Paper Settings 434
12.9.18 Coverage Rate Screen 435
12.9.19 JAM Code Display Setting 435
12.9.20 BootUp Screen 435

12.9.21 Install Data 437
12.9.22 Bluetooth Settings 437
12.9.23 Auto Drum Dry 437
12.10 Counter 438
12.10.1 Common procedure 438
12.10.2 Life 438
12.10.3 Service Call Counter 439
12.10.4 Section Service Call 439
12.10.5 Warning 439
12.10.6 Maintenance 440
12.10.7 Service Total 440
12.10.8 Counter of Each Mode 441
12.10.9 Service Call History (Data) 441
12.10.10 ADF Paper Pages 441
12.10.11 Paper Jam History 441
12.10.12 Fax Connection Error 441
12.10.13 ADF Scan Glass Contamin. Counter 442
12.10.14 Jam 442
12.10.15 Section JAM 442
12.11 List Output 443
12.11.1 Batch List CSV Output 443
12.11.2 Machine Management List 443
12.11.3 Adjustment List 444
12.11.4 Parameter List 445
12.11.5 Service Parameter 446
12.11.6 Protocol Trace 448
12.11.7 Fax Setting List 449
12.11.8 Fax Analysis List 454
12.11.9 SIP Protocol Trace 454
12.12 State Confirmation 454
12.12.1 Sensor Check 454
12.12.2 Sensor check screens 455
12.12.3 Sensor check list 459
12.12.4 Table Number 468
12.12.5 Level History1 468
12.12.6 Level History 2 468
12.12.7 Temp. & Humidity 468
12.12.8 CCD Check 469

12.12.9 Memory/HDD Adj.-Memory Check 469
12.12.10 Memory/HDD Adj.-Compress / Decompression Check 470
12.12.11 Memory/HDD Adj.-JPEG Check 470
12.12.12 Memory/HDD Adj.-Memory Bus Check 470
12.12.13 Memory/HDD Adj.-DSC Bus Check 471
12.12.14 Memory/HDD Adj.-HDD R/W Check 471
12.12.15 Memory/HDD Adj.-SSD R/W Check 471
12.12.16 Memory/HDD Adj.-HDD Format 472
12.12.17 Memory/HDD Adj.-SSD Format 473
12.12.18 Memory/HDD Adj.-SSD -> HDD Data Copy 473
12.12.19 Memory/HDD State 474
12.12.20 Adjustment Data List 474
12.13 Test Mode 475
12.13.1 Procedure for test pattern output 475
12.13.2 Gradation Pattern 475
12.13.3 Halftone Pattern 476
12.13.4 Lattice Pattern 477
12.13.5 Paper Passage Test 477
12.13.6 Fax Test 478
12.14 ADF 481
12.14.1 Original Stop Position 481
12.14.2 Registration Loop Adj. 482
12.14.3 Auto Stop Position Adjustment 483
12.14.4 Paper Passage 485
12.14.5 Sensor Check 486
12.14.6 Original Tray Width 488
12.14.7 Read Pos Adj 489
12.14.8 Feed Zoom 491
12.14.9 Scanning Light Adjustment 492
12.14.10 Mixed original Size adjustment 492
12.14.11 FD-Mag. Adj. (B) 493
12.15 FAX setting 494
12.15.1 Line1, Line2-Modem/NCU 494
12.15.2 Line 1, Line 2-Network 498
12.15.3 Line 1-System 500
12.15.4 Line 1-Fax File Format 503
12.15.5 Line 1, Line 2-Communication 503
12.15.6 Line 1-List Output 507

12.15.7 Line 1-Function Parameter 507
12.15.8 Line 1, Line 2-Initialization 533
12.16 Finisher 534
12.16.1 FS-FN adjustment - Center Staple Position 534
12.16.2 FS-FN adjustment - Half-Fold Position 535
12.16.3 FS-FN adjustment - Punch Edge Adj 536
12.16.4 FS-FN adjustment - Punch Regist Loop Size 537
12.16.5 FS-FN adjustment - Finisher Components Test Mode 537
12.16.6 FS-FN adjustment - Load Data 539
12.16.7 FS-FN adjustment - Alignment Plate Position 539
12.16.8 FS-FN adjustment - Paper Alignment Guides W. Adj 539
12.16.9 Punch Option Setting 540
12.16.10 Job Separator 540
12.17 Internet ISW 541
12.17.1 Internet ISW Set 541
12.17.2 HTTP Setting 541
12.17.3 HTTP Setting-Data Input Setting 541
12.17.4 HTTP Setting-Connect Proxy 541
12.17.5 HTTP Setting-Proxy Server 542
12.17.6 HTTP Setting-Proxy Authentication 542
12.17.7 HTTP Setting-Connection Time-Out 542
12.17.8 FTP Setting 542
12.17.9 FTP Setting-Data Input Setting 542
12.17.10 FTP Setting-Connect Proxy 543
12.17.11 FTP Setting-Proxy Server 543
12.17.12 FTP Setting-Connection Setting 543
12.17.13 Forwarding Access Setting-User ID 543
12.17.14 Forwarding Access Setting-Password 544
12.17.15 Forwarding Access Setting-URL 544
12.17.16 Forwarding Access Setting-FileName 544
12.17.17 Download 544
13. ENHANCED SECURITY 545
13.1 List of Enhanced Security 545
13.2 Starting/Exiting 545
13.2.1 Starting procedure 545
13.2.2 Exiting procedure 545
13.3 Enhanced Security 546
13.3.1 CE Password 546

13.3.2 Administrator Password 546
13.3.3 Administrator Feature Level 547
13.3.4 CE Authentication 547
13.3.5 Life Stop Setting 548
13.3.6 NVRAM Data Backup 548
13.3.7 Operation Ban release time 548
13.3.8 Administrator unlocking 549
13.3.9 Engine FW DipSW 549
14. BILLING SETTING 550
14.1 List of billing setting 550
14.2 Starting/Exiting 550
14.2.1 Starting procedure 550
14.2.2 Exiting procedure 550
14.3 Billing Setting 551
14.3.1 Counter Setting 551
14.3.2 Management Function Choice 552
14.3.3 Management Function Choice-Key Counter IF Vendor 552
14.3.4 Management Function Choice-Authentication Device 1 552
14.3.5 Management Function Choice-Authentication Device 2 553
14.3.6 Management Function Choice-Key Counter Only 555
14.3.7 Management Function Choice-Management Device 1 556
14.3.8 Management Function Choice-Management Device 2 556
14.3.9 Management Function Choice-Vendor 1 556
14.3.10 Management Function Choice-Vendor 2 556
14.3.11 Coverage Rate Clear 560
14.3.12 OpenAPI Authentication Management-Restriction Code 561
14.3.13 OpenAPI Authentication Management-Region Code 561
15. CONTENTS TO BE CLEARED BY RESET FUNCTION 562
16. MECHANICAL ADJUSTMENT 563
16.1 Mechanical adjustment of the scanner section 563
16.1.1 Adjustment of the scanner motor belt 563
16.1.2 Positioning of the exposure unit and mirrors unit 564
16.2 Mechanical adjustment of the paper feed section 566
16.2.1 Skew adjustment of the tray 1/2 566
16.2.2 Centering adjustment of the tray 1/2 567
16.2.3 Adjustment of the bypass paper size unit 568

TROUBLESHOOTING

17. JAM DISPLAY 569
17.1 List of JAM code 569
17.1.1 Misfeed display resetting procedure 579
17.2 Sensor layout 580
17.2.1 Main body 580
17.2.2 DF-621 581
17.2.3 PC-109/PC-208 582
17.2.4 PC-409 583
17.2.5 JS-505 584
17.2.6 FS-529 584
17.2.7 FS-527/SD-509/PK-517/JS-603 585
17.3 Solution 586
17.3.1 Initial check items 586
17.3.2 Misfeed at manual bypass feed section 586
17.3.3 Misfeed at tray 1 feed section 587
17.3.4 Misfeed at tray 2 feed section 587
17.3.5 Tray 3 feed section/vertical transport section misfeed 588
17.3.6 Tray 4 feed section/vertical transport section misfeed 588
17.3.7 LCT paper feed section/vertical transport section misfeed 589
17.3.8 Misfeed at vertical transport section 589
17.3.9 Misfeed at image transfer section 590
17.3.10 Misfeed at exit section 590
17.3.11 ADF turnover section 591
17.3.12 ADF paper feed section 591
17.3.13 ADF transport section 592
17.3.14 ADF paper exit section 592
17.3.15 ADF image reading section 593
17.3.16 Code: 72-14 593
17.3.17 Code: 72-15 594
17.3.18 Code: 72-16 594
17.3.19 Code: 72-17 595
17.3.20 Code: 72-18 596
17.3.21 Code: 72-19 596
17.3.22 Code: 72-21 596
17.3.23 Code: 72-22 597
17.3.24 Code: 72-26 597

17.3.25 Code: 72-43 598
17.3.26 Code: 72-81 598
17.3.27 Code: 72-85 598
17.3.28 Code: 72-86 599
17.3.29 Code: 72-87 599
17.3.30 Misfeed at duplex pre-registration section 600
17.3.31 Misfeed at duplex transport section 600
18. MALFUNCTION CODE 601
18.1 Display procedure 601
18.2 List 602
18.3 Solution 603
18.3.1 S-1: CCD gain adjustment failure 603
18.3.2 D-1: Split line detect 603
18.3.3 P-27: Transfer ATVC failure 603
19. TROUBLE CODE 604
19.1 Display procedure 604
19.2 Trouble resetting procedure 604
19.2.1 Trouble resetting procedure by Trouble Reset key 604
19.3 Trouble isolation function 605
19.4 List 605
19.5 Solution 630
19.5.1 C0001: LCT communication error 630
19.5.2 C0202: Tray 1 feeder up/down abnormality 630
19.5.3 C0204: Tray 2 feeder up/down abnormality 631
19.5.4 C0206: Tray 3 lift-up failure 632
19.5.5 C0208: Tray 4 lift-up failure 632
19.5.6 C0209: LCT elevator motor failure 633
19.5.7 C0210: LCT lift failure 633
19.5.8 C0211: Manual feed up/down abnormality 634
19.5.9 C0212: LCT lock release failure 634
19.5.10 C0213: LCT shift gate operation failure 635
19.5.11 C0214: LCT shift failure 635
19.5.12 C0215: LCT shift motor failure 636
19.5.13 C1004: FNS communication error 636
19.5.14 C1081: SD communication error 637
19.5.15 C1113: Center-staple lead edge stopper motor malfunction 637
19.5.16 C1114: Center-staple front adjust drive motor malfunction 638
19.5.17 C1115: Center-staple knife drive motor malfunction 638

19.5.18 C1116: Center-staple transfer motor malfunction 639
19.5.19 C1150: Center-staple rear adjust drive motor malfunction..... 639
19.5.20 C1156: Center-staple paddle roller motor malfunction (trailing edge)..... 640
19.5.21 C1158: Center-staple paddle roller motor malfunction (leading edge) 640
19.5.22 C1181: Malfunctioning of belt up/down movement 641
19.5.23 C1182: Shift motor drive malfunction 642
19.5.24 C1183: Elevate drive malfunction 643
19.5.25 C1190: Alignment plate motor drive malfunction / Alignment plate R drive malfunction..... 645
19.5.26 C1191: Alignment plate F drive malfunction 646
19.5.27 C1194: Leading edge stopper motor drive malfunction 646
19.5.28 C11A1: Tray 2 exit roller pressure/ retraction malfunction / Exit roller pressure/ retraction malfunction..... 647
19.5.29 C11A2: Accommodation roller pressure/ retraction malfunction 648
19.5.30 C11A7: Tray 3 exit roller pressure/ retraction malfunction..... 649
19.5.31 C11B0: Stapler movement drive malfunction 649
19.5.32 C11B2: Staple drive malfunction..... 650
19.5.33 C11B5: Saddle stapler drive malfunction 651
19.5.34 C11C0: Punch motor drive malfunction 651
19.5.35 C11E0: Duplex path switching motor drive malfunction / Finisher route change malfunction 652
19.5.36 C11E1: Upper lower path switching motor drive malfunction..... 653
19.5.37 C11E2: Tray 1 path switching motor drive malfunction 653
19.5.38 C1301: Fan motor drive malfunction 654
19.5.39 C1402: FS NVRAM memory error 654
19.5.40 C2201: Toner bottle motor's turning at abnormal timing 655
19.5.41 C2253: PC motor's failure to turn 655
19.5.42 C2254: PC motor's turning at abnormal timing 655
19.5.43 C2350: Toner suction fan motor's turning at abnormal timing..... 656
19.5.44 C2557: Abnormally low toner density detected TCR sensor 657
19.5.45 C2558: Abnormally high toner density detected TCR sensor 657
19.5.46 C255C: TCR sensor adjustment failure 658
19.5.47 C2564: TCR sensor failure..... 658
19.5.48 C2650: Main backup media access error..... 658
19.5.49 C3421: Fusing heaters trouble (center) 659
19.5.50 C3423: Fusing heaters trouble (edge) 659
19.5.51 C3721: Fusing abnormally high temperature detection (center)..... 659
19.5.52 C3723: Fusing abnormally high temperature detection (edge)..... 659

19.5.53 C3821: Fusing abnormally low temperature detection (center) 660
19.5.54 C3823: Fusing abnormally low temperature detection (edge) 660
19.5.55 C4101: Polygon motor rotation trouble 660
19.5.56 C4501: Laser malfunction 660
19.5.57 C5102: Transport motor's failure to turn 661
19.5.58 C5103: Transport motor's turning at abnormal timing 661
19.5.59 C5351: Power supply cooling fan motor/1's failure to turn 661
19.5.60 C5356: Cooling fan motor's failure to turn 662
19.5.61 C5370: MFP control board cooling fan motor's failure to turn 662
19.5.62 C5501: AC signal abnormality 663
19.5.63 C5601: Engine control malfunction 663
19.5.64 C5602: FPGA configuration error 663
19.5.65 C6102: Drive system home sensor malfunction 664
19.5.66 C6103: Slider over running 664
19.5.67 C6704: Image input time out 664
19.5.68 C6751: CCD clamp/gain adjustment failure 665
19.5.69 C6752: ASIC clock input error 665
19.5.70 C6901: DSC board mount failure 1 666
19.5.71 C6902: DSC board bus check NG1-1 666
19.5.72 C6903: DSC board bus check NG1-2 666
19.5.73 C6F01: Scanner sequence trouble 1 666
19.5.74 C8101: Before reading pressure welding alienation mechanism trouble .. 667
19.5.75 C8107: Glass cleaning mechanism trouble 667
19.5.76 C8302: Cooling fan trouble 668
19.5.77 C9401: Exposure turning on the lamp trouble detection 668
19.5.78 C9402: Exposure turning on the lamp abnormally detection 668
19.5.79 CA051: Standard controller configuration failure 669
19.5.80 CA052: Controller hardware error 669
19.5.81 CA053: Controller start failure 669
19.5.82 CC001: Vendor connection failure 669
19.5.83 CC151: ROM contents error upon startup (MSC) 669
19.5.84 CC152: ROM contents error upon startup (Scanner) 669
19.5.85 CC153: ROM contents error upon startup (PRT) 669
19.5.86 CC155: Finisher ROM error 670
19.5.87 CC156: ADF ROM error 670
19.5.88 CC159: ROM contents error upon startup (DSC1) 670
19.5.89 CC15A: ROM contents error upon startup (DSC2) 670

19.5.90 CC163: ROM contents error (PRT) 671
19.5.91 CC164: ROM contents error (MSC) 671
19.5.92 CC165: ROM contents error (ADF) 671
19.5.93 CC170: Dynamic link error during starting (AP0) 672
19.5.94 CC171: Dynamic link error during starting (AP1) 672
19.5.95 CC172: Dynamic link error during starting (AP2) 672
19.5.96 CC173: Dynamic link error during starting (AP3) 672
19.5.97 CC174: Dynamic link error during starting (AP4) 672
19.5.98 CC180: Dynamic link error during starting (LDR) 672
19.5.99 CC181: Dynamic link error during starting (IBR) 672
19.5.100 CC182: Dynamic link error during starting (IID) 672
19.5.101 CC183: Dynamic link error during starting (IPF) 672
19.5.102 CC184: Dynamic link error during starting (IMY) 672
19.5.103 CC185: Dynamic link error during starting (SPF) 672
19.5.104 CC186: Dynamic link error during starting (OAP) 672
19.5.105 CC190: Outline font load error 672
19.5.106 CC191: Setting parameter load error 673
19.5.107 CC211: Authentication device general error 673
19.5.108 CC212: User validation error 673
19.5.109 CC213: User registration error/card information setting error 674
19.5.110 CC214: User information deletion error 674
19.5.111 CC216: Acquisition failure of the number of trials/Initialize error of number of authentication 674
19.5.112 CD002: JOB RAM save error 675
19.5.113 CD004: Hard disk access error (connection failure) 675
19.5.114 CD00F: Hard disk data transfer error 675
19.5.115 CD020: Hard disk verify error 675
19.5.116 CD010: Hard disk unformat 675
19.5.117 CD011: Hard disk out of specifications mounted 676
19.5.118 CD041 to CD046: HDD command execution error 676
19.5.119 CD047 to CD04B: HDD SCSI library error 676
19.5.120 CD201: File memory mounting error 677
19.5.121 CD202: Memory capacity discrepancy 677
19.5.122 CD203: Memory capacity discrepancy 2 677
19.5.123 CD211: PCI-SDRAM DMA operation failure 677
19.5.124 CD212: Compression/extraction timeout detection 677
19.5.125 CD231: No Fax memory at FAX board mounting 677
19.5.126 CD241: Encryption ASIC setting error 678

19.5.127 CD242: Encryption ASIC mounting error 678
19.5.128 CD261: USB host board failure 678
19.5.129 CD271: i-Option activated and additional memory not installed 678
19.5.130 CD272: i-Option activated and additional memory and HDD not installed 679
19.5.131 CD3##: NVRAM data error 680
19.5.132 CD401: NACK command incorrect 681
19.5.133 CD402: ACK command incorrect 681
19.5.134 CD403: Checksum error 681
19.5.135 CD404: Receiving packet incorrect 681
19.5.136 CD405: Receiving packet analysis error 681
19.5.137 CD406: ACK receiving timeout 681
19.5.138 CD407: Retransmission timeout 681
19.5.139 CE001: Abnormal message queue 681
19.5.140 CE003: Task error 681
19.5.141 CE004: Event error 681
19.5.142 CE005: Memory access error 681
19.5.143 CE006: Header access error 681
19.5.144 CE007: DIMM initialize error 681
19.5.145 CE002: Message and method parameter failure 682
19.5.146 CEEE1: MFP board malfunction 682
19.5.147 CEEE2: Scanner section malfunction 682
19.5.148 CEEE3: Printer control board malfunction 683
19.5.149 CFB00 to CFF5E: Abort code 683
20. FAX TROUBLECODE 684
20.1 ERROR CODES 684
20.2 DIAGNOSTIC CODES 696
20.2.1 Outline 696
20.2.2 Explanation 696
20.3 Error Code (Network fax) 698
20.3.1 Error code of the transmission system 698
20.3.2 Error code of the reception system 700
21. NETWORK ERROR CODE 701
21.1 Display procedure 701
21.2 List 701
22. Open API Related Trouble 713
22.1 Outline 713
22.2 Supported Version 713
22.3 Types of Trouble 713

22.4 Solution 714
23. POWER SUPPLY TROUBLE 715
23.1 Machine is not energized at all (DCPU operation check) 715
23.2 Fusing heaters do not operate 715
23.3 Power is not supplied to option 716
23.3.1 DF-621 716
23.3.2 PC-109/208/409 716
23.3.3 FS-527/529 716
24. IMAGE QUALITY PROBLEM 717
24.1 How to read element data 717
24.1.1 Table number 717
24.1.2 Level history 1 718
24.1.3 Level history 2 719
24.2 How to identify problematic part 720
24.3 Initial check items 720
24.3.1 Initial check items 1 720
24.3.2 Initial check items 2 720
24.4 Solution 721
24.4.1 Scanner system: Blank copy or black copy 721
24.4.2 Scanner system: Low image density or rough image 722
24.4.3 Scanner System: Foggy background 723
24.4.4 Scanner system: Black streaks or bands 724
24.4.5 Scanner system: Black spots 725
24.4.6 Scanner system: White streaks or bands 726
24.4.7 Scanner system: Uneven pitch 727
24.4.8 Printer system: Blank copy or black copy 728
24.4.9 Printer system: Low image density or rough image 729
24.4.10 Printer system: Foggy background 731
24.4.11 Printer system: Black streaks or bands in sub scan direction 732
24.4.12 Printer system: Black streaks or bands in main scan direction 733
24.4.13 Printer system: Black spots 734
24.4.14 Printer system: White streaks or bands in sub scan direction 735
24.4.15 Printer system: White streaks or bands in main scan direction 736
24.4.16 Printer system: Void areas 737
24.4.17 Printer system: Smears on back of paper 738
24.4.18 Printer system: Uneven image density 739
24.4.19 Printer system: Gradation reproduction failure 740
24.4.20 Printer system: Uneven pitch 741

25. IC protector 742
25.1 Outline 742
25.2 IC protector list 742
25.2.1 Main body 742
25.2.2 DF-621 742
25.2.3 PC-109/PC-208 743
25.2.4 PC-409 743
25.2.5 JS-505 744
25.2.6 FS-527 744
25.2.7 SD-509 746
25.2.8 FS-529 747
26. TROUBLESHOOTING OF i-Option 749
26.1 Outline 749
26.1.1 Structure of license management 749
26.1.2 License management information 749
26.2 Error message 750
26.2.1 License management error 750

APPENDIX

27. PARTS LAYOUT DRAWING 751
27.1 Main body 751
27.1.1 Scanner section 751
27.1.2 Front side 752
27.1.3 Back side 753
27.1.4 Left side 755
27.1.5 Right side 756
27.1.6 Duplex/Switchback/Fusing section 757
27.1.7 Manual bypass tray 758
27.1.8 Tray 1 759
27.1.9 Tray 2 760
27.2 DF-621/SP-501 761
27.3 PC-109/PC-208 (Option) 763
27.4 PC-409 (Option) 766
27.5 JS-505 (Option) 769
27.6 FS-527 (Option) 770
27.7 PK-517 (Option) 773
27.8 SD-509 (Option) 774
27.9 JS-603 (Option) 776
27.10 FS-529 (Option) 777

28. CONNECTOR LAYOUT DRAWING 779
28.1 Main body 779
28.1.1 Printer control board (PRCB) 779
28.1.2 MFP board (MFPB) 780
28.1.3 Scanner relay board (REYB/SCAN) 781
28.1.4 DF control board (DFCB) 781
28.1.5 PC Control board (PCCB) 782
28.1.6 FS control board (FSCB) 783
28.1.7 SD drive board (SDDB) 785
29. RELAY CONNECTOR LAYOUT DRAWING 786
29.1 Main body 786
30. TIMING CHART 788
30.1 Main body 788
30.1.1 Timing chart when the main power switch is turned ON 788
30.1.2 Timing chart in color mode 789
30.2 DF-621 790
30.2.1 1-sided mode 790
30.2.2 2-sided mode 791
30.3 FS-527/SD-509/PK-517 792
30.3.1 Shift mode 792
30.3.2 2 flat stitching staples mode 793
30.3.3 Center staples mode 794
30.3.4 Punch mode 795
30.4 JS-603 796
30.4.1 Tray3 paper exit mode 796
30.5 FS-529 797
30.5.1 Shift mode 797
30.5.2 1 flat stitching staple mode 798
30.5.3 2 flat stitching staples mode 799

Blank Page

OUTLINE

1. SYSTEM CONFIGURATION

1/2 System front view

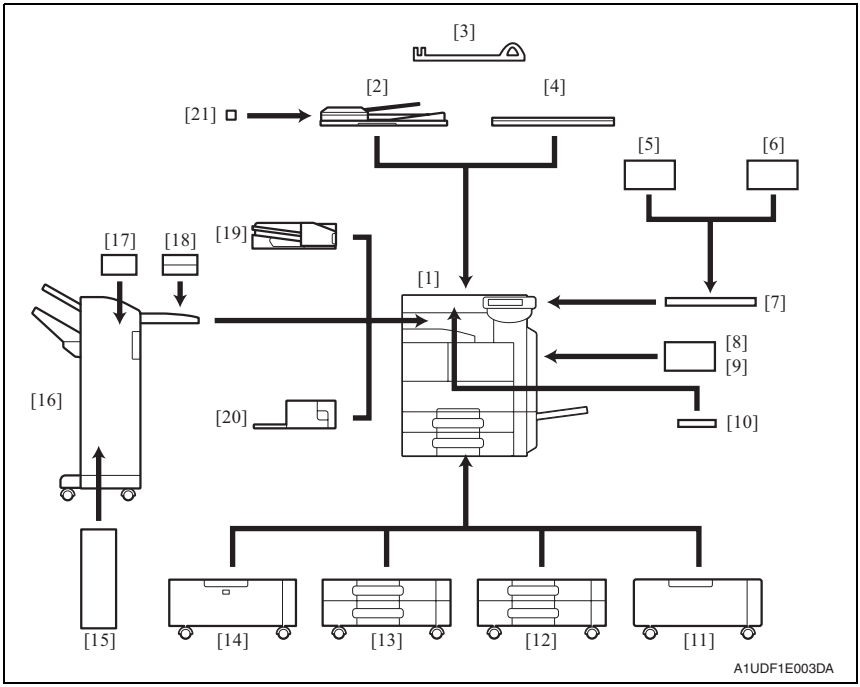

[1]	bizhub 423/363/283/223		[2]	Reverse automatic document feeder *1	DF-621
[3]	Assist handle	AH-101	[4]	Original cover	OC-509
[5]	Authentication unit (biometric type)	AU-102	[6]	Authentication unit (IC card type)	AU-201
[7]	Working table	WT-506	[8]	Local interface kit	EK-604
[9]	Local interface kit	EK-605	[10]	Keyboard holder	KH-101
[11]	Desk	DK-508	[12]	Paper feed cabinet	PC-109
[13]	Paper feed cabinet	PC-208	[14]	Paper feed cabinet	PC-409
[15]	Saddle stitcher	SD-509	[16]	Finisher	FS-527
[17]	Punch kit	PK-517	[18]	Job separator	JS-603
[19]	Finisher	FS-529	[20]	Job separator	JS-505
[21]	Stamp unit	SP-501			

*1: Standard equipment only on bizhub 423, and bizhub 363 for North America and Europe.

NOTE

- **Use the desk or the paper feed cabinet without fail when installing on the floor in order to keep the function and quality of the unit.**

2/2 System rear view

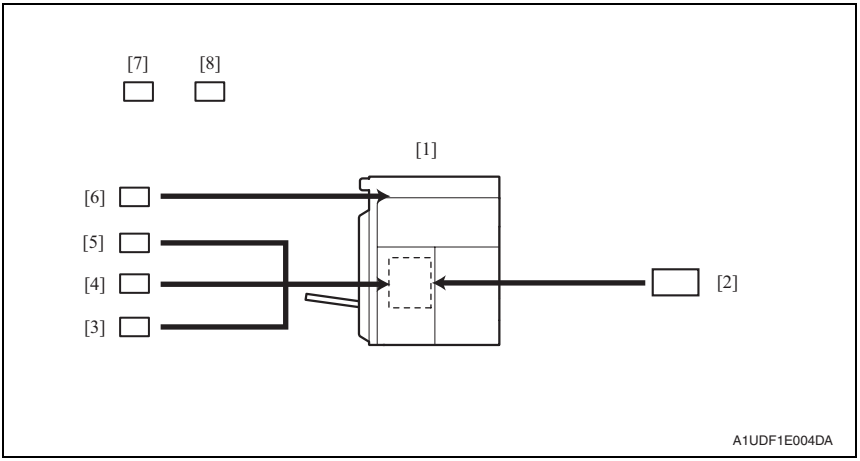

[1]	bizhub 423/363/283/223		[2]	Fax kit	FK-508
[3]	Security kit	SC-507	[4]	Hard Disk *1	HD-516
[5]	Mount kit	MK-726	[6]	Key counter kit	KIT-1
[7]	i-Option	LK-101 v2/102/103 v2/105	[8]	Upgrade kit	UK-203

*1: Being standard or optional depends on each marketing area and machine model.
For details, see the following list.

Marketing area / Model	North America	Europe	Others
bizhub 423	Standard	Standard	Standard
bizhub 363	Standard	Standard	Option
bizhub 283	Option	Option	Option
bizhub 223	Option	Option	Option

2. PRODUCT SPECIFICATIONS

2.1 Type

Type	Desktop/console *1 scanner/printer
Printing process	Laser electrostatic printing system
PC drum type	OPC drum: KM-1
Scanning density	600 dpi in main scanning direction x 600 dpi in sub scanning direction
Exposure lamp	White rare-gas fluorescent lamp 30 W
Platen	Stationary (mirror scan)
Original scanning	Mirror scanning CCD optical system * Sheet through system when DF-621 is used
Reading device	CCD sensor
Registration	Rear left edge
Paper feeding separation system	Manual bypass : Small roller separation system with torque limiter Tray 1 : Roller separation system with pick-up mechanism Tray 2 : Roller separation system with pick-up mechanism
Exposure system	• 1 beam LD exposing system • Polygon mirror scan system
Exposure density	Equivalent to 1800 dpi in main scanning direction x 600 dpi in sub scanning direction
Developing system	Dry 2 components developing method, HMT developing system
Charging system	DC comb electrode scorotron system
Neutralizing system	Pre-charging + Red LED system
Image transfer system	Roller image transfer system
Paper separating system	Neutralization needle bias superimposed voltage, separating claws and combination of curvature system
Fusing system	Roller fusing
Heating system	Halogen lamp

*1: Only when the optional paper feed cabinet/desk is installed.

2.2 Functions

Types of original		Sheets, books, and three-dimensional objects	
Max. original size		A3 or 11 x 17	
Max. original weight		Max. 2 kg	
Multiple copies		1 to 9999	
Warm-up time (at ambient temperature of 23° C/73.4° F and rated source voltage)	When the sub power switch is turned ON at any timing while the main power switch remains ON for a predetermined period of time or more. 12 sec. or less		
	When the main power switch is turned ON during the sub power switch being ON. When hard disk is installed: 30 sec. or less When hard disk is not installed: 25 sec. or less		
Image loss	Copy	Leading edge: 4.2 mm (3/16 inch), Trailing edge: 3 mm (1/8 inch), Rear edge: 3 mm (1/8 inch), Front edge: 3 mm (1/8 inch)	
	PC print	Leading edge: 4.2 mm (3/16 inch), Trailing edge: 4.2 mm (3/16 inch), Rear edge: 4.2 mm (3/16 inch), Front edge: 4.2 mm (3/16 inch)	
First copy time	(Tray1/2 A4 or 8 $^1/_2$ x 11, full size)		
	bizhub 423/363	3.6 sec. or less	
	bizhub 283/223	4.2 sec. or less	
Processing speed	bizhub 423/363	173.0 mm/s	
	bizhub 283/223	140.0 mm/s	
Copying/printing speed for multi-copy/print cycle (A4 or 8 $^1/_2$ x 11)	bizhub 423	1-sided: plain paper 42 copies/min (A4), thick 13 copies/min(A4) 2-sided: 42 copies/min (A4)	
		1-sided: plain paper 41.5 copies/min (8 $^1/_2$ x 11), thick 13 copies/min (8 $^1/_2$ x 11) 2-sided: 41.5 copies/min (8 $^1/_2$ x 11)	
	bizhub 363	1-sided: plain paper 36 copies/min, thick 12.5 copies/min 2-sided: 36 copies/min	
	bizhub 283	1-sided: plain paper 28 copies/min, thick 10 copies/min 2-sided: 28 copies/min	
	bizhub 223	1-sided: plain paper 22 copies/min, thick 9 copies/min 2-sided: 22 copies/min	
Fixed zoom ratios	Full size	x1.000	
	Reduction	Metric area	x0.500, x0.707, x0.816, x0.866
		Inch area	x0.500, x0.647, x0.733, x0.785
	Enlargement	Metric area	x1.154, x1.224, x1.414, x2.000
		Inch area	x1.214, x1.294, x1.545, x2.000
	Zoom ratios memory	3 memories	
Variable zoom ratios	×0.250 to ×4.000	in 0.001 increments	

Paper size	Tray 1	Metric area	A3 to B5/B5S, A5S, 16K, 8K
		Inch area	11 x 17 to 8 $^1/_2$ x 11, 8 $^1/_2$ x 11S, 5 $^1/_2$ x 8 $^1/_2$S, 8 x 13
	Tray 2	Metric area	A3 to B5/B5S,16K, 8K
		Inch area	12 x 18 to 8 $^1/_2$ x 11, 8 $^1/_2$ x 11S, 5 $^1/_2$ x 8 $^1/_2$S, 8 x 13
	Manual bypass tray	Metric area	A3 to A6S, A5, 16K/16KS, 8K
		Inch area	12 x 18 to 5 $^1/_2$ x 8 $^1/_2$, 5 $^1/_2$ x 8 $^1/_2$S, 4 x 6S, 8 x 13
Copy exit tray capacity	Plain paper	250 sheets	
	Thick paper	10 sheets	
	OHP film	1 sheet	
External memory function	Supported external memory devices	• USB flash memory compatible with the USB (1.1/2.0) interface • Formatted to the FAT32 file system • Memory capacity of 2GB or less recommended (Possible to be non-operational for 4 GB or more) • Not including security features (Possible to turn OFF security features) • A USB flash memory that appears as multiple drives on a computer cannot be used.	

2.3 Paper

Type		Paper source (maximum tray capacity)		
		Tray 1	Tray 2	Manual bypass tray
Copy paper type	Plain paper (60 to 90 g/m² / 16 to 24 lb)	❍ (500 sheets)	❍ (500 sheets)	❍ (150 sheets)
	Translucent paper	—	—	—
	OHP film (crosswise feeding only)	—	—	❍ (20 sheets)
	Thick paper 1 (91 to 150 g/m² / 24.25 to 40 lb)	—	—	
	Thick paper 2 (151 to 210 g/m² / 40.25 to 55.75 lb)	—	—	
	Postcards	—	—	
	Envelopes	—	—	❍ (10 sheets)
	Labels	—	—	❍ (20 sheets)
Copy paper dimensions	Width	139.7 to 297 mm 5 1/2 to 11 3/4 inch	139.7 to 297 mm 5 1/2 to 11 3/4 inch	90 to 297 mm 3 1/2 to 11 3/4 inch
	Length	182 to 431.8 mm 7 1/4 to 17 inch	182 to 431.8 mm 7 1/4 to 17 inch	139.7 to 431.8 mm 5 1/2 to 17 inch

Automatic duplex unit : Only the plain paper weighing 60 to 90 g/m² (16 to 24 lb) are reliably fed.

Precautions regarding the use of paper
Do not use the following types of paper. Not observing these precautions may lead to reduced print quality, a paper jam or a damage to the machine.

- **OHP film that have already been fed through the machine (even if they are still blank)**
- **Paper that has been printed on with a heat-transfer printer or an inkjet printer**
- **Folded, curled, wrinkled, or torn paper**
- **Paper that has been left unwrapped for a long period of time**
- **Damp paper, perforated paper, or paper with punched holes**
- **Extremely smooth or extremely rough paper, or paper with an uneven surface**
- **Treated paper such as carbon-backed paper, thermal paper, pressure-sensitive paper, or iron-on transfer paper**
- **Paper that has been decorated with foil or embossing**
- **Paper of a non-standard shape (paper that is not rectangular)**
- **Paper that is bound with glue, staples or paper clips**
- **Paper with labels attached**
- **Paper with ribbons, hooks, buttons, etc., attached**

2.4 Materials

Parts name		Number of prints (specification value)	Type name
Toner bottle	bizhub 423/363	25,000 prints *1	TN414
	bizhub 283/223	17,500 prints *1	TN217
Developer	bizhub 423	120,000 prints	DV411
	bizhub 363	110,000 prints	
	bizhub 283	100,000 prints	
	bizhub 223	80,000 prints	
Drum unit	bizhub 423	120,000 prints	DR411
	bizhub 363	110,000 prints	
	bizhub 283	100,000 prints	
	bizhub 223	80,000 prints	
Developing unit	bizhub 423	480,000 prints	A1UD R711 XX
	bizhub 363	440,000 prints	
	bizhub 283	400,000 prints	
	bizhub 223	320,000 prints	

2.5 Print volume

- bizhub 423

Europe	Average	10,700 prints/month
	Maximum	60,000 prints/month
Except for Europe	Average	8,300 prints/month
	Maximum	60,000 prints/month

- bizhub 363

Europe	Average	7,900 prints/month
	Maximum	48,000 prints/month
Except for Europe	Average	6,100 prints/month
	Maximum	48,000 prints/month

- bizhub 283

Europe	Average	4,800 prints/month
	Maximum	28,000 prints/month
Except for Europe	Average	3,700 prints/month
	Maximum	28,000 prints/month

- bizhub 223

Europe	Average	2,900 prints/month
	Maximum	19,000 prints/month
Except for Europe	Average	2,300 prints/month
	Maximum	19,000 prints/month

2.6 Machine specifications

Power requirements	Voltage:	AC 100 V, 120 V, 127 V, 220-240 V	
	Current:	100 V	15 A
		110 V	15 A
		120 V	12 A
		127 V	12 A
		230 V	7 A
	Frequency:	50/60 Hz ± 3 Hz	
Max power consumption		1,500 W or less	
Dimensions	ADF is installed	623 mm *1 (W) x 799 mm *2 (D) x 816 mm (H) 24.5 inch *1 (W) x 31.5 inch *2 (D) x 32.1 inch (H)	
	ADF is not installed	623 mm *1 (W) x 794 mm *2 (D) x 700 mm (H) *3 24.5 inch *1 (W) x 31.25 inch *2 (D) x 27.5 inch (H) *3	
Space requirements		1,634 mm (W) x 895 mm (D) x 1,141 mm (H) *4 64.3 inch (W) x 35.2 inch (D) x 44.9 inch (H) *4	
Weight	bizhub 423/363	Approx. 78 kg / 172 lb (except for developer and toner bottle)	
	bizhub 283/223	Approx. 66 kg / 145.5 lb (except for developer and toner bottle)	

*1: Width when the manual bypass tray is closed
*2: Including the control panel.
*3: Height up to the original glass
*4: When the sub tray of the finisher FS-527 and the paper feed tray is slide out, and ADF is open.

2.7 Operating environment

Temperature	10 to 30° C / 50 to 86° F (with a fluctuation of 10° C / 18° F or less per hour)
Humidity	15 to 85% (Relative humidity with a fluctuation of 10%/h)
Levelness	Difference between front and back, right and left should be 1 degree or under.

2.8 Print functions

Type	Built-in printer controller	
RAM	2 GB (shared with the main body)	
HDD	250 GB (shared with the main body) * Optional in some models and marketing areas.	
SSD	1 GB	
Interface	Standard	Ethernet (1000Base-T/100Base-TX/10Base-T) USB2.0/1.1
	Option	USB 2.0
Frame type	Ethernet 802.2, Ethernet 802.3, Ethernet II, Ethernet SNAP	
Supported protocols	TCP/IP (IPv4/IPv6), BOOTP, ARP, ICMP, DHCP, DHCPv6, AutoIP, SLP, SNMP, FTP, LPR/LPD, RAW Socket, SMB over TCP/IP, IPP, HTTP, POP, SMTP, LDAP, NTP, SSL, IPX/SPX, AppleTalk, Bonjour, NetBEUI, WebDAV, DPWS, S/MIME, IPsec, DNS, DynamicDNS, LLMNR, LLTD	
Printer language	PCL5c/6 Emulation PCL XL ver. 2.1 Emulation PostScript 3 Emulation (3016) XPS ver.1.0	
Print resolution	Equivalent to 1,800 dpi in main scanning direction × 600 dpi in sub scanning direction	
Printer fonts	PCL Latin 80 Fonts Postscript 3 Emulation Latin 137 Fonts	
Supported computer	IBM PC/AT compatible machine, Macintosh (PowerPC/Intel processor: Only MacOS X 10.4/10.5 for Intel processor)	
Printer driver	PCL KONICAMINOLTA driver (PCL driver)	Windows NT Workstation Version 4.0 (SP6 or later) Windows NT Server Version 4.0 (SP6 or later) Windows 2000 Professional (SP4 or later) Windows 2000 Server (SP3 or later) Windows XP Home Edition (SP1 or later) Windows XP Professional (SP1 or later) Windows Server 2003, Standard Edition (SP1 or later) Windows Server 2003, Enterprise Edition (SP1 or later) Windows Server 2003 R2, Standard Edition Windows Server 2003 R2, Enterprise Edition Windows XP Professional x64 Edition Windows Server 2003, Standard x64 Edition Windows Server 2003, Enterprise x64 Edition Windows Server 2003 R2, Standard x64 Edition Windows Server 2003 R2, Enterprise x64 Edition Windows Vista Business * Windows Vista Enterprise * Windows Vista Home Basic * Windows Vista Home Premium * Windows Vista Ultimate * Windows Server 2008 Standard * Windows Server 2008 Enterprise * Windows 7 Home Premium/Professional/Ultimate * * 32 bits (x86)/64 bits (x64) environment are supported

Printer driver	PostScript KONICAMI-NOLTA driver (PS driver)	Windows 2000 Professional (SP4 or later) Windows 2000 Server (SP3 or later) Windows XP Home Edition (SP1 or later) Windows XP Professional (SP1 or later) Windows Server 2003, Standard Edition (SP1 or later) Windows Server 2003, Enterprise Edition (SP1 or later) Windows Server 2003 R2, Standard Edition Windows Server 2003 R2, Enterprise Edition Windows XP Professional x64 Edition Windows Server 2003, Standard x64 Edition Windows Server 2003, Enterprise x64 Edition Windows Server 2003 R2, Standard x64 Edition Windows Server 2003 R2, Enterprise x64 Edition Windows Vista Business * Windows Vista Enterprise * Windows Vista Home Basic * Windows Vista Home Premium * Windows Vista Ultimate * Windows Server 2008 Standard * Windows Server 2008 Enterprise * Windows 7 Home Premium/Professional/Ultimate * * 32 bits (x86)/64 bits (x64) environment are supported
	XPS KONICAMINOLTA driver (XPS driver)	Windows Vista Business * Windows Vista Enterprise * Windows Vista Home Basic * Windows Vista Home Premium * Windows Vista Ultimate * Windows Server 2008 Standard * Windows Server 2008 Enterprise * Windows 7 Home Premium/Professional/Ultimate * * 32 bits (x86)/64 bits (x64) environment are supported
	PostScript PPD driver (PS-PPD)	Mac OS 9.2 or later Mac OS X 10.2.8/10.3/10.4/10.5

Printer driver	Fax driver	Windows NT Workstation Version 4.0 (SP6 or later) Windows NT Server Version 4.0 (SP6 or later) Windows 2000 Professional (SP4 or later) Windows 2000 Server (SP3 or later) Windows XP Home Edition (SP1 or later) Windows XP Professional (SP1 or later) Windows Server 2003, Standard Edition (SP1 or later) Windows Server 2003, Enterprise Edition (SP1 or later) Windows Server 2003 R2, Standard Edition Windows Server 2003 R2, Enterprise Edition Windows XP Professional x64 Edition Windows Server 2003, Standard x64 Edition Windows Server 2003, Enterprise x64 Edition Windows Server 2003 R2, Standard x64 Edition Windows Server 2003 R2, Enterprise x64 Edition Windows Vista Business * Windows Vista Enterprise * Windows Vista Home Basic * Windows Vista Home Premium * Windows Vista Ultimate * Windows Server 2008 Standard * Windows Server 2008 Enterprise * Windows 7 Home Premium/Professional/Ultimate * * 32 bits (x86)/64 bits (x64) environment are supported

2.9 Scan functions

Scanner	Scannable range		Same as the copier (Max. 11 x 17: inch area, A3: metric area)
	Scan speed (A4 or 8 1/2 x 11, DF scan, 1-side original Resolution 300 dpi)		70 pages/min
	Functions		Scan to E-mail, Scan to FTP, Scan to SMB, Scan to WebDAV, Scan to BOX
	Scanning resolution		200/300/400/600 dpi
TWAIN	Driver		TWAIN Driver, HDD TWAIN Driver
	Supported operating systems		Windows 2000 Professional (SP4) Windows XP Home Edition (SP3) Windows XP Professional (SP3) Windows NT 4.0 (SP6a) Windows Vista Home Basic (SP1) Windows Vista Home Premium (SP1) Windows Vista Business (SP1) Windows Vista Enterprise (SP1) Windows Vista Ultimate (SP1)
	PC		Conform to the specification of operating system
	Required memory		Conform to the specification of operating system
	Network		Computer to which TCP/IP protocol is correctly set
	Hard disk		Required 20 MB or more disk space
SMB	Supported operating systems	Windows	Windows NT4.0 Server/Workstation Windows 2000 Server/Professional Windows XP Home/Professional Windows Server 2003 each edition Windows Vista each edition Windows Server 2008 DFS function is supported only in the environment that structured with the following Windows server operating systems. • Windows 2000 Server each edition • Windows Server 2003 each edition • Windows Server 2008 Direct hosting function apply to the following operating systems. • Windows 2000 • Windows XP • Windows Vista (IPv6 function is available only when the Windows Vista is installed.)
		Samba *	2.2.x 3.x
		Novell Netware	Netware 6.5 (SP6 or later)

*: This machine supports Unicode. However, if the operating system used in a destination computer does not support Unicode (2 and 3 byte characters), SMB transmission may be unavailable. If SMB transmission is unsuccessful, specify the shared name of the destination folder using ASCII codes (one-byte alphanumeric characters).

NOTE

- **These specifications are subject to change without notice.**

Blank Page

MAINTENANCE

3. PERIODICAL MAINTENANCE ITEMS

3.1 Concept of periodical maintenance

- Cleaning/replacement cycle for each maintenance item of main body/options can be evaluated with the total counter or each life counter value of [Service Mode] → [Counter] → [Life].

3.1.1 Main body (bizhub 423)

A. Periodical maintenance 1 (total counter; every 60,000 counts)

No.	Section	Description/part name	Qt.	Clean	Check	Lubrication	Replace	Descriptions
1	Overall	Paper feed and image conditions	—		●			
2		Appearance	—	●	●			
3	Conveyance section	Timing roller	—	●				
4	Duplex section	Duplex transport roller	—	●				

B. Periodical maintenance 2 (life counter; every 120,000 counts)

No.	Section	Description/part name	Qt.	Clean	Check	Lubrication	Replace	Descriptions
1	Processing section	Toner filter (Developing unit)	1				●	
2		Drum unit	1					
3		Developer	1					

C. Periodical maintenance 3 (life counter; every 150,000 counts)

No.	Section	Description/part name	Qt.	Clean	Check	Lubrication	Replace	Descriptions
1	Conveyance section	Paper dust remover	1				●	
2	Transfer section	Transfer roller unit	1				●	
3	Processing section	Ozone filter	1				●	

D. Periodical maintenance 4 (life counter; every 200,000 counts)

No.	Section	Description/part name	Qt.	Clean	Check	Lubrication	Replace	Descriptions
1	Paper feed section	Manual bypass tray feed roller	1				●	
2		Manual bypass tray separation roller assy	1				●	

E. Periodical maintenance 5 (life counter; every 300,000 counts)

No.	Section	Description/part name	Qt.	Clean	Check	Lubri-cation	Replace	Descrip-tions
1	Paper feed section	Tray 1 pick-up roller	1				●	
2		Tray 1 feed roller	1				●	
3		Tray 1 separation roller assy	1				●	
4		Tray 2 pick-up roller	1				●	
5		Tray 2 feed roller	1				●	
6		Tray 2 separation roller assy	1				●	

F. Periodical maintenance 6 (life counter; every 450,000 counts)

No.	Section	Description/part name	Qt.	Clean	Check	Lubri-cation	Replace	Descrip-tions
1	Fusing section	Fusing unit	1				●	

G. Periodical maintenance 7 (life counter; every 480,000 counts)

No.	Section	Description/part name	Qt.	Clean	Check	Lubri-cation	Replace	Descrip-tions
1	Processing section	Developing unit	1				●	
2		Toner filter (Main body)	1				●	

H. Periodical maintenance 8 (life counter; every 900,000 counts)

No.	Section	Description/part name	Qt.	Clean	Check	Lubri-cation	Replace	Descrip-tions
1	Conveyance section	Timing roller bearing	4				●	
2		Timing roller gear	2				●	

3.1.2 Main body (bizhub 363)

A. Periodical maintenance 1 (total counter; every 60,000 counts)

No.	Section	Description/part name	Qt.	Clean	Check	Lubri-cation	Replace	Descrip-tions
1	Overall	Paper feed and image con-ditions	—		●			
2		Appearance	—	●	●			
3	Conveyance section	Timing roller	—	●				
4	Duplex section	Duplex transport roller	—	●				

B. Periodical maintenance 2 (life counter; every 121,000 counts)

No.	Section	Description/part name	Qt.	Clean	Check	Lubri-cation	Replace	Descrip-tions
1	Processing section	Toner filter (Developing unit)	1				●	
2		Drum unit	1					
3		Developer	1					

C. Periodical maintenance 3 (life counter; every 150,000 counts)

No.	Section	Description/part name	Qt.	Clean	Check	Lubri-cation	Replace	Descrip-tions
1	Conveyance section	Paper dust remover	1				●	
2	Transfer section	Transfer roller unit	1				●	
3	Processing section	Ozone filter	1				●	

D. Periodical maintenance 4 (life counter; every 200,000 counts)

No.	Section	Description/part name	Qt.	Clean	Check	Lubri-cation	Replace	Descrip-tions
1	Paper feed section	Manual bypass tray feed roller	1				●	
2		Manual bypass tray separation roller assy	1				●	

E. Periodical maintenance 5 (life counter; every 300,000 counts)

No.	Section	Description/part name	Qt.	Clean	Check	Lubri-cation	Replace	Descrip-tions
1	Paper feed section	Tray 1 pick-up roller	1				●	
2		Tray 1 feed roller	1				●	
3		Tray 1 separation roller assy	1				●	
4		Tray 2 pick-up roller	1				●	
5		Tray 2 feed roller	1				●	
6		Tray 2 separation roller assy	1				●	

F. Periodical maintenance 6 (life counter; every 450,000 counts)

No.	Section	Description/part name	Qt.	Clean	Check	Lubri-cation	Replace	Descrip-tions
1	Fusing section	Fusing unit	1				●	

G. Periodical maintenance 7 (life counter; every 440,000 counts)

No.	Section	Description/part name	Qt.	Clean	Check	Lubrication	Replace	Descriptions
1	Processing section	Developing unit	1				●	
2		Toner filter (Main body)	1				●	

H. Periodical maintenance 8 (life counter; every 900,000 counts)

No.	Section	Description/part name	Qt.	Clean	Check	Lubrication	Replace	Descriptions
1	Conveyance section	Timing roller bearing	4				●	
2		Timing roller gear	2				●	

3.1.3 Main body (bizhub 283)

A. Periodical maintenance 1 (total counter; every 60,000 counts)

No.	Section	Description/part name	Qt.	Clean	Check	Lubrication	Replace	Descriptions
1	Overall	Paper feed and image conditions	—		●			
2		Appearance	—	●	●			
3	Conveyance section	Timing roller	—	●				
4	Duplex section	Duplex transport roller	—	●				

B. Periodical maintenance 2 (life counter; every 100,000 counts)

No.	Section	Description/part name	Qt.	Clean	Check	Lubrication	Replace	Descriptions
1	Processing section	Toner filter (Developing unit)	1				●	
2		Drum unit	1					
3		Developer	1					

C. Periodical maintenance 3 (life counter; every 150,000 counts)

No.	Section	Description/part name	Qt.	Clean	Check	Lubrication	Replace	Descriptions
1	Conveyance section	Paper dust remover	1				●	
2	Transfer section	Transfer roller unit	1				●	
3	Processing section	Ozone filter	1				●	

D. Periodical maintenance 4 (life counter; every 200,000 counts)

No.	Section	Description/part name	Qt.	Clean	Check	Lubri-cation	Replace	Descrip-tions
1	Paper feed section	Manual bypass tray feed roller	1				●	
2		Manual bypass tray separation roller assy	1				●	

E. Periodical maintenance 5 (life counter; every 300,000 counts)

No.	Section	Description/part name	Qt.	Clean	Check	Lubri-cation	Replace	Descrip-tions
1	Paper feed section	Tray 1 pick-up roller	1				●	
2		Tray 1 feed roller	1				●	
3		Tray 1 separation roller assy	1				●	
4		Tray 2 pick-up roller	1				●	
5		Tray 2 feed roller	1				●	
6		Tray 2 separation roller assy	1				●	

F. Periodical maintenance 6 (life counter; every 420,000 counts)

No.	Section	Description/part name	Qt.	Clean	Check	Lubri-cation	Replace	Descrip-tions
1	Fusing section	Fusing unit	1				●	

G. Periodical maintenance 7 (life counter; every 400,000 counts)

No.	Section	Description/part name	Qt.	Clean	Check	Lubri-cation	Replace	Descrip-tions
1	Processing section	Developing unit	1				●	
2		Toner filter (Main body)	1				●	

H. Periodical maintenance 8 (life counter; every 900,000 counts)

No.	Section	Description/part name	Qt.	Clean	Check	Lubri-cation	Replace	Descrip-tions
1	Conveyance section	Timing roller bearing	4				●	
2		Timing roller gear	2				●	

3.1.4 Main body (bizhub 223)

A. Periodical maintenance 1 (total counter; every 60,000 counts)

No.	Section	Description/part name	Qt.	Clean	Check	Lubri-cation	Replace	Descrip-tions
1	Overall	Paper feed and image con-ditions	—		●			
2		Appearance	—	●	●			
3	Conveyance section	Timing roller	—	●				
4	Duplex section	Duplex transport roller	—	●				

B. Periodical maintenance 2 (life counter; every 80,000 counts)

No.	Section	Description/part name	Qt.	Clean	Check	Lubri-cation	Replace	Descrip-tions
1	Processing section	Toner filter (Developing unit)	1				●	
2		Drum unit	1					
3		Developer	1					

C. Periodical maintenance 3 (life counter; every 150,000 counts)

No.	Section	Description/part name	Qt.	Clean	Check	Lubri-cation	Replace	Descrip-tions
1	Conveyance section	Paper dust remover	1				●	
2	Transfer section	Transfer roller unit	1				●	
3	Processing section	Ozone filter	1				●	

D. Periodical maintenance 4 (life counter; every 200,000 counts)

No.	Section	Description/part name	Qt.	Clean	Check	Lubri-cation	Replace	Descrip-tions
1	Paper feed section	Manual bypass tray feed roller	1				●	
2		Manual bypass tray separation roller assy	1				●	

E. Periodical maintenance 5 (life counter; every 300,000 counts)

No.	Section	Description/part name	Qt.	Clean	Check	Lubri-cation	Replace	Descrip-tions
1	Paper feed section	Tray 1 pick-up roller	1				●	
2		Tray 1 feed roller	1				●	
3		Tray 1 separation roller assy	1				●	
4		Tray 2 pick-up roller	1				●	
5		Tray 2 feed roller	1				●	
6		Tray 2 separation roller assy	1				●	

F. Periodical maintenance 6 (life counter; every 340,000 counts)

No.	Section	Description/part name	Qt.	Clean	Check	Lubri-cation	Replace	Descrip-tions
1	Fusing section	Fusing unit	1				●	

G. Periodical maintenance 7 (life counter; every 320,000 counts)

No.	Section	Description/part name	Qt.	Clean	Check	Lubri-cation	Replace	Descrip-tions
1	Processing section	Developing unit	1				●	
2		Toner filter (Main body)	1				●	

H. Periodical maintenance 8 (life counter; every 900,000 counts)

No.	Section	Description/part name	Qt.	Clean	Check	Lubri-cation	Replace	Descrip-tions
1	Conveyance section	Timing roller bearing	4				●	
2		Timing roller gear	2				●	

3.1.5 DF-621

A. Periodical maintenance 1 (life counter; every 50,000 counts)

No.	Section	Description/part name	Qt.	Clean	Check	Lubri-cation	Replace	Descrip-tions
1	Overall	Paper feed and image conditions	—		●			
2		Appearance	—	●	●			
3	Paper feed section	Pick-up roller	—	●				
4		Feed roller	—	●				
5		Separation roller	—	●				
6	Conveyance section	Roller and rolls	—	●				
7	Scanning section	Cleaning shaft	—	●				
8	Paper feed section	Reflective sensor section	—	●				

B. Periodical maintenance 2 (life counter; every 200,000 counts)

No.	Section	Description/part name	Qt.	Clean	Check	Lubri-cation	Replace	Descrip-tions
1	Paper feed section	Pick-up roller	2				●	*1
2		Feed roller	1				●	
3		Separation roller assy	1				●	

*1: Replace those three parts at the same time.

3.1.6 PC-109/PC-208/PC-409

A. Periodical maintenance 1 (life counter; every 300,000 counts)

No.	Section	Description/part name	Qt.	Clean	Check	Lubri-cation	Replace	Descrip-tions
1	Overall	Paper feed and image conditions	—		●			
2		Appearance	—	●	●			
3	Paper feed section	Pick-up roller	1				●	*1
4		Feed roller	1				●	
5		Separation roller	1				●	

*1: Replace those three parts at the same time.

3.1.7 JS-505

A. Periodical maintenance 1 (life counter; every 300,000 counts)

No.	Section	Description/part name	Qt.	Clean	Check	Lubri-cation	Replace	Descrip-tions
1	Overall	Paper feed and image con-ditions	—		●			
2		Appearance	—	●	●			
3	Conveyance section	Roller and rolls	—	●				

3.1.8 JS-603/FS-527/SD-509/PK-517

A. Periodical maintenance 1 (total counter; every 300,000 counts)

No.	Section	Description/part name	Qt.	Clean	Check	Lubri-cation	Replace	Descrip-tions
1	Overall	Paper feed and image con-ditions	—		●			
2		Appearance	—	●	●			
3	Conveyance section	Roller and rolls	—	●				
4		Paddles	—	●				

B. Periodical maintenance 2 (life counter; every 800,000 counts)

No.	Section	Description/part name	Qt.	Clean	Check	Lubri-cation	Replace	Descrip-tions
1	FS-527 Conveyance section	Upper paddle	2				●	
2		Lower paddle	9				●	

3.1.9 FS-529

A. Periodical maintenance 1 (total counter; every 300,000 counts)

No.	Section	Description/part name	Qt.	Clean	Check	Lubri-cation	Replace	Descrip-tions
1	Overall	Paper feed and image con-ditions	—		●			
2		Appearance	—	●	●			
3	Conveyance section	Roller and rolls	—	●				

3.2 Periodical replacement parts list

- To ensure that the machine produces good copies and to extend its service life, it is recommended that the maintenance jobs described in this schedule be carried out as instructed.
- Replace with reference to the numeric values displayed on the total counter, the life counter or the messages displayed on the control panel.
- Maintenance conditions are based on the case of A4 or 8 $^1/_2$ x 11, standard mode and low power mode OFF.

		B/W
*Standard mode	bizhub 423	4 pages per job
	bizhub 363	4 pages per job
	bizhub 283	3 pages per job
	bizhub 223	2 pages per job

3.2.1 Main body

Classification	Parts name			Parts No.	Qt.	Replacing cycle	Descriptions	Ref. page
Manual bypass tray	Manual bypass tray feed roller			A00F 6232 XX	1	200,000	*2 *4	P.45
	Manual bypass tray separation roller assy			4034 0151 XX	1	200,000		P.46
Tray 1	Tray 1 pick-up roller			A00J 5636 XX	1	300,000	*2 *4	P.48
	Tray 1 feed roller				1	300,000		
	Tray 1 separation roller				1	300,000		P.51
Tray 2	Tray 2 pick-up roller			A00J 5636 XX	1	300,000	*2 *4	P.53
	Tray 2 feed roller				1	300,000		
	Tray 2 separation roller				1	300,000		P.53
Conveyance section	Timing roller bearing			1164 3549 XX	4	900,000		P.54
	Timing roller gear 1			1164 3508 XX	1	900,000		
	Timing roller gear 2			1164 3515 XX	1	900,000		
	Paper dust remover			4040 0778 XX	1	150,000	*2	P.56
Fusing section	Fusing unit	bizhub 423/363	100V	A1UD R708 XX	1	450,000	*3	P.57
			120V	A1UD R709 XX				
			200V	A1UD R710 XX				
		bizhub 283	100V	A1UD R708 XX	1	420,000		
			120V	A1UD R709 XX				
			200V	A1UD R710 XX				
		bizhub 223	100V	A1UD R708 XX	1	340,000		
			120V	A1UD R709 XX				
			200V	A1UD R710 XX				
Transfer section	Transfer roller unit			A1UD R705 XX	1	150,000	*2	P.44

Classification	Parts name		Parts No.	Qt.	Replacing cycle	Descriptions	Ref. page
Processing section	Drum unit	bizhub 423	–	1	120,000	*3 *5	P.32
		bizhub 363	–	1	110,000		
		bizhub 283	–	1	100,000		
		bizhub 223	–	1	80,000		
	Developer	bizhub 423	–	1	120,000	*3	P.38
		bizhub 363	–	1	110,000		
		bizhub 283	–	1	100,000		
		bizhub 223	–	1	80,000		
Processing section	Developing unit	bizhub 423	A1UD R711 XX	1	480,000	*3 *6	P.35
		bizhub 363		1	440,000		
		bizhub 283		1	400,000		
		bizhub 223		1	320,000		
	Toner filter (Developing unit)	bizhub 423	A1UD 3707 XX	1	120,000	*3 *5	P.34
		bizhub 363		1	110,000		
		bizhub 283		1	100,000		
		bizhub 223		1	80,000		
	Toner filter (Main body)	bizhub 423	A02E 1484 XX	1	480,000	*3 *6	P.31
		bizhub 363		1	440,000		
		bizhub 283		1	400,000		
		bizhub 223		1	320,000		
	Ozone filter		A1UD 1351 XX	1	150,000	*3	P.30
	Toner bottle	bizhub 423	–	1	25,000	*1	P.42
		bizhub 363	–	1	25,000		
		bizhub 283	–	1	17,500		
		bizhub 223	–	1	17,500		

*1: The parts can be replaced either by user or service engineer.
*2: Actual durable cycle (life counter value)
*3: Specification value
*4: Replace those three parts at the same time.
*5: The drum unit and toner filter (Developing unit) should be replaced with new ones at the same time.
*6: The drum unit and toner filter (Main body) should be replaced with new ones at the same time.

3.2.2 Option

Classification	Parts name	Parts No.	Qt.	Replacing cycle	Descrip tions	Ref. Page
DF-621	Pick-up roller	A143 PP52 XX	2	200,000	*1 *3	*4
	Feed roller	A143 5631 XX	1	200,000		
	Separation roller assy	A143 PP01 XX	1	200,000		
PC-109	Pick-up roller	A00J 5636 XX	1	300,000	*1 *3	
	Feed roller		1	300,000		
	Separation roller		1	300,000		
PC-208	Pick-up roller		2	300,000	*1 *3	
	Feed roller		2	300,000		
	Separation roller		2	300,000		
PC-409	Pick-up roller		1	300,000	*1 *3	
	Feed roller		1	300,000		
	Separation roller		1	300,000		
FS-527	Upper paddle	A0HR 7313 XX	2	800,000	*2	
	Lower paddle	A0HR 7348 XX	9	800,000	*2	

*1: Actual durable cycle (life counter value)
*2: Total counter value
*3: Replace those parts at the same time.
*4: See each option service manual.

3.3 Periodical cleaning parts list

- Clean with reference to the numeric values displayed on the total counter, the life counter or the messages displayed on the control panel.

3.3.1 Main body

Classification	Parts name	Cleaning cycle	Descrip tions	Ref.Page
Conveyance section	Timing roller	60,000	*1	P.56
Duplex section	Duplex transport roller	60,000	*1	P.59

*1: Total counter value

3.3.2 Option

Classification	Parts name	Cleaning cycle	Descrip tions	Ref.Page
DF-621	Pick-up roller	50,000	*1	*3
	Feed roller	50,000	*1	
	Separation roller	50,000	*1	
	Rollers and rolls	50,000	*1	
	Cleaning shaft	50,000	*1	
	Reflective sensor section	50,000	*1	
JS-505	Roller and rolls	300,000	*2	
JS-603/SD-509/PK-517	Roller and rolls	300,000	*2	
	Paddles	300,000	*2	
FS-527	Roller and rolls	300,000	*2	
	Upper paddle	300,000	*2	
	Lower paddle	300,000	*2	
FS-529	Roller and rolls	300,000	*2	

*1: Actual durable cycle (life counter value)
*2: Total counter value
*3: See each option service manual.

3.4 Concept of parts life

3.4.1 Life value of consumables and parts

- The life counter value of each materials and parts is available from [Service Mode] → [Counter] → [Life].
- Life specification value means an actual life terminated when prints are made under the conditions as defined in the next section, “Conditions for life specifications values.”
  The actual life may vary greatly depending on how the machine has been used and other factors.
- “M” refers to the rotation time of each unit.

	Description	Rotation time excess warning threshold value	Life threshold value	Life stop threshold value
Fusing unit	Rotation time of the fusing unit is counted, and detected when it reaches to the set life value shown on the right.	bizhub 423: 14,800 M	bizhub 423: 15,800 M	bizhub 423: 16,440 M *1
		bizhub 363: 16,130 M	bizhub 363: 17,200 M	bizhub 363: 17,920 M *1
		bizhub 283/223: 19,930 M	bizhub 283/223: 21,350 M	bizhub 283/223: 22,300 M *1
Paper dust remover	The drum rotation time (paper dust remover) is counted and the life is detected when the count reaches the set life value shown on the right.	bizhub 423/363: 3,921 M bizhub 283/223: 4,845 M	–	–
Transfer roller unit	When the number of printed pages *2 reaches the set life value shown on the right, the end of unit life is detected.	150,000 counts	–	–
Ozone filter	When the number of printed pages *2 reaches the set life value shown on the right, the end of unit life is detected.	150,000 counts	–	–
Drum unit	Rotation time of the drum unit is counted, and detected when it reaches to the set life value shown on the right.	bizhub 423/363: 3,921 M bizhub 283/223: 4,845 M	bizhub 423/363: 4,313 M bizhub 283/223: 5,329 M	bizhub 423/363: 4,901 M *1 bizhub 283/223: 6,056 M *1
Developer	The developer use time is counted and the life is detected when the count reaches the set life value shown on the right.			

	Description	Rotation time excess warning threshold value	Life threshold value	Life stop threshold value
Developing unit	The developing unit rotation time is counted and the life is detected when the count reaches the set life value shown on the right and, at the same time, the developer use time reaches the set life value shown on the right.	bizhub 423/363: 15,684 M	bizhub 423/363: 15,684 M and 4,313 M (developer use time)	bizhub 423/363: 15,684 M and 4,901 M (developer use time)
		bizhub 283/223: 19,380 M	bizhub 423/363: 19,380 M and 5,329 M (developer use time)	bizhub 423/363: 19,380 M and 6,056 M (developer use time)

*1: The initiation of any new print cycle is inhibited when reaching the life stop threshold value.

*2: For counting the number of prints, the paper size in the sub-scan direction is added up and the count is incremented by one for the size of 216.0 mm or less and by two for the size of more than 216.0 mm.

3.4.2 Conditions for life specifications values

Item			Description
Job type	bizhub 423		Making 4 copies per job
	bizhub 363		Making 4 copies per job
	bizhub 283		Making 3 copies per job
	bizhub 223		Making 2 copies per job
Paper size			A4 or 8 $^1/_2$ x 11
PV/M	bizhub 423	Average	8,300 (US) / 10,700 (EU)
		Maximum	60,000
	bizhub 363	Average	6,100 (US) / 7,900 (EU)
		Maximum	48,000
	bizhub 283	Average	3,700 (US) / 4,800 (EU)
		Maximum	28,000
	bizhub 223	Average	2,300 (US) / 2,900 (EU)
		Maximum	19,000
Original density			B/W = 6 %
Low power mode			OFF
No. of operating days per month			20 days (Main power switch turned ON and OFF 20 times per month)

4. PERIODICAL MAINTENANCE PROCEDURE

NOTE

- **The alcohol described in the cleaning procedure of maintenance represents the isopropyl alcohol.**

4.1 Housing section

4.1.1 Replacing the ozone filter

A. Periodically replacing parts/cycle

- Ozone filter: Every 150,000 counts

B. Procedure

1. Remove the imaging unit.
See P.78

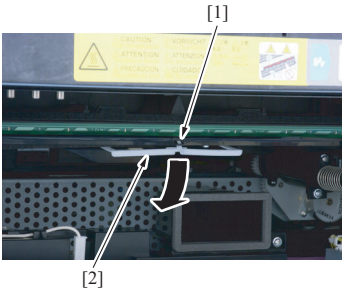

A1UDF2C001DA

2. Unhook the tab [1] and lower the stopper [2].

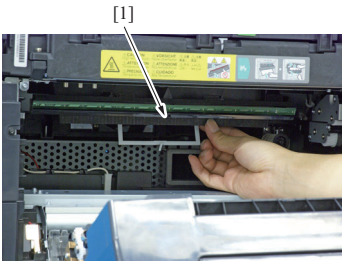

A1UDF2C002DA

3. Remove the ozone filter [1].

4. To reinstall, reverse the order of removal.

5. Clear the following life counter using the Service Mode.

- Select [Service Mode] → [Counter] → [Life] and clear the count of [Ozone Filter].
See P.438

4.1.2 Replacing the toner filter (main body)

A. Periodically replacing parts/cycle

- Toner filter (main body): Every 480,000 counts (bizhub 423)
  Every 440,000 counts (bizhub 363)
  Every 400,000 counts (bizhub 283)
  Every 320,000 counts (bizhub 223)

B. Procedure

1. Remove the rear cover/2.
See P.68

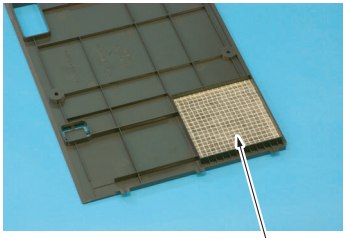

2. Peel off the toner filter (Main body) [1].

3. To reinstall, reverse the order of removal.

4.2 Photo conductor section

4.2.1 Replacing the drum unit

A. Periodically replacing parts/cycle

- Drum unit : Every 120,000 counts (bizhub 423)
  Every 110,000 counts (bizhub 363)
  Every 100,000 counts (bizhub 283)
  Every 80,000 counts (bizhub 223)

B. Removal procedure

1. Clear the following life counter using the Service Mode.
- Select [Service Mode] → [Counter] → [Life] → [2] and clear the count of [Drum unit Rotation Time].
  See P.438
2. Touch [END].
3. Turn OFF the main power switch.

NOTE

- **Be sure to clear the life counter before removing the imaging unit from the main body.**
- **After the life counter is cleared, be sure to turn OFF the main power switch.**

4. Remove the imaging unit.
   See P.78

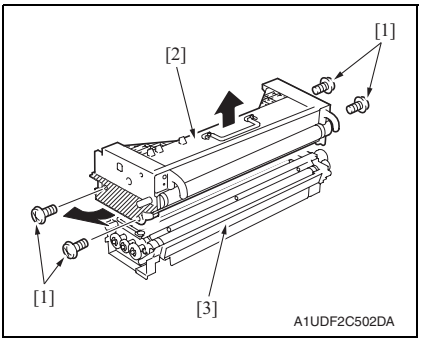

5. Remove four screws (silver) [1].
6. Slightly opening the lower part (the shadowed portion) on both sides of the drum unit, disassemble the drum unit [2] and the developing unit [3].

NOTE

- **Do not touch or scratch the photo conductor.**
- **Cover the drum unit, which has been removed, with a protective cloth or similar tool.**

C. Reinstall procedure

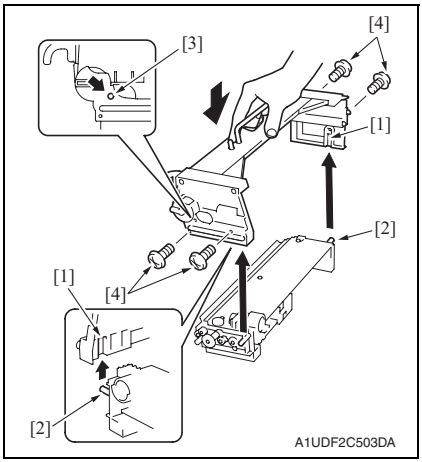

1. Align the shaft [2] of the developing unit with the inner guide [1] of the drum unit.
2. Slide the drum unit along the guide [1] to check that the positioning pin [3] is properly aligned with the mating hole.
3. Tighten four screws (silver) [4].
4. Install the imaging unit in position.
5. Turn ON the main power switch.
6. Select [Service Mode] → [Imaging Process Adjustment] → [Gradation Adjust] and carry out gradation adjust.
   See P.438

4.3 Developing section

4.3.1 Replacing the toner filter (developing unit)

A. Periodically replacing parts/cycle

- Toner filter (developing unit): Every 120,000 counts (bizhub 423)
  Every 110,000 counts (bizhub 363)
  Every 100,000 counts (bizhub 283)
  Every 80,000 counts (bizhub 223)

B. Procedure

1. Remove the imaging unit.
See P.78

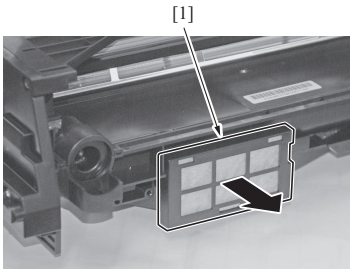

A1UDF2C517DA

2. Remove the toner filter cover [1].

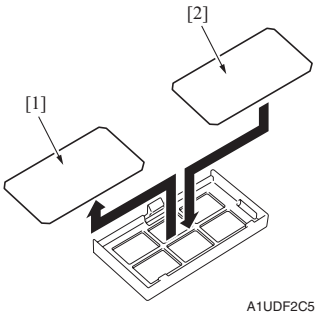

A1UDF2C518DA

3. Remove the toner filter (Developing unit) [1].

4. Attach the new toner filter (developing unit).

NOTE

- **The toner filter may be installed in either direction.**
- **Replace the drum unit with a new one at the same time.**

5. To reinstall, reverse the order of removal.

4.3.2 Replacing the developing unit

A. Periodically replacing parts/cycle

- Developing unit: Every 480,000 counts (bizhub 423)
  Every 440,000 counts (bizhub 363)
  Every 400,000 counts (bizhub 283)
  Every 320,000 counts (bizhub 223)

B. Procedure

1. Select [Administrator Settings] → [System Settings] → [Expert Adjustment] → [Forward] → [Drum Dry].
2. Press the start key to start [Drum Dry] (which will take about 60 sec.).
3. Clear the following life counter using the Service Mode.

- Select [Service Mode] → [Counter] → [Life] → [2] and clear the count of [Developing unit Rotation Time].
  See P.438

NOTE

- **Clearing the [Developing unit Rotation Time] will automatically clear [Developer Replace Count] and [Developer Use Time].**

4. Touch [END].
5. Turn OFF the main power switch.

NOTE

- **Be sure to run [Drum Dry] and clear the life counter before removing the imaging unit from the main body.**
- **After the life counter is cleared, be sure to turn OFF the main power switch.**

6. Remove the imaging unit.
   See P.78

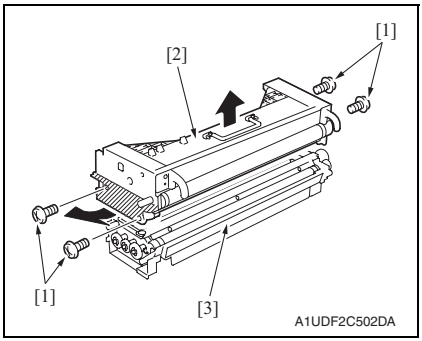

7. Remove four screws (silver) [1].
8. Slightly opening the lower part (the shadowed portion) on both sides of the drum unit, disassemble the drum unit [2] and the developing unit [3].

NOTE

- **Do not touch or scratch the photo conductor.**
- **Cover the drum unit, which has been removed, with a protective cloth or similar tool.**

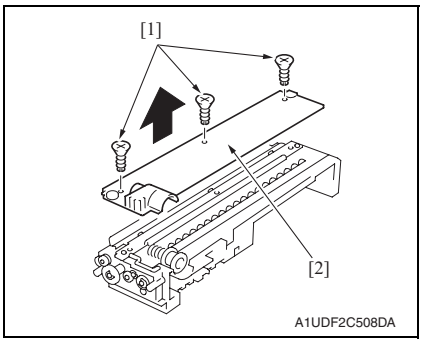

9. Remove three screws [1] of the new developing unit and remove the cover [2].

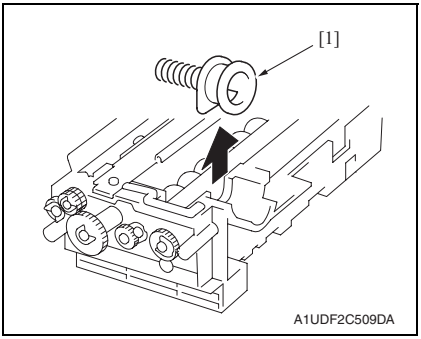

10. Remove the toner supply port [1].

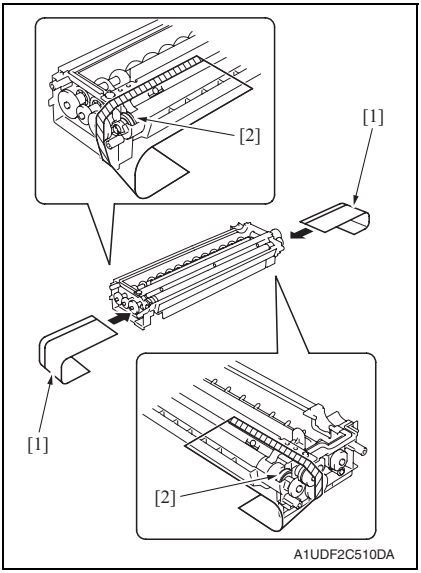

11. Affix the sheets [1] that are furnished with the drum unit.

NOTE

- **Make sure that the collar [2] is completely covered with the sheet.**
- **If the sheets [1] are not available, use paper as a substitute.**

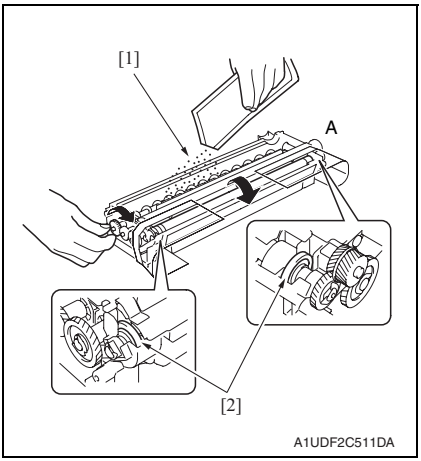

12. While turning the gear in the direction of the arrow, pour the packet of developer evenly into the developer [1] chamber.

NOTE

- **Be sure not to let developer get inside the collar [2].**
- **Turn the magnet roller in the direction of its normal rotation, and not the backward.**
- **Not touching the gear of A side.**

13. Remove the sheets that were attached in step 11.

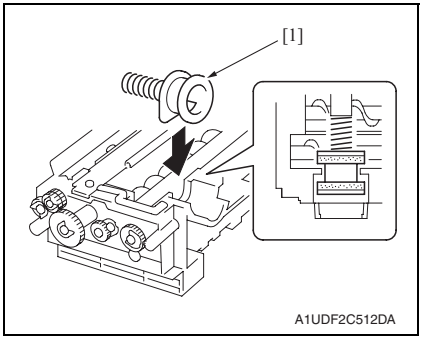

14. Reinstall the toner supply port [1].

NOTE

- **Make sure of the correct mounting position and direction.**

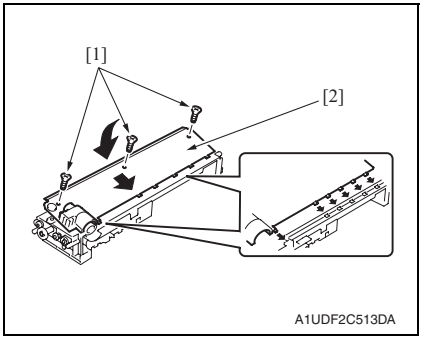

15. Using three screws [1], secure the cover [2].

NOTE

- **Make sure that the tabs on the cover are properly fitted into respective slits.**

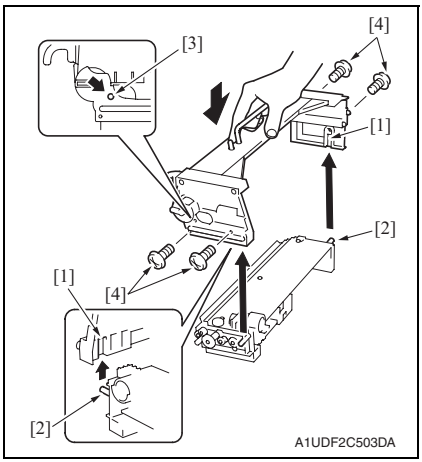

16. Align the shaft [2] of the developing unit with the inner guide [1] of the drum unit.

17. Slide the drum unit along the guide [1] to check that the positioning pin [3] is properly aligned with the mating hole.

18. Tighten four screws (silver) [4].

19. Install the imaging unit in position.

20. Turn ON the main power switch.

21. Execute [Service Mode] → [Imaging Process Adjustment] → [TCR Sensor Adjust].
See P.384

22. Select [Service Mode] → [Imaging Process Adjustment] → [Gradation Adjust] and carry out gradation adjust.
See P.380

NOTE

- **Be sure to replace the toner filter (on the main body side) at the same time.**

4.3.3 Replacing the developer

A. Periodically replacing parts/cycle

- Developer: Every 120,000 counts (bizhub 423)
  Every 110,000 counts (bizhub 363)
  Every 100,000 counts (bizhub 283)
  Every 80,000 counts (bizhub 223)

B. Procedure

1. Select [Administrator Settings] → [System Settings] → [Expert Adjustment] → [Forward] → [Drum Dry].
2. Press the start key to start [Drum Dry] (which will take about 60 sec.).
3. Clear the following life counter using the Service Mode.

- Select [Service Mode] → [Counter] → [Life] → [2] and clear the count of [Developer Use Time].
  See P.438

NOTE

- **Clearing the [Developer Use Time] will automatically increase the [Developer Replace Count].**

4. Touch [END].
5. Turn OFF the main power switch.

NOTE

- **Be sure to run [Drum Dry] and clear the life counter before removing the imaging unit from the main body.**
- **After the life counter is cleared, be sure to turn OFF the main power switch.**

6. Remove the imaging unit.
   See P.78

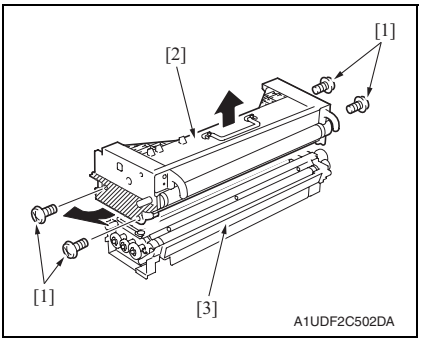

7. Remove four screws (silver) [1].
8. Slightly opening the lower part (the shadowed portion) on both sides of the drum unit, disassemble the drum unit [2] and the developing unit [3].

NOTE

- **Do not touch or scratch the photo conductor.**
- **Cover the drum unit, which has been removed, with a protective cloth or similar tool.**

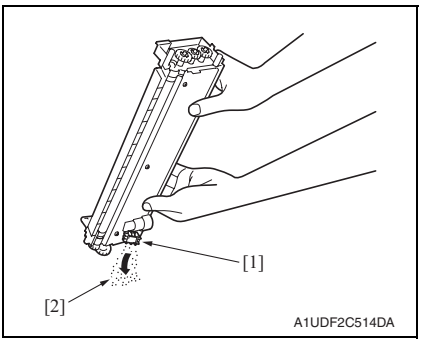

9. Tilt the developing unit as shown in the illustration to remove the developer [2] from the discharge port [1].

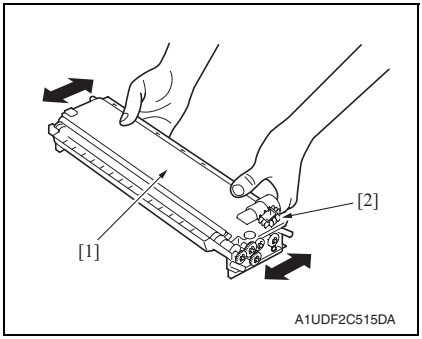

10. While holding the developing unit [1] horizontally with the discharge port [2] side up, shake the unit back and forth.

11. In the same way as step *9.*, remove the developer from the discharge port.

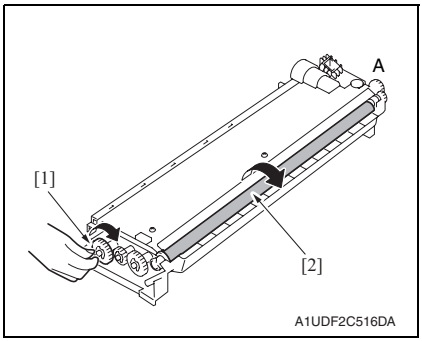

12. Rotating the gear [1] in the direction of the arrow, remove the developer from the surface of the magnet roller [2].

NOTE

- **Turn the magnet roller in the direction of its normal rotation, and not the backward.**
- **Not touching the gear of A side.**

13. Repeat steps *9.* to *12.* several times.

14. Repeat these steps two to three times until the developer is almost completely removed from the surface of the magnet roller [2].

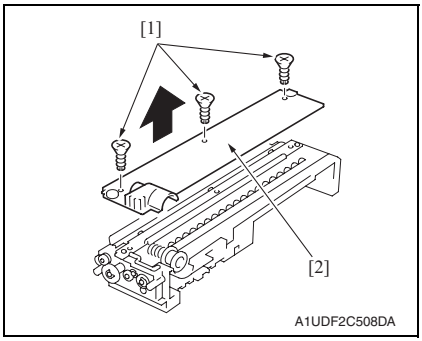

15. Remove three screws [1], and remove the cover [2].

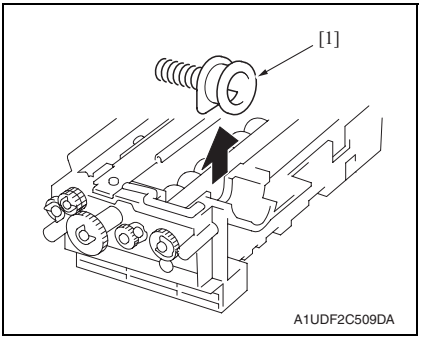

16. Remove the toner supply port [1].

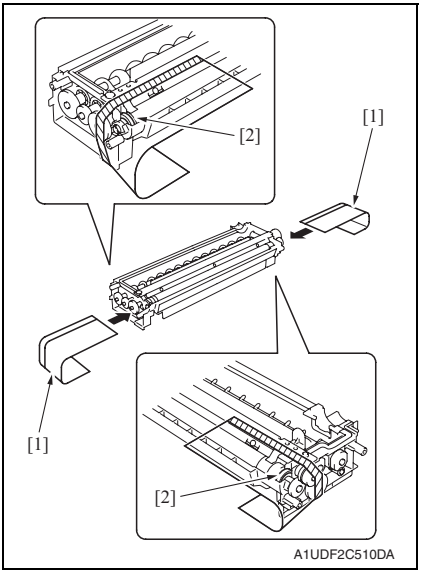

17. Affix the sheets [1] that are furnished with the drum unit.

NOTE

- **Make sure that the collar [2] is completely covered with the sheet.**
- **If the sheets [1] are not available, use paper as a substitute.**

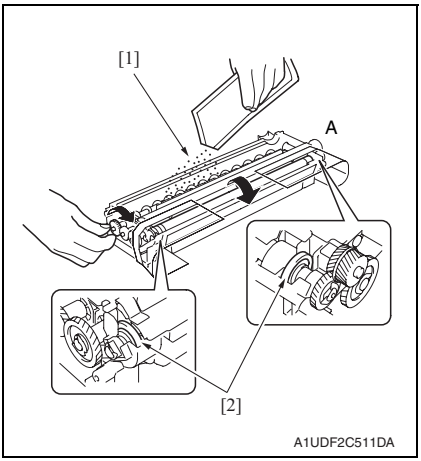

18. While turning the gear in the direction of the arrow, pour the packet of developer evenly into the developer [1] chamber.

NOTE

- **Be sure not to let developer get inside the collar [2].**
- **Turn the magnet roller in the direction of its normal rotation, and not the backward.**
- **Not touching the gear of A side.**

19. Remove the sheets that were attached in step 17.

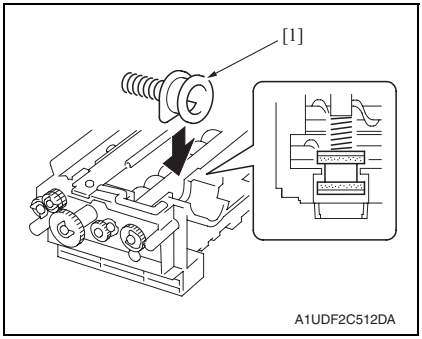

20. Reinstall the toner supply port [1].

NOTE

- **Make sure of the correct mounting position and direction.**

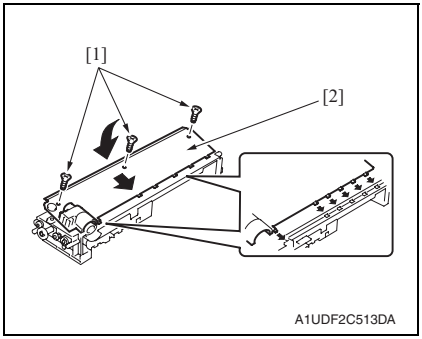

21. Using three screws [1], secure the cover [2].

NOTE

- **Make sure that the tabs on the cover are properly fitted into respective slits.**

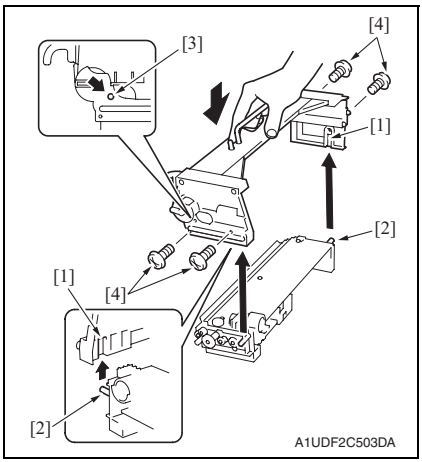

22. Align the shaft [2] of the developing unit with the inner guide [1] of the drum unit.

23. Slide the drum unit along the guide [1] to check that the positioning pin [3] is properly aligned with the mating hole.

24. Tighten four screws (silver) [4].

25. Install the imaging unit in position.

26. Turn ON the main power switch.

27. Execute [Service Mode] → [Imaging Process Adjustment] → [TCR Sensor Adjust].
See P.384

28. Select [Service Mode] → [Imaging Process Adjustment] → [Gradation Adjust] and carry out gradation adjust.
See P.380

4.4 Toner supply section

4.4.1 Replacing the toner bottle

A. Periodically replacing parts/cycle

- Toner bottle: Every 25,000 counts (bizhub 423/363)
  Every 17,500 counts (bizhub 283/223)

B. Removal procedure

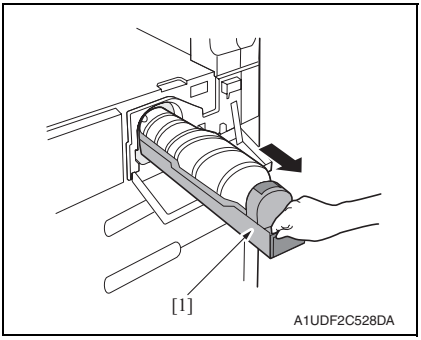

1. Open the front door and slide the toner hopper [1] out of the machine.

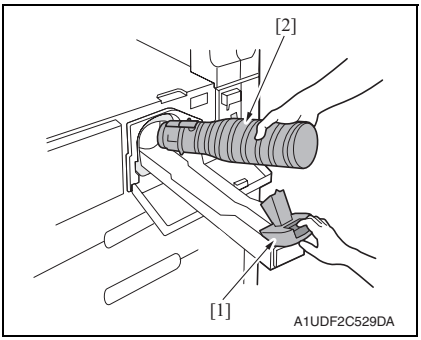

2. Pull the toner holder [1] and remove the toner bottle [2].

C. Reinstall procedure

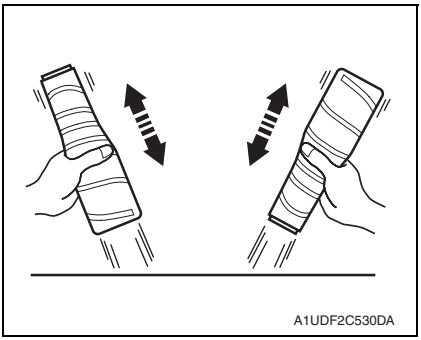

1. From a height of about 10 cm, tap the toner bottle against a table or other hard object four to five times. Then turn it upside down and repeat the same procedure.

NOTE

- **Toner can be caked in the toner bottle. Be sure to perform this procedure.**

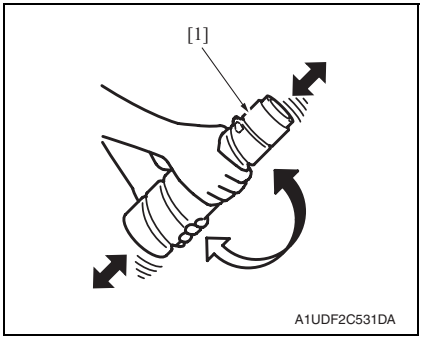

2. Shake the toner bottle [1] well about five times in the vertical direction. Then, turn it over and repeat the same procedure.

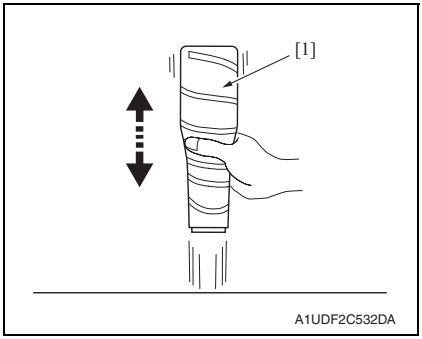

3. To move toner to the toner supply port side in the bottle, drop the toner bottle [1] with the supply port side down onto a table or other hard surface from the height of about 10 cm several times.

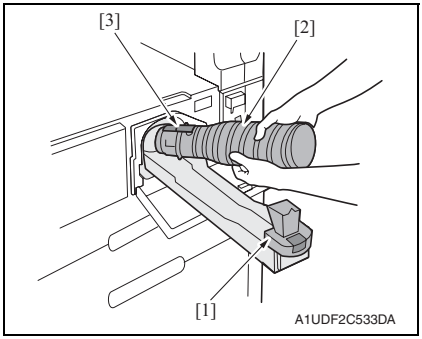

4. Open the toner holder [1] and mount the toner bottle [2].

NOTE

- **Place the toner bottle [2] so that its seal surface faces [3] upward.**

5. Close the toner holder [1].

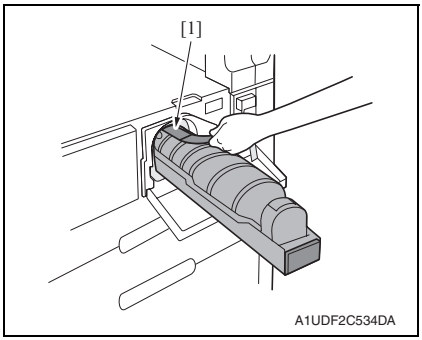

6. Gently peel off the seal [1] toward you from the bottle.

NOTE

- **Perform this procedure slowly, as toner can burst out when the seal [1] is peeled off.**

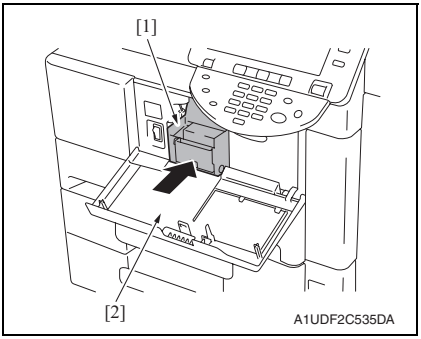

7. Slide the toner hopper [1] back into the machine until it clicks into position. Then, close the front door [2].

4.5 Transfer section

4.5.1 Replacing the transfer roller unit

A. Periodically replacing parts/cycle

- Transfer roller unit: Every 150,000 counts

B. Removal procedure

1. Open the right door.

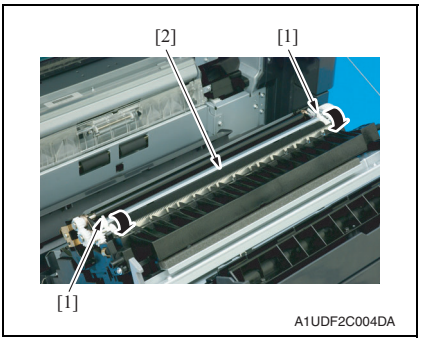

2. Pull down the knobs [1] forward and remove the transfer roller unit [2].

3. To reinstall, reverse the order of removal.
4. Clear the following life counter using the Service Mode.

- Select [Service Mode] → [Counter] → [Life] and clear the count of [Transfer Roller Unit].
  See P.438

4.6 Paper feed section

4.6.1 Replacing the manual bypass tray feed roller

A. Periodically replacing parts/cycle

- Manual bypass tray feed roller: Every 200,000 counts

B. Procedure

1. Remove the manual bypass tray unit.
   See P.90
2. Remove the manual bypass tray separation roller assy.
   See P.46
3. Remove the manual paper feed clutch.
   See P.127

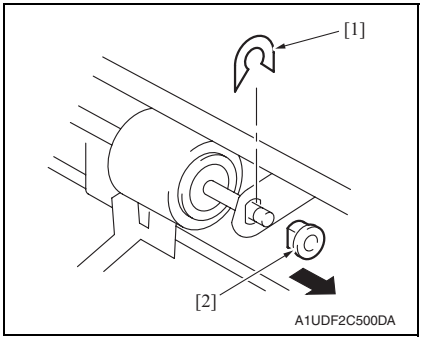

4. Snap off the C-clip [1] for the feed roller, and remove the bearing [2].

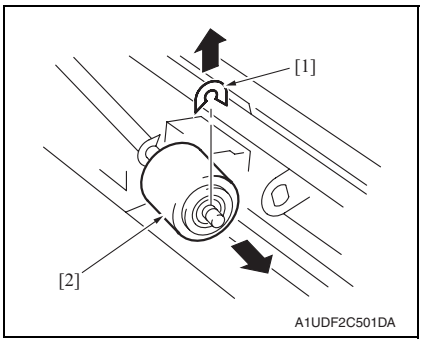

5. Snap off the C-clip [1], and remove the manual bypass tray feed roller [2].

6. To reinstall, reverse the order of removal.
7. Clear the following life counter using the Service Mode.

- Select [Service Mode] → [Counter] → [Life] and clear the count of [Manual Tray].
  See P.438

NOTE

- **Replace the manual bypass tray feed roller and the manual bypass tray separation roller assy at the same time.**

4.6.2 Replacing the manual bypass tray separation roller assy

A. Periodically replacing parts/cycle

- Manual bypass tray separation roller assy: Every 200,000 counts

B. Procedure

1. Remove the manual bypass tray unit.
See P.90

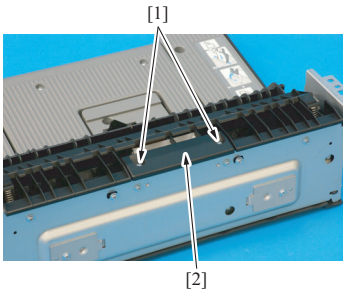

A1UDF2C005DA

2. Remove two screws [1], and remove the cover [2].

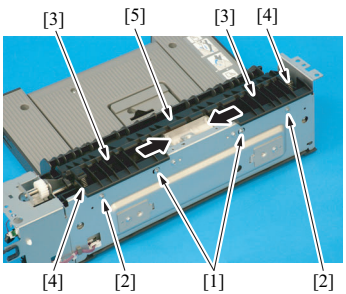

A1UDF2C006DA

3. Loosen two screws [1].
4. Remove two screws [2] and slide the two guides [3] in the direction of the arrow.
5. Remove two springs [4], and remove the transportation guide [5].

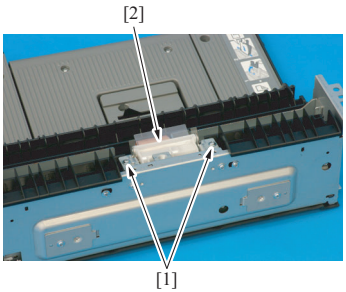

A1UDF2C007DA

6. Remove two screws [1], and remove manual bypass tray separation roller unit [2].

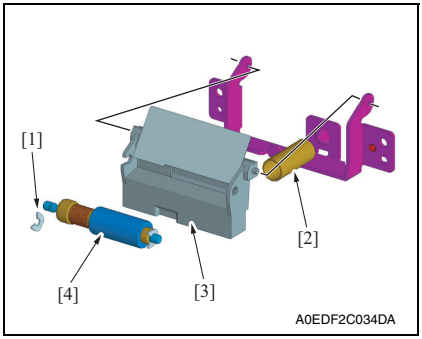

7. Snap off the C-clip [1], and remove the spring [2] and the guide plate [3]. Remove the manual bypass tray separation roller assy [4].

NOTE

- **Use care not to lose the spring [2] during the removal procedure.**

8. To reinstall, reverse the order of removal.
9. Clear the following life counter using the Service Mode.

- Select [Service Mode] → [Counter] → [Life] and clear the count of [Manual Tray].
  See P.438

NOTE

- **Replace the manual bypass tray feed roller and the manual bypass tray separation roller assy at the same time.**

4.6.3 Replacing the tray 1 feed roller/tray 1 pick-up roller

A. Periodically replacing parts/cycle

- Tray 1 feed roller: Every 300,000 counts
- Tray 1 pick-up roller: Every 300,000 counts

B. Procedure

1. Remove the tray 1 paper feed unit.
   See P.79
2. Remove the tray 1 separation roller unit.
   See P.51

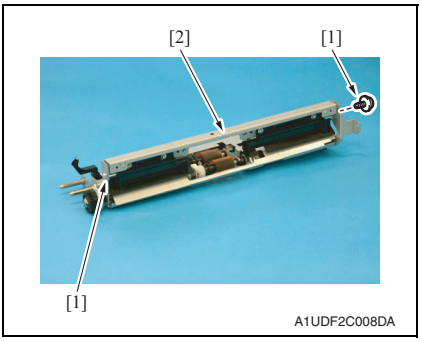

3. Remove two screws [1], and remove the separation roller unit attachment plate [2].

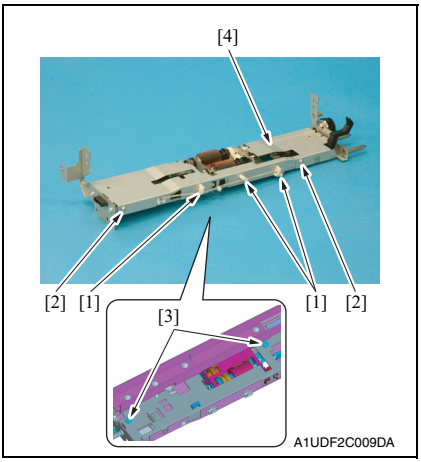

4. Remove the harness from three wire saddles [1].
5. Remove two screws [2] and two shoulder screws [3], remove the tray 1 feed roller cover [4].

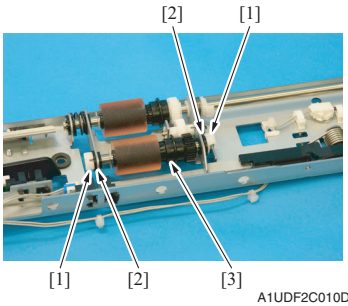

A1UDF2C010DA

6. Remove two C-clips [1] and two bearings [2], remove the tray 1 pick-up roller assy [3].

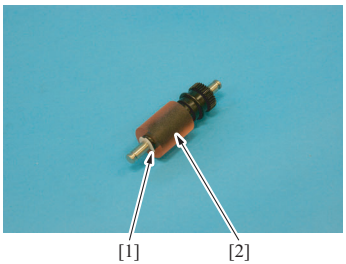

A1UDF2C011DA

7. Remove the C-ring [1], and remove the tray 1 pick-up roller [2].

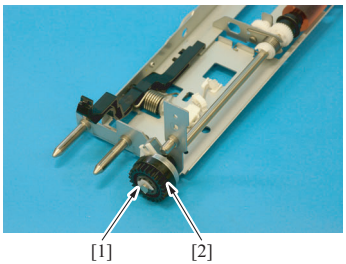

A1UDF2C012DA

8. Remove the C-ring [1], and remove the tray 1 paper feed clutch [2].

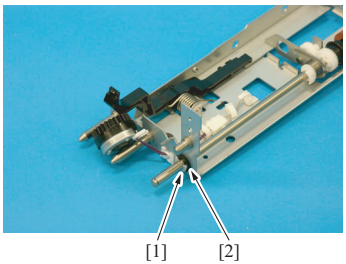

A1UDF2C013DA

9. Remove the C-ring [1] and bearing [2].

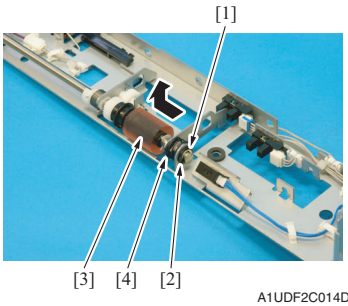

10. Remove the E-ring [1] and bearing [2], and remove the tray 1 feed roller assy [3].

NOTE

- **Use care not to lose the spring [4] during the removal procedure.**

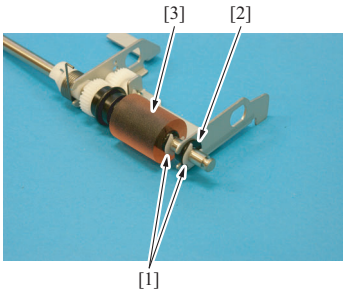

11. Remove two C-rings [1] and bearing [2], and remove the tray 1 feed roller [3].

12. To reinstall, reverse the order of removal.

13. Replace the tray 1 separation roller.
See P.51

14. Clear the following life counter using the Service Mode.

- Select [Service Mode] → [Counter] → [Life] and clear the count of [1st.].
See P.438

NOTE

- **Replace the tray 1 feed roller/tray 1 pick-up roller and the tray 1 separation roller at the same time.**

4.6.4 Replacing the tray 1 separation roller

A. Periodically replacing parts/cycle

- Tray 1 separation roller: Every 300,000 counts

B. Procedure

1. Remove the tray 1 paper feed unit.
See P.79

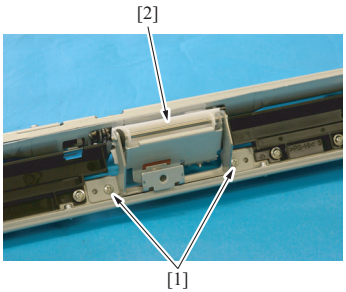

A1UDF2C017DA

2. Remove two screws [1], remove the tray 1 separation roller unit [2].

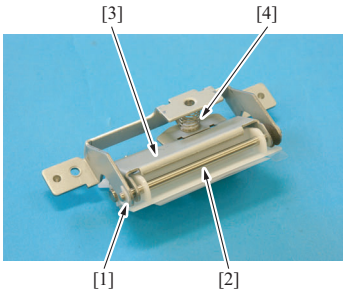

A1UDF2C018DA

3. Remove the C-ring [1] and shaft [2], and remove the separation roller assy [3].

NOTE

- **Use care not to lose the spring [4] during the removal procedure.**

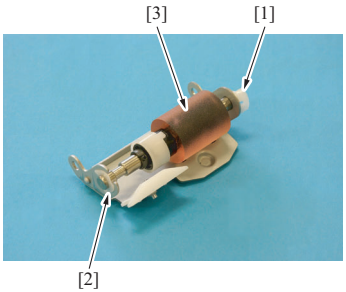

A1UDF2C019DA

4. Remove the C-clip [1] and C-ring [2], and remove the tray 1 separation roller assy [3].

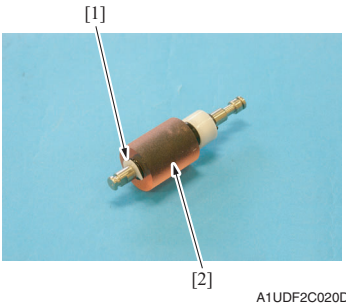

5. Remove the C-ring [1], and remove the tray 1 separation roller [2].

6. To reinstall, reverse the order of removal.
7. Clear the following life counter using the Service Mode.

- Select [Service Mode] → [Counter] → [Life] and clear the count of [1st.].
  See P.438

NOTE

- **Replace the tray 1 feed roller/tray 1 pick-up roller and the tray 1 separation roller at the same time.**

4.6.5 Replacing the tray 2 feed roller/tray 2 pick-up roller

A. Periodically replacing parts/cycle

- Tray 2 feed roller: Every 300,000 counts
- Tray 2 pick-up roller: Every 300,000 counts

B. Procedure

1. Remove the tray 2 paper feed unit.
   See P.80
2. The remainder of the removal procedure is same as the one for the tray 1 feed roller/ tray 1 pick-up roller. See “Replacing the tray 1 feed roller/tray 1 pick-up roller.”
   See P.48
3. Replace the tray 2 separation roller.
   See P.53
4. Clear the following life counter using the Service Mode.

- Select [Service Mode] → [Counter] → [Life] and clear the count of [2nd.].
  See P.438

NOTE

- **Replace the tray 2 feed roller/tray 2 pick-up roller and the tray 2 separation roller at the same time.**

4.6.6 Replacing the tray 2 separation roller

A. Periodically replacing parts/cycle

- Tray 2 separation roller: Every 300,000 counts

B. Procedure

1. Remove the tray 2 paper feed unit.
   See P.80
2. The remainder of the removal procedure is same as the one for the tray 1 separation roller. See “Replacing the tray 1 separation roller.”
   See P.48
3. Clear the following life counter using the Service Mode.

- Select [Service Mode] → [Counter] → [Life] and clear the count of [2nd.].
  See P.438

NOTE

- **Replace the tray 2 feed roller/tray 2 pick-up roller and the tray 2 separation roller at the same time.**

4.7 Registration section

4.7.1 Replacing the timing roller bearings/timing roller gear1, 2

A. Periodically replacing parts/cycle

- **Timing roller bearings**: Every 900,000 counts
- **Timing roller gears**: Every 900,000 counts

B. Procedure

1. Open the right door.

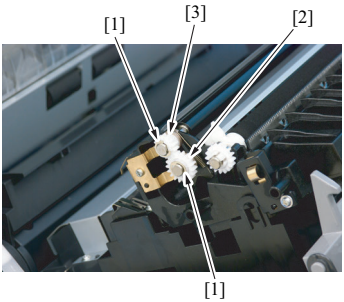

A1UDF2C021DA

2. Remove two E-rings [1].

3. Remove the timing roller gear 1 [2] and timing roller gear 2 [3].

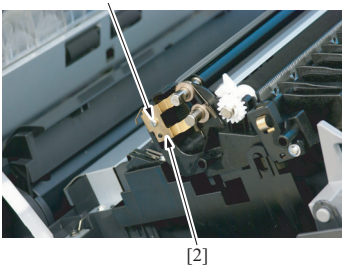

A1UDF2C022DA

4. Remove the screw [1], and remove the ground plate [2].

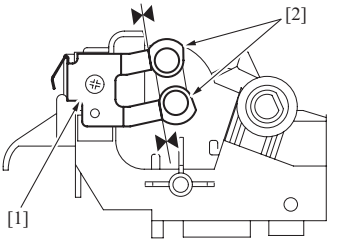

A1UDF2C546DA

NOTE

- **When reinstalling the ground plate, make sure that the ground plate [1] is in contact with the side faces of the bearings [2].**

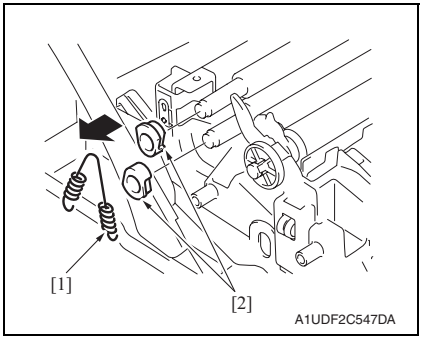

5. Remove the spring [1], and remove two timing roller bearings [2].

NOTE

- **When reinstalling the bearings, make sure that the flanges of the bearings are on the outside.**

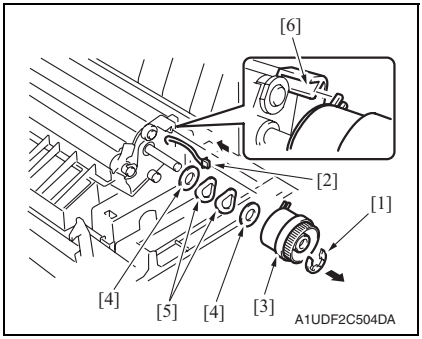

6. Remove the E-ring [1] and disconnect the connector [2]. Then, remove the timing roller clutch [3].
7. Remove two washers [4] and two wave washers [5].

NOTE

- **Be careful not to lose the washers.**
- **When mounting the clutch, set the convex part of the stopper into the concave part of the timing roller clutch [6].**

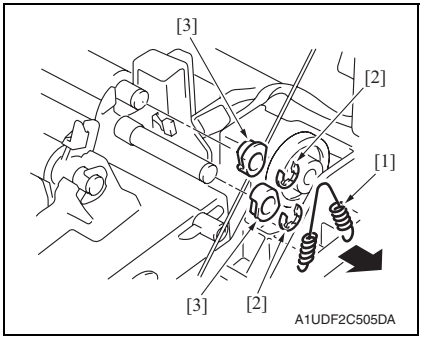

8. Remove the spring [1] and two E-rings [2], remove two timing roller bearings [3].

NOTE

- **When reinstalling the bearings, make sure that the flanges of the bearings are on the outside.**

9. To reinstall, reverse the order of removal.

4.7.2 Replacing the paper dust remover

A. Periodically replacing parts/cycle

- **Paper dust remover**: Every 150,000 counts

B. Procedure

1. Open the right door.

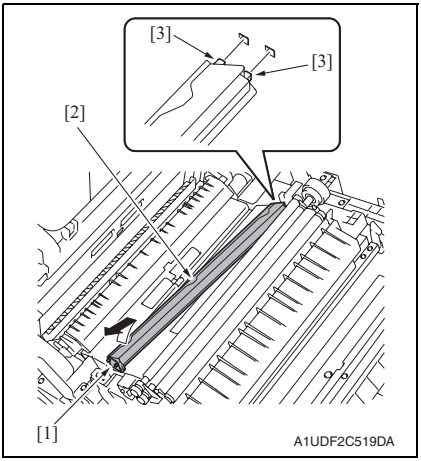

2. Unhook the tab [1] and remove the paper dust remover [2].

NOTE

- **When reinstalling the paper dust remover, be sure first to fit the two tabs [3] in place.**

3. To reinstall, reverse the order of removal.
4. Clear the following life counter using the Service Mode.

- Select [Service Mode] → [Counter] → [Life] and clear the count of [Paper Dust Remover].
  See P.438

4.7.3 Cleaning of the timing roller

A. Periodically cleaning parts/cycle

- Timing roller: Every 60,000 counts (upon each call)

B. Procedure

1. Open the right door.
2. Remove the paper dust remover.
   See P.56

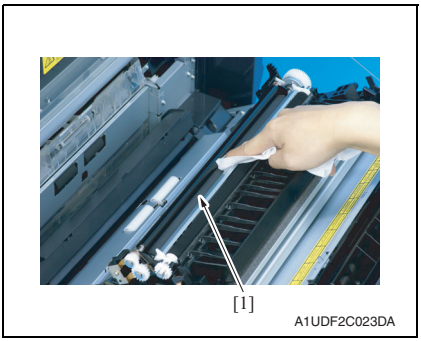

3. Using a cleaning pad with alcohol, wipe the timing roller [1] clean of dirt.

4.8 Fusing section

4.8.1 Replacing the fusing unit

⚠ CAUTION

- **The temperature gets high in the vicinity of the fusing unit. You may get burned when you come into contact with the area. Before replacement operations, make sure that more than 20 minutes have elapsed since the main and sub power switches were turned off.**

A. Periodically replacing parts/cycle

- Fusing unit: Every 450,000 counts (bizhub 423)
  Every 450,000 counts (bizhub 363)
  Every 420,000 counts (bizhub 283)
  Every 340,000 counts (bizhub 223)

B. Procedure

1. Open the right door.
2. Remove the scanner right front cover.
   See P.70

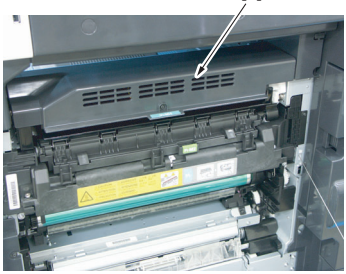

A1UDF2C549DA

3. Open the paper exit upper guide [1].

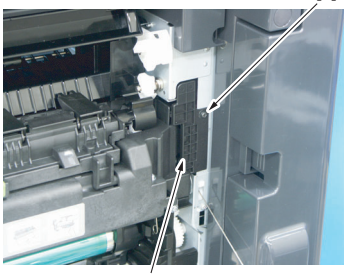

A1UDF2C551DA

4. Remove the screw [1], and remove the cover [2].

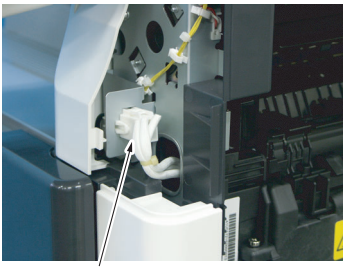

A1UDF2C024DA

5. Disconnect the connector [1].

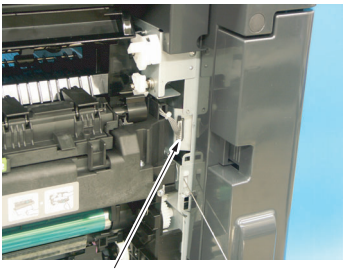

A1UDF2C550DA

6. Disconnect the connector [1].

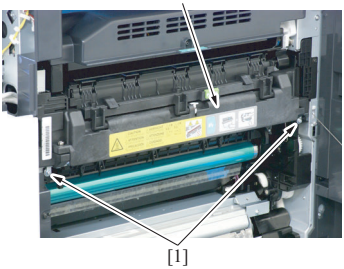

A1UDF2C026DA

7. Remove two screws [1], and remove the fusing unit [2].

NOTE

- **Use care not to allow the harness to be scratched by the metal bracket.**

8. To reinstall, reverse the order of removal.
9. Clear the following life counter using the Service Mode.

- Select [Service Mode] → [Counter] → [Life] and clear the count of [Fusing Unit Rotation Time].

See P.438

4.9 Duplex section

4.9.1 Cleaning of the duplex transport rollers

A. Periodically cleaning parts/cycle

- Duplex transport rollers: Every 60,000 counts (upon each call)

B. Procedure

1. Open the right door.

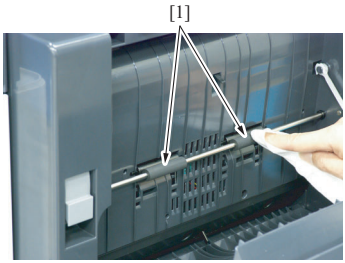

A1UDF2C027DA

2. Using a cleaning pad with water or alcohol, wipe the duplex transport rollers [1] clean of dirt.

5. OTHER MAINTENANCE ITEMS

5.1 Disassembly/adjustment prohibited items

A. Paint-locked screws

NOTE
- **To prevent loose screws, a screw lock in blue or green series color is applied to the screws.**
- **The screw lock is applied to the screws that may get loose due to the vibrations and loads created by the use of machine or due to the vibrations created during transportation.**
- **If the screw lock coated screws are loosened or removed, be sure to apply a screw lock after the screws are tightened.**

B. Red-painted screws

NOTE
- **The screws which are difficult to be adjusted in the field are painted in red in order to prevent them from being removed by mistake.**
- **Do not remove or loosen any of the red-painted screws in the field. It should also be noted that, when two or more screws are used for a single part, only one representative screw may be marked with the red paint.**

C. Variable resistors on board

NOTE
- **Do not turn the variable resistors on boards for which no adjusting instructions are given in Adjustment/Setting.**

D. Removal of PWBs

⚠ CAUTION
- **To avoid electrical shock, after turning OFF the power switch, do not touch the DC power supply for 22 minutes.**
- **When removing a circuit board or other electrical component, refer to “Handling of PWBs” and follow the corresponding removal procedures.**
- **The removal procedures given in the following omit the removal of connectors and screws securing the circuit board support or circuit board.**
- **Where it is absolutely necessary to touch the ICs and other electrical components on the board, be sure to ground your body.**

E. Precautions for disassembly
- **When accessing a hard-to-view or narrow spot, be careful about sharp edges and burrs of the frame and parts.**
  They may injure your hands or fingers.
- **If it is absolutely necessary to service the machine with the door open or external covers removed, always be attentive to the motion of the internal parts.**
  A normally protected part may cause unexpected hazards.
- **When removing a part that secures a motor, gear, or other moving part, disassembling a unit, or reinstalling any of such parts and units, be careful about moving parts and use care not to drop any part or unit. During the service procedure, give sufficient support for any heavy unit.**
  You may be injured by a falling part or unit.

F. Precautions during setup or transportation

- **Whenever mounting an option on the machine, be attentive to the motion of the fellow worker of the joint work.**
  The fellow worker may be injured with his or her finger or hand pinched between the machine and the option.
- **When mounting an option on the machine, be careful about the clearance between the machine and the option.**
  You may be injured with your finger or hand pinched between the machine and the option.
- **Do not leave the machine unattended during transportation, installation, and inspection of the machine. If it is to be unavoidably left unattended, face protrusions toward the wall or take other necessary risk reducing action.**
  The user may stumble over a protrusion of the machine or be caught by a cable, falling to the floor or being injured.

5.1.1 CCD unit

A. Reason for prohibition

- Since the accuracy of the CCD unit is guaranteed as a unit, no accuracy is guaranteed if it is disassembled.
  Therefore, screws that lead to the disassembly of the CCD unit must not be removed.

5.1.2 PH unit

A. Reason for prohibition

- The laser runs inside the PH unit. Opening the cover may cause dust to enter and interrupt the laser. Do no remove any screw which may disassemble the PH unit.

5.1.3 Fusing unit

A. Reason for prohibition

- Inner part of the fusing unit and the position of the fusing belt are adjusted prior to shipping. Do not remove any screw which may disassemble the fusing unit.

5.2 Notes when transporting the machine

- When transporting a machine to reinstall it in another location, attach the following protective materials to the machine in order to prevent the machine from being damaged or spilling out by vibration during transportation.
- The protective materials are removed when the machine is set up. However, be sure to keep the protective materials after finishing the set-up.

5.2.1 Protective materials

A. Protective materials for the photo conductors

1. Check that the exposure unit is at the home position.

2. Remove four caps.

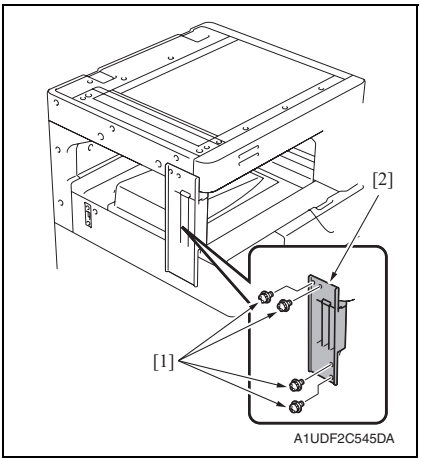

3. Secure the protective material [2] in place using four screws [1].

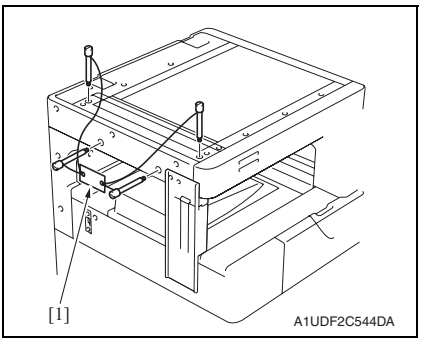

4. Install the scanner fixing bracket [1] to fix the scanner in place.

5.3 Disassembly/reassembly parts list

Section	Part name	Ref. page
Exterior parts	Front door	P.66
	Left cover	P.66
	Exit tray	P.66
	Rear right cover	P.67
	Upper right cover	P.67
	Rear cover/1	P.68
	Rear cover/2	P.68
	Lower rear cover	P.68
	Scanner rear cover	P.69
	Scanner right cover	P.70
	Scanner right front cover	P.70
	USB interface cover	P.71
	Scanner left front cover	P.71
	Scanner upper front cover	P.71
	Scanner left cover	P.72
	Scanner upper rear cover	P.72
	Scanner front cover	P.73
	Slit glass cover	P.74
	Original glass	P.74
	Control panel assy	P.75
	Tray 1	P.75
	Tray 2	P.76
	Front cover	P.76
Units	Imaging unit	P.78
	Tray 1 paper feed unit	P.79
	Tray 2 paper feed unit	P.80
	PH unit	P.81
	CCD board unit	P.84
	Exposure unit	P.86
	Toner hopper unit	P.87
	Regist unit	P.88
	Switchback unit	P.89
	Manual bypass tray unit	P.90
	Conveyance unit	P.91
	Hard disk drive	P.98
	MFP board box	P.94
	Main drive unit	P.96
	Hopper drive unit	P.92

Section	Part name	Ref. page
Boards	Scanner relay board (REYB/SCAN)	P.99
	Inverter board (INVB)	P.100
	Machine condition monitor board (MCMB)	P.101
	DC power supply (DCPU)	P.103
	Printer control board (PRCB)	P.101
	MFP board (MFPB)	P.104
	High voltage unit (HV)	P.107
	SODIMM (DIMM)	P.108
	NVRAM board (NRB)	P.108
	Paper feed tray 1 paper FD sensor board (PSDB/1)	P.109
	Paper feed tray 2 paper FD sensor board (PSDB/2)	P.110
	Paper feed tray 1 LED board, paper feed tray 2 LED board (LEDB1, LEDB2)	P.112
Motors	Scanner motor (M201)	P.112
	Duplex transport motor (M92)	P.114
	Toner supply motor (M4)	P.117
	Transport motor (M1)	P.115
	PC motor (M2)	P.116
	Switchback motor (M91)	P.117
	Toner bottle motor (M3)	P.116
	Tray 1 lift-up motor (M11)	P.118
	Tray 2 lift-up motor (M21)	P.118
	Power supply cooling fan motor (FM1)	P.119
	Cooling fan motor (FM2)	P.120
	Fusing unit cooling fan motor (FM3)	P.121
	Toner suction fan motor (FM4)	P.122
	MFP board cooling fan motor (FM5)	P.123
Clutches	Tray 1 paper feed clutch (CL11)	P.124
	Tray 2 paper feed clutch (CL21)	P.125
	Tray 2 vertical transport clutch (CL22)	P.126
	Manual paper feed clutch (CL81)	P.127
	Registration clutch (CL1)	P.128
etc.	Manual pick-up solenoid (SD81)	P.128
	Temperature/humidity sensor (TEM/HUM)	P.129
	Scanner drive cable	P.130

5.4 Cleaning parts list

Section	Part name	Ref. page
Tray 1	Tray 1 feed roller	P.136
	Tray 1 pick-up roller	
	Tray 1 separation roller	
Tray 2	Tray 2 feed roller	P.137
	Tray 2 pick-up roller	
	Tray 2 separation roller	
	Tray 2 transport roller	P.138
Manual bypass tray	Manual bypass tray feed roller	P.138
	Manual bypass tray separation roller	P.138
Scanner section	Original glass	P.139
	Scanner rails	P.139
	Mirrors (1st/2nd/3rd)	P.139
	Lens	P.140
	CCD sensor	P.141

5.5 Disassembly/reassembly procedure

5.5.1 Front door

1. Remove the exit tray.
   See P.66
2. Open the front door.

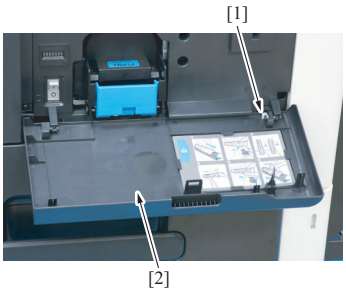

3. Remove the C-clip [1], and remove the front door [2].

5.5.2 Left cover

1. Open the front door.

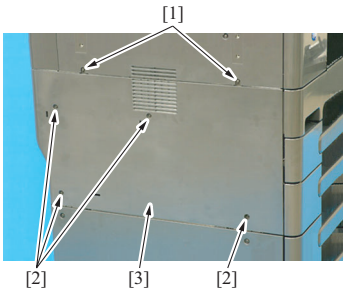

2. Remove two screws [1].
3. Remove four screws [2], and remove the left cover [3].

5.5.3 Exit tray

1. Open the front door.

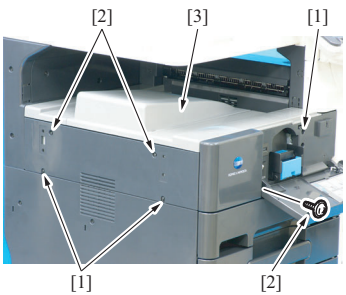

2. Loosen three screws [1].
3. Remove three screws [1], and remove the exit tray [2].

5.5.4 Rear right cover

1. Open the front door.

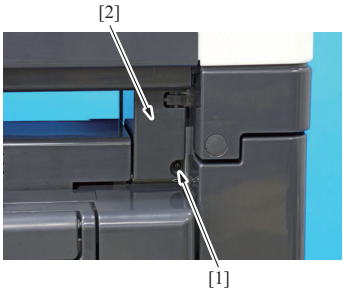

A1UDF2C031DA

2. Remove the screw [1], and remove the connector cover [2].

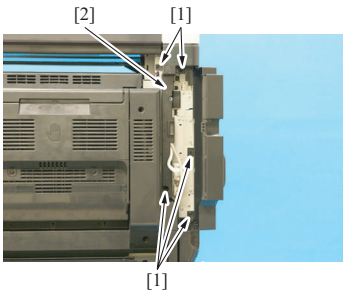

A1UDF2C032DA

3. Remove five screws [1], and remove the rear right cover [2].

5.5.5 Upper right cover

1. Remove the scanner rear cover.
See P.69

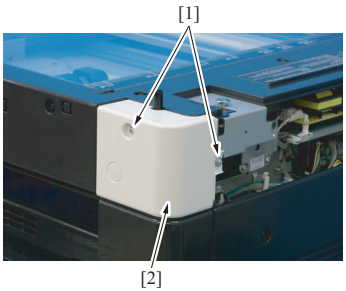

A1UDF2C033DA

2. Remove two screws [1], and remove the upper right cover [2].

5.5.6 Rear cover/1

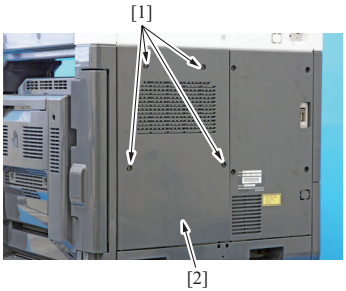

A1UDF2C034DA

1. Remove four screws [1], and remove the rear cover/1 [2].

5.5.7 Rear cover/2

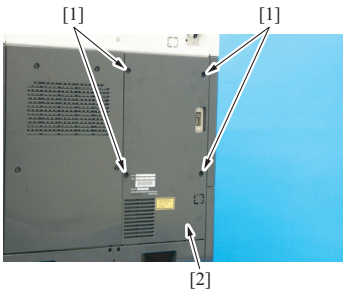

A1UDF2C035DA

1. Remove four screws [1], and remove the rear cover/2 [2].

5.5.8 Lower rear cover

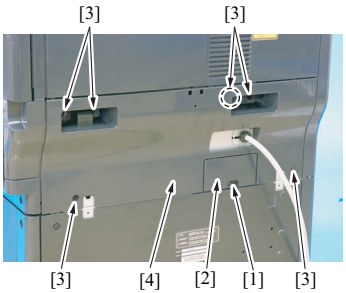

A1UDF2C036DA

1. Remove the screw [1], and remove the connector cover [2].
2. Remove six screws [3], and remove the lower rear cover [4].

5.5.9 Scanner rear cover

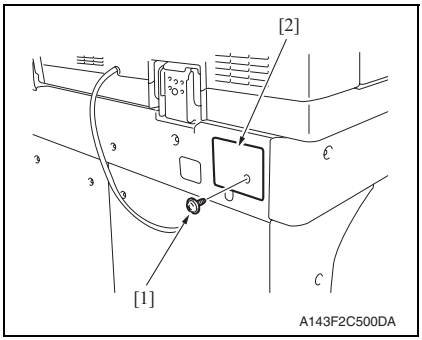

1. Remove the screws [1], and remove the connector cover [2].

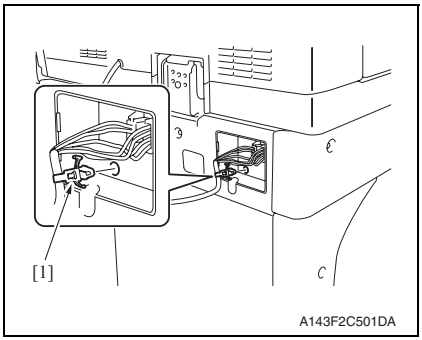

2. Remove the cable tie [1].

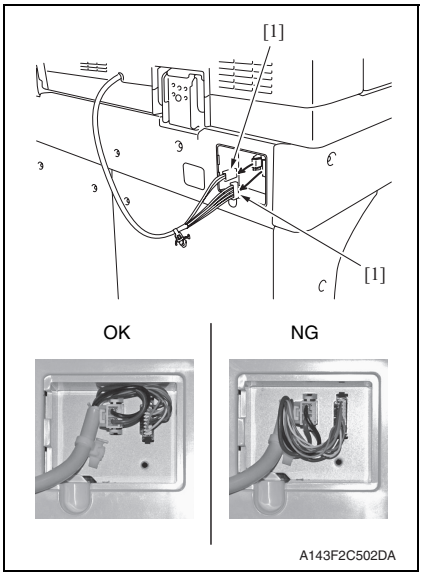

3. Disconnect two connectors [1].

NOTE

- **When connecting the connectors [1], be careful about routing of the harness.**

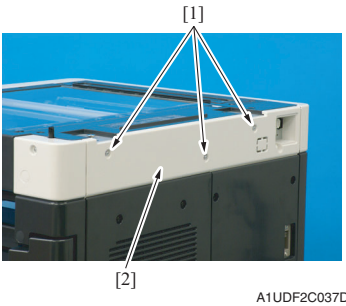

4. Remove three screws [1], and remove the scanner rear cover [2].

5. To reinstall, reverse the order of removal.

5.5.10 Scanner right cover

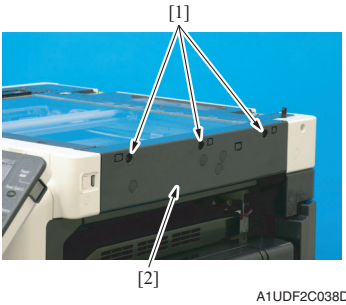

1. Remove three screws [1], and remove the scanner right cover [2].

5.5.11 Scanner right front cover

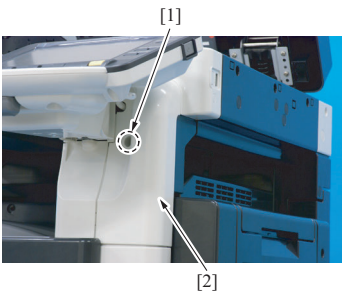

1. Remove the screw [1], and remove the scanner right front cover [2].

5.5.12 USB interface cover

1. Remove the scanner right front cover.
See P.70

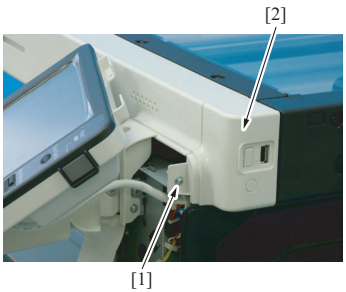

A1UDF2C040DA

2. Remove the screw [1], and remove the USB interface cover [2].

5.5.13 Scanner left front cover

1. Remove the control panel assy.
See P.75
2. Remove the scanner right front cover.
See P.70

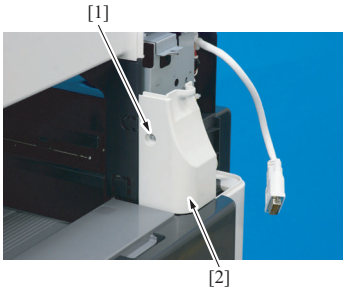

A1UDF2C041DA

3. Remove the screw [1], and remove the scanner left front cover [2].
4. To reinstall, reverse the order of removal.

5.5.14 Scanner upper front cover

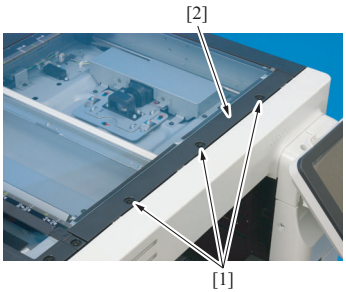

A1UDF2C042DA

1. Remove three screws [1], and remove the scanner upper front cover [2].

5.5.15 Scanner left cover

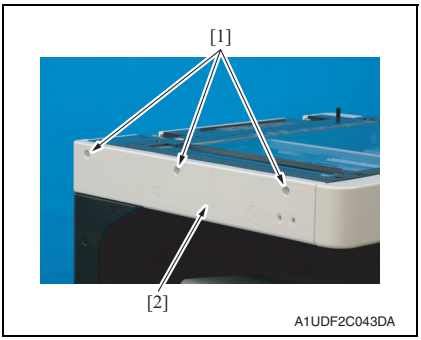

1. Remove three screws [1], and remove the scanner left cover [2].

5.5.16 Scanner upper rear cover

1. Remove the rear cover/1.
   See P.68
2. Remove the rear cover/2.
   See P.68
3. Remove the scanner rear cover.
   See P.69
4. Remove the upper right cover.
   See P.67

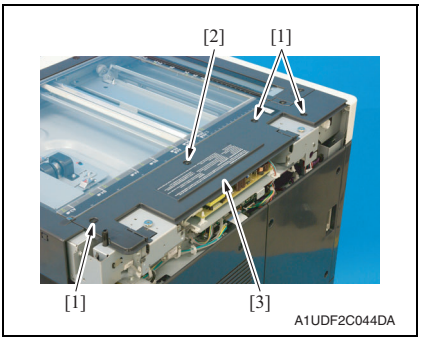

5. Remove three shoulder screws [1] and the screw [2], and remove the scanner upper rear cover [3].
6. To reinstall, reverse the order of removal.

5.5.17 Scanner front cover

1. Remove the scanner left cover.
   See P.72
2. Remove the scanner right front cover.
   See P.70
3. Remove the USB interface cover.
   See P.71
4. Remove the scanner upper front cover.
   See P.71

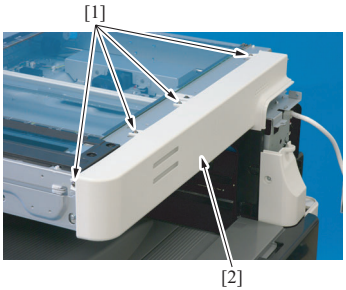

A1UDF2C045DA

5. Remove four screws [1], and remove the scanner front cover [2].

NOTE

- **Do not remove it in rush as it is connected to the harness.**

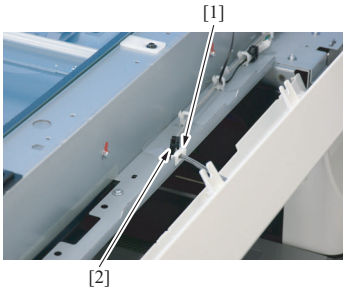

A1UDF2C046DA

6. Remove the harness from the wire saddle [1].
7. Disconnect the connector [2].
8. To reinstall, reverse the order of removal.

5.5.18 Slit glass cover

1. Remove the scanner upper rear cover.
   See P.72
2. Remove the scanner left cover.
   See P.72

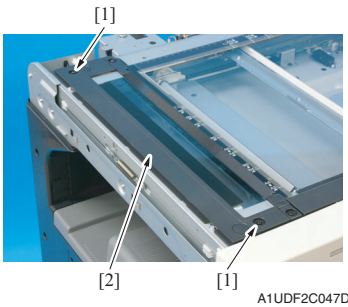

A1UDF2C047DA

3. Remove two screws [1], and remove the slit glass cover [2].
4. To reinstall, reverse the order of removal.

5.5.19 Original glass

1. Remove the scanner right cover.
   See P.70

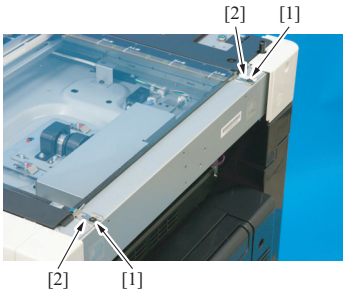

A1UDF2C048DA

2. Remove each screw [1], and remove the original glass fixing bracket (near side/inmost side) [2].

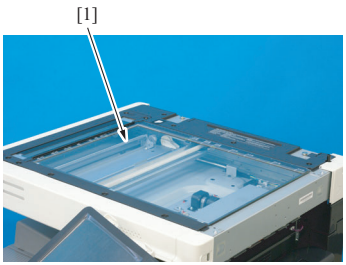

A1UDF2C049DA

3. Remove the original glass [1].
4. To reinstall, reverse the order of removal.

5.5.20 Control panel assy

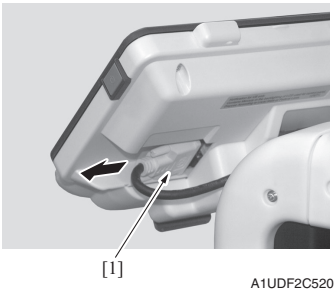

1. Disconnect the connector [1].

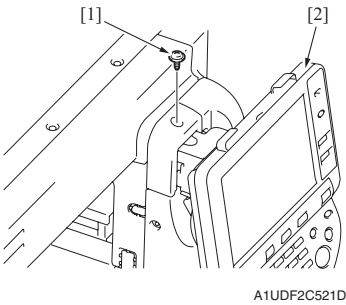

2. Remove the screw [1], and remove the control panel assy [2].

3. To reinstall, reverse the order of removal.

5.5.21 Tray 1

1. Slide out the tray 1.

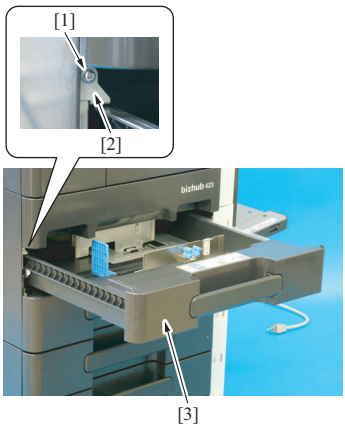

2. Remove the screw [1], and remove the stopper [2].
3. Remove the tray 1 [3].

4. To reinstall, reverse the order of removal.

5.5.22 Tray 2

1. Slide out the tray 2.

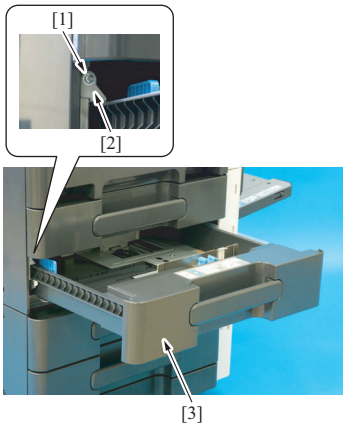

A1UDF2C051DA

2. Remove the screw [1], and remove the stopper [2].
3. Remove the tray 2 [3].
4. To reinstall, reverse the order of removal.

5.5.23 Front cover

1. Remove the scanner left front cover.
See P.71
2. Remove the exit tray.
See P.66
3. Open the front door and right door.

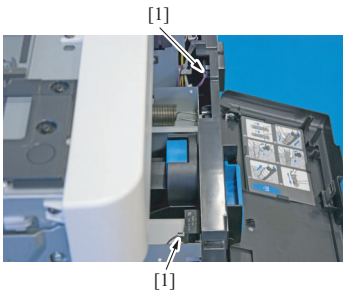

A1UDF2C052DA

4. Disconnect two connectors [1].

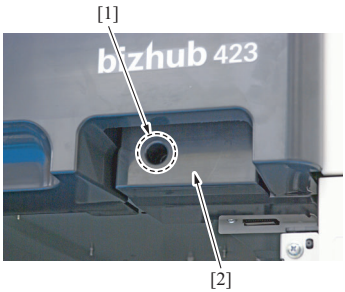

5. Remove the screw [1], and remove the connector cover [2].

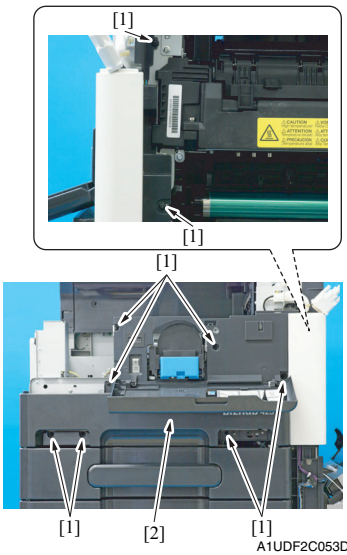

6. Remove nine screws [1], and remove the front cover [2].

7. To reinstall, reverse the order of removal.

5.5.24 Imaging unit

1. Open the right door.

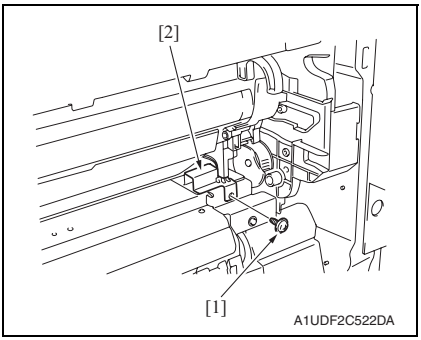

2. Remove the screw [1], and remove the cover [2].

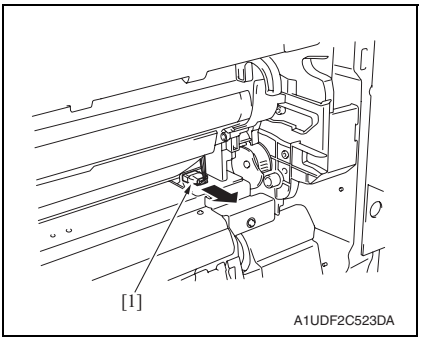

3. Disconnect the connector [1].

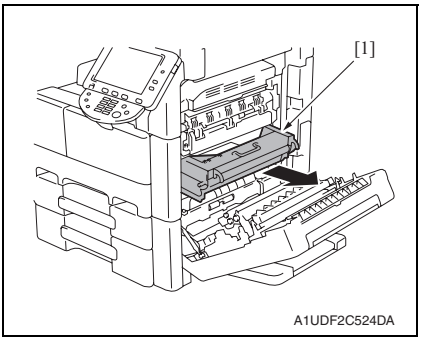

4. Remove the imaging unit [1].

5. To reinstall, reverse the order of removal.

5.5.25 Tray 1 paper feed unit

1. Remove the tray 1.
See P.75

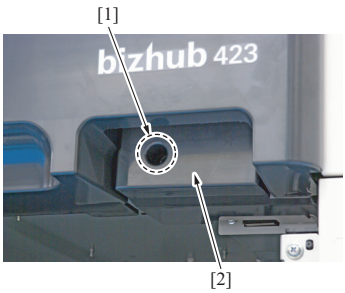

2. Remove the screw [1], and remove the connector cover [2].

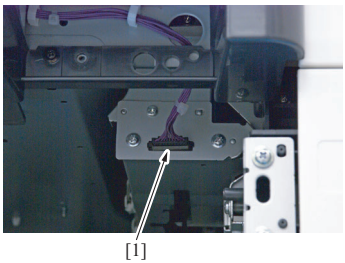

3. Disconnect the connector [1].

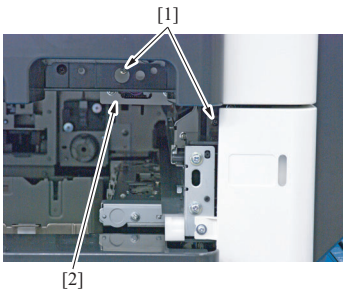

4. Remove two screws [1], and remove the tray 1 paper feed unit [2].

5. To reinstall, reverse the order of removal.

5.5.26 Tray 2 paper feed unit

1. Remove the tray 1.
   See P.75
2. Remove the tray 2.
   See P.76

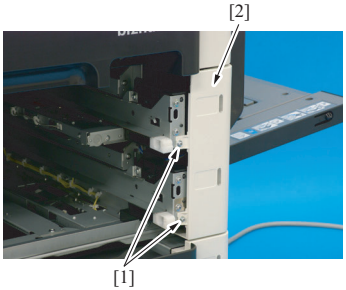

3. Remove two screws [1], and remove the front lower cover [2].

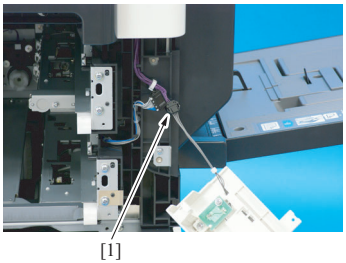

4. Disconnect the connector [1].

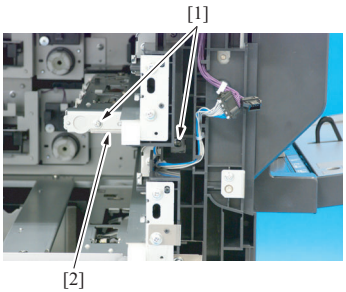

5. Remove two screws [1], and remove the tray 2 paper feed unit [2].

6. To reinstall, reverse the order of removal.

5.5.27 PH unit

CAUTION
• **Do not replace the printer head unit while the power is ON. Laser beam generated during the above mentioned activity may cause blindness.**
• **Do not disassemble or adjust the printer head unit. Laser beam generated during the above mentioned activity may cause blindness.**

1. Remove the exit tray.
   See P.66
2. Remove the rear cover/1.
   See P.68
3. Remove the rear cover/2.
   See P.68
4. Remove the scanner rear cover.
   See P.69

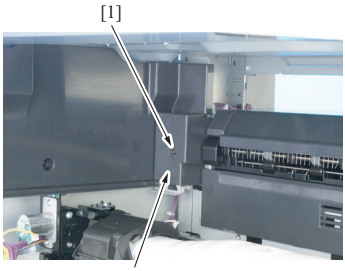

A1UDF2C060DA

5. Remove the screw [1], and remove the cover [2].

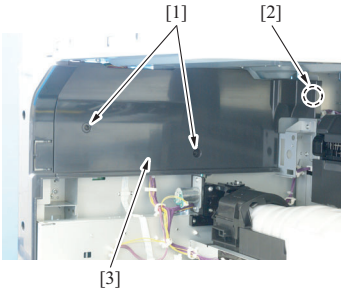

A1UDF2C061DA

6. Remove two screws [1] and unhook the tab [2], and remove the cover [3].

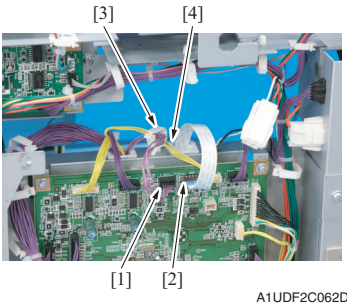

A1UDF2C062DA

7. Disconnect the connector (CN19) [1] and flat cable (CN20) [2] on the printer control board.
8. Remove the harness and flat cable from the wire saddle [3] and edge cover [4].

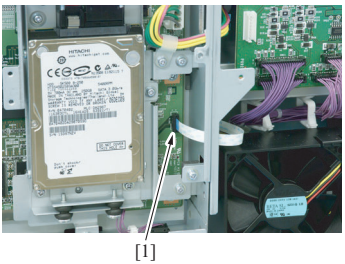

A1UDF2C063DA

9. Disconnect the flat cable (PJ02) [1] from the MFP board.

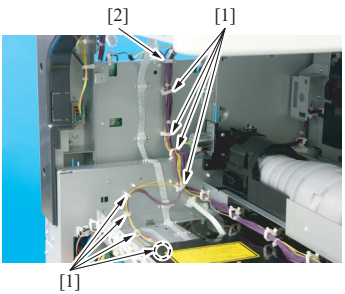

A1UDF2C064DA

10. Remove the harness from eight wire saddles [1] and edge cover [2].

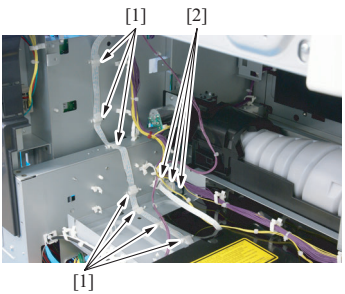

A1UDF2C065DA

11. Remove seven cable holders [1] of the flat cable.
12. Remove the flat cable from three wire saddles [2].

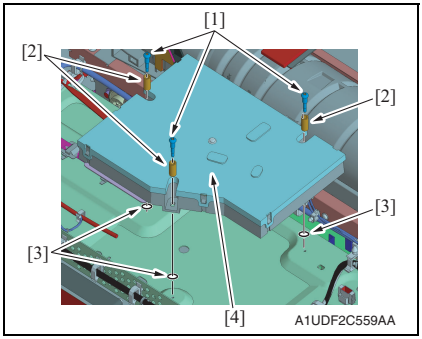

13. Remove three screws [1], three springs [2] and the spacer [3].

NOTE

- **The position, number, and color of the spacers [3] installed in the screw holes vary depending on the machine model. When removing the PH unit, therefore, be sure to remember the position, number, and color of the spacers [3] installed in each of the screw holes. (Depending on the individual PH unit performance difference, the machine may not have the spacers [3])**
- **This machine does not incorporate the system of determining the number and types of spacers installed in the PH unit by the color of the label affixed to the PH unit. The label affixed to the PH unit therefore has no special meaning in this machine.**

14. Remove the PH unit [4].

NOTE

- **When reinstalling the PH unit, be sure to attach the spacer [3] to its original position.**

15. To reinstall, reverse the order of removal.

5.5.28 CCD board unit

A. Removal procedure

1. Remove the original glass.
   See P.74

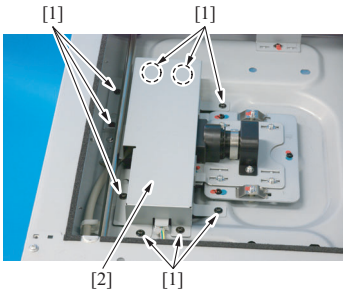

A1UDF2C067DA

2. Remove nine screws [1], and remove the CCD board protective shield [2].

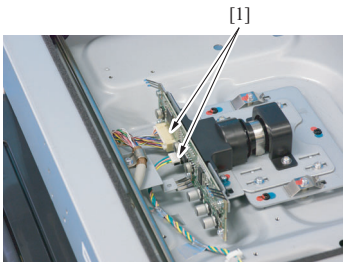

A1UDF2C068DA

3. Disconnect two connectors [1].

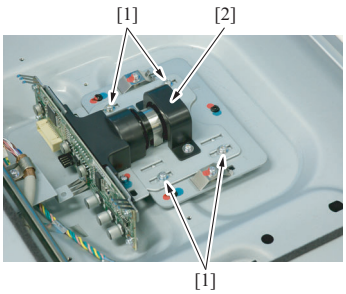

A1UDF2C069DA

4. Remove four screws [1], and remove the CCD board unit [2].

B. Reinstall procedure

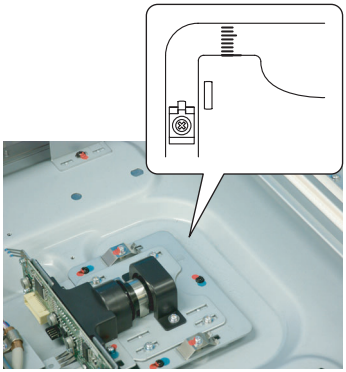

A1UDF2C070DA

1. Set the CCD unit to the mounting position at the center of the scale, and fix it with four screws.
2. Reinstall the original glass.
3. Turn ON the main power switch and sub power switch.
4. Carry out the [Main Scan Zoom Adj.] in Service Mode. If the specifications are not met, loosen the CCD board unit mounting screws and move the CCD board unit in the sub scan direction as necessary.
   See P.374

NOTE

- **Hold the CCD board unit by hand when moving it. NEVER use a screwdriver or similar tool to tap to move it, as a varied distance between the CCD sensor and lens results.**

5.5.29 Exposure unit

1. Remove the original glass.
   See P.74
2. Remove the scanner upper front cover.
   See P.71
3. Remove the scanner upper rear cover.
   See P.72

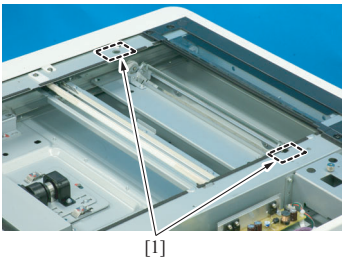

A0EDF2C086DA

4. Remove the two sheets [1] as shown in the illustration.

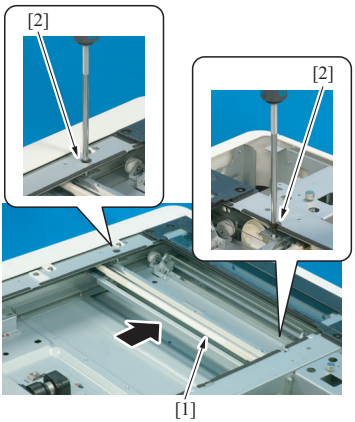

A0EDF2C087DA

5. Move the exposure unit [1] to the position where the sheets are removed (where a screwdriver can reach the screws) in the previous step.
6. Remove two screws [2], and remove the exposure unit [1].

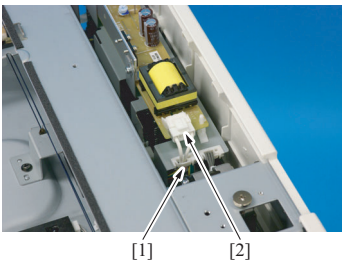

A1UDF2C071DA

7. Remove the harness from the edge cover [1], and disconnect the connector [2].

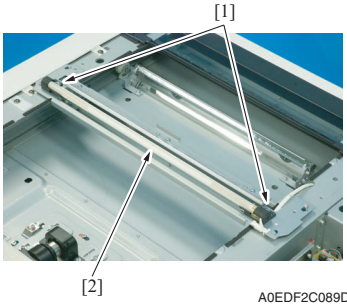

8. Remove two screws [1], and remove the exposure lamp [2] from the exposure unit.

9. To reinstall, reverse the order of removal.
10. Perform the following setting. [Service Mode] → [ADF] → [Read Pos Adj]
See P.489

5.5.30 Toner hopper unit

1. Open the front door.
2. Remove the exit tray.
See P.66

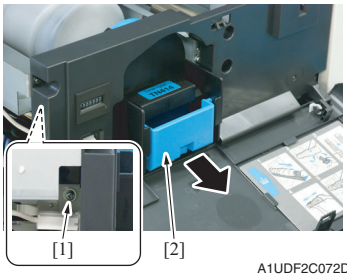

3. Loosen the screw [1].
4. Pull out the toner hopper unit [2].

5. To reinstall, reverse the order of removal.

5.5.31 Regist unit

1. Open the right door.

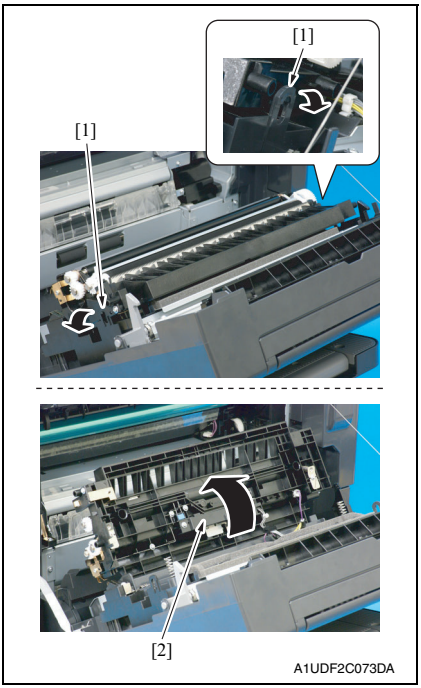

2. Widen two tabs [1] in the direction of the arrow to unlock them. Then, raise the regist unit [2] as illustrated.

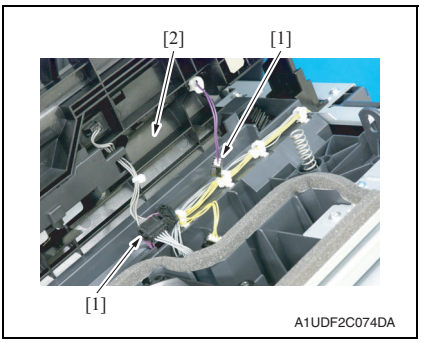

3. Disconnect two connectors [1], and remove the regist unit [2].

4. To reinstall, reverse the order of removal.

5.5.32 Switchback unit

1. Remove the fusing unit.
See P.57

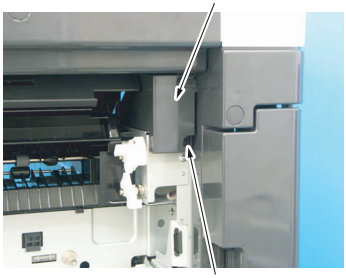

A1UDF2C554AA

2. Remove the screw [1], and remove the connector cover [2].

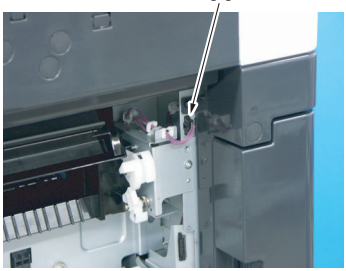

A1UDF2C555AA

3. Disconnect the connector [1].

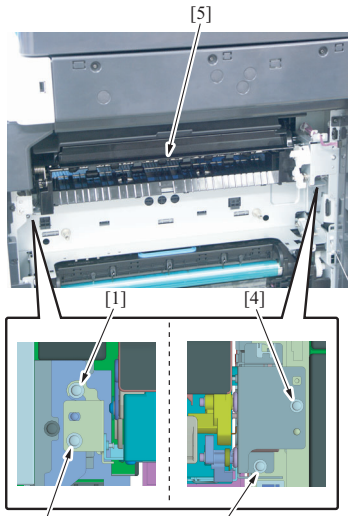

A1UDF2C556AA

4. Loosen the screw [1] in front.
5. Remove the screw [2] in front.
6. Loosen the screw [3] in the back.
7. Remove the screw [4] in the back.
8. Remove the switchback unit [5].
9. To reinstall, reverse the order of removal.

5.5.33 Manual bypass tray unit

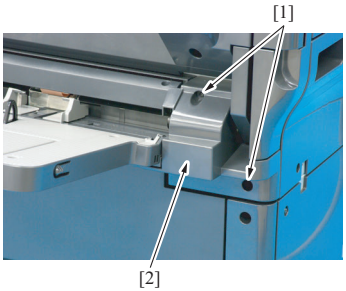

A1UDF2C076DA

1. Remove two screws [1], and remove the manual bypass tray unit right cover [2].

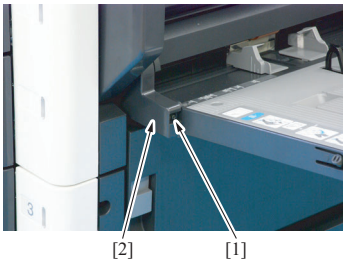

A1UDF2C077DA

2. Remove the screw [1], and remove the manual bypass tray unit left cover [2].

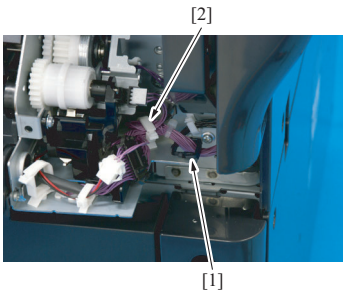

A1UDF2C078DA

3. Remove the harness from the edge cover [1] and wire saddle [2].

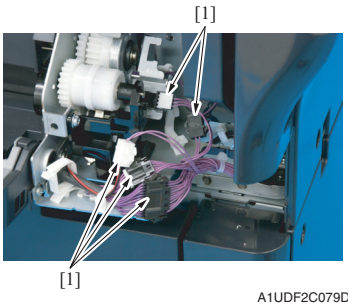

4. Disconnect five connectors [1].

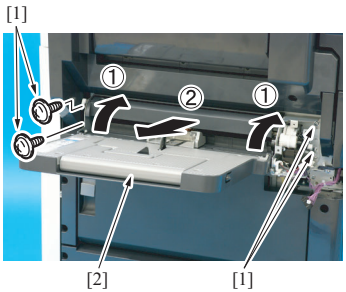

5. Remove four screws [1] and remove the manual bypass tray unit [2] as illustrated.

6. To reinstall, reverse the order of removal.

5.5.34 Conveyance unit

1. Remove the manual bypass tray unit.
See P.90
2. Remove the lower rear cover.
See P.68

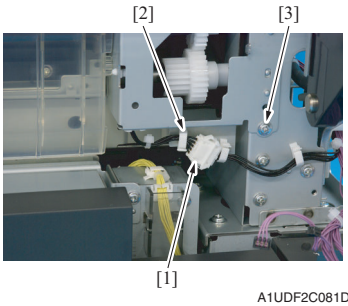

3. Disconnect the connector [1], and remove the harness from the wire saddle [2].
4. Remove the screw [3].

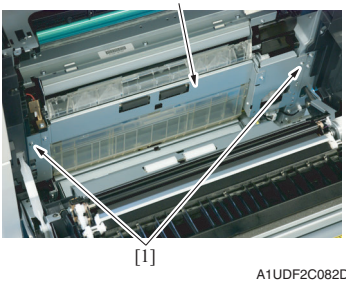

A1UDF2C082DA

5. Open the right door.
6. Remove two screws [1], and remove the conveyance unit [2].

NOTE

- **When removing the conveyance unit, be careful not to damage or deform the guide sheet of the tray 1 paper feed unit.**

7. To reinstall, reverse the order of removal.

5.5.35 Hopper drive unit

1. Remove the imaging unit.
See P.78
2. Remove the toner hopper unit.
See P.87
3. Remove the front cover.
See P.76

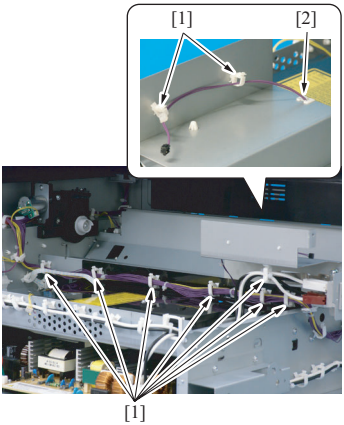

A1UDF2C083DA

4. Remove the harness from nine wire saddles [1] and edge cover [2].

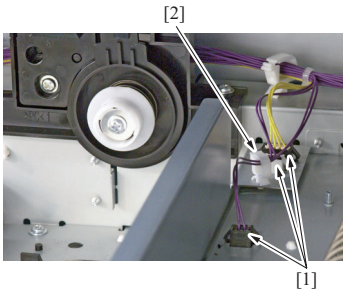

A1UDF2C084DA

5. Disconnect three connectors [1].
6. Remove the harness from the wire saddle [2].

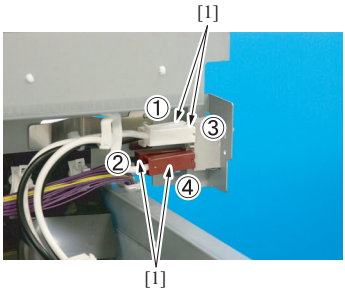

A1UDF2C085DA

7. Disconnect four connectors [1] from main switch.

NOTE

- **When mounting the main switch connectors, make sure that they are mounted at the right positions as detailed below.**

No.	Color of connectors	Color of harnesses
①	White	Black
②	Red	Black
③	White	White
④	Red	White

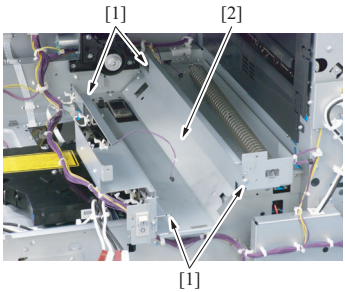

A1UDF2C086DA

8. Remove four screws [1], and remove the hopper drive unit [2].

9. To reinstall, reverse the order of removal.

5.5.36 MFP board box

1. Remove the scanner rear cover.
   See P.69
2. Remove the rear right cover.
   See P.67
3. Remove the rear cover/1.
   See P.68
4. Remove the rear cover/2.
   See P.68

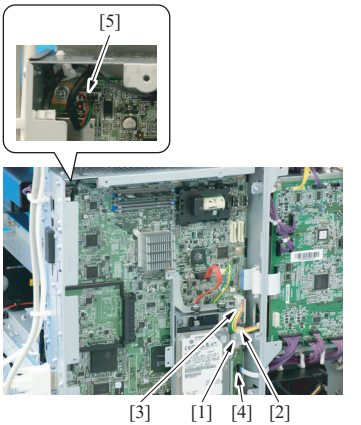

A1UDF2C087DA

5. Remove the screw [1], and remove the harness band [2].
6. Disconnect the connector (PJ04) [3] on the MFP board.
7. Disconnect the flat cable (PJ02) [4] on the MFP board.
8. Disconnect the connector (PJ30) [5] on the MFP board.

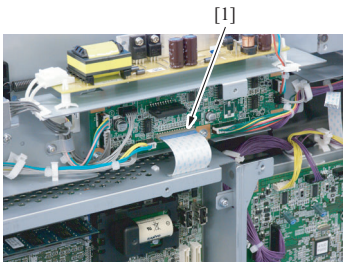

A1UDF2C088DA

9. Disconnect the flat cable (PJ2) [1] on the scanner relay board.

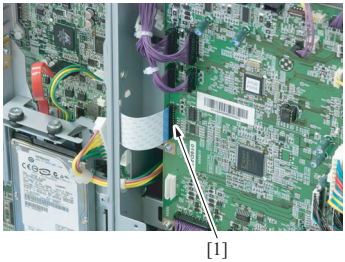

A1UDF2C089DA

10. Disconnect the flat cable (CN28) [1] on the printer control board.

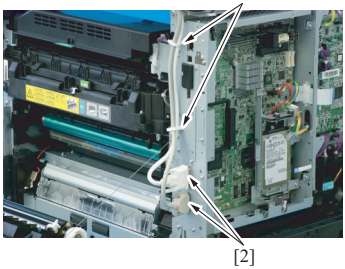

A1UDF2C090DA

11. Remove the harness from two wire saddles [1], and disconnect two connectors [2].

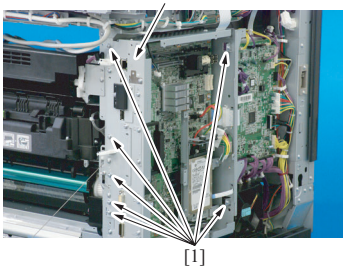

A1UDF2C091DA

12. Remove seven screws [1], and remove the MFP board box [2].

13. To reinstall, reverse the order of removal.

5.5.37 Main drive unit

1. Remove the imaging unit.
   See P.78
2. Remove the fusing unit.
   See P.57
3. Remove the MFP board box.
   See P.94
4. Remove the transport motor.
   See P.115
5. Remove the PC motor.
   See P.116

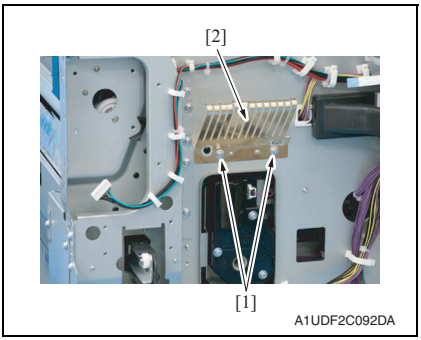

6. Remove two screws [1], and remove the ground plate [2].

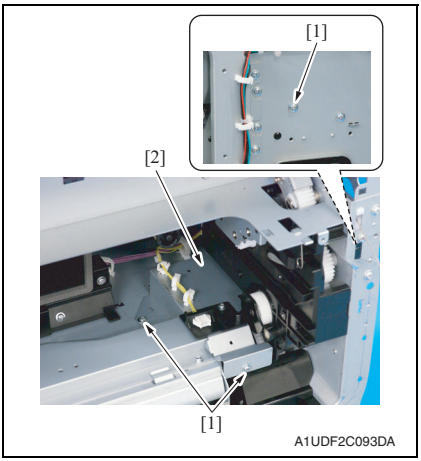

7. Remove three screws [1], and remove the relay connector attachment plate [2].

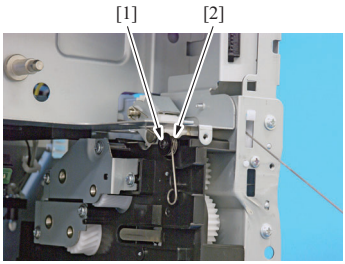

A1UDF2C094DA

8. Remove the screw [1], and remove the spring [2].

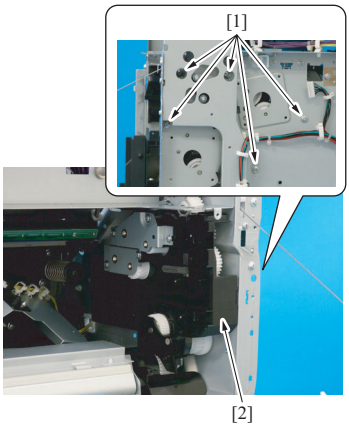

A1UDF2C095DA

9. Remove five screws [1], and remove the main drive unit [2].

10. To reinstall, reverse the order of removal.

5.5.38 Hard disk drive

1. Remove the rear cover/1.
See P.68

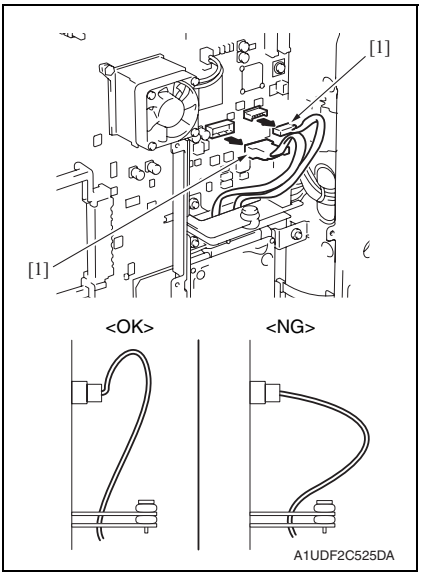

2. Disconnect two connectors [1].

NOTE

- **When reinstalling the hard disk drive, slightly bend the harness so that it does not protrude outwardly.**

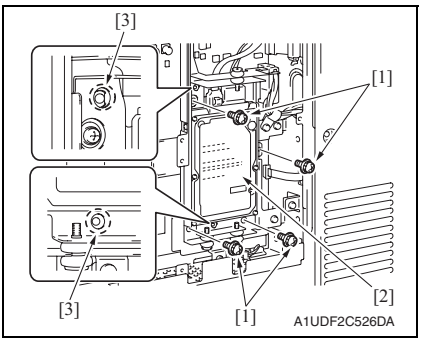

3. Remove four screws [1], and remove the hard disk assy [2].

NOTE

- **Align two dowels [3] during reinstallation.**

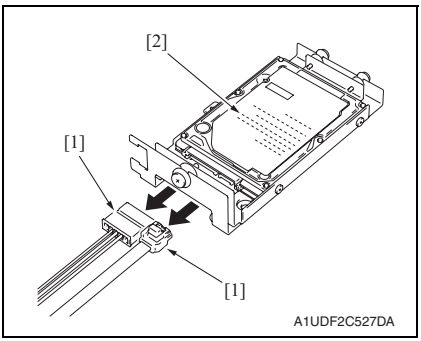

4. Disconnect two connectors [1], and remove the hard disk [2].

5. To reinstall, reverse the order of removal.

NOTE

- **When the hard disk is replaced, select [State Confirmation] - [Memory/HDD Adj.] - [HDD Format] in Service Mode for logical format.**

After formatting the HDD, make the settings below as necessary.

- Reinstallation of movie data and OCR dictionary data.

See P.437

- Resetting of HDD lock password

See P.342

5.5.39 Scanner relay board (REYB/SCAN)

1. Remove the scanner rear cover.
See P.69
2. Remove the scanner upper rear cover.
See P.72

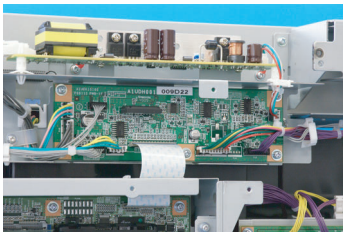

A1UDF2C096DA

3. Disconnect all connectors and flat cables on the scanner relay board.

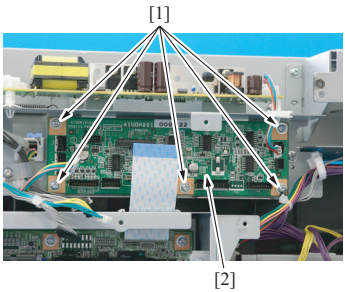

A1UDF2C097DA

4. Remove five screws [1], and remove the scanner relay board [2].

5. To reinstall, reverse the order of removal.

5.5.40 Inverter board (INVB)

1. Remove the scanner upper rear cover.
   See P.72
2. Remove the scanner relay board.
   See P.99

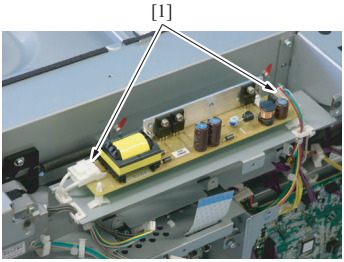

A1UDF2C098DA

3. Disconnect two connectors [1].

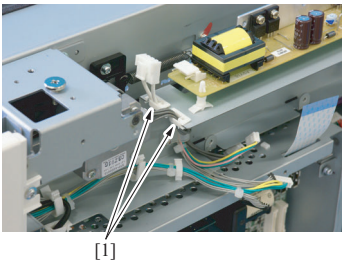

A1UDF2C099DA

4. Remove the harness from two edge covers [1].

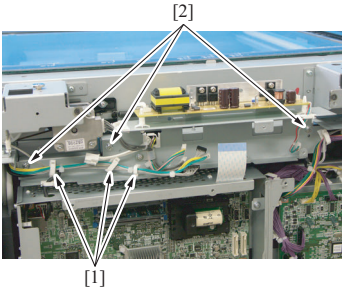

A1UDF2C100DA

5. Remove the harness from three wire saddles [1].
6. Remove three screws [2].

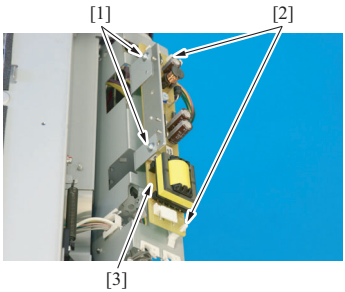

7. Remove two screws [1] and two PWB supports [2], and remove the Inverter board [3].

8. To reinstall, reverse the order of removal.

5.5.41 Machine condition monitor board (MCMB)

1. Remove the scanner front cover.
See P.73

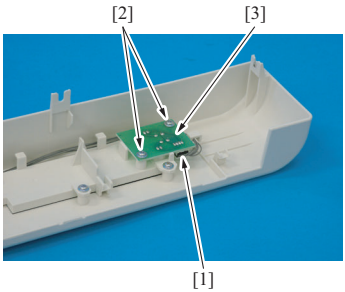

2. Disconnect the connector [1].
3. Remove two screws [2], and remove the machine condition monitor board [3].

4. To reinstall, reverse the order of removal.

5.5.42 Printer control board (PRCB)

1. Remove the rear cover/2.
See P.68

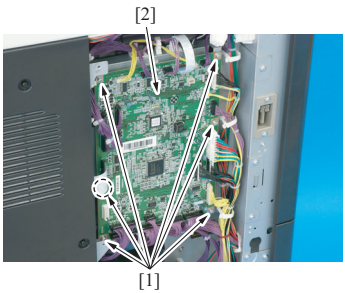

2. Disconnect all connectors on the printer control board.
3. Remove six screws [1], and remove printer control board [2].

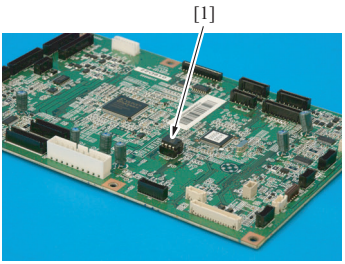

A1UDF2C104DA

NOTE

- **When the printer control board (PRCB) has been replaced, be sure to remount EEPROM (IC51) [1]. Remove EEPROM (IC51) [1] from the old printer control board and mount it on the new printer control board.**

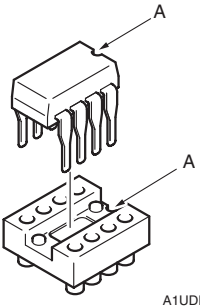

A1UDF2C507DA

NOTE

- **When mounting EEPROM (IC51), align the notches (indicated by "A" in the illustration).**

NOTE

- **When the printer control board is to be replaced, rewriting the firmware to the latest one.**
- **When the EEPROM (IC51) is replaced to the brand-new one, the error "License management error occurred." will be occurred.**
  In this case, it is necessary to repair the i-Option license management information.
  See P.750

5.5.43 DC power supply (DCPU)

⚠ CAUTION

- **Remove the DC power supply after 22 minutes or more have passed since the power plug was disconnected.**

1. Remove the left cover.
   See P.66
2. Remove the exit tray.
   See P.66

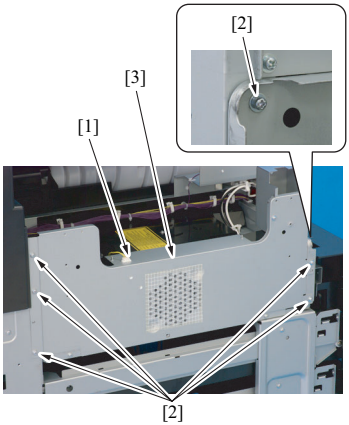

A1UDF2C105DA

3. Disconnect the connector [1].
4. Remove six screws [2], and remove the DC power supply protective shield [3].

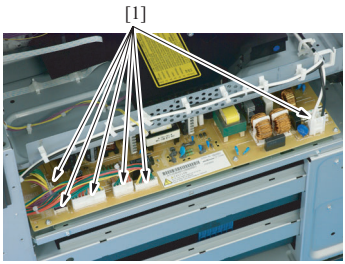

A1UDF2C106DA

5. Disconnect six connectors [1] on the DC power supply.

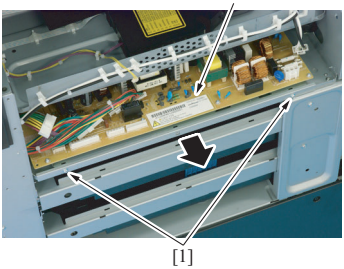

6. Remove two screws [1], and slide out the DC power supply [2].

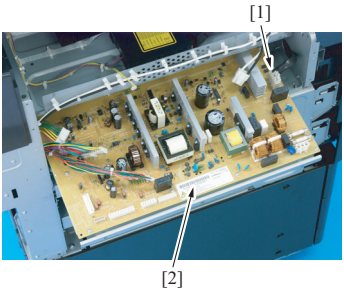

7. Disconnect the connector [1], and remove the DC power supply [2].

8. To reinstall, reverse the order of removal.

5.5.44 MFP board (MFPB)

1. Remove the MFP board box.
See P.94
2. Remove the FAX board if it is mounted.
See P.56 of the FK-508 service manual.
3. Remove the hard disk drive if it is mounted.
See P.98

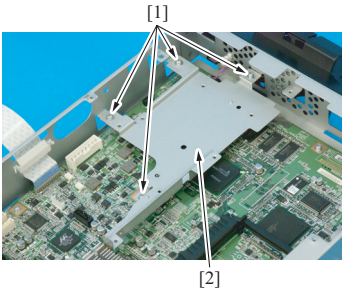

4. Remove four screws [1], and remove the hard disk attachment plate [2].

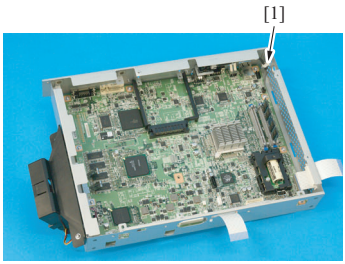

A1UDF2C110DA

5. Disconnect all connectors and flat cables on the MFP board.
6. Remove the harness from the wire saddle [1].

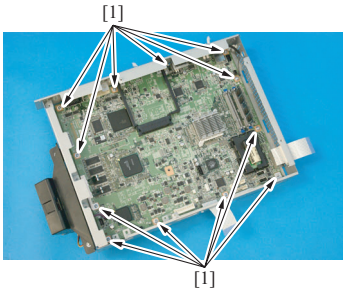

A1UDF2C111DA

7. Remove 12 screws [1] of the MFP board.

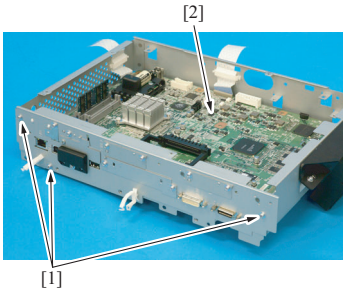

A1UDF2C112DA

8. Remove three screws [1], and remove the MFP board assy [2].

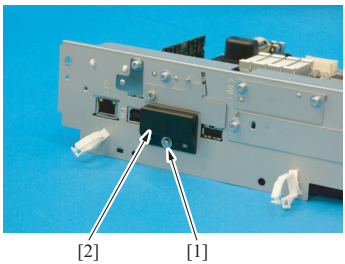

A1UDF2C113DA

9. Remove the screw [1], and remove the cover [2].

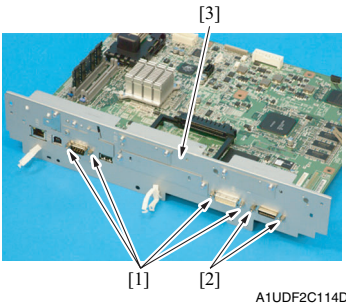

10. Remove six bolts [1][2], and remove the interface cover [3].

NOTE

- **Notice that the two bolts [2] are slightly longer than the others.**

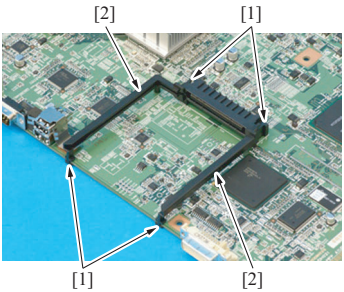

11. Remove four screws [1], and remove two PWB rails [2].

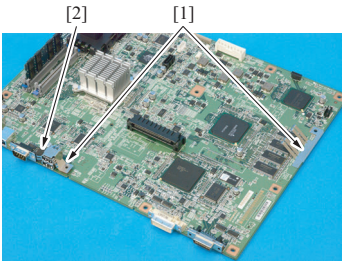

12. Remove two ground plates [1] and two sponges [2].

13. Remove the DIMM.
See P.108

14. Remove the NVRAM.
See P.108

15. To reinstall, reverse the order of removal.

NOTE

- **When the MFP board is to be replaced, rewriting the firmware to the latest one.**

5.5.45 High voltage unit (HV)

1. Remove the imaging unit.
See P.78

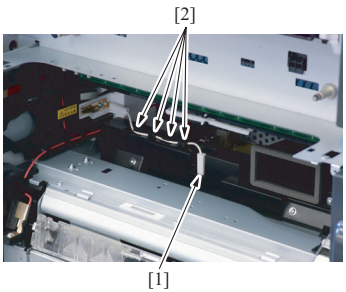

A1UDF2C117DA

2. Disconnect the connector [1], remove the harness from four guides [2].

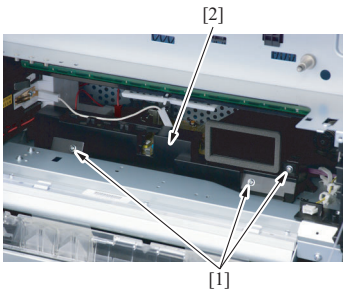

A1UDF2C118DA

3. Remove three screws [1], and remove the cover [2].

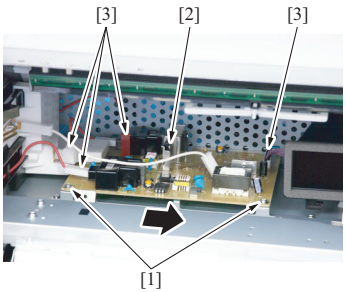

A1UDF2C119DA

4. Remove two screws [1].
5. Slide the high voltage unit [2] in the direction of the arrow.
6. Disconnect four connectors [3], and remove the high voltage unit [2].]

NOTE

- **Install the high voltage unit so that the machine terminals come into contact with the counterparts on the high voltage unit.**

7. To reinstall, reverse the order of removal.

5.5.46 SODIMM (DIMM)

1. Remove the rear cover/1.
See P.68

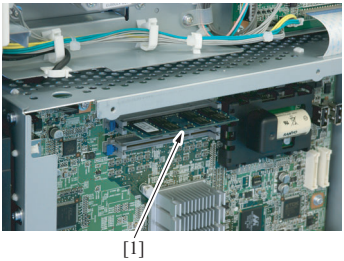

2. Remove the SODIMM [1] on the MFP board.

3. To reinstall, reverse the order of removal.

5.5.47 NVRAM board (NRB)

1. Remove the rear cover/1.
See P.68

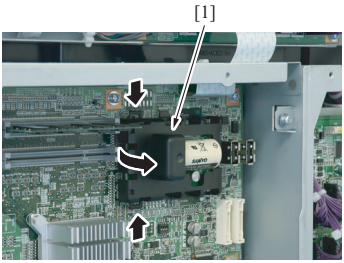

2. Remove the NVRAM board [1] on the MFP board.

3. To reinstall, reverse the order of removal.

NOTE

- **When the NVRAM board is replaced to the brand-new one, the error "License management error occurred." will be occurred.**
  In this case, it is necessary to repair the i-Option license management information.
  See P.750

5.5.48 Paper feed tray 1 paper FD sensor board (PSDB/1)

1. Remove the rear cover/2.
   See P.68
2. Remove the lower rear cover.
   See P.68
3. Remove the tray 1.
   See P.75
4. Remove the tray 2.
   See P.76
5. Open the right door.

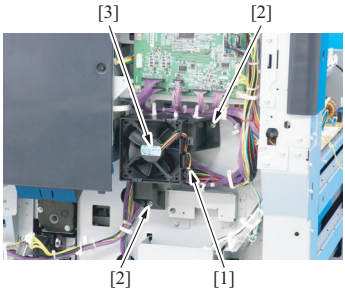

A1UDF2C151DA

6. Disconnect the connector [1].
7. Remove two screws [2], and remove the toner suction fan motor assy [3].

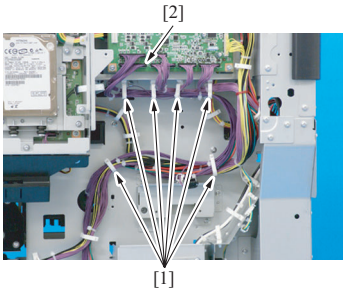

A1UDF2C122DA

8. Remove the harness from six wire saddles [1].
9. Disconnect the connector (CN12) [2] on the MFP board.

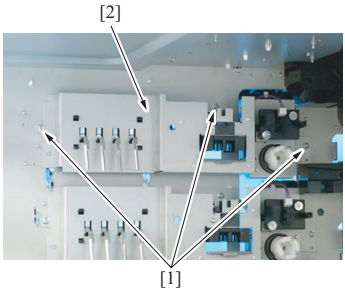

A1UDF2C123DA

10. Remove three screws [1], and remove the tray 1 sensor unit [2].

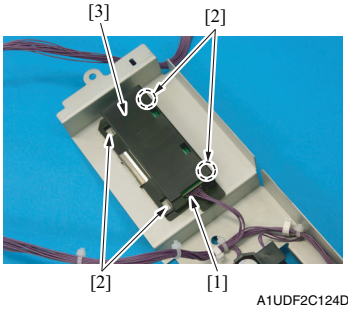

A1UDF2C124DA

11. Disconnect the connector [1].
12. Unhook four tabs [2], and remove the paper feed tray 1 paper FD sensor board assy [3].

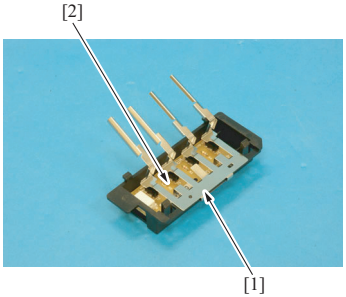

A0EDF2C168DA

13. Remove the lever [1], and remove the paper feed tray 1 paper FD sensor board [2].

NOTE

- **When removing the lever, be careful not to deform the lever.**

14. To reinstall, reverse the order of removal.

5.5.49 Paper feed tray 2 paper FD sensor board (PSDB/2)

1. Remove the rear cover/2.
See P.68
2. Remove the lower rear cover.
See P.68
3. Remove the tray 1.
See P.75
4. Remove the tray 2.
See P.76

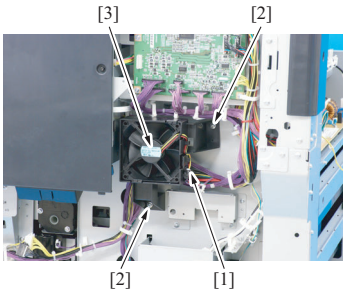

A1UDF2C151DA

5. Disconnect the connector [1].
6. Remove two screws [2], and remove the toner suction fan motor assy [3].

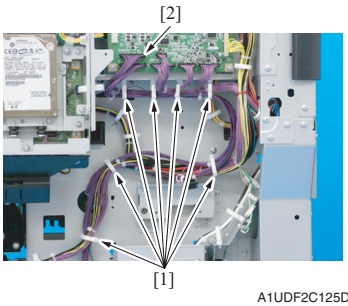

A1UDF2C125DA

7. Remove the harness from seven wire saddles [1].
8. Disconnect the connector (CN11) [2] on the MFP board.

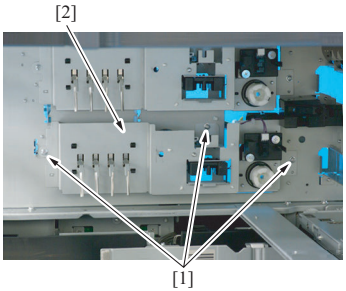

A1UDF2C126DA

9. Remove three screws [1], and remove the tray 2 sensor unit [2].

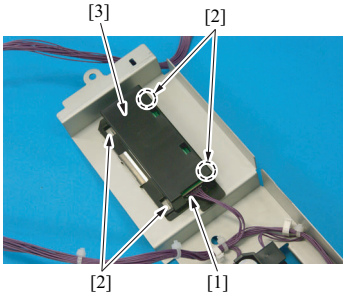

A1UDF2C124DA

10. Disconnect the connector [1].
11. Unhook four tabs [2], and remove the paper feed tray 2 paper FD sensor board assy [3].

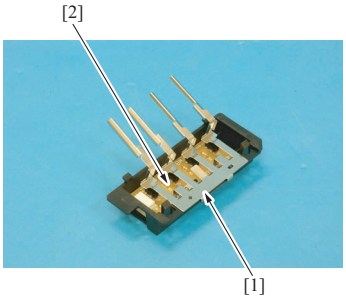

A0EDF2C168DA

12. Remove the lever [1], and remove the paper feed tray 2 paper FD sensor board [2].

NOTE

- **When removing the lever, be careful not to deform the lever.**

13. To reinstall, reverse the order of removal.

5.5.50 Paper feed tray 1 LED board, Paper feed tray 2 LED board (LEDB1, LEDB2)

1. Slide out the tray 1 and tray 2.

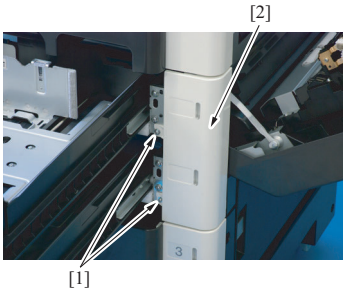

A1UDF2C127DA

2. Remove two screws [1] and place the lower front cover [2] with the inside up.

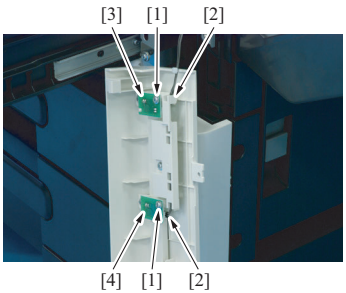

A1UDF2C128DA

3. Remove the screw [1] each, disconnect the connector [2] each, and remove the paper feed tray 1 LED board [3] and the paper feed tray 2 LED board [4].

4. To reinstall, reverse the order of removal.

5.5.51 Scanner motor (M201)

A. Removal procedure

1. Remove the scanner rear cover.
See P.69
2. Remove the upper right cover.
See P.67
3. Remove the scanner upper rear cover.
See P.72

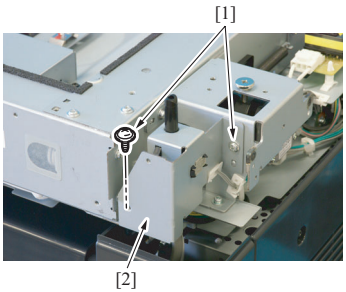

A1UDF2C129DA

4. Remove two screws [1], and remove the angle sensor assy [2].

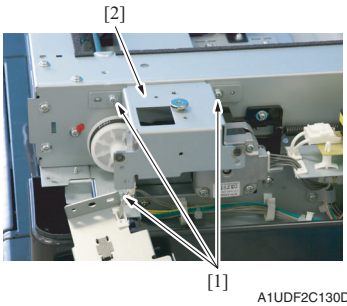

A1UDF2C130DA

5. Remove three screws [1], and remove the ADF base plate [2].

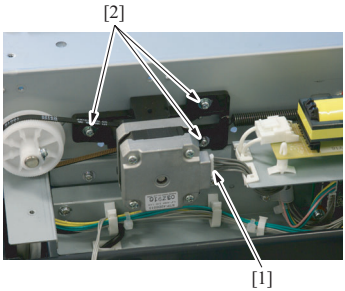

A1UDF2C131DA

6. Disconnect the connector [1], and remove three screws [2].

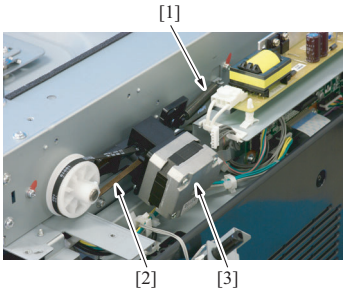

A1UDF2C132DA

7. Remove the spring [1] and the belt [2], and remove the scanner motor assy [3].

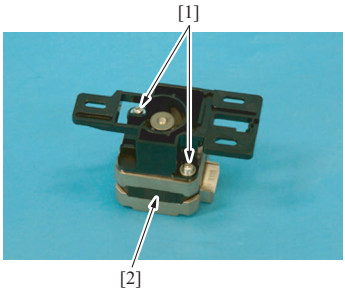

A1UDF2C133DA

8. Remove two screws [1], and remove the scanner motor [2].

B. Reinstall procedure

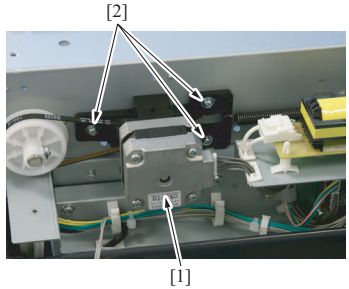

A1UDF2C134DA

1. Temporarily secure the scanner motor assy [1] with three screws [2].

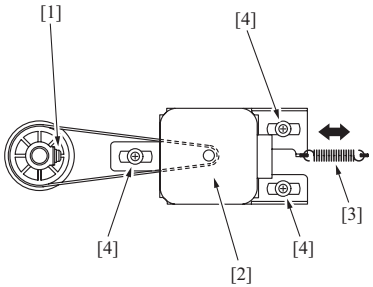

A0EDF2C258DA

2. With the scanner drive gear set screw [1] located on the right-hand side as shown on the left, slide the scanner motor assy [2] to the left and check that it is returned to the original position by the tension of the spring [3].
   Perform this step three times.
3. Turn the pulley and make sure that the belt does not ride up on the pulley teeth.
4. Tighten the three screws [4] to fix the scanner motor assy [2] into position.

5.5.52 Duplex transport motor (M92)

1. Open the right door.

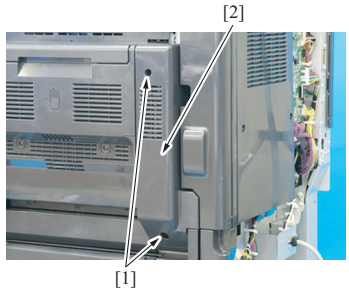

A1UDF2C135DA

2. Remove two screws [1], and remove the duplex transport cover [2].

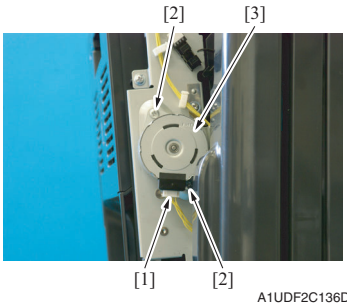

A1UDF2C136DA

3. Disconnect the connector [1].
4. Remove two screws [2], and remove the duplex transport motor [3].
5. To reinstall, reverse the order of removal.

5.5.53 Transport motor (M1)

1. Remove the lower rear cover.
See P.68
2. Remove the MFP board box.
See P.94

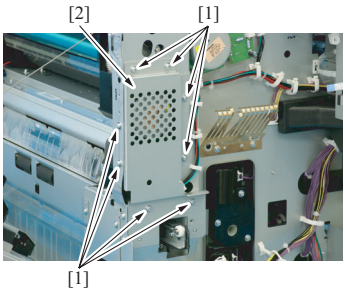

A1UDF2C137DA

3. Remove eight screws [1], and remove the sheet metal cover [2].

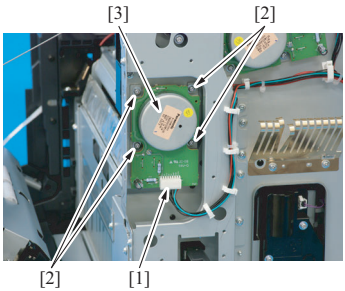

A1UDF2C138DA

4. Disconnect the connector [1].
5. Remove four screws [2], and remove transport motor [3].
6. To reinstall, reverse the order of removal.

5.5.54 PC motor (M2)

1. Remove the MFP board box.
See P.94

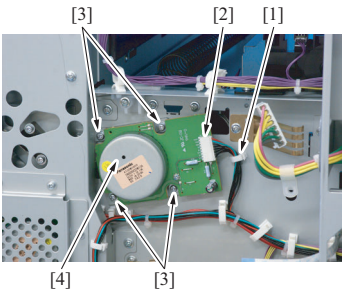

A1UDF2C139DA

2. Remove the harness from the wire saddle [1], and disconnect the connector [2].
3. Remove four screws [3], and remove the PC motor [4].
4. To reinstall, reverse the order of removal.

5.5.55 Toner bottle motor (M3)

1. Remove the exit tray.
See P.66

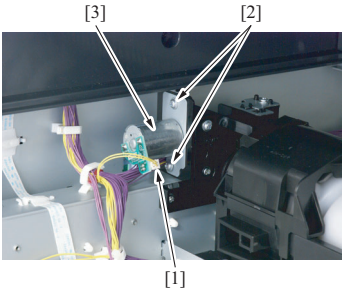

A1UDF2C140DA

2. Disconnect the connector [1].
3. Remove two screws [2], and remove the toner bottle motor [3].
4. To reinstall, reverse the order of removal.

5.5.56 Toner supply motor (M4)

1. Remove the hopper drive unit.
See P.92

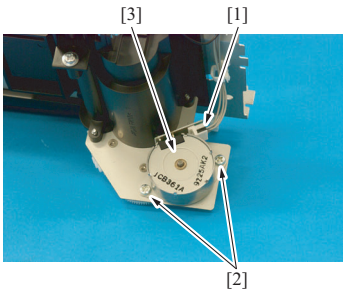

A1UDF2C141DA

2. Disconnect the connector [1].
3. Remove two screws [2], and remove the toner supply motor [3].
4. To reinstall, reverse the order of removal.

5.5.57 Switchback motor (M91)

1. Remove the fusing unit.
See P.57
2. Remove the switchback unit.
See P.89

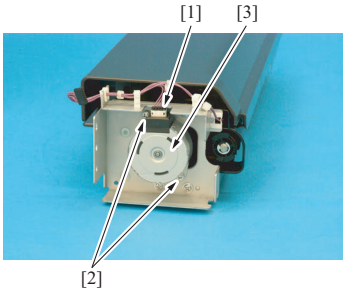

A1UDF2C142DA

3. Disconnect the connector [1].
4. Remove two screws [2], and remove the switchback motor [3].
5. To reinstall, reverse the order of removal.

5.5.58 Tray 1 lift-up motor (M11)

1. Remove the rear cover/1.
   See P.68
2. Remove the lower rear cover.
   See P.68

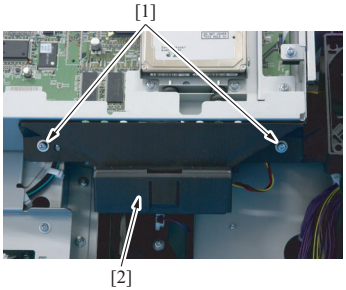

A1UDF2C143DA

3. Remove two screws [1], and remove the MFP board cooling fan motor assy [2].

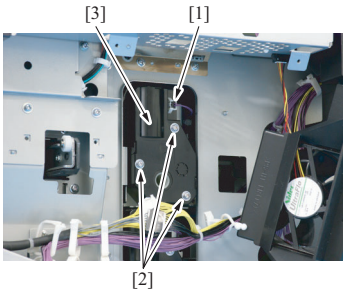

A1UDF2C144DA

4. Disconnect the connector [1].
5. Remove three screws [2], and remove the tray 1 lift-up motor [3].
6. To reinstall, reverse the order of removal.

5.5.59 Tray 2 lift-up motor (M21)

1. Remove the lower rear cover.
   See P.68

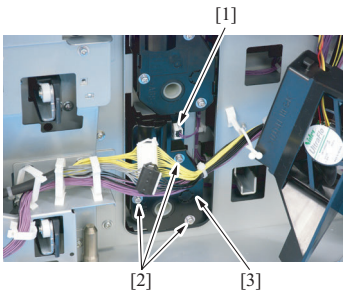

A1UDF2C145DA

2. Disconnect the connector [1].
3. Remove three screws [2], and remove the tray 2 lift-up motor [3].
4. To reinstall, reverse the order of removal.

5.5.60 Power supply cooling fan motor (FM1)

1. Remove the left cover.
   See P.66
2. Remove the exit tray.
   See P.66

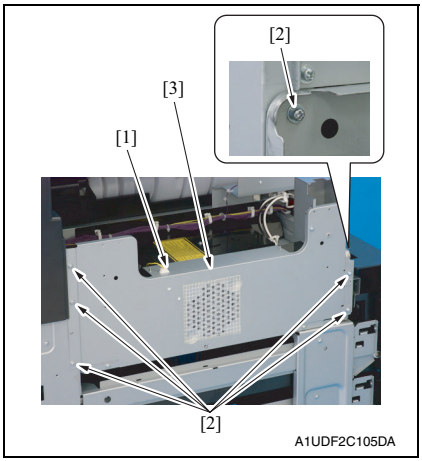

3. Disconnect the connector [1].
4. Remove six screws [2], and remove the DC power supply protective shield [3].

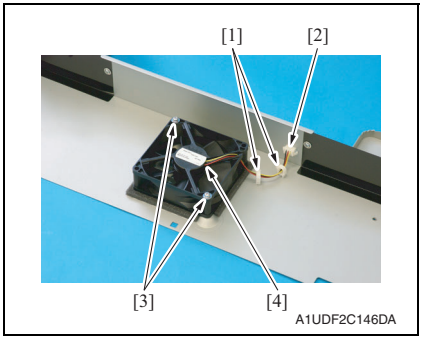

5. Remove the harness from two wire saddle [1], and disconnect the connector [2].
6. Remove two screws [3], and remove the power supply cooling fan motor [4].
7. To reinstall, reverse the order of removal.

5.5.61 Cooling fan motor (FM2)

1. Open the right door.

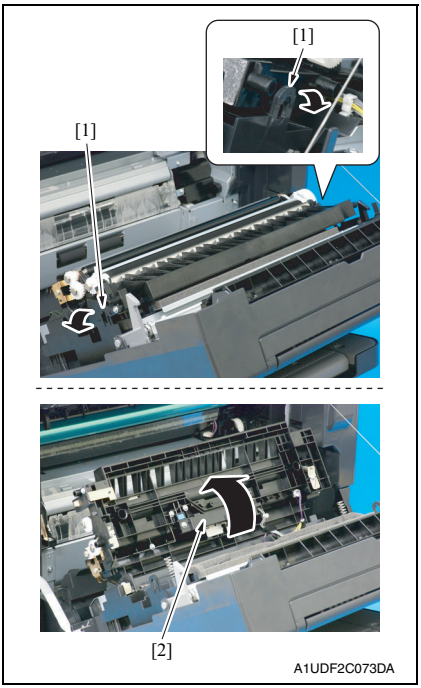

2. Widen two tabs [1] in the direction of the arrow to unlock them. Then, raise the regist unit [2] as illustrated.

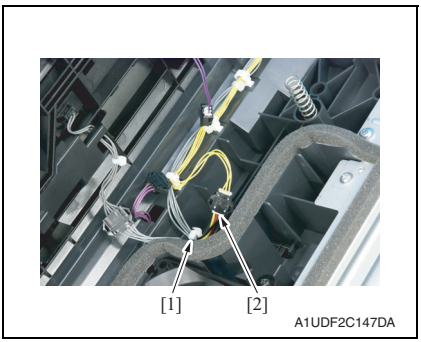

3. Remove the harness from the wire saddle [1], and disconnect the connector [2].

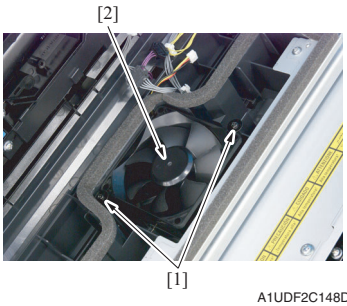

4. Remove two screws [1], and remove the cooling fan motor [2].

5. To reinstall, reverse the order of removal.

5.5.62 Fusing unit cooling fan motor (FM3)

1. Remove the fusing unit.
See P.57
2. Remove the switchback unit.
See P.89

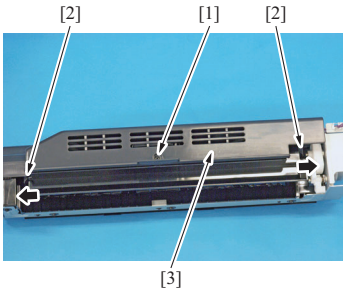

3. Remove the screw [1].
4. Unlock two locks [2], and remove the switchback unit cover [3].

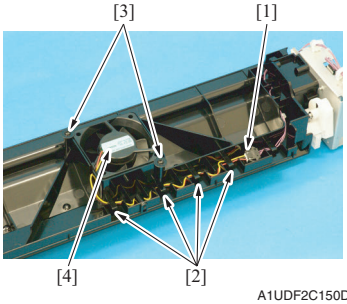

5. Disconnect the connector [1].
6. Remove the harness from four guides [2].
7. Remove two screws [3], and remove fusing unit cooling fan motor [4].

8. To reinstall, reverse the order of removal.

5.5.63 Toner suction fan motor (FM4)

1. Remove the rear cover/2.
   See P.68
2. Remove the lower rear cover.
   See P.68

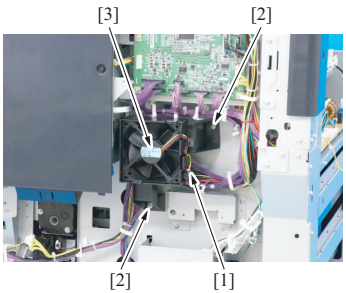

A1UDF2C151DA

3. Disconnect the connector [1].
4. Remove two screws [2], and remove toner suction fan motor [3].

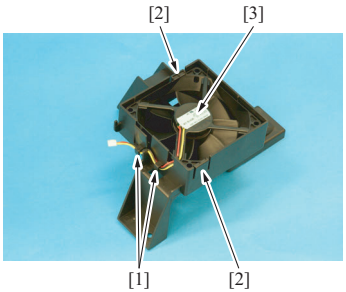

A1UDF2C152DA

5. Remove the harness from guide [1].
6. Unhook two tabs [2], and remove the toner suction fan motor [3].
7. To reinstall, reverse the order of removal.

5.5.64 MFP board cooling fan motor (FM5)

1. Remove the rear cover/1.
See P.68
2. Remove the lower rear cover.
See P.68

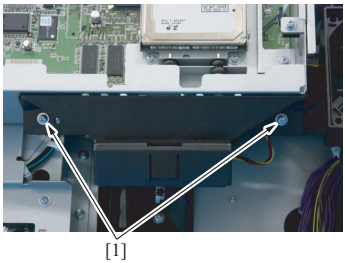

A1UDF2C153DA

3. Remove two screws [1].

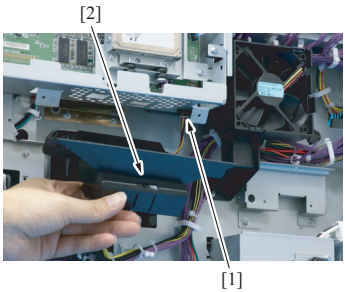

A1UDF2C154DA

4. Disconnect the connector [1], and remove the MFP board cooling fan motor assy [2].

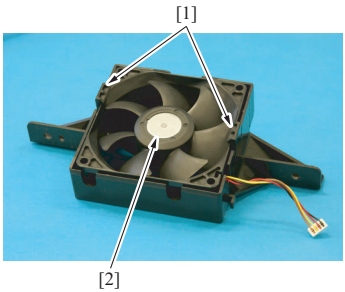

A1UDF2C155DA

5. Unhook two tabs [1], and remove the MFP board cooling fan motor [2].

6. To reinstall, reverse the order of removal.

5.5.65 Tray 1 paper feed clutch (CL11)

1. Remove the tray 1 paper feed unit.
See P.79

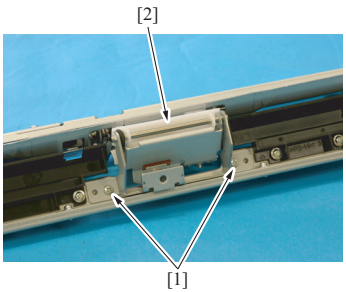

A1UDF2C017DA

2. Remove two screws [1], and remove the tray 1 separation roller unit [2].

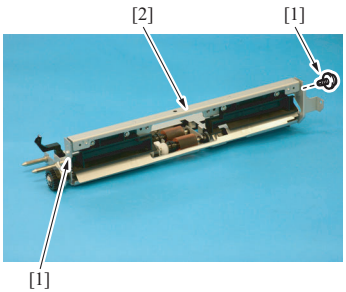

A1UDF2C008DA

3. Remove two screws [1], and remove the separation roller unit attachment plate [2].

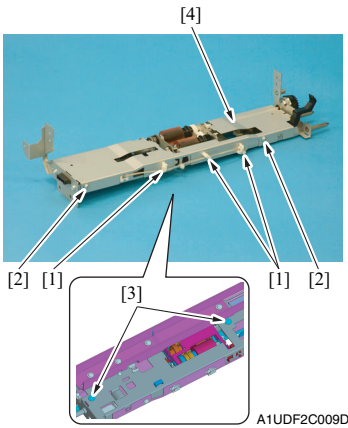

A1UDF2C009DA

4. Remove the harness from three wire saddles [1].
5. Remove two screws [2] and two shoulder screws [3], and remove the tray 1 paper feed roller cover [4].

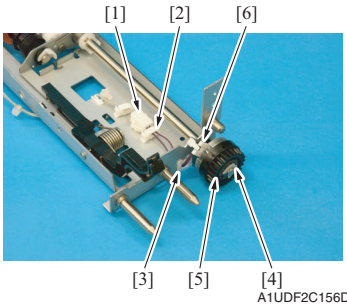

6. Disconnect the connector [1].
7. Remove the harness from the wire saddle [2] and the edge cover [3].
8. Remove the C-ring [4], and remove the tray 1 paper feed clutch [5].

NOTE

- **When mounting the paper feed tray 1 paper feed clutch, set the convex part of the stopper into the concave part [6] of the paper feed tray 1 paper feed clutch [5].**

9. To reinstall, reverse the order of removal.

5.5.66 Tray 2 paper feed clutch (CL21)

1. Remove the tray 2 paper feed unit.
See P.80

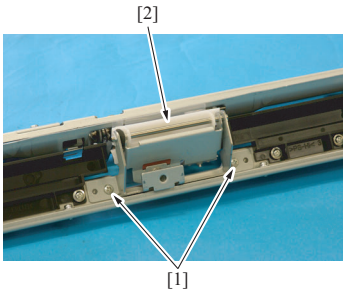

2. Remove two screws [1], and remove the tray 2 separation roller unit [2].

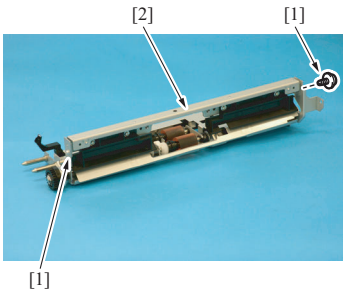

3. Remove two screws [1], and remove the separation roller unit attachment plate [2].

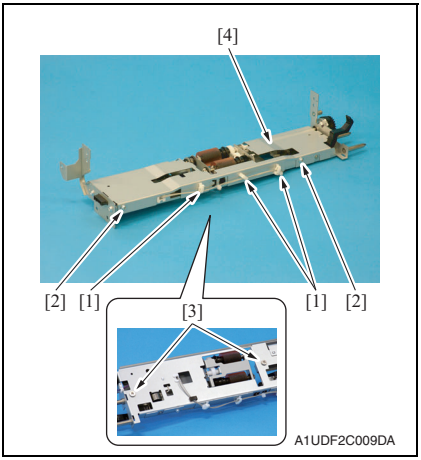

4. Remove the harness from three wire saddles [1].
5. Remove two screws [2] and two shoulder screws [3], and remove the tray 2 paper feed roller cover [4].

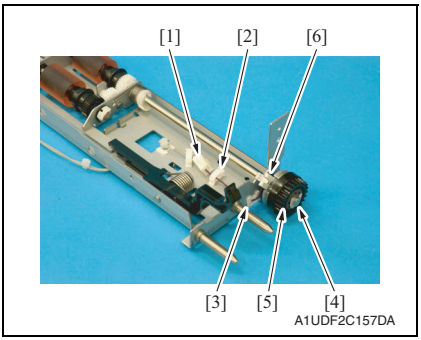

6. Disconnect the connector [1].
7. Remove the harness from the wire saddle [2] and the edge cover [3].
8. Remove the C-ring [4], and remove the tray 2 paper feed clutch [5].

NOTE

- **When mounting the paper feed tray 2 paper feed clutch, set the convex part of the stopper into the concave part [6] of the paper feed tray 2 paper feed clutch [5].**

9. To reinstall, reverse the order of removal.

5.5.67 Tray 2 vertical transport clutch (CL22)

1. Remove the conveyance unit.
See P.91

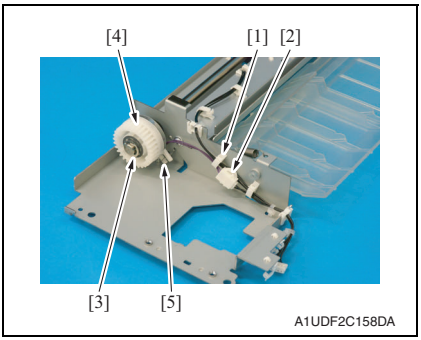

2. Remove the harness from the wire saddle [1], and disconnect the connector [2].
3. Remove the E-ring [3], and remove the tray 2 vertical transport clutch [4].

NOTE

- **When mounting the tray 2 vertical transport clutch, set the convex part of the stopper into the concave part [5] of the tray 2 vertical transport clutch [4].**

4. To reinstall, reverse the order of removal.

5.5.68 Manual paper feed clutch (CL81)

1. Remove the manual bypass tray unit.
See P.90

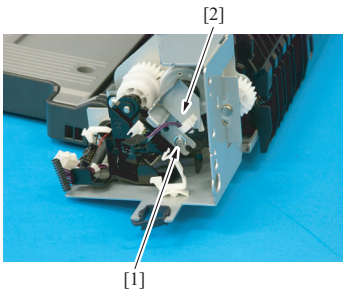

A1UDF2C159DA

2. Remove the screw [1], and remove the sensor assy [2].

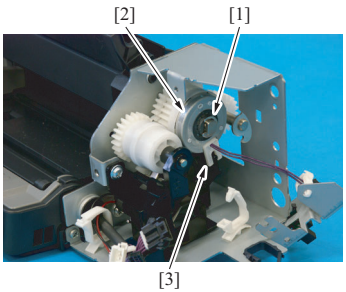

A1UDF2C160DA

3. Remove the E-ring [1], and remove the manual paper feed clutch [2].

NOTE

- **When mounting the manual paper feed clutch, set the convex part of the stopper into the concave part [3] of the manual paper feed clutch [2].**

4. To reinstall, reverse the order of removal.

5.5.69 Registration clutch (CL1)

1. Open the right door.
2. Remove the regist unit.
See P.88

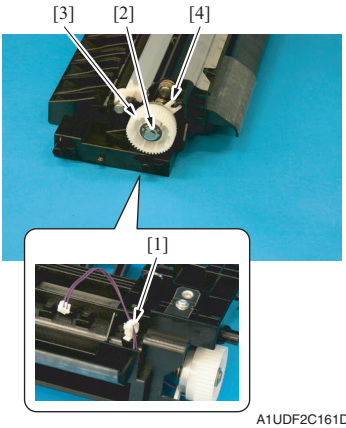

A1UDF2C161DA

3. Remove the harness from the wire saddle [1].
4. Remove the E-ring [2], and remove the registration clutch [3].

NOTE

- **When mounting the registration clutch, set the convex part of the stopper into the concave part [4] of the registration clutch [3].**

5. To reinstall, reverse the order of removal.

5.5.70 Manual pick-up solenoid (SD81)

1. Remove the manual paper feed clutch.
See P.127

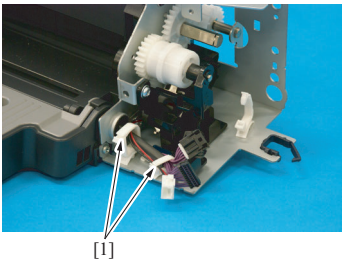

A1UDF2C162DA

2. Remove the harness from two wire saddles [1].

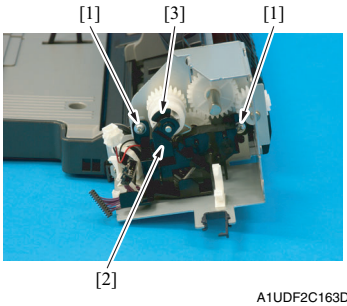

3. Remove two screws [1], and remove the manual pick-up solenoid assy [2].

NOTE

- **Use care not to lose the actuator [3].**

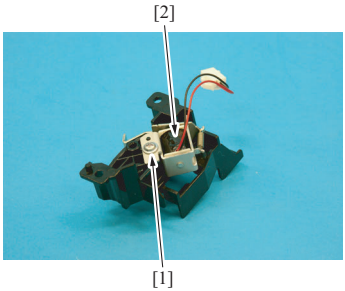

4. Remove the screws [1], and remove the manual pick-up solenoid [2].

5. To reinstall, reverse the order of removal.

5.5.71 Temperature/humidity sensor (TEM/HUM)

1. Remove the lower rear cover.
See P.68

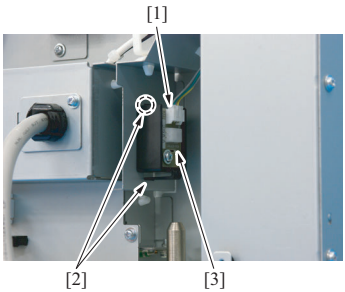

2. Disconnect the connector [1].
3. Unhook two tabs [2], and remove the temperature/humidity sensor assy [3].

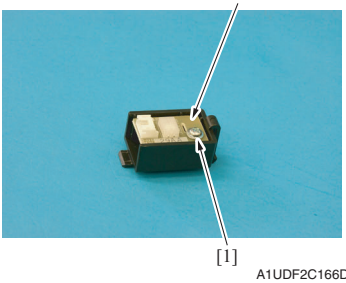

A1UDF2C166DA

4. Remove the screw [1], and remove the temperature/humidity sensor [2].

5. To reinstall, reverse the order of removal.

5.5.72 Scanner drive cable

A. Removal procedure

1. Remove the scanner front cover.
   See P.73
2. Remove the exposure unit.
   See P.86
3. Remove the scanner motor.
   See P.112

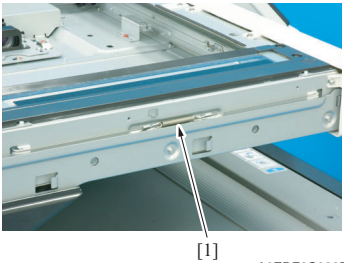

A0EDF2C228DA

4. Remove the hook side spring [1] of the scanner drive cables.

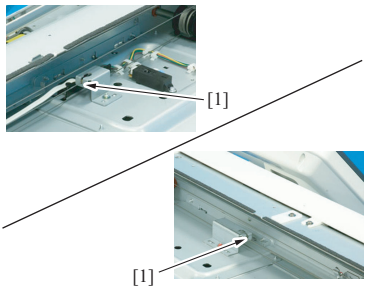

A0EDF2C229DA

5. Remove the bead side [1] of the scanner drive cables from the adjustment anchor.

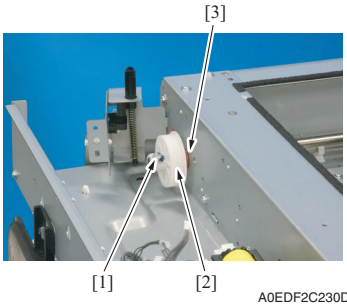

6. Remove the screw [1], and remove the scanner drive gear [2].
7. Remove the bearing [3].

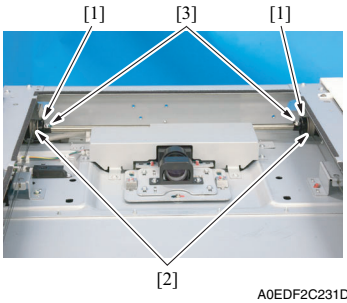

8. Remove the scanner drive cables [2] from each pulley [1].
9. Remove the screw [3] each, and remove two pulleys [1] from the shaft.

B. Reinstall procedure

(1) Overall figure

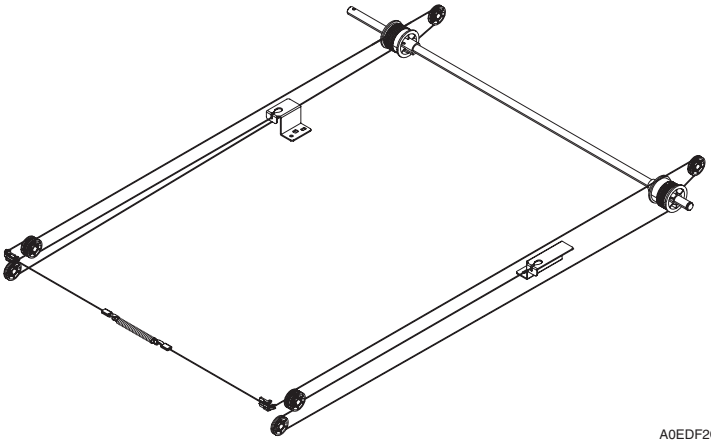

(2) Winding of the scanner drive cables

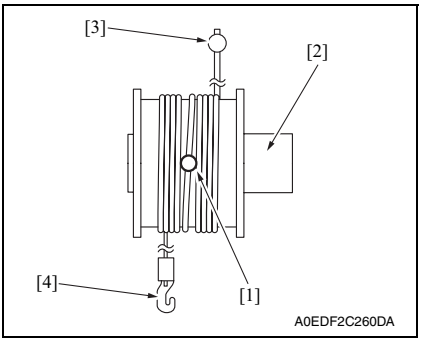

<Front side>

1. Set the round bead [1] of the scanner drive cable (silver) into the hole of the pulley [2] as shown in the illustration.

NOTE

- **Make sure that the bead securely rests in the hole of the pulley.**

2. Twist the scanner drive cable [3] (of which side has the bead at the end) around the pulley 4 times as shown in the illustration.
3. Twist the hook side scanner drive cable [4] around the pulley 4 times as shown in the illustration.

NOTE

- **Make sure that no part of the cable rides on the other.**

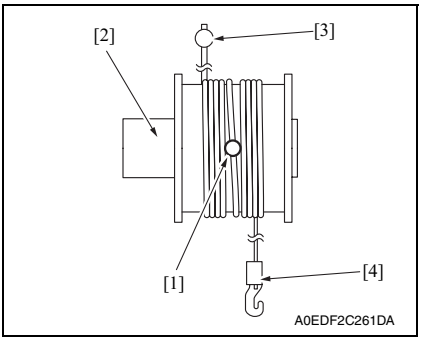

<Rear side>

4. Set the round bead [1] of the scanner drive cable (black) into the hole of the pulley [2] as shown in the illustration.

NOTE

- **Make sure that the bead securely rests in the hole of the pulley.**

5. Twist the scanner drive cable [3] (of which side has the bead at the end) around the pulley 4 times as shown in the illustration.
6. Twist the hook side scanner drive cable [4] around the pulley 4 times as shown in the illustration.

NOTE

- **Make sure that no part of the cable rides on the other.**

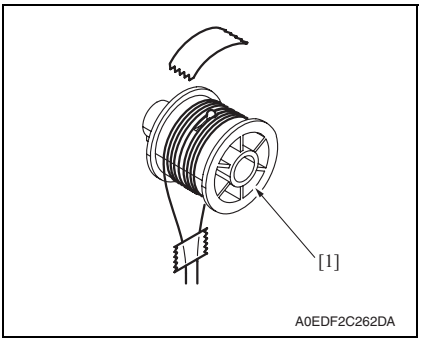

<Same for the front and the rear>

7. Apply the tape to fix the scanner drive cable to the pulley [1].

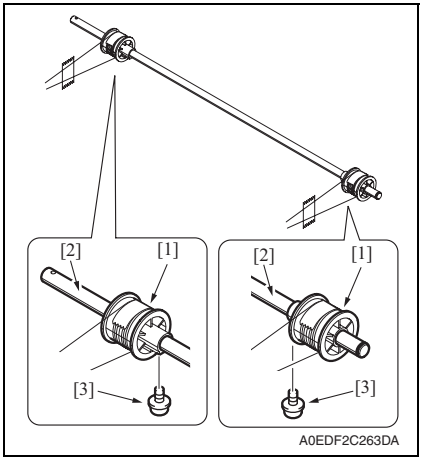

<Same for the front and the rear>

8. Put the front/rear pulleys [1] into the shaft [2], and fix them with one screw each [3].

NOTE

- **Set the pulley at the direction as shown in the illustration.**
- **Fix the pulley at the position as shown in the illustration.**
- **Apply the screw lock on the screw.**

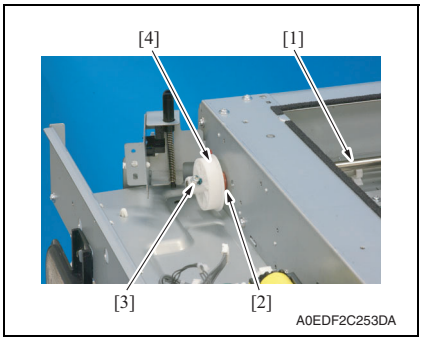

<Same for the front and the rear>

9. Install the shaft [1] and the bearing [2].

10. Install the gear [4] with the screw [3].

NOTE

- **Apply the screw lock on the screw.**

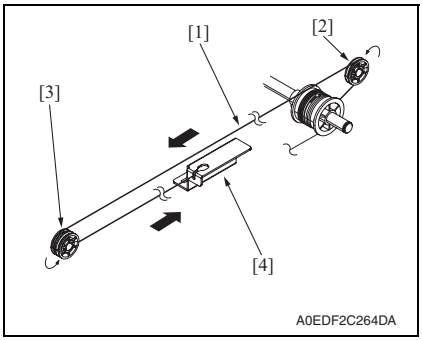

<Front side>

11. Run the bead side scanner drive cable [1] from the pulley B [2] to the pulley C [3]. Attach the bead to the adjustment anchor [4].

NOTE

- **Make the cable run inside the rear groove of the pulley C.**

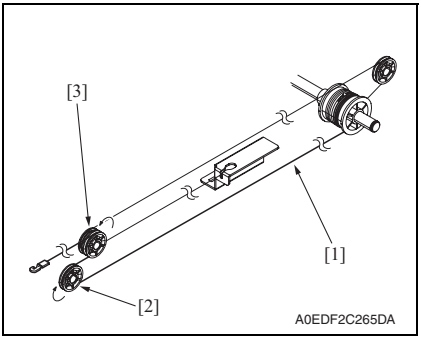

<Front side>

12. Run the hook side scanner drive cable [1] around the pulley D [2] and the pulley C [3] in this order.

NOTE

- **Make the cable run inside the front groove of the pulley D [2].**

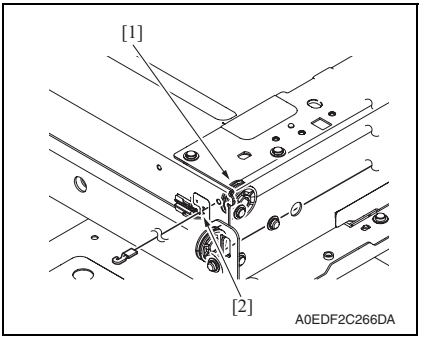

<Front side>

13. Run the scanner drive cable from the pulley C [1] to the hole [2] on the scanner left frame, and pass the cable through the hole [2].

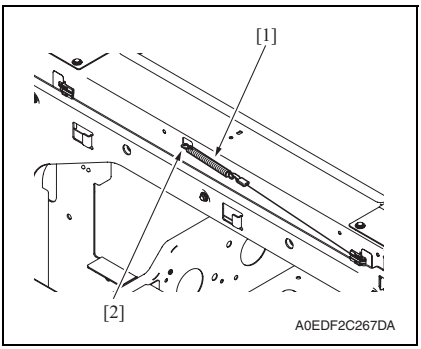

<Front side>

14. Attach the spring [1] to the cable and attach the other end of the spring to the hook [2] on the scanner left frame.

<Rear side>

15. Install the scanner drive cable with the same procedure as the front one.

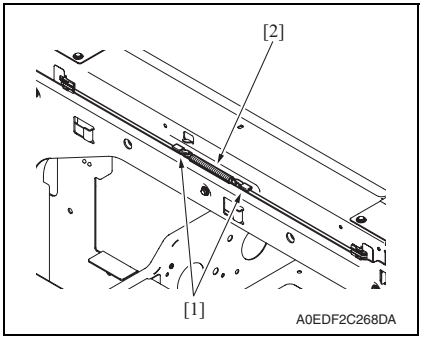

16. Attach the spring [2] to the hooks [1] of the front and rear scanner drive cables.

17. Remove the tape that fixes the front/rear pulleys.
18. Adjust the positioning of the exposure unit and mirrors unit.
See P.564
19. Perform the following setting.
[Service Mode] → [Machine] → [Scan Area] → [Sub Scan Zoom Adj.]
See P.375
20. Perform the following setting.
[Service Mode] → [ADF] → [Read Pos Adj]
See P.489

5.6 Cleaning procedure

NOTE

- **The alcohol described in the cleaning procedure represents the ethanol isopropyl alcohol.**

5.6.1 Tray 1 feed roller, tray 1 pick-up roller, tray 1 separation roller

1. Remove the tray 1 paper feed unit.
See P.79

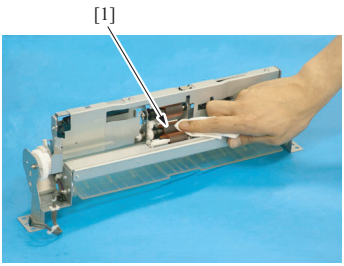

A0EDF2C233DA

2. Using a cleaning pad dampened with alcohol, wipe the tray 1 feed roller [1] clean of dirt.

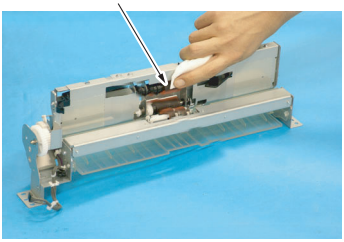

A0EDF2C234DA

3. Using a cleaning pad dampened with alcohol, wipe the tray 1 pick-up roller [1] clean of dirt.

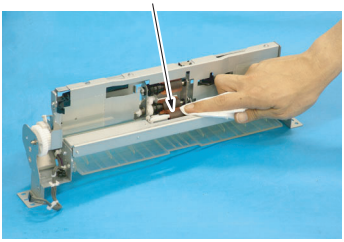

A0EDF2C235DA

4. Using a cleaning pad dampened with alcohol, wipe the tray 1 separation roller [1] clean of dirt.

5.6.2 Tray 2 feed roller, tray 2 pick-up roller, tray 2 separation roller

1. Remove the tray 2 paper feed unit.
See P.80

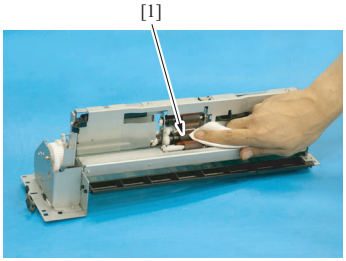

A0EDF2C236DA

2. Using a cleaning pad dampened with alcohol, wipe the tray 2 feed roller [1] clean of dirt.

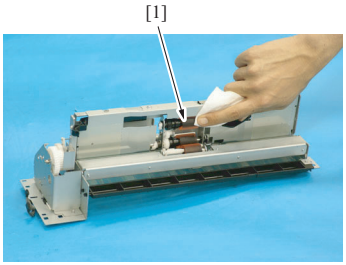

A0EDF2C237DA

3. Using a cleaning pad dampened with alcohol, wipe the tray 2 pick-up roller [1] clean of dirt.

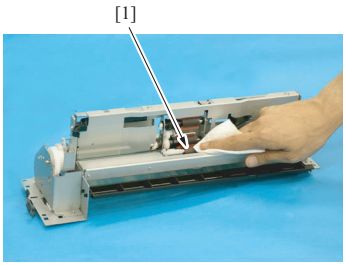

A0EDF2C238DA

4. Using a cleaning pad dampened with alcohol, wipe the tray 2 separation roller [1] clean of dirt.

5.6.3 Tray 2 transport roller

1. Open the right door.

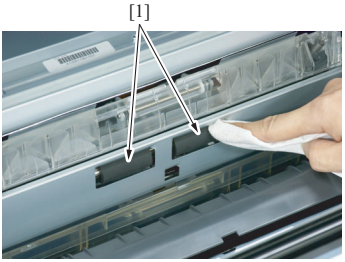

A1UDF2C167DA

2. Using a cleaning pad dampened with alcohol, wipe the tray 2 transport rollers [1] clean of dirt.

5.6.4 Manual bypass tray feed roller

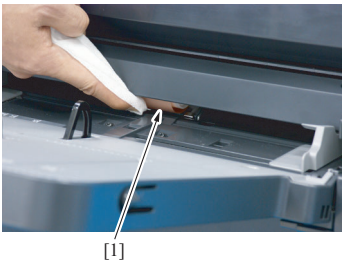

A1UDF2C168DA

1. Using a cleaning pad dampened with alcohol, wipe the manual bypass tray feed roller [1] clean of dirt.

5.6.5 Manual bypass tray separation roller

1. Remove the manual bypass tray separation roller unit.
See P.46

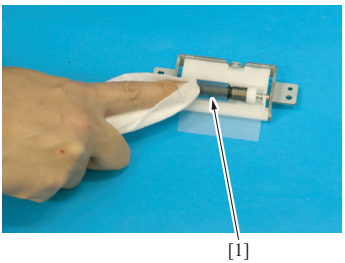

A1UDF2C169DA

2. Using a cleaning pad dampened with alcohol, wipe the manual bypass tray separation roller [1] clean of dirt.

5.6.6 Original glass

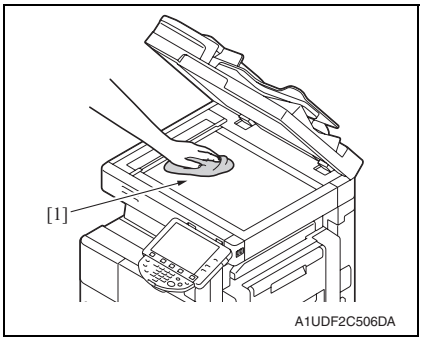

1. Using a cleaning pad dampened with alcohol, wipe the original glass [1] clean of dirt.

5.6.7 Scanner rails

1. Remove the original glass.
See P.74

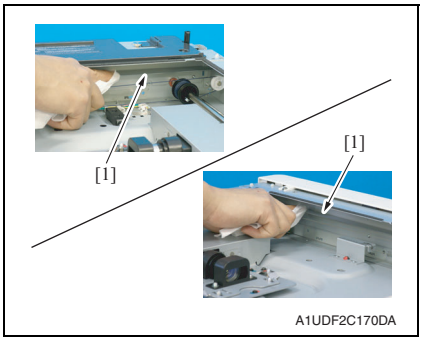

2. Using a cleaning pad dampened with alcohol, wipe the scanner rails [1] clean of dirt.

NOTE

- **Apply lubricant after cleaning.**

5.6.8 Mirrors (1st/2nd/3rd)

1. Remove the original glass.
See P.74

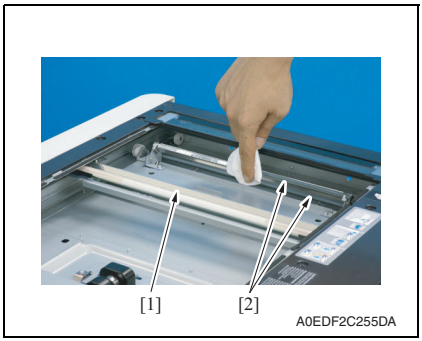

2. Using a cleaning pad dampened with alcohol, wipe the mirror 1 [1] and mirror 2/3 [2].

5.6.9 Lens

1. Remove the original glass.
See P.74

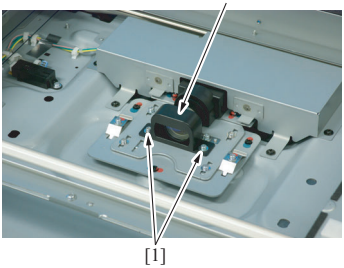

A1UDF2C171DA

2. Remove two screws [1] and lens cover [2].

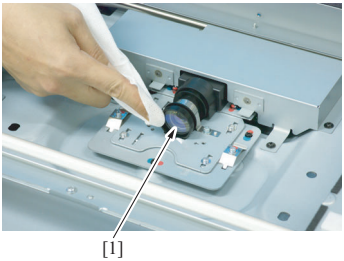

A1UDF2C172DA

3. Using a cleaning pad dampened with alcohol, wipe the lens [1] clean of dirt.

5.6.10 CCD sensor

1. Remove the original glass.
See P.74

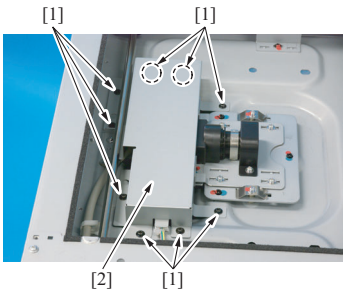

A1UDF2C067DA

2. Remove nine screws [1], and remove the CCD board protective shield [2].

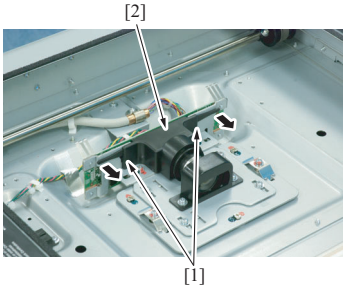

A0EDF2C245DA

3. Unhook two tabs [1], and remove the CCD sensor cover [2].

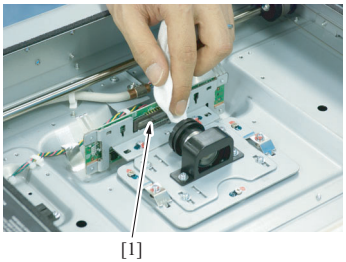

A0EDF2C246DA

4. Using a cleaning pad dampened with alcohol, wipe the CCD sensor [1] clean of dirt.

6. SERVICE TOOL

6.1 Service material list

Name	Shape	Material No.	Remarks
Cleaning pad	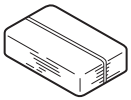 A02EF2C526DA	000V-18-1	10pcs/1pack
Isopropyl alcohol	A00KF2C506DA	—	

7. FIRMWARE REWRITING

7.1 Outline

- There are two ways to update the firmware: One is by directly connecting with the main body using the USB memory device, and the other is by downloading over a network using the Internet ISW.

NOTE

- **The settings in the "Utility" mode and the "Service Mode" will not be changed, when the firmware is updated.**

7.2 USB memory

7.2.1 Preparation

- Conditions for USB memory which can be used for updating the firmware are as follows:
  - Without security function added (security function can be turned off)
  - Memory with 1 GB to 2 GB are recommended (One with 4 GB or more may not operate)
  - Corresponds to USB 2.0
  - Formatted with FAT32 type
  - A USB flash memory that appears as multiple drives on a computer cannot be used.

7.2.2 Procedure

1. Connect the USB to the PC, and copy the firmware data to the USB memory.

NOTE

- **The firmware data to be updated must be copied to the root directory with the file name “A1UDFW. tar.”**

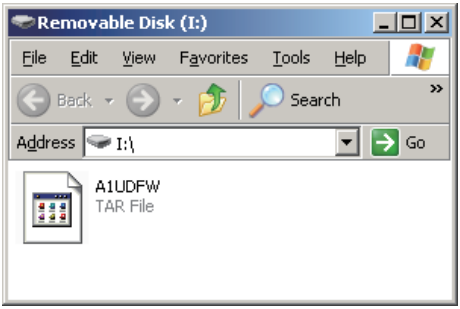

A1UDF2E561DA

- **More than one firmware data with a single model or multiple models can be stored in the USB memory. (Maximum of fifteen files)**
  When storing more than one firmware data, make a folder with a name “(model code) FW” (“A1UDFW” for this machine) right under the root directory.
  (File names can be set arbitrarily)
- **When making a folder and storing more than one firmware data, it is also necessary to copy the firmware data “A0EDFW. tar” to the root directly.**

2. Turn OFF the main power switch and the sub power switch.

3. Remove the screw [1].
4. Lift up the cover [2] of the service port.
5. Insert the USB memory device to the service port [3] for service.

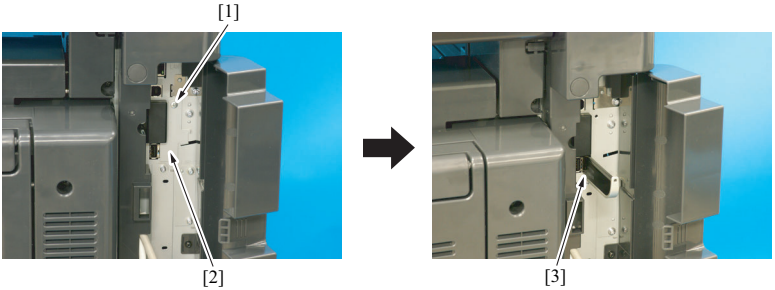

A1UDF2C173DA

NOTE

- **USB memory must be connected with the main power switch/sub power switch off.**
- **When updating the firmware, use the service port for the service. It cannot be updated when connected to another service port.**

6. Turn ON the main power switch and the sub power switch.
7. Control panel shows F/W items to be updated, and select the particular type of F/W to be updated. (Select [YES].)

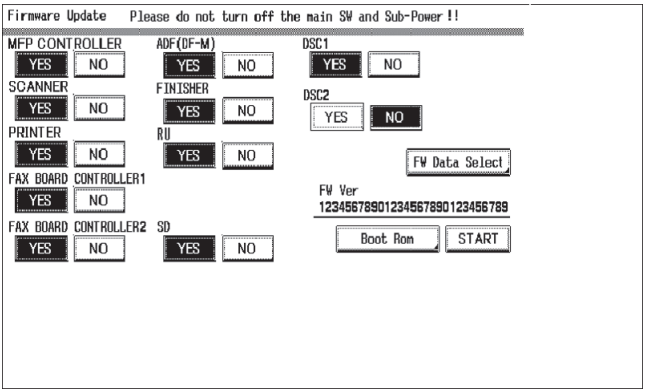

A1UDF2C536DA

F/W to be updated	Appropriate board	Remark
MFP CONTROLLER	MFP board (MFPB)	
SCANNER	MFP board (MFPB)	
PRINTER	Printer control board (PRCB)	
FAX BOARD CONTROLLER1	Fax board (Main)	Only when the FK-508 is mounted
FAX BOARD CONTROLLER2	Fax board (Sub)	Only when the FK-508 is mounted
ADF (DF-M)	DF control board (DFCB)	

F/W to be updated	Appropriate board	Remark
FINISHER	FNS control board (FSCB)	Only when the FS-527/529 is mounted
RU	Transfer control board (TRCB)	
SD	SD drive board (SDDB)	Only when the SD-509 is mounted
DSC1	DSC board	Only when the SC-507 is mounted
DSC2	Not used	

NOTE

- **Unless one of the keys on the control panel is pressed, firmware is automatically updated after 30 seconds when the main power switch/sub power switch is turned on.**
- **When the BootRom file is in the firmware data, [RootRom] key is displayed. Pressing the key updates data.**
- **When more than one firmware are stored in step 1, pressing [FW Data Select] enables selection. (Data of other models cannot be selected.)**
  (Data with * at the left top of data selection screen will be the default data copied to the root directly in the USB memory.)

8. Press the [START]. (At this time, the Start key starts blinking red.)
9. Check that the control panel shows the message indicating that the data has been rewritten correctly ([Downloading Completed]). Check also the check sum value ([Check Sum ####]) shown on the control panel. (The Start key lights blue.)
10. Turn OFF the main power switch and the sub power switch.
11. Remove the USB memory device, and fix the cover of the USB port using a screw.
12. Turn ON the main power switch and the sub power switch.

NOTE

- **When turning the main power switch ON for the first time after the firmware is updated, data may sometimes be internally updated.**
  In that case, the following message will be displayed. Never turn the main power switch OFF until either the serial number input screen or the trouble code screen is displayed.

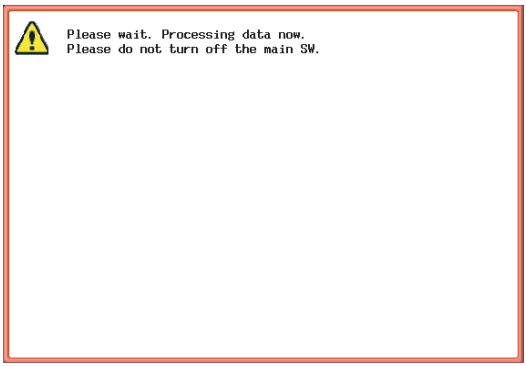

A00JF2E582DA

13. Call the Service Mode to the screen.
14. Select [Firmware Version].

15. Make sure if the version of firmware is updated.

7.2.3 Action when data transfer fails

- If “NG” appears on the control panel, indicating that rewriting has been unsuccessful (in which case the Start key lights up red), take the following steps.

1. Perform the data rewriting procedure again.
2. If the procedure is abnormally terminated, change the USB memory for a new one and try another rewriting sequence.
3. If the procedure is still abnormally terminated, change the board that has caused “NG” and carry out data rewriting procedure.

F/W to be updated	Appropriate board	Remark
MFP CONTROLLER	MFP board (MFPB)	
SCANNER	MFP board (MFPB)	
PRINTER	Printer control board (PRCB)	
FAX BOARD CONTROLLER1	Fax board (Main)	Only when the FK-508 is mounted
FAX BOARD CONTROLLER2	Fax board (Sub)	Only when the FK-508 is mounted
ADF (DF-M)	DF control board (DFCB)	
FINISHER	FNS control board (FSCB)	Only when the FS-527/529 is mounted
RU	Transfer control board (TRCB)	
SD	SD drive board (SDDB)	Only when the SD-509 is mounted
DSC1	DSC board	Only when the SC-507 is mounted
DSC2	Not used	

7.3 Updating the firmware with the Internet ISW

7.3.1 Outline

- [Internet ISW] is the system which gives the instruction for updating the firmware with the control panel of the main body, so the main body will automatically receive the firmware from the program server over a network for updating. With the Internet ISW, the firmware can be updated when the CE is at the user's without firmware data.

7.3.2 Service environment

The following conditions are necessary for using the Internet ISW function.
- The main body is connected to such a network environment that the firmware can be downloaded on the internet using the ftp or http protocol.

The "Internet ISW" will not operate under the following conditions.
- Main power switch is set to OFF.
- Sub power switch is set to OFF.
- When the following setting is set to "ON":
  [Administrator Setting] → [Security Setting] → [Enhanced Security Mode]
- Machine is operating, or there are jobs present (including appointed jobs).
- Machine is in idle with suspended job
- Paper jam has occurred
- Image file is in the memory
- Model or the circuit board of the program does not match

7.3.3 Preparations for firmware rewriting

- For using the Internet ISW, the network parameter, program server address as well as firewall address need to be set to the main body.
- For details of each setting item, refer to Adjustment/Setting "Internet ISW".
  See P.541

A. Internet ISW Set

1. Call the Service Mode to the screen.
2. Touch [Internet ISW Set] which is available from [Internet ISW].

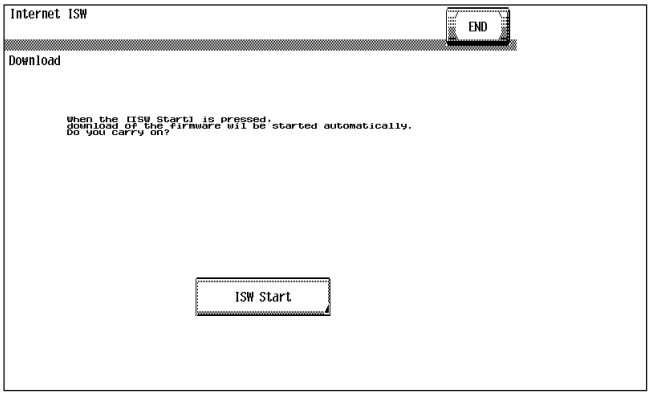

A00JF2E585DA

3. Touch [ON], and touch [END].

NOTE

- **Settings such as server setting, etc. will be available by selecting "ON" on this setting.**
- **When the following setting is set to "ON", "ON" cannot be selected on this setting. [Administrator Setting] → [Security Setting] → [Enhanced Security Mode]**

B. Protocol setting

- **It performs the setting concerning the protocol (ftp or http) for connecting to the Internet ISW.**
- **When connecting to the program server using a proxy server, perform the setting for a proxy server.**

Step	Connecting by http	Connecting by ftp
0	Select [Internet ISW] which is available from [Service Mode].	
1	Data Input Setting • Touch [HTTP Setting], and select [ON].	Data Input Setting • Touch [FTP Setting], and select [ON].
2	Connect Proxy • For connecting via proxy server, select [ON].	
3	Proxy Server • For connecting via proxy server, set the proxy server address and the port number. *1.* Select the [Server Address], and set the proxy server address by IP addressing scheme or FQDN scheme. *2.* Select [Port Number], and set the port number for the proxy server from 1 through 65535.	
4	Proxy Authentication • Set the login name and the password which may be necessary for authentication when accessing to the proxy server. *1.* When Authentication is necessary for accessing to the proxy server, select [Authentication], and select [ON]. *2.* Select [Log-in Name], and enter the login name on the on-screen keyboard. *3.* Select [Password], and enter the password on the on-screen keyboard.	Connection Setting • Perform the setting for accessing FTP server. *1.* Select [Port Number], and set the port number for FTP server from 1 through 65535. *2.* Select [Connection Time Out], and set the time for the connection time out from 1 through 60. *3.* When connecting in PASV mode, select [PASV Mode], and select [ON]. *PASV Mode: This mode is for transferring the file with FTP under the condition where communication is restricted such as inside the firewall. Since with PASV mode, the client with restriction sets the port number, data transmission port can be secured to enable the file transmission.
5	Connection Time-Out • Select [Connection Time-Out], and set the time for the connection time out between 30 and 300 seconds.	—

C. Forwarding access setting

- To make the access setting for the program server which stores the firmware data.

1. Select [Internet ISW] which is available from [Service Mode].
2. Touch [Forwarding Access Setting].

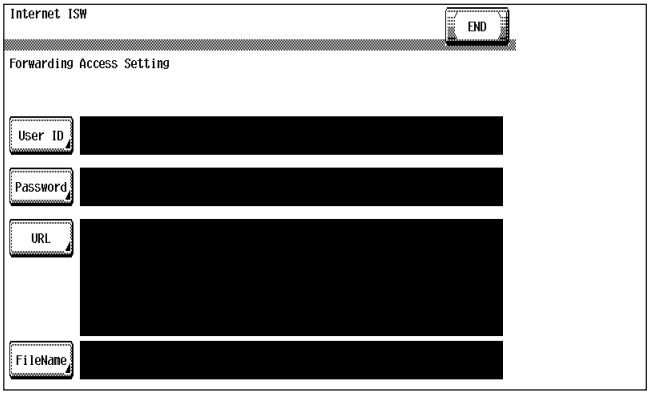

A00JF2E584DA

3. Select [User ID], and enter the user ID which is necessary for connecting to the program server on the on-screen keyboard, and touch [END].
4. Select [Password], and enter the password which is necessary for connecting to the program server on the on-screen keyboard, and touch [END].
5. Select [URL], and enter the directory which stores the program server address and the firmware on the on-screen keyboard by URL method, and touch [END].

NOTE

- **Enter the URL which matches to the protocol to be used.**

When connecting to http	**http://(host name or IP address)/directory name**
or	**https://(host name or IP address)/directory name**
When connecting to ftp	**ftp://(host name or IP address)/directory name**

6. Select [File Name], and enter the file name of the firmware data to be downloaded on the on-screen keyboard, and touch [END].
7. Touch [END] to finish setting.

7.3.4 Firmware rewriting from the control panel

NOTE

- **When performing the Internet ISW, ask the administrator for permission beforehand.**
- **DO NOT turn OFF the main/sub power switch while downloading.**

A. Conducting rewriting on the control panel.

1. Perform the following setting.
[Service Mode] → [Internet ISW] → [Download]

2. Touch [ISW Start].

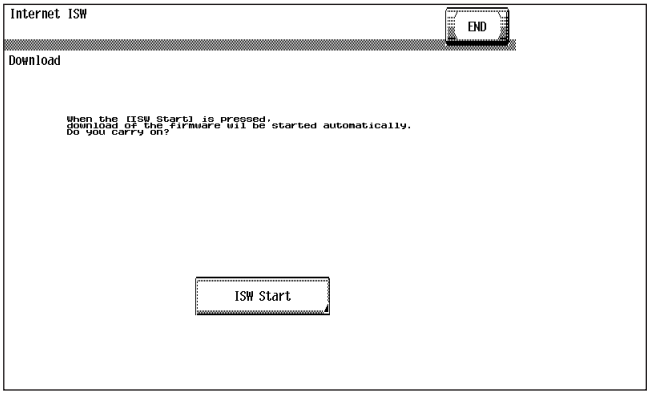

A00JF2E585DA

3. The main body will automatically start running, and it starts accessing the server.

4. Control panel shows F/W items to be updated, and select the particular type of F/W to be updated. (Select [YES].)

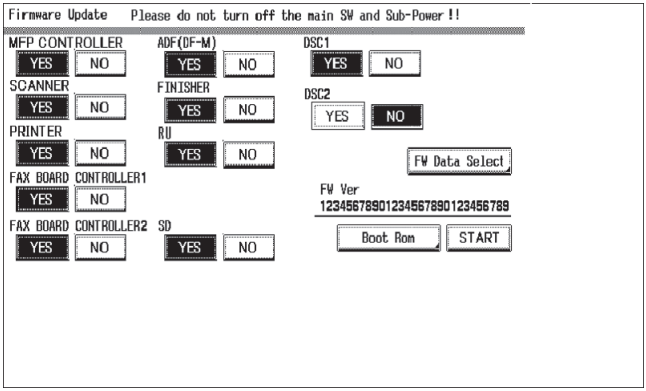

A0EDF2C514DA

F/W to be updated	Appropriate board	Remark
MFP CONTROLLER	MFP board (MFPB)	
SCANNER	MFP board (MFPB)	
PRINTER	Printer control board (PRCB)	
FAX BOARD CONTROLLER1	Fax board (Main)	Only when the FK-508 is mounted
FAX BOARD CONTROLLER2	Fax board (Sub)	Only when the FK-508 is mounted
ADF (DF-M)	DF control board (DFCB)	
FINISHER	FNS control board (FSCB)	Only when the FS-527/529 is mounted
RU	Transfer control board (TRCB)	
SD	SD drive board (SDDB)	Only when the SD-509 is mounted
DSC1	DSC board	Only when the SC-507 is mounted
DSC2	Not used	

NOTE

- **Unless one of the keys on the control panel is pressed, firmware is updated after 30 seconds when the unit has restarted.**

B. During firmware updating

1. The message to indicate the status will be displayed on the screen while connecting or transferring data.

C. Completed or failed

(1) Firmware updated normally

1. When the Firmware is normally updated, restart the main body in auto or manual mode to display the outcome, and touch [OK] to return to the main screen.

(2) Failing to update the firmware due to the network trouble

1. When updating failed to complete due to the trouble on connecting to the network, an error code and the message will be displayed.
2. Restart the main body in auto or manual mode, and touch [OK]. It can be used with the firmware version before conducting updating.
3. Check the settings for the network by error codes, and try updating again.

NOTE

- **For error codes, refer to "Error code list for the Internet ISW".**
  See P.153

(3) Failing to update the firmware after downloading has started

1. Once firmware updating has started, the ROM in the main body will be deleted.
   When it failed right after updating has started, restart the main body, and shift to the standby screen to retry downloading.
2. When updating on the control panel, touch [settings] on the standby screen, and check the Network settings again.
   Touch [Download], and restart the Internet ISW.

NOTE

- **Return to the standby screen without fail after turning the main power switch OFF/ON if the firmware is not updated.**
- **Firmware can be updated with the USB memory with the main power switch OFF.**

D. Confirming the firmware version

1. Call the Service Mode to the screen.
2. Select the [Firmware Version].
3. Check if the firmware version is updated.

7.3.5 Firmware rewriting from the CS Remote Care

- For detailed error information relating to CS Remote Care, refer to "Adjustment/Setting: CS Remote Care."
  See P.386
- For the firmware update procedure using CS Remote Care, refer to CS Remote Care Center Manual.

7.3.6 Error code list for the Internet ISW

- When a trouble occurred while conducting the Internet ISW and it was not normally connected, the message on the status and the error code will be displayed on the control panel.
  When updating with CS Remote Care, the error code will be sent to the CS Remote Care center.

<Sample display>

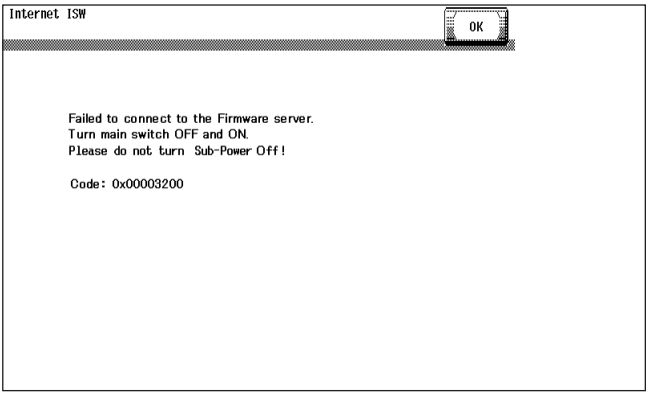

A00JF2C556DA

Error code Control panel	Description	Countermeasure
0x00000001	Illegal error on the control	• Check if the following setting is set to “Valid”. [Service Mode] → [Internet ISW] → [Internet ISW setting] • Check the status of the following setting. [Service Mode] → [Internet ISW] → [Transfer access setting] • If the above process does not solve the problem, inform the corresponding error code to the KONICA MINOLTA.
0x00000010	Parameter error	• Check if the following setting is set to “Valid”. [Service Mode] → [Internet ISW] → [Internet ISW setting] • If the above process does not solve the problem, inform the corresponding error code to KONICA MINOLTA.

Error code Control panel	Description	Countermeasure
0x00111000	Error concerning the network • Connection has been completed.	• Check the User's network environment. (LAN cable's connection) • Check the status of the following setting. [Service Mode] → [Internet ISW] → [Transfer access setting] • Check to see if the FTP server operates normally.
0x00111001	Error concerning the network • It cannot be connected to the server.	• Check the network environment of the User. • Check to see if the FTP server operates normally.
0x00111100	Error concerning the network • Communication timeout.	
0x00111101	Error concerning the network • Disconnection occurred.	• Check the network environment of the User. • Check to see if the FTP server operates normally.
0x00111110	Error concerning the network • The network is not connected.	
0x00110010	Error concerning the network • Others	
0x00001###	FTP error • Reply code when it failed to be connected.	• Check to see if FTP server normally operates. • Check the IP address, user's name, etc.
0x00002###	FTP error • Error reply code for the user command or pass command.	• Check to see if FTP server operates normally.
0x00003###	FTP error • Error reply code for CWD command.	
0x00004###	FTP error • Error reply code for the TYPE command.	• Check to see if FTP server operates normally.
0x00005###	FTP error • Error reply code for the PORT command.	
0x00006###	FTP error • Error reply code for the PASV command.	• Check to see if FTP server operates normally. • Set the PASV mode to "Invalid", and try it again.
0x00007###	FTP error • Error reply code for the RETR command.	• Check to see if FTP server operates normally. • Wait for about 30 minutes and try it again.
0x10000100	• It cannot be accepted because of the job currently being executed. • ISW being executed by other method.	• Wait for the current job to be completed and try it again.
0x10000101	• It cannot be accepted because the sub power switch is OFF.	• Turn sub power switch ON and try it again.
0x10000102	• The Internet ISW is already being executed.	• Wait for the current Internet ISW to be completed.

Error code Control panel	Description	Countermeasure
0x10000103	• It failed to prohibit the job. (It failed to lock the operation.) → It failed to lock the job because the operation is already locked with PSWC, etc.	• Check if the following setting is set to "Valid." [Service Mode] → [Internet ISW] → [Internet ISW setting] • If the above process does not solve the problem, inform the corresponding error code to the KONICA MINOLTA.
0x10000104	• There is no space for F/W data to be downloaded.	
0x10000106	• Check sum error	
0x10000107	File access error • The file downloaded has an error. • The header of the file which has been read has an error. • The size of the file to be downloaded is too large. • When it is identified to be the different type of F/W.	• Check to see if the downloaded F/W is of the correct type.
0x10000108	• The area F/W is stored is destroyed, and another ISW is necessary.	• Wait until ISW is automatically executed on MFP side.
0x20000000	The temporary error when running the subset • When starting the Internet ISW in a normal program, the rebooting will start and the Internet ISW will be executed with the subset program. During the process by the subset program, it has to be in the "Failed" status unless the Internet ISW is successfully conducted. This code is used temporarily to make it in error status.	

NOTE

- **When a code other than the ones listed above is displayed, contact KMBT and inform the error code.**

8. COMMERCIALLY AVAILABLE PARTS

8.1 Installing the key counter

8.1.1 Configuration

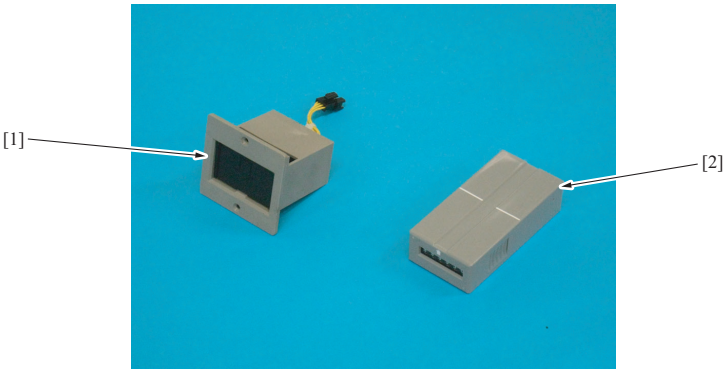

[1]	Key counter socket	[2]	Key counter

8.1.2 Procedure

NOTE

- **When mounting the key counter, the optional key counter kit KIT-1 (4623-472) is necessary.**
- **Procedure for directly mounting the key counter to the main unit is described below.**
  For mounting the key counter to the optional working table WT-506, refer to WT-506 installation manual.

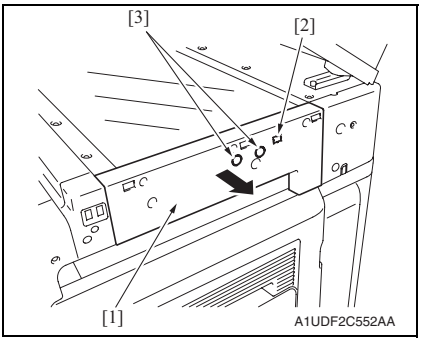

1. Remove the scanner right cover [1]. See P.70
2. Cut out the knockouts [2] of the scanner right cover.
3. Remove two caps [3].

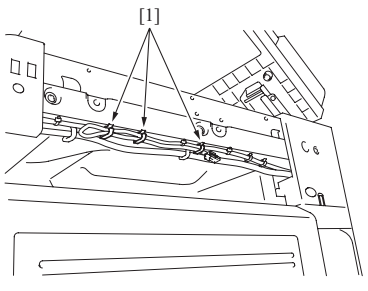

A1UDF2C553AA

4. Remove the harness for the key counter from three wire saddles [1].

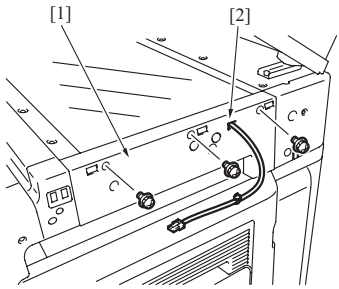

A0EDF2C526DA

5. Mount the scanner right cover [1], and insert the harness for the key counter through the hole [2] knock-outs were removed from.

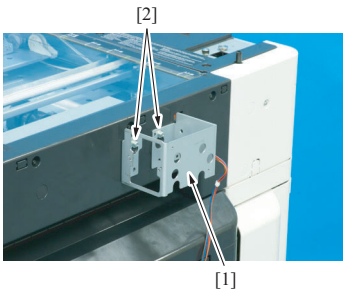

A0EDF2C248DA

6. Using two screws [2], secure the counter mounting bracket [1].

NOTE

- **Secure the counter mounting bracket passing the connector into the bracket.**
- **Use the two long screws (V116 0418 14: M4 x 18) in the key counter kit to secure the counter mounting bracket.**

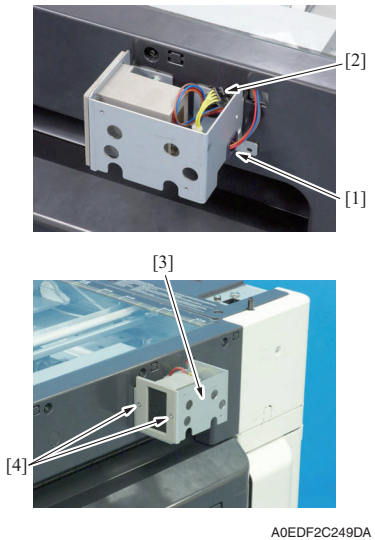

7. Mount the edge cover [1] to the counter mounting bracket and set the harness to the edge cover.
8. Connect the key counter socket connector [2].
9. Using two screws [4], secure the counter socket [3].

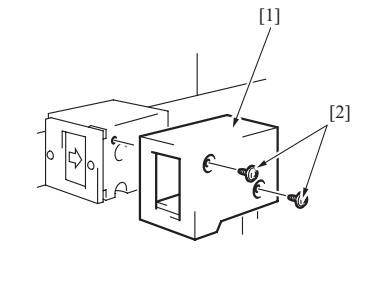

10. Using two screws [2], secure the key counter cover [1].

11. Select [Service Mode] → [Billing Setting] → [Management Function Choice] → [Key Counter Only], [Vendor 1 + Key Counter] or [Vendor 2 + Key Counter].
Set message.
For details on setting, see “ADJUSTMENT/SETTING.”
See P.555

8.2 Installing the original size detection sensor/2 (PS205)

8.2.1 Procedure

1. Remove the original glass.
See P.74

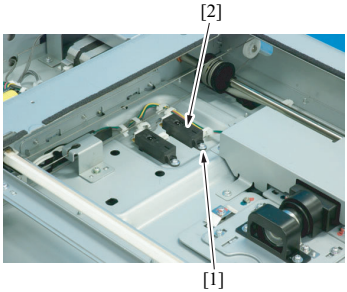

A0EDF2E531DA

2. Using the screw [1], mount the original size detection sensor/2 (PS205) [2] and fix it.

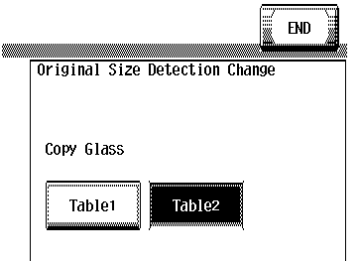

A00JF2E587DA

3. Select [Service Mode] → [System 1] → [Original Size Detection], and set the original glass to [Table2].

4. Select [Service Mode] → [Machine] → [Org. Size Detecting Sensor Adj].
See P.364

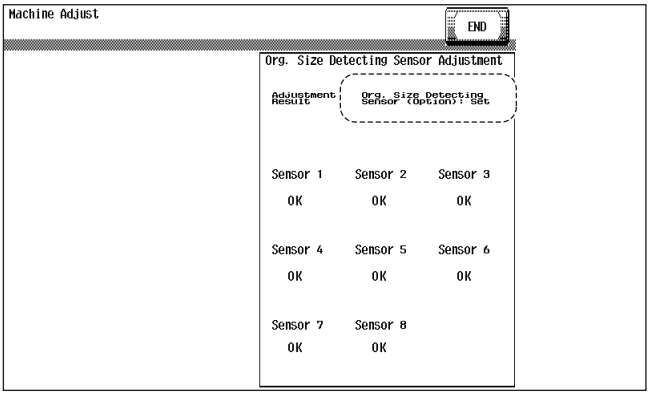

A00JF2E588DA

5. Check to make sure that the [Org. Size Detecting Sensor (Option): Set] is displayed on the original size detection sensor adjustment screen.

ADJUSTMENT/SETTING

9. HOW TO USE THE ADJUSTMENT/SETTING SECTION

- “Adjustment/Setting” contains detailed information on the adjustment items and procedures for this machine.
- Throughout this “Adjustment/Setting,” the default settings are indicated by “ ”.

Advance checks

- Before attempting to solve the customer problem, the following advance checks must be made. Check to see if:

- The power supply voltage meets the specifications.
- The power supply is properly grounded.
- The machine shares the power supply with any other machine that draws large current intermittently (e.g., elevator and air conditioner that generate electric noise).
- The installation site is environmentally appropriate: high temperature, high humidity, direct sunlight, ventilation, etc.; levelness of the installation site.
- The original has a problem that may cause a defective image.
- The density is properly selected.
- The original glass, slit glass, or related part is dirty.
- Correct paper is being used for printing.
- The units, parts, and supplies used for printing (developer, PC drum, etc.) are properly replenished and replaced when they reach the end of their useful service life.
- Toner is not running out.

⚠ CAUTION

- **To unplug the power cord of the machine before starting the service job procedures.**
- **If it is unavoidably necessary to service the machine with its power turned ON, use utmost care not to be caught in the scanner cables or gears of the exposure unit.**
- **Special care should be used when handling the fusing unit which can be extremely hot.**
- **The developing unit has a strong magnetic field. Keep watches and measuring instruments away from it.**
- **Take care not to damage the PC drum with a tool or similar device.**
- **Do not touch IC pins with bare hands.**

10. UTILITY

10.1 List of utility mode

NOTE

- **Keys displayed on screens are different depending on the setting.**
- **For displaying the keys with *, ** marks, see "Administrator Security Level."**
  See P.330
- **For displaying the keys with *** marks, see "Administrator Feature Level."**
  See P.547

Utility Mode					Ref. page
One-Touch/ User Box Registration	Create One-Touch destination	Address Book (Public)/ (Personal)	E-mail		P.177
			User Box		P.177
			Fax		P.177
			PC (SMB)		P.177
			FTP		P.178
			WebDAV		P.178
			IP Address Fax		P.178
			Internet Fax		P.178
		Group			P.178
		E-mail Settings	E-mail Subject		P.179
			E-mail Body		P.179
	Create User Box	Public/Personal User Box Confidential RX User Box			P.179
		Bulletin Board User Box			P.180
		Relay User Box			P.180
	Limiting Access to Destina-tions	Apply Levels/ Groups to Destinations	Address Book		P.181
			Group		P.181
			Program		P.181
User Settings	System Settings	Language Selection			P.182
		Measurement Unit Settings			P.182
		Paper Tray Settings	Auto Tray Selection Settings		P.182
			Auto Tray Switch ON/OFF		P.182
			No Matching Paper in Tray Setting		P.182
			Print Lists		P.183
		Auto Color Level Adjust.			P.183
		Power Save Settings*	Low Power Mode Settings*		P.183
			Sleep Mode Settings*		P.184
		Output Settings**	Print/Fax Out-put Settings**	Print**	P.184
				Fax**	
			Output Tray Settings**		P.184
		AE Level Adjustment**			P.185

Utility Mode				Ref. page
User Settings	System Settings	Auto Paper Select for Small Original		P.185
		Blank Page Print Settings**		P.185
		Page Number Print Position**		P.186
		Select Keyboard**		P.186
	Custom Display Settings	Copier Settings	Default Tab	P.187
			Shortcut Key 1	P.187
			Shortcut Key 2	
			Quick Settings 1	P.187
			Quick Settings 2	
			Quick Settings 3	
			Quick Settings 4	
			Default Tab Density Settings	P.187
		Scan/Fax Settings	Default Tab	P.188
			Program Default	P.188
			Address Book Index Default	P.188
			Shortcut Key 1	P.188
			Shortcut Key 2	
			Default Address Book	P.189
			Default Address Type	P.189
		User Box Settings	Default Tab	P.189
			Shortcut Key 1	P.189
			Shortcut Key 2	
		Copy Screen	Copy Operating Screen	P.190
		Fax Active Screen	TX Display	P.190
			RX Display	P.190
		Color Selection Settings		P.190
		Left Panel Display Default		P.191
		Search Option Settings		P.191
	Copier Settings	Auto Booklet ON when Fold & Staple		P.191
		Auto Zoom for Combine/Booklet		P.191
		Auto Sort/Group Selection		P.192
		Default Copy Settings		P.192
		Default Enlarge Display Settings		P.193
		When AMS Direction is Incorrect		P.193
		Separate Scan Output Method		P.193
		Enlargement Rotation		P.194
		Auto Zoom (Platen)*		P.194
		Auto Zoom (ADF)*		P.194
		Specify Default Tray when APS Off*		P.194
		Select Tray for Insert Sheet*		P.195
		Half-Fold Specification		P.195
		Print Jobs During Copy Operation**		P.195

Utility Mode				Ref. page
User Settings	Copier Settings	Automatic Image Rotation		P.195
		Finishing Program		P.196
		Card Shot Settings	Layout	P.196
			Zoom	
			Store Original Size	
	Scan/Fax Settings	JPEG Compression Level		P.197
		Black Compression Level		P.197
		TWAIN Lock Time		P.197
		Default Scan/Fax Settings		P.197
		Default Enlarge Display Settings		P.198
		Compact PDF/XPS Compression Level		P.198
		Color TIFF Type		P.199
		OCR Operation Setting		P.199
		Graphic Outlining		P.199
	Printer Settings	Basic Settings	PDL Setting	P.199
			Number of Copies	P.199
			Original Direction	P.200
			Spool Print Jobs in HDD before RIP	P.200
			A4/A3 ↔ LTR/LGR Auto Switch	P.200
			Banner Sheet Setting	P.200
			Binding Direction Adjustment	P.201
			Line Width Adjustment	P.201
			Gray Background Text Correction	P.201
		Paper Setting	Paper Tray	P.201
			Paper Size	P.202
			2-Sided Print	P.202
			Binding Position	P.202
			Staple	P.202
			Punch	P.202
			Banner Paper Tray	P.203
		PCL Settings	Font Settings	P.203
			Symbol Set	P.203
			Font Size	P.203
			Line/Page	P.203
			CR/LF Mapping	P.204
	Printer Settings	PS Setting	Print PS Errors	P.204
		XPS Settings	Verify XPS Digital Signature	P.204
		Print Reports	Configuration Page	P.205
			Demo Page	
			PCL Font List	
			PS Font List	
		TIFF Image Paper Setting		P.205

Utility Mode					Ref. page
User Settings	Change Password				P.206
	Change E-mail Address				P.206
	Change Icon				P.206
	Register Authentication Settings				P.207
	Registered Application Setting	Default Application Selection			P.207
	Cellular Phone/PDA Setting	Link File Error Notification			P.207
		Proxy Server Use			P.207
		Print Settings			P.207
Administrator Settings	System Settings	Power Save Settings	Low Power Mode Settings		P.208
			Sleep Mode Settings		P.208
			Power Save Key		P.208
			Enter Power Save Mode		P.209
		Output Settings	Print/Fax Output Settings		P.209
			Output Tray Settings		P.209
			Shift Output Each Job		P.210
		Date/Time Settings			P.210
		Daylight Saving Time			P.210
		Weekly Timer Settings	Weekly Timer ON/OFF Settings		P.211
			Time Settings		P.211
			Date Settings		P.211
			Select Time for Power Save		P.211
			Password for Non-Business Hours		P.211
		Restrict User Access	Copy Program Lock Settings		P.212
			Delete Saved Copy Program		P.212
			Restrict Access to Job Settings	Changing Job Priority	P.212
				Delete Other User Jobs	P.212
				Registering and Changing Addresses	P.212
				Changing Zoom Ratio	P.213
				Changing the “From” Address	P.213
				Change Registered Overlay	P.213
				Biometric/IC Card Info. Registration	P.213
			Restrict Operation	Restrict Broadcasting	P.213

Utility Mode					Ref. page
Administrator Settings	System Settings	Expert Adjustment	AE Level Adjustment		P.214
			Printer Adjustment	Leading Edge Adjustment	P.215
				Centering	P.216
				Leading Edge Adjustment (Duplex Side 2)	P.217
				Centering (Duplex 2nd Side)	P.218
				Erase Leading Edge ***	P.219
				Vertical Adjustment ***	P.220
				Media Adjustment	P.221
			Finisher Adjustment	Center Staple Position	P.222
				Half-Fold Position	P.223
				Punch Horizontal Position Adjustment	P.224
				Punch Regist Loop Size Adjustment	P.225
				Paper Alignment Plate Setting	P.225
			Paper Separation Adjustment		P.225
			Gradation Adjustment	Maximum Density Adjustment	P.226
				Gradation Adjustment	
				Initialization	
			Scanner Area ***	Scanner Adjustment: Leading Edge ***	P.229
				Scanner Adjustment: Centering ***	P.230
				Horizontal Adjustment ***	P.231
				Vertical Adjustment ***	P.232
			ADF Adjust-ment ***	Centering***	P.233
				Original Stop Position***	P.234
				Centering Auto Adjustment***	P.235
				Auto Adj. of Stop Position***	P.235
			Line Detection	Prior Detection Setting	P.236
				Feed Cleaning Settings	P.236
			User Paper Settings ***		P.237
			Erase Adjustment	Non-Image Area Erase Operation Settings	P.238
			Maximum Density Adjustment		P.238
			Drum Dry		P.238
			Replenish Toner		P.239
			PS Designer Settings		P.239
		List/Counter	Management List	Job Settings List	P.239
			Paper Size/Type Counter		P.240
			Meter Counter List		P.240
			Check Consumables List		P.240

Utility Mode						Ref. page
Administrator Settings	System Settings	Reset Settings	System Auto Reset			P.241
			Auto Reset			P.241
			Job Reset	When Account is changed		P.241
				When Original is set on ADF		P.241
				NEXT JOB	Staple Setting	P.242
					Original Set/ Bind Direction	P.242
					Reset Data After Job	P.242
		User Box Settings	Delete Unused User Box			P.242
			Delete Secure Print Documents			P.242
			Auto Delete Secure Documents			P.243
			Encrypted PDF Delete Time			P.243
			ID & Print Delete Time			P.243
			Document Hold Setting			P.243
			External Memory Function Settings			P.244
			Allow/Restrict User Box			P.244
			ID & Print Delete after Print Setting			P.244
			Document Delete Time Setting			P.245
		Standard Size Setting***	Original Glass Original Size Detect***			P.245
			Foolscap Size Setting***			P.245
		Stamp Settings	Header/Footer Settings			P.245
			Fax TX Settings			P.245
		Blank Page Print Settings				P.246
		Application Key Settings				P.246
		Skip Job Operation Settings	Fax			P.246
			Other than Fax			
		Default Bypass Paper Type Setting				P.246
		Page Number Print Position				P.247
		Advanced Preview Setting				P.247
	Administrator/Machine Settings	Administrator Registration				P.247
		Input Machine Address				P.247

Utility Mode					Ref. page
Administrator Settings	One-Touch/ User Box Registration	Create One-Touch Destination	Address Book	E-mail	P.248
				User Box	P.248
				Fax	P.248
				PC (SMB)	P.248
				FTP	P.248
				WebDAV	P.249
				IP Address Fax	P.249
				Internet Fax	P.249
			Group		P.249
			E-mail Settings	E-mail Subject	P.249
				E-mail Body	P.250
		Create User Box	Public/Personal User Box Confidential RX User Box		P.250
			Bulletin Board User Box		P.250
			Relay User Box		P.250
			Annotation User Box		P.251
		One-Touch/ User Box Registration List	Address Book List		P.251
			Group List		P.251
			Program List		P.251
			E-mail Subject/Text List		P.251
		Maximum Number of User Boxes			P.252
	User Authentication/ Account Track	General Settings			P.252
		User Authentication Settings	Administrative Setting	User Name List	P.255
				Default Function Permission	P.255
				ID & Print Settings	P.255
				ID & Print Operation Settings	P.256
				Default Operation Selection	P.256
			User Registration		P.256
			User Counter		P.257
		Account Track Settings	Account Track Registration		P.257
			Account Track Counter		P.257
		Print without Authentication			P.257
		Print Counter List			P.258
		External Server Settings			P.258
		Limiting Access to Destinations	Create Group		P.258
			Apply Levels/Groups to Destinations		P.258
			Apply Levels/Groups to Users		P.259
		Authentication Device Settings	General Settings		P.259
			Logoff Settings		P.260

Utility Mode					Ref. page
Administrator Settings	User Authentication/ Account Track	Auth/Acct Track Common Setting	Logout Confirmation Screen Display Setting		P.260
		Scan to Home Settings			P.261
		Scan to Authorized Folder Settings			P.261
	Network Settings	TCP/IP Settings	IPv4 Settings		P.262
			IPv6 Settings		P.262
			DNS Host		P.262
			DNS Domain		P.263
			DNS Server Settings(IPv4)		P.263
			DNS Server Settings(IPv6)		P.263
			IPsec Settings		P.264
			IP Filtering (Permit Access)		P.266
			IP Filtering (Deny Access)		P.266
			RAW Port Number		P.267
			LLMNR Setting		P.267
		NetWare Settings	IPX Settings		P.267
			NetWare Print Settings		P.268
			User Authentication Settings (NDS)		P.269
		HTTP Server Settings			P.270
		FTP Settings	FTP TX Settings		P.272
			FTP Server Settings		P.273
		SMB Settings	Client Settings		P.273
			Print Settings		P.274
			WINS Settings		P.274
			Direct Hosting Settings		P.275
		LDAP Settings	Enabling LDAP		P.275
			Setting Up LDAP		P.276
			Default LDAP Server Setting		P.280
		E-mail Settings	E-mail TX (SMTP)		P.280
			E-mail RX (POP)		P.283
			S/MIME Communication Settings		P.286
		SNMP Settings			P.287
		AppleTalk Settings			P.291
		Bonjour Setting			P.291
		TCP Socket Settings	TCP Socket		P.292
			TCP Socket (ASCII Mode)		P.292
		Network Fax Settings	Network Fax Function Settings	IP Address Fax Function	P.293
				Internet Fax Function	P.293
			SMTP TX Settings		P.293
			SMTP RX Settings		P.294

Utility Mode					Ref. page
Administrator Settings	Network Settings	WebDAV Settings	WebDAV Client Settings		P.294
			WebDAV Server Settings		P.296
		Web Service Settings	Web Service Common Settings		P.296
			Printer Settings		P.297
			Scanner Settings		P.298
		SSDP Settings			P.299
		Detail Settings	Device Setting		P.299
			Time Adjustment Setting		P.300
			Status Notification Setting	Register Notification Address	P.301
			Total Counter Notification Settings		P.302
			PING Confirmation		P.303
			SLP Setting		P.303
			LPD Setting		P.303
			Prefix/Suffix Setting	ON/OFF Setting	P.303
				Prefix/Suffix Setting	P.303
			Error Code Display Setting		P.304
		IEEE802.1X Authentication Settings			P.304
		Web Browser Setting			P.304
		Bluetooth Setting			P.305
Administrator Settings	Copier Settings	Auto Zoom (Platen)			P.305
		Auto Zoom (ADF)			P.305
		Specify Default Tray when APS OFF			P.305
		Select Tray for Insert Sheet			P.305
		Print Jobs During Copy Operation			P.306
		Automatic Image Rotation			P.306
		Card Shot Settings	Layout		P.306
			Zoom		
			Store Original Size		
	Printer Settings	USB Timeout			P.307
		Network Timeout			P.307
		Print XPS Errors			P.307
		PSWC Direct Print			P.307
		Assign Account to Acquire Device Info			P.308

Utility Mode					Ref. page
Administrator Settings	Fax Settings	Header Information			P.308
		Header/ Footer Position	Header Position		P.308
			Print Receiver's Name		P.308
			Footer Position		P.309
		Line Parameter Setting	Dialing Method		P.309
			Receive Mode		P.309
			Number of RX Call Rings (Receive Time Interval Setting)		P.310
			Number of Redials		P.310
			Redial Interval		P.310
			Line Monitor Sound		P.310
			Line Monitor Sound Volume (Send)		P.311
			Line Monitor Sound Volume (Receive)		P.311
		TX/RX Settings	Duplex Print (RX)		P.311
			Letter/Ledger over A4/A3		P.311
			Print Paper Selection		P.312
			Print Paper Size		P.312
			Incorrect User Box No. Entry		P.312
			Tray Selection for RX Print		P.312
			Min. Reduction for RX Print		P.312
			Print Separate Fax Pages		P.313
			File After Polling TX		P.313
			No. of Sets (RX)		P.313
			Individual Receiving Line Setup		P.313
			Individual Sender Line Setup		P.314
		Function Settings	Function ON/ OFF Setting	F-Code TX	P.314
				Relay RX	P.314
				Relay Printing	P.315
				Destination Check Display Function	P.315
				Confirm Address (TX)	P.315
				Confirm Address (Register)	P.315
			Memory RX Setting		P.316

Utility Mode					Ref. page
Administrator Settings	Fax Settings	Function Settings	Closed Network RX		P.316
			Forward TX Setting		P.316
			Incomplete TX Hold		P.317
			PC-Fax RX Setting		P.317
			TSI User Box Setting		P.317
		PBX Connection Setting			P.318
		Report Settings	Activity Report		P.318
			TX Result Report		P.319
			Sequential TX Report		P.319
			Timer Reservation TX Report		P.319
			Confidential RX Report		P.319
			Bulletin TX Report		P.319
			Relay TX Result Report		P.320
			Relay Request Report		P.320
			PC-Fax TX Error Report		P.320
			Broadcast Result Report		P.320
			TX Result Report Check		P.320
			Network Fax RX Error Report		P.321
			MDN Message		P.321
			DSN Message		P.321
			Print E-mail Message Body		P.322
		Job Settings List			P.322
		Multi Line Settings	Line Parameter Setting	Dialing Method	P.322
				Number of Rx Call Rings	P.322
				Line Monitor Sound	P.323
			Function Settings	PC-FAX TX Setting	P.323
			Multi Lines Settings		P.323
			Sender Fax No.		P.323
		Network Fax Settings	Black Compression Level		P.324
			Color/Grayscale Multi-Value Compression Method		P.324
			SIP Adaptor Connection Check		P.324
			Internet Fax Self RX Ability		P.325
			Internet Fax Advanced Settings		P.325
			IP Address Fax Operation Settings		P.326
		Fax Print Quality Settings			P.326

Utility Mode				Ref. page
Administrator Settings	System Connection	OpenAPI Settings	Access Setting	P.327
			SSL/Port Number	P.327
			Authentication	P.328
		Call Remote Center		P.328
		Automatic Prefix/Suffix Setting		P.328
		Printer Information		P.328
		Cellular Phone/PDA Setting		P.329
	Security Settings	Administrator Password		P.329
		User Box Administrator Setting		P.330
		Administrator Security Levels		P.330
		Security Details	Password Rules	P.331
			Prohibited Functions When Authentication Error	P.332
			Confidential Document Access Method	P.333
			Manual Destination Input	P.333
			Print Data Capture	P.333
			Job Log Settings	P.334
			Restrict Fax TX	P.334
			Hide Personal Information	P.334
			Hide Personal Information (MIB)	P.335
			Display Activity Log	P.335
			Initialize	P.335
			Job History Thumbnail Display	P.335
			Secure Print Only	P.336
			Copy Guard	P.336
			Password Copy	P.336
			Web browser contents access	P.336
		Enhanced Security Mode		P.337
		HDD Settings /SSD Settings	Check HDD Capacity Check SSD Capacity	P.339
			Overwrite HDD Data	P.340
			Overwrite All Data	P.341
			HDD Lock Password	P.342
			Format HDD Format SSD	P.342
			HDD Encryption Setting	P.344
		Function Management Settings	Usage Settings for Each Function	P.345
			Maximum Job Allowance	P.345
			Network Function Usage Settings	P.345
			Authentication Time Setting	P.346

Utility Mode				Ref. page
Administrator Settings	Security Settings	Stamp Settings	Apply Stamps	P.346
			Delete Registered Stamp	P.346
		Image Log Transfer Settings		P.347
		Driver Password Encryption Setting		P.347
	License Settings	Get Request Code		P.348
		Install License		P.348
		List of Enabled Functions		P.348
	OpenAPI Authentication Management Settings			P.349
Check Consumable Life		Print List		—
My Panel Settings	Language Setting			P.349
	Measurement Unit Setting			
	Copier Settings			
	Scan/Fax Settings			
	Color Selection Setting			
	Main Menu Settings			
	Initial Screen Setting			
Device Information				P.349
Meter Count	Check Details	Copy		P.350
		Print		
		Scan/Fax		
		Other		
		Print List		
		Coverage Rate *2		
Remaining Copy Count *1				—

*1: Displayed after a user or account authentication if maximum limit is set for the number of copies the user or account can make.

*2: Coverage rate can be used as a rough toner consumption estimate and may not completely reflect the actual amount of toner used.

10.2 Starting/Exiting

10.2.1 Starting procedure

1. Press the Utility/Counter key.
2. The Utility Mode screen will appear.

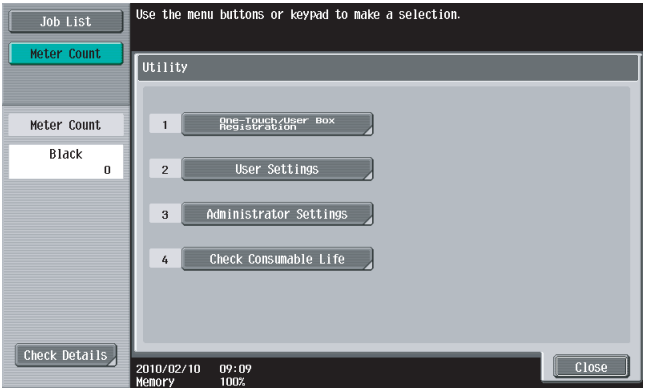

A1UDF3E029DA

10.2.2 Exiting procedure

- Touch the [Close] key.

10.3 Touch Panel Adjustment

A. Use

- To adjust the position of the touch panel display
- Make this adjustment if the touch panel is slow to respond to a pressing action.
- Use during the setup procedure.

B. Procedure

1. Press the Accessibility key.
2. Touch [Touch Panel Adj.].
3. Using the tip of a pen or similar object, touch the four keys (+) on the screen in sequence.

- These crosses may be touched in any order; but be sure to touch the center of each cross.
- Use care not to damage the screen surface with the tip of the pen.

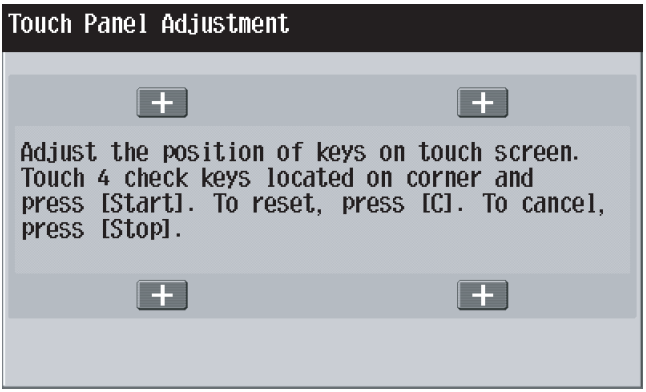

A0P0F3E544DA

4. Touching all four crosses will turn the Start key ON in blue.
5. Press the Start key.

10.4 One-Touch User Box Registration

- In a copier where the user authentication function that uses an external server or MFP is set to ON, when you operate the copier without performing user authentication, this menu is not displayed.
- It will not be displayed when the authentication device is set to “Set” by the following setting.
  [Service Mode] → [Billing Setting] → [Management Function Choice]

10.4.1 Create One-Touch destination-Address Book (Public)/(Personal)

A. E-mail

(1) Use

- To register/change e-mail address to send scanned data.

(2) Procedure

- A new address can be registered by touching [New].
- Select any displayed address to check, edit or delete the setting.

B. User Box

- It will not be displayed when the following setting shows that authentication device or the vendor is mounted.
  [Service Mode] → [Billing Setting] → [Management Function Choice]
  (It will be displayed when the key counter is mounted.)
- It will be displayed only when the hard disk is installed.

(1) Use

- To register/change the Box address when storing the scanned data in the box in the hard disk in the main body.

(2) Procedure

- A new address can be registered by touching [New].
- Select any displayed address to check, edit or delete the setting.
- At least one User Box must be registered for registering a Box address.

C. Fax

(1) Use

- To register/change the fax destinations.

(2) Procedure

- A new address can be registered by touching [New].
- Select any displayed address to check, edit or delete the setting.

D. PC (SMB)

(1) Use

- To register/change SMB address to send scanned data.

(2) Procedure

- A new address can be registered by touching [New].
- Select any displayed address to check, edit or delete the setting.

E. FTP

(1) Use

- To register/change FTP address to send scanned data.

(2) Procedure

- A new address can be registered by touching [New].
- Select any displayed address to check, edit or delete the setting.

F. WebDAV

(1) Use

- To register/change WebDAV address to send scanned data.

(2) Procedure

- A new address can be registered by touching [New].
- Select any displayed address to check, edit or delete the setting.

G. IP Address Fax

- Setting will be available only when [IP Address FAX] is set to “ON” in the following settings.
  [Administrator Settings] → [Network Settings] → [Network Fax Settings] → [Network Fax Function Settings]

(1) Use

- To register/change the IP address fax destination when transmitting the IP address fax data.

(2) Procedure

- A new address can be registered by touching [New].
- Select any displayed address to check, change or delete the setting.

H. Internet Fax

- Setting will be available only when [Internet FAX] is set to “ON” in the following settings.
  [Administrator Settings] → [Network Settings] → [Network Fax Settings] → [Network Fax Function Settings]

(1) Use

- To register/change the Internet fax address when transmitting the internet fax data.

(2) Procedure

- A new address can be registered by touching [New].
- Select any displayed address to check, change or delete the setting.

10.4.2 Create One-Touch destination-Group

A. Use

- To register/change a group to send scanned data/fax data simultaneously.

B. Procedure

- A new address can be registered by touching [New].
- Select any displayed group to check, edit or delete them.
- At least one address must be registered for registering a new group.

10.4.3 Create One-Touch destination-E-mail Settings

- It will not be displayed when the following setting shows that the management device 2 is mounted.
  [Service Mode] → [Billing Setting] → [Management Function Choice]

A. E-mail Subject

(1) Use

- To register the e-mail subject when transmitting the scanned data.

(2) Procedure

- A new address can be registered by touching [New].
- Select any displayed address to detail check, edit or delete the setting.
- The subject can be set as default by selecting the subject displayed on the screen and pressing [Set as Default].

B. E-mail Body

(1) Use

- To register the e-mail message when transmitting the scanned data.

(2) Procedure

- A new address can be registered by touching [New].
- Select any displayed address to detail check or delete the setting.
- The text can be set as default by selecting the text displayed on the screen and pressing [Set as Default].

10.4.4 Create User Box

- It will not be displayed when the authentication device is set to “Set” by the following setting.
  [Service Mode] → [Billing Setting] → [Management Function Choice]
- It will not be displayed when the following setting shows that the vendor is mounted.
  [Service Mode] → [Billing Setting] → [Management Function Choice]
  (It will be displayed when the key counter is mounted.)
- This menu is not available due to functional restriction during user authentication when [User Box] is set to Restrict.
- It will not be displayed when [Allow/Restrict User Box] is set to “Restrict” in the following settings.
  [Administrator Settings] → [System Settings] → [User Box Settings]
- It will not be displayed when both the hard disk and optional fax kit FK-508 are not installed.

10.4.5 Create User Box-Public/Personal User Box

- It will be displayed only when the hard disk is installed.

A. Use

- To register/change the box for storing text data in the hard disk of the machine.
- Shared or personal box can be registered according to its intended use.

B. Procedure

- A new box can be registered by touching [New].
- Select any displayed box to change or delete it.

10.4.6 Create User Box-Confidential RX User Box

- It will be displayed only when the hard disk is not installed.

A. Use

- To register/change the box for confidential RX document.
- If a hard disk is installed, Confidential RX can be enabled when the Confidential RX function is added to the Public/Personal/Group User Box.

B. Procedure

- A new box can be registered by touching [New].
- Select any displayed box to change or delete it.

10.4.7 Create User Box-Bulletin Board User Box

- It will not be displayed when the authentication device 1 is set to “Set” by the following setting.
  [Service Mode] → [Billing Setting] → [Management Function Choice]
- It will not be displayed when the following setting shows that the vendor is mounted.
  [Service Mode] → [Billing Setting] → [Management Function Choice]
  (It will be displayed when the key counter is mounted.)
- It will not be displayed due to functional restriction upon user authentication when [User Box] is set to “OFF.”
- It will be displayed only when the optional fax kit (FK-508) is mounted.
- It will not be displayed during user authentication if the fax operation is set to “Restrict” by the function restriction.

A. Use

- To register/change the bulletin board user box.

B. Procedure

- A new box can be registered by touching [New].
- Select any displayed box to change or delete it.

10.4.8 Create User Box-Relay User Box

- It will not be displayed when the authentication device 1 is set to “Set” by the following setting.
  [Service Mode] → [Billing Setting] → [Management Function Choice]
- It will not be displayed when the following setting shows that the vendor is mounted.
  [Service Mode] → [Billing Setting] → [Management Function Choice]
  (It will be displayed when the key counter is mounted.)
- It will not be displayed due to functional restriction upon user authentication when [User Box] is set to “OFF.”
- It will be displayed only when the optional FAX kit (FK-508) is mounted.
- It will be displayed when the following setting is set to “ON.”
  [Service Mode] → [FAX] → [System] → [Display Setting] → [Relay]

A. Use

- To register/change the Relay User Box.

B. Procedure

- A new box can be registered by touching [New].
- Select any displayed box to change or delete it.

10.4.9 Limiting Access to Destinations

- It will not be displayed when the following setting is set to “ON.”
  [Administrator Settings] → [Security Settings] → [Enhanced Security Mode]

A. Outline

- The Limiting Access to Destinations setting allows or restricts individual user's access to each destination. This enables security control by restricting information that can be accessed.

(1) Apply Levels

- One of the six levels from 0 to 5 can be assigned to all destinations. Similarly, one of the levels from 0 to 5 can be assigned to all users. Depending on the combination of the destination and user levels, destinations that a user can access can be limited.
  For example, users of level 2 can access the destinations that belong to the levels 0 to 2, but cannot access to the destinations that belong to the levels 3 to 5. Level 5 users can access all destinations of the levels 0 to 5.

(2) Groups

- A group can be made with a certain name to allow its members to access its destinations. Users and destinations can be registered for the group so that the registered destinations can be accessed by the registered users.
  Access restriction depending on an individual level is also applied to the group with access to the destinations determined by the combination of the user and destination levels within a group.
- A destination can be included in only one group.
- A user can be included in multiple different groups.

10.4.10 Limiting Access to Destinations-Apply Levels/Groups to Destinations

A. Address Book

(1) Use

- Sets a level and a group for destinations registered in the address book.

(2) Procedure

- Select a destination, press [Apply Level] or [Apply Group] and make a setting.

B. Group

(1) Use

- Sets a level and a group for destinations registered in the group.

(2) Procedure

- Select a destination, press [Apply Level] or [Apply Group] and make a setting.

C. Program

(1) Use

- Sets a level and a group for destinations registered in the program.

(2) Procedure

- Select a destination, press [Apply Level] or [Apply Group] and make a setting.

10.5 User Settings

10.5.1 System Settings-Language Selection

A. Use

- To select the language on the LCD display.
- To change the language used on the control panel.

B. Procedure

- The language options depend on the marketing area selected in [Marketing Area] available from [System 1] under Service Mode.
  See P.417

10.5.2 System Settings-Measurement Unit Settings

A. Use

- To select the unit displayed on the LCD display.

B. Procedure

- The default setting varies depending on the marketing area.

mm (Numerical Value) inch (Numerical Value) inch (Fraction)

10.5.3 System Settings-Paper Tray Settings

A. Auto Tray Selection Settings

(1) Use

- To set the tray for automatic selection when APS is being set.
- To establish the priority for switching the tray when ATS is being set.

(2) Procedure

- Select the tray on the [Auto Tray Select] screen.
- Set the priority on the [Tray Priority] screen.

B. Auto Tray Switch ON/OFF

(1) Use

- To set whether to automatically switch to another tray with same size paper when the paper feed tray runs out of paper during printing.

(2) Procedure

- The default setting is Restrict.

Allow “Restrict”

C. No Matching Paper in Tray Setting

(1) Use

- To set whether to switch to another tray automatically when the specified tray runs out of paper during printing.
  Stop Printing (Tray Fixed) : It stops printing when the specified tray runs out of paper.
  Switch Trays (Tray Priority): To switch to another tray with the specified paper and print when the tray is out of paper

(2) Procedure

- The default setting is Stop Printing (Tray Fixed).

“Stop Printing (Tray Fixed)” Switch Trays (Tray Priority)

D. Print Lists

- It will not be displayed when the following setting shows that authentication device or the vendor is mounted.
  [Service Mode] → [Billing Setting] → [Management Function Choice]
  (It will be displayed when the key counter is mounted.)
- It will not be displayed when the authentication device 1 is set to “Set” by the following setting.
  [Service Mode] → [Billing Setting] → [Management Function Choice]

(1) Use

- To set the paper feed tray for output the list for the meter count or the unit check.
- It sets the simplex/duplex printing of the output for the sales counter or the unit check list.

(2) Procedure

<Paper tray>

- The default setting is Tray 1.

<Simplex/Duplex>

- The default setting is 1-Sided.

10.5.4 System Settings-Auto Color Level Adjust.

A. Use

- To set the criterion level to discriminate between a colored original and a black-and-white original.

B. Procedure

- Five levels are available to choose from and the default setting is 3.

Black		Standard	Full Color	
1	2	“3”	4	5

10.5.5 System Settings-Power Save Settings

- It will be displayed only when the following setting is set to “Level 1” or “Level 2.”
  [Administrator Settings] → [Security Setting] → [Administrator Security Level]
- It will not be displayed when the following setting shows that authentication device 1 or the vendor is mounted.
  [Service Mode] → [Billing Setting] → [Management Function Choice]

A. Low Power Mode Settings

(1) Use

- To set the time until low power starts operating after the last key operation has been completed.
- Low power: To turn LED and LCD OFF, and lower the power consumption.

(2) Procedure

- Use the 10-key pad for setting.
- The default setting is 15 min.

“15 min.” (2 to 240)

B. Sleep Mode Settings

(1) Use

- To set the time until sleep mode starts operating after the last key operation has been completed.
- Turn all lines OFF except 5 V line for control.
- “OFF” will only be displayed when [Sleep ON/OFF Choice Setting] in Service Mode is set.

(2) Procedure

- Use the 10-key pad for setting.
- The default setting is 20 min.

“20 min.” (2 to 240) / OFF

10.5.6 System Settings-Output Settings

- It will be displayed only when the following setting is set to “Level 2.”
  [Administrator Settings] → [Security Settings] → [Administrator Security Levels]
- It will not be displayed when the following setting shows that authentication device or the vendor is mounted.
  [Service Mode] → [Billing Setting] → [Management Function Choice]
  (It will be displayed when the key counter is mounted.)

A. Print/Fax Output Settings

(1) Use

- To set the timing for printing for the PC print job or fax received.
  Batch Print : Starts printing when all data are received
  Page Print : Starts printing every time data for each page are received

(2) Procedure

<Printer>

- The default setting is Page Print.

<Fax>

- The default setting is Batch Print.

NOTE

- **[FAX] will be displayed only when the optional fax kit (FK-508) is mounted.**

B. Output Tray Setting

- It will be displayed when the optional finisher FS-527 or the job separator JS-505 is mounted.

(1) Use

- To set the priority output tray for each application (Copy print, Printer, Fax and Print Reports).

(2) Procedure

- The default settings are as follows.
  Copy : Tray 1
  Print : Tray 1
  Report Output : Tray 2
  Fax : Tray 2

- [Tray 3] will be displayed only when the job separator JS-603 is mounted to the finisher FS-527.

10.5.7 System Settings-AE Level Adjustment

- It will be displayed only when the following setting is set to “Level 2.”
  [Administrator Settings] → [Security Settings] → [Administrator Security Levels]
- It will not be displayed when the following setting shows that authentication device or the vendor is mounted.
  [Service Mode] → [Billing Setting] → [Management Function Choice]
  (It will be displayed when the key counter is mounted.)

A. Use

- To set the default setting for AE (Auto Exposure).
  The larger the value becomes the more emphasized the background will be.
  To make the background level foggier : Increase the setting value
  To make the background level less foggy : Decrease the setting value

B. Procedure

- The default setting is 2.

“2” (0 to 4)

10.5.8 System Settings-Auto Paper Select for Small Original

A. Use

- To make the copy setting when the paper is undetectably small, or no original is being set.
- To copy the original such as business cards with which the original detection is not effective.
  Copy on Small Size : Copies on A5 paper.
  Copy on A4/Letter : Copies on A4 or Letter (8 $^1/_2$ x 11) size paper.
  Prohibit Copy : Does not copy since the original size cannot be detected. paper feed tray needs to be selected prior to pressing the Start key.

B. Procedure

- The default setting is Prohibit Copy.

Copy on Small Size Copy on A4/Letter “Prohibit Copy”

10.5.9 System Settings-Blank Page Print Settings

- It will be displayed only when the following setting is set to “Level 2.”
  [Administrator Settings] → [Security Settings] → [Administrator Security Levels]
- It will not be displayed when the following setting shows that vendor is mounted.
  [Service Mode] → [Billing Setting] → [Management Function Choice]

A. Use

- Select wether or not to print the stamp/composition on blank pages.

B. Procedure

- The default setting is Do Not Print.

Print “Do Not Print”

10.5.10 System Settings-Page Number Print Position

- It will be displayed only when the following setting is set to “Level 2.”
  [Administrator Settings] → [Security Settings] → [Administrator Security Levels]

A. Use

- Specify a page number print position when printing page numbers after configuring 2-sided print or booklet settings. Select whether to print the page numbers on a same position on all pages or on positions symmetric with respect to the stapling position.

B. Procedure

- The default setting is Left & Right Bind: All the Same/Top & Bottom Bind: All the Same.
  “Left & Right Bind: All the Same/Top & Bottom Bind: All the Same”
  Left & Right Bind: Symmetrical/Top & Bottom Bind: All the Same
  Left & Right Bind: Symmetrical/Top & Bottom Bind: Symmetrical

10.5.11 System Settings-Select Keyboard

A. Use

- Select the keyboard type displayed by default in the touch panel.
- The type of keyboard to be displayed when [Local Keyboard] is selected depends on the language selected in [User Settings] → [System Settings] → [Language Selection].
- The type of keyboard corresponding to each language is shown below.

Language	Keyboard
Japanese	Standard keyboard (JIS) + Local keyboard (Japanese)
English (US) *1	Standard keyboard (US ASCII) only
English (UK) *1	Standard keyboard (US ASCII) + Local keyboard (UK)
French	Standard keyboard (US ASCII) + Local keyboard (French)
Italian	Standard keyboard (US ASCII) + Local keyboard (Italian)
German	Standard keyboard (US ASCII) + Local keyboard (German)
Spanish	Standard keyboard (US ASCII) + Local keyboard Spanish)
Simplified Chinese	Standard keyboard (JIS) + Local keyboard (Simplified Chinese)
Traditional Chinese	Standard keyboard (JIS) + Local keyboard (Traditional Chinese)
Korean	Standard keyboard (JIS) + Local keyboard (Korean)

*1 : If [Marketing Area] is set to Europe and [Language Selection] is set to English, English (UK) takes effect. If another marketing area and English are selected, English (US) takes effect.

B. Procedure

- The language options depend on the marketing area selected in [Marketing Area] available from [System 1] under Service Mode.
  See P.417

Standard Keyboard Local keyboard

10.5.12 Custom Display Settings-Copier Settings

A. Default Tab

(1) Use

- Selects a default tab display in the copy mode.

  Basic : Normal basic screen

  Quick Copy : This screen displays all options that can be selected for Paper, Zoom, and Duplex/Combine functions.
  For color functions, all selectable options can be displayed on the screen.
  The normal [Basic] screen is also displayed as another tab on the screen.

(2) Procedure

- The default setting is Basic.

"Basic" Quick Copy

B. Shortcut Key 1/2

(1) Use

- Selects whether to use the shortcut key.
- Adds frequently used shortcut keys of auxiliary functions to the basic screen.

(2) Procedure

- The default setting is OFF.

ON "OFF"

- When this setting is set to ON, select auxiliary functions to get their shortcut keys displayed on the screen.

C. Quick Settings 1, 2, 3, 4

(1) Use

- Allows you to register setting conditions for frequently used copy functions and place them on the basic settings screen.
- The registered setting condition can be invoked by only pressing the corresponding easy setting key.

(2) Procedure

- The default setting is OFF.

ON "OFF"

- When this setting is set to ON, select the copy functions you wish to register.

D. Default Tab Density Settings

(1) Use

- Specify whether to display the copy density setting in the basic settings screen. If [ON] is selected, you can press [Dark] or [Light] in the basic settings screen to adjust the copy density.

(2) Procedure

- The default setting is OFF.

ON "OFF"

- If [ON] is selected, [Quick Settings 3] and [Quick Settings 4] cannot be specified.

10.5.13 Custom Display Settings-Scan/Fax Settings

- It will not be displayed when the following setting shows that authentication device 1 is mounted.
  [Service Mode] → [Billing Setting] → [Management Function Choice]

A. Default Tab

(1) Use

- To set the basic screen display in scan/fax mode.

(2) Procedure

- The default setting is Address Book.

Address Search (LDAP) Job History “Address Book” Direct Input

B. Program Default

(1) Use

- To set the default display for the program screen during scan/fax mode.
- To keep the default display on the program screen which frequently changes during scan/fax mode

(2) Procedure

- The default setting is PAGE 1.

Temporary One-Touch/ “PAGE1” to PAGE27

C. Address Book Index Default

(1) Use

- To set the default display for the address book screen during scan/fax mode.
- To keep the default display instead of search string on the address book which frequently changes during scan/fax mode.

(2) Procedure

- The default setting is Favorite.

“Favorite” /ABC to WXYZ / etc

D. Shortcut Key 1/2

(1) Use

- Selects whether to use the shortcut key.
- Adds frequently used shortcut keys of auxiliary functions to the basic screen.

(2) Procedure

- The default setting is OFF.

ON “OFF”

- When this setting is set to ON, select auxiliary functions to get their shortcut keys displayed on the screen.

E. Default Address Book

(1) Use

- Sets a default screen display for the scan/fax mode where the address book is set to be displayed.

(2) Procedure

- The default setting is Index.

"Index"	Address Type

F. Default Address Type

(1) Use

- When the Default Address Book setting is set to "Address Type", select an address type that is displayed as the default in the "Address Book" tab.

(2) Procedure

- The default setting is Group.

Fax/E-Mail/Box/I-Fax/IP Ad. Fax/PC(SMB)/FTP/WebDAV/"Group"

10.5.14 Custom Display Settings-User Box Settings

A. Default Tab

(1) Use

- Selects a default tab display in the user box mode.

(2) Procedure

- The default setting is Public.

"Public"	Personal	System	Group

B. Shortcut Key 1/2

(1) Use

- Selects whether to use the shortcut key.
- Adds the shortcut keys of frequently used user box functions to the basic screen.

(2) Procedure

- The default setting is OFF.

ON	"OFF"

- When this setting is set to ON, select auxiliary functions to get their shortcut keys displayed on the screen.

10.5.15 Custom Display Settings-Copy Screen

- It will not be displayed when the following setting shows that key counter, vendor, or authentication device 1 is mounted.
  [Service Mode] → [Billing Setting] → [Management Function Choice]
  However, this menu is available when the key counter is installed and [The next job reservation] is set to License.
  [Service Mode] → [Billing Setting] → [Management Function Choice]

A. Copy Operating Screen

(1) Use

- To set the display on the control panel screen during printing.
  Yes : The screen shows that the printing is being carried out. The job can be reserved with [Program Next Job].
  No : The screen does not indicate the printing being carried out. The normal copy setting screen will be displayed. The copy reservation is available.

(2)

- The default setting is No.

Yes “No”

10.5.16 Custom Display Settings-Fax Active Screen

- It will be displayed only when the optional fax kit (FK-508) is mounted.
- It will not be displayed when the following setting shows that key counter, vendor, or authentication device 1 is mounted.
  [Service Mode] → [Billing Setting] → [Management Function Choice]

A. TX Display

(1) Use

- To set the screen display for the control panel when transmitting fax.

(2) Procedure

- The default setting is No.

Yes “No”

B. RX Display

(1) Use

- To set the screen display on the control panel when receiving fax.

(2) Procedure

- The default setting is No.

Yes “No”

10.5.17 Custom Display Settings-Color Selection Settings

A. Use

- Specifies a color that highlights a selection on the control panel.

B. Procedure

- The default setting is Green.

“Green” Blue Yellow Pumpkin

10.5.18 Custom Display Settings-Left Panel Display Default

A. Use

- Specifies an item that is shown as a default on the left panel display.

Job List (List Display)	: Displays a list of jobs that are both being printed and waiting to be printed.
Job List (Status Display)	: Displays the status of jobs that are being processed.
Check Job Settings	: Displays the setting of the copy job that is being printed.

B. Procedure

- The default setting is Job List.

"Job List"	Check Job Settings

10.5.19 Custom Display Settings-Search Option Settings

A. Uppercase and Lowercase Letters

(1) Use

- Select whether or not to differentiate between upper case and lowercase letters.

(2) Procedure

- The default setting is Differentiate.

"Differentiate"	Do Not Differentiate

B. Search Option Screen

(1) Use

- Select whether or not to display [Uppercase and Lowercase Letters] setting in the advanced search.
- Displaying the search option screen allows changing the search criteria for an individual search.

(2) Procedure

- The default setting is Off.

On	"Off"

10.5.20 Copier Settings-Auto Booklet ON when Fold & Staple

- It will be displayed only when the optional finisher is mounted.

A. Use

- To set whether to set the auto booklet when fold & staple is selected.

B. Procedure

- The default setting is Auto Select Booklet.

"Auto Select Booklet"	OFF

10.5.21 Copier Settings-Auto Zoom for Combine/Booklet

A. Use

- To set whether to select the appropriate magnification when combine or booklet is selected during auto paper select.

B. Procedure

- The default setting is Auto Display Zoom Ratio.

"Auto Display Zoom Ratio"	OFF

10.5.22 Copier Settings-Auto Sort/Group Selection

A. Use

- Selects whether to use the auto sort/group selection function when a job has output of two or more sheets.

  Yes : Automatically disables the Auto sort/group selection when a sheet of original is placed on the ADF and the start key is pressed. Automatically enables the Auto sort/group selection when two or more sheets of originals are placed on the ADF and the start key is pressed.

  No : Disable the Auto sort/group selection.

B. Procedure

- The default setting is Yes.

"Yes" No

10.5.23 Copier Settings-Default Copy Settings

- This menu is unavailable if user authentication is not made while either of authentication devices is set to Set in the [Service Mode] → [Billing Setting] → [Management Function Choice].
- This menu is not available when the key counter is set or when a warning appears to inform that the vendor's main power switch needs to be checked or coins (a card) are not inserted under the condition where the vendor is set to Set in the [Service Mode] → [Billing Setting] → [Management Function Choice].

A. Use

- To make default settings for the copy mode.

* The machine is initialized at the following timings:
- The main power switch is turned ON.
- Panel is reset.
- In an Interrupt mode.
- Auto Reset
- The password entry screen for account track is changed.

B. Procedure

<Current Setting>

- The settings made on the control panel before entering the setting menu screens are registered as the default settings of copy functions.

<Factory Default>

- The settings made at the time of shipment from the factory are registered as the default settings of copy functions.

10.5.24 Copier Settings-Default Enlarge Display Settings

- Displayed only when you select [Utility/Counter] → [User Settings] → [Copier Settings] in the enlarge display mode.

A. Use

- To make default settings for the enlarge display mode.

* The machine is initialized at the following timings:
- The main power switch is turned ON.
- Panel is reset.
- In an Interrupt mode.
- Auto Reset
- The password entry screen for account track is changed.

B. Procedure

<Current Setting>

- The settings made on the control panel before entering the setting menu screens are registered as the default settings of copy functions.

<Factory Default>

- The settings made at the time of shipment from the factory are registered as the default settings of copy functions.

10.5.25 Copier Settings-When AMS Direction is Incorrect

A. Use

- To set whether to print when the original is set in different direction from the set paper during auto zoom select.
  Print : To print according to the selected direction and size of paper
  Delete Job : To display alarm and cancel the job

B. Procedure

- The default setting is Print.

"Print" Delete Job

10.5.26 Copier Settings-Separate Scan Output Method

A. Use

- To set the output mode at Separate Scan setting.
  Page Print : Print consecutively during the read operation.
  Batch print : Print all at once after reading all data.
  Copy setting can be changed after the read operation.

B. Procedure

- The default setting is Page Print.

"Page Print" Batch Print

10.5.27 Copier Settings-Enlargement Rotation

A. Use

- Sets whether to rotate images of which length is more than 297 mm in the main scan direction (in the horizontal direction on the ADF or the Original glass) in the copying process.
  Allow : Makes an enlargement rotation.
  Restrict : Disables an enlargement rotation.

B. Procedure

- The default setting is Restrict.

Allow	“Restrict”

10.5.28 Copier Settings-Auto Zoom (Platen)

- It will be displayed only when the following setting is set to “Level 1” or “Level 2.”
  [Administrator Settings] → [Security Settings] → [Administrator Security Levels]

A. Use

- To set whether to function the auto magnification when the feed tray is selected with document set on the original glass (excepting at automatic paper selection mode.)

B. Procedure

- The default setting is OFF.

ON	“OFF”

10.5.29 Copier Settings-Auto Zoom (ADF)

- It will be displayed only when the following setting is set to “Level 1” or “Level 2”.
  [Administrator Settings] → [Security Settings] → [Administrator Security Levels]

A. Use

- To set whether to function the auto magnification when the feed tray is selected with document set on the ADF (excepting at automatic paper selection mode.)

B. Procedure

- The default setting is ON.

“ON”	OFF

10.5.30 Copier Settings-Specify Default Tray when APS Off

- It will be displayed only when the following setting is set to “Level 1” or “Level 2.”
  [Administrator Settings] → [Security Settings] → [Administrator Security Levels]

A. Use

- To set the tray to be used when APS is cancelled.

B. Procedure

- The default setting is Tray (Tray 1) Before APS OFF.

“Tray Before APS OFF”	Default Tray

10.5.31 Copier Settings-Select Tray for Insert Sheet

- It will be displayed only when the following setting is set to “Level 1” or “Level 2.”
  [Administrator Settings] → [Security Settings] → [Administrator Security Levels]

A. Use

- To select the default setting of the tray for cover sheet paper.

B. Procedure

- The default setting is Tray 2.

10.5.32 Copier Settings-Half-Fold Specification

- It will be displayed only when the optional saddle stitcher SD-509 is installed in the finisher FS-527.

A. Use

- Specify whether to apply Half-Fold together for all pages or for each page when handling a job containing multiple pages.
  When Booklet is selected simultaneously with Half-Fold, all pages are half-folded together even if [One Sheet at a Time] is selected.
  If the number of original pages exceeds the folding capacity of this machine, the “Fold” function setting is cancelled automatically, and the sheets are printed without being folded.

B. Procedure

- The default setting is Multiple Sheets.

One Sheet at a Time	“Multiple Sheets”

10.5.33 Copier Settings-Print Jobs During Copy Operation

- It will be displayed only when the following setting is set to “Level 2.”
  [Administrator Settings] → [Security Settings] → [Administrator Security Levels]

A. Use

- To set whether to accept the printing job for print data or fax data during copy operation.
  Accept : Receives the print data or fax data to print.
  Receive Only : Print data or fax data will be printed when the copy operation is finished.

B. Procedure

- The default setting is Accept.

“Accept”	Receive Only

10.5.34 Copier Settings-Automatic Image Rotation

- [It will be displayed only when the following setting is set to “Level 1” or “Level 2.”
  [Administrator Settings] → [Security Settings] → [Administrator Security Levels]

A. Use

- Sets whether to automatically rotate images to print if the original and specified paper directions are not consistent with each other.

B. Procedure

- The default setting is ON.

“ON”	OFF

10.5.35 Copier Settings-Finishing Program

A. Use

- Configure whether to display the Finishing Program button in the basic settings screen. To display the button, register the contents of the finishing program.
  Register frequently used finishing functions so that you can set them at once by using the button that appears in the basic settings screen.

B. Procedure

- The default setting is ON.

"ON"	OFF

- When selecting "ON," select the contents to be registered in the finishing program.

10.5.36 Copier Settings-Card Shot Settings

- It will be displayed only when the following setting is set to "Level 2."
  [Administrator Settings] → [Security Settings] → [Administrator Security Levels]

A. Layout

(1) Use

- To set the initial copy layout setting in card shot mode.

(2) Procedure

- The default setting is Top/Bottom.

"Top/Bottom"	Left/Right (Top Half)	Left/Right

B. Zoom

(1) Use

- To set the initial zoom setting in card shot mode.

(2) Procedure

- The default setting is Full Size.

"Full Size"	x 1.0

C. Store Original Size

(1) Use

- To pre-register original sizes that are used in card shot mode.

(2) Procedure

- Enter an original size, name it, and register the data.

10.5.37 Scan/Fax Settings-JPEG Compression Level

A. Use

- To set the JPEG compression method when scanning with JPEG while in scan/fax mode.

High Quality	: Lowers the compression rate and puts priority in quality while scanning.
Standard	: Compression rate and quality are normally balanced while scanning.
High Compression	: Makes the compression rate higher and puts priority in lowering the data volume while scanning.

B. Procedure

- The default setting is Standard.

High Quality "Standard" High Compression

10.5.38 Scan/Fax Settings-Black Compression Level

A. Use

- To set the black compression method for scanning in the black mode while in scan/fax mode.

B. Procedure

- The default setting is MMR.

MH "MMR"

10.5.39 Scan/Fax Settings-TWAIN Lock Time

A. Use

- To set the period of time for unlocking the operation panel while in TWAIN scanning.

B. Procedure

- The default setting is 120 sec.

"120 sec." (30 to 300 sec.)

10.5.40 Scan/Fax Settings-Default Scan/Fax Settings

- This menu is unavailable if user authentication is not made while either of authentication devices is set to set in the [Service Mode] → [Billing Setting] → [Management Function Choice].
- This menu is not available when the key counter is set or when a warning appears to inform that the vendor's main power switch needs to be checked or coins (a card) are not inserted under the condition where the vendor is set to Set in the [Service Mode] → [Billing Setting] → [Management Function Choice].

A. Use

- To make default settings for the fax/scan mode.

* The machine is initialized at the following timings:
- The main power switch is turned ON.
- Panel is reset.
- In an Interrupt mode.
- Auto Reset
- The password entry screen for account track is changed.

B. Procedure

<Current Setting>

- The settings made on the control panel before entering the setting menu screens are registered as the default settings of fax/scan functions.

<Factory Default>

- The settings made at the time of shipment from the factory are registered as the default settings of fax/scan functions.

10.5.41 Scan/Fax Settings-Default Enlarge Display Settings

- Displayed only when you select [Utility/Counter] → [User Settings] → [Scan/Fax Settings] in the enlarge display mode.

A. Use

- To make default settings for the enlarge display mode.

* The machine is initialized at the following timings:

- The main power switch is turned ON.
- Panel is reset.
- In an Interrupt mode.
- Auto Reset
- The password entry screen for account track is changed.

B. Procedure

<Current Setting>

- The settings made on the control panel before entering the setting menu screens are registered as the default settings of fax/scan functions.

<Factory Default>

- The settings made at the time of shipment from the factory are registered as the default settings of fax/scan functions.

10.5.42 Scan/Fax Settings-Compact PDF/XPS Compression Level

A. Use

- Selects a compression method applied to scanned data that is produced with the use of Compact PDF/XPS in the scan/fax mode.

High Quality	: Lowers the compression rate and puts priority in quality while scanning.
Standard	: Compression rate and quality are normally balanced while scanning.
High Compression	: Makes the compression rate higher and puts priority in lowering the data volume while scanning.

B. Procedure

- The default setting is Standard.

High Quality “Standard” High Compression

10.5.43 Scan/Fax Settings-Color TIFF Type

A. Use

- Select the compression level used for saving TIFF format data in color.
  TIFF (TTN2) : Scan in TTN2.
  TIFF (modified TAG) : Scan in modified TAG.

B. Procedure

- The default setting is TIFF (TTN2).

"TIFF (TTN2)" TIFF (modified TAG)

10.5.44 Scan/Fax Settings-OCR Operation Setting

- It will be displayed only when the optional i-Option (LK-105) is activated.

A. Use

- To set the method of OCR operation where a searchable PDF file is created.

B. Procedure

- The default setting is Prioritize Quality.

"Prioritize Quality" Prioritize Speed

10.5.45 Scan/Fax Settings-Graphic Outlining

A. Use

- To set the precision of outline conversion where outline PDFs are created.
- To set the processing level where scanned document is divided into text areas and image areas and the text is converted to outlines.

B. Procedure

- The default setting is OFF.

"OFF" LOW MIDDLE HIGH

10.5.46 Printer Settings-Basic Settings

A. PDL Setting

(1) Use

- To set the PDL (Page Description Language) for PC printing.

(2) Procedure

- The default setting is Auto.

"Auto" PCL PS

B. Number of Copies

(1) Use

- To set the number to be copied when not specified by the printer driver during PC printing.
- To use when the number cannot be specified by the printer driver during printing from Windows DOS, etc.

(2) Procedure

- The default setting is 1.

"1" (1 to 9999)

C. Original Direction

(1) Use

- To set the default setting for the direction of the original during PC printing.

(2) Procedure

- The default setting is Portrait.

"Portrait"	Landscape

D. Spool Print Jobs in HDD before RIP

(1) Use

- To set whether to store the print data to HDD when receiving the next job during RIP process of the current job.

(2) Procedure

- The default setting is OFF

ON	"OFF"

E. A4/A3 ↔ LTR/LGR Auto Switch

(1) Use

- To set whether to switch between A4 and Letter (8 $^{1}/_{2}$ x 11) size paper, and A3 and Ledger (11 x 17) size paper in reading.

NOTE

- **When switching the size, the image will be printed in the same magnification.**
- **The image will not be reduced when there is image deficiency.**

(2) Procedure

- The default setting is OFF.

ON	"OFF"

F. Banner Sheet Setting

(1) Use

- To set whether or not to print on the banner (front cover) page.

(2) Procedure

- The default setting is OFF.

ON	"OFF"

G. Binding Direction Adjustment

(1) Use

- Specifies the alignment between the sides of paper (binding position adjustment) in duplex printing.
- To achieve faster printing performance, select Productivity Priority. To address misalignment problems between sides of copies in the horizontal and vertical directions, select Finishing Priority.

Finishing Priority	: Able to optimize sides aligning operation as the process is performed after the machine receives all of the print data.
Productivity Priority	: Able to accelerate print speed as sides alignment proceeds together with data reception and print operation.
Control Adjustments	: Comply with the command from the printer driver and does not take the side alignment step.

(2) Procedure

- The default setting is Finishing Priority.

"Finishing Priority"	Productivity Priority	Control Adjustments

H. Line Width Adjustment

(1) Use

- To correct line width of the output data during PC print.

(2) Procedure

- The default setting is Thin.

"Thin"	Normal	Thick

I. Gray Background Text Correction

(1) Use

- Letters or lines on a gray background may look thicker than those on a non-gray background.

ON	: Makes characters and lines on a grayscale background thicker and sharpens the outlines of characters and figures.
OFF	: Makes grayscale background text correction by selecting Thin, Normal, or Thick in [Line Width Adjustment]. If selecting "ON" makes lines too thick, select "OFF."

(2) Procedure

- The default setting is ON.

"ON"	OFF

10.5.47 Printer Settings-Paper Setting

A. Paper Tray

(1) Use

- To set the paper feed tray when not specified by the printer driver during PC printing.
- To use when paper feed tray cannot be specified by the printer driver when printing from Windows DOS, etc.

(2) Procedure

- The default setting is Auto.

B. Paper Size

(1) Use

- To set the paper size when not specified by the printer diver during printing.
- To use when the paper size cannot be specified by the printer driver during printing from Windows DOS, etc.

C. 2-Sided Print

(1) Use

- To set whether to carry out duplex print during PC printing when not specified by the printer driver.
- To use when 2-sided printing cannot be specified by the printer driver while printing by Windows DOS, etc.

(2) Procedure

- The default setting is OFF.

ON "OFF"

D. Binding Position

(1) Use

- To set the binding direction during duplex printing when not specified by the printer driver during PC printing.
- To use when binding direction cannot be specified by the printer driver during printing by Windows DOS, etc.

(2) Procedure

- The default setting is Left Bind.

Top Bind "Left Bind" Right Bind

E. Staple

- It will be displayed only when the optional finisher is mounted.

(1) Use

- To set whether to staple or not when not specified by the printer driver during PC printing.
- To use hen staple is not specified by the printer driver during printing by the Windows DOS, etc.

(2) Procedure

- The default setting is OFF.

1 Position 2 Position "OFF"

F. Punch

- It will be displayed only when the optional finisher and punch kit are mounted.

(1) Use

- To select whether to make punch-holes or not when not specified by the printer driver during PC printing.
- To use when the printer driver cannot specify punching during printing from Windows DOS, etc.

(2) Procedure

- The default setting is OFF.

2-Hole/3-Hole/4-Hole "OFF"

* The number of punch holes being set is available from [Service Mode] → [Finisher].

G. Banner Paper Tray

(1) Use

- To set the feed tray for printing on the banner (front cover) page.

(2) Procedure

- The default setting is Auto.

10.5.48 Printer Settings-PCL Settings

A. Font Settings

(1) Use

- To set the font when not specified by the printer driver during PC printing.
- To use when the printer driver cannot specify the font during printing from Windows DOS, etc.
- It can be selected from the Resident font or the download font.

(2) Procedure

- The default setting is Courier.

1. When selecting from the Internal font, touch [Internal], and select the one from the displayed font list.

B. Symbol Set

(1) Use

- To set the font symbol set when not specified by the printer driver during PC printing.
- To use when the font symbol set cannot be specified by the printer driver during printing from Windows DOS, etc.

(2) Procedure

- The default setting is Roman-8 or PC8, Code Page 437.

C. Font Size

(1) Use

- To set the font size when not specified by the printer driver during PC printing.
- To set the font size when it cannot be specified by the printer driver during printing from Windows DOS, etc.
- To set scalable font (: Point) and bitmap font (: Pitch) respectively.

(2) Procedure

- The default setting is
  Scalable Font : 12.00 points
  Bitmap Font : 10.00 pitch

D. Line/Page

(1) Use

- To set the number of lines per page for printing the text data.

(2) Procedure

- Default setting value differs depending on the values by the following two different settings.
  [Utility/Counter] → [User Setting] → [Printer Setting] → [Basic Setting] → [Original Direction]
  [Utility/Counter] → [User Setting] → [Printer Setting] → [Paper Setting] → [Default Paper Size]

"60 or 64 lines" (5 to 128)

E. CR/LF Mapping

(1) Use

- To set the mode for replacing data when printing the text data.
  Mode 1 : CR → CR-LF LF=LF FF=FF
  Mode 2 : CR=CR LF→CR-LF FF→CR-FF
  Mode 3 : CR→CR-LF LF→CR-LF FF→CR-FF
  OFF : Does not replace

(2) Procedure

- The default setting is OFF.

Mode 1 Mode 2 Mode 3 “OFF”

10.5.49 Printer Settings-PS Setting

A. Print PS Errors

(1) Use

- To set whether to print or not the error information when an error occurred during PS rasterizing.

(2) Procedure

- The default setting is OFF.

ON “OFF”

10.5.50 Printer Settings-XPS Settings

A. Verify XPS Digital Signature

(1) Use

- Selects whether to verify digital signatures attached to XPS (XML Paper Specification) files when printing the files.
- When digital signature verification is selected, files with invalid digital signatures are not printed.

(2) Procedure

- The default setting is OFF.

ON “OFF”

10.5.51 Printer Settings-Print Reports

- It will not be displayed when the following setting shows that authentication device 1 or vendor is mounted.
  [Service Mode] → [Billing Setting] → [Management Function Choice]
  (It will be displayed when the key counter is mounted.)

A. Use

- To output the report or demo page concerning the print setting.
- To check the setting concerning the printer.
  The types of report available for output are as follows.

Configuration Page	: The list of printer setting will be output.
Demo Page	: The test page will be output.
PCL Font List	: PCL font list will be output.
PS Font List	: PS font list will be output.

B. Procedure

1. Touch [User Setting] → [Printer Setting] → [Print Reports].
2. Select the report to be output.
3. Select the feed tray.
4. Select simplex or duplex print, and touch the Start key.

10.5.52 Printer Settings-TIFF Image Paper Setting

A. Use

- Select this option to configure how to determine the paper size when directly printing TIFF or JPEG image data.

Auto	: Select this option to calculate the size of the image based on its resolution and the number of pixels to print the image on paper that fits the image size. Select this option to print images on paper of the same size as the image.
Priority Paper Size	: Select this option to print on paper of the priority paper size specified on the machine. If the image size is larger than the paper size, it is automatically reduced.

NOTE

- **When "Auto" is selected and paper larger than the image size is not in the paper trays, paper size error occurs.**

B. Procedure

- The default setting is Auto.

"Auto" Priority Paper Size

10.5.53 Change Password

- When conducting user authentication (MFP only), it will be displayed only when the authentication is complete.
- This menu is available only when box administrator authentication is established during user authentication or account track.

A. Use

- To modify the password used for the user authentication.

B. Procedure

- Enter the user authentication password with the keys on the control panel.
  Current Password : Enter the user authentication password currently used.
  New Password : Enter the new user authentication password to be used.
  Retype Password : Enter the new user authentication password again.

NOTE

- **When [Password Rules] which can be displayed by the following setting is set to "ON", password using the single letter or the password same with the previous one, less than 8-digit will not be modified.**
  [Utility/Counter] → [Administrator Settings] → [Security Setting]
- **When the following setting is set to "ON", entering the incorrect password three times will cause access lock. When an access lock occurred, turn the main power switch OFF, and wait for 10 seconds or more and turn main power switch ON again to enter the password again.**
  [Administrator Settings] → [Security Setting] → [Enhanced Security Mode]

10.5.54 Change E-mail Address

- When conducting user authentication (MFP only), it will be displayed only when the authentication is complete.
- It will be displayed only when the following setting is set to "Level 2."
  [Administrator Settings] → [Security Settings] → [Administrator Security Levels]

A. Use

- To modify the e-mail address which is registered as a user.

B. Procedure

- Enter the new e-mail address using the keys on the control panel.

10.5.55 Change Icon

- When conducting user authentication, it will be displayed only when the authentication is complete.

A. Use

- Change the icon specified as registered user information.

B. Procedure

- Select the icon and press [OK].

10.5.56 Register Authentication Settings

- It will be displayed when user authentication (MFP) is completed and the following is met; [Biometric/IC Card Info. Registration] is set to “Allow” in [Utility/Counter] → [Administrator Settings] → [System Settings] → [Restrict User Access] → [Restrict Access to Job Settings].

A. Use

- To enable users to register or delete their own biometric/IC card information.

10.5.57 Registered Application Setting-Default Application Selection

- It will be displayed only when the intermediate authentication server is used for user authentication and user authentication is completed.
  However, it cannot be displayed depending on the setting of the application side.

A. Use

- For each user, set the application that is started just after the intermediate authentication.

B. Procedure

- As the applications registered in MFP appear, select an application you wish to set as the one to be started at the beginning, and touch [OK].

10.5.58 Cellular Phone/PDA Setting-Link File Error Notification

- It will be displayed only when the optional local interface kit EK-605 is mounted.

A. Use

- To set whether to print a job where a link error occurs when you are trying to print a web page and its links (page or file) from a cellular phone or PDA.

B. Procedure

- The default setting is Yes.

“Yes” No

10.5.59 Cellular Phone/PDA Setting-Proxy Server Use

- It will be displayed only when the optional local interface kit EK-605 is mounted.

A. Use

- To set whether to use a proxy server when communicating with a cellular phone or PDA.

B. Procedure

- The default setting is No.

Yes “No”

10.5.60 Cellular Phone/PDA Setting-Print Settings

- It will be displayed only when the optional local interface kit EK-605 is mounted.

A. Use

- To set different print settings used when printing from a cell phone or PDA.

B. Procedure

- The following items can be set.
  Basic : 1-sided/2-sided, Finishing
  Application : Page Margin, Stamp/Composition

10.6 Administrator Settings

- The Administrator Settings will be available by entering the administrator password (8 digits) set by the Administrator Settings or Service Mode.
  (The administrator password is initially set to “12345678.”)

NOTE

- **When the following setting is set to “ON”, entering the incorrect administrator password three times will cause access lock.**
  The access lock is released after the lapse of a predetermined period of time after the main power switch is turned OFF and then ON more than 10 seconds later.
  The access lock can be released by touching keys as follows.
  [Service Mode] → [Enhanced Security] → [Administrator unlocking]

10.6.1 System Settings-Power Save Settings

A. Low Power Mode Settings

(1) Use

- To set the time until low power starts operating after the last key operation has been completed.
  Low power: To turn LED and LCD OFF, and lower the power consumption.

(2) Procedure

- Use the 10-key pad for setting.
- The default setting is 15 min.

“15 min.” (2 to 240)

B. Sleep Mode Settings

(1) Use

- To set the time until sleep mode starts operating after the last key operation has been completed.
- Turn all lines OFF except 5 V line for control.
- “OFF” will only be displayed when [Sleep ON/OFF Choice Setting] in Service Mode is set.

NOTE

- **The sleep mode will begin in 48 hours even if it sets it to “OFF.”**

(2) Procedure

- Use the 10-key pad for setting.
- The default setting is 20 min.

“20 min.” (2 to 240) / OFF

C. Power Save Key

(1) Use

- To set the type of the power save mode which starts by pressing the Power Save key.

(2) Procedure

- The default setting is Low Power.

“Low Power” Sleep

D. Enter Power Save Mode

(1) Use

- To set whether to immediately switch to the power save mode after printing in case of receiving the fax/PC print during power save mode.

  Normal : Switches to the power save mode according to the normal power save mode after the printing.

  Immediately : Switches to the power save mode immediately after the printing.

(2) Procedure

- The default setting is Immediately.

Normal "Immediately"

10.6.2 System Settings-Output Settings

A. Print/Fax Output Settings

(1) Use

- To set the timing for printing for the PC print job or fax received.

  Batch Print : Starts printing when all data are received

  Page Print : Starts printing every time data for each page are received

(2) Procedure

<Printer>

- The default setting is Page Print.

<Fax>

- The default setting is Batch Print.

NOTE

- **[FAX] will be displayed only when the optional fax kit (FK-508) is mounted.**

B. Output Tray Settings

- It will be displayed when the optional finisher FS-527 or the job separator JS-505 is mounted.

(1) Use

- To set the priority output tray for each application (Copy print, Printer, Fax and Print Reports).

(2) Procedure

- The default settings are as follows.

  Copy : Tray 2

  Print : Tray 2

  Report Output : Tray 1

  Fax : Tray 1

- [Tray 3] will be displayed only when the job separator JS-603 is mounted to the finisher FS-527.

C. Shift Output Each Job

- It will be displayed when the optional finisher FS-527/529 or the job separator JS-505 is mounted.

(1) Use

- To set whether to offset each job when paper is printed using the finisher.
- Some paper type may fail to be discharged or get deteriorated loading when large volume copies are printed using the finisher.
  This function is used to print large volume copies when finisher is mounted.
  (When this function is set to “No”, the paper is discharged without offsetting the paper to the center of the tray.)

(2) Procedure

- The default setting is Yes.

“Yes” No

10.6.3 System Settings-Date/Time Settings

A. Use

- To set the date/time and the time zone to start the clock.
- This setting should be carried out for set up.

B. Procedure

- For time zone, set the time difference with the world standard time.
- Setting range for the time zone: -12:00 to +12:00 (by 30 minutes)
- When the following setting is set to “ON”, [Set Data] will be displayed. Touch [Set Data] and modify the time.
  [Administrator Settings] → [Network Settings] → [Detail Settings] → [Time Adjustment Setting]

10.6.4 System Settings-Daylight Saving Time

A. Use

- To set whether to set the daylight saving time.
- To set the time difference in setting the daylight saving time.

B. Procedure

- The default setting is No.

Yes “No”

- When setting to ON, set the time difference to move up.
  “60 min.” (1 to 150)

10.6.5 System Settings-Weekly Timer Settings

A. Weekly Timer ON/OFF Settings

(1) Use

- To set whether to use or not to use the weekly timer.

(2) Procedure

- The default setting is OFF.

ON	“OFF”

B. Time Settings

(1) Use

- To set the time to turn ON/OFF the weekly timer for each day of the week.

(2) Procedure

1. Touch the key of the day to be set.
2. Using the 10-key pad, input the ON time and the OFF time.
3. For cancelling the setting, press [Clear].

C. Date Settings

(1) Use

- To select the date or the day of the week for the weekly timer to function.

(2) Procedure

1. Select the Year/Month with [+] / [-] keys.
2. For setting by the date, touch the appropriate key of the day.
3. For setting by the day of the week, touch the appropriate key of the week by [Daily Setting].
4. Check to make sure that the set key of the day is highlighted, and touch [OK].

D. Select Time for Power Save

(1) Use

- To set the time to turn power OFF/ON when the weekly timer is set and the power is ON.

(2) Procedure

- The default setting is No.

Yes	“No”

<Set Time for Power Save>

- When “Yes” is selected, using the 10-key pad, input the time to turn OFF and to turn back ON again.

E. Password for Non-Business Hours

(1) Use

- To set whether to input the password before using when the weekly timer is set.

(2) Procedure

- The default setting is No.

Yes	“No”

- When setting to Yes, enter the password (eight digits).

10.6.6 System Settings-Restrict User Access

A. Copy Program Lock Settings

(1) Use

- To set the prohibition for modifying the registered copy program.

(2) Procedure

1. Touch the key for the appropriate copy program.
2. Touch [OK].

B. Delete Saved Copy Program

(1) Use

- To delete the registered program job.

(2) Procedure

1. Touch the appropriate program job.
2. Touch [Delete].
3. Touch [Yes] on the check screen to delete the program job.

C. Restrict Access to Job Settings

(1) Changing Job Priority

- It will not be displayed when the following setting shows that vendor 2 is mounted.
  [Service Mode] → [Billing Setting] → [Management Function Choice]

<Use>

- To set whether to allow or restrict the change on the print priority for the job.

<Procedure>

- The default setting is Allow.

“Allow”	Restrict

(2) Delete Other User Jobs

- It will not be displayed when the following setting shows that vendor 2 is mounted.
  [Service Mode] → [Billing Setting] → [Management Function Choice]

<Use>

- To set whether to allow or restrict job delete by other users when the user is authenticated.

<Procedure>

- The default setting is Restrict.

Allow	“Restrict”

(3) Registering and Changing Addresses

<Use>

- To set whether to allow or restrict the change of the registered address.

<Procedure>

- The default setting is Allow.

“Allow”	Restrict

NOTE

- **[Allow] cannot be selected when the following setting is set to “ON”.**
  [Administrator Settings] → [Security Setting] → [Enhanced Security Mode]

(4) Changing Zoom Ratio

- It will not be displayed when the following setting shows that vendor 2 is mounted. [Service Mode] → [Billing Setting] → [Management Function Choice]

<Use>

- To set whether to allow or restrict the change on the registered magnification.

<Procedure>

- The default setting is Allow.

"Allow"	Restrict

(5) Change the "From" Address

<Use>

- To set whether or not to prohibit the registered from address to be changed.

<Procedure>

- The default setting is Allow.

"Allow"	Restrict

(6) Change Registered Overlay

<Use>

- Selects allow or restrict for the change of registered overlay.

<Procedure>

- The default setting is Allow.

"Allow"	Restrict

(7) Biometric/IC Card Info. Registration

- It will be displayed only when both of the following are met: "Authentication Device 2" is selected in [Service Mode] → [Billing Setting] → [Management Function Choice]. [User Authentication] is set to "ON (MFP)" in [Administrator Settings] → [User Authentication/Account Track] → [General Settings].

<Use>

- Allow or restrict the registration or deletion of authentication information.

<Procedure>

- The default setting is Allow.

"Allow"	Restrict

D. Restrict Operation

(1) Restrict Broadcasting

<Use>

- To set whether or not to prohibit sending the fax to more than one address.

<Procedure>

- The default setting is OFF.

ON	"OFF"

10.6.7 System Settings-Expert Adjustment

- It will not be displayed when the following setting shows that vendor 2 is mounted.
  [Service Mode] → [Billing Setting] → [Management Function Choice]
  (It will be displayed when the Key Counter is mounted or when the following setting shows that switch No.33 is set to [01] at HEX assignment.
  [Service Mode] → [System 2] → [Software Switch Setting])

A. AE Level Adjustment

(1) Use

- To set the default setting for AE (Auto Exposure) the larger the value becomes the more emphasized the background will be.
  To make the background level foggier : Increase the setting value
  To make the background level less foggy : Decrease the setting value

(2) Procedure

- The default setting is 2.

"2" (0 to 4)

B. Printer Adjustment

(1) Leading Edge Adjustment

- It will not be displayed if the management device 1 is OFF or authentication is not made while [Management Device 1] is selected in [Service Mode] → [Billing Setting] → [Management Function Choice].
- This adjustment is unavailable if the key counter is not inserted although only the key counter is selected in [Service Mode] → [Billing Setting] → [Management Function Choice].

<Use>

- To vary the print start position in the sub scan direction for each of different paper types. (to adjust the timing starting from the roller connection up to start of transfer output)
- The adjustment is made for the paper feed from the manual bypass tray, but the changes made with this adjustment are applied to every paper feed tray.
- The PH unit has been replaced.
- The paper type has been changed.
- The print image deviates in the sub scan direction.
- A faint image occurs on the leading edge of the image.
- Able to make an individual adjustment for each paper type of plain paper, thick 1/1+, thick 2, transparencies, and envelopes.

<Procedure>

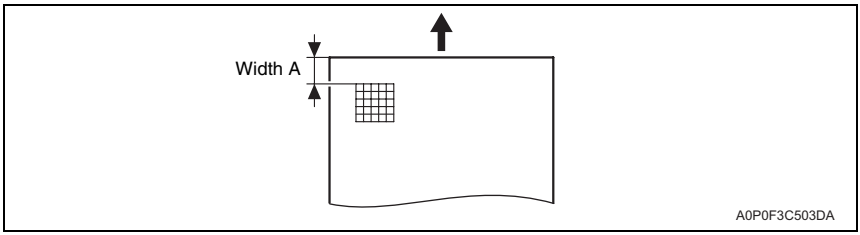

- Width A on the test pattern produced should fall within the following range.

Specifications: 4.2 ± 0.5 mm
Setting range: -3.0 mm to +3.0 mm (in 0.2 mm increments)

1. Place A3 paper on the manual bypass tray.
2. Call the Administrator Settings to the screen.
3. Touch [System Settings] → [Expert Adjustment] → [Printer Adjustment] → [Leading Edge Adjustment].
4. Select the [Normal].
5. Press the Start key to let the machine produce a test print.
6. Check the dimension of width A on the test print.
7. If width A falls outside the specified range, change the setting using the [+] / [-] key.
   If width A is longer than the specifications, make the setting value smaller than the current one.
   If width A is shorter than the specifications, make the setting value greater than the current one.
8. Press the Start key to let the machine produce a test print.
9. Check the dimension of width A on the test print.
10. If width A is outside the specified range, change the setting again and make a check again.
11. If width A falls within the specified range, touch [OK].
12. Following the same procedure, adjust for thick 1 to 3, OHP, and envelope.

(2) Centering

- It will not be displayed when the following setting shows that management device 1 is mounted during the device power is OFF or no authentication is set.
  [Service Mode] → [Billing Setting] → [Management Function Choice]
- This menu is unavailable when the key counter is not inserted while only the key counter is set to Set by [Service Mode] → [Billing Setting] → [Management Function Choice].

<Use>

- To vary the print start position in the main scan direction for each paper source.
- The PH unit has been replaced.
- A paper feed unit has been added.
- The print image deviates in the main scan direction.

<Procedure>

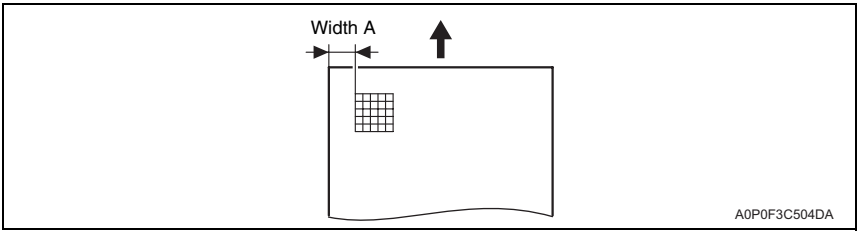

- Width A on the test print produced should fall within the following range.

Specifications: 3.0 ± 0.5 mm
Setting range: -3.0 mm to +3.0 mm (in 0.2 mm increments)

1. Call the Administrator Settings to the screen.
2. Touch [System Settings] → [Expert Adjustment] → [Printer Adjustment] → [Centering].
3. Select the paper source to be adjusted.
4. Press the Start key to let the machine produce a test print.
5. Check the dimension of width A on the test print.
6. If width A falls outside the specified range, change the setting using the [+] / [-] key.
   If width A is longer than the specifications, make the setting value smaller than the current one.
   If width A is shorter than the specifications, make the setting value greater than the current one.
7. Press the Start key to let the machine produce a test print.
8. Check the dimension of width A on the test print.
9. If width A is outside the specified range, change the setting again and make a check again.
10. If width A falls within the specified range, touch [OK].
11. Following the same procedure, adjust for all other paper sources.
    (Use A4 or 8 $^1/_2$ × 11 plain paper for the bypass.)

(3) Leading Edge Adjustment (Duplex Side 2)

- It will not be displayed when the following setting shows that management device 1 is mounted during the device power is OFF or no authentication is set.
  [Service Mode] → [Billing Setting] → [Management Function Choice]
- This menu is unavailable when the key counter is not inserted while only the key counter is set to Set by [Service Mode] → [Billing Setting] → [Management Function Choice].

<Use>

- Makes an adjustment by changing the image write start position in the sub scan direction on the 2nd side of duplex printing for plain paper. (to adjust the timing starting from the roller connection up to start of transfer output)
- When the 2nd side image on paper fed from the tray is shifted in the sub scan direction.
- This adjustment is available only for plain paper.

<Procedure>

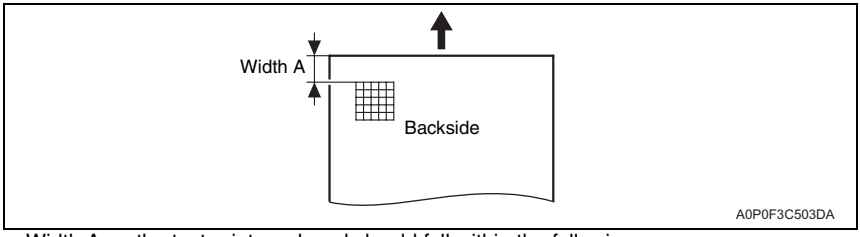

- Width A on the test print produced should fall within the following range.
- For measurement, use the image produced on the backside of the test print.

Specifications: 4.2 ± 0.5 mm
Setting range: -3.0 mm to +3.0 mm (in 0.2 mm increments)

1. Call the Administrator Settings to the screen.
2. Touch [System Settings] → [Expert Adjustment] → [Printer Adjustment] → [Leading Edge Adjustment (Duplex side 2)].
3. Press the Start key to let the machine produce a test print.
4. Check the dimension of width A on the test print.
5. If width A falls outside the specified range, change the setting using the [+] / [-] key.
   If width A is longer than the specifications, make the setting value smaller than the current one.
   If width A is shorter than the specifications, make the setting value greater than the current one.
6. Press the Start key to let the machine produce a test print.
7. Check the dimension of width A on the test print
8. If width A is outside the specified range, change the setting again and make a check again.
9. If width A falls within the specified range, touch [OK].

(4) Centering (Duplex 2nd Side)

- It will not be displayed when the following setting shows that management device 1 is mounted during the device power is OFF or no authentication is set.
  [Service Mode] → [Billing Setting] → [Management Function Choice]
- This menu is unavailable when the key counter is not inserted while only the key counter is set to Set by [Service Mode] → [Billing Setting] → [Management Function Choice].

<Use>

- To vary the print start position in the main scan direction for each paper source in the 2-sided mode.
- The image on the backside of the 2-sided copy deviates in the main scan direction.

<Procedure>

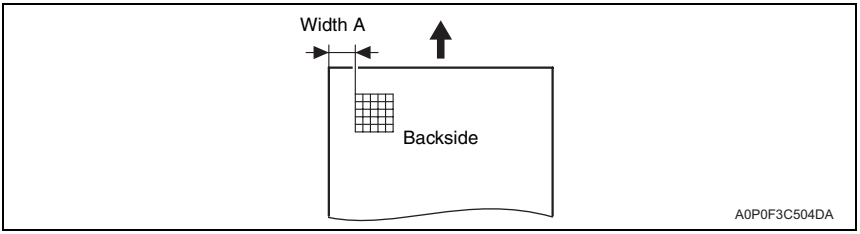

- Width A on the test print produced should fall within the following range.
- For measurement, use the image produced on the backside of the test print.

Specifications: 3.0 ± 0.5 mm
Setting range: -3.0 mm to +3.0 mm (in 0.2 mm increments)

1. Call the Administrator Settings to the screen.
2. Touch [System Settings] → [Expert Adjustment] → [Printer Adjustment] → [Centering (Duplex 2nd Side)].
3. Select the paper source to be adjusted.
4. Press the Start key to let the machine produce a test print.
5. Check the dimension of width A on the test print.
6. If width A falls outside the specified range, change the setting using the [+] / [-] key.
   If width A is longer than the specifications, make the setting value smaller than the current one.
   If width A is shorter than the specifications, make the setting value greater than the current one.
7. Press the Start key to let the machine produce a test print.
8. Check the dimension of width A on the test print on the backside of the copy.
9. If width A is outside the specified range, change the setting again and make a check again.
10. If width A falls within the specified range, touch [OK].
11. Following the same procedure, adjust for all other paper sources.
    (Use A4 or 8 $^1/_2$ × 11 plain paper for the manual bypass tray.)

(5) Erase Leading Edge

- It will be displayed only when the following setting is set to “Level 2”.
  [Service Mode] → [Enhanced Security] → [Administrator Feature Level]

<Use>

- To set the leading edge erase amount of the paper.
- To change the width of the area not printed along the leading edge of the paper.
- To make this setting independently for Front and Back sides.

<Procedure>

- The default setting is “4 mm”.

“4 mm”	5 mm	7 mm

(6) Vertical Adjustment

- It will be displayed only when the following setting is set to “Level 2.”
  [Service Mode] → [Enhanced Security] → [Administrator Feature Level]

<Use>

- To synchronize the paper transport speed with the image writing speed.
- The printed image on the copy distorts (stretched, shrunk).
- When the printed image on the copy is stretched in the sub scan direction.
- Able to make an individual adjustment for each paper type of plain paper, thick 1/1+, thick 2 or envelope.

<Procedure>

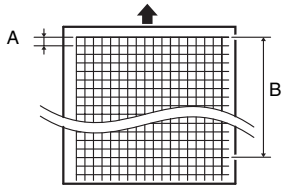

- Width A and width B on the test pattern produced should fall within the following ranges.
  Width A: equivalent to one grid
  Width B: equivalent to 48 grids

Specifications
A: 7.9 to 8.3
B: 389.1 to 392.1

Setting Range
A, B: -7 to +7

1. Load manual bypass tray with A3 or 11 × 17 plain paper.
2. Call the Administrator Settings to the screen.
3. Touch these keys in this order: [System Settings] → [Expert Adjustment] → [Vertical Adjustment].
4. Press the Start key to let the machine produce a test pattern.
5. Check width A (equivalent to one grid) and width B (equivalent to 48 grids) on the test pattern.
6. If width of A or B falls outside the specified range, change the setting using the [+]/[-] keys.
   If width A or B is longer than the specifications, make the setting value smaller than the current one.
   If width A or B is shorter than the specifications, make the setting value greater than the current one.
7. Press the Start key to let the machine produce a test pattern again.
8. Check width A and width B on the test pattern.
9. If width A or B falls outside the specified range, change the setting value and make a check again.
10. If width A or B falls within the specified range, touch [OK].
11. Following the same procedure, adjust for thick and envelope.

(7) Media Adjustment

<Use>

- Adjust the image transfer output (ATVC) on the 1st page and the 2nd page for each paper type.
- This function is provided to open [Transfer Voltage Fine Adj] of Service Mode up to administrator and the fine-adjusted value is reflected in the Service Mode setting.
- To use when the transfer failure at the trailing edge occurs.
- Pressing the [AUTO] key down activates the image transfer amperage upper and lower limit control. In this case, the machine uses the voltage determined by the transfer voltage control and the image transfer output fine adjustment value does not take effect.

<Procedure>

- The default setting is AUTO.

-8 to +7 (Step: 1)

1. Call the Administrator Settings to the screen.
2. Touch these keys in this order: [Expert Adjustment] → [Printer Adjustment] → [Media Adjustment].
3. Select the side of the image (1st side or 2nd side), on which the transfer failure occurs.

NOTE

- **For envelopes, OHP film and thick paper, only 1st side can be selected.**

4. Select the paper type with the transfer failure.
5. Enter the new setting from the [+] / [-] keys.
   To increase the ATVC value (in the direction of a foggier image), increase the setting value.
   To decrease the ATVC value (in the direction of a less foggy image), decrease the setting value.
6. Touch [OK] to validate the adjustment value.
7. Check the print image for any image problem.

* To automatically control the image transfer output without using the 2nd image transfer output fine adjustment value, press [AUTO].

C. Finisher Adjustment

(1) Center Staple Position

<Use>

- Adjust the stapling position for each paper size when printing with the center staple function.
- Adjust the stapling position for each paper size when printing with the center staple function.

<Procedure>

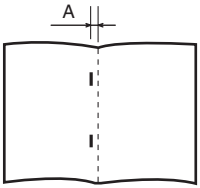

A11PF3C500DA

NOTE

- **After half-fold position adjustment, make this center staple position adjustment.**

1. Place five sheets of originals on the ADF.
2. Make a set of copy in the saddle stitching mode.
3. Check the amount of horizontal deviation (A) between the staple and the half fold positions on the set of copy.

Specification A: 0 ± 1.0 mm
Adjustment range: -10.0 mm to +10.0 mm (1 step: 0.1 mm)

4. If (A) is out of the specified range, make the following adjustment.
5. Call the Administrator Settings to the screen.
6. Touch [System Settings] → [Expert Adjustment] → [Finisher Adjustment] → [Center Staple Position].
7. Touch the paper size where staple position is adjusted.
8. Look at the copy and adjust the staple position with the [+]/[-] key.

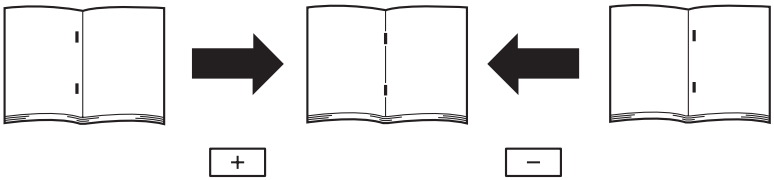

A11PF3C501DA

9. Touch [OK].
10. Make another set of copy sample and check the amount of deviation (A).

(2) Half-Fold Position

<Use>

- Use this adjustment to adjust the half-fold position in half-fold printing.

<Procedure>

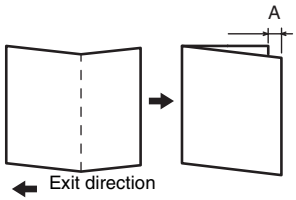

1. Place two sheets of originals on the ADF.
2. Make a copy in the folding mode.
3. Fold the copies along the crease.
4. Measure the amount of deviation (A).

Specification A: 0 ± 1.0 mm
Adjustment range: -10.0 mm to +10.0 mm (1 step: 0.1 mm)

5. If (A) is out of the specified range, make the following adjustment.
6. Call the Administrator Settings to the screen.
7. Touch [System Settings] → [Expert Adjustment] → [Finisher Adjustment] → [Half-Fold Position].
8. Touch the paper size where half-fold position is adjusted.
9. Look at the copy and adjust the half-fold position with the [+]/[-] key.

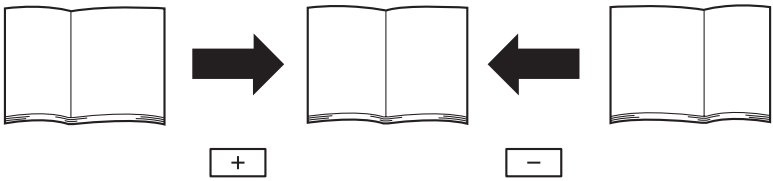

10. Touch [OK].
11. Make another set of copy sample and check the amount of deviation (A).

(3) Punch Horizontal Position Adjustment

<Use>

- To change the horizontal position of the punch holes.

<Procedure>

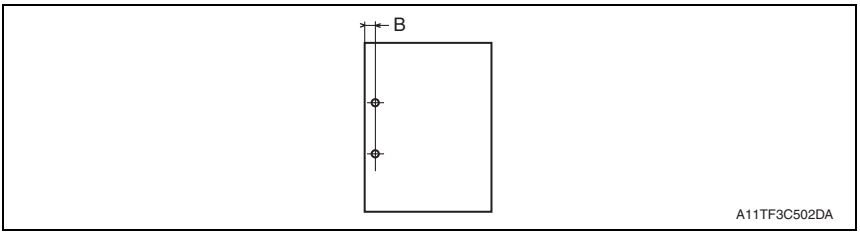

1. Make a copy sample in the punch mode.
2. Make an adjustment so that the width B is within the following range.

Specification B: 9.5 mm ± 1.0 mm (2-3 hole), 11.0 mm ± 1.0 mm (2-4 hole), 10.5 mm ± 1.0 mm (SWE4 hole)
Adjustment range: -10.0 mm to +10.0 mm (1 step: 0.1 mm)

3. Call the Administrator Settings to the screen.
4. Touch [System Settings] → [Expert Adjustment] → [Finisher Adjustment] → [Punch Horizontal Position Adjustment].
5. Touch the paper type where punch horizontal position is adjusted.
6. Look at the copy and adjust the punch horizontal position with the [+]/ [-] key.
   To make width B greater: Enter the value of [+]
   To make width a smaller: Enter the value of [-]

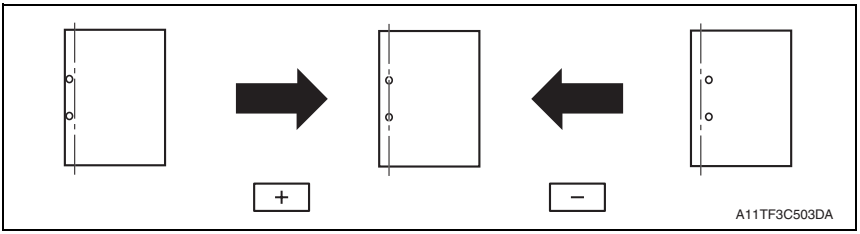

7. Touch [OK].
8. Make another set of copy sample and check the amount of deviation (B).

(4) Punch Regist Loop Size Adjustment

<Use>

- Adjusts the punch loop size used for paper exited from the main body.
- To address problems such as misaligned punch holes, wrinkled paper, and jam at the punch registration section.

<Procedure>

1. Call the Administrator Settings to the screen.
2. Touch [System Settings] → [Expert Adjustment] → [Finisher Adjustment] → [Punch Regist Loop Size Adjustment].
3. Touch the paper size where punch regist loop size is adjusted.
4. Set the correction value using the [+]/[-] keys.
   Misaligned punched holes: Enter the value of [+]
   Wrinkled paper: Enter the value of [-]
5. Touch [OK].

(5) Paper Alignment Plate Settings

<Use>

- Fine adjusts the paper alignment plate that aligns ejected paper when FS-529 is installed.

<Procedure>

1. Call the Administrator Settings to the screen.
2. Touch [System Settings] → [Expert Adjustment] → [Finisher Adjustment] → [Paper Alignment Plate Settings].
3. Select the [Paper Alignment Plate Pos.(Back)] or [Paper Alignment Plate Pos.(Front)].

The default setting is 0.0 mm.
Setting range: -10.0 mm to +10.0 mm (in 0.1 mm increments)

4. Set the correction value using the [+]/[-] keys.
5. Touch [OK].

D. Paper Separation Adjustment

(1) Use

- For duplex printing, the paper separation position is adjusted for the first and second sides of paper.
- To adjust the balance between paper separation and image transfer performances by changing the paper separation position in duplex printing.

(2) Procedure

- The default setting is 0.

1. Call the Administrator Settings to the screen.
2. Touch [System Settings] → [Expert Adjustment] → [Paper Separation Adjustment].
3. Select [Front] or [Back].
4. Change the setting value with [+] or [-] key.
   Priority on paper separation performance: Increase the setting value
   Priority on image transfer performance: Decrease the setting value
5. Touch [OK] to determine the adjusted value.
6. Make a print and check the image.

E. Gradation Adjustment

- It will not be displayed when the following setting shows that management device 1 is mounted during the device power is OFF or no authentication is set.
  [Service Mode] → [Billing Setting] → [Management Function Choice]
- This menu is unavailable when the key counter is not inserted while only the key counter is set to Set by [Service Mode] → [Billing Setting] → [Management Function Choice].

(1) Use

- To make an automatic adjustment of gradation based on the test pattern produced and the readings taken by the scanner.
- Use this adjustment when reproduction of gradations and density has deteriorated.
- The drum unit, developer or developing unit has been replaced.

Maximum Density Adjustment : The density of solid image can change depending on the variations in developing, light intensity of the exposure lamp, and PC drum sensitivity as well as the changes in the amount of electrostatic charge of toner due to the ambient environment and duration of machine use. To prevent the change, the amount of toner adhered to paper is read by the scanner and in accordance with the result, Vdc is adjusted. Perform this adjustment before the Gradation Adjustment.

Gradation Adjustment : The gradations are corrected.

Initialization : The current gradation correction table (Items adjusted in [Gradation Adjustment]) and the difference value of Vdc (Items adjusted in [Maximum Density Adjustment]) are cleared.
After selecting [Initialization] → [Initialize], if you press the Start key, initialization starts.

(2) Procedure

1. Load plain paper of A3/11 x 17 or A4/8 $^1/_2$ x 11 into the paper feed tray.
2. Touch [System Settings] → [Expert Adjustment] → [Gradation Adjustment].
3. Touch [Maximum Density Adjustment], select the paper size, and press the Start key.
   A test pattern is output.
4. Place the test pattern produced on the original glass.

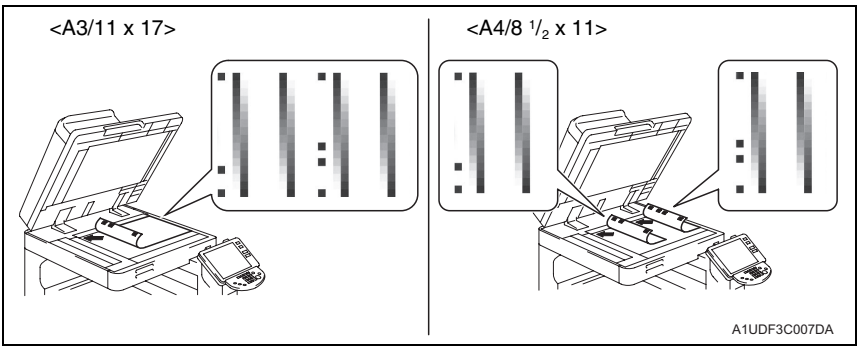

5. Place ten blank paper on the test pattern and close the original cover.
6. Press the Start key. (The machine will then start scanning the test pattern.)
7. Touch [Gradation Adjustment], select the paper size, and press the Start key.
   A test pattern is output.

8. Place the test pattern produced on the original glass.

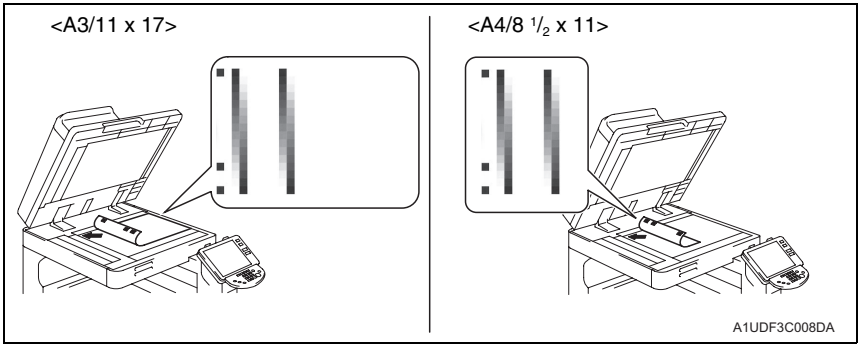

9. Place ten blank paper on the test pattern and close the original cover.
10. Press the Start key. (The machine will then start scanning the test pattern.)
11. Repeat steps from 7 through 10 twice (a total of three times).
If the image is faulty, perform the troubleshooting procedures for image problems.

F. Scanner Area

- Use the following test chart for the adjustment of the scanner section.
- If the test chart is not available, a scale may be used instead.
- It will be displayed only when the following setting is set to “Level 2.”
  [Service Mode] → [Enhanced Security] → [Administrator Feature Level]
- It will not be displayed when the following setting shows that management device 1 is mounted during the device power is OFF or no authentication is set.
  [Service Mode] → [Billing Setting] → [Management Function Choice]
- This menu is unavailable when the key counter is not inserted while only the key counter is set to Set by [Service Mode] → [Billing Setting] → [Management Function Choice].

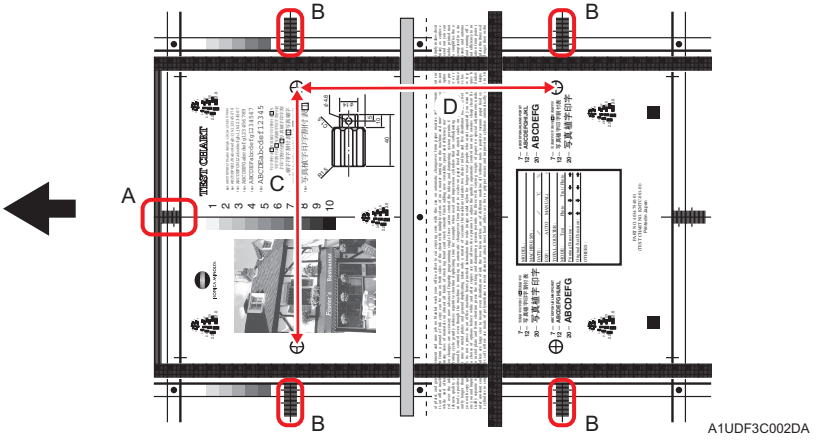

Adjustment item	Ref.
A: Scanner Adjustment: Leading Edge Adjustment	P.229
B: Scanner Adjustment: Centering	P.230
C: Horizontal Adjustment	P.231
D: Vertical Adjustment	P.232

(1) Scanner Adjustment: Leading Edge

<Use>

- To adjust variations in mounting accuracy and sensitivity of the scanner home sensor and in mounting accuracy of the original width scale by varying the scan start position in the main scan direction.
- When the original glass is replaced.
- When the original width scale is replaced.
- The scanner home sensor has been replaced.

<Procedure>

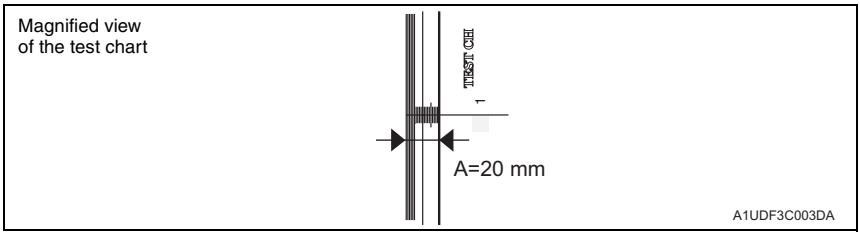

- A width on the test chart and one on the test print are measured and adjusted so that the difference of A width satisfies the specifications shown below.
- An adjustment must have been completed correctly of [Leading Edge Adjustment] of the Printer Adjustment.

Specifications
A: ± 0.5 mm

Setting range
-3.0 to +3.0 (in 0.1 mm increments)

1. Call the Administrator Settings to the screen.
2. Touch [System Settings] → [Expert Adjustment] → [Scanner Adjustment] → [Scanner Adjustment: Leading Edge].
3. Position the test chart correctly so that the original reference point is aligned with the scale.
4. Press the Start key to make a copy.
5. Check point A on the image of the test print.
6. If the image falls outside the specified range, change the setting using the [+] / [-] key.
   If the copy image is less than the specified length, increase the setting value.
   If the copy image exceeds the specified length, decrease the setting value.
7. Press the Start key to make another test print.
8. Check the image on the test print to see if the specifications are met.
9. Make adjustments until the specifications are met.

(2) Scanner Adjustment: Centering

<Use>

- To adjust part-to-part variations in accuracy of scanner parts and their mounting accuracy by varying the scan start position in the main scan direction.
- When the CCD unit is replaced.
- When the original glass is replaced.
- The scanner home sensor has been replaced.

<Procedure>

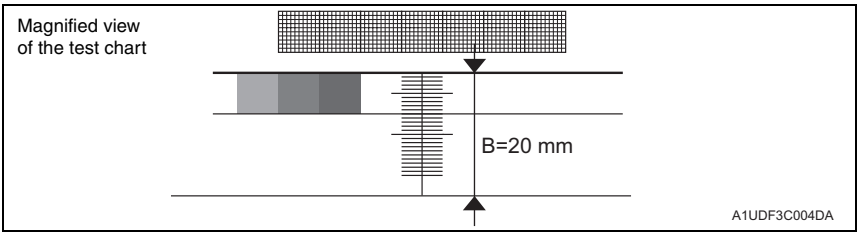

- B width on the test chart and one on the test print are measured and adjusted so that the difference of B width satisfies the specifications shown below.
- An adjustment must have been completed correctly of [Leading Edge Adjustment] of the Printer Adjustment.

Specifications
B: ± 1.0 mm

Setting range
-4.0 to +4.0 (in 0.1 mm increments)

1. Call the Administrator Setting to the screen.
2. Touch [System Settings] → [Expert Adjustment] → [Scanner Adjustment] → [Scanner Adjustment: Centering].
3. Position the test chart correctly so that the original reference point is aligned with the scale.
4. Press the Start key to make a copy.
5. Check point B on the image of the test print.
6. If the image falls outside the specified range, change the setting using the [+] / [-] key.
   If the copy image is less than the specified length, increase the setting value.
   If the copy image exceeds the specified length, decrease the setting value.
7. Press the Start key to make another test print.
8. Check point B of the image on the test print to see if the specifications are met.
9. Make adjustments until the specifications are met.

(3) Horizontal Adjustment

<Use>

- To adjust the zoom ratio in the main scan direction for the scanner section.
- The CCD unit has been replaced.

<Procedure>

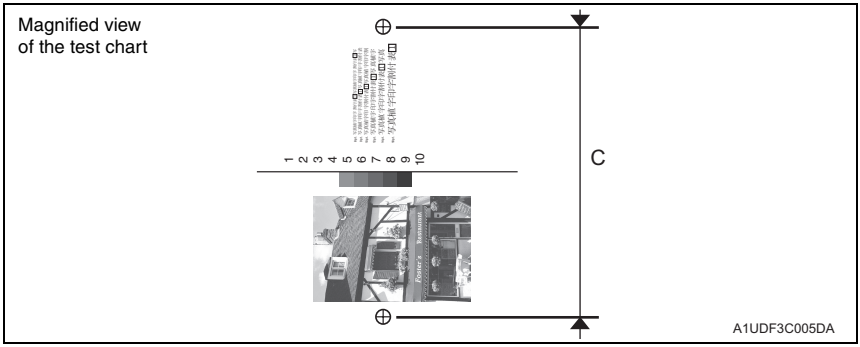

- Measure C width on the test chart and on the test print, and adjust the gap to be within the following specification.
- An adjustment must have been completed correctly of [Vertical Adjustment] of the printer adjustment.

Specifications
C: ± 1.0 mm

Setting range
0.990 to 1.010 (in 0.001 increments)

1. Call the Administrator Settings to the screen.
2. Touch [System Settings] → [Expert Adjustment] → [Scanner Adjustment] → [Horizontal Adjustment].
3. Position the test chart correctly so that the original reference point is aligned with the scale.
4. Press the Start key to make a test print.
5. Check the C width on the image of the test print.
6. If the image falls outside the specified range, change the setting using the [+] / [-] key.
   If the C width on the copy sample is less than one on test chart, increase the setting.
   If the C width on the copy sample exceeds one on color chart, decrease the setting.
7. Press the Start key to make another test print.
8. Check the image on the test print to see if the specifications are met.
9. Make adjustments until the specifications are met.

(4) Vertical Adjustment

<Use>

- To adjust the zoom ratio in the sub scan direction for the scanner section.
- The exposure unit has been replaced.
- The scanner motor has been replaced.
- The scanner drive cables have been replaced.

<Procedure>

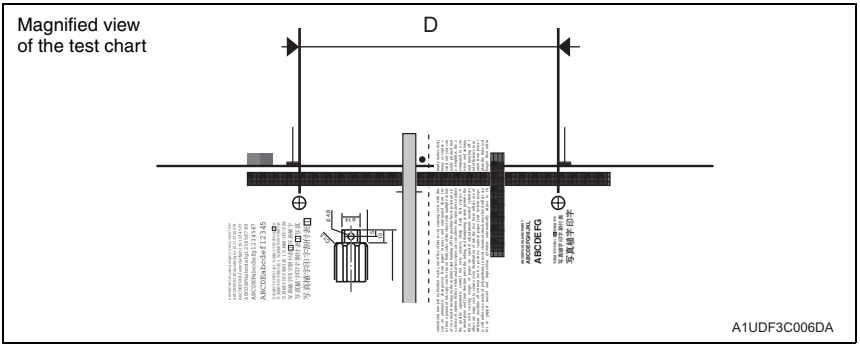

- Measure D width on the test chart and on the test print, and adjust the gap to be within the following specification.
- An adjustment must have been completed correctly of [Vertical Adjustment] of the printer adjustment.

Specifications
D: ± 1.5 mm

Setting Range
0.990 to 1.010 (in 0.001 increments)

1. Call the Administrator Settings to the screen.
2. Touch [System Settings] → [Expert Adjustment] → [Scanner Adjustment] → [Vertical Adjustment].
3. Position the test chart correctly so that the original reference point is aligned with the scale.
4. Press the Start key to make a test print.
5. Check the D width on the image of the test print.
6. If the image falls outside the specified range, change the setting using the [+] / [-] key.
   If the D width on the copy sample is less than one on color chart, increase the setting.
   If the D width on the copy sample exceeds one on test chart, decrease the setting.
7. Press the Start key to make another test print.
8. Check the image on the test print to see if the specifications are met.
9. Make adjustments until the specifications are met.

G. ADF Adjustment

- It will be displayed only when the following setting is set to “Level 2.”
  [Service Mode] → [Enhanced Security] → [Administrator Feature Level]

(1) Centering

<Use>

- To adjust the read position in the main scanning direction.
- When the result is Unable in the [Centering Auto Adjustment].
- When ADF has been replaced.

<Procedure>

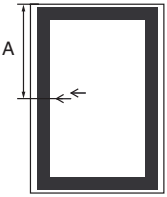

A0P0F3C600DA

1. Place the chart in the document feed tray (with the side having an arrow facing up).
2. Make a full size copy of the chart.
3. Check that the difference in the widths of A between the chart and the copy sample falls within the specified range.

Specification A: 0 ± 2.0 mm
Adjustment range: -3.0 mm to +3.0 mm (1 step: 0.1 mm)

4. Call the Administrator Settings to the screen.
5. Touch [System Settings] → [Expert Adjustment] → [ADF Adjustment] → [Centering].
6. Look at the copy and make adjustment with the [+]/[-] key.
   If the difference in the widths of A is greater than the specifications, enter the [+] value.
   If the difference in the widths of A is smaller than the specifications, enter the [-] value.
7. Touch [OK].
8. Make a copy of the chart again and check that the difference in the widths of A falls within the specified range.

(2) Original Stop Position

<Use>

- To manually adjust the original stop position and the read position in each of the ADF modes.
- When the result is Unable in the [Auto Adj. of Stop Position].

<Procedure>

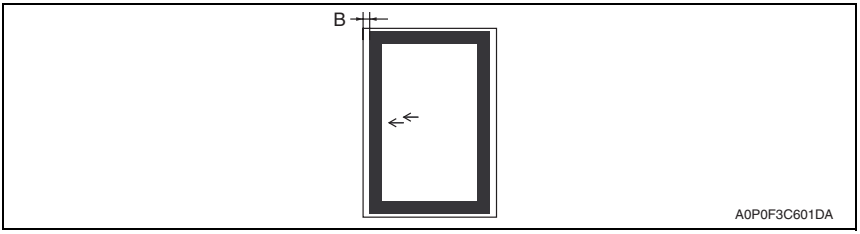

1. Place the chart in the document feed tray (with the side having an arrow facing up).
2. Make a full size copy of the chart.

NOTE

- **In the same way place the chart with the blank side facing up in the document feed tray in the duplex mode and make a copy. Check the difference in the widths of a between the chart and the second sided surface of the copy sample.**

3. Check that the difference in the widths of B between the chart and the copy sample falls within the specified range.

Specification B: 0 ± 2.0 mm
Adjustment range: -4.0 mm to +4.0 mm (1 step: 0.1 mm)

4. Call the Administrator Settings to the screen.
5. Touch [System Settings] → [Expert Adjustment] → [ADF Adjustment] → [Original Stop Position].
6. Look at the copy and adjust [Front] or [Back] with the [+]/[-] key.
   If the difference in the widths of B is greater than the specifications, enter the [+] value.
   If the difference in the widths of B is smaller than the specifications, enter the [-] value.
7. Touch [OK].
8. Make a copy of the chart again and check that the difference in the widths of B falls within the specified range.

(3) Centering Auto Adjustment

<Use>

- To automatically adjust the read position in the main scanning direction.
- When ADF has been replaced.

<Procedure>

1. Call the Administrator Settings to the screen.
2. Touch [System Settings] → [Expert Adjustment] → [ADF Adjustment] → [Centering Auto Adjustment].
3. Place the chart in the document feed tray (with the side having an arrow facing up).
4. Press the Start key.
5. Make sure that result is OK. Then, touch [New].
6. Touch [Close].

NOTE

- **If the result is Unable:**
  Check and correct the skew of the document.
  Manually correct the value of [Original Stop Position].
  See P.234

(4) Auto Adj. of Stop Position

<Use>

- To automatically adjust the read position for the Sub Scanning Direction.
- To check skew feed.
- When ADF has been replaced.

<Procedure>

1. Call the Administrator Settings to the screen.
2. Touch [System Settings] → [Expert Adjustment] → [ADF Adjustment] → [Auto Adj. of Stop Position].
3. Touch [Front] or [Back].
4. Place the chart in the document feed tray.
   [Front]: Set the chart with its arrow side facing upward.
   [Back]: Set the chart with its blank side facing upward.
5. Press the Start key.
6. Make sure that result is OK. Then, touch [New].
7. Touch [Close].

NOTE

- **If the result is Unable:**
  Check and correct the skew of the document.
  Manually correct the value of [Original Stop Position].
  See P.234

H. Line Detection

(1) Prior Detection Setting

<Use>

- To set whether or not to perform pre-detection of stain on the ADF original glass.
- To set the detection level of the pre-detection of stain on the ADF original glass.
- To set how to display the warning when stain on the ADF original glass is detected.
- Use when changing the display of the warning which requests the cleaning of the stain on the glass detected by the pre-detection of the lines.
  TYPE1 : Warning will be displayed by the maintenance mark. (warning code: D-1)
  TYPE2 : Warning will be displayed on the message area on the basic screen.
  TYPE3 : Warning will be displayed on all screens.
  OFF : Warning will not be displayed.

- Use when changing the detection level for the pre-detection of stain on the original glass.
  Low : Stain on the glass will not be detected easily.
  Normal : Normal detection level
  High : Stain on the glass will easily be detected.

<Procedure>

- The default setting is Yes.

"Yes" No

NOTE

- **[Warning Level] and [Detection Level] can be set when "Yes" is selected.**
- **Be aware that selecting "No" and performing the pre-detection with the following setting will display "NG."**
  [Service Mode] → [Machine] → [ADF Scan Glass Contamination]
- **When "No" is selected, the original glass cleaning operation after the job ends does not operate.**

<Warning Level>

- The default setting is TYPE2.

TYPE1 "TYPE2" TYPE3 OFF

<Detection Level>

- The default setting is Std.

Low "Std." High

(2) Feed Cleaning Settings

<Use>

- To set the operation for detection and removing operation of stain on the ADF original glass when feeding the original.
- Use when changing the operation for detection and removing operation of stain on the ADF original glass when feeding the original.
  Do not remove : Cleaning is not conducted as the cleaning brush does not rotate.
  Remove : Glass is cleaned with the cleaning brush rotating at one original intermittent.

<Procedure>

- The default setting is Remove.

"Remove" Do not remove

I. User Paper Settings

- It will be displayed only when the following setting is set to “Level 2.”
  [Service Mode] → [Enhanced Security] → [Administrator Feature Level]

(1) Use

- To set and register individual user paper that includes different basic weight and transfer output fine adjustment data.
- To register a paper type that is suitable for customer’s intended use and use environment.
- The feature available from [Service Mode] → [System 2] → [User Paper Settings] is extended to Administrator. However, the fusing temperature setting is not possible in Administrator Settings.
- The user paper registration keys and corresponding paper types are as follows:
  User Paper 1, 2 : Plain paper
  User Paper 3 : Thick 1
  User Paper 4 : Thick 2

(2) Procedure

1. Call the Administrator Settings to the screen.
2. Touch [System Settings] → [Expert Adjustment] → [Forward] → [User Paper Settings].
3. Select the desired key from [User Paper 1] to [User Paper 4] to register user paper.
4. Select [Basic Weight] and enter a value with the [+]/ [-] key.
5. Select one from the following; [Media Front] or [Media Back]. Enter a transfer output value with the [+]/[-] key.
   Setting range: -7 to +8 (1 step: 1 increment or decrement)
6. Touch [Print Interval Extension], and set the Print Interval Extension mode.
   See P.379
7. Load the tray with A4S or 8 1/2 x 11S paper.
8. Touch [Test Pattern Output]. Specify a paper feed tray and select either 1st side or 2nd side.
9. Press the Start key and check the image of the output test pattern. If the image is not acceptable, adjust the settings, output and check a test pattern again.

(3) Test pattern in user paper settings

- The printable test pattern for user paper settings is provided to ease determining the most appropriate transfer output value used when customizing user paper.
- This test pattern changes output voltage as shown below based on the standard voltage A (voltage determined by the image transfer auto transfer voltage control) on a sheet of paper.

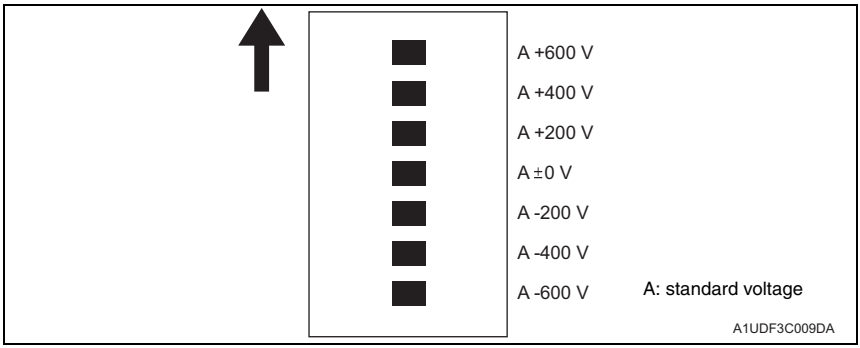

J. Erase Adjustment

(1) Non-Image Area Erase Operation Settings

<Use>

- Configure Non-Image Area operation settings.
  - Auto : Automatically detects the background density of the original, and selects either [Bevel] or [Rectangular] accordingly.
  - Specify : Allows you to manually specify an erase method and original density. As an erase method, select [Bevel] or [Rectangular]. Specify an original density from five levels.

<Procedure>

- The default setting is Specify.

Auto "Specify"

K. Maximum Density Adjustment

(1) Use

- After completing Gradation Adjustment, supplementarily make a manual fine-adjustment of Vdc to change the maximum amount of toner to be adhered to paper so that the gradation and density are adjusted to the target reproduction level.
- Use this adjustment if [Maximum Density Adjustment] provided in the [Gradation Adjustment] does not help to obtain the target density.
- The function provided in [Service Mode] → [Image Process Adjustment] → [Max Image Density Adj] is made available to the administrator. However, the adjustable range is limited to 5 levels in the Administrator Settings.

(2) Procedure

- The default setting is 0.

-2 to +2 (step: 1*)

*: 1 step is the equivalent of 0.02 of difference in density.

1. Enter the Administrator Settings.
2. Touch [System Settings] → [Expert Adjustment] → [Forward] → [Maximum Density Adjustment].
3. Select [Light] or [Dark] to change its setting.
4. Check that printed image has no problem.

L. Drum Dry

(1) Use

- To rotate the PC motor to remove condensation from around the PC drum.
- Use this function when a quick change in room temperature occurs or image failure occurs due to condensation around the PC drum under a very humid condition.
- Use this function when the developer or the developing unit is replaced.

(2) Procedure

1. Enter the Administrator Settings.
2. Touch [System Settings] → [Expert Adjustment] → [Forward] → [Drum Dry].
3. Press the Start key to start Drum Dry.
   To cancel the operation, press the Stop key
4. When Drum Dry is completed, a message appears.

M. Replenish Toner

(1) Use

- If many copies of high density original reduce the T/C ratio and causes ID decrease, toner is automatically supplied to the developing unit to maintain the specified T/C level.
- Use this function when the T/C ratio has decreased.

(2) Procedure

1. Enter the Administrator Settings.
2. Touch [System Settings] → [Expert Adjustment] → [Forward] → [Replenish Toner].
3. If you press the Start key, the current toner density is detected. If the density is lower than the specified value, toner is supplied. Then, toner is agitated.
4. When toner supply is completed, a message appears.

N. PS Designer Settings

(1) Use

- To set whether to enable or disable the density correction control for printing from the PS printer driver.
- Images produced by the machine in accordance with the PostScript specifications tend to be darker compared to images produced by the conventional machines or those from the PCL driver.
  As an action, density correction is provided for PS printing to adjust image density.
  This setting is used to set whether to enable or disable density correction.
  ON : Disables density correction so that images are output in accordance with the PostScript specifications.
  OFF : Enables density correction.

(2) Procedure

- The default setting is OFF.

ON "OFF"

10.6.8 System Settings-List/Counter

A. Management List

- It will not be displayed when the following setting shows that vendor is mounted.
  [Service Mode] → [Billing Setting] → [Management Function Choice]
  (It will be displayed when the key counter is mounted or when the following setting shows that switch No.33 is set to [01] at HEX assignment.
  [Service Mode] → [System 2] → [Software Switch Setting])

(1) Job Settings List

<Use>

- To output the value set by the setting menu.

<Procedure>

1. Touch [Job Settings List].
2. Select the feed tray.
3. Select simplex or duplex print, and touch the Start key.

B. Paper Size/Type Counter

<Use>

- To register the combination of the specific paper size and the paper type, and to set the count.

<Procedure>

1. Press a key out of 1 to 10 registration keys.
2. Select the paper type.
3. Touch the paper size key to select the paper size.

C. Meter Counter List

- Setting will be available only when the following setting shows that either authentication device, management device 2, vendor 2 is mounted.
  [Service Mode] → [Billing Setting] → [Management Function Choice]

(1) Use

- To output the meter counter list.
- To print out the list in this setting because counter list cannot be printed when the following setting shows that vendor is mounted.
  [Meter Counter] → [Details]

(2) Procedure

1. Touch [Meter Counter List].
2. Select the Feed tray.
3. Select simplex or duplex print, and touch the Start key.

D. Check Consumables List

- Setting will be available only when the following setting shows that either authentication device, management device 2, vendor 2 is mounted.
  [Service Mode] → [Billing Setting] → [Management Function Choice]

(1) Use

- To output the consumable life list.
- To print out the list in this setting because the list cannot be printed when the following setting shows that vendor is mounted.
  [Utility] → [Check Consumable Life]

(2) Procedure

1. Touch [Consumable Life List].
2. Select the feed tray.
3. Select simplex or duplex print, and touch the Start key.

10.6.9 System Settings-Reset Settings

A. System Auto Reset

(1) Use

- To set the period of time until system auto reset starts functioning.

(2) Procedure

<Priority Mode>

- To set the functions displayed during system auto reset from Copy, User Box and Scan/Fax.
- The default setting is Copy.

"Copy" User Box Scan/Fax

<System Auto Reset Time>

- The default setting is 1 min.

"1 min." (1 to 9, OFF)

B. Auto Reset

(1) Use

- To set the period of time until auto reset starts functioning in Copy, Scan/Fax, User Box and Web Browser.

(2) Procedure

- The default setting is 1 min.

"1 min." (1 to 9, No)

C. Job Reset

(1) When Account is changed

- It will not be displayed when the following setting shows that authentication device is mounted.
  [Service Mode] → [Billing Setting] → [Management Function Choice]
  (It will be displayed when the key counter is mounted.)

<Use>

- Selects whether to reset (initialize) a machine when the key counter is unplugged, a magnetic card is pulled out, or user authentication/account track is set.
- To select not to reset to the default settings even when the accounts are changed through the use of a data management device.

<Procedure>

- The default setting is Reset.

"Reset" Do Not Reset

(2) When Original is set on ADF

<Use>

- Select whether to reset the function when originals are placed on the ADF.

<Procedure>

- The default setting is Do Not Reset.

Reset "Do Not Reset"

(3) Next Job: Staple Setting

<Use>

- To set whether to cancel the staple setting when the staple setting job started and the next job setting has become available.

<Procedure>

- The default setting is OFF.

ON	“OFF”

(4) Next Job: Original Set/Bind Direction

<Use>

- To set whether to cancel the original set/bind direction when the job (which original set/bind direction is set) started and the next job setting has become available.

<Procedure>

- The default setting is OFF.

ON	“OFF”

(5) Next Job: Reset Data After Job

<Use>

- To set whether to cancel the setting for scanning or transmitting fax when the scanning is finished or fax is transmitted, making the next job setting available.
  (The address will be cleared even when [OFF] is selected.)

<Procedure>

- The default setting is ON.

“ON”	OFF

10.6.10 System Settings-User Box Settings

A. Delete Unused User Box

- It will be displayed only when the hard disk is installed.

(1) Use

- To delete the unnecessary box without data.

(2) Procedure

1. Touch [Delete Unused User Box].
2. Touch [Yes] on the Check screen.

B. Delete Secure Print Documents

- It will be displayed only when the hard disk is installed.

(1) Use

- To delete the whole classified documents in the box.

(2) Procedure

1. Touch [Delete Secure Documents].
2. Touch [Yes] on the Check screen.

C. Auto Delete Secure Document

- It will be displayed only when the hard disk is installed.

(1) Use

- To set whether or not to delete the confidential documents in the box after a certain period of time. It also sets the period of time to store data.

(2) Procedure

- The default setting is 1 Day.
- The period can be also set on a minute/hour basis with the range of 5 minutes to 12 hours in increments of 1 minute.

12 Hours “1 Day” 2 Days 3 Days 7 Days 30 Days Save

D. Encrypted PDF Delete Time

- It will be displayed only when the hard disk is installed.

(1) Use

- Specifies whether to delete encrypted PDF data stored in the box after a lapse of a predetermined period of time.
  Sets the time period for which encrypted PDF data can be stored.

(2) Procedure

- The default setting is 1 Day.
- The period can be also set on a minute/hour basis with the range of 5 minutes to 12 hours in increments of 1 minute.

12 Hours “1 Day” 2 Days 3 Days 7 Days 30 Days Save

E. ID & Print Delete Time

- It will be displayed only when the hard disk is installed.

(1) Use

- Specifies whether to delete ID & print data stored in the box after a lapse of a predetermined period of time.
  Sets the time period for which ID & print data can be stored.

(2) Procedure

- The default setting is 1 Day.
- The period can be also set on a minute/hour basis with the range of 5 minutes to 12 hours in increments of 1 minute.

12 Hours “1 Day” 2 Days 3 Days 7 Days 30 Days Save

F. Document Hold Setting

(1) Use

- Selects whether to store the document again in the box after it was retrieved from the box.
- If the function is set to No, the document is automatically deleted after it was retrieved.

(2) Procedure

- The default setting is OFF.

ON “OFF”

G. External Memory Function Settings

(1) Use

- This operation enables or disables functions using an external memory connected to this machine.
- Capability to enable [Save Document] and [Print Document] separately.

Save Document : a function that saves scanned documents into the external memory using [Save Document] in the box mode.
Print Document : a function that prints and sends documents saved in the external memory using [Use Document] in the box mode.

(2) Procedure

<Save Document>

- The default setting is OFF.

ON	“OFF”

<Print Document>

- The default setting is ON.

“ON”	OFF

H. Allow/Restrict User Box

(1) Use

- Specify whether to release functions so that the user can create, edit, or delete a User Box.

(2) Procedure

- The default setting is Allow.

“Allow”	Prohibit

I. ID & Print Delete after Print Setting

- It will be displayed only when the hard disk is installed.

(1) Use

- Select whether to check that the document saved in the ID & Print User Box has been deleted after printed.

(2) Procedure

- The default setting is Confirm with User.

“Confirm with User”	Always Delete

J. Document Delete Time Setting

- It will be displayed only when the hard disk is installed.

(1) Use

- This function enables the administrator to specify the time to delete a document from a User Box when you cannot specify the document deletion time. When automatically specifying the document deletion time, select [Yes] and set the deletion time.

(2) Procedure

- The default setting is 1 Day.
- The period can be also set on a minute/hour basis with the range of 5 minutes to 12 hours in increments of 1 minute.

12 Hours “1 Day” 2 Days 3 Days 7 Days 30 Days Save

10.6.11 System Settings-Standard Size Setting

- It will be displayed only when the following setting is set to “Level 2.”
  [Service Mode] → [Enhanced Security] → [Administrator Feature Level]

A. Original Glass Original Size Detect

(1) Use

- To change the document size detection table.

(2) Procedure

- The default setting is Table1.

“Table1” Table2

B. Foolscap Size Setting

(1) Use

- To set the size for foolscap paper.
- Upon setup.

(2) Procedure

- Select the size from among the following five.

220 x 330 mm $8^1/_2$ x 13 $8^1/_4$ x 13 $8^1/_8$ x $13^1/_4$ “8 x 13”

10.6.12 System Settings-Stamp Settings

A. Header/Footer Settings

(1) Use

- Saves or deletes header/footer settings.
- Able to obtain registered header/footer data by [Application] → [Stamp/Composition]

(2) Procedure

- Touch [New] to register new headers and footers.

B. Fax TX Settings

(1) Use

- Specifies whether to reset a stamp setting when fax is sent.

(2) Procedure

- The default setting is Cancel.

“Cancel” Do Not Cancel

10.6.13 System Settings-Blank Page Print Settings

A. Use

- Specifies whether to print a stamp/page number on blank pages.

B. Procedure

- The default setting is Print.

"Print"	Do Not Print

10.6.14 System Settings-Application Key Settings

- This is displayed only when the optional i-Option (LK-101 or LK-103) is activated.

A. Use

- To assign the additional functions provided by i-Option to the application keys.
- This settings allow free application key assignment to additional functions provided by i-Option as well as to "User Box", "Fax/Scan" and "Copy" to which the application keys were conventionally assigned. (However, Key 0 is assigned to the function of displaying the application menu so that other functions cannot be assigned to Key 0.)
- The functions that can be assigned are as follows:
  Copy, Fax/Scan, User Box, Image Panel, Web Browser, My Panel

B. Procedure

1. Select [Key 1] or [Key 2].
2. Select a function to which the key is assigned, and touch [OK].

10.6.15 System Settings-Skip Job Operation Settings

- It will not be displayed when the following setting shows that Vendor 2 is mounted.
  [Service Mode] → [Billing Setting] → [Management Function Choice]

A. Use

- Configure whether to start processing for the next job when the current job stops due to running out of paper in the paper tray.

B. Procedure

1. Touch [Skip Job Operation Settings].
2. Make settings and touch [OK].

10.6.16 System Settings-Default Bypass Paper Type Setting

A. Use

- Configure the initial settings for the paper type to be used for the bypass tray.

B. Procedure

1. Touch [Default Bypass Paper Type Setting].
2. Select the desired paper type and touch [OK].

10.6.17 System Settings-Page Number Print Position

A. Use

- Specify a page number print position when printing page numbers after configuring 2-sided print or booklet settings. Select whether to print the page numbers on a same position on all pages or on positions symmetric with respect to the stapling position.

B. Procedure

1. Touch [Page Number Print Position].
2. Check test print and fine adjust the position.

10.6.18 System Settings-Advanced Preview Setting

A. Original direction setting display

(1) Use

- To set whether to display the screen where the original set direction can be selected after touching [Preview] when printing with the advanced preview function.

(2) Procedure

- The default setting is ON.

"ON"	OFF

10.6.19 Administrator/Machine Settings-Administrator Registration

A. Use

- Registers administrator information displayed Help service/Administrator information screen as well as sender addresses used for E-mail transmission from the machine.

B. Procedure

1. Touch [Administrator Name], [E-mail Address] to input them.
2. Using the 10-key pad, enter the extension No.

10.6.20 Administrator/Machine Settings-Input Machine Address

A. Use

- To register the name of the machine and e-mail address.
  Machine Name : When the file name of the transmitted file or the document name of document registered in Box is generated automatically, it is added.
  E-mail : To be used as from address at internal Fax transmission.

B. Procedure

1. Touch [Device Name] and input the name.
2. Touch [E-mail Address] and input the E-mail address.

10.6.21 One-Touch/User Box Registration-Create One-Touch Destination

A. Address Book

(1) E-mail

<Use>

- To register/change the e-mail address for transmitting the scanned data by e-mail.

<Procedure>

- Touch [New] to register the new address.
- Select any displayed address to check, edit, or delete the setting.

(2) User Box

- It will not be displayed when the following setting shows that authentication device or the vendor is mounted.
  [Service Mode] → [Billing Setting] → [Management Function Choice]
- It will be displayed only when the hard disk is installed.

<Use>

- To register or change the box address for storing the scanned data to the box in the hard disk of the machine.

<Procedure>

- Touch [New] to register the new address.
- Select any displayed address to check, edit, or delete the setting.
- At least one user box must be registered in order to register the box address.

(3) Fax

<Use>

- To register or change the fax number for transmitting the fax.

<Procedure>

- Touch [New] to register the new address.
- Select any displayed address to check, edit, or delete the setting.

(4) PC (SMB)

<Use>

- To register or change the SMB address for transmitting the scanned data by SMB.

<Procedure>

- Touch [New] to register the new address.
- Select any displayed address to check, edit, or delete the setting.

(5) FTP

<Use>

- To register and change the FTP address for transmitting the scanned data by FTP.

<Procedure>

- Touch [New] to register the new address.
- Select any displayed address to check, edit, or delete the setting.

(6) WebDAV

<Use>

- To register and change the WebDAV address for transmitting the scanned data by WebDAV.

<Procedure>

- Touch [New] to register the new address.
- Select any displayed address to check, edit, or delete the setting.

(7) IP Address Fax

<Use>

- To register/change the IP address fax destination when transmitting the IP address fax data.

<Procedure>

- A new address can be registered by touching [New].
- Select any displayed address to check, change or delete the setting.

(8) Internet Fax

<Use>

- To register/change the Internet fax address when transmitting the internet fax data.

<Procedure>

- A new address can be registered by touching [New].
- Select any displayed address to check, change or delete the setting.

B. Group

(1) Use

- To register or change the group with a number of addresses to transmit data simultaneously.

(2) Procedure

- Touch [New] to register the new group.
- Select any displayed group to check, edit, or delete the setting.
- At least one address must be registered in order to register the group.

C. E-mail Settings

(1) E-mail Subject

<Use>

- To register the e-mail subject for transmitting the scanned data by e-mail.

<Procedure>

- Touch [New] to register the new subject.
- Select any displayed subject to detail check, edit, or delete the setting.
- The subject can be set as default by selecting the subject displayed on the screen and pressing [Set as Default].

(2) E-mail Body

<Use>

- To register the e-mail message for transmitting the scanned data by e-mail.

<Procedure>

- Touch [New] to register the new message.
- Select any displayed message to detail check or delete the setting.
- The text can be set as default by selecting the text displayed on the screen and pressing [Set as Default].

10.6.22 One-Touch/User Box Registration-Create User Box

- It will not be displayed when the following setting shows that authentication device 1 is mounted.
  [Service Mode] → [Billing Setting] → [Management Function Choice]
- It will not be displayed when both the hard disk and optional fax kit FK-508 are not installed.

A. Public/Personal User Box

(1) Use

- To register or change the box for storing the text data in the hard disk of the machine.
- It will be displayed only when the hard disk is installed.

(2) Procedure

- Touch [New] to register the new box.
- Select any displayed box to edit or delete it.

B. Create User Box-Confidential RX User Box

- It will be displayed only when the hard disk is not installed.

(1) Use

- To register/change the box for confidential RX document.
- If a hard disk is installed, Confidential RX can be enabled when the Confidential RX function is added to the Public/Personal/Group User Box.

(2) Procedure

- A new box can be registered by touching [New].
- Select any displayed box to change or delete it.

C. Bulletin Board User Box

(1) Use

- To register or change the bulletin board user box.

(2) Procedure

- Touch [New] to register the new box.
- Select any displayed box to edit or delete it.

D. Relay User Box

- It will be displayed when the optional fax kit FK-508 is installed.

(1) Use

- To register/change the Relay User Box.

(2) Procedure

- A new box can be registered by touching [New].
- Select any displayed box to change or delete it.

E. Annotation User Box

(1) Use

- To register or change the annotation user box.
- To attach the image of the date, time, and/or filing number to the document data stored in the scanner mode, and to distribute them.

(2) Procedure

- Touch [New] key to register the new box.
- Select any displayed box to change or delete it.

10.6.23 One-Touch/User Box Registration-One-Touch/User Box Registration List

A. Address Book List

(1) Use

- To output the address book list.

(2) Procedure

1. Select the destination type to be output.
2. Touch [Starting destination No.] and enter the number from which output starts.
3. Touch [No. of Destinations] and specify the number of destinations to be output.
4. Touch [Print], and select the paper feed tray.
5. Select the simplex or duplex print, and press the Start key to output the list of abbreviated addresses.

B. Group List

(1) Use

- To output the group list.

(2) Procedure

1. Touch [Starting destination No.] and enter the number from which output starts.
2. Touch [No. of Destinations] and specify the number of destinations to be output.
3. Touch [Print], and select the paper feed tray.
4. Select the simplex or duplex print, and press the Start key to output the list of abbreviated addresses.

C. Program List

(1) Use

- To output the program list.

(2) Procedure

1. Select the destination type to be output.
2. Touch [Starting destination No.] and enter the number from which output starts.
3. Touch [No. of Destinations] and specify the number of destinations to be output.
4. Touch [Print], and select the paper feed tray.
5. Select the simplex or duplex print, and press the Start key to output the list of abbreviated addresses.

D. E-mail Subject/Text List

(1) Use

- To output the subject or the text list.

(2) Procedure

1. Select the paper feed tray.
2. Select the simplex or duplex print, and press the Start key to output the list of abbreviated addresses.

10.6.24 One-Touch/User Box Registration-Maximum Number of User Boxes

A. Use

- Set the maximum of public, personal, and group boxes that individual users can hold.

B. Procedure

1. Select a user box type and name.
2. If a maximum number of user boxes is not specified, set Max. No. of Use Boxes to [OFF].
3. If a maximum number of user boxes is not specified, set Max. No. of Use Boxes to [OFF].

10.6.25 User Authentication/Account Track-General Settings

- It will not be displayed when the following setting shows that key counter or vendor is mounted.
  [Service Mode] → [Billing Setting] → [Management Function Choice]

NOTE

- **Before registering a user, select an authentication method. If all management data is cleared after the authentication method was selected, the histories of the registered users, print, send, receive, and save jobs are deleted.**

A. User Authentication

(1) Use

- To set the user authentication method.
- To select whether to authenticate the user by the external server or MFP.

(2) Procedure

- The default setting is OFF.

"OFF"	ON (External Server)	ON (MFP)

NOTE

- **[OFF] cannot be selected when the following setting is set to "ON."**
  [Administrator Settings] → [Security Setting] → [Enhanced Security Mode]
- **[ON (External Server)] cannot be selected when external servers are not registered in the following setting.**
  [Administrator Settings] → [User Authentication/Account Track] → [External Server Settings]
- **Neither [ON (External Server)] or [ON (MFP)] can be selected when the presence of management device is set in the following setting.**
  [Service Mode] → [Billing Setting] → [Management Function Choice]

B. Public User Access

(1) Use

- To set whether to allow or prohibit the nonregistered user to use the system when User authentication has been set.
- Able to use the machine without authentication by logging in as a public user when [ON (Without Login)] is selected.

(2) Procedure

- The default setting is Restrict.

"Restrict"	ON (With Login)	ON (Without Login)

NOTE

- **This setting is not available without user authentication.**
- **[Allow] cannot be selected when the following setting is set to "ON."**
  [Administrator Settings] → [Security Setting] → [Enhanced Security Mode]
- **[Allow] cannot be selected when [Synchronize User Authentication & Account Track] is set to "Do Not Synchronize."**

C. Account Track

(1) Use

- To set whether to enable the account track function or not.

(2) Procedure

- The default setting is OFF.

"OFF"	ON

D. Account Track Input Method

(1) Use

- To set the authentication method for the account track.
- To select whether to authenticate by password or by account name & password.

(2) Procedure

- The default setting is Account Name & Password.

"Account Name & Password"	Password Only

NOTE

- **This setting is not available without the account track.**
- **"Password Only" cannot be set when using both user authentication and account track.**

E. Synchronize User Authentication & Account Track

(1) Use

- To set whether to synchronize the user authentication and account track.

(2) Procedure

- The default setting is Synchronize.

"Synchronize"	Do not synchronize

NOTE

- **The setting is available only when carrying out the user authentication and account track.**

F. When # of Jobs Reach Maximum

(1) Use

- To set whether to stop the currently printing job and start the next job, or to stop the machine, when reaching to the upper limit for the number of printed pages set by the user authentication and the account track.
- To stop the machine when the number of printed pages reach the upper limit set by the user authentication and the account track.

(2) Procedure

- The default setting is Skip Job.

"Skip Job"	Stop Job

G. Number of User Counters Assigned

- It will not be displayed when the following setting shows that management device 2 is mounted.
  [Service Mode] → [Billing Setting] → [Management Function Choice]

(1) Use

- To set the number available to be assigned for the user registration and account registration.

(2) Procedure

- The default setting is 500.
- The total number to be registered for the user authentication and account track is 1000. The number for the user registration will be set.

* When setting the [# of Counters Assigned for Users] to 50, the number available for Account Track will be 950.

NOTE

- **The setting is available only when carrying out the user authentication and account track.**
- **Up to 99 users can be registered when a hard disk is not installed.**

H. Ticket Hold Time Setting

(1) Use

- Specify the desired length of holding time of Kerberos authentication ticket.

NOTE

- **This setting takes effect only when the authentication server type is set to active directory.**

(2) Procedure

- The default settings is 60 min.

1 to "60 min."

10.6.26 User Authentication/Account Track-User Authentication Setting

- The settings are available only when carrying out the user authentication.

A. Administrative Setting

(1) User Name List

- It cannot select [OFF] when the following setting is set to “ON.”
  [Administrator Settings] → [Security Settings] → [Enhanced Security Mode]

<Use>

- To set whether to display or not the list key for user names on user authentication screen.

<Procedure>

- The default setting is OFF.

ON	“OFF”

NOTE

- **[ON] cannot be selected when [ON] is specified in the following setting.**
  [Administrator Settings] → [Security Settings] → [Enhanced Security Mode]

(2) Default Function Permission

<Use>

- To set the default value for the function permission in user authentication by the external server.
- To set the function which authenticated user can use when initially authenticating the user by the external server.
- Items available for setting: Copy, Scan, Fax, Print, User Box, Print Scan/Fax TX, Save to External Memory, Read the stored document in External Memory, Manual destination input, Cellular Phone/PDA and Web browser

<Procedure>

- The default setting is Allow.

“Allow”	Restrict

(3) ID & Print Settings

<Use>

- To set whether to use ID & Print (a job sent by a user cannot be printed until the user authentication is completed).
- To set whether to print a job of unauthenticated or public user or to save the job into the ID & Print User Box.

<Procedure>

<ID & Print>

- The default setting is OFF.

ON	“OFF”

<Public User>

- The default setting is Print Immediately.

“Print Immediately”	Save

(4) ID & Print Operation Settings

- It will be displayed only when the following setting shows that authentication device is set to “installed”.
  [Service Mode] → [Billing Setting] → [Management Function Choice]

<Use>

- To set whether to print all jobs or only one job from the same authenticated user when ID & Print is selected.

<Procedure>

- The default setting is Print All Jobs.

“Print All Jobs”	Print Each Job

(5) Default Operation Selection

<Use>

- In the Login screen for user authentication where ID and print jobs are stored, specify the default values for the operation to be carried out after authentication has been completed.
  When using this machine while the ID & print function is disabled, the user can select [Access] to log in to this machine without specifying the operation to be carried out after authentication.

<Procedure>

- The default setting is Print.

“Print”	Print & Access Basic Screen	Access Basic Screen

B. User Registration

(1) Use

- To register, change or delete the user for authentication.

(2) Procedure

1. Select the user, and touch [Edit]

2. Input the user name, user password, and e-mail address.

NOTE

- **It cannot be entered when conducting authentication by external server.**

3. Set the output permission, max allowance set, function permission, and touch [OK].

NOTE

- **When the public users are allowed, the output permission and the function permission can be set.**
- **[Authentication Information Registration] does not appear when the presence of Authentication Device 2 is set in the following setting.**
  [Service Mode] → [Billing Setting] → [Management Function Choice]
- **[Output Permission], [Max. Allowance Set], and [Function Permission] do not appear when the presence of Management Device 1 is set in the following setting.**
  [Service Mode] → [Billing Setting] → [Management Function Choice]

C. User Counter

(1) Use

- To display the status of use of the copy+print, copy, print and scan/fax for each user.

(2) Procedure

1. Select the user and touch [Counter Details].
2. Select the key to check to see the status of use.
3. For clearing the counter, touch [Clear Counter].
4. For clearing the all counters, touch [Reset All Counters].

10.6.27 User Authentication/Account Track-Account Track Setting

- The settings are available only when carrying out the account track.

A. Account Track Registration

(1) Use

- To register and change the account.

(2) Procedure

1. Select the proper Account and touch [Edit].
2. Input the [Account Name], [Password] and [Name].
3. Set the [Output Permission], and [Max. Allowance Set], and touch [OK].

NOTE

- **When the "Password Only" is selected for [Account Track Input Method], [Account Name] does not appear.**
- **When the "Account Name & Password" is selected for [Account Track Input Method], [Name] does not appear.**

B. Account Track Counter

(1) Use

- To display the status of use of the copy+print, copy, print and scan/fax for each account.

(2) Procedure

1. Select the account and touch [Counter Details].
2. Select the key for the item to be checked.
3. For clearing the counter, touch [Clear Counter].
4. For clearing the all counters, touch [Reset All Counters].

10.6.28 User Authentication/Account Track-Print without Authentication

- It cannot select [Allow] when the following setting is set to "ON."
  [Administrator Settings] → [Security Settings] → [Enhanced Security Mode]

A. Use

- To set whether to allow or restrict the print which user and account are not specified.
- To allow or restrict printing which user and account are not specified.
- When Allow is selected, pages printed by unidentified users are counted and included in the count of the public user.

B. Procedure

- The default setting is Restrict.

Allow "Restrict"

10.6.29 User Authentication/Account Track-Print Counter List

- The setting is available only when carrying out the user authentication or account track.
- It will not be displayed when the following setting shows that key counter, vendor, authentication device1 or management device 2 is mounted.
  [Service Mode] → [Billing Setting] → [Management Function Choice]

A. Use

- To print out the User counter and the account counter.

B. Procedure

1. Touch [Counter List].
2. Select the paper feed tray.
3. Select the simplex or duplex print, and press the start key to output the counter list.

10.6.30 User Authentication/Account Track-External Server Settings

A. Use

- Registers and sets an external server that is used for user authentication.

B. Procedure

1. Select one from No. 1 to No. 20 and touch [NEW].
2. Set [Server Name] and [Server Type].
3. To change settings, select an external server to be edited and touch [Edit].

<Server Type>

Active Directory NTLM v1 NTLM v2 NDS LDAP

NOTE

- **Neither [NTLM v1] nor [NTLM v2] appear when OFF is selected in the following setting.**
  [Administrator Settings] → [Network Settings] → [SMB Settings] → [User Authentication (NTLM)]
- **[NDS] does not appear when OFF is selected in the following setting.**
  [Administrator Settings] → [Network Settings] → [NetWare Settings] → [User Authentication Setting (NDS)]

10.6.31 User Authentication/Account Track-Limiting Access to Destinations

A. Create Group

(1) Use

- Registers and edits groups of destinations for limiting access.

(2) Procedure

1. Select a group and touch [Edit].
2. Enter [Group Name].
3. Set the Access Allowed Level and touch [OK].

B. Apply Levels/Groups to Destinations

(1) Use

- Sets Apply Level and Apply Group for individual destinations.

(2) Procedure

1. Select one from Address Book, Group, and Program.
2. Select a registered address. Touch [Apply Group] and [Apply Level] independently to make each settings.

C. Apply Levels/Groups to Users

(1) Use

- Sets Apply Level or Apply Group for individual users.

(2) Procedure

1. Select a registered user. Touch [Apply Group] and [Apply Level] independently to make each settings.

10.6.32 User Authentication/Account Track-Authentication Device Settings

- It will be displayed only when the extension server is used for user authentication.
- It will be displayed only when the hard disk is installed.

A. General Settings

(1) Use

- Specifies a device used for user authentication.
  Card Authentication : Select the IC card type and operation settings.
  Bio Authentication : Select the beep and operation settings.

(2) Procedure

Card Authentication Bio Authentication

- Select either one of the authentication devices and press the corresponding key to go to the individual operation setting screen.

- The screen displays the authentication device that is selected in [Service Mode] → [Billing Setting] → [Management Function Choice] → [Authentication Device 2].
  When [Card 1] is selected as the authentication device, select the card type from among [FeliCa], [TypeA], [SSFC], [FCF], and [FCF (Campus)] and make the operation settings.
  If [FeliCa+Type A], [SSFC+Type A], [FCF+Type A], or [FCF (Campus)+Type A] is selected, both the FeliCa and Type A cards can be used in this machine at the same time.
  When [Card 2] is selected as authentication device, the authentication device name will be displayed differently depending on the type of installed loadable device driver.
- If SSFC (Shared Security Formats Cooperation) is selected in Card Authentication, set [Company Code], [Company Identification Code], [Area No.], [Building No.], [Floor No.], [Room No.], and [Security Level].
- If LEGIC (PID) is selected in Card Authentication, perform the access setting (STAMP input) for LEGIC (PID).
- If MIFARE (PID) is selected in Card Authentication, perform the MIFARE key setting.

(3) How to set the card information when using SSFC card.

- When using SSFC card for user authentication, get the following information from the administrator.
  And it is necessary to convert the information into the value for the control panel.

Necessary information			Setting value on the control panel
Item	Sampled-data	Sampled-data (hexadecimal number)	
Room Number	37 (decimal number)	00 25	37 *1
Floor Number	15 (decimal number)	00 0F	15 *1
Building Number	50 (decimal number)	00 32	50 *1
Area Number	85 (decimal number)	00 55	85 *1
Security Level	2 (decimal number)	00 02	2 *1
Company Identification Code (CL Code) *2	06BGLQVX17 (ASCII code)	30 36 42 47 4C 51 56 58 31 37	30 36 42 47 4C 51 56 58 31 37
Company Code *3	CompanyA (ASCII code)	-	CompanyA

*1: Enter the value as a decimal number format.
*2: The character length of the company code is 10 bytes.
*3: Use alphabetical upper case/lower case characters and numeric characters for Company code. When the company code is not set, this space will be left blank.

B. Logoff Settings

(1) Use

- Select whether or not the user is logged off after a scan or fax is sent or after the copy document is scanned.

(2) Procedure

- The default setting is Do not log off.

“Do not log off” Log off

10.6.33 User Authentication/Account Track-Auth/Acct Track Common Setting

A. Logout Confirmation Screen Display Setting

(1) Use

- Select whether or not to display the logout confirmation screen.
- If the setting is made not to display the confirmation screen, the logout sequence is performed only through the access key operation with no confirmation screen appearing.

(2) Procedure

- The default setting is ON.

“ON” OFF

10.6.34 User Authentication/Account Track-Scan to Home Settings

(1) Use

- To set whether or not to enable the Scan to Home function that is used to send scanned data to user's home folder.

(2) Procedure

- The default setting is Disable.

Enable	"Disable"

10.6.35 User Authentication/Account Track-Scan to Authorized Folder Settings

A. Use

- Use to restrict specification of sending destinations by users.
- Enabling this item disables manual entry of destinations except for recipients of faxes or IP address faxes. Therefore users can specify sending destinations only by accessing the address book. Enabling this item also applies the following restrictions.
  - Users cannot save documents to User Boxes
  - Users cannot transmit documents from User Boxes
  - Users cannot use annotation User Boxes
  - Users cannot use the image panel
  - Users cannot select addresses from the transmission history
  - Users cannot use the URL notification function

B. Procedure

- The default setting is Do Not Limit.

Limit	"Do Not Limit"

10.6.36 Network Settings-TCP/IP Settings

A. TCP/IP Settings

(1) Use

- To set whether to enable or disable TCP/IP settings.

(2) Procedure

- The default setting is ON.

"ON"	OFF

NOTE

- **When the setting is changed, turn off the main power switch and turn it on again more than 10 seconds after.**

B. IPv4 Settings

(1) Use

- To set whether to enter the IP address (IPv4) directly or to obtain it automatically.

(2) Procedure

- The default setting is Auto Input.

Manual Input	“Auto Input”

- When it is set to [Auto Input], select the method to obtain it automatically.

DHCP Setting	:	ON	OFF
BOOTP Setting	:	ON	OFF
ARP/PING Setting	:	ON	OFF
AUTO IP Setting	:	ON	OFF

NOTE

- **[ARP/PING Setting] and [Auto IP Setting] cannot be set to “OFF” simultaneously.**
- **They will all be set to “ON” when [Manual Input] is changed to [Auto Input].**

- When it is set to [Manual Input], set the IP address, subnet mask and default gate way.

C. IPv6 Settings

(1) Use

- To set whether or not to use IP address (IPv6).
- To set whether to enter the IP address (IPv6) directly or to obtain it automatically.

(2) Procedure

- The default setting is ON.

“ON”	OFF

<Auto IPv6 Setting>

- To set whether or not to automatically obtain IP address (IPv6).
  When selecting [OFF], set a global address or gateway address.
- The default setting is ON.

“ON”	OFF

<DHCPv6 Setting>

- The default setting is ON.

“ON”	OFF

D. DNS Host

(1) Use

- To set the DNS host name.
- To set whether or not to enable the dynamic DNS setting.

(2) Procedure

<DNS Host Name>

1. Touch [DNS Host Name].
2. Enter the DNS host name on the screen key board, and touch [OK].

<Dynamic DNS Settings>

- The default setting is No Limit.

Enable	“No Limit”

E. DNS Domain

(1) Use

- To set whether or not to enable the auto obtaining for the DNS domain name.
- To set the DNS default domain name.
- To set the DNS search domain name.

(2) Procedure

<DNS Domain Name Auto Retrieval>

- The default setting is Enable.

"Enable"	No Limit

NOTE

- **"Enable" cannot be set when [IP Settings] is set to "Auto Input."**

<Search Domain Name Auto Retrieval>

- The default setting is Enable.

"Enable"	No Limit

- Touch [Default DNS Domain Name] or [DNS Search Domain Name 1 to 3], and enter the domain name using the keyboard on the screen and touch [OK].

F. DNS Server Settings (IPv4)

(1) Use

- To set whether or not to enable the auto obtaining of the DNS server address.
- To set the priority/substitute DNS server address.

(2) Procedure

<DNS Server Auto Obtain>

- The default setting is Enable.

"Enable"	No Limit

NOTE

- **"Enable" cannot be set when [IP Settings] is set to "Auto Input."**

<Priority/secondary DNS server.>

- Touch the corresponding key, and input the server address.

G. DNS Server Settings (IPv6)

(1) Use

- To set whether or not to enable the auto obtaining of the DNS server address.
- To set the priority/substitute DNS server address.

(2) Procedure

<DNS Server Auto Obtain>

- The default setting is Enable.

"Enable"	No Limit

NOTE

- **"Enable" cannot be set when [IP Settings] is set to "Auto Input."**

<Priority/secondary DNS server.>

- Touch the corresponding key, and input the server address.

H. IPsec Settings

(1) Use

- To set whether to use IPsec protocol for IP network communication.

(2) Procedure

- The default setting is OFF.

ON "OFF"

- When selecting [ON], make settings in [IKE Setting], [IPSec SA Setting], and [Peer].

I. IPsec Settings-IKE Settings

(1) Use

- To make the settings that relate to IKE (Internet Key Exchange) protocol which is used for IPsec communication.
- Settings can be made independently for four different sets (Group 1 to 4).

(2) Procedure

<Group>

- Among four groups (Group 1 to 4), select a group where settings are made.

<Encryption Algorithm>

- Set a encryption algorithm used for IPsec communication.
- The default setting is OFF.

DES_CBC 3DES_CBC "OFF"

<Authentication Algorithm>

- Set an authentication algorithm used for IPsec communication.
- The default setting is OFF.

MD5 SHA-1 "OFF"

<Key Validity Period>

- Set a key validity period.
- The default setting is 28800 (sec.).

80 to 604800 (sec.)

<Diffie-Hellman Group>

- Set Diffie-Hellman group.
- The default setting is Group 2.

J. IPsec Settings-IPsec SA Settings

(1) Use

- To make the settings that relate to IPsec SA (Security Association) which is used for IPsec communication.
- Settings can be made independently for eight different sets (Group 1 to 8).

(2) Procedure

<Group Set Number>

- Among Group 1 to 8, select a group where settings are made.
- After touching the key of the Group, make the following settings.
  (If the combination of each selection is not allowed among different settings, the key operation of the corresponding option is locked.)

<Security Protocol>

- Set a security protocol.
- The default setting is OFF.

AH ESP ESP_AH “OFF”

<ESP Encryption Algorithm>

- Set an encryption algorithm used for ESP protocol.
- The default setting is OFF.

DES_CBC 3DES_CBC AES_CBC AES_CTR NULL “OFF”

<ESP Authentication Algorithm>

- Set authentication algorithm used for ESP protocol.
- The default setting is OFF.

MD5 SHA-1 “OFF”

<AH Authentication Algorithm>

- Set authentication algorithm used for AH protocol.
- The default setting is OFF.

MD5 SHA-1 “OFF”

<Lifetime After Establishing SA>

- Set the period of time starting from when SA connection is established and ending when the SA connection is cut.
- The default setting is 3600 (sec.).

120 to 604800 (sec.)

K. IPsec Settings-Peer

(1) Use

- To register destinations used for IPsec communication.
- Settings can be made independently for different ten sets (Group 1 to 10).

(2) Procedure

<Peer>

- Among Group 1 to 10, select a group where settings are made.
- After touching the key of the Group, make the following setting.

<Encapsulation Mode>

- Set a encapsulation mode used for IPsec.
- The default setting is OFF.

Tunnel Mode	Transport Mode	“OFF”

<IP Address>

- When the encapsulation mode is set, specify the IP address of destinations.
- Touch [IP Address] and enter the IP address with IPv4 or IPv6 format.

<Pre-Shared Key Text>

- When the encapsulation mode is set, specify a Pre-shared key (Key data).
- Touch [Input] and enter the Pre-shared key.

<Perfect Forward Secrecy>

- When the transport mode is selected, set whether to use Perfect forward secrecy.
- The default setting is OFF.

ON	“OFF”

L. IP Filtering (Permit Access)

(1) Use

- To set the IP filtering (Permit Access).
- To set whether to allow only IP addresses that are within a specified range.

(2) Procedure

1. Select Enable or “Disable”.
2. When [Enable] is set, select one from Set 1 to Set 5 and specify the range of IP addresses to be allowed using the 10-key pad.
3. Touch [OK].

M. IP Filtering (Deny Access)

(1) Use

- To set the IP filtering (Deny Access).
- When [Enable] is set, select one from Set 1 to Set 5 and specify the range of IP addresses to be allowed using the 10-key pad.

(2) Procedure

1. Select Enable or “Disable”.
2. When [Enable] is set, select one from Set 1 to Set 5 and enter the range of IP addresses to be denied using the 10-key pad.
3. Touch [OK].

N. RAW Port Number

(1) Use

- To set the RAW port number.
- Several data can be accepted at the same time by selecting several ports.

(2) Procedure

1. Select the necessary port number.
2. When using the selected port, press the Clear key to clear the value, and enter the RAW port number using the 10-key pad.
3. Touch [OK].

O. LLMNR Setting

(1) Use

- To set whether or not to enable LLMNR (Linklocal Multicast Name Resolution) setting.
- To perform the name resolution to send data to a computer with Windows Vista/Server 2008 installed, select [Enable].
  To perform the name resolution especially in the IPv6-only communication environment, enable this setting.

(2) Procedure

- The default setting is Enable.

“Enable”	No Limit

10.6.37 Network Setting-NetWare Settings

A. IPX Settings

(1) Use

- To enable or disable the NetWare (IPX) setting.
- To set the ethernet frame type.

(2) Procedure

<IPX Settings>

- The default setting is ON.

“ON”	OFF

<Ethernet Frame Type>

- The default setting is Auto Detect.

“Auto Detect”	802.2	802.3	Ethernet II	802.3SNAP

B. NetWare Print Settings

(1) Use

- To set whether to use the NetWare print mode.
- To set the NetWare print mode.
- To display NetWare status.

(2) Procedure

<NetWare Print Settings>

- The default setting is OFF.

ON	“OFF”

<NetWare Print Mode>

- The default setting is PServer.

“PServer”	Nprinter/Rprinter

- After selecting either key in the NetWare print mode setting, proceed to each setting screen.

<Status>

1. Touch [Status].
2. Touch up/down arrow keys to select the server to check.
3. Check the NetWare status.

C. P Server Settings: Print Server Name/Print Server Password

(1) Use

- To set the print server name and print server password.

(2) Procedure

1. Touch [Print Server name] or [Print Server Password].
2. Enter the print server name or the print server password (up to 63 characters) using the on-screen keyboard, and touch [OK].

D. P Server Settings: Polling Interval

(1) Use

- To set the polling interval.
- To set the interval to search the print queue.

(2) Procedure

1. Press the Clear key.
2. Enter the polling interval between 1 and 65535 using the 10-key pad.

E. P Server Settings: NDS/Bindery Setting

(1) Use

- To set whether to enable or disable the bindery setting when using NetWare4.x model and after.
- To enable the bindery service.

(2) Procedure

- The default setting is NDS.

“NDS”	NDS/Bindery

F. P Server Settings: File Server Name

(1) Use

- To set the full server name for the print server to logon.

(2) Procedure

1. Touch [File Server Name].
2. Enter the File server name (up to 47 characters) on the on-screen keyboard, and touch [OK].

G. P Server Settings: NDS Context Name

(1) Use

- To set the NDS context name (context name to register NDS print server).

(2) Procedure

1. Touch [NDS Context name].
2. Enter the NDS context name (up to 191 characters) on the on-screen keyboard, and touch [OK].

H. P Server Settings: NDS Tree Name

(1) Use

- To set the NDS tree name (name to login).

(2) Procedure

1. Touch [NDS Tree Name].
2. Enter the NDS tree name (up to 63 characters) on the on-screen keyboard, and touch [OK].

I. Nprinter/Rprinter Settings: Print Server Name

(1) Use

- To set the print server name.

(2) Procedure

1. Touch [Print Server Name].
2. Enter the printer name (up to 63 characters) on the on-screen keyboard, and touch [OK].

J. Nprinter/Rprinter Settings: Printer Number

(1) Use

- To set the printer number.

(2) Procedure

1. Touch [Auto] and cancel the reverse display.
2. Press the Clear key.
3. Enter the number between 0 and 254 using the 10-key pad.

K. User Authentication Setting (NDS)

(1) Use

- To set whether or not to use the user authentication setting.
- To conduct user authentication in netware environment.

(2) Procedure

- The default setting is ON.

"ON"	OFF

10.6.38 Network Settings-http Server Settings

- It will not be displayed when the following setting shows that authentication device is mounted.
  [Service Mode] → [Billing Setting] → [Management Function Choice]

A. http Server Settings

(1) Use

- To set whether or not to use the http server setting.

(2) Procedure

- The default setting is ON.

"ON"	OFF

B. PSWC Settings

(1) Use

- To set whether to use the PageScope Web Connection.

(2) Procedure

- The default setting is ON.

"ON"	OFF

C. IPP Settings

(1) Use

- To set whether to enable or disable IPP (Internet Printing Protocol) setting.

(2) Procedure

- The default setting is ON.

"ON"	OFF

D. Accept IPP jobs

(1) Use

- To set whether to allow or restrict the IPP job.

(2) Procedure

- The default setting is ON.

"ON"	OFF

E. Support Information

(1) Use

- To set the operation support information.
- For the response setting to see if IPP transmission supports each function.

(2) Procedure

1. Touch [Support Information].
2. Set "ON" or OFF for each item.

F. Printer Information

(1) Use

- To set the printer information.

(2) Procedure

1. Touch [Printer Information].
2. Enter the printer name, printer location, and printer information on the on-screen keyboard.
3. Touch [Print URI] to check the printer URI information.

G. IPP Authentication Settings

(1) Use

- To set whether or not to use the IPP authentication setting.

(2) Procedure

- The default setting is ON.

"ON"	OFF

H. Authentication Method

(1) Use

- To set the authentication method for IPP authentication.

(2) Procedure

- The default setting is requesting-user-name.

"requesting-user-name"	basic	digest

I. User Name

(1) Use

- To set the User name for IPP authentication.

(2) Procedure

1. Touch [User Name].
2. Enter the user name on the on-screen keyboard, and touch [OK].

J. Password

(1) Use

- To set the password for IPP authentication.

(2) Procedure

1. Touch [Password].
2. Enter the password on the on-screen keyboard, and touch [OK].

K. realm

(1) Use

- To set the realm for identifying the authentication setting for IPP authentication.

(2) Procedure

1. Touch [realm].
2. Enter the realm on the on-screen keyboard, and touch [OK].

10.6.39 Network Settings-FTP Settings

A. FTP TX Settings

(1) Use

- To set whether to use FTP TX settings.

(2) Procedure

- The default setting is ON.

"ON"	OFF

B. FTP TX Settings: Proxy Server Address

(1) Use

- To set the proxy server address.

(2) Procedure

1. Touch [Host Address].
2. Select [Input Host Name], [IPv4 Address Input], or [IPv6 Address Input] and enter a host address.

C. FTP TX Settings: Proxy Server Port Number

(1) Use

- To set the proxy server port number.

(2) Procedure

- Press the Clear key.
- Enter the proxy server port number between 1 and 65535 using the 10-key pad.

D. FTP TX Settings: Port No.

(1) Use

- To set the port number to be used for transmission with FTP server.

(2) Procedure

1. Touch [Input].
2. Press the Clear key.
3. Enter the proxy server port number between 1 and 65535 using the 10-Kay pad.

E. FTP TX Settings: Connection Timeout

(1) Use

- To set the timeout period for connecting to FTP server.

(2) Procedure

1. Touch [Input].
2. Press the Clear key.
3. Enter the connecting timeout period between 5 and 300 using the 10-key pad.

F. FTP Server Settings

(1) Use

- To set whether to use this machine as FTP server.

(2) Procedure

- The default setting is ON.

"ON"	OFF

NOTE

- **[ON] cannot be selected when the following setting is set to "ON."**
  [Administrator Settings] → [Security Settings] → [Enhanced Security Mode]

10.6.40 Network Settings-SMB Setting

- It will not be displayed when the following setting shows that authentication device is mounted.
  [Service Mode] → [Billing Setting] → [Management Function Choice]

A. Client Settings

(1) Use

- To set whether or not to use the SMB transmission setting.
- To set whether or not to enable the user authentication setting by NTLM.
- To set the NTLM version for the user authentication.
  NTLM has v1 and v2. Select the version which suits the network environment.

(2) Procedure

<Client Settings>

- The default setting is ON.

"ON"	OFF

<NTLM Settings>

- The default setting is v1.

"v1"	v2	v1/v2

<User Authentication (NTLM)>

- The default setting is ON.

"ON"	OFF

<DFS Setting>

- Select [ON] when using SMB transmission under an environment that uses a distributed file system (DFS).
- The default setting is Enable.

"Enable"	Invalid

B. Print Settings

(1) Use

- To set whether to use SMB port or not in printer mode.

(2) Procedure

- The default setting is ON.

"ON"	OFF

C. Print Settings: NetBIOS Name

(1) Use

- To set NetBIOS name.

(2) Procedure

1. Touch [NetBIOS Name].
2. Enter the NetBIOS name (up to 15 characters) on the on-screen keyboard, and touch [OK].

D. Print Settings: Print Service Name

(1) Use

- To set the print service name.

(2) Procedure

1. Touch [Print Service Name].
2. Enter the print service name (up to 13 characters) on the on-screen keyboard, and touch [OK].

E. Print Settings: Workgroup

(1) Use

- To set the workgroup.

(2) Procedure

1. Touch [Workgroup].
2. Enter the workgroup (up to 15 characters) on the on-screen keyboard, and touch [OK].

F. WINS Settings

(1) Use

- To set whether or not to enable the WINS setting.
- To use the WINS (Windows Internet Name Service) setting is necessary.
- By using the WINS, the traffic by broadcast can be reduced, and the communication becomes available with the network where broadcast does not reach.

(2) Procedure

- The default setting is ON.

"ON"	OFF

G. WINS Settings: Automatic Retrieval Settings

(1) Use

- To set whether or not to enable the auto obtaining of the WINS server address.
- To acquire the WINS server address automatically.
- To obtain the WINS server address from DHCP server. If there are more than on address settings, up to two can be acquired.

(2) Procedure

- The default setting is Enable.

"Enable"	No Limit

H. WINS Settings: WINS Server Address 1, 2

(1) Use

- To set the WINS server address.
- To use when manually entering the WINS server address.
- The primary address and the secondary address can be set.
  (The primary address has the priority during operation.)

(2) Procedure

- Touch [1] or [2].
- Enter the WINS server address.

I. WINS Settings: Node Type Setting

(1) Use

- To set a node type.

(2) Procedure

- The default setting is H Node.

B Node	P Node	N Node	"H Node"

J. Direct Hosting Setting

(1) Use

- To set whether or not to enable the direct hosting setting.

(2) Procedure

- The default setting is ON.

"ON"	OFF

10.6.41 Network Settings-LDAP Settings

- It will not be displayed when the following setting shows that authentication device is mounted.
  [Service Mode] → [Billing Setting] → [Management Function Choice]

A. Enabling LDAP

(1) Use

- To set whether to enable or disable the LDAP function.

(2) Procedure

- The default setting is OFF.

ON	"OFF"

B. Setting Up LDAP

- Registration and/or setting concerning the LDAP server can be conducted.
- Touch [Setting Up LDAP], and select the optional blank key to register and/or set.

(1) LDAP Server Name

<Use>

- Set the LDAP server name.

<Procedure>

1. Touch [Server Name].
2. Enter the server name (up to 32 one-byte characters) on the on-screen keyboard, and touch [OK].

(2) Max. Search Results

<Use>

- To set the Max. results of address for LDAP search.

<Procedure>

1. Touch [Max. Search Results].
2. Press the Clear key.
3. Enter the Max. Search result numbers between 5 and 1000 using the 10-key pad.

(3) Timeout

<Use>

- To set the timeout period for LDAP search.

<Procedure>

1. Touch [Timeout].
2. Press the Clear key.
3. Enter the timeout period between 5 and 300 using the 10-key pad.

(4) Initial Setting for Search Details

<Use>

- To set the initial items for search conditions in LDAP detail search.

<Procedure>

1. Touch [Initial Setting for Search Details].
2. Touch the key about condition for each search item, and select the condition.
3. Touch [OK].

(5) Check Connection

- It will not be displayed when [Enabling LDAP] is set to “OFF.”
- It will not be displayed when the following is set to “Restrict.”
  [Administrator Settings] → [Security Settings] → [Security Details] → [Manual Destination Input]

<Use>

- To check the connection with the LDAP server which has been set.

<Procedure>

1. Touch [Check Connection].
2. Confirm a proper connection and touch [Close].

(6) Reset All Settings

<Use>

- To return the contents registered in the LDAP server to what they were prior to the shipping.

<Procedure>

1. Touch [Reset All Settings].
2. Check the message and touch [Yes].
3. Touch [OK].

(7) Server Address

<Use>

- To set the LDAP server address.

<Procedure>

1. Touch [Server Address].
2. Select [Input Host Name], [IPv4 Address Input] or [IPv6 Address Input], and enter the server address.

(8) Search Base

<Use>

- To set the directory path for LDAP server.

<Procedure>

1. Touch [Search Base].
2. Enter the search base (up to 255 characters) on the on-screen keyboard, and touch [OK].

(9) SSL Setting

<Use>

- To set whether to use SSL (data encryption) for connecting to LDAP server.

<Procedure>

- The default setting is OFF.

ON “OFF”

(10) Port Number

<Use>

- To set the LDAP server port number.

<Procedure>

1. Touch [Input].
2. Press the Clear key.
3. Enter the port number between 1 and 65535 using the 10-Kay pad.

(11) Port Number (SSL)

<Use>

- To set the port number for LDAP server when using SSL.

<Procedure>

1. Touch [Input].
2. Press the Clear key.
3. Enter the port number between 1 and 65535 using the 10-Kay pad.

(12) Certificate Verification Level Settings

<Use>

- To verify the server certificate, configure settings to verify the certificate.

<Procedure>

Expiration Date	: Select whether to check that the server certificate is within the validity period.
Key Usage	: Select whether to check that the server certificate is used according to the purpose approved by the issuer.
Chain	: Select whether to check that the server certificate chain (certification path) is correct. The chain is validated by referencing the external certificates managed on this machine.
Expiration Date Confirmation	: Select whether to check that the server certificate is within the validity period. The OCSP service and CRL (Certificate Revocation List) are checked in this order when the expiration date of the certificate is checked.
CN	: Select whether to check that the CN of the server certificate matches the server address.

(13) Authentication Type

<Use>

- To set the authentication method to logon to LDAP server.

Anonymous	: User name and password are not necessary (Dynamic authentication will be invalid when anonymous is selected.)
Simple	: Simple method which needs the user name and the password
Digest-MD5	: Method available with normal LDAP server. When failing to authenticate with Digest-MD5, it automatically switches to CRAM-MD5.
GSS-SPNEGO	: Method available with Windows active directory (Kerberos authentication).
NTLM (v1)	: Standard user authentication format used for Windows NT, etc.
NTLM (v2)	: Standard user authentication format used for Windows NT, etc. It has been applied to the Windows NT4.0 SP4 and later versions. Its security has been enhanced compared to v1.

<Procedure>

- The default setting is Anonymous.

“Anonymous” Simple Digest-MD5 GSS-SPNEGO NTLM v1 NTLM v2

(14) Select Server Authentication Method

<Use>

- To set the authentication system when conducting LDAP server authentication.
- To use when changing the server authentication system.

Use Set Value : It conducts authentication with the setting value set by [LDAP Server Registration].

Use User Authentication ID and Password : It conducts authentication with the registration data for the copier's user authentication.

Dynamic Authentication : It conducts authentication by dynamic authentication.

<Procedure>

- The default setting is Set Value.

"Set Value"	User Authentication	Dynamic Authentication

(15) Referral Setting

<Use>

- To set whether or not to use the referral setting.
- To use when tracing the server with referral at the time of LDAP connection.

<Procedure>

- The default setting is ON.

"ON"	OFF

(16) Login Name

<Use>

- To set the login name to connect to LDAP server.

<Procedure>

1. Touch [Login Name].
2. Enter the logon name (up to 255 characters) on the on-screen keyboard, and touch [OK].

NOTE

- **The setting is not available when authentication method is set to anonymous.**

(17) Password

<Use>

- To set the password for connecting to LDAP server.

<Procedure>

1. Touch [Password].
2. Enter the password (up to 128 characters) on the on-screen keyboard, and touch [OK].

NOTE

- **The setting is not available when authentication method is set to anonymous.**

(18) Domain Name

<Use>

- To set the domain name for connecting to LDAP server.

<Procedure>

1. Touch [Domain Name].
2. Enter the domain name (up to 64 characters) on the on-screen keyboard, and touch [OK].

C. Default LDAP Server Setting

(1) Use

- To set the server to be used as the default when searching LDAP.

(2) Procedure

1. Touch [Default LDAP Server Setting].
2. Select the optional server.

10.6.42 Network Settings-E-mail Settings

- It will not be displayed when the following setting shows that authentication device is mounted.
  [Service Mode] → [Billing Setting] → [Management Function Choice]

A. E-mail TX (SMTP)

(1) E-mail TX (SMTP)

<Use>

- To set whether to enable or disable the e-mail transmission setting.

<Procedure>

- The default setting is ON.

"ON"	OFF

(2) Scan to E-mail

<Use>

- To set whether or not to transfer scanned data by e-mail.

<Procedure>

- The default setting is ON.

"ON"	OFF

(3) Status Notification

<Use>

- To set whether or not to inform the status by e-mail.

<Procedure>

- The default setting is ON.

"ON"	OFF

(4) Total Counter Notification

<Use>

- To set whether or not to inform the total counter by e-mail.

<Procedure>

- The default setting is ON.

"ON"	OFF

(5) SMTP Server Address

<Use>

- To set the SMTP server address.

<Procedure>

1. Touch [Host Address].
2. Select [Input Host Name], [IPv4 Address Input] or [IPv6 Address Input], and enter the server address.

(6) Binary Division

<Use>

- To set whether to carry out binary division for data to be transmitted.

<Procedure>

- The default setting is OFF.

ON	"OFF"

(7) Divided Mail Size

<Use>

- To set the dividing size when carrying out the binary division for data to be transmitted.
- To change the dividing size of the data.

<Procedure>

1. Press the Clear key.
2. Enter the dividing mail size between 100 and 15000 (in 100 increments) using the 10-key pad.

(8) Connection Timeout

<Use>

- To set the timeout period for connection in transmitting e-mail to SMTP server.

<Procedure>

- Select the timeout period using [+] / [-] keys.
- The default setting is 60 sec.

"60 sec." (30 to 300, in 30 sec. increments)

(9) Server Capacity

<Use>

- To set the Max. capacity per mail which SMTP server can receive.

<Procedure>

- The default setting is No Limit.

"No Limit" (1 to 100)

(10) SSL/TLS Setting

<Use>

- To set whether or not to use SSL/TLS when sending an e-mail.

<Procedure>

- The default setting is OFF.

SMTP over SSL	Start TLS	"OFF"

(11) Port No.

<Use>

- To set the port number for transmission with SMTP server.

<Procedure>

1. Touch [Input].
2. Press the Clear key.
3. Enter the port number between 1 and 65535 using the 10-key pad.

(12) Port Number (SSL)

<Use>

- To set the port number when using SSL.

<Procedure>

1. Touch [Input].
2. Touch the Clear key.
3. Enter the port number (SSL) between 1 and 65535 using the 10-key pad.

(13) Certificate Verification Level Settings

<Use>

- To verify the server certificate, configure settings to verify the certificate.

<Procedure>

Expiration Date	: Select whether to check that the server certificate is within the validity period.
Key Usage	: Select whether to check that the server certificate is used according to the purpose approved by the issuer.
Chain	: Select whether to check that the server certificate chain (certification path) is correct. The chain is validated by referencing the external certificates managed on this machine.
Expiration Date Confirmation	: Select whether to check that the server certificate is within the validity period. The OCSP service and CRL (Certificate Revocation List) are checked in this order when the expiration date of the certificate is checked.
CN	: Select whether to check that the CN of the server certificate matches the server address.

(14) Detail Settings: SMTP Authentication

<Use>

- To set whether or not to enable SMTP authentication.

<Procedure>

- The default setting is OFF.

ON "OFF"

- When set to "ON", enter the [User ID], [Password] and [Domain Name].

(15) Detail Settings: POP Before SMTP Authentication

<Use>

- To set whether or not to enable the POP Before SMTP authentication.

<Procedure>

- The default setting is OFF.

ON "OFF"

(16) Detail Settings: POP Before SMTP Time

<Use>

- To set the time necessary for POP Before SMTP authentication.

<Procedure>

1. Touch [Input].
2. Press the Clear key.
3. Enter the time for POP Before SMTP between 0 and 60 using the 10-key pad.

B. E-mail RX (POP)

(1) E-mail RX (POP)

<Use>

- To set whether to enable or disable the e-mail reception setting.

<Procedure>

- The default setting is ON.

"ON" OFF

(2) POP Server Address

<Use>

- To set the POP server address.

<Procedure>

1. Touch [Host Address].
2. Select [Input Host Name], [IPv4 Address Input] or [IPv6 Address Input], and enter the server address.

(3) Connection Timeout

<Use>

- To set the timeout period for connection in receiving e-mail to POP server.

<Procedure>

- Select the timeout period of connection using [-]/[+] keys.

(4) SSL Setting

<Use>

- To set whether or not to use SSL when receiving an e-mail.

<Procedure>

- The default setting is OFF.

ON "OFF"

(5) Port No.

<Use>

- To set the port No. for transmitting with POP server.

<Procedure>

1. Touch [Input].
2. Touch the Clear key.
3. Enter the port No. between 1 and 65535 using the 10-key pad.

(6) Port Number (SSL)

<Use>

- To set the port number when using SSL.

<Procedure>

1. Touch [Input].
2. Touch the Clear key.
3. Enter the port number (SSL) between 1 and 65535 using the 10-key pad.

(7) Certificate Verification Level Settings

<Use>

- To verify the server certificate, configure settings to verify the certificate.

<Procedure>

Expiration Date	: Select whether to check that the server certificate is within the validity period.
Key Usage	: Select whether to check that the server certificate is used according to the purpose approved by the issuer.
Chain	: Select whether to check that the server certificate chain (certification path) is correct. The chain is validated by referencing the external certificates managed on this machine.
Expiration Date Confirmation	: Select whether to check that the server certificate is within the validity period. The OCSP service and CRL (Certificate Revocation List) are checked in this order when the expiration date of the certificate is checked.
CN	: Select whether to check that the CN of the server certificate matches the server address.

(8) Login Name

<Use>

- To enter a login name used for POP server authentication.

<Procedure>

1. Touch [Login Name].
2. Enter a login name.

(9) Password

<Use>

- To enter a login name used for POP server authentication.

<Procedure>

1. Touch [Password].
2. Enter a password.

(10) APOP Authentication

<Use>

- To set whether to use APOP authentication.

<Procedure>

- The default setting is OFF.

ON “OFF”

(11) Check for New Messages

- It will not be displayed when either [Internet Fax] is set to “OFF” in the following settings. [Administrator Settings] → [Network Setting] → [Network Fax Setting] → [Network Fax Function Settings]

<Use>

- To set whether to automatically check a POP server for new messages.

<Procedure>

- The default setting is Yes.

“Yes” No

(12) Polling Interval

- It will not be displayed when either [Internet Fax] is set to “OFF” in the following settings. [Administrator Settings] → [Network Setting] → [Network Fax Setting] → [Network Fax Function Settings]

<Use>

- To set a polling interval at which a POP server is checked for new messages.

<Procedure>

- The default setting is 15 minutes.

1 to 60 minutes

C. S/MIME Communication Settings

(1) Use

- To set whether to activate S/MINE communication that provides encrypted E-mail transmission.

(2) Procedure

- The default setting is OFF.

ON "OFF"

D. S/MIME Communication Settings-Digital Signature

(1) Use

- Set whether to add a digital signature to S/MIME messages.

(2) Procedure

- The default setting is Do not add signature.

"Do not add signature" Always add signature Select when sending

E. S/MIME Communication Settings-E-mail Text Encryption Method

(1) Use

- To select an encryption method used for S/MIME E-mail text.

(2) Procedure

- The default setting is 3DES.

RC2-40 RC2-64 RC2-128 DES "3DES" AES-128 AES-192 AES-256

F. S/MIME Communication Settings-Print S/MIME Information

(1) Use

- To select whether to print S/MIME information when sending and receiving E-mail.

(2) Procedure

- The default setting is No.

Yes "No"

G. S/MIME Communication Settings-Automatically Obtain Certificates

(1) Use

- To set whether to automatically acquire a certificate when sending or receiving E-mail.

(2) Procedure

- The default setting is No.

Yes "No"

H. S/MIME Communication Settings-Certificate Verification Level Settings

(1) Use

- To verify the server certificate, configure settings to verify the certificate.

(2) Procedure

Expiration Date	: Select whether to check that the server certificate is within the validity period.
Key Usage	: Select whether to check that the server certificate is used according to the purpose approved by the issuer.
Chain	: Select whether to check that the server certificate chain (certification path) is correct. The chain is validated by referencing the external certificates managed on this machine.
Expiration Date Confirmation	: Select whether to check that the server certificate is within the validity period. The OCSP service and CRL (Certificate Revocation List) are checked in this order when the expiration date of the certificate is checked.

10.6.43 Network Settings-SNMP Setting

A. SNMP Setting

(1) Use

- To set whether to use SNMP (Simple Network Management Protocol) or not.
- To set the SNMP version to be used.
- To readout management information base and to enter community name for writing.

(2) Procedure

- The default setting is ON.

"ON" OFF

- To individually set whether or not to use SNMP v1/v2c (IP), SNMP v3 (IP), and SNMP v1 (IPX).
- The default setting is ON.

"ON" OFF

B. UDP Port Number

(1) Use

- To set the UDP standby port number which is used for SNMP (IP).

(2) Procedure

1. Touch the Clear key.
2. Enter the port number between 1 and 65535 using the 10-key pad.

C. SNMP v1/v2c Settings

(1) Use

- To conduct setting when using SNMP v1/v2c.
- To use when entering the community name for reading the Management Information Base (MIB) and writing to it.

(2) Procedure

<Read Community Name Settings>

- Enter a read community name.

<Write Setting>

- The default setting is Enable.

"Enable"	Disable

NOTE

- **[Enable] cannot be selected when the following setting is set to "ON."**
  [Administrator Settings] → [Security Setting] → [Enhanced Security Mode]

<Write Community Name Settings>

- Enter a write community name.

D. SNMP v3 Settings

(1) Context Name Settings

<Use>

- Set the context name which is used for SNMP v3.

<Procedure>

1. Touch [Name].
2. Enter the context name (up to 64 characters) on the on-screen key board, and touch [OK].

(2) Discovery User Permissions

<Use>

- To set whether or not to enable the discovery authority user which is used for SNMP v3.

<Procedure>

- The default setting is ON.

"ON"	OFF

(3) Discovery User Name Settings

<Use>

- To set the name of the discovery authority users which is used for SNMP v3.

<Procedure>

1. Touch [Discovery User Name].
2. Enter the discovery user name (up to 32 characters) on the on-screen keyboard, and touch [OK].

NOTE

- **The user name same with the read user name or the write user name cannot be set.**

(4) Read User Name Settings

<Use>

- To set the read-only user name used for SNMP v3.

<Procedure>

1. Touch [Read User Name].
2. Enter the read user name (up to 32 characters) on the on-screen keyboard, and touch [OK].

NOTE

- **The user Name same with the discovery user name cannot be used.**

(5) Security Level

<Use>

- To set the security level of the read-only user used for SNMP v3.

  OFF : No authentication will be conducted when the read-only user accesses.

  auth-password : Conducts authentication only for the authentication password when the read-only user accesses.

  auth-password/priv-password : Conducts authentication by authentication password and privacy password when read-only user accesses.

<Procedure>

- The default setting is auth-password/priv-password.

OFF	auth-password	“auth-password/priv-password”

(6) Password Setting

<Use>

- To set the authentication password for the read-only user which is used for SNMP v3.

<Procedure>

1. Select a type of password.
2. Enter the password (up to 32 characters) on the on-screen keyboard, and touch [OK].

(7) Write User Name Settings

<Use>

- To set the name of the reading/writing authority user which is used for SNMP v3.

<Procedure>

1. Touch [Write User Name].
2. Enter the write user name (up to 32 characters) on the on-screen keyboard, and touch [OK].

NOTE

- **The user name same with the discovery use name cannot be used.**

(8) Security Level

<Use>

- To set the security level for the reading/writing authority user which is used for SNMP v3.

  OFF : Authentication will not be conducted when reading/writing authority user accesses.

  auth-password : Conducts authentication only with authentication password when reading/writing authority user accesses.

  auth-password/priv-password : Conducts authentication by authentication password and privacy password when reading/writing authority user accesses.

<Procedure>

- The default setting is auth-password/priv-password.

OFF	auth-password	“auth-password/priv-password”

NOTE

- **[Authentication OFF] cannot be selected when the following setting is set to “ON.”**
  [Administrator Settings] → [Security Settings] → [Enhanced Security Mode]

(9) Encryption Algorithm

<Use>

- To set the encryption algorithm in SNMPv3 communication.

<Procedure>

- The default setting is DES.

“DES”	AES-128

(10) Authentication Algorithm

<Use>

- To set the authentication algorithm in SNMPv3 communication.

<Procedure>

- The default setting is MD5.

“MD5”	SHA-1

E. TRAP Setting

(1) Use

- To set whether or not to allow the TRAP function.

(2) Procedure

- The default setting is Allow.

“Allow”	Restrict

F. TRAP Setting When Authentication failed

(1) Use

- To set whether or not to enable the TRAP function when authentication failed.

(2) Procedure

- The default setting is Invalid.

Enable	“Invalid”

10.6.44 Network Settings-AppleTalk Settings

- It will not be displayed when the following setting shows that authentication device is mounted.
  [Service Mode] → [Billing Setting] → [Management Function Choice]

A. AppleTalk Settings

(1) Use

- To set whether to enable or disable the AppleTalk setting.

(2) Procedure

- The default setting is OFF.

ON "OFF"

B. Printer Name

(1) Use

- To set the printer name displayed on the AppleTalk network.

(2) Procedure

1. Touch [Printer Name].
2. Enter the printer name (up to 31 characters) on the on-screen keyboard, and touch [OK].

C. Zone Name

(1) Use

- To set the zone name connected with AppleTalk network.

(2) Procedure

1. Touch [Zone Name].
2. Enter the zone name (up to 31 characters) on the on-screen keyboard, and touch [OK].

D. Current Zone

(1) Use

- To display the current zone on AppleTalk network.

10.6.45 Network Settings-Bonjour Setting

A. Bonjour Setting

(1) Use

- To use when operating under the Bonjour service environment.

(2) Procedure

- The default setting is ON.

"ON" OFF

B. Bonjour Name

(1) Use

- To set the name for identifying over the bonjour network.

(2) Procedure

1. Touch [Bonjour Name].
2. Enter the Bonjour name (up to 64 characters) on the on-screen keyboard, and touch [OK].

10.6.46 Network Settings-TCP Socket Settings

A. TCP Socket

(1) Use

- To set whether or not to set the TCP socket.
- To set the port number for TCP socket transmission.

(2) Procedure

<TCP Socket>

- The default setting is ON.

"ON" OFF

<Port Number>

1. Touch the Clear key.
2. Enter the port number between 1 and 65535 using the 10-key pad.

- When SSL Certificate is registered, the following can be set.

<SSL Setting>

- The default setting is OFF.

ON "OFF"

<Port Number>

1. Touch [Enter].
2. Press Clear key.
3. Enter a port number within the range between 1 and 65535 with the 10-key pad.

<Port Number (SSL)>

1. Touch [Enter].
2. Press Clear key.
3. Enter a port number within the range between 1 and 65535 with the 10-key pad.

B. TCP Socket (ASCII Mode)

(1) Use

- To set whether or not to set the TCP socket for ASCII mode.
- To set the port number which is used for TCP socket transmission by ASCII mode.

(2) Procedure

<TCP Socket/ASCII Mode>

- The default setting is ON.

"ON" OFF

<Port Number (ASCII Mode)>

1. Touch the Clear key.
2. Enter the port number between 1 and 65535 using the 10-key pad.

10.6.47 Network Settings-Network Fax Setting

- It will not be displayed on the screen when all items are set to “OFF” in the following settings.
  [Service Mode] → [System 2] → [Network Fax Settings]

A. Network Fax Function Settings

(1) IP Address Fax Function

- Setting will be available only when [IP Address Fax] is set to “ON” in the following settings.
  [Service Mode] → [System 2] → [Network Fax Settings]

<Use>

- To set whether or not to use IP address fax function.

<Procedure>

- The default setting is OFF.

ON	“OFF”

(2) Internet Fax Function

- Setting will be available only when [Internet Fax] is set to “ON” in the following settings.
  [Service Mode] → [System 2] → [Network Fax Settings]

<Use>

- To set whether or not to use Internet fax function.

<Procedure>

- The default setting is OFF.

ON	“OFF”

B. SMTP TX Settings

(1) Use

- To set SMTP TX when network fax function is being used.
- To set SMTP TX port number and connecting time out period when network fax function is being used.

(2) Procedure

<Port Number>

1. Touch [Input].
2. Enter the port number between 1 and 65535 using the 10-key pad.

<Connection Timeout>

1. Touch [Input].
2. Enter the connection timeout time between 5 and 1000 (sec.) using the 10-key pad.

C. SMTP RX Settings

(1) Use

- To set SMTP RX when network fax function is being used.
- To set SMTP RX port number and connecting time out period when network fax function is being used.

(2) Procedure

<SMTP RX>

- The default setting is ON.

"ON"	OFF

<Port No.>

1. Touch [Input].
2. Enter the port number between 1 and 65535 using the 10-key pad.

<Connection Timeout>

1. Touch [Input].
2. Enter the connection timeout time between 5 and 1000 (sec.) using the 10-key pad.

10.6.48 Network Settings-WebDAV Settings

A. WebDAV Client Settings

(1) WebDAV Client Setting

<Use>

- To set whether to use WebDAV Client Settings.

<Procedure>

- The default setting is ON.

"ON"	OFF

(2) WebDAV Client Settings: Proxy Server Address

<Use>

- To set the proxy server address.

<Procedure>

1. Touch [Host Address].
2. Select [Input Host Name], [IPv4 Address Input], or [IPv6 Address Input] and enter a host address.

(3) WebDAV Client Settings: Proxy Server Port Number

<Use>

- To set the proxy server port number.

<Procedure>

1. Press the Clear key.
2. Enter the proxy server port number between 1 and 65535 using the 10-key pad.

(4) WebDAV Client Settings: User Name

<Use>

- To set the user name for WebDAV authentication.

<Procedure>

1. Touch [User Name].
2. Enter the user name on the on-screen keyboard, and touch [OK].

(5) WebDAV Client Settings: Password

<Use>

- To set the password for WebDAV authentication.

<Procedure>

1. Touch [Password].
2. Enter the password on the on-screen keyboard, and touch [OK].

(6) WebDAV Client Settings: Connection Timeout

<Use>

- To set the timeout period for connecting to WebDAV server.

<Procedure>

1. Touch [Input].
2. Press the Clear key.
3. Enter the connecting timeout period between 5 and 300 using the 10-key pad.

(7) WebDAV Client Settings: Server Authentication Character Code

<Use>

- To set a character code used during WebDAV server authentication.

<Procedure>

- The default setting is UTF-8.

“UTF-8”	Windows Code page

(8) WebDAV Client Settings: Certificate Verification Level Settings

<Use>

- To verify the server certificate, configure settings to verify the certificate.

<Procedure>

Expiration Date	: Select whether to check that the server certificate is within the validity period.
Key Usage	: Select whether to check that the server certificate is used according to the purpose approved by the issuer.
Chain	: Select whether to check that the server certificate chain (certification path) is correct. The chain is validated by referencing the external certificates managed on this machine.
Expiration Date Confirmation	: Select whether to check that the server certificate is within the validity period. The OCSP service and CRL (Certificate Revocation List) are checked in this order when the expiration date of the certificate is checked.
CN	: Select whether to check that the CN of the server certificate matches the server address.

B. WebDAV Server Settings

(1) WebDAV Server Setting

<Use>

- To set whether to use WebDAV Server Settings.

<Procedure>

- The default setting is ON.

"ON"	OFF

(2) WebDAV Server Settings: SSL Setting

- It is displayed only when SSL Certificate is registered.

<Use>

- To set whether to use SSL/TSL for communications when using the machine as WebDAV server.

<Procedure>

- The default setting is Non-SSL Only.

"Non-SSL Only"	SSL Only	SSL/Non-SSL

NOTE

- **When "ON" is selected in [Administrator Settings] → [Security Settings] → [Enhanced Security Mode], only [SSL Only] is selectable.**

(3) WebDAV Server Settings: Password Setting

<Use>

- To set a password to access WebDAV server.

<Procedure>

1. Touch [Password Setting].
2. Enter a password with the keyboard on the screen, and touch [OK].

- Touching [Initial Password] can restore the default password setting. (Default password: sysadm)

10.6.49 Network Settings-Web Service Settings

A. Web Service Common Settings

(1) Web Service Common Settings: Friendly Name

<Use>

- To define a friendly name that is used when printing a job with WSD (Web Service on Devices) function.

<Procedure>

1. Touch [Friendly Name].
2. Enter the friendly name (up to 62 characters) on the on-screen keyboard, and touch [OK].

(2) Web Service Common Settings: Publication Service

<Use>

- To set whether or not to enable Publication Service.
- Select [Enable] when using this machine under an environment where communication is possible only with Windows Vista's IPv6.

<Procedure>

- The default setting is Invalid.

Enable	"Invalid"

(3) Web Service Common Settings: SSL Setting

- It will be displayed only when SSL Certificate is registered.

<Use>

- To set whether to use SSL when using WSD (Web Service on Devices) function.

<Procedure>

- The default setting is OFF.

ON	"OFF"

(4) Web Service Common Settings: Certificate Verification Level Settings

- It will be displayed only when SSL Certificate is registered.

<Use>

- To verify the server certificate, configure settings to verify the certificate.

<Procedure>

Expiration Date	: Select whether to check that the server certificate is within the validity period.
Key Usage	: Select whether to check that the server certificate is used according to the purpose approved by the issuer.
Chain	: Select whether to check that the server certificate chain (certification path) is correct. The chain is validated by referencing the external certificates managed on this machine.
Expiration Date Confirmation	: Select whether to check that the server certificate is within the validity period. The OCSP service and CRL (Certificate Revocation List) are checked in this order when the expiration date of the certificate is checked.

B. Printer Settings

(1) Printer Settings

<Use>

- To set whether to use this printer as a WSD printer.

<Procedure>

- The default setting is OFF.

ON	"OFF"

(2) Printer Settings: Printer Name

<Use>

- To set the WS printer name.

<Procedure>

1. Touch [Printer Name].
2. Enter the friendly name (up to 63 characters) on the on-screen keyboard, and touch [OK].

(3) Printer Settings: Printer Location

<Use>

- To set the WS printer location.

<Procedure>

1. Touch [Printer Location].
2. Enter the friendly name (up to 63 characters) on the on-screen keyboard, and touch [OK].

(4) Printer Settings: Printer Information

<Use>

- To set the WS printer information.

<Procedure>

1. Touch [Printer Information].
2. Enter the friendly name (up to 63 characters) on the on-screen keyboard, and touch [OK].

C. Scanner Settings

(1) Scanner Settings

<Use>

- To set whether to use this machine as a WSD scanner.

<Procedure>

- The default setting is ON.

“ON”	OFF

(2) Scanner Settings: Scanner Name

<Use>

- To set the WS scanner name.

<Procedure>

1. Touch [Scanner Name].
2. Enter the friendly name (up to 63 characters) on the on-screen keyboard, and touch [OK].

(3) Scanner Settings: Scanner Location

<Use>

- To set the WS scanner location.

<Procedure>

1. Touch [Scanner Location].
2. Enter the friendly name (up to 63 characters) on the on-screen keyboard, and touch [OK].

(4) Scanner Settings: Scanner Information

<Use>

- To set the WS scanner information.

<Procedure>

1. Touch [Scanner Information].
2. Enter the friendly name (up to 63 characters) on the on-screen keyboard, and touch [OK].

(5) Scanner Settings: Connection Timeout

<Use>

- To set the timeout period for connection of WS scanner.

<Procedure>

1. Press the Clear key.
2. Enter the connecting timeout period between 30 and 300 using the 10-key pad.

10.6.50 Network Settings-SSDP Settings

A. Use

- To set whether to use SSDP protocol.
- To set the multicast TTL value.

B. Procedure

- The default setting is ON.

"ON" OFF

<Multicast TTL Setting >

- The default setting is 1.

"1" to 10

10.6.51 Network Settings-Detail Settings

A. Device Setting

(1) MAC Address

<Use>

- To display the MAC address of the machine.

<Procedure>

- The address cannot be changed.

(2) Network Speed

<Use>

- To set the network speed.

<Procedure>

- The default setting is Auto (10M/100Mbps).

"Auto (10M/100Mbps)"/Auto (10M/100Mbps/1Gbps)/10Mbps Full Duplex / 10Mbps Half Duplex/100Mbps Full Duplex/100Mbps Half Duplex/1Gbps Full Duplex

NOTE

- **When Network speed setting is changed, turn off the main power switch and turn it on again more than 10 seconds after.**

(3) LLTD Setting

<Use>

- To set whether or not to enable LLTD (Link Layer Topology Discovery).
- By enabling LLTD, Windows Vista's Network Map can show this machine's location on the network.

<Procedure>

- The default setting is Enable.

"Enable"	Disable

B. Time Adjustment Setting

(1) Use

- To set whether to enable or disable the NTP setting.
- To synchronize the time between the server and the client.

(2) Procedure

- The default setting is OFF.

ON	"OFF"

C. Time Adjustment Setting-Auto IPv6 Retrieval

(1) Use

- To set whether or not to automatically obtain NTP server's IPv6 address.

(2) Procedure

- The default setting is ON.

"ON"	OFF

D. Time Adjustment Setting-NTP Server Setting

(1) Use

- To set the NTP server address.

(2) Procedure

<Host Address>

1. Touch [Host Address].
2. Select [IP Address Input], and enter the IP address.
3. Select [Host name Input], and enter the host name.

<Port Number>

1. Touch the Clear key.
2. Enter the port number between 1 and 65535 using the 10-key pad.

E. Time Adjustment Setting-Auto Time Adjustment

(1) Use

- To set whether or not to automatically adjust time.

(2) Procedure

- The default setting is OFF.

ON	"OFF"

F. Time Adjustment Setting-Polling Interval

(1) Use

- To set a polling interval when Auto Time Adjustment is set to ON.

(2) Procedure

1. Press the Clear key.
2. Enter a polling interval within the range between 1 to 240 hours with the 10-key pad.

G. Status Notification Setting

- It will not be displayed when the following setting shows that authentication device is mounted.
  [Service Mode] → [Billing Setting] → [Management Function Choice]
- To notify status, notifications both by E-mail and by SNMP TRAP function can be set. For E-mail, up to ten IP addresses and one IPX address can be set. For SNMP TRAP function, up to five IP addresses and one IPX can be set.

(1) Register Notification Address (IP Address)

<Use>

- To set IP addresses to which machine status notifications are sent.
- Up to 5 addresses can be registered.

<Procedure>

1. From IP address 1 to 5, select an IP address where settings are made.
2. Touch [Host Address].
3. Select [Input Host], [IPv4 Address Input] or [IPv6 Address Input] and enter a host address.
4. Touch the Clear key and enter a port number within the range of 1 to 65535 using the 10-key pad.
5. Touch [Community Name] and enter a community name.
6. Touch [Notification Item] and set the items to be notified to [ON].
7. Touch [OK] and finish the settings.

(2) Register Notification Address (IPX Address)

<Use>

- To set IPX addresses to which machine status notifications are sent.

<Procedure>

1. Touch [IPX Address].
2. Touch [Network Address] or [Node Address] and enter an address.
3. Touch [Community Name] and enter a community name.
4. Touch [Notification Item] and set the items to be notified to [ON].
5. Touch [OK] and finish the settings.

(3) Register Notification Address (E-mail Address)

<Use>

- To set E-mail addresses to which machine status notifications are sent.
- Up to 10 addresses can be registered.

<Procedure>

1. Touch [Forward].
2. From E-mail addresses 1 to 10, select an E-mail address where settings are made.
3. Touch [Edit E-mail Address].
4. Enter an E-mail address (up to 320 one-byte characters) using the keyboard on the screen and touch [OK].
5. Touch [Notification Item] and set the items to be notified to [ON].
6. Touch [OK] and finish the settings.

H. Total Counter Notification Settings

(1) Notification Schedule Setting

<Use>

- To set the schedule for informing the total counter value.
- Two different schedules can be set for reporting.

<Procedure>

1. Touch [Schedule 1] or [Schedule 2].
2. Select the reporting cycle from [Daily], [Weekly] or [Monthly].
3. When selecting [Daily] for the reporting cycle, set the Interval of day(s).
4. When selecting [Weekly] for the reporting cycle, set the Interval of week(s) and day of the Week.
5. When selecting [Monthly] for the reporting cycle, set the Interval of month(s) and date of the month.

(2) Notification Address Setting

<Use>

- To set the e-mail address for reporting the total counter value.
- Up to three e-mail addresses can be set.
- It can be selected whether to apply the schedule of the [Set Schedule] to each address.

<Procedure>

1. Touch [Address 1], [Address 2] or [Address 3].
2. Touch [E-mail Address Edit].
3. Enter the e-mail address (up to 320 one-byte characters) on the on-screen keyboard, and touch [OK].
4. Touch [Set Schedule].
5. Select ON/OFF for each schedule.

(3) Model Name

<Use>

- To set the device name for identifying the copier when reporting the total counter.

<Procedure>

1. Touch [Model Name].
2. Enter the model name (up to 20 one-byte characters) on the on-screen keyboard, and touch [OK].

(4) Send Now

<Use>

- To transfer the current total counter value to the set address.

I. PING Confirmation

(1) Use

- To set the TCP/IP network diagnosis by PING.

(2) Procedure

1. Touch [Host Address] for PING transmission.
2. Select [Input Host Name], [IPv4 Address Input], or [IPv6 Address Input] and enter a host address.
3. Touch [Check Connection] key to check the connection.

J. SLP Setting

(1) Use

- To set whether to use SLP or not.
  Device search will be available with TWAIN by setting SLP enable.

(2) Procedure

- The default setting is Enable.

"Enable"	Disable

K. LPD Setting

(1) Use

- To set whether to use LPD during printing or not.

(2) Procedure

- The default setting is Enable.

"Enable"	Disable

L. Prefix/Suffix Setting

(1) ON/OFF Setting

<Use>

- To set whether to add prefix or suffix to the address when calling or entering an address.

<Procedure>

- The default setting is OFF.

ON	"OFF"

(2) Prefix/Suffix Setting

<Use>

- To register or change the prefix or suffix.
- Eight types of prefix and suffix can be added.
  Prefix: Letters added to the top of the text (header part)
  Suffix: Letters added to the bottom of the text (footer part)

<Procedure>

- Available number to be registered as prefix is up to 20 characters.
- Available number to be registered as suffix is up to 64 characters.

M. Error Code Display Setting

(1) Use

- To set whether or not to display an error code when a network-related error occurs.
- To help to identify the cause of network error by displaying an error code.

(2) Procedure

- The default setting is OFF.

ON	“OFF”

10.6.52 Network Settings-IEEE802.1X Authentication Settings

A. Use

- To set whether or not to use IEEE802.1X authentication.
- To display IEEE802.1X authentication status.
- To initialize IEEE802.1X authentication settings.

NOTE

- **IEEE802.1X authentication settings are made with PageScope Web Connection.**

B. Procedure

- The default setting is OFF.

ON	“OFF”

<Auth. Status>

- Displays present IEEE802.1X authentication status.

<Reset Job Settings>

- Returns all IEEE802.1X authentication settings to initial values.

<Certificate Verification Level Settings>

- Sets a certificate verification method for server certificate verification.

Expiration Date	: Select whether to check that the server certificate is within the validity period.
CN	: Select whether to check that the CN of the server certificate matches the server address.
Chain	: Select whether to check that the server certificate chain (certification path) is correct. The chain is validated by referencing the external certificates managed on this machine.

10.6.53 Network Settings-Web Browser Setting

- It will be displayed only when the optional i-Option (LK-101 v2 or LK-103 v2) is activated.

A. Use

- To set whether to use the web browser function.

B. Procedure

- The default setting is Enable.

“Enable”	Invalid

10.6.54 Network Settings-Bluetooth Setting

- It will be displayed only when the following setting is set to “Invalid.”
  [Service Mode] → [System 2] → [Bluetooth Settings]

A. Use

- To set whether to enable or disable the Bluetooth function.

B. Procedure

- The default setting is Enable.

“Enable”	Invalid

10.6.55 Copier Settings-Auto Zoom (Platen)

A. Use

- To set whether to function the auto zoom when the tray is selected with document set on the original glass (excepting at automatic paper selection mode.)

B. Use

- The default setting is OFF.

ON	“OFF”

10.6.56 Copier Settings-Auto Zoom (ADF)

A. Use

- To set whether to function the auto zoom when the feed tray is selected with document set on the ADF (excepting at automatic paper selection mode.)

B. Procedure

- The default setting is ON.

“ON”	OFF

10.6.57 Copier Settings-Specify Default Tray when APS OFF

A. Use

- To set the tray to be used when APS is cancelled.
- To set the tray (tray 1) for the default setting when cancelling APS.

B. Procedure

- The default setting is Tray Before APS ON.

“Tray Before APS ON”	Default Tray

10.6.58 Copier Settings-Select Tray for Insert Sheet

A. Use

- To select the initial value for the tray for the cover sheet paper.

B. Procedure

- The default setting is Tray 2.

10.6.59 Copier Settings-Print Jobs During Copy Operation

A. Use

- To set whether to receive printing jobs for print data or fax data during copy operation.
- To restrict receiving printing jobs for print data or fax data during copy operation.

Accept : Receives the print data or fax data and print
Receive Only : Print data or fax data will be printed when the copy operation is finished

B. Procedure

- The default setting is Accept.

"Accept" Receive Only

10.6.60 Copier Settings-Automatic Image Rotation

A. Use

- Select whether or not the image is automatically rotated when the document and copy paper orientations are different.

When Auto Paper / Auto Zoom / Reduce is set : If the "Auto" Paper setting, "Auto" Zoom setting or a Reduce setting is selected, the image is automatically rotated to fit the orientation of the paper.
When Auto Paper / Auto Zoom is set : If the "Auto" Paper setting or "Auto" Zoom setting is selected, the image is automatically rotated to fit the orientation of the paper.
When Auto Zoom / Reduce is set : If the "Auto" Zoom setting or a Reduce setting is selected, the image is automatically rotated to fit the orientation of the paper.
When Auto Zoom is set : If the "Auto" Zoom setting is selected, the image is automatically rotated to fit the orientation of the paper.

B. Procedure

- The default setting is When Auto Paper / Auto Zoom is set.

When Auto Paper / Auto Zoom / Reduce is set "When Auto Paper / Auto Zoom is set"
When Auto Zoom / Reduce is set When Auto Zoom is set

10.6.61 Copier Settings-Card Shot Settings

A. Layout

(1) Use

- To set the initial copy layout setting in card shot mode.

(2) Procedure

- The default setting is Top/Bottom.

"Top/Bottom" Left/Right (Top Half) Left/Right

B. Zoom

(1) Use

- To set the initial zoom setting in card shot mode.

(2) Procedure

- The default setting is Full Size.

"Full Size"	x 1.0

C. Store Original Size

(1) Use

- To pre-register original sizes that are used in card shot mode.

(2) Procedure

- Enter an original size, name it, and register the data.

10.6.62 Printer Settings-USB Timeout

A. Use

- To set a period of time that elapses before input and output timeouts of communication are activated.

B. Procedure

- The default setting is 60 seconds for input and output timeouts.

"60 seconds" (10 to 1000 seconds)

10.6.63 Printer Settings-Network Timeout

A. Use

- To set a period of time that elapses before input and output timeouts of communication are activated.

B. Procedure

- The default setting is 60 seconds for input and output timeouts.

"60 seconds" (10 to 1000 seconds)

10.6.64 Printer Settings-Print XPS Errors

A. Use

- To set whether to print error information when an error occurs while printing a XPS file.

B. Procedure

- The default setting is No.

Yes	"No"

10.6.65 Printer Settings-PSWC Direct Print

A. Use

- To set whether or not to allow direct print with PageScope Web Connection.

B. Procedure

- The default setting is No.

Yes	"No"

10.6.66 Printer Settings-Assign Account to Acquire Device Info

A. Use

- Specify whether this machine requests the password from the Windows printer driver when the Windows printer driver acquires device information, for example, which options are installed in this machine.
  Yes : Sets a password. By setting a password, the speed at which the printer driver obtains the machine information increases.
  No : Does not set a password. The machine authenticates the printer driver with the OpenAPI feature.

B. Procedure

- The default setting is No.

Yes "No"

10.6.67 Fax Settings

- Settings are available only when the optional fax kit (FK-508) is mounted.

10.6.68 Fax Settings-Header Information

A. Use

- To register the name of the sender and fax ID which will be printed when transmitting the fax.

B. Procedure

1. Touch [Sender] and enter the name of the sender (up to 30 characters) on the on-screen keyboard.
2. Enter Sender Fax No. (up to 20 characters) using the 10-key pad and [+], [Space] displayed on the screen.

10.6.69 Fax Settings-Header/Footer Position

A. Header Position

(1) Use

- To set the position to print the header when transmitting the fax.

(2) Procedure

- The default setting is Outside Body Text.

Inside Body Text "Outside Body Text" OFF

NOTE

- **[Outside Body Text] cannot be selected for Internet Fax/IP Address Fax.**

B. Print Receiver's Name

- It will not be displayed on the screen when [Fax Target] is set to beside "US" or "HK" in the following settings.
  [Service Mode] → [System 1] → [Marketing Area]

(1) Use

- To set whether to print the information of TX destination (Fax No.) when transmitting the fax.

(2) Procedure

- The default setting is OFF.

ON "OFF"

C. Footer Position

(1) Use

- To set the position to print the footer when transmitting the fax.

(2) Procedure

- The default setting is OFF.

Inside Body Text	Outside Body Text	“OFF”

NOTE

- **[Outside Body Text] cannot be selected for the color mode of IP Address Fax.**

10.6.70 Fax Settings-Line Parameter Setting

A. Dialing Method

(1) Use

- To set the dialing method.

(2) Procedure

- The default setting is PB.

“PB”	10 pps

NOTE

- **The displays are different depending on the country.**

B. Receive Mode

- It will not be displayed when the following setting shows that management device 2 is mounted.
  [Service Mode] → [Billing Setting] → [Management Function Choice]

(1) Use

- To set the fax reception mode.
- To change to manual reception when using the remote reception function, etc. when connected to the external telephone.

(2) Procedure

- The default setting is Auto RX.

“Auto RX”	Manual RX

C. Number of RX Call Rings (Receive Time Interval Setting)

- When the following setting is set to “Time”, [Receive Time Interval Setting] will be displayed.
  [Service Mode] → [Fax Settings] → [Network] → [Network setting 1] → [Receive Signal Detection Mode]

(1) Use

- To set the number of times (times) to receive call rings.
- To change the number of times (times) of the fake ringback tone after it starts calling until it starts receiving.

(2) Procedure

<Number of RX Call Rings>

- The default setting is 2 X.

“2 X” (0 to 15)

<Receive Time Interval Setting>

- The default setting is 6 sec.

“6 sec” (0 to 15)

D. Number of Redials

(1) Use

- To set the number of redials.
- To change the number of times to redial when the line is busy, etc.

(2) Procedure

- The default setting is 3 X.

“3 X” (0 to 7)

NOTE

- **The line which can be set up is different depending on the country.**

E. Redial Interval

(1) Use

- To set the interval for redialing.

(2) Procedure

- The default setting is 3 min.

“3 min” (1 to 15)

F. Line Monitor Sound

(1) Use

- To set whether to output the line monitor sound from the speaker or not.

(2) Procedure

- The default setting is OFF.

ON “OFF”

G. Line Monitor Sound Volume (Send)

(1) Use

- To set the volume of the speaker for the sent signal sound.

(2) Procedure

- The default setting is 10.

"10" (0 to 31)

- Change the volume by touching the [Lower] or [Higher].

H. Line Monitor Sound Volume (Receive)

(1) Use

- To set the volume of the speaker for the received signal sound.

(2) Procedure

- The default setting is 20.

"20" (0 to 31)

- Change the volume by touching the [Lower] or [Higher].

10.6.71 Fax Settings-TX/RX Settings

A. Duplex Print (RX)

- It will not be displayed when [Print Separate Fax Pages] is set to "ON."

(1) Use

- To set whether to carry out the duplex print for the received original when receiving the fax.

(2) Procedure

- The default setting is OFF.

ON "OFF"

B. Letter/Ledger over A4/A3

(1) Use

- To set weather to use the inch paper priority when receiving the fax.

(2) Procedure

ON OFF

NOTE

- **The default setting is different depending on the country.**

C. Print Paper Selection

(1) Use

- To set the priority for paper feed tray when receiving the fax.
  - Auto select : Selected automatically.
  - Fixed Size : Printed only on the fixed size.
  - Priority Size : Printed on size with priority. When the size is not set, it will be printed on the closest size.

(2) Procedure

- The default setting is Auto Select.

"Auto Select" Fixed Size Priority Size

D. Print Paper Size

(1) Use

- To set the paper size to print the text when receiving the fax.
- To make the setting of [Print Paper Size] enable, set [Tray Selection for RX Print] to [Auto].

(2) Procedure

- The initial setting is A4.

A3 B4 "A4"

NOTE

- **The displays are different depending on the country.**

E. Incorrect User Box No. Entry

(1) Use

- To set the operation when the unregistered box number is entered.

(2) Procedure

- The default setting is Print.

"Print" Show Error Message Auto Create User Box

F. Tray Selection for RX Print

(1) Use

- To select the paper tray to be fixed when printing the received text.

(2) Procedure

- The default setting is Auto.
- Items available for selection are different depending on the paper feed option mounted.

"Auto" Tray 1 Tray 2 Tray 3 Tray 4

G. Min. Reduction for RX Print

(1) Use

- To set the print magnification for received text.

(2) Procedure

- The default setting is 96 %.

"96 %" (87 to 96, Full Size)

H. Print Separate Fax Pages

- It will not be displayed when [Duplex Print (RX)] is set to “ON.”

(1) Use

- To set whether to divide the original into pages when it is longer than the standard size.

(2) Procedure

- The default setting is OFF.

ON “OFF”

I. File After Polling TX

(1) Use

- To set whether to delete the original which polling transmission has been completed.

(2) Procedure

- The default setting is Delete.

“Delete” Save

J. No. of Sets (RX)

(1) Use

- To set the number of copies to be printed with the received document.

(2) Procedure

- The default setting is 1 set.

1 set. (1 to 10)

K. Individual Receiving Line Setup

- It will be displayed only when the optional FAX Kit (FK-508) line 2 is installed and the following setting is set to “TX and RX” or “RX Only”.
  [Administrator Settings] → [Fax Settings] → [Multi Line Settings] → [Multi Line Settings] → [Line 2 Setting]

(1) Use

- Specify whether to configure the individual receiving line setup.
- When this setting is set to “ON,” the following settings can be made separately for each fax line:
  Forward TX setting, TSI User Box Setting, PC-FAX RX setting, Memory RX Setting

(2) Procedure

- The default setting is OFF.

ON “OFF”

L. Individual Sender Line Setup

- It will be displayed only when the optional FAX kit (FK-508) line 2 is installed and the following setting is set to “TX and RX” or “TX Only”.
  [Administrator Settings] → [Fax Settings] → [Multi Line Settings] → [Multi Line Settings] → [Line 2 Setting]

(1) Use

- Specify whether to configure the individual sender line setup.
- When this setting is set to “ON,” the following settings can be made separately for each fax line:
  Header Information

(2) Procedure

- The default setting is OFF.

ON “OFF”

10.6.72 Fax Settings-Function Settings

A. Function ON/OFF Setting

(1) F-Code TX

<Use>

- To set whether to use the F code transmission.

<Procedure>

- The default setting is ON.

“ON” OFF

NOTE

- **When the setting is changed, turn off the main power switch and turn it on again more than 10 seconds after.**

(2) Relay RX

- It will be displayed when the following setting is set to “ON.”
  [Service Mode] → [FAX] → [System] → [Display Setting] → [Relay]

<Use>

- To set whether to use the relay RX function.
- To use the machine as the relay delivery station during relay TX.

<Procedure>

- The default setting is ON.

“ON” OFF

(3) Relay Printing

- It will be displayed when the following setting is set to “ON.”
  [Service Mode] → [FAX] → [System] → [Display Setting] → [Relay]

<Use>

- To set whether to use the relay print function.
- To print out the document that the machine relayed during relay TX.
- The relay print will be output in the following case.
  1. When the relay delivery completes appropriately.
  2. When the delivery job is cancelled halfway by turning OFF sub power switch.
  3. When the delivery job is cancelled due to redial over.
  4. When main power switch is turned OFF/ON during relay print error.
  5. When delivery job is deleted in user operation during redialing.
  6. When delivery job is deleted in user operation during relay delivery.

<Procedure>

- The default setting is OFF.

ON	“OFF”

(4) Destination Check Display Function

<Use>

- To set whether or not to display the list of specified addresses when sending the fax.

<Procedure>

- The default setting is OFF.

ON	“OFF”

(5) Confirm Address (TX)

<Use>

- To set whether to use Confirm Address (the machine displays the screen where the user reenters the fax number for confirmation when the user faxes by entering the fax number directly with the keys).

<Procedure>

- The default setting is OFF.

ON	“OFF”

(6) Confirm Address (Register)

<Use>

- To set whether to use Confirm Address (the machine displays the screen where the user reenters the fax number for confirmation when the user faxes by entering the fax number directly with the keys).

<Procedure>

- The default setting is OFF.

ON	“OFF”

B. Memory RX Setting

- It will be displayed only when the following setting is set to “ON.”
  [Service Mode] → [FAX] → [System] → [Display Setting] → [Compulsory Memory RX]
- It will not be displayed when [PC-Fax RX Setting], [Forward TX Setting] or [TSI User Box Setting] is set to “ON.”

(1) Use

- To set whether to use the forced memory RX function.
- To store the received text in the hard disk without printing, and print it out when ordered.

(2) Procedure

- The default setting is NO.
- Enter the password (up to 8 digits) for printing when set to [ON].

C. Closed Network RX

- It will be displayed when the following setting is set to “ON.”
  [Service Mode] → [FAX] → [System] → [Display Setting] → [Closed area RX]

(1) Use

- To set whether to use the closed network function.
- To receive data only from the device which password matches.

(2) Procedure

- The default setting is OFF.
- When set to [OK], enter the password (up to 4 digits) to be used.

D. Forward TX Setting

- It will not be displayed when [PC-Fax RX Setting], [Memory RX Setting] or [TSI User Box Setting] is set to “ON.”
- It will not be displayed when the following setting shows that vendor or authentication device is mounted.
  [Service Mode] → [Billing Setting] → [Management Function Choice]

(1) Use

- To set whether to use the forward fax function.
- To forward the received text to the receiver which has been specified.
  Forward & Print : Forward the received text, and print all out
  Forward & Print (If TX Fails) : Forward the received text, and prints out only when fails to be forwarded

(2) Procedure

<Forward TX Setting>

- The default setting is No.

Yes “No”

- When set to [Yes], set [Output Method], [Forward Dest.], and [Select Line].

E. Incomplete TX Hold

- It will be displayed when the following setting is set to “ON.”
  [Service Mode] → [FAX] → [System] → [Display Setting] → [Re-Transmission]

(1) Use

- To set whether to use incomplete TX hold function.
- To re-send the data failed to be sent after a given time.

(2) Procedure

- The default setting is No.

Yes	“No”

- When set to Yes, specify the File Storage Duration.

F. PC-Fax RX Setting

- It will not be displayed when [Forward TX Setting], [Memory RX Setting] or [TSI User Box Setting] is set to “ON.”

(1) Use

- To set whether to use the PC-FAX reception function.
- To store the received text file in the box in the hard disk.

(2) Procedure

- The default setting is Restrict.

Allow	“Restrict”

- When Allow is selected, make the settings of Receiving User BOX Destination, Print ON/OFF, and Password check ON/OFF.

G. TSI User Box Setting

- It will not be displayed when [Forward TX Setting], [Memory RX Setting] or [PC-Fax RX Setting] is set to “ON.”

(1) Use

- To set whether to use TSI distribution or not.
- To set setting method when there is no matched box at receiving.

Automatically Print	: To print the received data.
Memory RX Use Box	: To store the received data in the forced memory receiving box.
Specified User Box	: To store the received documents in a User Box of this machine.

(2) Procedure

<TSI User Box Setting>

- The default setting is No.

Yes "No"

- Touch the [TSI User Box Registration] and register the distribution.

<Action when TSI User Box is not set.>

- The default setting is Automatically Print.

"Automatically Print" Memory RX User Box Specified User Box

<Print>

- The default setting is Yes.

"Yes" No

10.6.73 Fax Settings-PBX Connection Setting

A. Use

- To set whether to use PBX connection setting or not.
- This will be used when the machine is connected to PBX line.

B. Procedure

- The default setting is No.
- When use this function, enter the external number between 0 and 9999.

10.6.74 Fax Settings-Report Settings

A. Activity Report

- It will not be displayed when the following setting shows that vendor or authentication device 1 is mounted.
  [Service Mode] → [Billing Setting] → [Management Function Choice]

(1) Use

- To set whether to print out the activity report or not, and also the timing for printing.

(2) Procedure

<Activity Report>

- The default setting is ON.

"ON" OFF

- When this setting is set to ON, make the setting of Output Setting and Output Time Settings.

<Output Setting>

- The default setting is Every 100 Comm.

Daily "Every 100 Comm." 100/ Daily

<Remark Column Print Setup>

- The default setting is Normal Printing.

"Normal Printing" User Name Printing Account Name Printing

B. TX Result Report

(1) Use

- To set whether to print out the TX report, and also the timing for printing.

(2) Procedure

- The default setting is If TX Fails.

ON "If TX Fails" OFF

C. Sequential TX Report

(1) Use

- To set whether to print out the sequential TX report or not.

(2) Procedure

- The default setting is ON.

"ON" OFF

D. Timer Reservation TX Report

(1) Use

- To set whether to print out the reservation TX or not.

(2) Procedure

- The default setting is ON.

"ON" OFF

E. Confidential RX Report

(1) Use

- To set whether to print out the confidential RX report.

(2) Procedure

- The default setting is ON.

"ON" OFF

F. Bulletin TX Report

(1) Use

- To set whether to print out the bulletin TX report or not.

(2) Procedure

- The default setting is ON.

"ON" OFF

G. Relay TX Result Report

- It will be displayed when the following setting is set to “ON.”
  [Service Mode] → [FAX] → [System] → [Display Setting] → [Relay]

(1) Use

- To set whether to print out the relay TX result report or not.
- To print out the relay TX result report after the relay delivery is completed when the machine is used as the relay delivery station.

(2) Procedure

- The default setting is ON.

“ON”	OFF

H. Relay Request Report

- It will be displayed when the following setting is set to “ON.”
  [Service Mode] → [FAX] → [System] → [Display Setting] → [Relay]

(1) Use

- To set whether to print out the relay request RX report or not.
- To print out the relay request RX report during relay request RX when the machine is used as the relay delivery station.

(2) Procedure

- The default setting is ON.

“ON”	OFF

I. PC-Fax TX Error Report

(1) Use

- To set whether to print out the PC-fax TX error report or not.

(2) Procedure

- The default setting is OFF.

ON	“OFF”

J. Broadcast Result Report

(1) Use

- To set the format to output the broadcast result report.
  All Destinations : Outputs all reports after transmitting to all addresses
  Each Destination : Outputs a report after each transmission

(2) Procedure

- The default setting is All Destinations.

“All Destinations”	Each Destination

K. TX Result Report Check

(1) Use

- To set whether to display the TX result report screen.

(2) Procedure

- The default setting is OFF.

ON	“OFF”

L. Network Fax RX Error Report

- Settings will be available when either [IP Address Fax Function] or [Internet Fax Function] is set to “ON” in the following settings.
  [Administrator Settings] → [Network Setting] → [Network Fax Setting] → [Network Fax Function Settings]

(1) Use

- To set whether to print RX error report when network fax function is being used.
- To print the error report at unusual situation such as receiving the image data that cannot be processed.

(2) Procedure

- The default setting is ON

“ON”	OFF

M. MDN Message

- Settings will be available only when [Internet Fax Function] is set to “ON” in the following settings.
  [Administrator Settings] → [Network Setting] → [Network Fax Setting] → [Network Fax Function Settings]

(1) Use

- To set whether to print message when receiving response message to MDN request when internet fax function is being used.

(2) Procedure

- The default setting is ON

“ON”	OFF

N. DSN Message

- Settings will be available only when [Internet Fax Function] is set to “ON” in the following settings.
  [Administrator Settings] → [Network Setting] → [Network Fax Setting] → [Network Fax Function Settings]

(1) Use

- To set whether to print message when receiving response message to DSN request when network fax function is being used.

(2) Procedure

- The default setting is OFF.

ON	“OFF”

O. Print E-mail Message Body

- Settings will be available only when [Internet Fax Function] is set to “ON” in the following settings.
  [Administrator Settings] → [Network Setting] → [Network Fax Setting] → [Network Fax Function Settings]

(1) Use

- To set whether to print mail text received normally as the report when internet fax function is being used.

(2) Procedure

- The default setting is ON.

“ON”	OFF

10.6.75 Fax Settings-Job Settings List

- It will not be displayed when the following setting shows that Vendor is mounted.
  [Service Mode] → [Billing Setting] → [Management Function Choice]
  (It will be displayed when the key counter is mounted or when the following setting shows that switch No.33 is set to [01] at HEX assignment.
  [Service Mode] → [System 2] → [Software Switch Setting])

(1) Use

- The set value list of the fax set up into this machine can be printed.

(2) Procedure

1. Touch [Administrator Settings] → [Fax Settings] → [Job Settings List].
2. Select the feed tray.
3. Select the 1-Sided or 2-Sided, and touch the Start key.

10.6.76 Fax Settings-Multi Line Settings

- It will be displayed only when the optional fax kit (FK-508) line 2 is mounted.

A. Line Parameter Setting

(1) Dialing Method

<Use>

- To set the dial method for the expanded line.

<Procedure>

- The default setting is PB.

“PB”	10 pps

NOTE

- **The displays are different depending on the country.**

(2) Number of Rx Call Rings

<Use>

- To set the number of RX call rings for the expanded line.
- To change the number of artificial ringback tones with expanded line when receiving calls until it starts receiving operation.

<Procedure>

- The default setting is 2 X.

“2 X” (0 to 15)

(3) Line Monitor Sound

<Use>

- To set whether or not to output the line monitor sound of the expanded line from the speaker.

<Procedure>

- The default setting is OFF.

ON "OFF"

B. Function Settings

(1) PC-FAX TX Setting

- This setting does not appear when "RX Only" is selected for [Multi Line Settings].

<Use>

- To set the number of the line used for PC-FAX transmission.

<Procedure>

- The default setting is No Selection.

"No Selection" Line 1 Line 2

C. Multi Line Settings

(1) Use

- To set the system for using each line when using more than one line.

(2) Procedure

<Multi Line Usage>

- When selecting [Normal], perform the transmission setting for Line 2.

<Line 2 Setting>

- The default setting is TX and RX.

"TX and RX" RX Only TX Only

D. Sender Fax No.

(1) Use

- To register the fax ID when using the additional line.

(2) Procedure

- Use 10-key pad or [+] / [Space], enter the fax ID (up to 20 characters).

10.6.77 Fax Settings-Network Fax Settings

- It will be displayed only when either [IP Address Fax Function] or [Internet Fax Function] is set to “ON” in the following settings.
  [Administrator Settings] → [Network Settings] → [Network Fax Settings] → [Network Fax Function Settings]

A. Black Compression Level

- It will be displayed only when either [IP Address Fax Function] or [Internet Fax Function] is set to “ON” in the following settings.
  [Administrator Settings] → [Network Settings] → [Network Fax Settings] → [Network Fax Function Settings]

(1) Use

- To set black compression level at black TX mode when network fax function is being used.

(2) Procedure

- The default setting is MH.

MMR MR “MH”

B. Color/Grayscale Multi-Value Compression Method

- It will be displayed only when either [IP Address Fax Function] or [Internet Fax Function] is set to “ON” in the following settings.
  [Administrator Settings] → [Network Settings] → [Network Fax Settings] → [Network Fax Function Settings]

(1) Use

- To set a color/black multi value compression method used when faxing selecting JPEG or PDF as a file format under network fax operation.
  JPEG (Color) : Data is compressed in color JPEG format.
  JPEG (Gray Scale) : Data is compressed in monochrome JPEG format.
  Not Set : Data transmission in color or grayscale is disabled. Data is compressed in black and white (binary) with a specified compression method.

(2) Procedure

- The default setting is JPEG (Color).

“JPEG (Color)” JPEG (Gray Scale) Not Set

C. SIP Adaptor Connection Check

- Not used.

D. Internet Fax Self RX Ability

- It will be displayed only when [Internet Fax] is set to “ON” in the following settings.
  [Administrator Settings] → [Network Settings] → [Network Fax Settings] → [Network Fax Function Settings]

(1) Use

- To set image data compression system, paper size and resolution, which can be received by the machine with internet fax.

(2) Procedure

- The following shows the options of each setting item.

Compression Type	Paper Size	Resolution
MMR	A3	600 x 600dpi (Ultra Fine)
MR	B4	400 x 400dpi (Super Fine)
MH	A4	200 x 200dpi (Fine)
—	—	200 x 100dpi (Standard)

E. Internet Fax Advanced Settings

- It will be displayed only when [Internet Fax] is set to “ON” in the following settings.
  [Administrator Settings] → [Network Settings] → [Network Fax Settings] → [Network Fax Function Settings]

(1) Use

- To set advanced functions of internet fax.

MDN Request : To set whether to send MDN (Message Disposition Notification) request when transmitting through internet fax.

DSN Request : To set whether to send DSN (Delivery Status Notification) request when transmitting through internet fax.

MDN Response : To set whether to response for MDN request made by the other machine when receiving through internet fax.

MDN/DSN Response Monitoring Time:
To set the period to observe the response from the other machine when sending MDN/DSN request. In the case of time over, time out message is notified.

Maximum Resolution : To set maximum resolution for reading, TX/RX and record when internet fax function is being used.

Add Content-Type Information : To set whether or not to add Content-Type information when using Internet fax.
When [Yes] is selected, “application=faxbw” is added as sub-type to MIME Content-Type header.

NOTE

- **Only MDN Request will be sent when both MDN Request and DSN Request are set to “Yes.”**

(2) Procedure

- Default settings are shown below.

MDN Request	: “Yes”	Do Not Send
DSN Request	: Yes	“Do Not Send”
MDN Response	: “Yes”	Do Not Send
MDN/DSN Response Monitoring Time:	“24 hours” (1 to 99)	Do Not Monitor
Maximum Resolution	: “600 x 600dpi (Ultra Fine)”	400 x 400dpi (Super Fine)
Add Content-Type Information	: Yes	“Do Not Send”

F. IP Address Fax Operation Settings

- It will not be displayed when [IP Address Fax Function] is set to “OFF” in the following settings.
  [Administrator Settings] → [Network Settings] → [Network Fax Settings] → [Network Fax Function Settings]

(1) Use

- To set the operational mode applied to IP address fax.
  Mode1: This mode allows communication between Konica Minolta models capable of transmitting IP address faxes and models compatible with the Direct SMTP standard defined by CIAJ. However, a unique method developed for Konica Minolta models is used to transmit a color fax.
  Mode2: This mode allows communication between Konica Minolta models capable of transmitting IP address faxes and models compatible with the Direct SMTP standard defined by CIAJ. The transmission in color mode is performed in the communication mode (Profile-C format) compatible with the Direct SMTP standard.

(2) Procedure

<Operation Mode>

- The default setting is Mode1.

“Mode1” Mode2

- When selecting Mode 2, make color original transmission settings.

10.6.78 Fax Print Quality Settings

(1) Use

- To set whether to correct the received text of G3 fax according to the resolution.
  Prioritize Quality: Corrects and outputs the received image.
  Prioritize Speed: Does not correct the received image, which results in a shorter output time.

(2) Procedure

<Low Resolution>

- The default setting is Prioritize Quality.

“Prioritize Quality” Prioritize Speed

<High Resolution>

- The default setting is Prioritize Speed.

Prioritize Quality “Prioritize Speed”

10.6.79 System Connection-OpenAPI Settings

A. Access Setting

(1) Use

- To allow or restrict the access from other systems with OpenAPI when using PageScope Data Administrator.

(2) Procedure

- The default setting is Allow.

"Allow" Restrict

B. SSL/Port Settings

(1) Use

- To set the SSL/access port for other systems with OpenAPI.

(2) Procedure

<SSL Setting>

- The default setting is Non-SSL Only.

"Non-SSL Only" SSL Only SSL/Non-SSL

<Port No./Port No.(SSL)>

1. Select Port No. or Port No. (SSL), and touch [Input].
2. Press the Clear key.
3. Enter the port number between 1 and 65535 using the 10-key pad.

<Client Certificates>

- The default setting is Do Not Request.

Request "Do Not Request"

<Certificate Verification Level Settings>

Expiration Date	: Select whether to check that the server certificate is within the validity period.
Key Usage	: Select whether to check that the server certificate is used according to the purpose approved by the issuer.
Chain	: Select whether to check that the server certificate chain (certification path) is correct. The chain is validated by referencing the external certificates managed on this machine.
Expiration Date Confirmation	: Select whether to check that the server certificate is within the validity period. The OCSP service and CRL (Certificate Revocation List) are checked in this order when the expiration date of the certificate is checked.
CN	: Select whether to check that the CN of the server certificate matches the server address.

C. Authentication

(1) Use

- To set whether to authenticate access of other systems which uses OpenAPI when using PageScope Data Administrator.
- To set authentication of the access from other systems using OpenAPI.

(2) Procedure

- The default setting is OFF.

ON	“OFF”

- When setting to [ON], enter the login name and the password to be set.

10.6.80 System Connection-Call Remote Center

- It will be displayed when the setup at the CS Remote Care center is complete.

A. Use

- To call the CS Remote Care center from the administrator, when the CS Remote Care setup is complete.

B. Procedure

For details, see “CS Remote Care.”
See P.386

10.6.81 System Connection-Automatic Prefix/Suffix Setting

(1) Use

- Select whether to automatically add prefix and suffix to a destination number.

(2) Procedure

- The default setting is OFF.

ON	“OFF”

10.6.82 System Connection-Printer Information

- It will be displayed only when the optional local interface kit EK-605 is mounted.

A. Use

- Specify [Printer Name], [Printer Location], [Printer Information], and [Printer URI].
  The [Printer Information] setting is linked to [Printer Information] in [HTTP Server Settings].

B. Procedure

1. Touch [Printer Information].
2. Enter the printer name, printer location and printer information using the keyboard on the display.
3. Touch [Printer URI], and confirm the printer URI information.

10.6.83 System Connection-Cellular Phone/PDA Setting

- It will be displayed only when the optional local interface kit EK-605 is mounted.

A. Use

- Specify whether to allow the user to print data in a cellular phone or PDA or save such data in a User Box.

B. Procedure

- The default setting is Restrict.

Allow	“Restrict”

10.6.84 Security Settings-Administrator Password

A. Use

- To set/change the administrator password.

B. Procedure

- Enter the administrator password on the on-screen keyboard.
  Current Password : Enter the current administrator password
  New Password : Enter the new administrator password to be used
  Re-Input Password : Re-enter the new administrator password

NOTE

- **When selecting [Utility/Counter] → [Administrator Settings] → [Security Setting] → [Security Details] leads to [Password Rules] being ON, the password with the same letters, the password which is same as the previous one and the password of less than eight digits cannot be changed.**

10.6.85 Security Settings-User Box Admin. Setting

- Setting is disabled if user authentication or account track is not performed.

A. Use

- To set whether to allow or restrict the box administrator to use the system.
- To allow the box administrator to use the system.
  The box administrator is the special administrator for box, who is allowed to browse contents in common box / individual box without the password.

NOTE

- **[Allow] cannot be set when the user authentication or account track is not carried out.**

B. Procedure

- The default setting is Restrict.

Allow "Restrict"

NOTE

- **[Allow] cannot be selected when user authentication and account track are not conducted.**
- **[Allow] cannot be selected when the following setting is set to "ON."**
  [Administrator Settings] → [Security Settings] → [Enhanced Security Mode]

- Set the password when setting to [Allow].

NOTE

- **When the following setting shows that [Password Rules] is set to "ON", the Password using only a single letter or the password same with the previous one, or the password with less than eight letters cannot be accepted.**
  [Administrator Settings] → [Security Settings]

10.6.86 Security Settings-Administrator Security Levels

- It will not be displayed when the following setting shows that vendor or authentication device 1 is mounted.
  [Service Mode] → [Billing Setting] → [Management Function Choice]

A. Use

- To set the level for administrator settings item open to the user.
- To make part of the administrator settings items open to the user.

Level 1 : [Power Save Setting], [Auto Magnification Selection (Platen)], [Auto Magnification Selection (ADF)], [Specify Default Tray when APS Off], [Select Tray for Insert Sheet] and [Card Shot Settings] are available to users.

Level 2 : [Power Save Setting], [Output Setting], [Date/Time Setting], [Daylight Savings Time Setting], [AE Level Adjustment], [Auto Magnification Selection (Platen)], [Auto Magnification Selection (ADF)], [Specify Default Tray when APS Off], [Select Tray for Insert Sheet], and [Print Jobs During Copy Operation] are available to users.

Prohibit : Not to allow the user to set neither Level 1 nor Level 2

B. Procedure

- The default setting is Prohibit.

Level 1 Level 2 "Prohibit"

10.6.87 Security Settings-Security Details

A. Password Rules

(1) Use

- To set whether to apply the password rules.
- To apply the password rule to enhance security.
- Passwords to be covered: CE password, administrator password, public user box password, user password, account track password, passwords for confidential documents, SNMPv3 WriteUser password, WebDAV server password.
- Details of the password rules:
  Password except user password, public user box password, SNMPv3 WriteUser password shall be 8 digits of one-bite alphanumeric characters. (Case-sensitive)
  User password shall be 8 to 64 digits of one-bite alphanumeric characters. (Case-sensitive)
  Public user box password shall be 8 digits of one-bite alphanumeric characters.
  SNMPv3 WriteUser password shall be 8 to 32 digits of one-bite alphanumeric characters.
  Password with only the same letter is prohibited.
  Password same with the one prior to change is prohibited.

When the password rule is set to [ON], the password cannot be changed or registered unless it follows the above conditions.

(2) Procedure

- The default setting is OFF.

ON	“OFF”

NOTE

- **[OFF] cannot be selected when the following setting is set to “ON.”**
  [Administrator Settings] → [Security Settings] → [Enhances Security Mode]
- **[ON] cannot be selected when the following setting is set to “OFF.”**
  [Service Mode] → [Enhanced Security] → [CE Authentication]
  [CE Authentication] will not be displayed and cannot be set to “OFF” when [Password Rules] is set to “ON.”

B. Prohibited Functions When Authentication Error

(1) Use

- To set the function for prohibiting authentication operation in order to prevent the unauthorized access.
- To use when setting the system to prohibit authentication failure when conducting authentication by password, etc.
- Authentications which are subjected to this function: CE authentication, administrator authentication, user+ accounts authentication, SNMP authentication, secure print authentication, user box authentication.

Mode 1 : When failed to authenticate, authentication operation (entering the password) will be prohibited for a certain period of time.

Mode 2 : When failed to authenticate, authentication operation (entering the password) will be prohibited for a certain period of time.
The number of times failure occurred will be counted, and when the number reaches to the specified time, authentication will be prohibited and the access will be locked.
When the access is locked, touch [Release] on the main body, or turn main power switch OFF/ON to cancel it.
For CE authentication and administrator authentication, only turning main power switch OFF/ON will cancel it.
When the machine goes into an access lock condition, release the lock in the following procedure.

User+ accounts authentication SNMP authentication Secure print authentication User box authentication	• Touch keys in the following order. [Administrator Settings] → [Security Setting] → [Security Details] → [Prohibited Functions When Authentication Error]. Then touch [Release].
Administrator authentication	• After the main power switch is turned OFF and ON, the access lock is released automatically after the lapse of a predetermined period of time.
	• [Service Mode] → [Enhanced Security] → [Administrator unlocking]
CE authentication	• The lock release timer starts to operate by input the Stop → 0 → 9 → 3 → 1 → 7 in [Meter Count] → [Check Details] → [Coverage Rate] after the main power switch is turned OFF and On. When the timer reaches the time specified in this setting, the access lock is released.

(2) Procedure

- The default setting is Mode 1.

“Mode 1” Mode 2

NOTE

- **[Mode2] cannot be selected when the following setting is set to “ON.”**
  [Administrator Settings] → [Security Setting] → [Enhanced Security Mode]
- **Only the number of times for trials up to the access lock can be changed.**

- When [Mode 2] is selected, set the number of times where checks are made before access is locked.

- Touch [Release Time Settings] and set a period of time that elapses before access lock is released.

C. Confidential Document Access Method

(1) Use

- To display the status of the authentication system on the control panel for the confidential document access.
- It cannot be changed at the operator's option since it will automatically be set according to the [Prohibit Functions When Auth. Error] setting.
- It will be set to [Mode 1] when [Prohibit Functions When Auth. Error] is set to [Mode 1].
  It will be set to [Mode 2] when [Prohibit Functions when Auth. Error] is set to [Mode 2].

Mode 1 : This mode is for authentication by confidential document ID and password. It displays the list of the corresponding confidential document to print them.
Mode 2 : This mode is for authentication by confidential document ID. It displays the list of the corresponding confidential document, and print them with authentication by password.

NOTE

- **[Mode2] cannot be selected when the following setting is set to "ON."**
  [Administrator Settings] → [Security Setting] → [Enhanced Security Mode]

(2) Procedure

- The default setting is Mode 1.

"Mode 1" Mode 2

D. Manual Destination Input

(1) Use

- To set whether to allow or prohibit to manually enter the destination address on the destination Input screen.

Allow All : Allows manual destination input in all transmission options.
Enable Functions Individually : Allows manual destination input only for G3 fax and restricts it in other transmission options.
Restrict : Hides the [Direct Input] tab to prevent you from directly entering destinations.

(2) Procedure

- The default setting is Allow All.

"Allow All" Enable Functions Individually Restrict

E. Print Data Capture

(1) Use

- To set whether to allow or restrict capturing the print job data.
- To be used when carrying out [Service Mode] → [System 2] → [Data capture].

(2) Procedure

- The default setting is Allow.

"Allow" Restrict

NOTE

- **[Allow] cannot be selected when the following setting is set to "ON."**
  [Administrator Settings] → [Security Setting] → [Enhanced Security Mode]

F. Job Log Settings

(1) Use

- Selects whether to keep logs of operations and access made by users and service engineers.
- To set whether to overwrite existing logs.
- To ensure security, this settings is used to keep logs of operations and access including security settings changes, authentication, and job executions by users and service engineers.
- Logs are saved in HDD and NVRAM.

(2) Procedure

- The default setting is No.

Yes	“No”

NOTE

- **After selecting “Yes”, the main power switch must be turned OFF and ON so that the new setting takes effect.**
- **When ON is selected in [Administrator Settings] → [Security Settings] → [Enhanced Security Mode], this setting is automatically set to “Yes.”**

<Overwrite>

- Set whether to allow or restrict overwriting existing logs when saving audit logs.
- The default setting is Restrict.

Allow	“Restrict”

- To erase audit logs, press [Erase Job Log].

G. Restrict Fax TX

(1) Use

- To set whether or not to prohibit sending fax.

(2) Procedure

- The default setting is OFF.

ON	“OFF”

H. Hide Personal Information

- It will not be displayed when the two settings below are as follows:
  The authentication device is set in [Service Mode] → [Billing Setting] → [Function Management Choice] → [Authentication Device].
  “NO” is selected in [Administrator Settings] → [Security Settings] → [Function Management Settings] → [Authentication Device Setting] → [Job Confirmation Display].

(1) Use

- Selects whether to display file names and destinations in job logs.

(2) Procedure

- The default setting is OFF.

ON	“OFF”

I. Hide Personal Information (MIB)

- It will not be displayed when the setting below is as follows:
  "ON" is selected in [Administrator Settings] → [Security Settings] → [Enhanced Security Mode].

(1) Use

- Specify whether to display the file name, address, or User Box number as MIB information in Job List.

(2) Procedure

- The default setting is ON.

"ON"	OFF

J. Display Activity Log

- It will not be displayed when both settings are as follows:
  The authentication device is set in [Service Mode] → [Billing Setting] → [Function Management Choice] → [Authentication Device].
  "NO" is selected in [Administrator Settings] → [Security Settings] → [Function Management Settings] → [Authentication Device Setting] → [Job Confirmation Display].

(1) Use

- Selects whether to display communication logs for scan/fax transmission.

(2) Procedure

- The default setting is ON.

"ON"	OFF

K. Initialize

(1) Use

- All data of selected items is cleared.
- Data of the following items can be cleared.
  - Job history
  - Copy Program
  - Network Settings
  - One-Touch/User Box Registration

(2) Procedure

1. Touch [Initialize].
2. Select the desired item to clear its data and touch [OK].
3. Select [Yes] on the confirmation screen and touch [OK] to initialize the data.

L. Job History Thumbnail Display

(1) Use

- To set whether or not to display a thumbnail of originals when displaying a job history.

(2) Procedure

- The default setting is OFF.

ON	"OFF"

M. Secure Print Only

- It will be displayed only when the hard disk is installed.

(1) Use

- To set whether or not to allow only Secure Print for print jobs from PC.
  When “ON” is selected in this setting, the Secure Print feature must be always used for printing from a printer driver. As all print jobs require ID or a password, output documents remains private.

(2) Procedure

- The default setting is OFF.

ON	“OFF”

N. Copy Guard

- It will be displayed only when the optional security kit SC-507 is mounted.

(1) Use

- Specify whether to use the Copy Guard function.
  If [Copy Guard] is selected in [Application], you can embed copy inhibit information on paper.
- This is used upon set-up of the optional security kit SC-507.

(2) Procedure

- The default setting is No.

Yes	“No”

O. Password Copy

- It will be displayed only when the optional security kit SC-507 is mounted.

(1) Use

- Specify whether to use the Password Copy function.
  If [Password Copy] is selected in [Application], you can embed a password on paper. You can also detect a password embedded on paper.
- This is used upon set-up of the optional security kit SC-507.

(2) Procedure

- The default setting is No.

Yes	“No”

P. Web browser contents access

(1) Use

- To set whether to enable or disable access to locally-stored files (pre-installed contents, image files, and help files) from the web browser that is interacting with MFP via OpenAPI applications.

(2) Procedure

- The default setting is Allow.

“Allow”	Restrict

* When using the application where server authentication is carried out by web browser extensions, [Allow] is automatically selected.

10.6.88 Security Settings-Enhanced Security Mode

A. Use

- To set whether or not to enhance security.
- To use when enhancing the security function at user's option.
- The following settings are necessary for setting the security enhancement "ON".

Administrator Password	: Change it with the one which meets password rules.
User Authentication	: Set to "User Authentication (MFP)" or "User Authentication (External Server)".
HDD encryption word	: Set the encryption word with 20 characters.
SSL Certificate	: Register self-certificate for SSL communication from the PSWC.
Image Controller Setting	: Set to [Controller 0].
CE Password	: Change it with the one which meets password rules.
CE Authentication	: Set to [ON].
Image Controller Setting	: Set to [Controller 0].
Management Function Choice	: Set to "Unset."

B. Procedure

- The default setting is OFF.

ON "OFF"

NOTE

- **Note that setting Enhanced Security Mode to "ON" disables the following functions.**
  Terminal Debug (forcibly prohibited when Enhanced Security Mode is set to "ON")
  Print Data Capture (forcibly prohibited when Enhanced Security Mode is set to "ON")
  In CS Remote Care, the following operation is prohibited.
  Rewriting instructions of firmware, communication of the account track counter information, the setting renewal of the machine
  Firmware upgrading through Internet ISW (When the Enhanced Security Mode is set to ON, the setting of this function cannot be changed from "OFF.")
- **Setting the Enhanced Security Mode "ON" will change the setting values for the following functions.**

Function Name	Default Setting	When Enhanced Security mode is set to [ON]
Password Rules • To apply the password rule to enhance security.	OFF	ON (not to be changed)
Prohibit Functions When Auth. Error • To set the function for prohibiting Authentication operation in order to prevent the unauthorized access.	Mode 1	Mode 2 (not to be changed): Three times is set. * The number of times can be changed to once, twice, or three times. (It is twice, four or six times for WebDAV server password.)

Function Name	Default Setting	When Enhanced Security mode is set to [ON]
Secure Document Access Method • To display the status of the Authentication system on the control panel for the Confidential document access.	Mode1	Mode 2 (not to be changed) * In association with Prohibit Functions When Auth. Error, the method is changed from authentication using Secure Document ID and password (Mode 1) to that using the password with the Secure Document first narrowed down by Secure Document ID (Mode 2).
Public User Access • To permit use by a public user having no user registration if user authentication setting has been made.	Restrict	Restrict (not to be changed)
User List • To display the list key for User names on User Authentication screen.	OFF	OFF (not to be changed)
Print without Authentication • To allow or restrict printing which user and account are not specified.	Restrict	Restrict (not to be changed)
User Box Admin. Setting • To set whether to allow or restrict the Box Administrator to use the system.	Restrict	Restrict (not to be changed)
SSL • To set whether to encrypt access by SSL.	OFF	ON (not to be changed)
SSL Encryption Strength • To set the SSL encryption strength for the SSL encryption communication.	AES-256, 3DES-168, RC4-128,DES-56, RC4-40	AES/3DES (not to be changed to one containing strength lower than AES/3DES)
Automatically Obtain Certificates of S/MIME	No	No (not to be changed)
S/MIME Encryption Method	3DES	3DES (not to be changed to DES or RC-2)
FTP Server • To set whether to use FTP server or not.	ON	OFF (not to be changed)
SNMPv1/v2c • To use when changing Write setting.	Read/Write enable	Only Read is enabled (not to be changed)
SNMP v3 Security Level and auth/priv-password • To set the security level for the Reading/Writing Authority User which is used for SNMP v3.	auth/priv-password	The security level can be selected from among [authpassword] and [auth/priv-password]. An 8-digit-or-more auth-password and priv-password can both be set.
Print Data Capture • To set whether to allow or restrict capturing the Print Job Data.	Allow	Restrict (not to be changed)

Function Name	Default Setting	When Enhanced Security mode is set to [ON]
Network Setting Clear • To clear the network setting through PageScope Web Connection.	Enabled	Restrict
Administrator Password Change Via Network • To clear the network setting through PageScope Web Connection.	Enabled	Restrict (not to be changed)
Release Time Settings • To set the period of time to be elapsed before the access lock state is released.	5 min.	The setting value should be 5 min. or more (no value less than 5 can be set)
Destination Registration Change by User (Address Book and Program destination)	Enabled	Restrict (not to be changed)
Secure Print User Box Preview	Thumbnail View, Detail View, and Document Details are enabled	Only Detail View is enabled before password authentication (Mode 2)
Initialize (Network Settings) • To clear the network related settings.	Enabled	Restrict (not to be changed)
Image Log Transfer Settings • Specifies whether to transfer the input or output image data to the server using whenever MFP inputs or outputs image data.	OFF	OFF (not to be changed)
Internet ISW Set • To set firmware upgrading by Internet ISW, and enable or disable various settings.	OFF	OFF (not to be changed)
Operation Ban release time • To set the period of time to be elapsed before the access lock state is released in CE password authentication.	5 min.	The setting value should be 5 min. or more (no value less than 5 can be set)

10.6.89 Security Settings-HDD Settings/SSD Settings

A. Check HDD Capacity/Check SSD Capacity

(1) Use

- To display the used space capacity, total space capacity, and the remaining capacity of the hard disk or the SSD.
- To check the capacity and the status of use of the hard disk or the SSD.

B. Overwrite HDD Data

- It will be displayed only when the hard disk is installed.
- When the image becomes unnecessary, temporary data overwrite function will write meaningless data over all area where images are stored, and destroy the image data itself.
  The structure of image data will be destroyed so that in case HDD is stolen, the remaining data included in the image data will not leak. Using the HDD lock password function or HDD encryption function along with this function will provide a high level of security which prevents images of great importance from leaking. It is recommended to use HDD lock password function or HDD encryption function along with this function for those who require high level of security.

(1) Use

- To set whether or not to use overwrite temporary data.
- To set overwriting method to use temporary data overwrite function.
- To use when making temporary data overwrite function valid.
- All data are temporarily written into HDD during PC print, copier print, scanning and fax transmission. When the operation is complete, perform overwriting to the area data were once written in HDD in order to enhance security.
- To change overwriting method to use temporary data overwrite function.
  Mode 1: To overwrite 0x00 one time.
  Mode 2: Overwrite 0x00 → overwrite 0xff → overwrite 0x61 →validation

- "Encryption Priority/Overwrite Priority" can be selected.
  Encryption Priority : When the encryption word is set, the security level of the data will be enhanced before writing to HDD. When erasing data, they will all be converted into encryption data before overwritten. Therefore, overwriting will be executed with the value besides the value specified by the selected mode.
  Overwrite Priority : Standard encryption method will be applied to data written to HDD even when the encryption word is set, so overwriting and erasing will be performed without fail using the specified value in the selected mode.
  It is used for performing the overwriting and erasing according to the HDD data erase standard.

NOTE

- **It is necessary to make HDD format when encryption priority/overwrite priority setting is changed.**

(2) Procedure

- The default setting is OFF.

ON "OFF"

When selecting [ON], select an overwrite method.

- The default setting is Mode 1.

"Mode 1" Mode 2

NOTE

- **[OFF] cannot be selected when the following setting is set to "ON."**
  [Administrator Settings] → [Security Setting] → [Enhanced Security Mode]

- The default setting is Encryption Priority.

"Encryption Priority" Overwrite Priority

C. Overwrite All Data - when the HDD is installed

(1) Use

- To delete the whole data in the hard disk by overwriting.
- To initialize the area of use for the user stored in NVRAM.
- To use when disposing of the hard disk.
- Select the overwriting method from Mode 1 through 8.

  Mode 1 : It overwrites 0x00 once.

  Mode 2 : Overwrites with random numbers → overwrites with random numbers → overwrites with 0x00

  Mode 3 : Overwrites with 0x00 → overwrites with 0xff → overwrites with random numbers → verifies

  Mode 4 : Overwrites with random numbers → overwrites with 0x00 → overwrites with 0xff

  Mode 5 : Overwrites with 0x00 → overwrites with 0xff → overwrites with 0x00 → overwrites with 0xff

  Mode 6 : Overwrites with 0x00 → overwrites with 0xff → overwrites with 0x00 → overwrites with 0xff → overwrites with 0x00 → overwrites with 0xff → overwrites with random numbers

  Mode 7 : Overwrites with 0x00 → overwrites with 0xff → overwrites with 0x00 → overwrites with 0xff → overwrites with 0x00 → overwrites with 0xff → overwrites with 0xaa

  Mode 8 : Overwrites with 0x00 → overwrites with 0xff → overwrites with 0x00 → overwrites with 0xff → overwrites with 0x00 → overwrites with 0xff → overwrites with 0xaa → verifies

(2) Procedure

1. Touch [Overwrite All Data].
2. Touch [Overwrite].
3. Touch [Yes] on the check screen.
4. Touch [YES] on the confirmation screen.
5. Turn off the main power switch and turn it on again more than 10 seconds after.

D. Overwrite All Data - when the HDD is not installed

(1) Use

- To delete the area in SSD that is used by users.
- To initialize the area in NVRAM that is used by users.
- To use when disposing of the main body.
- 0x00 is used as the overwriting method.

(2) Procedure

1. Touch [Overwrite All Data].
2. Touch [Overwrite].
3. Touch [YES] on the confirmation screen.
4. Turn off the main power switch and turn it on again more than 10 seconds after.

E. HDD Lock Password

- It will be displayed only when the hard disk is installed.

(1) Use

- To set the lock password for the hard disk.
- To enter, change or delete the lock password for the hard disk.

(2) Procedure

1. Touch [HDD Lock Password].
2. Enter the password (20 characters) on the on-screen keyboard, and touch [OK].

NOTE

- **Password using only a single letter is not acceptable.**
- **Don't forget the password. When the password is forgotten, the replacement of hard disk is needed.**
- **After setting a lock password, if you replace the HDD due to its breakage or other reasons and install a new HDD, an error message is displayed. In that case, clear the HDD lock password and set a new password with the procedure shown below.**

3. Re-enter the password to confirm.
4. Turn OFF the main power switch and turn it ON again more than 10 seconds after.

F. Format HDD

- It will be displayed only when the hard disk is installed.

(1) Use

- To conduct logical formatting of HDD.
- The following shows the data deleted by formatting the HDD.
  - Program
  - Address Book
  - Authentication method setting
  - User authentication setting
  - Account track setting
  - User Box
  - User Box setting
  - Documents in User Boxes
  - Confidential User Box setting
  - Bulletin Board User Box setting

NOTE

- **It is subject to logical formatting here, therefore if starting with physical formatting, follow as [Service Mode] → [State Confirmation] → [Memory/HDD Adj.] → [HDD Format].**

(2) Procedure

1. Touch [Format HDD].
2. Select [Yes] on the confirmation screen and touch [OK].
3. Turn off the main power switch and turn it on again more than 10 seconds after.

G. Format SSD

- It will be displayed only when the hard disk is not installed.

(1) Use

- To conduct logical formatting of SSD.
- The following shows the data deleted by formatting the SSD.
  - Program
  - Address Book
  - Authentication method setting
  - User authentication setting
  - Account track setting
  - User Box
  - User Box setting
  - Documents in User Boxes
  - Confidential User Box setting
  - Bulletin Board User Box setting

(2) Procedure

1. Touch [Format SSD].
2. Select [Yes] on the confirmation screen and touch [OK].
3. Turn off the main power switch and turn it on again more than 10 seconds after.

H. HDD Encryption Setting

- It will be displayed only when the hard disk is installed.

(1) Use

- To re-set encrypting word due to exchange of NVRAM board or etc.

NOTE

- **HDD formatting is required after this setting. Therefore it is necessary to retrieve certain data from HDD in advance.**
  The following data will be lost after HDD formatting.
  ① Address data
  ② Authentication data : Authentication mode, user authentication setting, account track setting
  ③ Box setting data : Box and text in the box, setting information of each box, box for fax
  ④ Job history, fax transmission history

⚠ **And after setting the HDD encryption key, the movie data and OCR dictionary data need to be reinstalled as necessary since these data will be deleted by HDD format.**

⚠ • **If you replace the HDD due to its breakage or other reasons, you can automatically reset the encryption key by installing a new HDD and performing the logical format.**

(2) Procedure

1. Press [HDD Encryption Setting].
2. Enter encryption key (20 characters) with the keyboard on the operation panel and press [OK].

NOTE

- **Double-byte and identical characters are not acceptable.**

3. Turn off the main power switch and turn it on again more than 10 seconds after.
4. Open [Administrator Settings] and conduct HDD formatting according to the instruction appeared on the panel.
5. Turn off the main power switch and turn it on again more than 10 seconds after.

10.6.90 Security Settings-Function Management Setting

A. Each Function Setting

- It will be displayed only when the following setting shows that Vendor 2 or Management Device is mounted.
  [Service Mode] → [Billing Setting] → [Management Function Choice]

(1) Use

- To set whether to use management function for each item of [Copy], [PC print], [Send data] and [Print others].
  [Print others] is not displayed when vendor is connected.
- [ON] for [Send Data] will not be displayed when the optional image controller (IC-409) is mounted.
- To set whether to use Management function for each item of [Copy], [PC print], [Send data] and [Print others].
  [Print others] is not displayed when Vendor is connected.

(2) Procedure

- The default setting is ON.

"ON" OFF Prohibit

B. Max Copy Set

- It will be displayed only when the following setting shows that vendor is mounted.
  [Service Mode] → [Billing Setting] → [Management Function Choice]

(1) Use

- To set the upper limit of the number of copy or PC print when management function has been set.

(2) Procedure

- The default setting is 9999.

1 to "9999"

C. Network Function Usage Settings

(1) Use

- To set whether to enable or disable applications that use the network.
- Not to use the network function whose counter is difficult to be managed when management function has been set.
- The following are target functions.
  PC-FAX transmission/Using the HDD TWAIN driver to view and retrieve documents in user boxes/Using PageScope Box Operator to view and retrieve documents in user boxes/Using PageScope Scan Direct to retrieve documents in user boxes/Using PageScope Job Spooler to view and retrieve documents in user boxes/Box operations using the PageScope Web Connection

(2) Procedure

- The default setting is ON.

"ON" OFF

NOTE

- **However, when the vendor or management device setting in the Service Mode is set, this setting is set to OFF.**
  Exercise caution since it will stay in "OFF" setting even when "unset" is selected on vendor or management device setting in Service Mode later.

D. Authentication Time Setting

- It will be displayed only when the following setting shows that authentication device 1 is mounted.
  [Service Mode] → [Billing Setting] → [Management Function Choice]

(1) Use

- To set the authentication mode when authentication device is used.
- To change the authentication mode when authentication device is used.
  Keep Card : Authentication is available leaving the card in the given place when making authentication with the device.
  Touch and Print : Card is placed only when authentication is made with the device and if the card is left for a given time (authentication reset time) the authentication setting is reset.
- When selecting “Touch and Print”, authentication reset is set after completing the job in [Authentication Time].

(2) Procedure

<Authentication Method>

- The default setting is Touch and Print.

Keep Card	“Touch and Print”

<Authentication Time>

- The default setting is 1 min.

1 to 30 min.

<Authentication Log-out When Job is Completed>

- The default setting is Yes.

“Yes”	No

10.6.91 Security Settings-Stamp Settings

A. Apply Stamps

(1) Use

- Selects whether to add a stamp to documents when jobs are printed or fax/scanned data is sent.

(2) Procedure

- The each default setting is Do Not Apply.

Apply	“Do Not Apply”

- Touch “Apply” to make stamp settings independently for print and transmission modes.

B. Delete Registered Stamp

(1) Use

- Deletes registered stamps, and copy protect/repeat stamps.

(2) Procedure

1. Touch [Delete Registered Stamp].
2. Select [Stamp] or [Copy Protect/Stamp Repeat].
3. Select [Yes] on the confirmation screen and touch [OK] to delete the registered stamps.

10.6.92 Security Settings-Image Log Transfer Settings

- It will be displayed when the following setting shows that switch No.63 is set to [01] at HEX assignment.
  [Service Mode] → [System 2] → [Software Switch Setting]

A. Use

- Specifies whether to transfer the input or output image data to the server using whenever MFP inputs or outputs image data.
  Makes the settings of the WebDAV server or the FTP server where image data are transferred.
- Use this settings to keep logs of input and output image data for security purpose.

B. Procedure

- The each default setting is No.

Yes	"No"

- When selecting [Yes], make the settings of the server where data are transferred.
- Set the following item.

<WebDAV Server setting>

- Host Name, File Path, User Name, Password, Port Number, Proxy, SSL Setting.

<FTP Server setting>

- Host Name, File Path, User Name, Password, Port Number, PASV, and Proxy.

10.6.93 Security Settings-Driver Password Encryption Setting

A. Use

- To set whether to use the factory default encryption word or user-defined one as a common key that encrypts a password used for a print job.
  User-Defined : Sets an encryption word. Enter an encryption word of 20 letters.
  Use Factory Default: Uses the factory default encryption word (undisclosed predefined encryption key).

NOTE

- **When selecting [User-Defined], set an encryption key being consisted of the same letters in the printer driver. If the encryption word set in the main body differs from the encryption key set in the printer driver, different encrypted passwords are created and printing cannot be made.**
- **The use of OpenAPI allows an encryption key to be obtained from the main body.**

B. Procedure

- The default setting is Use Factory Default.

User-Defined	"Use Factory Default"

10.6.94 License Settings-Get Request Code

A. Use

- To display and print a request code and serial number used to activate i-Option.
- Used to confirm the request code and serial number.

B. Procedure

1. Touch [Get Request Code], and [Yes].
2. A serial number and request code are issued.
3. By touching [Print], the serial number and request code are printable.

10.6.95 License Settings-Install License

- This is displayed only when the additional memory included in the optional upgrade kit UK-203 is installed.

A. Use

- To allow administrator to activate functions provided by i-Option.
- Used when administrator activates functions provided by i-Option.
- By selecting a desired function and entering the corresponding license code, the function can be activated.
- By making settings in [Service Mode] → [Billing Setting], CE can also activate functions provided by i-Option.

B. Procedure

1. Touch [Install License].
2. Touch [Select Function].
3. Select i-Option function to be activated, and touch [Yes].
4. Touch [OK].
5. Touch [License Code].
6. Enter the license code that was issued in the license management server using the key board on the control panel, and touch [OK].
7. Touch [Install] key.
8. Confirm the message, select [Yes], and touch [OK].
9. Turn OFF and ON the main power switch.

10.6.96 License Settings-List of Enabled Functions

- This is displayed only when the additional memory included in the optional upgrade kit UK-203 is mounted.

A. Use

- To display currently activated functions.
- Used to check the functions that are activated now.

10.6.97 OpenAPI Authentication Management-Restriction Code Setting

A. Use

- These are communication settings for the application which is developed by the third vendor.
  Do not set or change these settings without vendor's instructions.

10.7 My Panel Settings

- This is displayed only when a registered user is logging in after user authentication. However, this is not displayed when both management device 2 and user authentication are used.

A. Use

- To make various settings about My Panel.
- To customize My Panel screen for individual registered users.
- Items that can be set are as follows:
  Language Setting, Measurement Unit Setting, Copier Settings, Scan/Fax Settings, Color Selection Setting, Main Menu Settings, and Initial Screen Setting

B. Procedure

1. Touch [My Panel Settings].
2. Touch a key that represents a desirable item and change its settings.

NOTE

- **Registering, editing, and deleting My Panel settings are allowed only when logging in as a registered user.**
- **When My Panel is not customized, the settings for MFP take effect in the three of the control panel settings, Language setting, Measurement unit setting, and Color selection setting.**
- **Depending on the functions provided by each MFP and the optional device configuration, not all My Panel settings may not take effect.**

10.8 Device Information

A. Use

- To display the function version of the firmware installed in MFP and the IP address.

B. Procedure

- Touch [Device Information] to check the function version and IP address.

<About function version>

Function version / Model	Version 1	Version 2	Version 3
bizhub 423/363/283/223	—	—	Initial firmware
bizhub C652/C552	Initial firmware	Function enhancement 1	Function enhancement 2
bizhub C452	—	Initial firmware	Function enhancement 2
bizhub C652DS/C552DS	—	—	Initial firmware
bizhub C360/C280/C220	—	Initial firmware	Function enhancement 2

10.9 Meter Count

10.9.1 Counter details

A. Meter Count

- You can check the total number of pages printed after the counting start date.

Total	To check the total number of printed pages.
Black	To check the total number of pages printed in Black mode.

B. Copy

- To check the total number of pages copied.
- This value includes the number of pages on which data saved in a User Box in copy mode is printed, and the number of pages list-output in [Administrator Settings].

	Total	Large Size *	Total (Copy + Print)
Black	Indicates the total number of pages copied in Black mode	Indicates the total number of pages copied on large-size paper in Black mode	Indicates the total number of pages copied in Black mode and that of pages printed in Black mode through a computer

*: The large size setting is configured in [Service Mode] → [Billing Setting] → [Counter Setting].

C. Print

- Check the total number of pages printed through a computer.

	Total	Large Size *	Total (Copy + Print)
Black	Indicates the total number of pages printed in Black mode	Indicates the total number of pages printed on large-size paper in Black mode.	Indicates the total number of pages copied in Black mode and that of pages printed in Black mode through a computer

*: The large size setting is configured in [Service Mode] → [Billing Setting] → [Counter Setting].

D. Scan/Fax

- Check the total number of original pages scanned in the Scan/Fax or User Box mode.
- Check the total number of pages on which a file in a User Box or a received file is printed.
- Check the total number of pages sent and received in the fax mode.

	Total	Large Size *1
Black	Indicates the total number of pages on which a file in a User Box or a received file is printed in Black mode *2	Indicates the total number of pages on which a file in a User Box or a received file is printed on large-size paper in Black mode *2
Scans	Indicates the total number of original pages scanned in the Scan/Fax and User Box modes	Indicates the total number of large-size original pages that are scanned in the Scan/Fax and User Box modes.
Fax TX	Indicates the total number of pages in a sent fax (G3)	—
Fax RX	Indicates the total number of pages in a received fax (G3)	—

*1: The large size setting is configured in [Service Mode] → [Billing Setting] → [Counter Setting].
*2: In the Memory RX mode, pages are counted when printed.

E. Other

- Check the total number of scanned and printed original pages, total number of printed sheets, and total number of pages printed on both sides regardless of functions.

Original Counter	To check the total number of original pages that are scanned and printed in the Copy, Print, and Scan/Fax modes *
Paper Counter	To check the total number of sheets that are printed in the Copy, Print, and Scan/Fax modes *
Total Duplex	To check the total number of pages printed on both sides

*: If a file is saved in a User Box, its pages are not counted unless they are printed. Report or list output pages are not targeted for counting.

F. Print List

- The counter list is printed.

(1) Procedure

1. Touch [Print List].
2. Select a paper tray
3. Select 1-Sided or 2-Sided, and touch [Start] or press the Start key.

G. Coverage Rate

- This is not displayed when [Service Mode] → [System 2] → [Coverage Rate Screen] is set to “Do Not Display.”
- The coverage rate can be cleared in [Service Mode] → [Billing Setting] → [Coverage Rate Clear].

(1) Use

- The coverage rate does not match the actual amount of toner used but only an indication.
- The coverage rate is the average printing dot percentage with A4 paper area as 100 %.
- The coverage rate displays the printing dot accumulated average (calculated in A4) for copy, printer, and fax/scan in unit of 0.001 %.
- The coverage rate is calculated from all output excluding the following items.

<Items excluded in the calculation>

- Output of meter counter list
- Output in service mode
- Output automatically performed by MFP such as image stabilization pattern

Blank Page

11. ADJUSTMENT ITEM LIST

Adjustment/setting items				Replacement part/Service job	No	Replace paper feed roller	Replace separation roller assy	Change marketing area	Install LCT	Replace CCD unit	Replace mirror unit	Replace developing unit	Replace drum unit	Replace developer	Replace transfer roller unit
Service Mode	Machine	Printer Area	Leading Edge Adjustment		1										
			Printer Image Centering Side 1		2				❍						
			Paper Feed Direction Adj.		3					(3)	(3)				
		Scan Area	Image position: Leading Edge		4										
			Scanner Image Centering		5					(5)					
			Main Scan Zoom Adj.		6					(4)					
			Sub Scan Zoom Adj.		7						(4)				
		Org. Detecting Sensor Adj.			8			❍							
	Touch Panel Adjust				9										
	State Confir-mation	Memory/HDD	HDD R/W Check		10										
			HDD Format		11										
		Table Number			12										
	Firmware Version				13										
	System 1/2	Re-entry of setting values			14										
		Serial Number			15										
		CDD Calibration			16					(1)					
		Line Mag Setting			17					(2)					
	Counter	Life	Clear counter		18	❍	❍					(2)	(1)	(2)	❍
	Image Process Adjustment		Gradation Adjust		19							(4)	(2)	(4)	
			TCR Level Setting		20							(3)		(3)	
	Memory/HDD Adj.		SSD -> HDD Data Copy		21										
	ADF		Read Pos Adj		22						(2)				
			Original Tray Width		23										
			Mixed Original Size adjustment		24										
	Enhanced Security		NVRAM Data Backup		25										
Administrator Settings			Drum Dry		26							(1)		(1)	
Re-entry of Utility settings					27										
Re-entry of Enhanced Security settings					28										
Exposure unit/Mirrors unit positioning					29						(1)				
Scanner motor belt adjustment					30										
F/W upgrading					31										
Installation of original size sensor					32										
Remounting of NVRAM (MFP board)					33										
Remounting of EEPROM (Printer control board)					34										

- This table shows the adjustment items that are required when a part of the machine has been replaced. Priority order, if applicable, during the adjustment procedures is indicated by the corresponding number in the parentheses.

No	Replace fusing unit	Replace ozone filter	Replace paper dust remover	Replace PH unit	Replace original size detection sensor	Wind scanner drive cables	Replace scanner motor	Replace exposure unit	Replace scanner home sensor	Replace printer control board	Replace MFP board	Replace original glass	Replace hard disk	Install hard disk	Execute initialize	Execute add. option	Execute F/W update	Add fax board	Replace DF control board
1				(1)															
2				(2)															
3																			
4												(2)							
5									❍			(1)							
6																			
7						(4)	(2)	(3)											
8					(3)														
9															(6)				
10													(2)						
11													(1)						
12					(2)										(2)				
13																❍	❍		
14															(4)				
15															(3)				
16																			
17																			
18	❍	❍	❍																
19											(3)								
20																			
21														❍					
22						(3)		(2)											
23																			(2)
24																			(3)
25											(4)								
26																			
27															(1)				
28															(5)				
29						(2)		(1)											
30						(1)	(1)												
31										(2)	(2)							❍	(1)
32					(1)														
33											(1)								
34										(1)									

12. SERVICE MODE

12.1 List of service mode

✻ The function tree is shown to comply with the format displayed on the screen.

Service Mode			Ref. Page
Machine	Fusing Temperature		P.363
	Org. Size Detecting Sensor Adj.		P.364
	Printer Area	Leading Edge Adjustment	P.365
		Printer Image Centering Side 1	P.366
		Leading Edge Adj. Side 2 (Duplex)	P.367
		Prt. Image Center. Side 2 (Dup)	P.368
		Paper Feed Direction Adj.	P.369
		Tray Printing Position: Tip	P.370
	Scan Area	Image Position: Leading Edge	P.372
		Scanner Image Centering	P.373
		Main Scan Zoom Adj.	P.374
		Sub Scan Zoom Adj.	P.375
	Printer Reg. Loop Adj.		P.376
	Manual Bypass Tray Width Adj		P.376
	Lead Edge Erase Adjustment		P.377
	ADF Scan Glass Contamination		P.377
	Non-Image Area Erase Check		P.378
	Cooling Fan Stop Delay		P.378
	Fusing Productivity Choice		P.378
	Print Interval Extension		P.379
Firmware Version			P.379
Imaging Process Adjustment	Gradation Adjust		P.380
	Max Image Density Adj		P.382
	TCR Level Setting		P.382
	Image Background Adj		P.383
	Transfer Voltage Fine Adj		P.383
	TCR Sensor Adjust		P.384
	Paper Separation Adjustment	Paper separation adjustment	P.384
		Paper Separation Voltage Adjust	P.385
	Manual Toner Add		P.385
	Dot Enhancement		P.385
CS Remote Care			P.386

Service Mode				Ref. Page
System 1	Marketing Area			P.417
	Tel/Fax Number			P.418
	Serial Number			P.418
	Sleep ON/OFF Choice Setting			P.419
	Foolscap Size Setting			P.419
	Original Size Detection			P.419
	Install Date			P.420
	Initialization	Clear All Data		P.420
		Clear Individual Data	Copy Program Data	P.421
			Address Registration Data	P.421
			Fax Setting Data	P.421
			All History Data	P.422
			Network Setting Data	P.422
		System Error Clear		P.422
	Problem Unit Isolation Set.			P.423
	Machine State LED Setting			P.424
System 2	HDD			P.425
	Image Controller Setting			P.426
	Option Board Status			P.426
	Consumable Life Reminder			P.427
	Unit Change			P.427
	Software Switch Setting			P.428
	CDD Calibration			P.428
	LCT Paper Size Setting			P.429
	Line Mag Setting			P.429
	Data Capture			P.429
	ADF Scan Glass Contamin. Set.			P.432
	Stamp			P.433
	Network Fax Settings			P.433
	User Paper Settings			P.434
	Coverage Rate Screen			P.435
	JAM Code Display Setting			P.435
	Boot up Screen			P.435
	Install Data			P.437
	Bluetooth Settings			P.437
	Auto Drum Dry			P.437

Service Mode			Ref. Page
Counter	Life		P.438
	Service Call		P.439
	Section Service Call		P.439
	Warning		P.439
	Maintenance		P.440
	Service Total		P.440
	Counter Of Each Mode		P.441
	Service Call History (Data)		P.441
	ADF Paper Pages		P.441
	Paper Jam History		P.441
	Fax Connection Error		P.441
	ADF Scan Glass Contamin. Counter		P.442
	Jam		P.442
	Section JAM		P.442
	Counter Reset		—
List Output	Batch List CSV Output		P.443
	Machine Management List		P.443
	Adjustments List		P.444
	Parameter List		P.445
	Service Parameter		P.446
	Protocol Trace	Last	P.448
		Error	
	Fax Setting List		P.449
	Fax Analysis List		P.454
State Confirmation	Sensor Check		P.454
	Table Number		P.468
	Level History1		P.468
	Level History2		P.468
	Temp. & Humidity		P.468
	CCD Check		P.469
	Memory/HDD Adj.	Memory Check	P.469
		Compress / Decompression Check	P.470
		JPEG Check	P.470
		Memory Bus Check	P.470
		DSC Bus Check	P.471
		HDD R/W Check/SSD R/W Check	P.471
		HDD Format/SSD Format	P.472
		SSD -> HDD Data Copy	P.473
	Memory/HDD State		P.474
	Adjustment Data List		P.474

Service Mode			Ref. Page
Test Mode	Gradation Pattern		P.475
	Halftone Pattern		P.476
	Lattice Pattern		P.477
	Paper Passage Test		P.477
	Fax Test		P.478
ADF	Original Stop Position *8		P.481
	Registration Loop Adj. *8		P.482
	Auto Stop Position Adjustment *8		P.483
	Paper Passage *8		P.485
	Sensor Check *8		P.486
	Original Tray Width *8		P.488
	Read Pos Adj *8	Read Pos Adj *8	P.489
		Auto Adjust *8	
	Feed Zoom *8	Orig. Feed Zoom Ad *8	P.491
		Auto Adjust *8	P.491
	Scanning Light Adjustment *8		P.492
	Mixed Original Size adjustment *8		P.492
	FD-Mag. Adj. (B) *8	Orig. Feed Zoom Ad. *8	P.493
		Auto Adjust *8	P.493
FAX *1	Line 1 *1	Modem/NCU *1	P.494
		NetWork *1	P.498
		System *1	P.500
		Fax File Format *1	P.503
		Communication *1	P.503
		List Output *1	P.507
		Function Parameter *1	P.507
		Initialization *1	P.533
	Line 2 *2	Modem/NCU *2	P.494
		Network *2	P.498
		Communication *2	P.503
		Initialization *2	P.533
Finisher *3	FS-FN adjustment *3	Center Staple Position *3	P.534
		Half-Fold Position *3	P.535
		Punch Edge Adj *3	P.536
		Punch Regist Loop Size *3	P.537
		Finisher Components Test Mode *4	P.537
		Load Data *4	P.539
		Alignment Plate Position *5	P.539
		Paper Alignment Guides W. Adj. *3	P.539
	Punch Option setting		P.540
	Job Separator *6		P.540

Service Mode		Ref. Page
Internet ISW	Internet ISW Set	P.541
	HTTP Setting *7	P.541
	FTP Setting *7	P.542
	Forwarding Access Setting *7	P.543
	Download *7	P.544

*1: It will be displayed only when the optional fax kit (FK-508) line 1 is mounted.
*2: It will be displayed only when the optional fax kit (FK-508) line 2 is mounted.
*3: It will be displayed only when the optional finisher (FS-527) is mounted.
*4: It will be displayed only when the optional finisher (FS-527/529) is mounted.
*5: It will be displayed only when the optional finisher (FS-529) is mounted.
*6: It will be displayed only when the optional separator (JS-505) is mounted.
*7: It will be displayed only when the [Internet ISW Set] is set to “ON.”
*8: It will be displayed only when the reverse automatic document feeder DF-621 is mounted.

12.2 Starting/Exiting

12.2.1 Starting procedure

NOTE

- **Ensure appropriate security for Service Mode function setting procedures. They should NEVER be shown to any unauthorized person not involved with service jobs.**

A. Procedure

1. Press the Utility/Counter key.
2. Touch [Details] on meter count display.
3. Press the following keys in this order.; Stop → 0 → 0 → Stop → 0 → 1

NOTE

- **When selecting [CE Authentication] under [Enhanced Security] available from Service Mode, authentication by CE password is necessary.**
  Enter the 8 digits CE password, and touch [END].
  (The initial setting for CE password is "92729272.")
- **When the following setting is set to "ON", CE password authentication is necessary; [Administrator Settings] → [Security Settings] → [Enhanced Security Mode]**
- **If a wrong CE password is entered, re-enter the right password. The machine will not enter Service Mode unless the CE password is entered correctly. To return to the basic screen, turn OFF the sub power switch and turn it ON again.**
  When the following setting is set to "Mode 2", operation will be prohibited since it indicates authentication failure by failing to enter the correct CE password within the specified number of times.
  if the access lock is activated, the lock release timer starts to operate by input the Stop → 0 → 9 → 3 → 1 → 7 in [Meter Count] → [Check Details] → [Coverage Rate] after the main power switch is turned OFF and On. When the timer reaches the time specified in this setting, the access lock is released.
- **The service code entered is displayed as "∗."**

4. The Service Mode menu will appear.

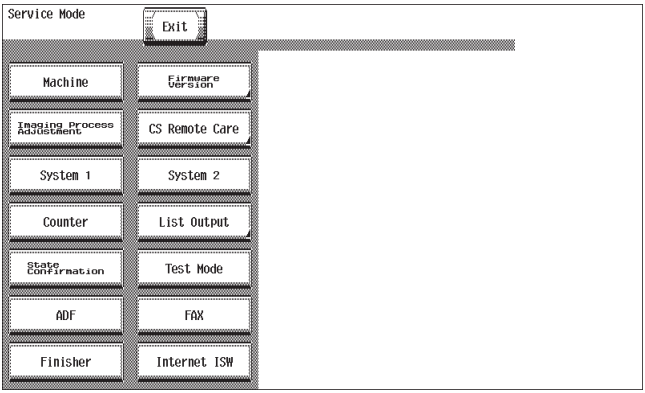

A0P0F3E545DA

NOTE

- **Be sure to change the CE password from its default value.**
- **For the procedure to change the CE password, see the Enhanced Security.**
  See P.545

B. Exiting procedure

- Touch the [Exit] key.

NOTE

- **If you change settings or adjustment values in the Service Mode and exit the mode, be sure to turn OFF the main power switch, wait 10 seconds or more, and turn it ON again.**

12.3 Date/Time Input mode

A. Use

- This mode is used to set time-of-day and date.

B. Procedure

1. Call the Service Mode to the screen.
2. Press the following keys in this order.
   Stop → 1 → 1 → 4 → 4 → Clear
3. Enter year, month, day, hour, and minute, in that order, from 10-key pad.
   (Year 4 digits → Month 2 digits → Day 2 digits → Hour 2 digits → Minute 2 digits)

NOTE

- **Before entering date and time, press the Clear key to delete the present time from the place where data and time is entered.**
- **When setting the month, day, hour, or minute, enter “0” first if the data one digit.**

4. Make sure that correct figures have been entered and then touch [Entry].
5. Touch [END] to return to the Service Mode.

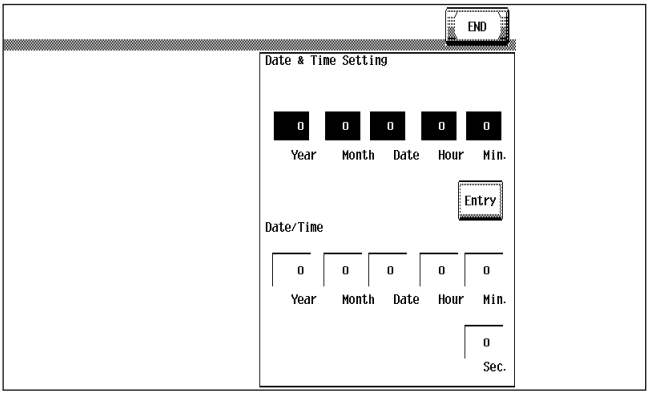

A00JF3E537DA

12.4 Machine

12.4.1 Fusing Temperature

A. Use

- To adjust individually the temperature of the heating roller for each type of paper, thereby coping with varying fusing performance under changing environmental conditions.
- When fusing performance is poor, or wax streak or offset occurs when the type of paper is changed or environmental conditions change.
- Use when the curling of the paper due to the paper type or environmental change occurred, or when the paper jam, as well as stapling or folding position error occurred due to the curling of the paper.
- By setting the temperature higher (+), gloss of print can be improved.
- By setting the temperature lower (-), exit roller mark can be reduced.

<Adjustment range>

Paper type	Setting range	step
Plain Paper	-20 °C to +10 °C	5 °C
OHP Film	-20 °C to +10 °C	5 °C
Thick1/Envelope (post card, letter head)	-20 °C to +10 °C	5 °C
Thick2	-20 °C to +10 °C	5 °C

B. Procedure

1. Call the Service Mode to the screen.
2. Touch these keys in this order: [Machine] → [Fusing Temperature].
3. Select the paper type.
4. Enter the new setting from the [+] / [-] key.
   If fusing performance is poor, increase the setting.
   If wax streaks occur, decrease the setting.
   If offset is poor, decrease the setting.
   If curling of the paper occurs, decrease the setting.
5. Touch [END] to validate the adjustment value.
6. Return to the basic screen.
7. Output two or three test printing and check to see whether the image has any problem.
8. Make the adjustment for each type of paper.

12.4.2 Org. Size Detecting Sensor Adj.

A. Use

- To automatically adjust the original detection distance for the original size detection sensor/1.
- To display if the original size detection sensor/2 is mounted.
- When the sensor is replaced with a new one.
- When an optional sensor has been added.
- When an erroneous original size detection is made.
- When the marketing area setting is changed.

B. Procedure

1. Place a blank sheet of A3 or 11 x 17 paper on the original glass and lower the original cover.
2. Call the Service Mode to the screen.
3. Touch these keys in this order: [Machine] → [Org. Size Detecting Sensor Adj.].
4. Press the Start key.

If the adjustment has been successfully made, it completes the adjustment procedure.
If the adjustment has turned out to be unsuccessful, check the optional original size sensors for correct installation and change the defective sensor or harness.

12.4.3 Printer Area-Leading Edge Adjustment

A. Use

- To vary the print start position in the sub scan direction for each of different paper types. (to adjust the timing starting from the roller connection up to start of transfer output)
- The PH unit has been replaced.
- The paper type has been changed.
- The print image deviates in the sub scan direction.
- A faint image occurs on the leading edge of the image.
- This setting can be made independently for plain paper, Thick 1, Thick 2, OHP films, and envelopes.

B. Procedure

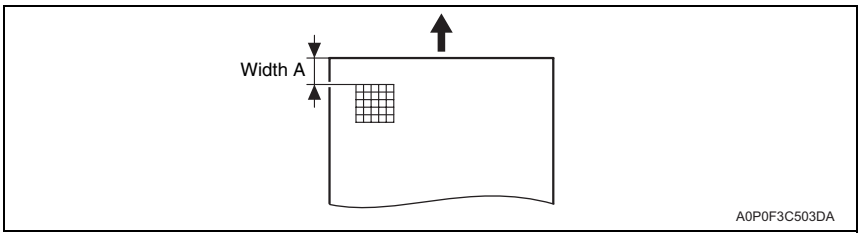

- Width A on the test pattern produced should fall within the following range.

Specifications: 4.2 ± 0.5 mm

1. Place A3 paper on the manual bypass tray.
2. Call the Service Mode to the screen.
3. Touch [Machine] → [Printer Area] → [Leading Edge Adjustment].
4. Select the [Plain Paper].
5. Press the Start key to let the machine produce a test print.
6. Check the dimension of width A on the test print.
7. If width A falls outside the specified range, change the setting using the [+] / [-] key.
   If width A is longer than the specifications, make the setting value smaller than the current one.
   If width A is shorter than the specifications, make the setting value greater than the current one.
8. Press the Start key to let the machine produce a test print.
9. Check the dimension of width A on the test print.
10. If width A is outside the specified range, change the setting again and make a check again.
11. If width A falls within the specified range, touch [END].
12. Following the same procedure, adjust for Thick 1/2, OHP film, and Enve.

12.4.4 Printer Area-Printer Image Centering Side 1

A. Use

- To vary the print start position in the main scan direction for each paper source.
- The PH unit has been replaced.
- A paper feed unit has been added.
- The print image deviates in the main scan direction.

B. Procedure

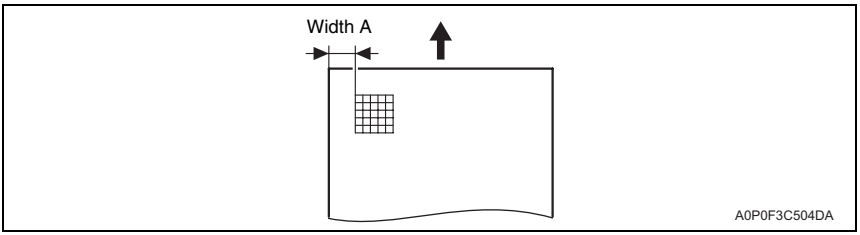

- Width A on the test pattern produced should fall within the following range.

Specifications: 3.0 ± 0.5 mm

1. Call the Service Mode to the screen.
2. Touch [Machine] → [Printer Area] → [Printer Image Centering Side 1].
3. Select the paper source to be adjusted.
4. Press the Start key to let the machine produce a test print.
5. Check the dimension of width A on the test print.
6. If width A falls outside the specified range, change the setting using the [+] / [-] key.
   If width A is longer than the specifications, make the setting value smaller than the current one.
   If width A is shorter than the specifications, make the setting value greater than the current one.
7. Press the Start key to let the machine produce a test print.
8. Check the dimension of width A on the test print.
9. If width A is outside the specified range, change the setting again and make a check again.
10. If width A falls within the specified range, touch [END].
11. Following the same procedure, adjust for all other paper sources.
    (Use A4 or 8 $^1/_2$ x 11 plain paper for the bypass.)

12.4.5 Printer Area-Leading Edge Adj. Side 2 (Duplex)

A. Use

- For plain paper, this function allows the adjustment of the image write start position in the sub scan direction on the 2nd side of duplex printing.
  (to adjust the timing starting from the roller connection up to start of 2nd transfer output)
- The adjustment is made for the paper feed from the manual bypass tray, but the changes made with this adjustment are applied to every paper feed tray.
- This adjustment is made when the image on the 2nd side of paper deviates from the original position in the sub scan direction.

B. Procedure

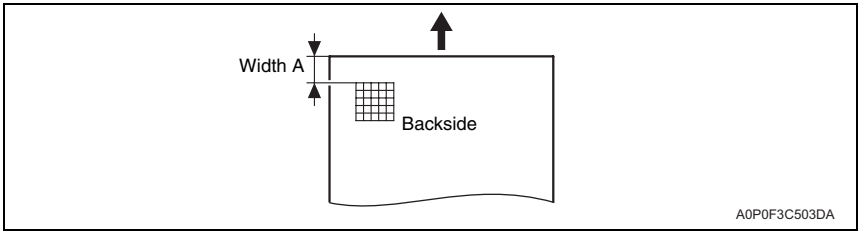

- Width A on the test pattern produced should fall within the following range.
- For measurement, use the image produced on the backside of the test pattern.

Specifications: 4.2 ± 0.5 mm

1. Place A3 paper on the tray.
2. Call the Service Mode to the screen.
3. Touch [Machine] → [Printer Area] → [Leading Edge Adj. Side 2 (Duplex)].
4. Press the Start key to let the machine produce a test print.
5. Check the dimension of width A on the test print.
6. If width A falls outside the specified range, change the setting using the [+] / [-] key.
   If width A is longer than the specifications, make the setting value smaller than the current one.
   If width A is shorter than the specifications, make the setting value greater than the current one.
7. Press the Start key to let the machine produce a test print.
8. Check the dimension of width A on the test print.
9. If width A is outside the specified range, change the setting again and make a check again.
10. If width A falls within the specified range, touch [END].

12.4.6 Printer Area-Prt. Image Center. Side 2 (Dup)

A. Use

- To vary the print start position in the main scan direction for each paper source in the 2-Sided mode.
- The image on the backside of the 2-sided copy deviates in the main scan direction.

B. Procedure

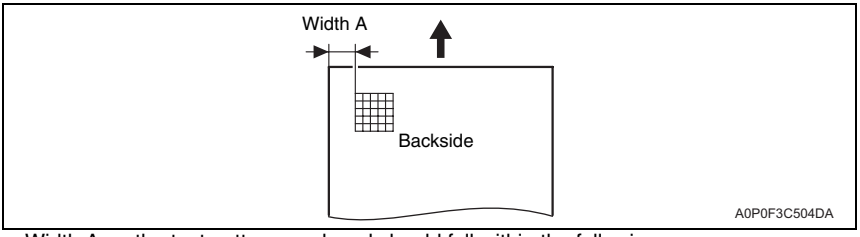

- Width A on the test pattern produced should fall within the following range.
- For measurement, use the image produced on the backside of the test pattern.

Specifications: 3.0 ± 0.5 mm

1. Call the Service Mode to the screen.
2. Touch [Machine] → [Printer Area] → [Prt. Image Center. Side 2 (Dup)].
3. Select the paper source to be adjusted.
4. Press the Start key to let the machine produce a test print.
5. Check the dimension of width A on the test print.
6. If width A falls outside the specified range, change the setting using the [+] / [-] key.
   If width A is longer than the specifications, make the setting value smaller than the current one.
   If width A is shorter than the specifications, make the setting value greater than the current one.
7. Press the Start key to let the machine produce a test print.
8. Check the dimension of width A on the test print on the backside of the copy.
9. If width A is outside the specified range, change the setting again and make a check again.
10. If width A falls within the specified range, touch [END].
11. Following the same procedure, adjust for all other paper sources.
    (Use A4 or 8 1/2 x 11 plain paper for the manual bypass tray.)

12.4.7 Printer Area-Paper Feed Direction Adj.

A. Use

- To synchronize the paper transport speed with the image writing speed.
- [Sub Scan Zoom Adj.] becomes necessary.
- The print image on the copy distorts (stretched, shrunk).
- When the print image on the copy is stretched in the sub scan direction.
- This setting can be made independently for plain paper, Thick 1, Thick 2 and Envelope.

B. Procedure

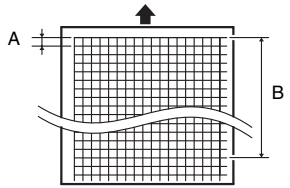

- Width A and width B on the test pattern produced should fall within the following ranges.
  Width A: equivalent to one grid
  Width B: equivalent to 48 grids

Specifications
A: 7.9 to 8.3
B: 389.1 to 392.1

1. Load manual bypass tray with A3 or 11 x 17 plain paper.
2. Call the Service Mode to the screen.
3. Touch [Machine] → [Printer Area] → [Paper Feed Direction Adj.].
4. Select [Plain Paper].
5. Press the Start key to let the machine produce a test print.
6. Check width A (equivalent to one grid) and width B (equivalent to 48 grids) on the test print.
7. Touch these keys in this order: [Machine] → [Printer Area] → [Paper Feed Direction Adj].
8. If width of A or B falls outside the specified range, change the setting using the [+]/[-] keys.
   If width A or B is longer than the specifications, make the setting value smaller than the current one.
   If width A or B is shorter than the specifications, make the setting value greater than the current one.
9. Press the Start key to let the machine produce a test print again.
10. Check width A and width B on the test print.
11. If width A or B falls outside the specified range, change the setting value and make a check again.
12. If width A or B falls within the specified range, touch [END].
13. Following the same procedure, adjust for thick paper and envelope.

12.4.8 Tray Printing Position: Tip

A. Use

- To change and adjust image printing position at vertical scanning direction by each feed. (to adjust the timing starting from the roller connection up to start of transfer output). It is not applicable in case the job is fed at re-feed.
- To be used when [Printer Area-leading Edge Adjustment] is not enough for full adjustment (as such case that image printing position gets deviated due to pattern of each feed.)
- Setting is available according to feed of 1st. Short (the length of paper at vertical scanning direction is under 276.4 mm), 1st. Long (the length of paper at vertical scanning direction is over 276.4 mm), 2nd/3rd/4th and manual.
- Adjustment is made for plain paper.

B. Procedure

NOTE

- **[Printer Area-leading Edge Adjustment] should be made within specification.**
- **Image printing position at vertical scanning direction is adjusted based on the combination value of this setting figure and [Printer Area-leading Edge Adjustment] figure. In case the value is larger than +3.0mm or less than -3.0mm, the figure should be rounded to 3.0mm or -3.0mm.**

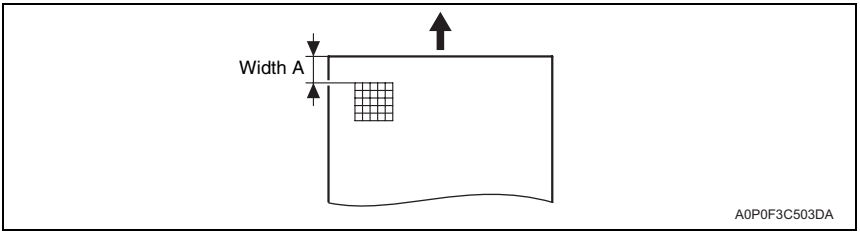

- Width A on the test pattern produced should fall within the following range.

Specifications: 4.2 ± 0.5 mm

1. Call the Service Mode to the screen.
2. Touch [Machine] → [Printer Area] → [Tray Printing Position: Tip].
3. Set plain paper to the targeted tray, and select the feed tray.
4. Press the Start key to let the machine produce a test print.
5. Check the dimension of width A on the test print.
6. If width A falls outside the specified range, change the setting using the [+] / [-] key.
   If width A is longer than the specifications, make the setting value smaller than the current one.
   If width A is shorter than the specifications, make the setting value greater than the current one.
7. Press the Start key to let the machine produce a test print.
8. Check the dimension of width A on the test print.
9. If width A is outside the specified range, change the setting again and make a check again.
10. If width A falls within the specified range, touch [END].

12.4.9 Scan Area

- Use the following test chart for the adjustment of the scanner section.
- If the test chart is not available, a scale may be used instead.

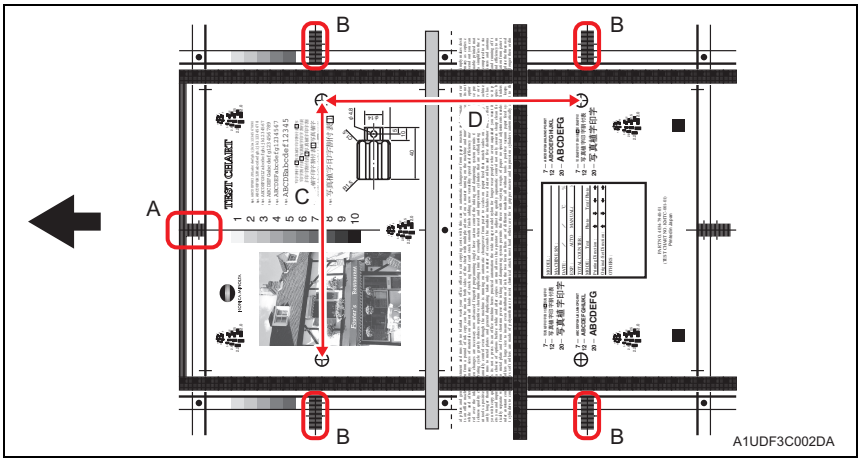

Adjustment item	Ref.
A: Image Position: Leading Edge	P.372
B: Scanner Image Centering	P.373
C: Main Scan Zoom Adj.	P.374
D: Sub Scan Zoom Adj.	P.375

12.4.10 Scan Area-Image Position: Leading Edge

A. Use

- To adjust variations in mounting accuracy and sensitivity of the scanner home sensor and in mounting accuracy of the original width scale by varying the scan start position in the main scan direction.
- When the original glass is replaced.
- When the original width scale is replaced.
- The scanner home sensor has been replaced.

B. Procedure

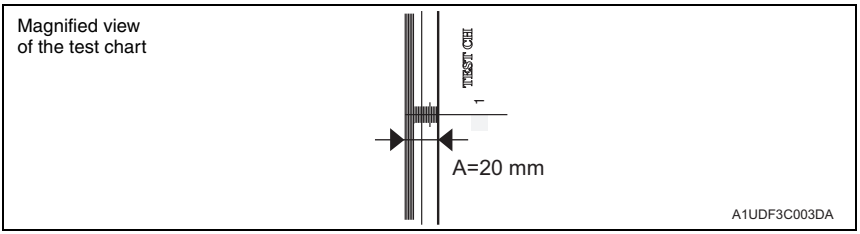

- A width on the test chart and one on the test print are measured and adjusted so that the difference of A width satisfies the specifications shown below.
- An adjustment must have been completed correctly of [Leading Edge Adjustment] of [Printer Area].

Specifications
A: ± 0.5 mm (10 ± 0.5 mm if a scale is used)

1. Call the Service Mode to the screen.
2. Touch these keys in this order: [Machine] → [Scan Area] → [Image Position: Leading Edge].
3. Position the test chart correctly so that the original reference point is aligned with the scale.
4. Press the Start key to make a copy.
5. Check point A on the test print.
6. If width A on the test print falls outside the specified range, change the setting using the [+] / [-] key.
   If the test print is less than the specified length, increase the setting value.
   If the test print exceeds the specified length, decrease the setting value.
7. Press the Start key to make another test print.
8. Check the image on the test print to see if the specifications are met.
9. Make adjustments until the specifications are met.

12.4.11 Scan Area-Scanner Image Centering

A. Use

- To adjust part-to-part variations in accuracy of scanner parts and their mounting accuracy by varying the scan start position in the main scan direction.
- When the CCD unit is replaced.
- When the original glass is replaced.
- The scanner home sensor has been replaced.

B. Procedure

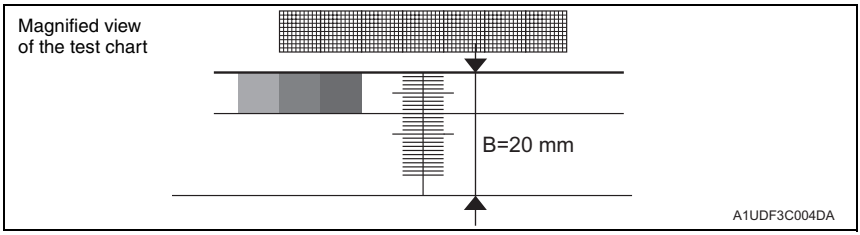

- B width on the test chart and one on the test print are measured and adjusted so that the difference of B width satisfies the specifications shown below.
- An adjustment must have been completed correctly of [Printer Image Centering Side 1] of [Printer Area].

Specifications
B: ± 1.0 mm

1. Call the Service Mode to the screen.
2. Touch these keys in this order: [Machine] → [Scan Area] → [Scanner Image Centering].
3. Position the test chart correctly so that the original reference point is aligned with the scale.
4. Press the Start key to make a copy.
5. Check point B on the image of the test print.
6. If the test print falls outside the specified range, change the setting using the [+] / [-] key.
   If the test print is less than the specified length, increase the setting value.
   If the test print exceeds the specified length, decrease the setting value.
7. Press the Start key to make a test print.
8. Check point B of the image on the test print to see if the specifications are met.
9. Make adjustments until the specifications are met.

12.4.12 Scan Area-Main Scan Zoom Adj.

A. Use

- To adjust the zoom ratio in the main scan direction for the scanner section.
- The CCD unit has been replaced.

B. Procedure

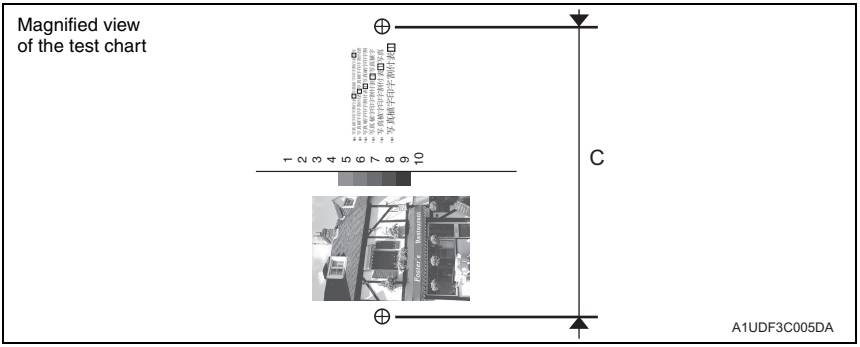

- Measure C width on the test chart and on the test print, and adjust the gap to be within the following specification.
- An adjustment must have been completed correctly of “Paper Feed Direction Adj.” of [Printer Area].

Specifications
C: ± 1.0 mm

* Standard size when using a scale: 200.0 mm

1. Call the Service Mode to the screen.
2. Touch these keys in this order: [Machine] → [Scan Area] → [Main Scan Zoom Adj.].
3. Position the test chart correctly so that the original reference point is aligned with the scale.
4. Press the Start key to make a test print.
5. Check the C width on the image of the copy.
6. If the test print falls outside the specified range, change the setting using the [+] / [-] key.
   If the C width on the test print is less than one on test chart, increase the setting.
   If the C width on the test print exceeds one on test chart, decrease the setting.
7. Press the Start key to make another test print.
8. Check the image on the test print to see if the specifications are met.
9. Make adjustments until the specifications are met.

12.4.13 Scan Area-Sub Scan Zoom Adj.

A. Use

- To adjust the zoom ratio in the sub scan direction for the scanner section.
- The exposure has been replaced.
- The scanner motor has been replaced.
- The scanner drive cables have been replaced.

B. Procedure

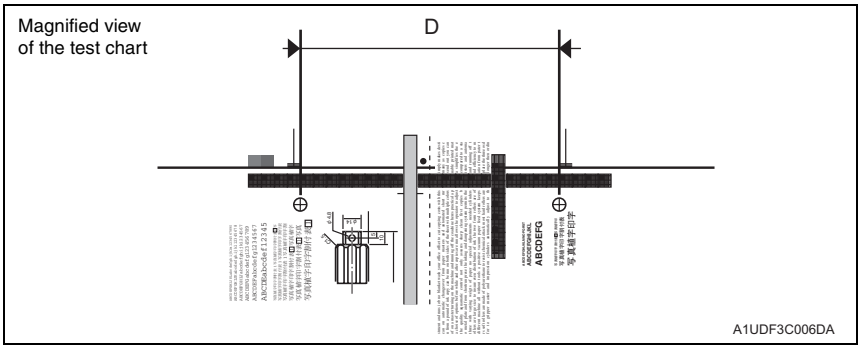

- Measure D width on the test chart and on the test print, and adjust the gap to be within the following specification.
- An adjustment must have been completed correctly of “Paper Feed Direction Adj.” of [Printer Area].

Specifications
D: ± 1.5 mm

* Standard size when using a scale: 200.0 mm

1. Call the Service Mode to the screen.
2. Touch these keys in this order: [Machine] → [Scan Area] → [Sub Scan Zoom Adj.].
3. Position the test chart correctly so that the original reference point is aligned with the scale.
4. Press the Start key to make a test print.
5. Check the D width on the image of the test print.
6. If the test print falls outside the specified range, change the setting using the [+] / [-] key.
   If the D width on the test print is less than one on test chart, increase the setting.
   If the D width on the test print exceeds one on test chart, decrease the setting.
7. Press the Start key to make another test print.
8. Check the image on the test print to see if the specifications are met.
9. Make adjustments until the specifications are met.

12.4.14 Printer Reg. Loop Adj.

A. Use

- To set the correction value of the paper loop length for each process speed of tray 1 to tray 4, LCT, bypass, and duplex.
- To adjust the length of the loop formed in paper before the registration rollers.
- Use “Paper Passage” for paper passage check.
- When a paper skew occurs.
- When a paper misfeed occurs.

B. Procedure

- The adjustable range is different depending on paper source.

	Tray 1/2	Tray 3/4 LCT	Manual	Duplex
173 mm/sec	-3 to +3	-6 to +6	-6 to +6	-6 to +6

1. Call the Service Mode to the screen.
2. Touch these keys in this order: [Machine] → [Printer Reg. Loop Adj.].
3. Select a paper source where the settings are made by touching the corresponding keys.
4. Enter the new setting from the 10-key pad.
   To decrease the loop amount: Decrease the setting value
   To increase the loop amount: Increase the setting value

12.4.15 Manual Bypass Tray Width Adj

A. Use

- To set the maximum width and the minimum width for the bypass paper width detection resistor of the manual bypass guide.
- Use when the bypass paper width detection resistor of the manual bypass guide has been changed.
- Use when a false paper size is displayed when the manual bypass is used.

B. Procedure

1. Call the Service Mode to the screen.
2. Touch these keys in this order: [Machine] → [Manual Bypass Tray Width Adj].
3. Touch [Max. Width].
4. Load the bypass tray with paper having a width of 297 mm.
5. Press the Start key and check that the results are [OK].
6. Touch [Min. Width.].
7. Load the bypass tray with paper having a width of 100 mm.
8. Press the Start key and check that the results are [OK].

✻ Make the adjustment again if the results are [NG].

12.4.16 Lead Edge Erase Adjustment

A. Use

- To set the leading edge erase amount of the paper.
- Upon user requests, it is possible to specify the void area where image is not printed along the leading edge.

B. Procedure

- The default setting is 4 mm.

"4 mm"	5 mm	7 mm

NOTE

- **When "4 mm" is selected, 4.2 mm is the actual amount to be erased in print based on the control system of the machine.**

12.4.17 ADF Scan Glass Contamination

A. Use

- To check the stain on the ADF original glass and display the result.
- To manually perform the pre-detection of the stain which is normally conducted when the main/sub power switch is turned ON, recovering from the sleep/low power mode, etc.
- [ADF Scan Glass Contamination] will be conducted with the detection level set by the following setting.
  [Service Mode] → [System 2] → [ADF Scan Glass Contamin. Set.] → [ADF Scan Glass Contamin. Sensitivity]
  When the above setting is set to "Not Set", "NG" will be displayed even though the pre-detection is conducted.

B. Procedure

1. Call the Service Mode to the screen.
2. Touch these keys in this order: [Machine] → [ADF Scan Glass Contamination].
3. Press the start key to start the pre-detection.
4. Check to make sure that "OK" is displayed for the result.

✻ When the result says "NG", clean the glass and check again.

12.4.18 Non-Image Area Erase Check

A. Use

- The non-image area erase function may not work properly under bright light source. Incoming light quantity is checked to verify that the non-image area erase function can work properly under the environment.
- Verification results are shown as follows:
  OK : Works properly.
  NG1 : Works properly. However, data that may interfere with the non-image area erase function was found. This function may not work well with dark original.
  NG2 : Data that may interfere with the non-image area erase function was found.
- Use this feature when installing a new machine or reinstalling a machine in a new place.
- Use this feature when the non-image area erase function fails to work properly due to the changes of the surrounding environment at the installation site.

B. Procedure

1. Call the Service Mode to the screen.
2. Touch these keys in this order: [Machine] → [Non-Image Area Erase Check].
3. Press the Start key to start a check.

NOTE

- **Before the check, make sure that the ADF or original cover is completely opened. In addition, make sure that no scratch or stain exists on the original glass.**

4. Check the result is “OK.”

✻ If the check result is “NG1” or “NG2,” reinstall the machine in another place or adjust the orientation of the machine to reduce light incidence on the machine. Then, perform the check again.

12.4.19 Cooling Fan Stop Delay

A. Use

- To set the period of time before the cooling fan motor stops.
- At the completion of a print job/image stabilization or at jam/malfunction, the fan motor rotating at full speed comes to a stop. The period of time before the fan motor stops can be delayed so that ozone left around the PC drum can be discharged.

B. Procedure

- 0 to 15 (minutes) can be entered with the ten-key pad. (Default is 0.)

NOTE

- **When this setting is set to 0 (minute), the fan motor runs for 20 seconds before it stops.**

12.4.20 Fusing Productivity Choice

A. Use

- To set whether to enable or disable the paper-to-paper distance control.
- Change the default setting if you give a higher priority to fusing productivity than fusing characteristics provided by the paper-to-paper distance control when printing on thick paper.

B. Procedure

- The default setting is Fusing Priority.

“Fusing Priority” Productivity Priority

12.4.21 Print Interval Extension

A. Use

- To set whether to enable or disable the curl prevention control that prevents paper curl problem.
- Use this setting when plain paper curl problem occurs.
  0: Disables the curl prevention control.
  1: Enables the curl prevention control only under low temperature high humidity or high temperature high humidity conditions.
  2: Always enables the curl prevention control.

B. Procedure

- The default setting is 0.

“0” 1 2

12.5 Firmware Version

A. Use

- To check the firmware version.
- Use when the firmware is upgraded.
- When the firmware is upgraded or PWB is replaced.

B. Procedure

1. Call the Service Mode to the screen.
2. Touch [Firmware Version].
3. Select the appropriate key from 1 to 3 to check the Firmware Version.

12.6 Imaging Process Adjustment

12.6.1 Gradation Adjust

A. Use

- To make an automatic adjustment of gradation based on the test pattern produced and the readings taken by the scanner.
- Use this adjustment when reproduction of gradations and density has deteriorated.
- The drum unit, developer or developing unit has been replaced.

Maximum Density Adjustment : The density of solid image can change depending on the variations in developing, light intensity of the exposure lamp, and PC drum sensitivity as well as the changes in the amount of electrostatic charge of toner due to the ambient environment and duration of machine use. To prevent the change, the amount of toner adhered to paper is read by the scanner and in accordance with the result, Vdc is adjusted. Perform this adjustment before the Gradation Adjustment.

Gradation Adjustment : The gradations are corrected.

Initialization : The current gradation correction table (Items adjusted in [Gradation Adjustment]) and the difference value of Vdc (Items adjusted in [Maximum Density Adjustment]) are cleared.
After selecting [Initialization], if you press the Start key, initialization starts.

(1) Procedure

1. Load plain paper of A3/11 x 17 or A4/8 $^1/_2$ x 11 into the paper feed tray.
2. Call the Service Mode to the screen.
3. Touch these keys in this order: [Image Process Adjustment] → [Gradation Adjust].
4. Touch [Maximum Density Adjustment], select the paper size, and press the Start key.
   A test pattern is output.
5. Place the test pattern produced on the original glass.

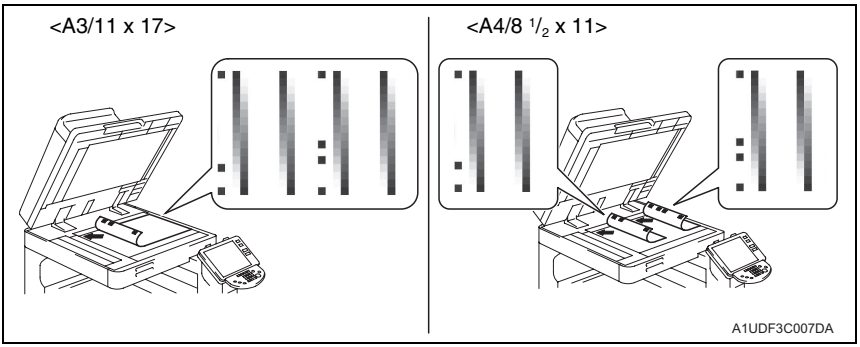

6. Place ten blank paper on the test pattern and close the original cover.
7. Press the Start key. (The machine will then start scanning the test pattern.)
8. After original scan is completed, confirm that “OK” is shown for “Maximum Density Adjustment” on the top right of the screen.
9. Touch [Gradation Adjustment], select the paper size, and press the Start key.

10. Place the test pattern produced on the original glass.

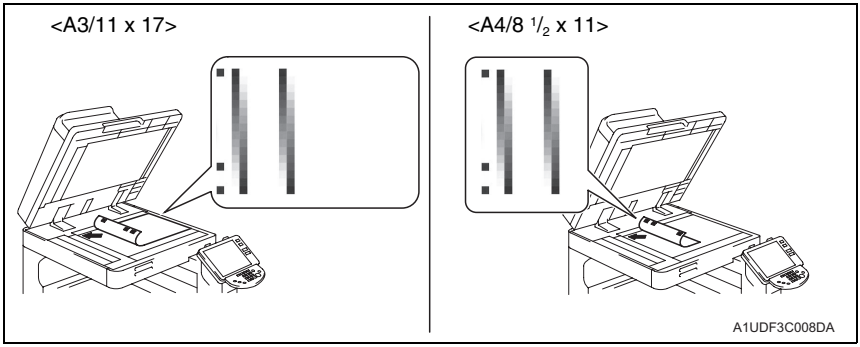

11. Place ten blank paper on the test pattern and close the original cover.
12. Press the Start key. (The machine will then start scanning the test pattern.)
13. Repeat steps from 9 through 12 twice (a total of three times).
14. Touch [Gradation Adjust] to display the Adj. Values and Conv. Values for Dark and Highlight.
15. Use the following procedures to check the Conv. Value.

Dark: 0 ± 100 and Highlight: 0 ± 60: It completes the adjustment procedure.
If neither Dark nor Highlight falls outside the ranges specified above: Perform steps from 9 to 12.

NOTE

- **If the convergence falls within the specified range after the second Gradation Adjustment, further adjustment may not be necessary.**
- If a fault is detected, “0” is displayed for all values. In that case, after turning off the main power switch, turn it on again more than 10 seconds after and then make the gradation adjustment again.
- If a total of four sequences of gradation adjust do not bring the values into the specified range, check the image.
- If the image is faulty, perform the troubleshooting procedures for image problems.

12.6.2 Max Image Density Adj

A. Use

- To adjust gradation and image density to target reproduction levels by varying the maximum amount of toner sticking to paper through auxiliary manual fine-adjustment of gamma after gradation adjust.
- After completing Gradation Adjust, supplementarily make a manual fine-adjustment of Vdc and Vg to change the maximum amount of toner adhered to paper so that the gradation and density are adjusted to the target reproduction level.
  (The Vdc and Vg values calculated in their control system are changed while the difference between the two values is kept unchanged.)
- Use this adjustment if the target density is not obtained after performing [Maximum Density Adjustment].

B. Procedure

- The default setting is 0.

-8 to +8 (step: 1 *)

*: 1 step is the equivalent of 0.02 of difference in density.

1. Call the Service Mode to the screen.
2. Touch these keys in this order: [Imaging Process Adjustment] → [Max Image Density Adj].
3. Enter the new setting from the 10-key pad or [+/-].
   To increase the maximum amount of toner sticking, increase the setting value.
   To decrease the maximum amount of toner sticking, decrease the setting value.
4. Check the print image for any image problem.

12.6.3 TCR Level Setting

A. Use

- To adjust the T/C control level when an abnormal image density occurs as a result of a change in the amount of charge of toner and carrier due to an environmental change.
- Use when T/C changes due to changes in environmental conditions of the user site.

B. Procedure

- The default setting is 0.

-3 to +3

(1 step in positive (+) direction: 0.5 % increase, 1 step in negative (-) direction: 0.5 % decrease, The target T/C ratio is 5.0 to 7.0 %.)

1. Call the Service Mode to the screen.
2. Touch these keys in this order: [Process] → [TCR Level Setting].
3. Select the color to be adjusted.
4. Enter the new setting from the 10-Key pad and [+/-] key.
   To increase T/C, increase the setting value.
   To decrease T/C, decrease the setting value.
5. Touch [END] to validate the adjustment value.
6. Check the print image for any image problem.

12.6.4 Image Background Adj

A. Use

- To supplementarily make a manual fine-adjustment of Vg after performing [Gradation Adjust].
  (While both the Vdc and Vg values are changed with [Max Image Density Adj], only the Vg value is changed with this setting.)
- Use when a foggy background occurs due to a printer problem.

B. Procedure

- The default setting is 0.

-5 to +5 (step: 1)

* 1 step is equivalent to 10 V.

1. Call the Service Mode to the screen.
2. Touch these keys in this order: [Imaging Process Adjustment] → [Image Background Adj].
3. Select the color to be adjusted.
4. Enter the new setting from the 10-key pad.
   To make the background level foggier, decrease the setting value.
   To make the background level less foggy, increase the setting value.
5. Check the print image for any image problem.

12.6.5 Transfer Voltage Fine Adj

A. Use

- Adjust the image transfer output (ATVC) on the 1st page and the 2nd page for each paper type.
- To use when the transfer failure at the trailing edge occurs.
- Pressing the [AUTO] key down activates the image transfer amperage upper and lower limit control. In this case, the machine uses the voltage determined by the auto transfer voltage control and the image transfer output fine adjustment value does not take effect.

B. Procedure

- The default setting is 0.

-8 to +7 (step: 1)

* 1 step is equivalent to 100 V.

1. Call the Service Mode to the screen.
2. Touch these keys in this order: [Imaging Process Adjustment] → [Transfer Voltage Fine Adj].
3. Select the side of the image (1st side or 2nd side), on which the transfer failure occurs.

NOTE

- **For thick 1, thick 2, envelopes and OHP film only 1st side can be selected.**

4. Select the paper type with the transfer failure.
5. Enter the new setting from the [+] / [-] keys.
   To increase the ATVC value (in the direction of a foggier image),
   increase the setting value.
   To decrease the ATVC value (in the direction of a less foggy image),
   decrease the setting value.
6. Touch [END] to validate the adjustment value.
7. Check the print image for any image problem.

* Press [Auto] to automatically control the image transfer output without using the 2nd image transfer output fine adjustment value.

12.6.6 TCR Sensor Adjust

A. Use

- To automatically adjust the TCR sensor.
  To obtain the output value of the TCR sensor and determine a standard value for the TC ratio determination control so that the toner supply control can be optimized.
- Use this adjustment at the set-up.
- Use this adjustment when the developer or the developing unit is replaced.

B. Procedure

1. Call the Service Mode to the screen.
2. Touch these keys in this order: [Imaging Process Adjustment] → [TCR Sensor Adjust].
3. Touch [Black], and press the Start key.

NOTE

- **After pressing the Start key, wait 1 minute without touching any keys. The Start key lights up in red.**

4. When the adjustment is completed, the Start key lights up in blue.
5. Touch [END] to complete the automatic adjustment.

12.6.7 Paper Separation Adjustment - Paper separation adjustment

A. Use

- By changing the period between the activation of the timing roller and the image transfer output, the paper separation position can be adjusted for the 1st and 2nd sides of paper in duplex print.
- To ensure proper balance between paper separating and image transferring performances by varying the paper separation position applied for duplex printing.

B. Procedure

- The default setting is 0.

-2 mm to +2 mm (step: 0.1 mm)

1. Call the Service Mode to the screen.
2. Touch these keys in this order: [Imaging Process Adjustment] → [Paper Separation Adjustment] → [Paper separation adjustment].
3. Select [First Side] or [Second Side].
4. Use the [+] or [-] key to change the setting value.
   Priority on paper separation performance: Increase the setting value.
   Priority on image transfer performance: Decrease the setting value.
5. Touch [OK] and determine the adjustment value.
6. Make a print and check the produced image.

12.6.8 Paper Separation Adjustment - Paper Separation Voltage Adjust

A. Use

- To fine-adjust the paper separation voltage determined by the separation output determination control for each type of paper.
  (However, you cannot fine-adjust the paper separation voltage for the 2nd side of paper.)
- Use this adjustment when image failure such as voids on solid black image occurs under low temperature and low humidity conditions.

B. Procedure

- The default setting is 0.

-5 to +5 (step: 1 *)

* 1 step is equivalent to 100 V.

1. Call the Service Mode to the screen.
2. Touch these keys in this order: [Imaging Process Adjustment] → [Paper Separation Adjustment] → [Paper Separation Voltage Adjust].
3. Select the paper type.
4. Use the [+] or [-] key to change the setting value.
   Priority to separating ability: Increase the setting value.
   Priority to transferring ability: Decrease the setting value.

NOTE

- **If the paper separation voltage that is calculated based on the fine-adjusted value is not between the lower limit (500 V) and the upper limit (2000 V), the lower limit value or the upper limit value is used as the paper separation voltage.**

5. Touch [OK] and determine the adjustment value.
6. Make a print and check the produced image.

12.6.9 Manual Toner Add

A. Use

- To adjust the set T/C level by replenishing an auxiliary supply of toner when a low ID occurs due to a lowered T/C ratio after large numbers of prints have been made of originals having a high image density.
- When there is a drop in T/C ratio.
- Use this function at the set-up.

B. Procedure

1. Call the Service Mode to the screen.
2. Touch these keys in this order: [Imaging Process Adjustment] → [Manual Toner Add].
3. Touch [Black].
4. Pressing the Start key will let the machine detect the current toner density and; if the density is lower than a reference value, a toner replenishing sequence and then a developer agitation sequence are run.
5. When toner supply is completed, the Start key lights up in blue.
6. Touch [END] to complete toner supply.

12.6.10 Dot Enhancement

A. Use

- Not used.

B. Procedure

- The default setting is 63.

12.7 CS Remote Care

12.7.1 Outlines

- CS Remote Care enables the machine and the computer at CS Remote Care center to exchange data through telephone/fax line in order to control the machine.
- CS Remote Care enables the machine to call the computer at the center when trouble occurs. It also enables the computer at the center to contact the machine for the necessary data.
- Data which CS Remote Care handles can be divided into the following groups.
  a. Data which show the status of use of the machine such as total count, PM count.
  b. Data which show the abnormal situation on the machine such as where and how often errors occur.
  c. Data on adjustment
  d. Data on setting

NOTE

- **It cannot be set when the following setting is set to "ON".**
  [Administrator Settings] → [Security Settings] → [Enhanced Security Mode]

12.7.2 Setting up the CS Remote Care

NOTE

- **For resetting up the machine which CS Remote Care has already been set up, clear the RAM for CS Remote Care before resetting.**
  See P.403
- **When using a telephone line modem for connection, use the data modem which is based on the ITU-T recommendations V.34/V.32 bis/V.32 and AT command.**

A. Using the tel/fax modem, E-mail

Step	Procedure		
	Using the telephone line modem	Using the Fax line modem *1	Using E-mail
0	Register the device ID to the application at CS Remote Care center. The initial connection is not available unless the device ID is registered.		
1	Connecting the modem Turn the power for the modem OFF. Connect the machine and the modem with a modem cable. Connect the modem and the wall jack with a modular cable. * For connecting the modular cable, see the manual for the modem.	Be sure to remove the telephone line modem when the fax line is used.	Be sure to remove the telephone line modem when e-mail is used.
2	Inputting the ID code *1.* Select [Service Mode] → [CS Remote Care] → [ID Code], and touch [ID Code]. *2.* Input the seven digits ID of the service person, and touch [ID Code] again. See P.400		

Step	Procedure		
	Using the telephone line modem	Using the Fax line modem *1	Using E-mail
3	Clearing the RAM *1.* Select [Service Mode] → [CS Remove Care], and touch [Detail Setting]. *2.* Touch [RAM Clear]. *3.* Select Set, and touch [OK]. See P.403		
4	Selecting the CS Remote Care function Select [Service Mode] → [CS Remove Care] → [System Selection], and touch [Modem].	Selecting the CS Remote Care function Select [Service Mode] → [CS Remove Care] → [System Selection], and touch [Fax].	Selecting the CS Remote Care function Select [Service Mode] → [CS Remote Care] → [System Setting], and touch [E-Mail 1] or [E-Mail 2].
5	Inputting the ID code *1.* Select [Service Mode] → [CS Remote Care] → [ID Code], and touch [ID Code]. *2.* Input the seven digits ID of the service person, and touch [ID Code] again. See P.400		
6	Setting the date and time for CS Remote Care *1.* Select [Service Mode] → [CS Remote Care], and touch [Detail Setting]. *2.* Touch [Date & Time Setting]. *3.* Input the date, time and the time zone using the 10-key pad, and touch [Set]. See P.401		
7	Setting the Center ID *1.* Select [Service Mode] → [CS Remote Care], and touch [Detail Setting]. *2.* Touch [Machine Setting] → [Center ID], and input the Center ID (five digits). See P.401		
8	Confirm the Device ID *1.* Select [Service Mode] → [CS Remote Care], and touch [Detail Setting]. *2.* Touch [Machine Setting] → [Device ID], and input Device ID (13 digits). **NOTE** • **[Device ID] displays the serial number that is entered in [Service Mode]→[System 1]→[Serial Number].**		
9	Proceed to step 10.		Encryption setting *1.* Select [Service Mode] → [CS Remote Care], and touch [Detail Setting]. *2.* Touch [Basic Setting] and select either Encryption or No Encryption. Retransmission interval on e-mail delivery error • When selecting [E-mail2], set the retransmission interval on e-mail delivery error in software SW setting. See P.391
10	Setting the telephone number of the Center *1.* Select [Service Mode] → [CS Remote Care], and touch [Detail Setting]. *2.* Touch [Machine Setting] → [Center Telephone Number]. *3.* Input the telephone number of the center using the 10-keys pad and [P], [T], [W], [-]. See P.401		Setting the Respond Timeout *1.* Select [Service Mode] → [CS Remote Care], and touch [Detail Setting]. *2.* Touch [Respond Timeout] and enter the response timeout using the 10-key pad. **NOTE** • **Under normal conditions, there is no need to change the default setting.** See P.401

Step	Procedure		
	Using the telephone line modem	Using the Fax line modem *1	Using E-mail
11	Inputting the device telephone number *1.* Select [Service Mode] → [CS Remote Care], and touch [Detail Setting]. *2.* Touch [Machine Setting] → [Device Telephone Number]. *3.* Input the Device telephone number using the 10-key pad and [P], [T], [W], [-]. See P.401		Proceed to step 12.
12	Inputting the AT command for initializing the modem *1.* Select [Service Mode] → [CS Remote Care] → and touch [Detail Setting]. *2.* Touch [AT Command]. *3.* Input AT Command. **NOTE** • **Change this command only when it is necessary. (They do not need to be changed in normal condition.)** • **For details on AT command, see the manual for the modem.** See P.404	Proceed to step 13.	Setting the E-mail address *1.* Select [Service Mode] → [CS Remote Care], and touch [Server Set]. See P.405 *2.* Touch [Server for RX], and set POP3 server address, POP3 login name, POP3 password and POP3 port number. *3.* Press [Receive], and set the E-Mail address, Mail Check, Connection Time Out and APOP Authentication. *4.* Touch [Send], and set the SMTP server address, SMTP port number, Connection Time Out, and APOP Authentication. *5.* Touch [TX/RX Test], and press Start key to carry out a transmission/reception test. If it fails to exchange messages, see the error message to take necessary measure, and try again.
13	Setting the DIPSW for CS Remote Care **NOTE** • **This setting is not normally necessary. Take this step only when necessary in a specific connecting condition.**		When selecting [E-Mail2]: *1.* Select [Service Mode] → [CS Remote Care], and touch [Detail Setting]. *2.* Touch [Schedule] and set the schedule of periodic transmission. See P.401 *3.* Touch [Center Notifi. Item] and set items that will be reported to the Center. See P.401

Step	Procedure		
	Using the telephone line modem	Using the Fax line modem *1	Using E-mail
14	Executing the initial transmission *1.* Select [Service Mode] → [CS Remote Care], and touch [Detail Setting]. *2.* Touch [initial transmission] key on the right bottom of the screen to start initial transmission. *3.* When the machine is properly connected with the center, CS Remote Care setting screen will be displayed. **NOTE** • **The initial transmission key at the right bottom of the screen will be displayed only when the center ID, the device ID, Telephone number of the center and the device telephone number have been input.** See P.401		Receiving the initial connection E-mail message Sending the initial connection E-mail message from the center to the address of the copier. **NOTE** • **When receiving the initial connection E-mail message from the center while CS Remote Care-related screen is being displayed, the current setting information will be deleted, and CS Remote Care setting will be displayed.** • **For sending the initial connection E-mail, see the manual for CS Remote Care center.** • **Messages can be exchanged only between the center with initial connection and the copier.** • **The initial connection from the center will be carried out, and the E-mail address of the center will be stored in the copier.** • **When the initial registration is complete, the E-mail address of the center will be displayed by selecting [Service Mode] → [CS Remote Care] → [Detail Setting], [Basic Setting] → [E-Mail address].**

*1: Setting will be available only when the optional fax board is installed.

B. When using a WebDAV server in http communication

- When using http communication for CS Remote Care, the setup is as follows:

Step	http (bilateral communication)	http (unilateral communication: Device to Center)
	Procedure	
0	Register the device ID to the application at CS Remote Care center. The initial connection is not available unless the device ID is registered.	
1	Be sure to remove the telephone line modem when the http communication is used.	
2	Inputting the ID code *1.* Select [Service Mode] → [CS Remote Care] → [ID Code], and touch [ID Code]. *2.* Input the seven digits ID of the service person, and touch [ID Code] again. See P.400	
3	Clearing the RAM *1.* Select [Service Mode] → [CS Remove Care], and touch [Detail Setting]. *2.* Touch [RAM Clear]. *3.* Select Set, and touch [OK]. See P.403	
4	Selecting the CS Remote Care function Select [Service Mode] → [CS Remove Care] → [System Selection], and touch [http1].	Selecting the CS Remote Care function Select [Service Mode] → [CS Remove Care] → [System Selection], and touch [http2].
5	Inputting the ID code *1.* Select [Service Mode] → [CS Remote Care] → [ID Code], and touch [ID Code]. *2.* Input the seven digits ID of the service person, and touch [ID Code] again. See P.400	

Step	http (bilateral communication)	http (unilateral communication: Device to Center)
	Procedure	
6	Setting the date and time for CS Remote Care *1.* Select [Service Mode] → [CS Remote Care], and touch [Detail Setting]. *2.* Touch [Date & Time Setting]. *3.* Input the date, time and the time zone using the 10-key pad, and touch [Set]. See P.401	
7	Setting the Center ID *1.* Select [Service Mode] → [CS Remote Care], and touch [Detail Setting]. *2.* Touch [Machine Setting] → [Center ID], and input the Center ID (five digits). See P.401	
8	Confirm the Device ID *1.* Select [Service Mode] → [CS Remote Care], and touch [Detail Setting]. *2.* Touch [Machine Setting] → [Device ID], and input Device ID (13 digits). **NOTE** • **[Device ID] displays the serial number that is entered in [Service Mode] → [System 1] → [Serial Number].**	
9	Encryption setting *1.* Select [Service Mode] → [CS Remote Care], and touch [Detail Setting]. *2.* Touch [Basic Setting] → [Client Setting] and select either Encryption or No Encryption.	
10	Heart Beat *1 *1.* Select [Service Mode] → [CS Remote Care] → [Detail Setting], and touch [Heart Beat]. *2.* In [Communication], set whether or not to enable Heart Beat communication. (Default: Yes) *3.* Touch [Comm. Interval] and enter a Heart Beat transmission interval (1 to 256 minutes, Default: 30 minutes). *4.* In [Specified Transmission], set whether or not to enable Heart Beat transmission at a specified interval. (Default: Yes) *5.* Touch [Hour] and [Minute] and enter a time for specified transmission.	
11	Proceed to step 12.	Notification Setting *1.* Select [Service Mode] → [CS Remote Care] → [Detail Setting], and touch [Notification Setting]. *2.* Touch [Schedule] and set the schedule of periodic transmission. See P.401 *3.* Touch [Center Notifi. Item] and set items that will be reported to the Center. See P.401
12	Setting the http server *1.* Select [Service Mode] → [CS Remote Care], and touch [Server Set]. See P.408 *2.* Touch [HTTP Server Settings] and set a URL address, account, password, and port number. *3.* Touch [Proxy/SSL] and make proxy server and SSL settings.	
13	Setting the DIPSW for CS Remote Care **NOTE** • **This setting is not normally necessary. Take this step only when necessary in a specific connecting condition.**	

Step	http (bilateral communication)	http (unilateral communication: Device to Center)
	Procedure	
14	Executing the initial transmission *1.* Select [Service Mode] → [CS Remote Care], and touch [Detail Setting]. *2.* Touch [initial transmission] key on the right bottom of the screen to start initial transmission. **NOTE** • **The initial transmission key at the right bottom of the screen will be displayed only when the center ID and the URL address have been input.** See P.401 *3.* When the machine is properly connected with the center, CS Remote Care setting screen will be displayed. • If communication error between the machine and Center occurs, check the error code that appears.	

*1 Heart Beat is a feature that uploads a Heart Beat file to the registered web server at a specified interval to report that the device is operating. Heart Beat files include total counter and status information.

12.7.3 Software SW setting for CS Remote Care

NOTE

- **Software SW bits data are written into the NVRAM every time a change is made. In case you changed bit data by accident, be sure to restore the previous state.**

A. Input procedure

1. Select [Service Mode] → [CS Remote Care] → [Detail Setting], and touch [Software Switch Setting].
2. Touch [Switch No.], and input the switch number (two digits) using the 10-key pad.
3. Touch [Bit Assignment], and select switch bit number using the arrow keys, and input 0 or 1 using the 10-key pad.
(For setting by hexadecimal numbers, touch [HEX Assignment] key, and input using the 10-key pad or A to F keys.)
4. Touch [Fix].

NOTE

- **About functions of each switch, see to "B. List of software SW for CS Remote Care."**

B. List of software SW for CS Remote Care

SW No.	Functions	Ref. Page
01	• Dial Mode, Line for send only, Baud rate	P.392
02	• Emergency transmission, Date specified transmission, Call parts replace date, Call drum replace date, Call regular service date (PM), Auto call on the IC Life, Auto call of the IR shortage, Auto call on the zero reset of the fixed parts replacement	P.393
03	• Trouble display setting, Auto call on the toner empty	P.393
04	• CS Remote Care communication mode	P.394
05	• Modem redial interval	P.394
06	• Modem redial times	P.395
07	• Redial for response time out	P.395
08	• Retransmission interval on E-Mail/http delivery error	P.395

SW No.	Functions	Ref. Page
09	• Retransmission times on E-Mail/http delivery error	P.396
10	• Time zone settings	P.396
11	• Timer 1 RING reception → CONNECT reception	P.396
12	• Timer 2 Dial request completed → CONNECT reception	P.397
13	• Reservation	—
14	• Timer 4 Line connection → Start request telegram delivery	P.397
15	• Timer 5 Wait time for other side's response	P.397
16	• Reservation	—
17	• Reservation	—
18	• Attention display To set weather to give the alarm display when using the modem but the power for the modem is OFF.	P.398
19	• Reservation	—
20	• Reservation	—
21	• Automatic transmission of chronological misfeed data at the time of transmission of misfeed frequent occurrence warning, transmission of paper-based misfeed frequent occurrence warning, transmission of original-based misfeed frequent occurrence warning	P.398
22	• Paper-based misfeed frequent occurrence threshold value	P.398
23	• Original-based misfeed frequent occurrence threshold value	P.399
24 : 40	• Reservation	—

C. Details of software SW for CS Remote Care

NOTE

- **Do not change any bit not described on this table.**
- **Shaded portions denote default values.**

SW No.	Default		
01	Bit	7654 3210	HEX: 81
		1000 0001	

Bit	Functions	Logic 0	Logic 1	Description
7-4	Baud rate	0110		9600 bps
		0111		19.2 Kbps
		1000		38.4 Kbps
		Other		Not available
3-2	Reservation			
1	Line for send only	Disable	Enable	
0	Dial Mode	Pulse	Tone	

SW No.	Default		
02	Bit	7654 3210	HEX: FF
		1111 1111	

Bit	Functions	Logic		Description
		0	1	
7	Auto call on the zero reset of the fixed parts replacement	Disable	Enable	
6	Auto call of the IR shortage	Disable	Enable	
5	Auto call on the IC Life	Disable	Enable	
4	Call regular service date(PM)	Disable	Enable	
3	Call drum replace date	Disable	Enable	
2	Call parts replace date	Disable	Enable	
1	Date specified transmission	Disable	Enable	
0	Emergency transmission	Disable	Enable	

SW No.	Default		
03	Bit	7654 3210	HEX: 0A
		0000 1010	

Bit	Functions	Logic		Description
		0	1	
7-4	Reservation			
3	Reservation			
2	Reservation			
1	Auto call on the toner empty	Disable	Enable	
0	Trouble Display setting	When the CSRC is not connected	When the CSRC is connected	Select the type of message to be displayed at the time of automatic trouble notification made when the CSRC is connected, either the message when the CSRC is connected or that when the CSRC is not connected.

SW No.	Default		
04	Bit	7654 3210	HEX: 02
		0000 0010	

Bit	Functions	Logic		Description
		0	1	
7-2	Reservation			
1-0	CS Remote Care communication mode	00		DATA
		01		FAX
		10		E-mail
		11		Not available

SW No.	Default		
05	Bit	7654 3210	HEX: 03
		0000 0011	

Bit	Functions	Logic		Description
		0	1	
7-5	Reservation			
4-0	Modem redial interval	00001		1 minute
		00010		2 minutes
		00011		3 minutes
		00100		4 minutes
		00101		5 minutes
		00110		6 minutes
		00111		7 minutes
		01000		8 minutes
		01001		9 minutes
		01010		10 minutes
		Others		Not available

SW No.	Default		
06	Bit	7654 3210	HEX: 0A
		0000 1010	

Bit	Functions	Logic		Description
		0	1	
7-0	Modem redial times	0000 0000		0 time
		0000 0001		1 time
		:		:
		0000 1010		10 times
		:		:
		0110 0010		98 times
		0110 0011		99 times
		Others		Not available

SW No.	Default		
07	Bit	7654 3210	HEX: 01
		0000 0001	

Bit	Functions	Logic		Description
		0	1	
7-0	Redial for response time out	0000 0000		0 time
		0000 0001		1 time
		Others		Not available

SW No.	Default		
08	Bit	7654 3210	HEX: 06
		0000 0110	

Bit	Functions	Logic		Description
		0	1	
7-0	Retransmission interval on E-mail/http delivery error	0000 0000		0 minute
		0000 0001		10 minutes
		:		:
		0000 0110		60 minutes
		:		:
		0000 1011		110 minutes
		0000 1100		120 minutes
		Others		Not available

SW No.	Default		
09	Bit	7654 3210	HEX: 0A
		0000 1010	

Bit	Functions	Logic 0	Logic 1	Description
7-0	Retransmission times on E-mail/http delivery error	0000 0000		0 time
		0000 0001		1 time
		:		:
		0000 1010		10 times
		:		:
		0110 0010		98 times
		0110 0011		99 times
		Others		Not available

SW No.	Default		
10	Bit	7654 3210	HEX: 00
		0000 0000	

Bit	Functions	Logic 0	Logic 1	Description
7-0	Time zone settings	0000 0000		-12 hours
		0000 0001		-11 hours
		:		:
		0110 0010		+12 hours
		0001 1010		+13 hours
		Others		Not available

SW No.	Default		
11	Bit	7654 3210	HEX: 20
		0010 0000	

Bit	Functions	Logic 0	Logic 1	Description
7-0	Timer 1 RING reception → CONNECT reception	0000 0000		0 sec
		0000 0001		1 sec
		:		:
		0010 0000		32 sec
		:		:
		1111 1110		254 sec
		1111 1111		255 sec

SW No.	Default		
12	Bit	7654 3210	HEX: 40
		0100 0000	

Bit	Functions	Logic 0	Logic 1	Description
7-0	Timer 2 Dial request completed → CONNECT reception	0000 0000		0 sec
		0000 0001		1 sec
		:		:
		0100 0000		64 sec
		:		:
		1111 1110		254 sec
		1111 1111		255 sec

SW No.	Default		
14	Bit	7654 3210	HEX: 20
		0010 0000	

Bit	Functions	Logic 0	Logic 1	Description
7-0	Timer 4 Line connection → Start request telegram delivery	0000 0000		0 msec
		0000 0001		100 msec
		:		:
		0010 0000		3,200 msec
		:		:
		1111 1110		25,400 msec
		1111 1111		25,500 msec

SW No.	Default		
15	Bit	7654 3210	HEX: 1E
		0001 1110	

Bit	Functions	Logic 0	Logic 1	Description
7-0	Timer 5 Wait time for other side's response	0000 0000		0 msec
		0000 0001		1 sec
		:		:
		0001 1110		30 sec
		:		:
		1111 1110		254 sec
		1111 1111		255 sec

SW No.	Default		
18	Bit	7654 3210	HEX: 01
		0000 0001	

Bit	Functions	Logic		Description
		0	1	
7-1	Reservation			
0	Attention display To set weather to give the alarm display when using the modem but the power for the modem is OFF.	OFF	ON	

SW No.	Default		
21	Bit	7654 3210	HEX: 00
		0000 0000	

Bit	Functions	Logic		Description
		0	1	
7-3	Reservation			
2	Automatic transmission of chronological misfeed data at the time of transmission of misfeed frequent occurrence warning	OFF	ON	
1	Original-based misfeed frequent occurrence threshold value	OFF	ON	If the number of jams exceeds the threshold specified per day (0:00 to 23:59), Jam Frequent Occurrence Warning is sent. At 12 a.m. of the next day, the counter is reset.
0	Paper-based misfeed frequent occurrence threshold value	OFF	ON	

SW No.	Default		
22	Bit	7654 3210	HEX: 05
		0000 0101	

Bit	Functions	Logic		Description
		0	1	
7-0	Paper-based misfeed frequent occurrence threshold value	0000 0001		1
		0000 0010		2
		:		:
		0000 0101		5
		:		:
		0000 1110		14
		0000 1111		15
		Others		Not available

SW No.	Default		
23	Bit	7654 3210	HEX: 05
		0000 0101	

Bit	Functions	Logic 0	Logic 1	Description
7-0	Original-based misfeed frequent occurrence threshold value	0000 0001		1
		0000 0010		2
		:		:
		0000 0101		5
		:		:
		0000 1110		14
		0000 1111		15
		Others		Not available

12.7.4 Setup confirmation

- **Follow the steps below to make sure that CS Remote Care has been properly set up.**

1. Call the Service Mode to the screen.
2. Touch [CS Remote Care].
3. Check to make sure that only selected item is displayed.

12.7.5 Calling the maintenance

- When CE starts maintenance, inputting the ID code of CE (seven digits: numbers which CE can identify. They are controlled by the distributor.) will transmit the information to the Center side and tells that the maintenance has started. When the maintenance is finished, touching [Maintenance Complete] key will transmit the information to the center and tells that it is finished.

A. When starting the maintenance

1. Select Service Mode and touch [CS Remote Care].
2. Touch [ID Code], and input ID Code.
3. Touch [ID Coke].

* The Start key blinks while maintenance is being carried out.

B. When finishing the maintenance

1. Select Service Mode and touch [CS Remote Care].
2. Touch [Maintenance Complete].

12.7.6 Calling the center from the administrator

- When the CS Remote Care setup is complete, the administrator can call the CS Remote Care center.

1. Select [Administrator Settings], and touch [System Connection].
2. Touch [Admin. transmission].
3. Press the Start key.
   When the setup is not complete or another transmission is being carried out, the Admin. transmission key will not be displayed, and the transmission is not available.

NOTE

- **For transmitting data of the machine by calling the center on the specified date and time, refer to the manual for CS Remote Care center.**

12.7.7 Checking the transmission log

- The transmission log list will be output to be checked.

1. Select [Service Mode] → [CS Remote Care], and touch [Detail setting].
2. Touch [Communication Log Print].
3. Load tray 1 or bypass tray with A4S paper.
4. Press the Start key to output transmission log.

12.7.8 Detail on settings

A. System Selection

(1) Use

- To select the system type for remote diagnosis.
- Use to newly build or change the system.

(2) Procedure

- Select E-Mail, Modem, or Fax.
- Fax is available only when the optional fax kit is being installed.

E-Mail1 E-Mail2 Modem Fax http1 http2

B. ID Code

(1) Use

- To register the service ID.
- Use when registering and changing service ID.

(2) Procedure

- Enter a 7-digit code from the 10-key pad. (0000001 to 9999999)

<Registration>

- Touch ID code and enter the service ID.
- Touch [ID code] to register the ID.
- The [Detail Setting] will appear when the ID has been registered.

C. Detail Setting

(1) Basic Setting (E-Mail1, E-Mail2, Modem or Fax)

<Use>

- Execute the primary setting.
- Use to change the set contents.
- Use to register the machine to the CS Remote Care center.

<Procedure>

1. Call the Service Mode to the screen.
2. Touch [CS Remote Care].
3. Touching the [Detail Setting] will display the primary setting.

<Center Setting>

- Set the center ID, Device ID, and the phone No.
- When e-mail is selected for system and all setup procedures are completed, e-mail address of the center is displayed.

* When entering the phone number, 10-keys and keys on the screen have following meanings.

[-] Pose	: Waits to start transmitting after dialing
[W] Wait	: Detects the dial tone of the other end
[T] Tone dial	: Carry out tone dialing
[P] Pulse dial	: Carry out pulse dialing
[*], [#]	: To be used as necessary

<Schedule (Only when the [E-Mail2] is selected)>

- Set the schedule of notification to the center.
- Up to three different notification schedules can be registered.
- Select the notification cycle from [Day], [Week], or [Month].
  When selecting [Day] for the notification cycle, set the Day Frequency.
  When selecting [Week] for the notification cycle, set the Week Frequency and day of the week.
  When selecting [Month], set the Month Frequency and the date of the month.

<Center Notification (Only when the [E-Mail2] is selected)>

- Select the items of data that will be sent to the center in one-way transmission through E-Mail2.
- The following table shows each of the notification item keys and corresponding data.

[1]	Sales count data	[7]	EKC data
[2]	Error count data	[8]	Adjustment data
[3]	Service count data	[9]	Coverage data
[4]	Life count data Life cycle data	[10]	Not used
[5]	CSRC-System data Device config data	[11]	Not used
[6]	History data	[12]	Not used

NOTE

- **Multiple items of data can be selected and sent at one time. However, be sure that only EKC data cannot be sent together with other items of data.**

<Initial Transmission>
- Touching the Initial Transmission key will sent the information to the CS Remote Care center to register the machine.
  (Only when the modem or fax is selected on the system Input.)

(2) Basic Setting (http1 or http2)

<Use>
- Execute the primary setting.
- Use to change the set contents.
- Use to register the machine to the CS Remote Care center.

<Procedure>
1. Call the Service Mode to the screen.
2. Touch [CS Remote Care].
3. Touching the [Detail Setting] will display the primary setting.

<Center Setting>
- Set the center ID.
- Display the device ID.

<Client Setting>
- To set whether or not to encrypt communication.

<Heart Beat>
- To make Heart Beat related settings.
- Heart Beat is a feature that uploads a Heart Beat file to the registered web server at a specified interval to report that the device is operating. Heart Beat files include total counter and status information.

<Initial Transmission>
- Touching the Initial Transmission key will sent the information to the CS Remote Care center to register the machine.

(3) Date & Time Setting

<Use>
- To set the data and time-of-day.
- Use to set or change the date and time-of-day.

<Procedure>
1. Call the Service Mode to the screen.
2. Touch [CS Remote Care].
3. Touch [Detail Setting] to access Date & Time Setting.
4. Enter the date (month, day and year), time-of-day, and the time zone from the 10-key pad.
5. Touch [SET] to start the clock.

(4) RAM Clear

<Use>

- To clear the following data at the center.
  ID Code, Primary Setting, Date/Time Input (Time Zone), Software SW Setting and AT Command.
- To be used for setting CS Remote Care.
- To be used for reset the every data of the center to default.

NOTE

- **If RAM clear is selected during transmission, RAM clear processing will be implemented at the time the transmission is completed regardless of whether it is done properly or not.**

<Procedure>

- The default setting is “Unset.”

Set	“Unset”

(5) Communication Log Print

<Use>

- To print out the communication log.
- Use to output and use the communication log.

<Procedure>

1. Call the Service Mode on the screen.
2. Touch [CS Remote Care].
3. Touch [Detail Setting] to access communication log print.
4. Load tray 1 or bypass tray with A4S or $8^1/_2$ x 11 paper.
5. Press Start key to print out the communication log.

(6) Software Switch Setting

<Use>

- To change the CS Remote Care settings.

<Procedure>

- Refer to “Software SW setting for CS Remote Care” for the setting.
  See P.391

(7) Response Time Out

<Use>

- It sets the intervals for resending e-mails when transmission error occurred.
- It can be set only when [E-Mail] is selected by System Setting.
- To use when changing the intervals for resending e-mails when transmission error occurred.

<Procedure>

- The default setting is 60 minute.

“60 minute” (10 to 1440)

(8) AT Command

<Use>

- To set the command to be issued at the time of modem initialization.
- This setting is available only when [Modem] is selected for the system setting.

<Procedure>

- Enter the command and touch [SET] to register.

(9) Notification Setting

<Use>

- To make the settings of notification to the Center that is performed under unilateral communication via http.
- This setting is available only when [http2] is selected in System Setting.

<Procedure>

<Schedule>

- Set the schedule of notification to the center.
- Up to three different notification schedules can be registered.
- Select the notification cycle from [Day], [Week], or [Month].
  When selecting [Day] for the notification cycle, set the Day Frequency.
  When selecting [Week] for the notification cycle, set the Week Frequency and day of the week.
  When selecting [Month], set the Month Frequency and the date of the month.

<Center Notifi. Item>

- The following table shows each of the notification item keys and corresponding data.

[1]	Sales count data	[7]	EKC data
[2]	Error count data	[8]	Adjustment data
[3]	Service count data	[9]	Coverage data
[4]	Life count data Life cycle data	[10]	Not used
[5]	CSRC-System data Device config data	[11]	Not used
[6]	History data	[12]	Not used

NOTE

- **Multiple items of data can be selected and sent at one time. However, be sure that only EKC data cannot be sent together with other items of data.**

D. Server Setting (E-Mail1 or E-mail2 is selected.)

(1) Server for RX-POP3 server

<Use>

- To set the POP3 server address used for the CS Remote Care.
- To set the address of the POP3 Server.
- POP3 server address can be set with IP address or the domain name.

<Procedure>

<Input IP Address>

- IP address version 4 format
  [0 to 255].[0 to 255].[0 to 255].[0 to 255]

<Input FQDN>

- Enter the domain name.

(2) Server for RX-POP3 login name

<Use>

- To set the logon name for the POP3 server used for the CS Remote Care.

<Procedure>

- The default setting is No.
- Up to 64 characters (alphanumeric characters and symbols) can be used.

(3) Server for RX-POP3 password

<Use>

- To set the logon password for the POP3 server used for the CS Remote Care.

<Procedure>

- The default setting is No.
- Up to 15 characters (alphanumeric characters and symbols) can be used.

(4) Server for RX-POP3 port number

<Use>

- To set the POP3 port number used for the CS Remote Care.

<Procedure>

- The default setting is 110.

"110" (1 to 65535)

(5) Receive-E-mail Address

<Use>

- To set the e-mail address used for the CS Remote Care.

<Procedure>

- The default setting is No.
- Up to 129 characters (alphanumeric characters and symbols) can be used.

(6) Receive-Mail Check

<Use>

- To set whether or not to use mail check and the time interval for the POP server used for the CS Remote Care.
- To change the time interval for mail check.

<Procedure>

- The default setting is No.

"No" (1 to120 min., No)

(7) Receive-Connection timeout

<Use>

- To set the timeout period for connection during reception.

<Procedure>

- The default setting is 60 Sec.

"60 Sec" (30 to 300 Sec)

(8) Receive-APOP Authentication

<Use>

- To set whether or not to authenticate the APOP during reception.

<Procedure>

- The default setting is No.

Yes "No"

(9) Send-SMTP server

<Use>

- To set the SMTP sever address for transmission used for the CS Remote Care.
- SMTP server address can be set by the IP address or the domain name.

<Procedure>

<Input IP Address>

- IP address version 4 format
  [0 to 255].[0 to 255].[0 to 255].[0 to 255]

<Input FQDN>

- Enter the domain name.

(10) Send-SMTP port number

<Use>

- To set the SMTP port number for transmission used for the CS Remote Care.

<Procedure>

- The default setting is 25.

"25" (1 to 65535)

(11) Send-SMTP Connection Time-out

<Use>

- To set the timeout period for transmission.

<Procedure>

- The default setting is 60 Sec.

"60 Sec" (30 to 300 Sec)

(12) Send-Authentication Setting

<Use>

- To set whether or not to authenticate during transmission via SMTP server.
- To use when authenticating during transmission.
  Available authentication mode: POP Before SMTP, SMTP authentication

<Procedure>

- The default setting is OFF.

"OFF" POP Before SMTP SMTP Authentication

* Setting to "POP Before SMTP" will set the time for POP Before SMTP.

- The default setting is 60 Sec.

"60 Sec" (0 to 60 Sec)

* When setting to SMTP authentication, touch the "Setting Check" key for authentication.

User ID	: Enter the user ID for SMTP authentication.
Password	: Enter the password for SMTP authentication.
Domain name	: Enter the domain name for SMTP authentication.

(13) TX/RX Test

<Use>

- To determine the correct transmission and reception using CS Remote Care.

<Procedure>

- Press the Start key to let the machine start the transmission and reception test.
- The test procedure and result will be displayed on the screen.

(14) Data Initialization

<Use>

- To initialize the contents for the sever setting.

<Procedure>

- The default setting is No.

Yes "No"

E. Server Setting (http1 or http2 is selected)

(1) HTTP Server Settings

<Use>

- To set a http server at the other end that is used in CS Remote Care.

<Procedure>

<URL>

- To set the address of the http server.

<Account>

- To set an account that is used to access the http server.

<Password>

- To set a password that is used to access the http server.

<Port Number>

- To set a port number that is used to access the http server.

(2) Proxy/SSL

<Use>

- To make proxy/SSL settings of the http server at the other end that is used in CS Remote Care.

<Procedure>

<Proxy Server>

- To set whether or not to use a proxy server.

<SSL Settings>

- To set whether or not to use SSL communication.

(3) Data Initialization

<Use>

- To initialize values in the server settings.

12.7.9 List of the CS Remote Care error code

A. When connecting by modem

Error code	Error	Solution
0001	The line is busy (Busy detection)	• Transmit again manually.
0002	Failure of the Modem default setting at transmitting (When the transmission completes with modem initial setting failed)	• Check if the power of the modem is ON. • Check the connecting condition between the modem and the main body.
0003	Timeout of CONNECT at transmitting (No response to ATD)	• Transmit again manually. • Check if the power of the modem is ON. • Check the connecting condition between the modem and the main body.
0005	Timeout of CONNECT at receiving (No response to ATA)	• Check if the power of the modem is ON. • Check the connecting condition between the modem and the main body.
0006	Shut down of the data modem line (Host) (Carrier OFF is detected)	• No solution, because the line is shut down at the host side.
0008	Timeout of start request telegram delivery (Start request telegram is not delivered after line connection)	• Transmit again manually.
0009	Timeout of finish request telegram delivery (Finish request telegram is not delivered (Start of shut down).)	• Transmit again manually.
000A	Receiving rejection (Receiving is made when the main body is set to reject receiving.)	• Check the setting condition of the host side. • Check the setting condition of the main body side.
000B	RS232C driver over run (When the modem detects over run.)	• If the same error is detected several times, turn the modem power OFF and ON.
000C	If the same error is detected several times, turn the modem power OFF and ON.	• If the same error is detected several times, turn the modem power OFF and ON.
000D	Break Interrupt (BI) indicator (When the modem detects Break Interrupt (BI) indicator.)	• If the same error is detected several times, turn the modem power OFF and ON.
0011	Baud rate ERROR (When selected baud rate is out of the specification (9600 bps to 38400 bps).)	• Check the baud rate of the software DipSW.
0018	Machine ID has already been registered (Request telegram 2 (SET-UP) comes from the main body that has already registered machine ID.)	• Set the initial registrations again for all including the host side.
0019	Center ID error (Center ID of the host is not identical with the one of start request telegram.)	• Check center ID setting of the main body side. • Check center ID setting of the main body side.

Error code	Error	Solution
001A	Device ID inconsistency (Device ID of the host is not identical with the one of start request telegram.)	• Check device ID setting of the main body side. • Check the setting of the host side.
001B	Device ID unregistered (Request telegram 2 (Constant data transmitting, emergency call) comes from the main body that has not registered machine ID yet.)	• Check device ID setting of the main body side. • Check the setting of the host side.
001E	Impossible to change (during printing) (Setting cannot be changed because the setting change is made during the machine is printing or starts printing.)	• Try again when the machine is not printing.
0020	Timeout of telegram delivery (At waiting mode of telegram delivery the machine fails to receive the telegram in a given time.)	• Try communication again.
0027	Transmission / receiving collision (Receiving is detecting during transmitting processing)	• Try communication again.

NOTE

- **When a code other than the ones listed above is displayed, contact KMBT and inform the error code.**

B. When connecting by e-mails

Error code	Error	Solution
0001	Connection timeout during transmission	• Check the SMTP server on User side.
0###	Transmission error ###: SMTP responding code (hexadecimal) For SMTP responding code, see RFC issued by IETF after converting hexadecimal number into decimal one.	• Check the SMTP server on User side.
0003	Connection timeout when receiving	• Check the POP3 server on User side.
0005	Receiving error	• Check the POP3 server on User side.
0020	SMTP communication error	• Check SMTP authentication setting.
1030	Machine ID mismatching • Received an e-mail which tells that machine ID mismatches.	• Check the machine ID setting. • Check the machine ID setting on host side.
1050	Grammar error • Received mail did not define the CS Remote Care command (2 digits). • The Type of Subject and the command of attached file are not consistent.	• Check mail content.

Error code	Error	Solution
1061	Modifying not allowed • The host sent a command mail that asked modifying data of item where setting change is not allowed.	• Ask the host to send another instruction mail for modifying.
1062	Modifying not available due to the copy job currently performing • When informing the host that it cannot be modified due to the copy job currently performing.	• Ask the host to send another instruction mail for modifying.
1080	Data length problem • LEN value of TEXT data and actual data length are not consistent.	• Ask the host to send another instruction mail for modifying.
1081	Frame No. error • The last frame has not been received. • There are missing frame No.	• Check the status of the machine registration on host side.
1082	Subject Type problem • Received code did not define the Type of Subject.	• Ask the host to send another instruction mail for modifying.
1084	Date expired • Expiration date for data modification command has passed.	• Ask the host to send another instruction mail for modifying.
1091	Oversized command • Received attached file exceeds the machine's receive buffer size.	• Ask the host to send another instruction mail for modifying.
1092	Received an error mail when center setup is not complete	• Check the status of the machine registration on host side.
2039	Socket is not connected. • LAN cable on the copier side is detached.	• Check the SMTP server and POP3 server on user side.
203C	Connection timeout	• Check timeout setting
203E	Network is down. • LAN cable on the copier side is detached.	• Check the connection between the copier on the user's side and the network connector. • Check the network environment on the user's side.
3000	POP3_AUTHORIZATION_ERR	• Check the POP3 server environment on user's side.
3001	POP3_TRANSACTION_ERR	• Check the POP3 server environment on user's side.
3002	POP3_CONNECT_ERR	• Check the POP3 server environment on user's side.
3003	POP3_TIMEOUT_ERR	• Check the POP3 server environment on user's side.
3004	POP3_FORMAT_ERR	• Check the POP3 server environment on user's side.
3005	POP3_MEMORY_ERR	• Check the POP3 server environment on user's side.
3006	POP3_JOBID_ERR	• Check the POP3 server environment on user's side.
3007	POP3_NO_DATA_ERR	• Check the POP3 server environment on user's side.

Error code	Error	Solution
3008	POP3_DELETE_FAIL_ERR	• Check the POP3 server environment on user's side.
3009	POP3_MAILBOX_FULL	• Check the POP3 server environment on user's side.
4103	During polling from MFP, MIO is not active and MFP cannot start communication.	• Wait for a while and try transmitting again.
4104	During e-mail transmission from MFP to the center, the SMTP channel is not in the "Ready" status and MFP cannot send e-mail.	• Wait for a while and try transmitting again.
4105	During polling from MFP, the POP3 channel is not in the "Ready" status and MFP cannot receive e-mail.	• Wait for a while and try transmitting again.
4106	During e-mail transmission from MFP to the center, MIO is not active and MFP cannot start communication.	• Wait for a while and try transmitting again.
41F9	Control error • In the CS Remote Care's internal sequence, message transfer failed.	• Turn the main power switch OFF and then ON.
41FA	Control error • MIO response timed out.	• Turn the main power switch OFF and then ON.
41FB	Control error • As the file descriptor of the e-mail that MFP receives from MIO is invalid, MFP cannot receive the e-mail.	• Turn the main power switch OFF and then ON.
41FC	Control error • During the creation of data to be sent by e-mail, the CS Remote Care's internal status error occurs or the data that need to be sent has not been created.	• Turn the main power switch OFF and then ON.
41FD	Control error • During e-mail reception, the parameter sent from MIO to the CS Remote Care is invalid and MFP cannot receive the e-mail.	• Turn the main power switch OFF and then ON.
41FE	Control error • After the completion of e-mail transmission, MFP received the transmission completion message from MIO. However, the CS Remote Care's internal status was not the status of transmission completion.	• Turn the main power switch OFF and then ON.
41FF	Control error • During e-mail reception, MIO became inactive.	• Turn the main power switch OFF and then ON.
4210	Control error • E-mail sent from MIO could not be properly handled in the CS Remote Care.	• Turn the main power switch OFF and then ON.
5***	MIO detects error when sending an attached file.	• Check the SMTP server /POP3 server environment on user's side.
6***	MIO detects error during a sending sequence.	• Check the SMTP server /POP3 server environment on user's side.

NOTE

- **When a code other than the ones listed above is displayed, contact KMBT and inform the error code.**

C. When connecting by http

Error code	Error	Solution
0001	Connection timeout during transmission	• Check the http server.
0***	Transmission error ###: http responding code (hexadecimal) For http responding code, see RFC issued by IETF after converting hexadecimal number into decimal one.	• Check the http server.
0003	Connection timeout when receiving	• Check the http server.
0005	Receiving error	• Check the http server.
1030	Machine ID mismatching • Received a file which tells that machine ID mismatches.	• Check the machine ID setting. • Check the machine ID setting on host side.
1050	Grammar error • Received file did not define the CS Remote Care command (2 digits). • The Type of Subject and the command of file are not consistent.	• Check file content.
1061	Modifying not allowed • The host sent a command file that asked modifying data of item where setting change is not allowed.	• Ask the host to send another instruction file for modifying.
1062	Modifying not available due to the copy job currently performing • When informing the host that it cannot be modified due to the copy job currently performing.	• Ask the host to send another instruction file for modifying.
1080	Data length problem • LEN value of TEXT data and actual data length are not consistent.	• Ask the host to send another instruction file for modifying.
1081	Frame No. error • The last frame has not been received. • There are missing frame No.	• Check the status of the machine registration on host side.
1082	Subject Type problem • Received code did not define the Type of Subject.	• Ask the host to send another instruction file for modifying.
1084	Date expired • Expiration date for data modification command has passed.	• Ask the host to send another instruction file for modifying.
1091	Oversized command • Received file exceeds the machine's receive buffer size.	• Ask the host to send another instruction file for modifying.

Error code	Error	Solution
2001	http request result problem • Internal status error	• Check user network environment. • Check http server environment.
2002	http request result problem • File list acquisition result problem	
2003	http request result problem • Request header transmission failure	
2004	http request result problem • Request body transmission failure	
2005	http request result problem • Response header receive response failure	
2006	http request result problem • Response body receive response failure	
2007	http request result problem • Session ID inconsistent	
3002	http request result problem • Unopened client ID was specified	
3003	http request result problem • Receive time out occurred	
3004	http request result problem • Receive error occurred. Or wrong request URL was specified.	
3005	http request result problem • Content-Length or receive size exceeded the specified max. transfer size. Message body size was too large.	
3006	http request result problem • Due to reset, process was stopped. Or message body size exceeded the specified max. transfer size.	
3007	http request result problem • Internal error occurred. Or due to internal reset, process was stopped.	
3008	http request result problem • Connection to WebDAV server failed.	
3009	http request result problem • Error occurred during transmission to the WebDAV server.	
3010	http request result problem • Time out occurred during transmission to the WebDav server.	
3011	http request result problem • Connection to the proxy server failed.	
3012	http request result problem • The proxy server refused CONNECT request.	
3013	http request result problem • The proxy server was set to enabled, but the proxy server host was not set.	
3014	http request result problem • Proxy server authentication failed.	

Error code	Error	Solution
3015	http request result problem • Other errors were sent from the proxy server.	• Check user network environment. • Check http server environment.
3016	http request result problem • Internal error occurred.	
3017	http request result problem • As the device application specified MIO_REQBODY_ERROR, process was stopped.	
4106	When data is uploaded from MFP to the web server, the network connection is not enabled and MFP cannot start communication.	• Wait for a while and try transmitting again.
41FA	Control error • MIO response timed out.	• Turn the main power switch OFF and then ON.
5***	MIO detects error at file sending.	• Check the http server environment.
6***	MIO detects error at sending sequence.	• Check the http server environment.

NOTE

- **When a code other than the ones listed above is displayed, contact KMBT and inform the error code.**

D. When connecting by Fax modem

Error code	Error	Solution
T50	Host terminal ID not correct	• Check the telephone number set for host.
R80	Serial number received from the host not correct.	• Check the status of the Machine registration on host side.
R81	Disconnection of writing instruction from host during machine is running.	• Wait for a while and try transmitting again.
R82	Disconnection of FAX-CSRC instruction when FAX-CSRC is not allowed.	• Check the status of the Machine registration on host side.
R83	Host command error.	• Contact KMBT and inform the error code.
R84	NVRAM writing error.	• Contact KMBT and inform the error code.

NOTE

- **When a code other than the ones listed above is displayed, see the TROUBLE SHOOTING.**

12.7.10 Troubleshooting for CS Remote Care

If communication is not done properly, check the condition by following the procedures shown below.

1. Shift the screen in the order of [Service Mode] → [CS Remote Care] → [Detail Setting]. At this time, in the cases of initial transmitting / administrator transmitting / maintenance start transmitting / maintenance finish transmitting, the communication result will be displayed at the top of the screen.

* For the communication result, the following message will be displayed based on its success or failure.

Display of communication result	Cause	Solution
Communicating	—	—
Communication trouble with the center	Although the machine tries to communicate with the center, there is any trouble and the communication completes unsuccessfully.	• See the list of error message and confirm the corresponding point. See P.409
Complete successfully	—	—
Modem trouble	Although the machine tries to communicate with the center, there is any trouble in the modem.	• Check if the power of modem in ON. • Check if there is any problem in connection between the modem and the main body.
Busy line	Although the machine tries to communicate with the center, the line to the center is busy.	• Communicate with the center again.
No response	Although the machine tries to communicate with the center, there is no response from the center.	• Communicate with the center again. • Check the communication environment of the center side.

12.7.11 CS Remote Care Operation under Enhanced Security Mode

CS Remote Care can be used even when “ON” is selected in [Administrator Settings] → [Security Settings] → [Enhanced Security Mode].
However, to keep the enhanced security level, the following restrictions are accompanied.

- Only SSL communication is available.
- Error occurs if the Center tries to send the following commands.
  - Firmware update command
  - Command of reading and updating account track information
  - Machine settings update command
  - Command of reading and updating Internet ISW setting information

12.8 System 1

12.8.1 Marketing Area

A. Use

- To make the various settings (language, paper size, fixed zoom ratios, etc.) according to the applicable marketing area.
- Upon setup.

B. Procedure

<Marketing Area>

- Select the applicable marketing area and touch [END] to set the marketing area.

JAPAN	US	Europe	Others1
Others2	Others3	Others4	Others5

<Fax Target>

1. Touch the [Fax Target].
2. Select the applicable marketing area using [+] and [-] keys, and touch [END].

(1) List of functions affected by marketing area setting

- The listed are the functions of which setting is automatically changed depending on the selected marketing area.

Marketing area / Setting item	JAPAN	US	Europe	Others1	Others2	Others3	Others4	Others5
Language (Default value)	Japanese	English	English	English	English	Simplified Chinese	Traditional Chinese	English
Language Selection (Selectable language)	Japanese English French Italian German Spanish	English French Italian German Spanish Japanese	English French Italian German Spanish Japanese	English French Spanish Japanese	English French Spanish Traditional Chinese	Simplified Chinese English	Traditional Chinese English	English French Spanish Hangul
Additional selectable language when the UK-203 is installed.	Simplified Chinese Traditional Chinese Hangul	Simplified Chinese Traditional Chinese Hangul	Simplified Chinese Traditional Chinese Hangul	Italian German Simplified Chinese Traditional Chinese Hangul	Italian German Japanese Simplified Chinese Hangul	French Italian German Spanish Japanese Traditional Chinese Hangul	French Italian German Spanish Japanese Simplified Chinese Hangul	Italian German Japanese Simplified Chinese Traditional Chinese
Foolscap size	8 x 13	8 x 13	8 x 13	8 x 13	8 x 13	8 x 13	8 x 13	8 x 13
LCT size	A4 LEF	Letter LEF	A4 LEF	A4 LEF	A4 LEF	A4 LEF	A4 LEF	A4 LEF
Unit	Metric	Inch	Metric	Metric	Metric	Metric	Metric	Metric
Total counter mode	Mode1	Mode2	Mode2	Mode2	Mode2	Mode2	Mode2	Mode2
Size counter	No count	A3, 11x17	A3,B4, 11x17, $8^1/_2$x14	A3,B4, 11x17, $8^1/_2$x14	A3,B4, 11x17, $8^1/_2$x14	A3,B4, 11x17, $8^1/_2$x14	A3,B4, 11x17, $8^1/_2$x14	A3,B4, 11x17, $8^1/_2$x14
Unit Change	Japan	US	Europe	Europe	Europe	Europe	Europe	Europe

NOTE

- **The language used in the service mode depends on the Language Selection setting, and changes to the language as following table.**

Language Selection	Service Mode
Japanese	Japanese
Simplified Chinese	Simplified Chinese
Traditional Chinese	Traditional Chinese
Hangul	Hangul
Language other than listed above	English

12.8.2 Tel/Fax Number

A. Use

- To enter the tel/fax number of the service contact that will appear on the control panel when a malfunction occurs in the machine.
- Upon setup.

B. Procedure

- Enter the tel/fax number (19 digits) from the 10-key pad.
- Use Interrupt key to enter "-."

12.8.3 Serial Number

A. Use

- To register the serial numbers of the machine and options.
- The numbers will be printed on the list output.
- To use the serial number as machine ID during CS Remote Care communication.
- Upon setup.

NOTE

- **When main power switch was turned ON while the serial No. was not entered, the message to require entering the serial No. will be displayed.**
- **Do not change the serial number registered in the machine. If memory data is lost and entering the serial number is required, enter the original correct serial number. Be careful to enter the correct serial number since characters other than alphanumeric can be also entered. CSRC communication is not available if a wrong serial number is entered.**
- **The serial number of "Printer" can be checked through the following: [Utility] → [Meter Count] → [Check Details].**

B. Procedure

- Type the serial numbers.
  Printer, Scanner, ADF, LCT, Sorter/FN, Duplex, Vendor, Fax1, Fax2, RU, ZU (Not used)

12.8.4 Sleep ON/OFF Choice Setting

A. Use

- To display the option of “OFF” for the sleep mode setting screen available from administrator settings.

NOTE

- **The sleep mode will begin in 48 hours even if it sets it to “OFF.”**

B. Procedure

- The default setting is Prohibit.

Permit	“Prohibit”

12.8.5 Foolscap Size Setting

A. Use

- To set the size for foolscap paper.
- Upon setup.

B. Procedure

- Select the size from among the following five.

$8^1/_2$ x $13^1/_2$	220 x 330 mm	$8^1/_2$ x 13	$8^1/_4$ x 13	$8^1/_8$ x $13^1/_4$	8 x 13

12.8.6 Original Size Detection

A. Use

- To change the document size detection table.
- Use to change the setting for the document size detection table.

Copy Glass : To change the size detection table for the document glass.

$8^1/_2$ x 14/Foolscap Size Detection

: To set whether paper of $8^1/_2$ x $13^1/_2$ size is detected as $8^1/_2$ x 14 or foolscap in original glass or ADF size detection.
When Table 1 is selected in Copy Glass, paper of $8^1/_2$ x $13^1/_2$ size is detected as foolscap despite of the setting of $8^1/_2$ x 14/Foolscap Size Detection.

ADF Size Detection

To set whether to use 8K/16K or B standards (8K ⇔ B4, 16K ⇔ B5) for original size detection on the ADF.
(This setting is available only when “Other3” is selected in [Service Mode] → [System 1] → [Marketing Area].)

B. Procedure

<Copy Glass>

- The default setting is Table1.

"Table1"	Table2

NOTE

- **Table 2 can be set only when original size detection sensor 2 is being mounted.**

<81/2 x 14/Foolscap Size Detection>

- The default setting is $8^1/_2$ x 14.

"$8^1/_2$ x 14"	Foolscap

<ADF Size Detection>

- The default setting is K Size.

"K Size"	B series

12.8.7 Install Date

A. Use

- To register the date the main body was installed.
- Upon setup.

B. Procedure

1. Call the Service Mode on the screen.
2. Select the key as follows.
   [System 1] → [Install Date].
3. Enter the date (Year 4 digit → Month 2 digit → date 2 digit) from the 10-key pad.
4. Touch [Entry] to set the date of installation.

12.8.8 Initialization-Clear All Data

A. Use

- To initialize the setting data.
- For details on items to be cleared, see "CONTENTS TO BE CLEARED BY RESET FUNCTION."
  See P.562

NOTE

- **When removing or installing the hard disk after registering the data below, be sure to clear the data.**
  Referring data: One-touch registration, user authentication/account track.

B. Procedure

1. Call the Service Mode to the screen.
2. Select the key as follows.
   [System 1] → [Initialization] → [Clear All Data].
3. Press the Start key.
4. When [OK] is displayed, turn off the main power switch and turn it on again more than 10 seconds after.

12.8.9 Initialization-Clear Individual Data

- Clear Individual Data enables you to select and clear multiple items at a time.

A. Copy Program Data

(1) Use

- To clear data registered as copy program.
- Use this feature to clear all copy program data at a time.

(2) Procedure

1. Call the Service Mode on the screen.
2. Select the key as follows.
   [System 1] → [Initialization] → [Copy Program Data].
3. Press the Start key.
4. When [OK] is displayed, turn off the main power switch and turn it on again more than 10 seconds after.

B. Address Registration Data

(1) Use

- To clear address registration data.
- Use this feature to initialize address registration data.
- The following are address registration data:
  Group address data, Program key data, One-touch destination data, Mail body data, Subject data, Prefix/suffix data

(2) Procedure

1. Select the key as follows.
   [System 1] → [Initialization] → [Address Registration Data].
2. Press the Start key.
3. When [OK] is displayed, turn off the main power switch and turn it on again more than 10 seconds after.

C. Fax Setting Data

(1) Use

- To clear fax-related settings and parameters. However, address-related data is not cleared.
- Use this feature to clear fax-related settings and parameters at a time.

(2) Procedure

1. Select the key as follows.
   [System 1] → [Initialization] → [Fax Setting Data].
2. Press the Start key.
3. When [OK] is displayed, turn off the main power switch and turn it on again more than 10 seconds after.

D. All History Data

(1) Use

- To clear history data.
- The following are history data:
  Job history, Journal history, Receive reject history, Destination history,
  Job secure counter (Internal data for history management)

(2) Procedure

1. Select the key as follows.
   [System 1] → [Initialization] → [All History Data].
2. Press the Start key.
3. When [OK] is displayed, turn off the main power switch and turn it on again more than 10 seconds after.

E. Network Setting Data

(1) Use

- To clear network-related settings.
- Use this feature to initialize and set network-related settings again when the machine does not work properly upon change of network-related settings.

(2) Procedure

1. Select the key as follows.
   [System 1] → [Initialization] → [Network Setting Data].
2. Press the Start key.
3. When [OK] is displayed, turn off the main power switch and turn it on again more than 10 seconds after.

12.8.10 Initialization-System Error Clear

A. Use

- To reset the trouble data.
- Use to clear the [Jam], [Trouble], [Error] displays, and other improper displays.
- For details on items to be cleared, see “CONTENTS TO BE CLEARED BY RESET FUNCTION.”
  See P.562

B. Procedure

1. Call the Service Mode to the screen.
2. Select the key as follows.
   [System 1] → [Initialization] → [System Error Clear].
3. Press the Start key.
4. When [OK] is displayed, turn off the main power switch and turn it on again more than 10 seconds after.

12.8.11 Problem Unit Isolation Set.

A. Use

- Individual units and options have a set or unset setting for the problem unit isolation function.
- When a problem occurs, this function enables the continuous use of the units that are not affected by separately controlling them and isolating other units that have a problem.
- The machine isolates only units that have a “set” setting.

NOTE

- **The malfunction detection mechanism is not applied to units and options that are being isolated.**
- This function can be selected for the following units and options.
  Tray 1, Tray 2, Tray 3, Tray 4, LCT, manual, Half-Fold/Tri-Fold Center Stapling, Staple, Scanner, ADF
- Though Problem Unit Isolation Set. is not selected, if the specified malfunctions occur on the above listed units or options, an alert screen appears and asks users whether to isolate the units or options where malfunction occurs.
  See the “Trouble shooting” section for the corresponding trouble codes.
  See P.604

B. Procedure

- The default setting is Unset for individual units and options.

Set “Unset”

- After changing the setting, touch [Decision] and turn the main power switch OFF and ON to make the new setting effective.

12.8.12 Machine State LED Setting

A. Use

- To set how to display main body statuses on the machine state LED (state display lamp, paper empty lamp).
- Each of Type1 and Type2 has the following LED display forms.

Machine State LED Setting		Type1	Type2
Warning statuses	Attention • Toner supply door open • Improper toner bottle placement	Blinking	Blinking
	Near life	Blinking	Unlit
	Alert code	Unlit	Unlit
	Problem unit isolation	Blinking	Blinking
	Fatal error • Trouble code • Jam • Door opened • Life stop	Lit	Lit
Amount of paper remaining (Tray 1 and 2)	100 % to near empty	Unlit	Unlit
	Near empty	Blinking	Unlit
	Empty	Lit	Lit
	Being lifted up Door opened or closed	Unlit	Unlit
Amount of paper remaining (Tray 3 and 4)	100 % to near empty	Unlit	Unlit
	Near empty	Blinking	Unlit
	Empty	Lit	Lit
	Being lifted up Door opened or closed	Unlit	Unlit

B. Procedure

- Each default setting is Type2.

Type 1 “Type 2”

12.9 System 2

12.9.1 HDD

- Making this setting is necessary only on the machine models and in the marketing areas where the hard disk is set as an option. If the hard disk is standard on the machine or in the marketing area, changing this setting is unnecessary.

A. Use

- To set whether the machine has the hard disk or not.
- Use this setting when installing the optional hard disk HD-516.
- After installing the hard disk HD-516, if you change this setting from [Not Installed] to [Installed], the machine backs up the authentication related data stored in NVRAM to SSD as a preparation of transferring data stored in SSD to the hard disk.
  The backup data is restored when [SSD -> HDD Data Copy] is performed.
  See P.473

B. Procedure

- The default setting depends on each marketing area and machine model.

Installed Not Installed

NOTE

- **If an unformatted hard disk is installed and this setting is changed, the trouble code "C-D010" appears after the main power switch is turned OFF/ON. In this case, perform the logical format.**
- **If the machine has a hard disk lock password or a HDD encryption word, changing this setting to [Not Installed] is impossible.**
- **If this setting is changed from [Installed] to [Not Installed], data relating to user authentication/account track are cleared.**
- **Be aware that if you change this setting of HDD installation, the following settings are also automatically changed.**

[Not Installed] -> [Installed]	[Installed] -> [Not Installed]
"ON" is automatically selected in [Utility] → [User Settings] → [Printer Settings] → [Basic Settings] → [Spool Print Jobs in HDD before RIP]. (When you touch [Installed], "ON" becomes selected.)	"OFF" is automatically selected in [Utility] → [User Settings] → [Printer Settings] → [Basic Settings] → [Spool Print Jobs in HDD before RIP]. (When you touch [Not Installed], "OFF" becomes selected.)
	"OFF" is automatically selected for IP Address Fax and Internet Fax in [Service Mode] → [System 2] → [Network FAX Settings].
	If the browser start mode is set to authentication mode, the mode setting is automatically changed from authentication mode to normal mode.
	If the authentication setting is the authentication mode that uses the intermediate authentication server, the authentication mode is automatically canceled.

12.9.2 Image Controller Setting

A. Use

- To set the type of the controller.
- [Peripheral Mode] appears when [Others] is selected.
- When setting up the controller.

B. Procedure

Image Controller Setting

- Select the controller to be used.

  "Controller 0" : The standard controller is used.
  Controller 1 : undefined.
  Controller 2 : undefined.
  Controller 3 : undefined.
  Others : undefined.

Peripheral Mode

- Select the operating mode of the Scanner.

  Mode 1: undefined.
  Mode 2: undefined.
  Mode 3: undefined.

12.9.3 Option Board Status

A. Use

- To set when the optional fax board (FK-508) or DSC board (SC-507) is mounted.
- Use when setting up the optional fax kit (FK-508) or security kit (SC-507) is mounted.

B. Procedure

- The default settings are "Unset."

Fax (circuit 1)	: Set	"Unset"
Fax (circuit 2)	: Set	"Unset"
DSC1	: Set	"Unset"
DSC2	: Not used	

NOTE

- **When the setting has been changed, turn off the main power switch and turn it on again more than 10 seconds after.**

12.9.4 Consumable Life Reminder

A. Use

- To select whether or not to give the display of PM parts lifetime
  PM parts lifetime display : An entire screen warning is given when the service life of a specific unit has been reached, prompting the user to replace the part.
- Applicable units:
  Fusing unit, ozone filter, transfer roller unit, developing unit, drum unit, developer
- Use to select not to give the display of PM parts lifetime.
  Yes : A malfunction code and an entire screen warning appear on the control panel when the life value is reached.
  No : A malfunction code appears at a lower portion of the screen and a one-line message appears at the upper portion of the screen when the life value is reached.

B. Procedure

- The default setting is No.

Yes "No"

12.9.5 Unit Change

A. Use

- To select who is to replace a unit.
- Upon setup.
- When the unit life arrives, the warning display is intended for the specific person who is going to replace the unit.
  When "User" is selected : Printing is inhibited.
  When "Service" is selected : Life warning.
- To set whether or not to display a toner near empty warning.

B. Procedure

<Unit Change>

- The following are the default settings:

	Japan		US, Europe		Others1/2/3/4/5	
Toner Bottle	"User"	Service	"User"	Service	"User"	Service
Punch Dust Box	"User"	Service	"User"	Service	"User"	Service

<Warning Display>

Toner Near Empty : "Yes" No

12.9.6 Software Switch Setting

A. Use

- To set the operating characteristic of each function from software switch depending on what types of printing are normally made.

B. Procedure

1. Touch [Software Switch Setting].
2. Touch [Switch No.] and enter the intended switch number with the ten-key pad.
3. Touch [Bit Assignment].
4. Use [←] or [→] to select a bit. To set the bit, enter 0 or 1 with the ten-key pad.
5. To set the bit in hex, touch [HEX Assignment] and use the ten-key pad and [A] to [F] keys to enter numbers and characters.
6. Touch [Fix].

12.9.7 Software Switch Setting-Setting items in the software switch setting

A. Printing on paper of nonstandard size fed from the bypass tray (AnySize mode)

(1) Use

- To enable printing only by the setting made on the printer driver when printing is attempted on paper of nonstandard size fed by way of the bypass tray (the default setting is the conventional operation).
  bit0-0 : Conventional operation
  bit0-1 : The print cycle is initiated for the paper specified on the printer driver regardless of the bypass tray paper setting.

(2) Procedure

1. Touch [Software Switch Setting].
2. Touch [Switch No.] and enter “69” with the ten-key pad.
3. Touch [BIT Assignment] and select “bit0” with [←]/[→] key.
4. Enter “0” or “1” with the 10-key pad.
5. Touch [Fix].

12.9.8 CDD Calibration

A. Use

- To set whether to use the calibration adjustment value set prior to the shipping.
- To display the current calibration adjustment value.
- When CCD unit has been replaced, set to “OFF.”
  After replacing the CCD unit, the default generic value needs to be set since the calibration value set for each unit changes to control the differences in reading performance on each scanner (CCD).
- The original calibration adjustment value can be disabled to address image failure and other problems caused by individual CCD performance difference.

B. Procedure

- The default setting is ON.

“ON” OFF

NOTE

- **When the setting is changed, the function becomes available by turning the main power switch OFF and ON again.**

12.9.9 LCT Paper Size Setting

A. Use

- To set the paper size for the LCT.
- Use this feature upon LCT set-up.

B. Procedure

- The default setting depends on the setting made for the applicable marketing area.

A4	$8^1/_2$ x 11

12.9.10 Line Mag Setting

A. Use

- To set whether to use the offset value which has been set prior to the shipping.
- To display the current magnification offset value.
- When CCD unit has been replaced, set to “OFF.”
  After replacing the CCD unit, the default generic value needs to be set since the magnification offset value between the lines set for each unit changes to control the differences in reading performance on each scanner (CCD).
- The original offset value can be disabled to address image failure and other problems caused by individual CCD performance difference.

B. Procedure

- The default setting is ON.

“ON”	OFF

NOTE

- **When the setting is changed, the function becomes valid by turning the main power switch OFF and ON again.**

12.9.11 Data Capture

A. Use

- When an error occurs, it acquires the print job data in order to analyze the cause of the error.
- When an error occurs, this will be used to analyze the cause of the error according to the print job data.

B. Procedure

NOTE

- **The following conditions are necessary for this function.**
  When selecting [Security Setting] → [Security Details] → [Print Data Capture] in Administrator Settings, [Allow] must be set.
- **The hard disk must be mounted to the machine.**
- **When selecting [Administrator Settings] → [Network Settings] → [FTP Settings], [FTP Server Settings: ON] must be set.**

1. Select [Service Mode] → [System 2], and touch [Data Capture]. Select [ON].
   (While the Data Capture setting is [ON], the print job data from the PC will be stored in the hard disk.)

NOTE

- **Maximum 5 print job data can be stored, and the data will be overwritten beginning with the chronologically oldest one.**

2. Check the IP address of the machine.
3. Connect the PC (Windows) and the machine with ethernet cable.
4. Start the DOS command prompt of the PC, and specify the IP address of the machine to start FTP.

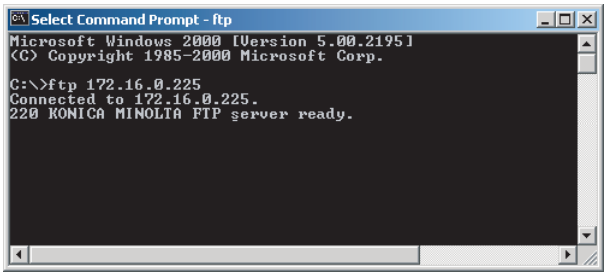

A0P0F3E547DA

5. Input the user name and the password.
   User name: capture
   Password: sysadm

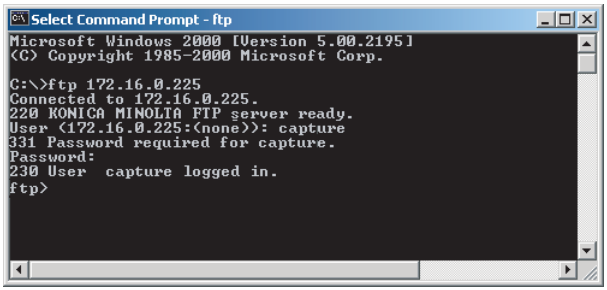

A0P0F3E548DA

6. Using the “ls” command, display the list of the file available for capture.

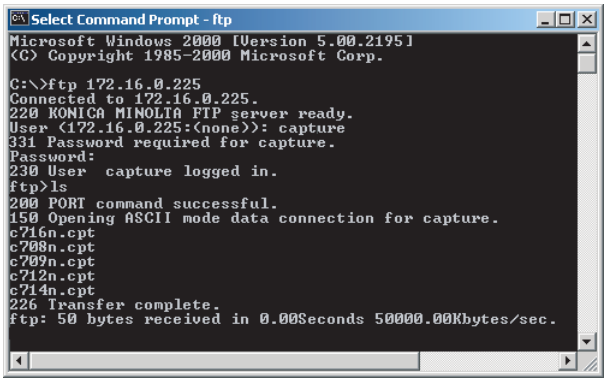

A0P0F3E549DA

7. Using the “binary” command, set the File transfer mode to the binary transfer.

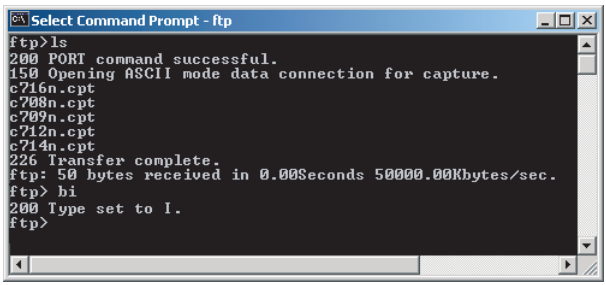

A0P0F3E550DA

8. Using the “get” command, transfer the data for capture to PC.

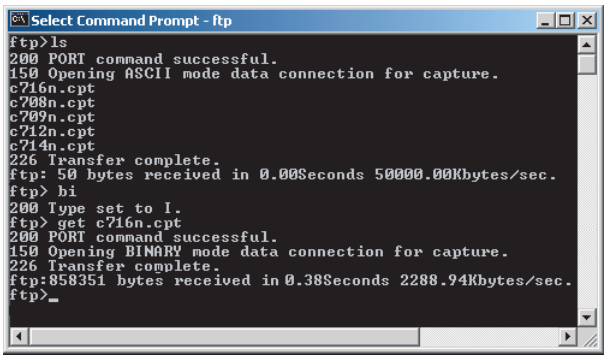

A0P0F3E551DA

9. Finish the command prompt.

NOTE

- **After receiving capture data, select [Administrator Settings] → [Security Settings] → [Security Details], and select [Restrict] for print data capture in order to delete the job data stored in the hard disk.**
  When HDD Format or Overwrite Temporary Data is performed, job data is deleted.

12.9.12 ADF Scan Glass Contamin. Set.-ADF Scan Glass Contamin. Sensitivity

A. Use

- To set the detection level for the pre-detection of stain on the ADF original glass.
- Use when changing the setting for whether or not to detect the stain on the ADF original glass when opening/closing ADF as well as its detection level as the main/sub power being ON, recovering from the sleep/low power mode, etc.
  Not Set : Detection of stain on the glass will not be conducted.
  Low : Stain on the glass will not be detected easily.
  Normal : Normal level detection.
  High : Stain on the glass will easily be detected.

NOTE

- **Be aware that selecting "Not Set" and performing the pre-detection with the following setting will display "NG."**
  [Service Mode] → [Machine] → [ADF Scan Glass Contamination]
- **When "Not Set" is selected, the original glass cleaning operation after the job ends does not operate.**

B. Procedure

- The default setting is "Normal."

Not Set	Low	"Normal"	High

12.9.13 ADF Scan Glass Contamin. Set.-ADF Scan Glass Contamin. Warn/Level

A. Use

- To set how to display the warning when stain on the ADF original glass is detected.
- Use when changing the display of the warning which requests the cleaning of the stain on the glass detected by the pre-detection of the lines.
  0: Warning will not be displayed.
  1: Warning will be displayed by the maintenance mark. (warning code: D-1/D-2)
  2: Warning will be displayed on the message area on the basic screen.
  3: Warning will be displayed on all screens.

NOTE

- **This setting is invalid when [ADF Scan Glass Contamin. Sensitivity] is set to "Not Set."**

B. Procedure

- The default setting is 2.

0	1	"2"	3

12.9.14 ADF Scan Glass Contamin. Set.-Feed Cleaning Settings

A. Use

- To set the operation for cleaning on the ADF original glass when feeding the original.
- Use when changing the operation for cleaning on the ADF original glass when feeding the original.
  - 0 : Cleaning is not conducted as the cleaning brush does not rotate.
  - 1 : Glass is cleaned with the cleaning brush rotating at two originals intermittent.

B. Procedure

- The default setting is 1.

0	“1”

12.9.15 Stamp

A. Use

- To set the mounting status of the optional stamp unit SP-501.
- To use when setting up the stamp unit SP-501.

B. Procedure

- The default setting is Unset.

Set	“Unset”

12.9.16 Network Fax Settings

A. Use

- To set whether or not to use network fax function.
- To use network fax function (IP address fax, internet fax).
- Selection will be available when each network fax function is set to “ON” in the following settings.
  [Administrator Settings] → [Network Settings] → [Network Fax Settings] → [Network Fax Function Settings]

B. Procedure

- The default settings are OFF.

IP Address Fax	: ON	“OFF”
SIP-Fax	: Not Used	
Internet Fax	: ON	“OFF”

12.9.17 User Paper Settings

A. Use

- To set and register individual user paper that includes a different basic weight, fusing temperature, image transfer output fine adjustment value.
- User Paper Settings is also available from [Administrator Settings] → [System Settings] → [Expert Adjustment] → [User Paper Settings].
- To register a paper type that is suitable for individual customer's intended use and use environment.
- The following shows user paper registration keys and corresponding paper types.
  User Paper 1/2 : Plain paper
  User Paper 3 : Thick1
  User Paper 4 : Thick2

B. Procedure

1. Call the Service Mode to the screen.
2. Select the key as follows.
   [System 2] → [▶] → [User Paper Settings].
3. Select the desired key from [User Paper 1] to [User Paper 4] to register user paper.
4. Select [Basic Weight] and enter a value with the [+]/[-] key.
5. Select [Heating Side] and enter a fusing temperature with the [+]/[-] key.
   The setting range is -20 °C to +10 °C. (1 step: 5 °C)
6. Select [Print Interval], and set the print interval setting.
   See P.379
7. Select one from the following: [Front] or [Back]. Enter a image transfer output fine adjustment value with the [+]/[-] key.
   The setting rage is -7 to +8. (1 step: 1 increment or decrement)
8. Set paper of A4S or 8$^{1}/_{2}$ x 11S on the manual tray.
9. Select [1-side] (only front side) or [Front side] (only back side) and press the Start key.
10. Check the image of the output test pattern.
    If the image is not acceptable, adjust the settings and output the test pattern again.

(1) Test Pattern in User Paper Settings

- The printable test pattern for user paper settings is provided to ease determining the most appropriate 2nd image transfer output value when customizing user paper.
- This test pattern changes output voltage as shown below based on the standard voltage A (voltage determined by the image auto transfer voltage control) on a sheet of paper.

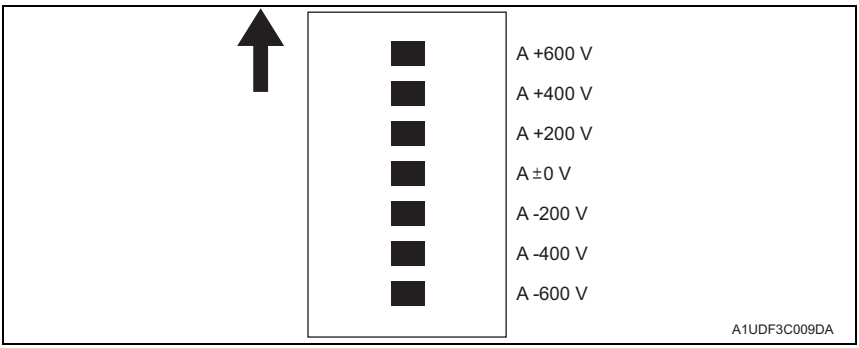

12.9.18 Coverage Rate Screen

A. Use

- To set whether or not to display a coverage rate on the sales counter screen and sales counter list.

B. Procedure

- The default setting is Display.

"Display"	Do Not Display

12.9.19 JAM Code Display Setting

A. Use

- To set whether or not to add a jam code to a jam warning display on the control panel when a jam occurs.

B. Procedure

- The default setting is Do Not Display.

Display	"Do Not Display"

12.9.20 BootUp Screen

A. Use

- To customize the BootUp Screen displayed upon machine start-up.
- Use this feature when changing the KonicaMinolta logo displayed on the control panel upon start-up to a client company logo or others for client's intended use of the machine.
- Register logo data in the machine's flash ROM via a USB memory device.
  The following are the logo data specifications that should be met.

Image format	: PNG format
File extension	: *. png
File name	: BootupScreen.png
Image size	: 800 x 480 dots
Color	: 256 colors (Palette that the machine specifies is used.)

NOTE

- **When making the logo data, use the exclusive image making tool.**
- **If a USB memory device is not connected or a nonconforming USB memory device is connected, "USB NG" is displayed and logo data cannot be registered.**
- **If the file name of logo data does not conform to the above specifications, "File NG" message is displayed and logo data cannot be registered.**

B. Procedure

1. Save logo data that conforms to the above specifications in the root directory of a USB memory device.

NOTE

- **Be sure to save data in the root directory as the machine cannot detect data saved in other directories.**

2. Connect the USB memory device to the machine USB port.
3. Select the key as follows.
   [System 2] → [▶] → [BootUp Screen].
4. Touch [Set].
5. Check result “OK” is displayed and touch [END].

NOTE

- **If logo data is already registered, new logo data overwrites the existing logo data.**
- **The color of logo data may look different between the machine control panel and some PC screens. After registering logo data, restart the machine and check the color of the logo data on the BootUp screen.**

* To delete registered data, touch [Delete] and check result “OK” is displayed.

12.9.21 Install Data

A. Use

- To install movie help data or OCR dictionary data into HDD.
- To use when the logical format of the hard disk is performed.
- To install each data into the machine HDD via USB memory device.

B. Procedure

NOTE

- **To use OCR function, the optional i-Option LK-105 must be activated.**

1. Save data (*.tar) into the root directory of a USB memory device.
2. Connect the USB memory device to the machine USB port.
3. Select the key as follows.
   [System 2] → [▶] → [Install Data].
4. Touch [Movie Data] or [OCR Dictionary].
   You can select the above two types of data at a time and install them.
5. Touch [Set].
6. Press the Start key to install the data.
7. Check result “OK” is displayed and touch [END].

NOTE

- **If data is already installed, it is necessary to delete old data before installing new one.**

* To delete registered data, select the data to be deleted and touch [Delete]. Check result “OK” is displayed.

12.9.22 Bluetooth Settings

A. Use

- To set whether to enable or disable the Bluetooth function.
- Use this setting upon set-up of the optional local interface kit EK-605.

B. Procedure

- The default setting is Invalid.

Effective	“Invalid”

12.9.23 Auto Drum Dry

A. Use

- To set whether to enable or disable auto drum dry that makes the PC motor rotate for a specified period of time when the machine is turned ON after it has not been used for long hours.
- Use this function if the problem of uneven density occurs with the machine that has not been used for long hours.
  Yes : Under the condition where 6 hours or more has passed after the PC motor stopped rotating, when the main power switch/sub power switch are turned ON or when the machine completes warm-up in recovering from the low power mode/ sleep mode, drum dry is performed as initial operation.
  No : Auto drum dry is not performed.

B. Procedure

- The default setting is No.

Yes	“No”

12.10 Counter

- The counter displays the counts of various counters to allow the technical representative to check or set as necessary.

12.10.1 Common procedure

1. Touch [Counter] to show the counter menu.
2. Select the specific counter to be displayed.
3. To clear the counts of two or more counters within a group or across different groups at once, touch [Counter Reset], select the specific counters to be cleared, and touch [END]. Two or more counters can be selected.
   (However, the [Service Call], [Service Total], and [JAM] counters cannot be selected.)

12.10.2 Life

A. Use

- To check the number of hours or times each of the different maintenance parts has been used.
- To clear the count of each counter.
- To check how many times maintenance parts have been used.
- When each of the maintenance parts is replaced.

B. Procedure

(1) Counter clear

- To clear the count of a counter, select the specific part and press the Clear key.
- If a counter is cleared mistakenly, press the Interrupt key, which will undo the clearing operation.
- For the count method of each counter, see the table “Count method of each life counter.”

<Count method of each life counter>

Counter item	Counting method
Fusing Unit Rotation Time	• Counts how many hours the fusing roller (transport motor) has turned.
Transfer Roller Unit	• Counts how many sheets of paper have been printed. The counter increases by 1 for paper of 216 mm or less in the sub scan direction and increases by 2 for paper longer than 216 mm in the sub scan direction.
Ozone Filter	• Counts how many sheets of paper have been printed. The counter increases by 1 for paper of 216 mm or less in the sub scan direction and increases by 2 for paper longer than 216 mm in the sub scan direction.
Paper Dust Remover	• Counts how many hours the PC motor has turned.
1st.	• Number of sheets of paper fed from tray 1
2nd.	• Number of sheets of paper fed from tray 2
3rd.	• Number of sheets of paper fed from tray 3
4th.	• Number of sheets of paper fed from tray 4
Manual Tray	• Number of sheets of paper fed from the bypass
Drum Unit Rotation Time	• Counts how many hours PC drum has turned.
Developing Unit Rotation Time	• Counts how many hours the developing roller (PC motor) has turned. When this counter is cleared, “Developer Replace Count” and “Developer Use Time” will be cleared at a time automatically.

Counter item	Counting method
Developer Replace Count	• Counts how many times developers are replaced (how many times the Developer Use Time counter is reset).
Developer Use Time	• Counts how many hours the PC motor has turned.
LCT Parts	• Number of sheets of paper fed from the LCT
ADF Feed	• Number of sheets of original fed through the take-up section of the ADF
ADF Reverse	• Number of sheets of original fed through the turnover unit of the ADF
Sorter/Finisher	• Number of sheets of paper fed out of the sorter/finisher

12.10.3 Service Call Counter

A. Use

- To count and display how many times trouble has been detected on a trouble type basis.
- Use this feature to check how many times trouble has occurred.

NOTE

- **In the service call counter list, “Reboot” shows how many times abort code (C-FXXX) has occurred.**

12.10.4 Section Service Call

A. Use

- To count and display how many times trouble has been detected during a certain period, i.e. an interval between service visits, on a trouble type basis.
- Use this feature to check how many times trouble has occurred in a certain period, i.e. an interval between service visits.
- By clearing the counter at the time of visit to your customer, i.e. service visit, you can check how many times trouble has occurred since the previous visit.
  To reset the counter, use [Counter Reset].

NOTE

- **In the zone service call list, “Reboot” shows how many times abort code (C-FXXX) has occurred.**

12.10.5 Warning

A. Use

- To count and display how many times warning code has been detected on a warning code type basis.
- To check the number of warning conditions detected according to the warming type

B. Procedure

- To clear the count of a counter, select the specific part and press the Clear key.
- If a counter is cleared mistakenly, press the Interrupt key, which will undo the clearing operation.
- When a warning condition occurs, an oil mark appears at the lower left corner of the basic screen.
- Touching the oil mark will display the warning code screen.

12.10.6 Maintenance

A. Use

- To set a count value for maintenance of any given part.
- When any given part is replaced.

B. Procedure

Maint.-Set

- Enter the maintenance counter value from the 10-key pad.

Maint.-Count

- The number of sheets that have been ejected is counted up. (1 sided: 1 count, 2 sided: 2 count)
- Pressing the Clear key will clear the count.
- If the count is cleared mistakenly, press the Interrupt key, which will undo the clearing operation.

12.10.7 Service Total

A. Total

(1) Use

- To display the count value for the service total counter.
- Use to check the total No. of printed pages including the ones printed by the Service Mode.

(2) Procedure

Service Total : No. of pages printed by user mode and Service Mode.
Service Total (Duplex) : No. of pages printed by user mode and Service Mode in duplex.

B. Paper Size 1/2

(1) Use

- To display the count value for service total counter of each paper size.
- To check the total number of printed pages including the one at Service Mode according to each paper size.
- The count of Paper Size 1 and Paper Size 2 that contain the following paper sizes is provided respectively.

  Paper Size 1: A3, A4, A4S, A5, A6, B4, B5, B5S, B6, Post., 12 x 18, 11 x 17, $8^1/_2$ x 14, $8^1/_2$ x 11, $8^1/_2$ x 11S, $7^1/_4$ x $10^1/_2$, $5^1/_2$ x $8^1/_2$, 4 x 6, Foolscap
  Paper Size 1: 8K, 16K, Others

12.10.8 Counter of Each Mode

A. Use

- To display the printed pages in the following specified modes; copy, printer, scanner, and fax. It also displays the count value of using the specified mode.
- Use to check the printed pages in the following specified modes; copy, printer, scanner, and fax, as well as No. of times each mode was used, in order to know the using condition.

Copy/printer/scanner counter	: Displays individual counts in copy, printer, and scan mode.
Fax-related counter	: Displays individual counts in fax mode
Counter by finishing option	: Displays individual counts on a finishing option basis.
PJ counter	: Jobs that the machine has processed are divided according to the number of pages per job: 1P/J, 2P/J, ... 10P/J, or 11P/J and more. The counter is used to understand how the machine has been used in the field.

12.10.9 Service Call History (Data)

A. Use

- To display the trouble history in chronological order.
- Use to check the trouble history in chronological order.

12.10.10 ADF Paper Pages

A. Use

- To display the No. of pages fed to the automatic document feeder.
- Use to check the No. of pages fed to the automatic document feeder.

12.10.11 Paper Jam History

A. Use

- To display the jam history in chronological order.
- Use to check the jam history in chronological order.

NOTE

- **[Code] displayed on the screen of JAM history indicates JAM code. For details of JAM code, see “Trouble shooting.”**
  See P.569

12.10.12 Fax Connection Error

A. Use

- To display the No. of fax transmission errors occurred.
- Use to check the No. of fax transmission errors occurred.

12.10.13 ADF Scan Glass Contamin. Counter

A. Use

- To display the average number of detected stain on the ADF original glass at the pre-detection.
- Used for checking the number of detected stain on the ADF original glass.

Pre-detect Large Size	: Large-sized detected stain divided by the number of times pre-detection is practiced (average number of detected lines) will be displayed.
Pre-detect Small Size	: Small-sized detected stain divided by the number of times pre-detection is practiced (average number of detected lines) will be displayed.
Cleaning Brush Rotation Count	: Total rotation count is displayed by counting 1 per one rotation of cleaning brush.

B. Procedure

- To clear each counter value, select the items to be cleared, and press the Clear key. (When selecting [Pre-detect Large Size] or [Pre-detect Small Size] is selected, both values will be cleared.)
- If the count is cleared mistakenly, press the Interrupt key, which will undo the clearing operation.

12.10.14 Jam

A. Use

- To count and display how many times jam has been detected on a jam location basis.

12.10.15 Section JAM

- To count and display how many times jam has been detected in a certain period, i.e. an interval between service visits, on a jam location basis.
- Use this feature to check how many times jam has occurred in a certain period, i.e. an interval between service visits.
- By clearing the jam counter at the time of visit to your customer site, i.e. service visit, you can check how many times jam has occurred since the previous visit.
  To reset the counter, use [Counter Clear].

12.11 List Output

12.11.1 Batch List CSV Output

A. Use

- To save various lists data into a USB memory device all together with the CSV format.
- Compared to output to paper, outputting various lists data to the USB memory device can save time, paper, and toner.
  With the output data, analyzing the machine statistically becomes easier.
- Lists data to be output are as follows:

Target list	Data symbol
Machine Management List	S1
Adjustments List	S2
Parameter List	S3
Service Parameter	S4
Protocol Trace List	S5
Fax Setting List	S6
Management List	A1
Paper Size/Type Counter	A2
Configuration Page	U1
PCL Font List	U2
PS Font List	U3
Meter Count	C1

B. Procedure

1. Call the Service Mode to the screen.
2. Touch [List Output].
3. Insert the USB memory device to the USB port (for user).
4. Touch [USB save] displayed in the Batch List CSV Output.
   Then, List data are transferred to the USB memory device.
5. Confirm that “OK” is displayed as the result of data saving.

<File names of lists data>

- Each list data has its file name in accordance with the following file name rule.
  [2-digit data symbol that corresponds to each list (see the above table)] + [_(underscore)] + [13-digit serial number] + [6-digit date (year, month, and day)] + [2-digit hour] + [2-digit minute].csv

12.11.2 Machine Management List

A. Use

- To produce an output of a list of setting values, adjustment values, total counter values, and others.
- At the end of setup or when a malfunction occurs.

B. Procedure

- Load the A4S plain paper to a paper source.
- Press the Start key, which will let the machine produce the list.
- The time-of-day and date will also be printed.

12.11.3 Adjustment List

A. Use

- To output the adjustment list for machine adjustment, process adjustment, etc. in Service Mode.
- At the end of setup or when a malfunction occurs.

B. Procedure

- Load the A4S plain paper to a paper source.
- Press the Start key, which will let the machine produce the list.
- The time-of-day and date will also be printed.

12.11.4 Parameter List

A. Use

- Output a nonvolatile parameter list.

B. Procedure

- Load the A4S plain paper to a paper source.
- Press the Start key, which will let the machine produce the list.
- The time-of-day and date will also be printed.

Parameter
List

P 1
13/04/2010 21:02
Serial No. 1
TC: 0

FAX_JOB.data

No.	BIT	HEX	No.	BIT	HEX	No.	BIT	HEX	No.	BIT	HEX
0B0000 =	00000011	(03)	0B0001 =	00000011	(03)	0B0002 =	00000011	(03)	0B0003 =	00001000	(08)
0B0004 =	00000101	(05)	0B0005 =	00000000	(00)	0B0006 =	00000011	(03)	0B0007 =	11010100	(D4)
0B0008 =	00000000	(00)	0B0009 =	00001111	(0F)	0B000A =	01011010	(5A)	0B000B =	01011101	(5D)
0B000C =	00000000	(00)	0B000D =	01011101	(5D)	0B000E =	01100000	(60)	0B000F =	00000000	(00)
⋮			⋮			⋮			⋮		
0B0080 =	11111111	(FF)	0B0081 =	00000000	(00)	0B0082 =	00000000	(00)	0B0083 =	00000010	(02)

FAX_GFP.data

No.	BIT	HEX	No.	BIT	HEX	No.	BIT	HEX	No.	BIT	HEX
0E0000 =	00000001	(01)	0E0001 =	00010000	(10)	0E0002 =	01000000	(40)	0E0003 =	10000000	(80)
0E0004 =	00000101	(05)	0E0005 =	00001010	(0A)	0E0006 =	00000011	(03)	0E0007 =	00000110	(06)
0E0008 =	00001001	(09)	0E0009 =	00001100	(0C)	0E000A =	00000110	(06)	0E000B =	00000000	(00)
0E000C =	11100000	(E0)	0E000D =	00000000	(00)	0E000E =	00000000	(00)	0E000F =	00001000	(08)
⋮			⋮			⋮			⋮		
0E02AC =	00000000	(00)	0E02AD =	00000000	(00)	0E02AE =	00000000	(00)	0E02AF =	00000000	(00)

FAX_GSW.data

No.	BIT	HEX	No.	BIT	HEX	No.	BIT	HEX	No.	BIT	HEX
0F0000 =	10101010	(AA)	0F0001 =	00000001	(01)	0F0002 =	10111011	(BB)	0F0003 =	00000001	(01)
0F0004 =	00011111	(1F)	0F0005 =	00001110	(0E)	0F0006 =	01000110	(46)	0F0007 =	00011011	(1B)
0F0008 =	11111100	(FC)	0F0009 =	11111111	(FF)	0F000A =	00111111	(3F)	0F000B =	00000101	(05)
0F000C =	00000101	(05)	0F000D =	00000101	(05)	0F000E =	00000101	(05)	0F000F =	00000001	(01)
⋮			⋮			⋮			⋮		
0F003C =	00000000	(00)	0F003D =	00000000	(00)	0F003E =	00000000	(00)	0F003F =	00000000	(00)

FAX_GHP.data

No.	BIT	HEX	No.	BIT	HEX	No.	BIT	HEX	No.	BIT	HEX
100000 =	00100010	(22)	100001 =	00000001	(01)	100002 =	00010001	(11)	100003 =	00000001	(01)
100004 =	00011111	(1F)	100005 =	00001110	(0E)	100006 =	01000110	(46)	100007 =	00011011	(1B)
100008 =	11110000	(F0)	100009 =	11111111	(FF)	10000A =	00111111	(3F)	10000B =	00000101	(05)
10000C =	00000101	(05)	10000D =	00000101	(05)	10000E =	00000101	(05)	10000F =	00000001	(01)
⋮			⋮			⋮			⋮		
10003C =	00000000	(00)	10003D =	00000000	(00)	10003E =	00000000	(00)	10003F =	00000000	(00)

FAX_LIST.data

No.	BIT	HEX	No.	BIT	HEX	No.	BIT	HEX	No.	BIT	HEX
120000 =	00000000	(00)	120001 =	01101100	(6C)	120002 =	00000100	(04)	120003 =	00110000	(30)
120004 =	00111001	(39)	120005 =	00110000	(30)	120006 =	00110000	(30)	120007 =	00000000	(00)
120008 =	00000000	(00)	120009 =	00000000	(00)	12000A =	10100011	(A3)	12000B =	00001111	(0F)
12000C =	01100001	(61)	12000D =	00000000	(00)	12000E =	00000000	(00)	12000F =	00000000	(00)
⋮			⋮			⋮			⋮		
120040 =	00000000	(00)	120041 =	00000000	(00)						

FAX_PANEL.data

No.	BIT	HEX	No.	BIT	HEX	No.	BIT	HEX	No.	BIT	HEX
130000 =	00010001	(11)	130001 =	10000001	(81)	130002 =	00000100	(04)	130003 =	00000110	(06)
130004 =	00001001	(09)	130005 =	00000101	(05)	130006 =	00000001	(01)	130007 =	00001001	(09)
130008 =	00000011	(03)	130009 =	00000000	(00)	13000A =	00000010	(02)	13000B =	00010100	(14)
13000C =	00000000	(00)	13000D =	00000101	(05)	13000E =	00000000	(00)	13000F =	00000000	(00)
⋮			⋮			⋮			⋮		
1300B4 =	00000000	(00)	1300B5 =	00000000	(00)	1300B6 =	00000000	(00)	1300B7 =	00000000	(00)

A22MF3E010DA

12.11.5 Service Parameter

A. Use

- Output a FAX Service Mode set value list.

B. Procedure

- Load the A4S plain paper to a paper source.
- Press the Start key, which will let the machine produce the list.
- The time-of-day and date will also be printed.

Service Parameter List

P 1
13/04/2010 21:06
Line1 Serial No. 1
TC: 0

Modem/NCU

Item	Setting	Item	Setting
V34 TX Max Bit Rate	33600 bps	V34 RX Max Bit Rate	33600 bps
V34 Max SYMB Speed	3429 SYMB	V34 Control CH Speed	1200 bps
V34 SYMB Selection Standard	0 dB	V34 SYMB Selection Standard	0 dB
V34 Main CH Speed Selection Standard	0 dB	Under V17 Max. RX Speed	V17 - 14400
Under V17 Max. TX Speed	V17 - 14400	TONE/Procedure Signal TxATT	-8 dBm
PIX TxATT	-8 dBm	CO/SED ON Level	-48 dBm
CED/ANSam TxATT	-8 dBm	DTMF TX Level Difference	2.0 dB
DTMF TxATT	-6 dBm	RX Cable EQL	0 dB
TX Cable EQL	0 dB		

Communication

Item	Setting	Item	Setting
V8/V34 Protocol	ON	V17 EP TONE	ON
V29 EP TONE	OFF	T1 TIMER	35 s
Foreign Communication Function	ON	V34 Int'l Comm. Speed	28800 bps
V17 Int'l Comm. Speed	7200 bps	V29 Int'l Comm. Speed	4800 bps
No. of DIS Waiting Times at Foreign Communication	1	ECM Function	ON
Frame Size at ECM TX	256	Cording Ability	MH/MR/MMR/JBIG
ANSam Send Time	4.0 s	CED-DIS DELAY TIMER	80 ms
DCS-TCF DELAY	80 ms	PIX-PMC DELAY TIMER	80 ms
EOL-EOL TIMER	13.0 s	EOM-PIXWAIT	5.5 s
CFR-PIX WAIT TIMER	6.0 s	JM WAIT TIMER	9.0 s
V17 Selection Mode "-"	OFF		

Network

Item	Setting	Item	Setting
Receive Signal Detection Mode	No. of Times	Response Waiting Time	55 s
Pause Time	1 s	Dial Tone Detection	OFF
DC-LOOP Check	OFF	1300HZ Detection	OFF
No. of Times of Busy Tone Detection	0	Pseudo-RBT Format	GB
Pseudo-RBT TX Level	-8 dBm	Dial Tone Detection	ON
min. RING OFF Time	0 ms		

Service Parameter List

P 2
13/04/2010 21:06
Line1 Serial No. 1
TC: 0

List Output

Item	Setting	Item	Setting
Protocol Trace Auto Output	OFF	TX Result Report	With image
Journal Diagnosis Code Addition	OFF		

System

Item	Setting	Item	Setting
Frame Erasure HP	10 mm		
Auto Rotation Send(A4T)	ON	Auto Rotation Send(LT)	ON
Number of Redials(Error Page)	3	Error Page Resending	Error Page
Fax Board Watchdog	ON		
Fax BOOT Rewrite on ISW	OFF	Error Code Display Time	20 s
Closed area Rx	ON	Relay	ON
Remote Rx	OFF	Reject Calls	OFF
Compulsory Memory Rx	ON	Dial In	OFF
		Number/Name Disp.	OFF
		Re-Transmission	ON

A22MF3E011DA

Service Parameter List

P 3
13/04/2010 21:06

Line2 Serial No. 1
TC: 0

Modem/NCU

Item	Setting	Item	Setting
V34 TX Max Bit Rate	33600 bps	V34 RX Max Bit Rate	33600 bps
V34 Max SYMB Speed	3429 SYMB	V34 Control CH Speed	1200 bps
V34 SYMB Selection Standard	0 dB	V34 SYMB Selection Standard	0 dB
V34 Main CH Speed Selection Standard	0 dB	Under V17 Max. RX Speed	V17 - 14400
Under V17 Max. TX Speed	V17 - 14400	TONE/Procedure Signal TxATT	-8 dBm
PIX TxATT	-8 dBm	CD/SED ON Level	-48 dBm
CED/ANSam TxATT	-8 dBm	Line Level Difference	2.0 dB
DTMF TxATT	-6 dBm	RX Cable EQL	0 dB
TX Cable EQL	0 dB		

Communication

Item	Setting	Item	Setting
V8/V34 Protocol	ON	V34 Int'l Comm. Speed	28800 bps
Foreign Communication Function	ON	V29 Int'l Comm. Speed	4800 bps
V17 Int'l Comm. Speed	7200 bps	ECM Function	ON
RC-PC-RTS Maintain Times	1	Cording Ability	MH/MR/MMR/JBIG
Frame Size at ECM TX	256		

Network

Item	Setting	Item	Setting
Receive Signal Detection Mode	No of Times		
Pause Time	1.5	Response Wait+On_Line Detection	55 s
DC-LOOP Check	OFF		OFF
No. of Times of Busy Tone Detection	0	1300Hz Detection	OFF
min. RING OFF Time	0 ms	Dial Tone Detection	ON

A22MF3E012DA

12.11.6 Protocol Trace

A. Use

- Protocol Trace List (Last)
  The facsimile protocol of the communication which was executed previously is output.
- Protocol Trace List (Error)
  Output the facsimile procedure for the last error communication.

B. Procedure

- Load the A4S plain paper to a paper source.
- Press the Start key, which will let the machine produce the list.
- The time-of-day and date will also be printed.

```
                                    Protocol Trace List (Current)                                   P  1
                                                                                        13/04/2010 21:07
                                                                                 Serial No.  1
                                                                                        TC:         0
Line1
MFP controller       ROM Ver:A1UD0Y0-0100-G00-11
FAX board controller ROM Ver:15LA-0040-G01-10-000

          R:ANSam
          R:CSI              FF  03  40  20  20  20  20  20  20  20  20  20  20  20  20  20  20     ..@
                             20  20  20  20  20  20  20
          R:DIS              FF  13  80  20  EE  AA  C4  80  DD  83  80  80  60                     ... ........
          T:TSI              FF  03  43  20  20  20  20  20  20  20  20  20  20  20  20  20  20     ..C
                             20  20  20  20  20  20  20
          T:DCS              FF  13  83  DD  42  F8  84  80  80  80  80  80  20                     ....B.......
                             HR=R8 VR=7.7 MST=0 CUD=JBIG ECM=ON(256) WD=A4
          R:CFR              FF  13  84                                                             ...
          T:PIX              V34-33600bps SYM=3428
          T:PPS-EOP          FF  13  BF  2F  00  00  AE                                             .../...
          R:MCF              FF  13  8C                                                             ...
          T:DCN              FF  13  FB                                                             ...
```

```
                                    Protocol Trace List (Error)                                     P  1
                                                                                        13/04/2010 21:08
                                                                                 Serial No.  1
                                                                                        TC:         0
Line1
MFP controller       ROM Ver:A1UD0Y0-0100-G00-11
FAX board controller ROM Ver:15LA-0040-G01-10-000

          R:ANSam
          R:CSI              FF  03  40  20  20  20  20  20  20  20  20  20  20  20  20  20  20     ..@
                             20  20  20  20  20  20  20
          R:DIS              FF  13  80  20  EE  8A  C4  80  DD  83  80  80  60                     ... ........
          T:TSI              FF  03  43  20  20  20  20  20  20  20  20  20  20  20  20  20  20     ..C
                             20  20  20  20  20  20  20
          T:DCS              FF  13  83  DD  42  F8  84  80  80  80  80  80  20                     ....B.......
                             HR=R8 VR=7.7 MST=0 CUD=JBIG ECM=ON(256) WD=A4
          R:CFR              FF  13  84                                                             ...
```

A22MF3E013DA

12.11.7 Fax Setting List

A. Use

- Output a FAX user set value list. (Items vary depending on models.)

B. Procedure

- Load the A4S plain paper to a paper source.
- Press the Start key, which will let the machine produce the list.
- The time-of-day and date will also be printed.

Fax Setting List

P 1
13/04/2010 21:02
Serial No. 1
TC: 38

Panel Initial Setting

Item	Setting	Item	Setting
Default Tab	Address Book	Address Book Index Default	Main
Time until Auto reset	1 min.	RX Display	No
Panel Initial Setting	ON	TX Display	No

Header Information

Item	Setting
Line 1 Sender Name	test-fax01
Line 2 Sender Name	test-fax02
Fax No.	

Header/Footer Position

Item	Setting	Item	Setting
Header Position	Outside Body Text	Destination Print	ON
Footer Position	OFF		

Line Parameter Setting

Item	Setting	Item	Setting
Dialing Method	PB	Receive Mode	Auto RX
Number of RX Call Rings	2 x	Number of Redials	1 x
Redial Interval	3 min.	TEL/FAX Auto Switch	OFF
External Phone Disconnection	OFF	External Phone Voice Mail Setting	OFF
Line Monitor Sound	OFF	Line Monitor Sound Volume (Dialing)	10
Line Monitor Sound Volume (Receive)	20		

TX/RX Settings

Item	Setting	Item	Setting
Incorrect User Box Entry Setting Selection	Print	Print/Fax Guide Setting	Batch Print
Enlarging Power Save Mode (FAX)	Auto Select Normal	Inch Paper Priority	ON
Print Paper Size	8.5x11	Auto Reduction	96
Print Separate	OFF	Auto Rotation	Auto
Fax Header		Tray Selection	
File After Polling TX	Delete	Fax RX Print	OFF
RX from Rejected	Disconnect	Duplex Print (RX)	1
Fax Manual Receiving	OFF	No. of Sets (RX)	ON
Line Setup		Individual Sender Line Setup	

Report Settings

Item	Setting	Item	Setting
Activity Report	Every 100 Comm.		
Remote Scanner Report Setup	Normal Printing	TX Result Report	ON
Sequential TX Report	ON	Timer Reservation TX Report	ON
Confidential RX Report	ON	Bulletin TX Report	ON
TX Result Report Check	OFF	Broadcast Result Report	All Dest.
Relay TX Result Report	ON	Relay Request Report	ON
PC-Fax TX Error Report	OFF		
Network Fax RX Error Report	ON	Message Body	ON
MDN Message	ON	DSN Message	OFF

PBX Connection Setting

Item	Setting
PBX CN Mode Set	No

Fax Print Quality Settings

Item	Setting
Low Resolution	Prioritize Quality
High Resolution	Prioritize Speed

A22MF3E014DA

Fax Setting List

P 2
13/04/2010 21:02
Serial No. 1
TC: 38

Function ON/OFF Setting

Item	Setting	Item	Setting
Number Display Function	OFF	F-Code TX	ON
Destination Check Display Function	OFF	Relay RX	ON
Relay Print	OFF	Confirm Address (TX)	OFF
Confirm Address (Reg.)	OFF		

Forward TX Setting

Item	Setting
Forward TX Setting	No
Forward condition	Forward & Print (TX FX Fail)
Forward Dest.	unregistration

Dial-In Settings

Item	Setting	Item	Setting
Dial-In Settings	No	Fax Number	unregistration
Dial Number	unregistration	PC-Fax Number	unregistration

Remote RX

Item	Setting
Remote RX	No

Memory RX

Item	Setting
Memory RX	No

Closed Network RX

Item	Setting
Closed Network RX	No

PC-Fax RX Setting

Item	Setting	Item	Setting
PC-Fax RX Setting	Restrict	Receiving User Box Destination	xxx
Print After Receive	xxx	Password Check	xxx

Incomplete TX Hold

Item	Setting	Item	Setting
Incomplete TX Hold	Yes	Incomplete TX Hold Time	12 Hours

TSI User Box Setting

Item	Setting
Action when TSI User Box is not set.	Automatically Print

Fax Setting List

P 3
13/04/2010 21:02
Serial No. 1
TC: 38

Multi Line Settings

Item	Setting	Item	Setting
Dialing Method	PB	Number of RX Call Bytes	2 x
Line Monitor Sound	OFF	PC-Fax Selecting	No Selection
Number Display Function	OFF	Multi Line Settings	TX and RX

Item	Setting
Sender Fax No.	

A22MF3E015DA

Fax Setting List

P 4
13/04/2010 21:02
Serial No. 1
TC: 38

Internet Fax RX Ability Settings

Item	Setting
Compression Type	MH/MR/MMR
Paper Size	A4/B4/A3
Resolution	Standard/Fine/Super Fine

I-Fax Advanced Settings

Item	Setting	Item	Setting
MDN Request	Yes	DSN Request	Do Not Send
MDN Response	Yes	MDN/DSN Response Watch Time	24

IP Address Fax Operation Settings

Item	Setting
Operating Mode	Mode 1

Title List

No.	Subject
01	doc
02	data_PHOTO

Text List

No.	Body
01	data sending

Fax Setting List

P 5
13/04/2010 21:02
Serial No. 1
TC: 38

Relay List

No.	Group No.	Password
000000004	002	123

A22MF3E016DA

Fax Setting List

P 6
13/04/2010 21:02
Serial No. 1
TC: 38

Fax Line 1
Sender (TSI) RX User Box

No.	Sender (TSI)	Forwarding Destination
001	123	B0000000001
002	124	B0000000001

Note: E:E-Mail, F:FTP, S:SMB, G:Group, B:Box, W:WebDav

A22MF3E017DA

Fax Setting List

P 7
13/04/2010 21:02
Serial No. 1
TC: 38

Confidential/Bulletin Lists

No.	Name	Password	Type
000000005	bbox1		Bulletin
000000006	box3	1234	User Box No.

A22MF3E018DA

12.11.8 Fax Analysis List

A. Use

- Following list is output in the Fax Analysis List.
  - Parameter List
  - Machine Management List
  - Protocol Trace List (Error)
  - Fax Setting List
  - Communication Management List
  - Service Parameter List

B. Procedure

- Load the A4S plain paper to a paper source.
- Press the Start key, which will let the machine produce the list.
- The time-of-day and date will also be printed.

12.11.9 SIP Protocol Trace

- Not used.

12.12 State Confirmation

12.12.1 Sensor Check

A. Use

- To display the states of the input ports of sensors and switches when the machine remains stationary.
- Used for troubleshooting when a malfunction or a misfeed occurs.

B. Procedure

- The operation of each of the switches and sensors can be checked on a real-time basis.
- It can be checked as long as the 5-V power line remains intact even when a door is open.

(1) Electrical components check procedure through input data check

- When a paper misfeed occurs in the paper feed section of the machine, the tray 2 paper feed sensor is considered to be responsible for it.

1. Remove the sheet of paper misfed.
2. From the sensor check list that follows, check the panel display of the tray 2 paper feed sensor. For the tray 2 paper feed sensor, you check the data of “Paper feed” of “Tray 2.”
3. Call the Service Mode to the screen.
4. Select [State Confirmation] → [Sensor Check] and then select the screen that contains “Paper feed” under “Tray 2.” For “Paper feed” under “Tray 2,” select “1” on the left-hand side of the screen.
5. Check that the data for “Paper feed” under “Tray 2” is “0” (sensor blocked).
6. Move the actuator to unblock the tray 2 paper feed sensor.
7. Check that the data for “Paper feed” under “Tray 2” changes from “0” to “1” on the screen.
8. If the input data is “0,” change the sensor.

12.12.2 Sensor check screens

- These are only typical screens which may be different from what are shown on each individual machine.

A. Sensor monitor

(1) Sensor monitor 1,2

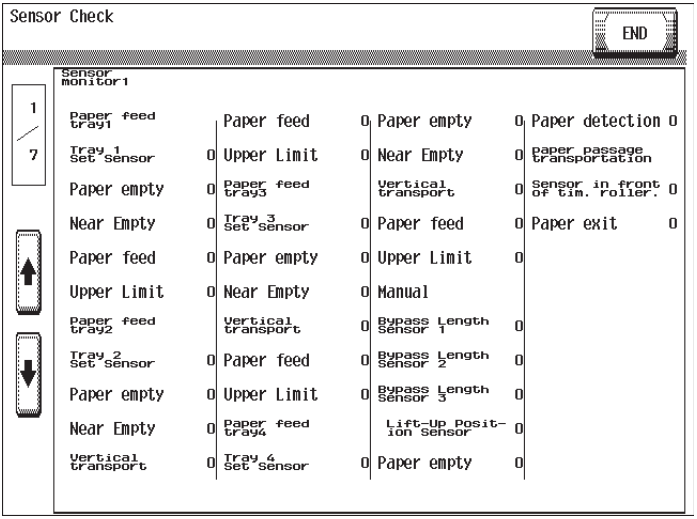

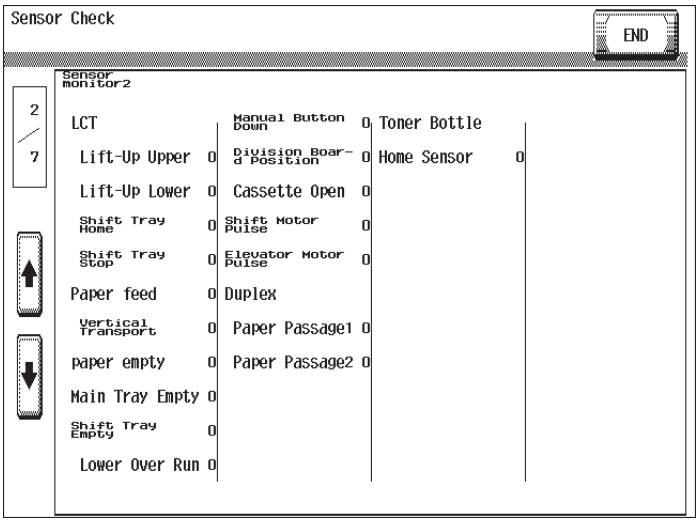

A1UDF3E020DA

(2) Sensor monitor 3,4

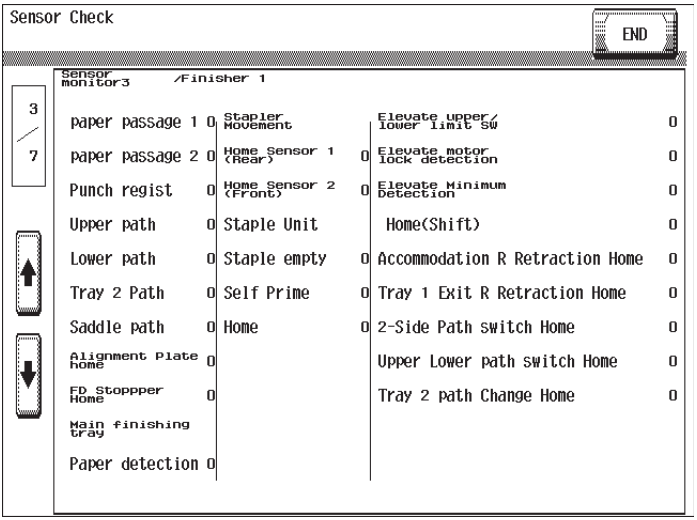

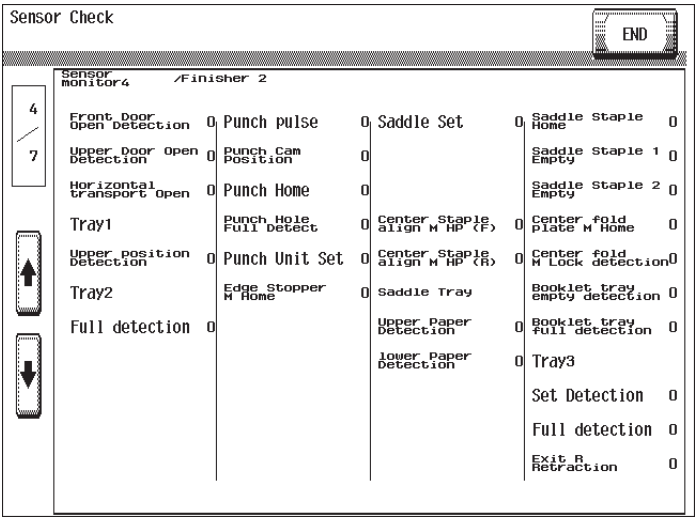

A1UDF3E021DA

(3) Sensor monitor 5,6

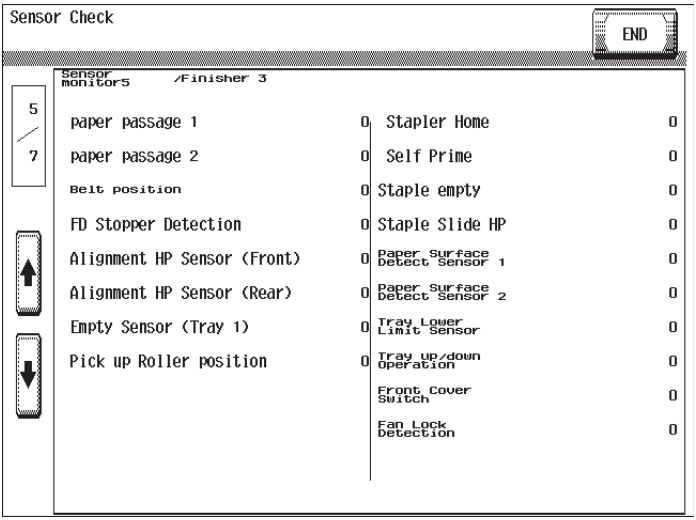

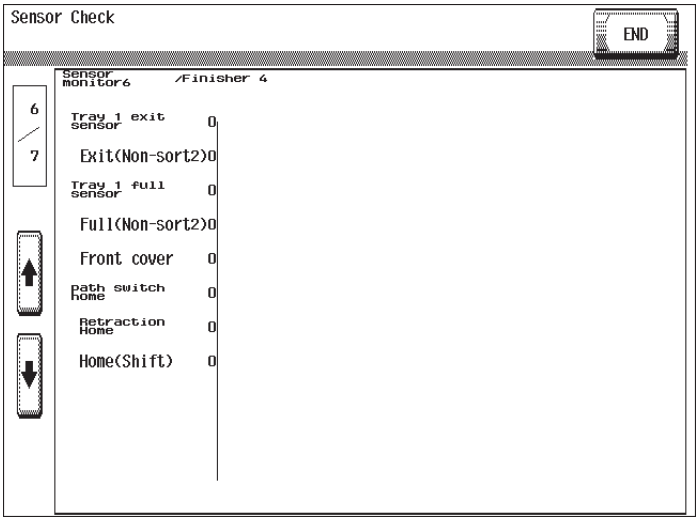

A1UDF3E022DA

(4) Sensor monitor 7

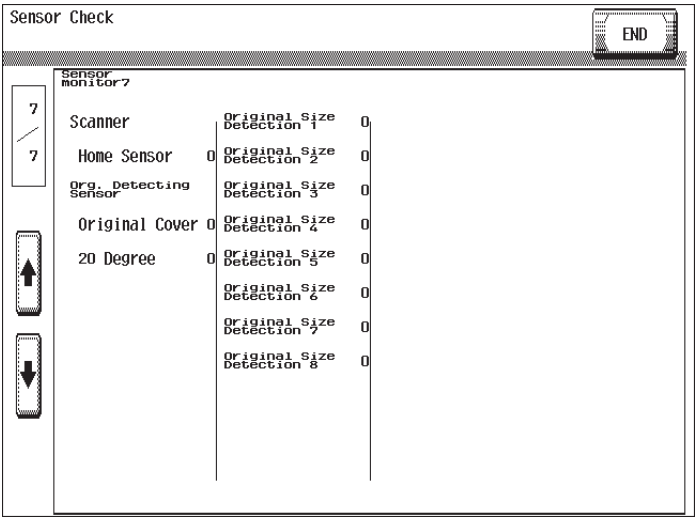

A1UDF3E023DA

12.12.3 Sensor check list

A. Sensor monitor

(1) Sensor monitor 1 (Main body, PC-109/208)

Symbol	Panel display	Part/signal name	Operation characteristics/panel display	
			1	0
	Paper feed tray 1			
PS13	Tray 1 Set Sensor	Tray 1 detection sensor	In position	Out of position
PS15	Paper empty	Tray 1 paper empty sensor	Paper not present	Paper present
PS14	Near Empty	Tray 1 near empty sensor	Near empty	Not near empty
PS11	Paper feed	Tray 1 paper feed sensor (bizhub 423 only)	Paper present	Paper not present
PS12	Upper Limit	Tray 1 upper limit sensor	At raised position	Not at raised position
	Paper feed tray 2			
PS23	Tray 2 Set Sensor	Tray 2 detection sensor	In position	Out of position
PS25	Paper empty	Tray 2 paper empty sensor	Paper not present	Paper present
PS24	Near Empty	Tray 2 near empty sensor	Near empty	Not near empty
PS28	Vertical transport	Tray 2 vertical transport sensor	Paper present	Paper not present
PS21	Paper feed	Tray 2 paper feed sensor	Paper present	Paper not present
PS22	Upper Limit	Tray 2 upper limit sensor	At raised position	Not at raised position
	Paper feed tray 3			
PS31	Tray 3 Set Sensor	Tray 3 detection sensor	Set	Unset
PS34	Paper empty	Tray 3 paper empty sensor	Paper not present	Paper present
PS32	Near Empty	Tray 3 near empty sensor	Near empty	Not near empty
PS36	Vertical transport	Tray 3 vertical transport sensor	Paper present	Paper not present
PS35	Paper feed	Tray 3 paper feed sensor	Paper present	Paper not present
PS33	Upper Limit	Tray 3 upper limit sensor	At raised position	Not at raised position
	Paper feed tray 4			
PS41	Tray 4 Set Sensor	Tray 4 detection sensor	Set	Unset

Symbol	Panel display	Part/signal name	Operation characteristics/panel display	
			1	0
PS44	Paper empty	Tray 4 paper empty sensor	Paper not present	Paper present
PS42	Near Empty	Tray 4 near empty sensor	Near empty	Not near empty
PS46	Vertical transport	Tray 4 vertical transport sensor	Paper present	Paper not present
PS45	Paper feed	Tray 4 paper feed sensor	Paper present	Paper not present
PS43	Upper Limit	Tray 4 upper limit sensor	At raised position	Not at raised position
	Manual			
PS84	Bypass Length Sensor 1	Manual multi FD sensor /1	Paper present	Paper not present
PS85	Bypass Length Sensor 2	Manual multi FD sensor /2	Paper present	Paper not present
PS86	Bypass Length Sensor 3	Manual multi FD sensor /3	Paper present	Paper not present
PS83	Lift-Up Position Sensor	Manual lift-up position sensor	Paper feed available position	Standby position
PS82	Paper empty	Manual paper empty sensor	Paper not present	Paper present
PS81	Paper detection	Manual paper detection sensor	Paper present	Paper not present
	Paper passage transportation			
PS1	Sensor in front of tim. roller.	Registration sensor	Paper present	Paper not present
PS3	Paper exit	Paper exit sensor	Paper present	Paper not present

(2) Sensor monitor 2 (Main body, PC-409)

Symbol	Panel display	Part/signal name	Operation characteristics/panel display	
			1	0
	LCT			
PS54	Lift-Up Upper	Lift-up upper limit sensor	Raised Position	Not raised
PS5D	Lift-Up Lower	Lift-down lower limit sensor	Lowered Position	Not lowered
PS5C	Shift Tray Home	Shifter home position sensor	At home	Not at home
PS5B	Shift Tray Stop	Shifter stop position sensor	Return position	Not at return position
PS51	Paper feed	Paper feed sensor	Paper present	Paper not present
PS52	Vertical Transport	Vertical transport sensor	Paper present	Paper not present
PS53	Paper empty	Paper empty sensor	Paper not present	Paper present
MTPEB	Main Tray Empty	Main tray paper empty board	Paper not present	Paper present
PS59	Shift Tray Empty	Shift tray empty sensor	Paper not present	Paper present
PS57	Lower Over Run	Lift-down over run sensor	malfunction	operational
MDCB	Manual Button Down	Manual down control board	ON	OFF
PS5E	Division Board Position	Division board position sensor	At home	Not at home
PS56	Cassette Open	Tray detection sensor	Open	Closed
PS58	Shift Motor Pulse	Shift motor sensor	Blocked	Unblocked
PS5A	Elevator Motor Pulse	Elevator motor sensor	Blocked	Unblocked
	Duplex			
PS92	Duplex paper passage 1	Duplex unit upper transport sensor	Paper present	Paper not present
PS93	Duplex paper passage 2	Duplex unit lower transport sensor	Paper present	Paper not present
	Toner Bottle			
PS4	Home Sensor	Toner bottle home sensor	At home	Not at home

(3) Sensor monitor 3 (FS-527)

NOTE

- **"Tray 1" indicates the tray 2 (lower) and "Tray 2" is the tray 1 (upper) shown on the panel.**

Symbol	Panel display	Part/signal name	Operation characteristics/ panel display	
			1	0
	Finisher 1			
PS1	paper passage 1	Paper passage sensor/1	Paper present	Paper not present
PS2	paper passage 2	Paper passage sensor/2	Paper present	Paper not present
PS10	punch regist	Registration sensor	Paper present	Paper not present
PS8	Upper path	Upper path sensor	Paper present	Paper not present
PS9	Lower path	lower path sensor	Paper present	Paper not present
PS6	Tray 2 Path	Tray 1 path sensor	Paper present	Paper not present
PS11	Saddle path	Saddle path sensor	Paper present	Paper not present
PS17	Alignment Plate home	Alignment plate home sensor	At home	Not at home
PS20	FD Stopper Home	Leading edge stopper home sensor	At home	Not at home
	Main finishing tray			
PS16	Paper detection	Tray 2 paper detection sensor	Paper present	Paper not present
	Stapler Movement			
PS18	Home Sensor 1 (Rear)	Stapler home sensor/1	At home	Not at home
PS19	Home Sensor 2 (Front)	Stapler home sensor/2	At home	Not at home
	Staple Unit			
—	Staple empty	—	No staple	Staple
—	Self Prime	—	Staple	No staple
—	Home	—	At home	Not at home
SW2	Elevate upper/lower limit SW	Tray 2 upper position switch	At lower limit position	Not at lower limit position
SW3		Tray 2 lower position switch		
M15	Elevate motor lock detection	Elevate motor	Lock	Other than lock
PS21	Elevate Minimum Detection	Tray 2 lower position sensor	At lower limit position	Not at lower limit position
PS25	Home (Shift)	Tray 2 shift home sensor	Rear	Front
PS13	Accommodation R Retraction Home	Accommodation roller pressure sensor	No electricity restrictions	Electricity restrictions

Symbol	Panel display	Part/signal name	Operation characteristics/ panel display	
			1	0
PS12	Tray 1 Exit R Retraction Home	Exit roller pressure sensor	No electric-ity restric-tions	Electricity restrictions
PS3	2-Side Path switch Home	Duplex path switching sensor	Duplex	Not duplex
PS26	Upper Lower path switch Home	Upper lower path switching sensor	Upper path	Lower path
PS7	Tray 2 path Change Home	Tray 1 path switching home sensor	Tray 1	Upper path

(4) Sensor monitor 4 (FS-527/SD-509/PK-517/JS-603)

NOTE

- **"Tray 1" indicates the tray 2 (lower) and "Tray 2" is the tray 1 (upper) shown on the panel.**

Symbol	Panel display	Part/signal name	Operation characteristics/ panel display	
			1	0
	Finisher 2			
SW1	Front Door Open Detection	Front door switch	Closed	Open
PS14	Upper Door Open Detection	Upper door sensor	Closed	Open
PS5	Horizontal transport Open	Horizontal conveyance cover sensor	Closed	Open
	Tray 1			
PS24	Upper position Detection	Tray 2 upper position sensor	Top detected	Other than top detected
	Tray 2			
PS22	Full detection	Tray 1 full sensor	Full	Other than full
PS300	Punch pulse	Punch pulse sensor/1	ON	OFF
PS200	Punch Cam Position	Punch cam position sensor	At home	Not at home
PS100	Punch Home	Punch home sensor/1	At home	Not at home
PS30	Punch Hole Full Detect	Punch hole full sensor	Full	Other than full
—	Punch Unit Set	—	Set	Other than set
PS45	Edge Stopper M Home	Leading edge stopper home sensor	At home	Not at home
—	Saddle Set	—	Set	Other than set
PS42	Center Staple align M HP (F)	Center staple alignment home sensor/F	At home	Not at home
PS41	Center Staple align M HP (R)	Center staple alignment home sensor/R	At home	Not at home
	Saddle Tray			
PS43	Upper Paper Detection	Paper detection sensor/1	Staple	No staple

Symbol	Panel display	Part/signal name	Operation characteristics/ panel display	
			1	0
PS44	lower Paper Detection	Paper detection sensor/2	Staple	No staple
—	Saddle Staple Home	—	At home	Not at home
—	Saddle Staple 1 Empty	—	Staple	No staple
—	Saddle Staple 2 Empty	—	Staple	No staple
PS47	Center fold plate M Home	Center fold plate home sensor	At home	Not at home
M25	Center fold M Lock detection	Center fold roller motor	Lock	Other than lock
PS48	Booklet tray empty detection	Booklet tray near full sensor	Paper present	Paper not present
PS50	Booklet tray full detection	Booklet tray full sensor	Paper present	Paper not present
	Tray 3			
—	Set Detection	—	Set	Other than set
PS36	Full detection	Tray 3 full sensor	Full	Other than full
PS35	Exit R Retraction	Tray 3 exit roller retraction sensor	No electricity restrictions	Electricity restrictions

(5) Sensor monitor 5 (FS-529)

Symbol	Panel display	Part/signal name	Operation characteristics/ panel display	
			1	0
	Finisher 3			
PS1	paper passage 1	Paper passage sensor/1	Paper present	Paper not present
PS10	paper passage 2	Paper passage sensor/2	Paper present	Paper not present
PS13	Belt position	Belt position sensor	At home	Not at home
PS14	FD Stopper Detection	Leading edge stopper home sensor	ON	OFF
PS8	Alignment HP Sensor (Front)	Alignment plate home sensor/F	At home	Not at home
PS9	Alignment HP Sensor (Rear)	Alignment plate home sensor/R	At home	Not at home
PS7	Empty Sensor (Tray 1)	Paper empty sensor	Paper present	Paper not present
PS12	Pick up Roller position	Pick up roller position sensor	No electricity restrictions	Electricity restrictions
—	Stapler Home	—	At home	Not at home
—	Self Prime	—	Staple	No staple
—	Staple empty	—	No staple	Staple
PS11	Staple Slide HP	Stapler home sensor	At home	Not at home
PS2	Paper Surface Detect Sensor 1	Paper surface detect sensor/1	Blocked	Unblocked
PS3	Paper Surface Detect Sensor 2	Paper surface detect sensor/2	Blocked	Unblocked
PS6	Tray Lower Limit Sensor	Tray lower limit sensor	At lower limit position	Not at lower limit position
PS4	Tray up/down Operation	Tray up/down operation sensor	Blocked	Unblocked
SW1	Front Cover Switch	Front door switch	Closed	Open
FM1	Fan Lock Detection	Fan motor	Lock	Other than lock

(6) Sensor monitor 6 (JS-505)

Symbol	Panel display	Part/signal name	Operation characteristics/panel display	
			1	0
	Finisher 4			
PS1	Tray 1 exit sensor	Lower tray exit sensor	Paper present	Paper not present
PS2	Exit (Non-sort2)	Upper tray exit sensor	Paper present	Paper not present
T1FDT B/LED	Tray 1 full sensor	Lower tray paper full detect board/LED	Full	Other than full
T2FDT B/LED	Full (Non-sort2)	Upper tray paper full detect board/LED	Full	Other than full
PS3	Front cover	Front door sensor	Closed	Open
PS4	path switch home	Route change home sensor	At home	Not at home
PS5	Retraction Home	Pressure/retraction home sensor	At home	Not at home
PS6	Home (Shift)	Shift home sensor	At home	Not at home

(7) Sensor monitor 7

Symbol	Panel display	Part/signal name	Operation characteristics/panel display	
			1	0
	Scanner			
PS201	Home Sensor	Scanner home sensor	At home	Out of home
	Org. Detecting Sensor			
RS201	Original Cover	Original cover switch	Lowered	Raised
PS202	20 Degree	Angle sensor	Less than 20 degree *1	20 degree or more *1
PS204	Original Size Detection 1	Original size detection 1 sensor	Original loaded, not mounted	Original not loaded
PS205	Original Size Detection 2	Original size detection 2 sensor	Original loaded, not mounted	Original not loaded
—	Original Size Detection 3	Not used	—	—
—	Original Size Detection 4	Not used	—	—
—	Original Size Detection 5	Not used	—	—
—	Original Size Detection 6	Not used	—	—
—	Original Size Detection 7	Not used	—	—
—	Original Size Detection 8	Not used	—	—

12.12.4 Table Number

A. Use

- To display Vg/Vdc output value.
- Used for troubleshooting of image problems.
- Reference values: Vdc: around 400 V, Vg: around 500 V

B. Procedure

- If the value is high, correct so that the image density becomes low.
- If the value is low, correct so that the image density becomes high.

12.12.5 Level History1

A. Use

- To display TCR (T/C ratio), drum temperature and fusing temperature.
- Used for troubleshooting of image problems.

B. Procedure

- TCR-K : Shows the T/C output reading taken last.
- Fusing Temperature (Main) : Shows the last temperature detected by the heating roller thermistor (center).
- Fusing Temperature (Sub) : Shows the last temperature detected by the heating roller thermistor (edge).
- Drum Temperature : Shows the last temperature detected by the PC thermistor of the drum unit.

“Reading taken last” means

- Density of toner of the latest image
- When a test print is produced by pressing the Start key while level history 1 is being displayed.

12.12.6 Level History 2

A. Use

- To display the transfer output (ATVC) value.
- Used for troubleshooting of image problems.

B. Procedure

- ATVC : Shows the second image transfer ATVC adjustment value (300 to 5000 V).

12.12.7 Temp. & Humidity

A. Use

- To display the temperature and humidity of the machine.
- Used as reference information when a malfunction occurs.

B. Procedure

- Temp-Inside : 0 to 100 °C in 1 °C increments
- Humidity : 0 to 100 % in 1 % increments
- Absolute Humidity : 0 to 100 in 1 increments

12.12.8 CCD Check

A. Use

- To display the D/A value of CCD clamp/gain for R, G, and B.
- Used for troubleshooting for the CCD sensor.

B. Procedure

- Use the following guidelines on the correct range of values.

<CCD>

CLAMP :The maximum value and the minimum value of the output value should be within the range shown below.

Acceptable clamping rage	Minimum value	Maximum value
R	600	1500
G	600	1700
B	600	1600

GAIN :The maximum value and the minimum value of the output value should be within the range shown below.

Acceptable gain range	Minimum value	Maximum value
R	20	238
G	10	222
B	70	247

12.12.9 Memory/HDD Adj.-Memory Check

A. Use

- To check correspondence of data written to and that read from memory through write/read check.
- If the copy image is faulty.
- The following shows the memory names that correspond to each memory where check is made.

  WORK0 : Standard memory (DIMM0)
  WORK1 : Expanded memory (DIMM1)
  FILE0, 1 : Memory of ASIC200 installed in the MFP board
  FILE2, 3 : Not used.
  FILE4, 5 : Not used.

Rough Check

- A check is made to see if the image data reading and writing are correctly made in a very limited area.
- The progress of the check sequence is displayed in percentage.

Detail Check

- A check is made to see if the image data reading and writing are correctly made at the addresses and buses in all areas.
- The progress of the check sequence is displayed in percentage.

B. Procedure

1. Call the Service Mode to the screen.
2. Touch these keys in this order: [State Confirmation] → [Memory / HDD Adj.] → [Memory Check].
3. Select the desired type of check, either [Rough Check] or [Detail Check].
4. Press the Start key to start the check procedure.
5. When the check procedure is completed, the results are shown on the screen.
   If the check results are NG, check the memory for connection or replace the memory with a new one.

✻ Press the Stop key to interrupt the check sequence.

12.12.10 Memory/HDD Adj.-Compress / Decompression Check

A. Use

- To check whether compression and decompression are carried out properly.
- If the copy image is faulty.

B. Procedure

1. Call the Service Mode to the screen.
2. Touch these keys in this order: [State Confirmation] → [Memory / HDD Adj.] → [Compress / Decompression Check].
3. Pressing the Start key will automatically start to complete a compression/decompression check sequence.
4. The check result will be displayed.

12.12.11 Memory/HDD Adj.-JPEG Check

- Not used.

12.12.12 Memory/HDD Adj.-Memory Bus Check

A. Use

- To check to see if image data is correctly transferred from scanner to memory, and from memory to printer.
- Bus check between scanner and memory has two steps; the scanner internal check step as internal processing and the check step between scanner and memory. If either of the two steps is NG, NG1 or NG2 is displayed respectively.
- If the print image is faulty.

B. Procedure

1. Call the Service Mode to the screen.
2. Touch these keys in this order: [State Confirmation] → [Memory / HDD Adj.] → [Memory Bus Check].
3. Select either [Scanner → Memory], [Memory → PRT], or both.
4. Pressing the Start key will start the memory bus check and be terminated automatically.
5. The check result will be displayed, [OK] or [NG].

12.12.13 Memory/HDD Adj.-DSC Bus Check

A. Use

- To check the connection between the DSC board and the scanner section when the optional security kit SC-507 is installed.
- When an error is detected after checking, NG1 or NG2 is displayed depending on the location of the board where the defect is found.

B. Procedure

1. Call the Service Mode to the screen.
2. Touch these keys in this order: [State Confirmation] → [Memory / HDD Adj.] → [DSC Bus Check].
3. Touch [Scanner → DSC].
4. Pressing the Start key will start the DSC bus check and be terminated automatically.
5. The check result will be displayed.

12.12.14 Memory/HDD Adj.-HDD R/W Check

- It will be displayed only when the hard disk is installed.

A. Use

- To check to see if the hard disk is connected properly, and if read/write operation of the hard disk is correctly performed.
- When the hard disk is mounted.

B. Procedure

1. Call the Service Mode to the screen.
2. Touch these keys in this order: [State Confirmation] → [Memory / HDD Adj.] → [HDD R/W Check].
3. Pressing the Start key will start the hard disk R/W check sequence and be terminated automatically.
4. The check result will be displayed, [OK] or [NG].

12.12.15 Memory/HDD Adj.-SSD R/W Check

- It will be displayed only when the hard disk is not installed.

A. Use

- To check to see if the SSD is connected properly, and if read/write operation of the SSD is correctly performed.

B. Procedure

1. Call the Service Mode to the screen.
2. Touch these keys in this order: [State Confirmation] → [Memory / HDD Adj.] → [SSD R/W Check].
3. Pressing the Start key will start the SSD R/W check sequence and be terminated automatically.
4. The check result will be displayed, [OK] or [NG].

12.12.16 Memory/HDD Adj.-HDD Format

- It will be displayed only when the hard disk is installed.

A. Use

- To format the hard disk.
- The function proceeds in the order of physical format to logical format.
- If the hard disk is yet to be formatted, the malfunction code “C-D010” will appear. Ignore this code and continue with the formatting procedure.
- When the hard disk is mounted.
- When the hard disk is to be initialized. (Physical format to logical format)

NOTE

- **As formatting of HDD deletes movie data and OCR dictionary data, after formatting HDD, you need to reinstall these data as necessary.**

B. Procedure

1. Call the Service Mode to the screen.
2. Touch these keys in this order: [State Confirmation] → [Memory / HDD Adj.] → [HDD Format].

Physical Format

1. Touch [Physical Format].
2. Press the Start key to start the formatting sequence.
3. The sequence will be automatically terminated as it is completed.
4. Turn off the main power switch and turn it on again more than 10 seconds after.

NOTE

- **If [HDD Encryption Setting] is not set to “ON,” when the physical format is completed and the main power switch is turned OFF/ON, a message that prompts you to set an encrypting word is displayed.**
  If you perform [HDD Encryption Setting], after setting an encrypting word, perform the logical format.

Logical Format (only when initial is set up)

1. Touch [Logical Format].
2. Press the Start key to start the formatting sequence.
3. The sequence will be automatically terminated as it is completed.
4. Turn off the main power switch and turn it on again more than 10 seconds after.

✻ Formatting the hard disk will erase all data contained in it.

12.12.17 Memory/HDD Adj.-SSD Format

- It will be displayed only when the hard disk is not installed.

A. Use

- To format the SSD.
- The function proceeds in the order of physical format to logical format.
- When the hard disk is to be initialized. (Physical format to logical format)

B. Procedure

1. Call the Service Mode to the screen.
2. Touch these keys in this order: [State Confirmation] → [Memory / HDD Adj.] → [SSD Format].

Physical Format

1. Touch [Physical Format].
2. Press the Start key to start the formatting sequence.
3. The sequence will be automatically terminated as it is completed.
4. Turn off the main power switch and turn it on again more than 10 seconds after.

Logical Format (only when initial is set up)

1. Touch [Logical Format].
2. Press the Start key to start the formatting sequence.
3. The sequence will be automatically terminated as it is completed.
4. Turn off the main power switch and turn it on again more than 10 seconds after.

✻ Formatting the hard disk will erase all data contained in it.

12.12.18 Memory/HDD Adj.-SSD -> HDD Data Copy

- It will be displayed only when the hard disk is not installed.
- Making this setting is necessary only on the machine models and in the marketing areas where the hard disk is set as an option. If the hard disk is standard on the machine or in the marketing area, this setting must not be used.

A. Use

- To copy the machine data stored in SSD to the hard disk.
- To restore the authentication related data that is backed up to NVRAM when the setting of HDD installation is changed from [Not Installed] to [Installed].
- Use this function when installing the optional hard disk HD-516.
- The data to be copied to the hard disk is as follows:
  User management data/account track data/authentication device management data/Address Book/Group data/Program data/created Personal User Box/setting values of System User Box

B. Procedure

1. Call the Service Mode to the screen.
2. Touch these keys in this order: [State Confirmation] → [Memory / HDD Adj.] → [SSD -> HDD Data Copy].
3. Press the Start key to start the copying sequence.

NOTE

- **If the hard disk has data, the data is overwritten and deleted.**

4. When copying data is completed, the results appear on the screen.

12.12.19 Memory/HDD State

A. Use

- To display the condition and amount of the memory and hard disk.

NOTE

- **If the hard disk is not installed, the capacity of SSD is displayed.**

B. Procedure

- When the encryption board is mounted, the machine automatically recognizes it and displays [Set].

12.12.20 Adjustment Data List

A. Use

- To display the adjustment and setting value set in the main body.
- Use to check the adjustment and setting value set in the main body.

12.13 Test Mode

- To check the image on the printer side by letting the machine produce various types of test pattern. It also tests the printing operation in Paper Passage Test, as well as the fax transmission.
- The machine searches through the paper sources in the order of tray 2, tray 3, tray 4, LCT and tray 1 for paper of the maximum size for printing.

12.13.1 Procedure for test pattern output

1. Touch [Test Mode] to display the test mode menu.
2. Touch the desired test pattern key.
3. Set up the desired functions and press the Start key.

12.13.2 Gradation Pattern

A. Use

- To produce a gradation pattern.
- Used for checking gradation reproducibility.

<Test pattern>

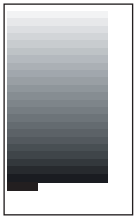

SINGLE
HYPER
256 gradations
Gradation
Cyan
Black (1PC)

A1UDF3C010DA

B. Procedure

- # of Print (“1” to 999)
- Select “SINGLE” (single copy) or MULTI (multi copy).
- Select FEET or “HYPER”.
- Select “1-Sided”, 2-Side1 or 2-Side2.
  2-Side1: The same pattern is printed on both front and back sides.
  2-Side2: The front side is blank and the pattern is printed on the back side.
- Select “Gradation”, Resolution or Error diffusion if HYPER has been selected.
- Select “12 Gradations”, 24 Gradations or 256 Gradations.

12.13.3 Halftone Pattern

A. Use

- To produce a solid halftone pattern.
- Used for checking uneven density and pitch noise.

<Test pattern>

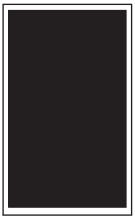

SINGLE
HYPER
Gradation
Black (1PC)
Density: 255

A1UDF3C011DA

B. Procedure

- # of Print (“1” to 999)
- Select “SINGLE” (single copy) or MULTI (multi copy).
- Select FEET or “HYPER.”
- Select “Gradation”, Resolution or Error diffusion if HYPER has been selected.
- Select “1-Sided”, 2-Side1 or 2-Side2.
  2-Side1: The same pattern is printed on both front and back sides.
  2-Side2: The front side is blank and the pattern is printed on the back side.
- Select a printable area from [Full Bleed] or [Front Half].

NOTE

- **[Front Half] is selectable only for one-side printing.**
- Type the density level (0 to “255”).

12.13.4 Lattice Pattern

A. Use

- To produce a lattice pattern.
- Used for checking fine line reproducibility and uneven density.
- A reverse pattern is also used to check for fine line reproducibility of white letters on a solid background.

<Test pattern>

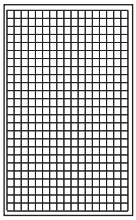

SINGLE
FEET
Black (1PC)
CD Width: 5
FD Width: 5
Density: 255
Normal

A1UDF3C012DA

B. Procedure

- # of Print (“1” to 999)
- Select “SINGLE” (single copy) or MULTI (multi copy).
- Select “FEET” or HYPER.
- Select “Gradation”, Resolution or Error diffusion if HYPER has been selected.
- Select”1-Sided”, 2-Side1 or 2-Side2.
  2-Side1: The same pattern is printed on both front and back sides.
  2-Side2: The front side is blank and the pattern is printed on the back side.
- Select Gradation or Resolution. (Only select HYPER)
- Enter CD width and FD width (0 to 191 dots).
- Type the density level (0 to “255”).
- Select “Normal” or Reverse.

12.13.5 Paper Passage Test

A. Use

- To test the printing operation in running mode.
- Use to check the printing operation in running mode from each paper source.
- If “Yes” is selected in [Pattern Printing], paper is conveyed with pattern printed.

B. Procedure

1. Call the Service Mode to the screen.
2. Touch these keys in this order: [Test Mode] → [Running Mode].
3. Touch [Pattern Printing] and select [Yes] or [No].
4. Touch [Select Tray] and select the paper feed tray to be tested.
5. When feeding paper from the manual bypass tray, touch [Paper Size]/[Paper Kind] and select paper size and type.
6. Press the Start key to start the paper passage test.
7. Pressing the Stop key will stop operation.

12.13.6 Fax Test

A. Signal Send Test

(1) Use

- Image information signals, control signals and DTMF can be individually output.
- Signal sounds are monitored by the monitor speaker.
- When the Fax Multi Line kit is installed, Line 2 can be specified.

(2) Procedure

1. Touch [Service Mode] → [Test Mode] → [FAX Test], in that order.
2. Select the [Line1] or [Line2], and touch the [Signal Send Test].
3. Select a test item.
4. Select the parameter you would like to test.
5. Press the [Start] key.
   (In order to move to another test, select the next test item after pressing the [Stop] key.)

- Signal is output from pressing [Start] to pressing [Stop].

<V34 Main CH>

- The default setting is 33600.

2400 to 33600 (step: 2400)

<V34 Control CH>

- The default setting is CTL CH.

“CTL CH” INFOc INFOa ToneA ToneB

<V8>

- The default setting is CM.

“CM” JM

<V17>

- The default setting is 14400bps.

“14400bps” 12000bps 9600bps 7200bps

<V29>

- The default setting is 9600bps.

“9600bps” 7200bps

<V27ter>

- The default setting is 4800bps.

“4800bps” 2400bps

<PB>

- The default setting is 0.

0 to 9, *, #, A, B, C, D

<DP>

- The default setting is 0.

0 to 9

<Special Tone>
- The default setting is 1100Hz.

“1100Hz”	1300Hz	1650Hz	2100Hz

<Optional Tone>
- The default setting is 200Hz.

200 to 4000 (step: 100)

<PB Tone (High)>
- The default setting is 1209Hz.

“1209Hz”	1336Hz	1477Hz	1633Hz

<PB Tone (Low)>
- The default setting is 697Hz.

“697Hz”	770Hz	852Hz	941Hz

NOTE
- **To check Line 1, [Administrator Settings] → [Fax Setting] → [Line Parameter Setting] → [Line Monitor Sound] should be set to “ON”.**
- **To check Line 2, [Administrator Settings] → [Fax Setting] → [Multi Line Settings] → [Line Parameter Setting] → [Line Monitor Sound] should be set to “ON”.**

B. Signal Receive Test

(1) Use
- Check a signaling tone by connecting the machine to the line to output a test signal of the fax board.
- Signal sounds are monitored by the monitor speaker.
- When the Fax Multi Line kit is installed, Line 2 can be specified.

(2) Procedure
1. Touch [Service Mode] → [Test Mode] → [FAX Test], in that order.
2. Select the [Line1] or [Line2], and touch the [Signal Receive Test].
3. Select a test item.
4. Select the parameter you would like to test.
5. Press the [Start] key.
   (In order to move to another test, select the next test item after pressing the [Stop] key.)

- Signal is output from pressing [Start] to pressing [Stop].
- The status of testing or results of tests are shown in the title line as follows
  RCV: Waiting signals
  OK/NG: Results of signal reception

<V17>
- The default setting is 14400bps.

“14400bps”	12000bps	9600bps	7200bps

<V29>
- The default setting is 9600bps.

“9600bps”	7200bps

<V27ter>
- The default setting is 4800bps.

"4800bps" 2400bps

<PB>
- The default setting is 0.

0 to 9, *, #, A, B, C, D

<Special Tone>
- The default setting is 1100Hz.

"1100Hz" 1300Hz 2100Hz

NOTE
- **To check Line 1, [Administrator Settings] → [Fax Setting] → [Line Parameter Setting] → [Line Monitor Sound] should be set to "ON".**
- **To check Line 2, [Administrator Settings] → [Fax Setting] → [Multi Line Settings] → [Line Parameter Setting] → [Line Monitor Sound] should be set to "ON".**

C. NCU TEST

(1) Use
- To check the operation of NCU.

(2) Procedure
1. Touch [Service Mode] → [Test Mode] → [FAX Test], in that order.
2. Select the [Line1] or [Line2], and touch the [NCU TEST].
3. Select a test item.
4. Press the [Start] key.
   (In order to move to another test, select the next test item after pressing the [Stop] key.)

NOTE
- **When CML / CTL / TEL relay test is selected and the [Start] is pressed, ON is displayed in the parameter and relay is turned to ON. When [Stop] is pressed, relay is turned OFF.**
- **When the DC-LOOP detection test is selected and [Start] is pressed, DT=0001 is shown in the title row in case of detecting the DC-LOOP. If not detected, DT=0000 is displayed.**
- **When the speaker test is selected and [Start] is pressed, On is displayed in the parameter and the speaker is turned ON. When [Stop] is pressed, the speaker is turned OFF.**

Contents of test	Device to be tested
CML Relay	IC201, IC202
CTL Relay	RL201
TEL Relay	RL501
DC-LOOP Detect	
Speaker	
Outside Ring Send	
Audio Response Send	

* RL501 mounts only the Japanese.

12.14 ADF

12.14.1 Original Stop Position

A. Use

- To manually adjust the original stop position and the read position in each of the ADF modes.
- When the result is Unable in the automatic adjustment of the original stop position.

B. Procedure

NOTE

- **Before performing this adjustment, the feed zoom adjustment needs to be complete.**
  See P.491

(1) Sub Scanning Direction 1-Side / Sub Scanning Direction 2-Side

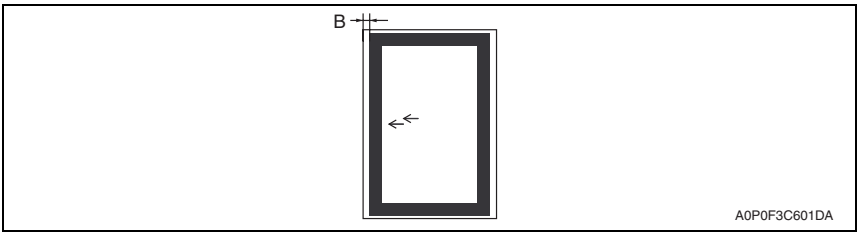

1. Place the chart in the document feed tray (with the side having an arrow facing up).
2. Make a full size copy of the chart.

NOTE

- **In the same way place the chart with the blank side facing up in the document feed tray in the duplex mode and make a copy. Check the difference in the widths of a between the chart and the second sided surface of the copy sample.**

3. Check that the difference in the widths of B between the chart and the copy sample falls within the specified range.

Specification B: 0 ± 2.0 mm
Adjustment range: -4.0 mm to +4.0 mm (1 step: 0.1 mm)

4. Call the Service Mode to the screen.
5. Touch [ADF] → [Original Stop Position].
6. Touch [Sub Scanning Direction 1-Side] or [Sub Scanning Direction 2-Side].
7. Enter the value from the ten-key pad. (Press the [+/-] key to change the +/- code.)
   If the difference in the widths of B is greater than the specifications, enter the + value.
   If the difference in the widths of B is smaller than the specifications, enter the - value.
8. Touch [END].
9. Touch [Exit] on the Service Mode screen.
10. Turn OFF the main power switch, wait for 10 sec., then turn the switch ON.
11. Make a copy of the chart again and check that the difference in the widths of B falls within the specified range.

(2) Main Scanning (Front) / Main Scanning (Back)

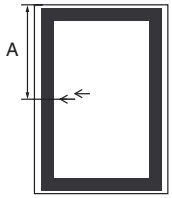

1. Place the chart in the document feed tray (with the side having an arrow facing up).
2. Make a full size copy of the chart.

NOTE

- **In the same way place the chart with the blank side facing up in the document feed tray in the duplex mode and make a copy. Check the difference in the widths of a between the chart and the second sided surface of the copy sample.**

3. Check that the difference in the widths of A between the chart and the copy sample falls within the specified range.

Specification A: 0 ± 2.0 mm
Adjustment range: -3.0 mm to +3.0 mm (1 step: 0.1 mm)

4. Call the Service Mode to the screen.
5. Touch [ADF] → [Original Stop Position].
6. Touch [Main Scanning (Front)] or [Main Scanning (Back)].
7. Enter the value from the ten-key pad. (Press the [+/-] key to change the +/- code.)
   If the difference in the widths of A is greater than the specifications, enter the + value.
   If the difference in the widths of A is smaller than the specifications, enter the - value.
8. Touch [END].
9. Touch [Exit] on the Service Mode screen.
10. Turn OFF the main power switch, wait for 10 sec., then turn the switch ON.
11. Make a copy of the chart again and check that the difference in the widths of A falls within the specified range.

12.14.2 Registration Loop Adj.

<Use>

- To adjust the length of the loop to be formed in paper before the registration rollers.
- When an original misfeed or skew occurs.

<Procedure>

The default setting is 0.
Adjustable range: -5 mm to + 5 mm (in 1-mm increments)

1. Call the Service Mode to the screen.
2. Touch [ADF] → [Registration Loop Adj].
3. Select either [1-Side] or [Second Side] for the adjustment.
4. Press the clear key and change the setting value using the 10-key pad. (Press the [+/-] key to change the +/- code.)
   The amount of loop increases by the amount of positive (+) value and decreases by the amount of negative (-) value.
5. Touch [END].
6. Touch [Exit] on the Service Mode screen.
7. Turn OFF the main power switch, wait for 10 sec., then turn the switch ON.

12.14.3 Auto Stop Position Adjustment

A. Use

- To automatically adjust the read position for the Sub Scanning Direction.
- To check skew feed.
- When ADF has been replaced.

B. Procedure

(1) Sub Scanning Direction 1-SIde

1. Call the Service Mode to the screen.
2. Touch [ADF] → [Auto Stop Position Adjustment].
3. Touch [Sub Scanning Direction 1-SIde].
4. Place the chart in the document feed tray (with the side having an arrow facing up).
5. Press the Start key.
6. Make sure that result is OK. Then, touch [SET].
7. Touch [END].
8. Touch [Exit] on the Service Mode screen.
9. Turn OFF the main power switch, wait for 10 sec., then turn the switch ON.

NOTE

If the result is Unable:

- **Check and correct the skew of the document.**
- **Manually correct the value of [Original Stop Position].**
  See P.481

(2) Sub Scanning Direction 2-SIde

1. Call the Service Mode to the screen.
2. Touch [ADF] → [Auto Stop Position Adjustment].
3. Touch [Sub Scanning Direction 2-SIde].
4. Place the chart in the document feed tray (Set the chart with its blank side facing upward).
5. Press the Start key.
6. Make sure that result is OK. Then, touch [SET].
7. Touch [END].
8. Touch [Exit] on the Service Mode screen.
9. Turn OFF the main power switch, wait for 10 sec., then turn the switch ON.

NOTE

If the result is Unable:

- **Check and correct the skew of the document.**
- **Manually correct the value of [Original Stop Position].**
  See P.481

(3) Main Scanning (Front)

1. Call the Service Mode to the screen.
2. Touch [ADF] → [Auto Stop Position Adjustment].
3. Touch [Main Scanning (Front)].
4. Place the chart in the document feed tray (with the side having an arrow facing up).
5. Press the Start key.
6. Make sure that result is OK. Then, touch [SET].
7. Touch [END].
8. Touch [Exit] on the Service Mode screen.
9. Turn OFF the main power switch, wait for 10 sec., then turn the switch ON.

NOTE

If the result is Unable:

- **Check and correct the skew of the document.**
- **Manually correct the value of [Original Stop Position].**
  See P.481

(4) Main Scanning (Back)

1. Call the Service Mode to the screen.
2. Touch [ADF] → [Auto Stop Position Adjustment].
3. Touch [Main Scanning (Back)].
4. Place the chart in the document feed tray (Set the chart with its blank side facing upward.).
5. Press the Start key.
6. Make sure that result is OK. Then, touch [SET].
7. Touch [END].
8. Touch [Exit] on the Service Mode screen.
9. Turn OFF the main power switch, wait for 10 sec., then turn the switch ON.

NOTE

If the result is Unable:

- **Check and correct the skew of the document.**
- **Manually correct the value of [Original Stop Position].**
  See P.481

12.14.4 Paper Passage

A. Use

- To check for paper passage through the ADF in each of the ADF modes.
- Used for checking the document path for any abnormal condition when a document misfeed occurs.

B. Procedure

1. Call the Service Mode to the screen.
2. Touch [ADF] → [Paper Passage].
3. Select a paper passage mode to be tested from [1-Sided No Detect], [1-Sided Mixed Org.], [2-Sided], or [AMS Mixed Org.].
4. Set the original in the feed tray.
5. The Start key changes from red to blue.
6. Press the Start key. The operation starts.

NOTE

- **After starting the operation by pressing the Start key, if the Start key is pressed during the operation, the operation will be suspended. Then, if the Start key is pressed again during the suspension, the operation will be resumed.**
- **If the Stop key is pressed during the test operation, the test will be forced to end.**
- **If there is no Original set in the feed Tray, the Start key will not work.**
- **All Originals set in the feed Tray are passed through. Upon the completion of all Originals passed through, the Paper Through Test ends.**

12.14.5 Sensor Check

A. Use

- To check sensors on the paper path.
- When a document misfeed occurs.

B. Procedure

1. Call the Service Mode to the screen.
2. Touch [ADF] → [Sensor Check].
3. Operate the sensor to check by using paper or the like, and check the screen display. (Paper detected: 1, No paper detected: 0)

C. Sensor check screen

- This is only typical screen which may be different from what are shown on each individual main unit.

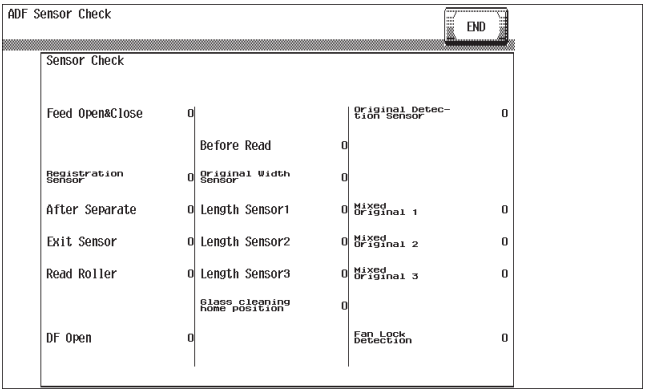

A1UDF3E024DA

D. Sensor check list

Symbol	Panel display	Part/Signal name	Operation characteristics/ panel display	
			1	0
PS14	Feed Open&Close	Upper door sensor	Open	Close
PS3	Registration Sensor	Document registration sensor	Paper present (Blocked)	Paper not present (Unblocked)
PS2	After Separate	Separation roller sensor	Paper present (Unblocked)	Paper not present (Blocked)
PS5	Exit Sensor	Document exit sensor	Paper present (Unblocked)	Paper not present (Blocked)
PS12	Read Roller	Reading roller release position sensor	Pressure (Blocked)	Retraction (Unblocked)
RS201	DF Open	Original cover switch (main body)	Open	Close

Symbol	Panel display	Part/Signal name	Operation characteristics/ panel display	
			1	0
PS4	Before Read	Reading roller sensor	Paper present (Blocked)	Paper not present (Unblocked)
VR1	Original Width Sensor	Document CD size sensor	Analog value	
PS6	Length Sensor1	Document FD size sensor/1	Paper present	Paper not present
PS7	Length Sensor2	Document FD size sensor/2	Blocked	Unblocked
PS8	Length Sensor3	Document FD size sensor/3	Paper present	Paper not present
PS13	Glass Cleaning home position	Glass cleaning roller home sensor	At home	Not at home
PS1	Original Detection Sensor	Document set sensor	Paper present	Paper not present
PS9	Mixed Original 1	Mixed Original sensor/1	Paper present	Paper not present
PS10	Mixed Original 2	Mixed Original sensor/2	Paper present	Paper not present
PS11	Mixed Original 3	Mixed Original sensor/3	Paper present	Paper not present
FM1	Fan Lock Detection	DF cooling fan motor	Lock detected	Normal status

12.14.6 Original Tray Width

A. Use

- To set the values of maximum (A3 position) and minimum (B6 position) widths on the document width detection variable resistor.
- When an original misfeed occurs.
- When an original size detection error occurs.
- When the document width detection variable resistor has been replaced.
- When the DF control board has been replaced.

B. Procedure

1. Call the Service Mode to the screen.
2. Touch [ADF] → [Original Tray Width].

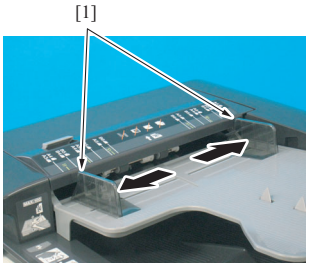

A1UDF3C026DA

3. Widen the width across the edge guides [1] by sliding them to the “A3” position.
4. Touch [Max. Width].
5. Press the Start key.
6. OK is displayed when the adjustment has been completed.

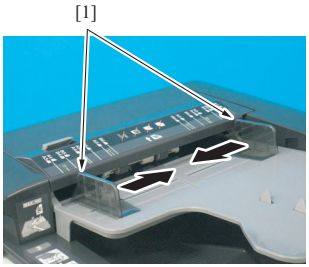

A1UDF3C027DA

7. Narrow the width across the edge guides [1] by sliding them to the “B6” position.
8. Touch [Min. Width].
9. Press the Start key.
10. OK is displayed when the adjustment has been completed.
11. Touch [END].
12. Touch [Exit] on the Service Mode screen.
13. Turn OFF the main power switch, wait for 10 sec., then turn the switch ON.

NOTE

If the result is NG:

- **Possible causes includes failure of the document width detection variable resistor, wrong wiring to the volume and failure of the DFCB.**

12.14.7 Read Pos Adj

A. Use

- To adjust the original read position.
- When the first/second carriage, the scanner wire, the scanner assy, the DF original glass, and/or the have been replaced.

B. Procedure

(1) Auto Adjust

1. Call the Service Mode to the screen.
2. Touch [ADF] → [Read Pos Adj].
3. Touch [Auto Adjust].

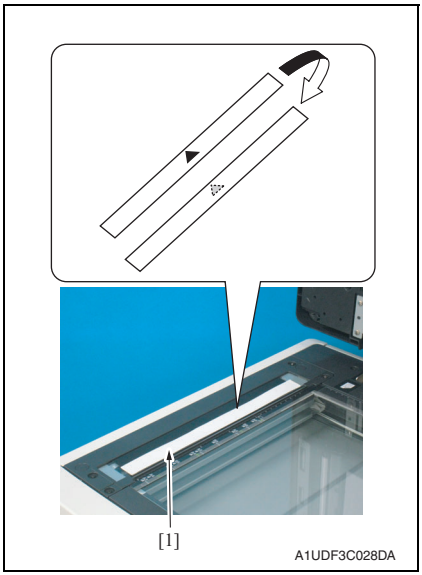

4. Open the ADF.
5. Place the ADF reading chart [1] so that a triangular mark may become the original glass side (downward) and the pointed tip of the triangle points toward the black sheet on the left side.
6. Press the Start key.

NOTE

- **Be sure that the ADF reading chart is in position.**
- **Keep the automatic document feeder open while making the adjustment.**

7. Make sure that the result is OK.
8. Touch [END].
9. Touch [Exit] on the Service Mode screen.
10. Turn OFF the main power switch, wait for 10 sec., then turn the switch ON.

NOTE

If the result is Unable:

- **Check that the chart is in the correct place.**
- **Make the manual adjustment on the [Read Pos Adj] screen.**
  See P.490

(2) Read Pos Adj

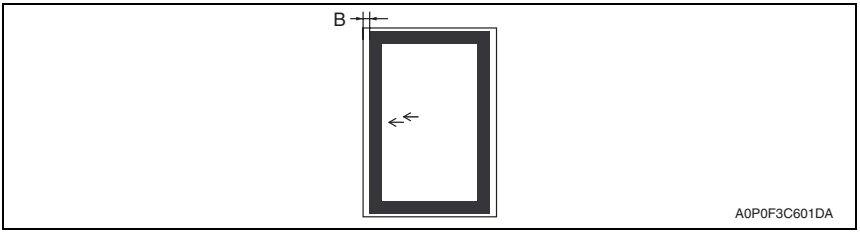

1. Place the chart in the document feed tray (with the side having an arrow facing up).
2. Make a full size copy of the chart.

Specification B: 0 ± 1.0 mm
Adjustment range: -89 mm to +89 mm (1 step: 1 mm)

3. Call the Service Mode to the screen.
4. Touch [ADF] → [Read Pos Adj].
5. Touch [Read Pos Adj].
6. Enter the value using the [-]/[+] keys.
   If the difference in the widths of B is greater than the specifications, enter the - value.
   If the difference in the widths of B is smaller than the specifications, enter the + value.
7. Touch [END].
8. Touch [Exit] on the Service Mode screen.
9. Turn OFF the main power switch, wait for 10 sec., then turn the switch ON.
10. Make a copy of the chart again and check that the difference in the widths of B falls within the specified range.

12.14.8 Feed Zoom

A. Use

- To adjust the feed zoom of ADF in the feeding direction.
- When ADF has been replaced.

B. Procedure

(1) Auto Adjust

1. Call the Service Mode to the screen.
2. Touch [ADF] → [Feed Zoom].
3. Touch [Auto Adjust].
4. Place the chart in the document feed tray (with the side having an arrow facing up).
5. Press the Start key.
6. Make sure that result is OK. Then, touch [SET].
7. Touch [END].
8. Touch [Exit] on the Service Mode screen.
9. Turn OFF the main power switch, wait for 10 sec., then turn the switch ON.

(2) Orig. Feed Zoom Ad

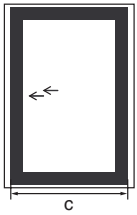

1. Place the chart in the document feed tray (with the side having an arrow facing up).
2. Make a full size copy of the chart.

Specification C: 0 ± 1.0 mm
Adjustment range: -2.00% to +2.00% (1 step: 0.1%)

3. Call the Service Mode to the screen.
4. Touch [ADF] → [Feed Zoom].
5. Touch [Orig. Feed Zoom Ad].
6. Enter the value using the [-]/[+] keys.
   If the difference in the widths of C is greater than the specifications, enter the - value.
   If the difference in the widths of C is smaller than the specifications, enter the + value.
7. Touch [END].
8. Touch [Exit] on the Service Mode screen.
9. Turn OFF the main power switch, wait for 10 sec., then turn the switch ON.
10. Make a copy of the chart again and check that the difference in the widths of C falls within the specified range.

12.14.9 Scanning Light Adjustment

A. Use

- To adjust the scanning light of ADF.
- Used for adjusting the difference in the scanning lights between scanning from the original glass and scanning from the ADF original glass.

B. Procedure

Adjustable range: -4 to + 4 (1 step)

1. Call the Service Mode to the screen.
2. Touch [ADF] → [Scanning Light Adjustment].
3. Select a color by pressing [Red], [Green], or [Blue].
4. Press the value using the [+]/[-] key.

NOTE

- **It is recommended that the scanning light adjustment should be made by the same steps for all the three colors of red, green, and blue.**

5. Touch [END].
6. Touch [Exit] on the Service Mode screen.
7. Turn OFF the main power switch, wait for 10 sec., then turn the switch ON.

12.14.10 Mixed original Size adjustment

A. Use

- To adjust paper length detection accuracy used during paper feed in ADF mixed original mode.
- To set the threshold for each size detection based on the length detected when feeding standard sizes (large and small sizes).
- When the DF control board has been replaced.

B. Procedure

1. Call the Service Mode to the screen.
2. Touch [ADF] → [Mixed original Size adjustment].
3. Place the chart in the document feed tray (with the side having an arrow facing up).
4. Press the Start key.
5. Make sure that result is OK. Then, touch [SET].
6. Touch [END].
7. Touch [Exit] on the Service Mode screen.
8. Turn OFF the main power switch, wait for 10 sec., then turn the switch ON.

12.14.11 FD-Mag. Adj. (B)

A. Use

- To adjust the feed zoom in the back side feeding direction on the ADF.
- When ADF has been replaced.

B. Procedure

(1) Auto Adjust

1. Call the Service Mode to the screen.
2. Touch [ADF] → [FD-Mag. Adj. (B)].
3. Touch [Auto Adjust].
4. Place the chart in the document feed tray (Set the chart with its blank side facing upward).
5. Press the Start key.
6. Make sure that result is OK. Then, touch [SET].
7. Touch [END].
8. Touch [Exit] on the Service Mode screen.
9. Turn OFF the main power switch, wait for 10 sec., then turn the switch ON.

(2) Orig. Feed Zoom Ad

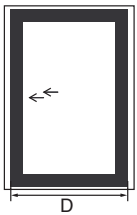

1. Place the chart in the document feed tray (Set the chart with its blank side facing upward).
2. Make a full size copy of the chart.
3. D width on the chart and one on the copy sample are measured and adjusted so that the difference of D width satisfies the specifications shown below.

Specification D: 0 ± 1.0 mm
Adjustment range: -2.00% to +2.00% (1 step: 0.1%)

4. Call the Service Mode to the screen.
5. Touch [ADF] → [FD-Mag. Adj. (B)].
6. Touch [Orig. Feed Zoom Ad].
7. Enter the value using the [-]/[+] keys.
   If the difference in the widths of D is greater than the specifications, enter the - value.
   If the difference in the widths of D is smaller than the specifications, enter the + value.
8. Touch [END].
9. Touch [Exit] on the Service Mode screen.
10. Turn OFF the main power switch, wait for 10 sec., then turn the switch ON.
11. Make a copy of the chart again and check that the difference in the widths of D falls within the specified range.

12.15 FAX setting

- Settings are available only when the optional fax kit (FK-508) is mounted.
- The line 1/2 can be specified. When the Line 2 is specified, only the Modem/NCU, Communication, Network and Initialization items are displayed.

12.15.1 Line1, Line2-Modem/NCU

A. V34:1/2 : RX Max. Bit Speed

(1) Use

- To set the max. bit speed for reception in V.34.

(2) Procedure

- The default setting is 33600 bps.

2400 to 33600 bps (step: 2400 bps)

B. V34:1/2 : TX Max. Bit Speed

(1) Use

- To set the max. bit speed for transmission in V.34.

(2) Procedure

- The default setting is 33600 bps.

2400 to 33600 bps (step: 2400 bps)

C. V34:1/2 : Control CH Speed

(1) Use

- A bit speed of the control channel.
- The negotiation of 2400/1200 is performed in the V.34 start-up procedure.

(2) Procedure

- The default setting is 1200 bps.

“1200 bps” 2400 bps

D. V34:1/2 : Max. SYMB Speed

(1) Use

- Maximum modulation speed (baud rate) of V.34

3429	33.6 k to 4.8 k
3200	31.2 k to 2.4 k
3000	28.8 k to 2.4 k
2800	
2400	

- Effective both at the time of sending and receiving.
- The upper limit value of V.34 maximum bit speed is determined.
- Normally you do not need to change the value. In case that a V.34 error frequently occurs, you can attempt to set up SYMB3000 and decrease the symbol rate, for instance.

(2) Procedure

- The default setting is 3429 SYMB.

2400 SYMB	2800 SYMB	3000 SYMB
3200 SYMB	“3429 SYMB”	

E. V34:2/2 : SYMB Select Criterion (S/N)

(1) Use

- To set the SYMB Select Criterion (S/N).
- S/N is measured by sending and receiving line conditioning signal (L1/L2) in the Phase 2. Its result determines the SYMB speed (modulation speed).

(2) Procedure

- The default setting is 0 dB.

-6 to 6 dB (step: 1 dB)

- It becomes easy to select a high SYMB by using “- direction”.

F. V34:2/2 : SYMB Select Criterion (Distortion)

(1) Use

- To set the SYMB Select Criterion (Distortion).
- S/N is measured by sending and receiving line conditioning signal (L1/L2) in the Phase 2. Its result determines the SYMB speed (modulation speed).

(2) Procedure

- The default setting is 0 dB.

-6 to 6 dB (step: 1 dB)

- It becomes easy to select a high SYMB by using “+ direction”.

G. V34:2/2 : Main CH Speed Selection Standard

(1) Use

- The bit speeds of V.34 are determined by the Phase 3 (training).
- This functional parameter sets thresholds for the bit speed determination.

(2) Procedure

- The default setting is 0 dB.

-8 to 7 dB (step: 1 dB)

- It becomes easy to select a high speed by using “- direction”.

H. V17 Send Max Speed: TX Max. Speed

(1) Use

- To set the max. speed for transmission.

(2) Procedure

- The default setting is V17-14400bps.

“V17-14400bps”	V17-12000bps	V17-9600bps
V17-7200bps	V29-9600bps	V29-7200bps
V27-4200bps	V27-2400bps	

I. V17 Send Max Speed: RX Max. Speed

(1) Use

- To set the max. speed for reception.

(2) Procedure

- The default setting is V17-14400bps.

“V17-14400bps”	V29-9600bps	V27-4800bps

J. TxATT: PIX TxATT

(1) Use

- To set the output level of PIX TxATT.
- Directly sets modem. There are no external attenuator.

(2) Procedure

- The setting value are different depending on the country.

K. TxATT: TONE/Procedure Signal TxATT

(1) Use

- To set the output level of TONE/Procedure Signal TxATT.
- Directly sets modem. There are no external attenuator.

(2) Procedure

- The setting value are different depending on the country.

L. TxATT: CED/ANSam TxATT

(1) Use

- To set the output level of CED/ANSam TxATT.
- Directly sets modem. There are no external attenuator.

(2) Procedure

- The setting value are different depending on the country.

M. TxATT: DTMF TxATT

(1) Use

- To set the output level of DTMF TxATT.
- Directly sets modem. There are no external attenuator.

(2) Procedure

- The setting value are different depending on the country.

N. Level: CD/SED ON Level

(1) Use

- To set reception signal sensitivity level.
- SED is not used.

(2) Procedure

- The default setting is -48 dBm.

-48 to -33 dBm (step: 5 dBm)

O. Level: DTMF H-L Level Difference

(1) Use

- To set DTMF H-L level difference.

(2) Procedure

- The default setting is 2.0 dB.

1.0 to 4.0 dB (step: 0.5 dB)

P. Cable EQL: TX

(1) Use

- Frequency response of the cable attenuation equalizer.

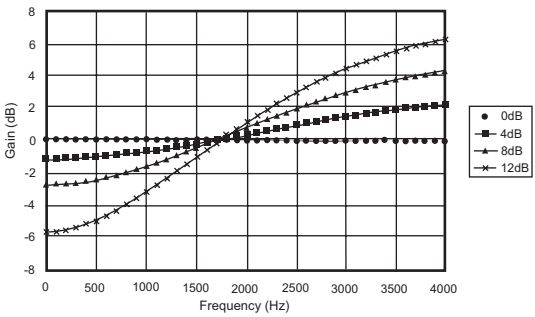

(2) Procedure

- The default setting is 0 dB.

0 to 12 dB (step: 4 dB)

Q. Cable EQL: RX

(1) Use

- Frequency response of the cable attenuation equalizer.

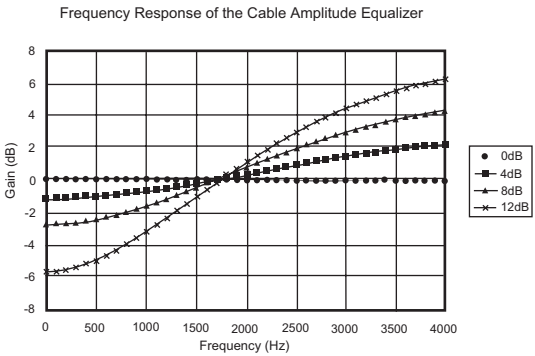

(2) Procedure

- The default setting is 0 dB.

0 to 12 dB (step: 4 dB)

12.15.2 Line 1, Line 2-Network

A. Network Setting 1: Receive Signal Detection Mode

(1) Use

- To set whether to detect the receive signal by the number of times or by time.
- Sets to “Time” when ringer can not be detected by the number.

(2) Procedure

- The default setting is No. of Times.

“No. of Times” Time

B. Network Setting 1: BUSY TONE Detection

(1) Use

- To set whether to use the Busy Tone detection or not.

(2) Procedure

- The default setting is OFF.

ON “OFF”

C. Network Setting 1: No. of Times of Busy Tone Detection

(1) Use

- To set the number of times of Busy Tone detection.

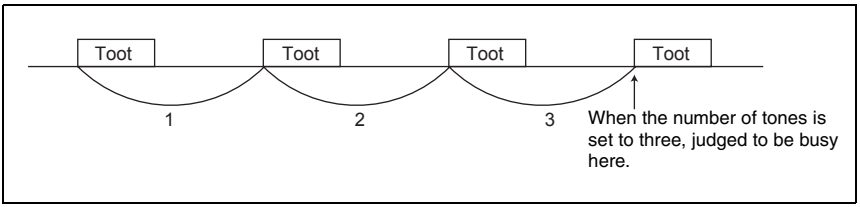

(2) Procedure

- The default setting is 0.

0 to 15 count (step: 1)

D. Network Setting 2: 1300 Hz Detection

(1) Use

- To set whether to use the 1300 Hz detection or not.
- Set this function to “ON” if the facsimile network (F-net) is to be used.

(2) Procedure

- The default setting is OFF.

ON “OFF”

E. Network Setting 2: Dial Tone Detection

(1) Use

- To set whether to use the Dial Tone detection or not.

(2) Procedure

- The default setting is ON.

“ON” OFF

F. Network Setting 2: DC-LOOP Check

(1) Use

- Checks the DC loop current before dialing.
- When the current is zero, an error occurs. (T.80)
- You can change the setting to be compliant to standards in other countries. In Japan, set this parameter to OFF.

(2) Procedure

- The default setting is OFF.

ON "OFF"

G. Network Setting 2: min. RING OFF Time

(1) Use

- MInimum time to recognize ringer interval.
  For country spec.

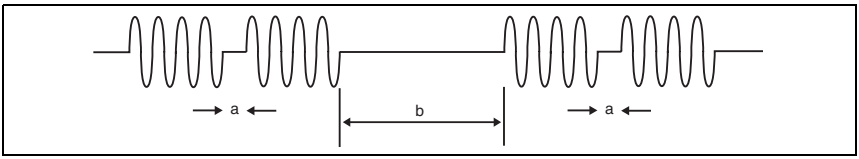

b: Ring-off time
a: To avoid judging "a" as a ring-off time.

(2) Procedure

- The default setting is 0 ms.

0 to 1000 ms (step: 100 ms)

H. Network Setting 2: Response Waiting Time

(1) Use

- To set the response waiting time.

(2) Procedure

- The default setting is 55 s.

35 to 115 sec (step: 5 s)

I. Network Setting 2: Pause Time

(1) Use

- The pause time for one pause key (pause between digits)

(2) Procedure

- The default setting is 1 s.

1 to 7 sec (step: 1 s)

12.15.3 Line 1-System

A. Display Setting: Closed area Rx

(1) Use

- To set whether or not to use the menu display for closed reception by using F-code for junk fax messages.

(2) Procedure

- The default setting is ON.

"ON"	OFF

B. Display Setting: Re-Transmission

(1) Use

- To set whether to use the re-transmission function or not.

(2) Procedure

- The default setting is ON.

"ON"	OFF

C. Display Setting: Compulsory Memory RX

(1) Use

- To set whether to use the compulsory memory reception function or not.

(2) Procedure

- The default setting is ON.

"ON"	OFF

- When turned "ON", the function permits selection of ON or OFF setting for the compulsory memory reception function that allows a document when received not to be printed automatically and, instead, to be printed through manual operation.

D. Display Setting: Reject Calls

(1) Use

- To set whether to use the reject calls function or not.

(2) Procedure

- The default setting is OFF.

ON	"OFF"

- Menu display for the Reject Calls function. When turned "ON", the function displays the function that allows the user to set a remote machine to be rejected as a reject call number.

E. Display Setting: Relay

(1) Use

- To set whether to use the relay function or not.

(2) Procedure

- The default setting is ON.

"ON"	OFF

F. Scan Setting: Frame Erasure HP

(1) Use

- To set the frame erasure size during reading.
- The four edges of the original are erased by the same width.

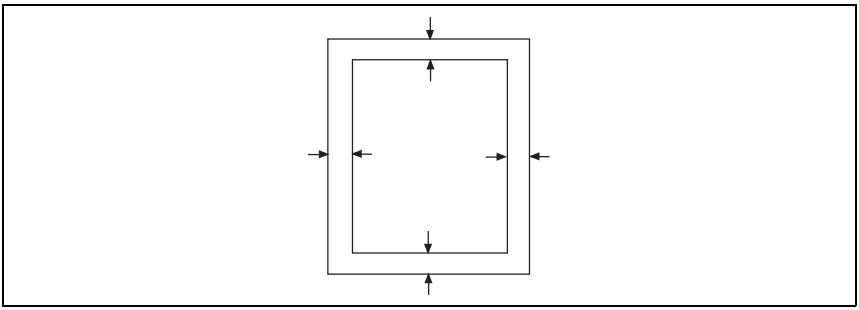

- Erases the outer lines to prevent black lines from appearing. Effective in the book transmission.

(2) Procedure

- The default setting is 10 mm.

5 mm “10 mm” 15 mm

G. System Function: Fax Board Watchdog

(1) Use

- To set whether to enable watchdog by the fax board CPU or not.
  “ON”: Reset when hung up.
  “OFF”: Keeps being hung up.

(2) Procedure

- The default setting is ON.

“ON” OFF

H. System Function: Fax BOOT Rewrite on ISW

(1) Use

- Required when a BOOT BLOCK program is upgraded or a hardware is changed.

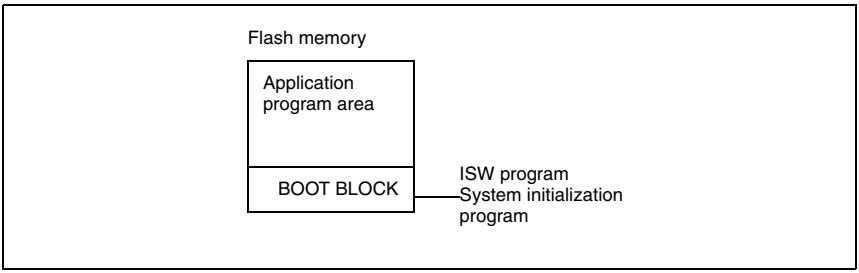

(2) Procedure

- The default setting is OFF.

ON “OFF”

I. System Function: Error Code Display Time

(1) Use

- To set the communication error code display time.

(2) Procedure

- The default setting is 20 s.

10 to 250 s, HOLD

J. Communication Setting: Auto Rotation Send (LT)

(1) Use

- To set whether to rotate the Letter size original automatically or not for transmission.
  "ON": Transmits in the A4 width.
  "OFF": Transmits in the A3 width.

(2) Procedure

- The default setting is ON.

"ON" OFF

K. Communication Setting: Auto Rotation Send (A4T)

(1) Use

- To set whether to rotate the A4T size original automatically or not for transmission.
  "ON": Transmits in the A4 width.
  "OFF": Transmits in the A3 width.

(2) Procedure

- The default setting is ON.

"ON" OFF

L. Communication Setting: Error Page Resending

(1) Use

- To set whether to retransmit, after a communication error occurs, the document starting with the error page or all pages.
  All Page: Retransmit the document all pages
  Error Page: Retransmit the document starting with the error page

(2) Procedure

- The default setting is Error Page.

"Error Page" All Page

M. Communication Setting: Number of Redials (Error Page)

(1) Use

- To set the number of redials for the error page.
- Counted as a busy redial when the error page redial is busy.

(2) Procedure

0 to 7 (step: 1)

NOTE

- **The default setting is different depending on the country.**

12.15.4 Line 1-Fax File Format

The following data can be initialized.

- All of the scan/fax documents stored in the box are erased.
- All of the boxes produced automatically by the F code are erased.

  Supplement: For the formats of the Fax Function Parameter and the Communication Journal, see “Initialization”.
  See P.533

1. Display the [Service Mode] screen.
2. Touch the [FAX] key.
3. Touch the [Fax File Format] key.
4. Press [START] key.
5. The Fax File Format is executed.

12.15.5 Line 1, Line 2-Communication

A. Protocol: V8 / V34 Protocol

(1) Use

- To set whether to use the V.8/V.34 protocol or not.

(2) Procedure

- The default setting is ON.

“ON”	OFF

B. Protocol: V17 EP TONE (Line 1 only)

(1) Use

- Whether the EP tone (Echo Protect: 2100Hz) is added to the top of the training signal.

(2) Procedure

- The default setting is ON.

“ON”	OFF

C. Protocol: V29 EP TONE (Line 1 only)

(1) Use

- Whether the EP tone (Echo Protect: 2100Hz) is added to the top of the training signal.

(2) Procedure

- The default setting is OFF.

ON	“OFF”

D. Protocol: V17 Selection Mode “-” (Line 1 only)

(1) Use

- V.34 is not used when a dash (-) is added at the top of dial number.

(2) Procedure

- The default setting is OFF.

ON	“OFF”

E. Protocol: ANSam Send Time (Line 1 only)

(1) Use

- To set the transmission time for the V.8 protocol signal ANSam.

(2) Procedure

- The default setting is 4.0 s.

1.0 to 5.5 s (step: 0.5 s)

F. Int'l Comm. Function: Foreign Communication Function

(1) Use

- To set whether or not to use the mode that employs the number of DIS waiting times.

(2) Procedure

- The default setting is ON.

"ON" OFF

G. Int'l Comm. Function: No. of DIS Waiting Times at Foreign Communication

(1) Use

- To set the number of DIS waiting times.

(2) Procedure

- The default setting is 1.

"1" 2

H. Int'l Comm. Function: V34 Speed

(1) Use

- To set the V.34 international communication mode speed.

(2) Procedure

- The default setting is 28800 bps.

16800 to 33600 bps (step: 2400 bps)

I. Int'l Comm. Function: V17 Speed

(1) Use

- To set the V.17 international communication mode speed.

(2) Procedure

- The default setting is 7200 bps.

7200 to 14400 bps (step: 2400 bps)

J. Int'l Comm. Function: V29 Speed

(1) Use

- To set the V.29 international communication mode speed.

(2) Procedure

- The default setting is 4800 bps.

2400 to 9600 bps (step: 2400 bps)

K. TIMER 1: T1

(1) Use

- T1 timer (T.30 standard) :Calling: Designate by the response waiting timer
  :Called: Starts after DIS is output. The waiting time until DCS is received.
- Response waiting timer (55sec)
  : Calling: Starts after dialing. Until CED is received.

(2) Procedure

- The default setting is 35 s.

30 to 90 s (step: 5 s)

L. TIMER 1: DCS-TCF DELAY (Line 1 only)

(1) Use

- To set the delay time between DCS and TCF.

(2) Procedure

- The default setting is 80 ms.

50 to 150 ms (step: 10 ms)

M. TIMER 1: CED-DIS DELAY (Line 1 only)

(1) Use

- To set the delay time between CED and DIS.

(2) Procedure

- The default setting is 80 ms.

50 to 150 ms (step: 10 ms)

N. TIMER 1: PIX-PMC DELAY (Line 1 only)

(1) Use

- To set the delay time between PIX and PMC.

(2) Procedure

- The default setting is 80 ms.

50 to 150 ms (step: 10 ms)

O. TIMER 2: EOL-EOL (Line 1 only)

(1) Use

- To set the transmission time between EOLs.

(2) Procedure

- The default setting is 13.0 s.

4.0 to 25.5 s (step: 0.5 s)

P. TIMER 2: CFR-PIXWAIT (Line 1 only)

(1) Use

- Sets the waiting time from CFR is sent to the image signals are received.
- Radio fax on boats occasionally requires more than 6 sec.

(2) Procedure

- The default setting is 6.0 s.

6.0 to 25.5 s (step: 0.5 s)

Q. TIMER 2: EOM-PIXWAIT (Line 1 only)

(1) Use

- Waiting time to receive PIX before sending DIS when EOM is used.
- Some fax machines sends PIX without returning to Phase B in spite of EDM.

(2) Procedure

- The default setting is 5.5 s.

5.5 to 25.5 s (step: 0.5 s)

R. TIMER 2: JM WAIT (Line 1 only)

(1) Use

- Time to continue outputting CM until receiving JM.

(2) Procedure

- The default setting is 9.0 s.

6.0 to 25.5 s (step: 0.5 s)

S. Others: ECM Function

(1) Use

- Set whether or not to cancel reception ECM (error correction mode).

(2) Procedure

- The default setting is ON.

“ON”	OFF

T. Others: Frame Size at ECM TX

(1) Use

- To set the frame size at ECM transmission.

(2) Procedure

- The default setting is 256.

64	“256”

U. Others: Coding Ability

(1) Use

- To set the coding ability.
- Effective to both sending and reception.

(2) Procedure

- The default setting is MH/MR/MMR/JBIG.

MH	MH/MR	MH/MR/MMR	MH/MR/MMR/JBIG

12.15.6 Line 1-List Output

A. Report Addition Information

(1) Use

- To set whether or not to add the diagnosis code or dial number to the communication journal.
- Diagnosis Code: The diagnosis code is printed on the communication journal.
- Dial Number: The dial number is printed on the communication journal.

(2) Procedure

- The default setting is OFF.

Diagnosis Code	Dial Number	“OFF”

B. TX Result Report

(1) Use

- To set whether or not to add image to the transmission result report.
- Even if set to “With image” images are not attached at the time of the quick memory transmission and the manual transmission.

(2) Procedure

- The default setting is Without image.

With image	“Without image”

C. Protocol Trace Auto Output

(1) Use

- To set the timing for the protocol trace auto output.

(2) Procedure

- The default setting is OFF.

Always	Error	“OFF”

12.15.7 Line 1-Function Parameter

A. Use

- Function parameters can be set through addressing.

B. Procedure

1. Display the [Service Mode] screen.
2. Touch the [FAX] key.
3. Touch the [Function Parameter] key.
4. Select the address and then, enter the address using [A] to [F] key or keypad.

* A Cursor is movable if ⬅ or ➡ is pushed.

5. Next, select the data and enter a value using binary numbers with keypad.
6. When the address and the value are correct, touch the [Apply] key.
7. After the settings have been completed, touch the [END] key.

C. ADDRESS PARAMETER LIST

NOTE

- **When changing a value in this address parameter list, be sure to comply with the phone line standards of other countries. Depending on values that have been changed, compliance with the phone line standards of other countries may not be obtained.**

Setting	Address	Item	Contents								Default			CSRC	
			bit7	bit6	bit5	bit4	bit3	bit2	bit1	bit0	Japan	North America	Europe	Com-mand	Parame-ter
Utility Mode (0-3)	0b0000	Redial interval					Redial interval (min, HEX, 0 - 15)				0x03	0x03	0x03	X0	00
Utility Mode (0-2)	0b0001	No. of busy redials					No. of busy redials (No, HEX, 0 - 15)				0x03	0x01	0x03	X0	01
Utility Mode Special Setting (0-2)	0b0002	No. of error redials					No. of error redials (No, HEX, 0 - 15)				0x03	0x01	0x03	X0	02
Utility Mode (0-2) Utility Mode Special Setting (0-2,4)	0b0003	Setting related to FAX memory		V34 mode at the time of error page redial (0: Inhibited, 1: Enabled)		Resend from the first page at the time of error page redial 0: Retransmit-ted from error page 1: Retransmit-ted from initial page	Call acceptance operation with toner empty (0: Refused, 1: Permitted)				0x00	0x00	0x00	X0	03
Utility Mode (3-5) Utility Mode Special Setting (2,6,7)	0b0004	FAX communication HP			Quick memory transmission (0: OFF, 1: ON)	File deleted after polled transmis-sion (0: Yes, 1: No)	Reception mode (0: Auto, 1: Manual)	V.34 0: OFF 1: ON	International transmission (0: OFF, 1: ON)	ECM transmission (0: OFF, 1: ON)	0x05	0x05	0x05	X0	04
Utility Mode (0,1,6)	0b0005	Forward TX Setting		Two-sided recording of FAX (0: Possible. 1: Impossible)			Default transfer FAX setting (00: Not specified, 01: Line 1, 10: Line 2)		Forward TX Setting 00: No forwarding 01: Forwarding + Always (print) 10: Forwarding + Only when not delivered (print) 11: Not defined		0x00	0x00	0x00	X0	05
Utility Mode (0,1,2,4,6,7)	0b0006	FAX reception automatic output setting	Two-sided recording	2in1 recording	Inched record-ing paper selec-tion	Fax Output Set-ting (only for color MFP) 0: Batch Print 1: Page Print NOTE In the case of B&W MFP, only "Batch Print" can be supported. Therefore, always set the value to "0".	Face-up output	Page division recording	Output tray HP 00:Tray 1 01:Tray 2 10:Tray 3 11:Tray 4		0x01	0x01	0x01	X0	06

Setting	Address	Item	Contents								Default			CSRC	
			bit7	bit6	bit5	bit4	bit3	bit2	bit1	bit0	Japan	North America	Europe	Com-mand	Parame-ter
Utility Mode (2-5) Utility Mode Special Setting (6,7)	0b0007	FAX reception automatic output setting 2	STOP is effected for printing during reception	STOP is effected for printing after reception	Inched paper priority	Paper tray fixing 000: Tray 1 001: Tray 2 010: Tray 3 011: Tray 4 100: LCT 101: Auto			LG is used.	LT is used.	0xd4	0xf4	0xd4	X0	07
Utility Mode (0,1)	0b0008	Setting of recording paper for reception	Selection without A5R 0: A4->B5 1: B5->A4 Only when all of the following conditions are met: A. Destination is "Japan" or "Europe". B. Fax reception print is set as follows: ["Split print ON" or "Split print OFF"] and [Paper tray/paper size is auto] C. "Letter/Ledger over A4/A3 OFF"						Paper select mode 00: APS 01: Recording paper designation mode 1 10: Recording paper designation mode 2		0x00	0x00	0x00	X0	08
Utility Mode	0b0009	Setting of recording paper size for reception				01000: A3R 01001: B4R 01111: A4 10001: 8.5×14R 11000: 11×17R 11111: 8.5×11					0x0f	0x1f	0x0f	X0	09
---	0b000a	Target reduction rate when A4/LTR is used									0x5a	0x5a	0x5a	X0	0A
---	0b000b	Other target reduction rate									0x5d	0x5d	0x5d	X0	0B
Utility Mode Special Setting (0)	0b000c	BOOT rewrite on FAX ISW								Boot area rewrite 0: No 1: Yes	0x00	0x00	0x00	X0	0C
---	0b000d	Reduction rate used in APS	Received image reduction rate at APS								0x5d	0x5d	0x5d	X0	0D
Utility Mode	0b000e	Minimum reduction rate	Received image reduction rate at APS (A3/B4 width)								0x60	0x60	0x60	X0	0E
Utility Mode (0-3)	0b000f	Incomplete TX hold	Debug mode 0: OFF 1: ON(3min)				File holding time 0000: 12 hours 0001: 24 hours 0010: 48 hours 0011: 72 hours				0x00	0x00	0x00	X0	0F
---	0b0010	Inter-station timer	HEX (unit: second)(00 - ffh)(00 means 03)								0x03	0x03	0x03	X0	10
	0b0012 - 0b0015	Reserved area									0xff	0xff	0xff	X0	12 - 15
Utility Mode (0-5)	0b0016	PC-FAX RX	TSI routing function 0: OFF 1: ON	At operation with PC-FAX Rx code unspecified 0: PC Reception 1: Print	PC-FAX Rx print 0: No 1: Yes		PC-FAX reception mode 000: OFF 001: ON + Received at fixed box 010: Dialin + Received at fixed box 011: ON + Received at specified box 100: Dialin + Reception at specified box			Password check 0: OFF 1: ON	0x10	0x10	0x10	X0	16

Setting	Address	Item	Contents								Default			CSRC	
			bit7	bit6	bit5	bit4	bit3	bit2	bit1	bit0	Japan	North America	Europe	Com-mand	Parame-ter
Utility Mode	0b0017 - 0b002a	PC-FAX reception password	ASCII 20 digits								ALL 0x20	ALL 0x20	ALL 0x20	X0	17 - 2A
Utility Mode (0-3)	0b002b	FAX reception automatic output setting 3					Output No. of copies Setting range:0 - (15)				0x01	0x01	0x01	X0	2B
Utility Mode (0)	0b002c	Setting for 2 lines	Line 2 transmission setting (00: Transmission/Reception, 01: Reception only, 10: Transmission only)		Default Ext/Out setting for PC-FAX transmis-sion (0: Out, 1: Extension)	Default Ext/Out setting for For-ward TX: (0: Out, 1: Extension)	Default Ext/Out setting (0: Out, 1: Extension)	Setting using Line 1 (0: Out, 1: Extension)	Setting using multiple lines (0: Normal, 1: Ext/Out)		0x00	0x00	0x00	X0	2C
Utility Mode (0-1)	0b002d	PC-FAX Setting							PC-FAX transmission line specifica-tion (00: Not specified, 01: Line 1, 10: Line 2, 11: Reserved)		0x00	0x00	0x00	X0	2D
Utility Mode (0)	0b0032	I-Fax encoding system capability (default for auto transmission capability)						000: (Setting prohibited) 001: MH 010: MR/MH 100: MMR/MR/MH			0x04	0x04	0x04	X0	32
Utility Mode (0-3)	0b0039	communication function	Interception of 1-address trans-mission in broadcasting transmission (0: Permitted, 1: Prohibited)	ITI printing, unit ID preference function (0: Not pre-ferred, 1: Preferred)	Dial number duplication check during broadcasting transmission 0: Checked 1: Not checked	F code transmis-sion function 0: No 1: Yes	Abandoning error pages dur-ing transmission 0: Not aban-doned 1: Abandoned	Incomplete TX hold function 0: Yes 1: No	Relay reception function 0: Yes 1: No	Confidential reception func-tion 0: Yes 1: No	0x44	0x44	0x44	X0	39
Utility Mode Service Mode	0b003a - 0b0067	Character ID [46]	ASCII [46] When ID is less than 46 digits, justify to the left and insert space at the top. (With NULL terminators)								ALL 0x00	ALL 0x00	ALL 0x00	X0	3A - 67
Utility Mode (0)	0b0068	Reception refuse								Call acceptance rejected - Num-ber display 0: Disconnected line 1: No response	0x00	0x00	0x00	X0	68
Utility Mode	0b0069	Recording paper priority selection							00: Automatic selection 01: Fixed size 10: Priority					X0	69
Utility Mode	0b006a	Box number error operation				Print or not print the images received when the TSI transfer terminates nor-mally. 0:OFF 1:ON	Operation with no routing regis-tration or no reg-istered BOX upon the TSI routing turned ON (0: Print output, 1: Saved in forced memory reception BOX)	Reception of unregistered box sub No. 00: Print 01: Main line 10: Sub line			0x00	0x00	0x00	X0	6A
Utility Mode	0b006b	Transmission line specification							Transmission line specification 00: Not specified, 01: Main line, 10: Sub line		0x00	0x00	0x00	X0	6B

Setting	Address	Item	Contents								Default			CSRC	
			bit7	bit6	bit5	bit4	bit3	bit2	bit1	bit0	Japan	North America	Europe	Com-mand	Parame-ter
Utility Mode	0b006c	Reserved area									0x00	0x00	0x00	X0	6C

Setting	Address	Item	Contents								Default			CSRC	
			bit7	bit6	bit5	bit4	bit3	bit2	bit1	bit0	Japan	North America	Europe	Com-mand	Parame-ter
---	0e0000	Error line processing/judgment	RTP transmission		Error line recirculation	Addition of error sign		Judgment of No. of sequential error lines	Error line rate judgment	Judgment of No. of error lines	0x01	0x01	0x01	X1	00
---	0e0001	No. of error lines-very good	No. of very good judgment lines (HEX) No. of error linesVeryGoodErrorNum, MCF is transmitted.								0x10	0x10	0x10	X1	01
---	0e0002	No. of error lines-good	No. of good judgment error lines (HEX) VeryGoodErrorNum<No. of error linesGoodErrorNum, RTP is transmitted								0x40	0x40	0x40	X1	02
---	0e0003	No. of error lines-bad	No. of bad judgment error lines (HEX) GoodErrorNum<No. of error lines BadErrorNum, RTN is transmitted. No. of error lines>BadErrorNum, it is considered to be error line over.								0x80	0x80	0x80	X1	03
---	0e0004	Rate of error lines-very good	Rate of very good judgment error lines (HEX, %) Rate of error linesVeryGoodErrorPercent, MCF is transmitted.								0x05	0x05	0x05	X1	04
---	0e0005	Rate of error lines-good	Rate of good judgment error lines (HEX, %) VeryGoodErrorPercent<Rate of error linesGoodErrorPercent, RTP is transmitted. Rate of error lines>GoodErrorPercent, RTN is transmitted.								0x0a	0x0a	0x0a	X1	05
---	0e0006	No. of continuous error lines-bad	No. of bad judgment sequential error lines (HEX) Normal No. of sequential error linesErrorContNormal, MCF is transmitted. No. of sequential error lines>ErrorContNormal, RTN is transmitted.								0x03	0x03	0x03	X1	06
---	0e0007	No. of continuous error lines-bad	No. of bad judgment sequential error lines (HEX) Fine No. of sequential error linesErrorContNormal, MCF is transmitted. No. of sequential error lines>ErrorContNormal, RTN is transmitted.								0x06	0x06	0x06	X1	07
---	0e0008	No. of continuous error lines-bad	No. of bad judgment sequential error lines (HEX) 300dpi No. of sequential error linesErrorContNormal, MCF is transmitted. No. of sequential error lines>ErrorContNormal, RTN is transmitted.								0x09	0x09	0x09	X1	08
---	0e0009	No. of continuous error lines-bad	No. of bad judgment sequential error lines (HEX) Super fine No. of sequential error linesErrorContNormal, MCF is transmitted. No. of sequential error lines>ErrorContNormal, RTN is transmitted.								0x0c	0x0c	0x0c	X1	09
---	0e000a	EP tone addition						V.17	V.33	V.29	0x06	0x06	0x06	X1	0A
---	0e000b	CED detection-transmission frequency							CED detection 0: Detect 1: Not detect	CED transmis-sion frequency 0: 2100Hz 1: 1100Hz	0x00	0x00	0x00	X1	0B
---	0e000c	TSI/CSI/CIG parameter	TSI transmission 0: No 1: Always	CSI transmis-sion 0: No 1: Always	CIG transmis-sion 0: No 1: Always					Character ID is put on CSI.	0xe0	0xe0	0xe0	X1	0C

bizhub 423/363/283/223

Setting	Address	Item	Contents								Default			CSRC	
			bit7	bit6	bit5	bit4	bit3	bit2	bit1	bit0	Japan	North America	Europe	Com-mand	Parame-ter
---	0e000d	G3ModeError	Ph-C8 min. limit timer at Non-ECM 0: No 1: Yes	Selection of "-" at dial top 0: OFF 1: ON	RTN reception 0: step down 1: Line disconnect.	Remote recep-tion ID received 1: No limit	DIS retransmis-sion interval in manual recep-tion 0: 4.5 sec. 1: 3.0 sec.	DCN transmission at T200	DIS length at reception limited to 4byte 0: No limit 1: Limit	DCN transmit-ted at stop of ph.C	0x00	0x00	0x00	X1	0D
---	0e000e	Step up/down	Strict TCF check 0: Normal 1: Strict check							The PC/BC of the PostMsg is checked while in the ECM recep-tion. 0: Yes 1: No	0x00	0x00	0x00	X1	0E
---	0e000f	Delay timer between DCS-TCF	DCS - TCF delay timer Unit: (10 ms, HEX)								0x08	0x08	0x08	X1	0F
---	0e0010	Delay timer between PIX-PMC	PIX - PMC delay timer Unit: (10 ms, HEX)								0x08	0x08	0x08	X1	10
---	0e0011	Delay timer between CED-DIS	CED - DIS delay timer (Unit: 10 ms, HEX)								0x08	0x08	0x08	X1	11
---	0e0012	T1 timer for calling	T1 timer for transmission (Unit: 1sec, HEX)								0x23	0x23	0x23	X1	12
---	0e0013	T1 timer for called	T1 timer for reception (Unit: 1 sec, HEX)								0x23	0x23	0x23	X1	13
---	0e0014	ph.C reception limited time	Max. reception time per page (Unit: min, HEX) 1 to 255 min.								0x0f	0x0f	0x0f	X1	14
---	0e0015	Timer between EOLs	EOL - EOL timer (Unit: 100 ms, HEX)								0x82	0x82	0x82	X1	15
---	0e0016	Timer between frames	Timer between frames (Unit: 1 sec, HEX)								0x23	0x23	0x23	X1	16
---	0e0017	ANSam signal transmission time	ANSam signal transmission time (Unit: 100 ms, HEX)								0x28	0x28	0x28	X1	17
---	0e0018	Ci signal transmission time	Ci signal transmission time (Unit: 100 ms, HEX)								0x05	0x05	0x05	X1	18
---	0e0019	High-speed signal transmission waiting delay timer	High-speed signal transmission waiting delay timer (Unit: 10 ms, HEX) (Between CFR-PIX/MPS-PIX/CTR-PIX)								0x37	0x37	0x37	X1	19
---	0e001a	ph.C top dummy data transmitting time	ph.C top dummy data transmission time (Unit: 100 ms, HEX) (Dummy data for non-ECM /Preamble at ECM)								0x04	0x04	0x04	X1	1A
---	0e001b	RTC Counter						The EOL counter judged to be RTC 000: EOL*2 001: EOL*3 010: EOL*4 011: EOL*5 100: EOL*6			0x01	0x01	0x01	X1	1B
---	0e001c	Closed area communication						Polling TX	Polling RX		0x00	0x00	0x00	X1	1C
---	0e001d - 0e0030	Machine password [20]	ASCII [20] When ID is less than 20 digits, justify to the left and insert space at the top. (No NULL terminators)								ALL 0x20	ALL 0x20	ALL 0x20	X1	1D - 30
---	0e0031 - 0e0044	CSRC password [20]	ASCII [20] When ID is less than 20 digits, justify to the left and insert space at the top. (No NULL terminators)								ALL 0x20	ALL 0x20	ALL 0x20	X1	31 - 44
---	0e0045	Watch dog								Watch dog 0: OFF 1: ON	0x01	0x01	0x01	X1	45
---	0e0046	T2 timer after CFR	T2 timer value after CFR x100ms (HEX)								0x3c	0x3c	0x3c	X1	46
---	0e0047	T2 timer after EOM	T2 timer after EOM x100ms (HEX)								0x37	0x37	0x37	X1	47
---	0e0048	JIM waiting timer	JM waiting timer value x100ms (HEX)								0x5A	0x5A	0x5A	X1	48

Setting	Address	Item	Contents								Default			CSRC	
			bit7	bit6	bit5	bit4	bit3	bit2	bit1	bit0	Japan	North America	Europe	Com-mand	Parame-ter
---	0e0049	Destination	0: US 1: Canada 10: Netherlands 19: Spain 27: Singapore 34: Philippines	2: Japan 11: Belgium 20: Portugal 28: Korea 35: Russia	3: Australia 12: Austria 21: Poland 29: Hong Kong	4: New Zealand 13: Norway 22: South Africa 30: General purpose (OT)	5: Europe 14: Sweden 23: Taiwan	6: Germany 15: Finland 24: Saudi Arabia 31: Argentina	7: UK 16: Ireland	8: France 9: Switzerland 17: Denmark 18: Italy 25: China 26: Malaysia 32: Brazil 33: Vietnam	0x02	0x00	0x05	X1	49
---	0e004a	Function when DIS signal is created							Change-over of the silent interval between ANSam and DIS (For revision T.30) 0: Silent interval of 450 ms 1: 75 ms	V8 capability, if available, of DIS to transmit with V.21 0: V8bitON 1: V8bitOFF	0x01	0x01	0x01	X1	4A
---	0e004b	Signal check at the time of F code communication								Check of PWD and SID received signal in F code com-munication 0: Signal checked 1: PWD and SID not distinguished	0x00	0x00	0x00	X1	4B
---	0e004c	No. of CI signal transmission in manual transmission	CI signal repetitive transmission frequency when no ANSam received after CI transmission (times, HEX)								0x03	0x03	0x03	X1	4C
---	0e004d	Tone detection time (PB)	PB OFF time integration 0 to 15 (x10ms) (50ms if 0)				PB ON time integration 0 to 15 (x10ms) (50ms if 0)				0x55	0x55	0x55	X1	4D
---	0e004e	Time for modem response waiting timeout	Waiting event from modem/Response waiting timeout time (x10sec, HEX) (0 counted as 90 sec.)								0x00	0x00	0x00	X1	4E
---	0e004f	Continuous CRP reception frequency resulting in an error	Sequential CRP reception frequency resulting in error (x1 time, HEX) (0 counted as 3 times)								0x00	0x00	0x00	X1	4F
---	0e0050	1300Hz line seizure parameter detection time	1300Hz tone detection time for no-ringing reception (x100ms, HEX)								0x17	0x17	0x17	X1	50
---	0e0051	1300Hz line seizure parameter detection frequency upper limit	1300Hz tone detection frequency upper limit for no-ringing reception (x10Hz, HEX)								0x85	0x85	0x85	X1	51
---	0e0052	1300Hz line seizure parameter detection frequency lower limit	1300Hz tone detection frequency lower limit for no-ringing reception (x10Hz, HEX)								0x7f	0x7f	0x7f	X1	52
---	0e0053	German specifications					ERR transmission (DTS sequence)	DCN reception error ignored	Line discon-nected within 6 sec. after CD OFF in ph.C	Line discon-nected upon reception of DIS to DTC	0x00	0x00	0x00	X1	53
---	0e0054	Retransmission intervals of DIS (Auto reception)	DIS re-transmission interval in automatic reception (x0.1 sec.)								0x1e	0x1e	0x1e	X1	54
---	0e0055	TTI for transmission							TTI in transmission TTI added 00: OFF 01: (OFF) 10: INSIDE 11: OUTSIDE		0x03	0x03	0x03	X1	55

Setting	Address	Item	Contents								Default			CSRC	
			bit7	bit6	bit5	bit4	bit3	bit2	bit1	bit0	Japan	North America	Europe	Com-mand	Parame-ter
---	0e0056	Image reduction parameter								Reduction parameter in main scanning direction 0: Thick line kept 1: Thick line not kept	0x00	0x00	0x00	X1	56
---	0e0057	Main body polling transmission command wait timer	Timer for waiting a transmission command (+FDT) from the main body during turnaround of polling transmission (x100ms, HEX) (0 is defaulted to 8 sec.)								0x08	0x08	0x08	X1	57
---	0e0058 -	Reserved area									ALL 0x00	ALL 0x00	ALL 0x00	X1	58 -

- For main line

Setting	Address	Item	Contents								Default			CSRC	
			bit7	bit6	bit5	bit4	bit3	bit2	bit1	bit0	Japan	North America	Europe	Com-mand	Parame-ter
---	0e0090	Transmission ATT	Tone signal/FSK transmission ATT (HEX) every 1 dBm (0 to -15dBm)				High-speed signal transmission ATT (HEX) every 1 dBm (0 to -15dBm)				0xAA	0xAA	0xAA	XB	00
---	0e0091	CED transmission ATT					CED/ANS transmission ATT (HEX) every 1 dBm (0 to -15dBm)				0x0A	0x0A	0x0A	XB	01
---	0e0092	CD/SED ON level							CD/SED ON level [dBm] 00: -33 01: -38 10: -43 11: -48		0x03	0x03	0x03	XB	02
---	0e0093	Transmission cable amplitude EQL			Transmission cable EQL 00: 0dB 01: 4dB 10: 8dB 11: 12dB						0x00	0x00	0x00	XB	03
---	0e0094	Reception cable amplitude EQL			Reception cable EQL 00: 0dB 01: 4dB 10: 8dB 11: 12dB						0x00	0x00	0x00	XB	04
---	0e0095	Tel-Fax switching	Time from vocal response to RBT transmission (CNG detection waiting time 2) 0: 4 sec. 1: 2 sec.	Time from reception to voice response transmission (CNG detection waiting time 1) 0: 2 sec. 1: 4 sec.	TEL/FAX switch-ing mode 0: Disabled 1: Enabled	External tele-phone no ring-ing setting 0: Disabled 1: Enabled (disconnected)	TEL/FAX switch-ing ON response details 0: Voice response + RBT transmission 1: RBT transmis-sion only				0x00	0x00	0x00	XB	05
---	0e0096	Ring Back Tone parameter	RBT format 000: None 001: Japan 010: US 011: UK 100: Germany 101 to 111: Others			CED transmit-ted upon Tel/Fax switching	RBT transmission level (HEX)0 to -15 dBm				0x2A	0x4A	0x68	XB	06
---	0e0097	International com mode operation	DIS waiting fre-quency 0: Always 1 time 1: Twice in over-seas communi-cation	Overseas com-munication 0: No 1: Yes							0x40	0x40	0x40	XB	07
---	0e0098	Starting speed in international mode (V29 modem)				9600bps/V.29	7200bps/V.29		4800bps/V.27ter	2400bps/V.27ter	0x02	0x02	0x02	XB	08

Setting	Address	Item	Contents								Default			CSRC	
			bit7	bit6	bit5	bit4	bit3	bit2	bit1	bit0	Japan	North America	Europe	Com-mand	Parame-ter
---	0e0099	Starting speed in international mode (V17 or V33 modem)	14400bps/V.17	12000bps/V.17	9600bps/V.17	7200bps/V.17					0x10	0x10	0x10	XB	09
---	0e009a	Starting speed in international mode (V34)	33600bps/V.34	31200bps/V.34	28800bps/V.34	26400bps/V.34	24000bps/V.34	21600bps/V.34	19200bps/V.34	16800bps/V.34	0x20	0x20	0x20	XB	0A
---	0e009b	CD OFF timer	CD OFF timer (Unit: 100 ms, HEX)								0x14	0x14	0x14	XB	0B
---	0e009c	CD ON integration time	CD ON integration time (Unit: 100 ms. HEX)								0x06	0x06	0x06	XB	0C
---	0e009d	Symbol rate maximum allowable value	V34 controlled ch data rate 0: 1200 1: 2400				Max. allowable symbol speed 0000: 2400 0001: Reserved 0010: 2800 0011: 3000 0100: 3200 0101: 3429				0x05	0x05	0x05	XB	0D
---	0e009e	Symbol rate selection criteria	Attenuation distortion property (-6dB to +6dB) 0000:-6 0001:-5 0010:-4 0011:-3 0100:-2 0101:-1 0110:0 0111:+1 1000:+2 1001:+3 1010:+4 1011:+5 1100:+6				Band end S/N (-6dB to +6dB) 0000:-6 0001:-5 0010:-4 0011:-3 0100:-2 0101:-1 0110:0 0111:+1 1000:+2 1001:+3 1010:+4 1011:+5 1100:+6				0x66	0x66	0x66	XB	0E
---	0e009f	Primary channel data rate selection criteria	V.34 reception gain correction (-4.0dB to +3.5dB) 0000:0 0001:+0.5 0010:+1.0 0011:+1.5 0100:+2.0 0101:+2.5 0110:+3.0 0111:+3.5 1000:-4.0 1001:-3.5 1010:-3.0 1011:-2.5 1100:-2.0 1101:-1.5 1110:-1.0 1111:-0.5				Primary channel data rate selection criteria (-8dB to +7dB) 0000:-8 0001:-7 0010:-6 0011:-5 0100:-4 0101:-3 0110:-2 0111:-1 1000:0 1001:+1 1010:+2 1011:+3 1100:+4 1101:+5 1110:+6 1111:+7				0x08	0x08	0x08	XB	0F
---	0e00a0	V34 primary channel fallback	No. of frame errors subjected to fallback (HEX)								0x03	0x03	0x03	XB	10
---	0e00a1	V34 control channel fallback	EQMVAL value for fallback (HEX)								0x40	0x40	0x40	XB	11
---	0e00a2	V34 off Rx-V34 off time after error	Timer value after V34 reception error used to reset V34 off reception (min, HEX) (Valid only when transmission side cannot be specified)								0x0a	0x0a	0x0a	XB	12
---	0e00a3	V34 off Rx-V17 OK Rx times to reset V34 off Rx	No. of continuous success of V17 receptions used to reset V34 off reception after V34 reception error (times, HEX) (Valid only when transmission side can be specified with Caller ID)								0x0a	0x0a	0x0a	XB	13
---	0e00a4	(Inhibit of) V34 off Rx-Function ON/OFF	V34off function for manual reception 0: Enable 1: Disable						V.34 OFF reset mode = No. of successful con-secutive V.17 reception times (ID specified) 0: Enabled 1: Disabled	V.34 OFF reset mode = time (ID cannot be speci-fied) 0: Enabled 1: Disabled	0x00	0x02	0x02	XB	14
---	0e00a5	JBIG parameter							Use of following FP JBIG option LO size at reduction 0: No, 1: Yes	JBIG optional L0 capacity 0: No, 1: Yes	0x01	0x01	0x01	XB	15
---	0e00a6 - 0e00a9	JBIG LO size	JBIG optional LO size used for reduction (HEX) (setting range:0x01to0xffffffff) [0] = HH, [1] = HL, [2] = LH, [3] = LL								0x00 0x00 0x00 0x80	0x00 0x00 0x00 0x80	0x00 0x00 0x00 0x80	XB	16 - 19
---	0e00aa	(Inhibit of) JBIG off Rx-Function ON/OFF							JBIG off func-tion at A3 high-definition recep-tion (DIS re-transmission) 0: OFF, 1: ON	JBIG off func-tion after JBIG reception error 0: Enable 1: Disable	0x00	0x00	0x00	XB	1A
---	0e00ab	JBIG off Rx-JBIG off time after error	Timer value after JBIG reception error to reset JBIG off reception (min, HEX)(10 min. if 0)								0x0a	0x0a	0x0a	XB	1B

Setting	Address	Item	Contents								Default			CSRC	
			bit7	bit6	bit5	bit4	bit3	bit2	bit1	bit0	Japan	North America	Europe	Com-mand	Parame-ter
---	0e00ac	PBX dial tone detection frequency upper limits	PBX dial tone detection frequency upper limit (unit: 10 Hz, HEX)								0x31	0x00	0x00	XB	1C
---	0e00ad	PBX dial tone detection frequency lower limits	PBX dial tone detection frequency lower limit (unit: 10 Hz, HEX)								0x1f	0x00	0x00	XB	1D
---	0e00ae	PBX dial tone detection time	PBX dial tone detection time or max. ON time value (unit: 20 ms, HEX)								0x32	0x00	0x00	XB	1E
---	0e00af	PBX dial tone ON time min. value	PBX dial tone ON time min. value (unit: 20ms, HEX)								0x00	0x00	0x00	XB	1F
---	0e00b0	PBX dial tone OFF time max. value	PBX dial tone OFF time max. value (unit: 20 ms, HEX)								0x00	0x00	0x00	XB	20
---	0e00b1	PBX dial tone OFF time min. value	PBX dial tone OFF time min. value (unit: 20 ms, HEX)								0x00	0x00	0x00	XB	21
---	0e00b2	PBX dial tone waiting time	PBX dial tone waiting time or pre-pause time (unit: 1 sec, HEX)								0x03	0x03	0x03	XB	22
---	0e00b3	PBX dial tone instantaneous break detec-tion time	Instantaneous shutdown time (unit: 20 ms, HEX) or tone detection frequency (times, HEX)								0x00	0x00	0x00	XB	23
---	0e00b4	1st dial tone detection frequency upper limits	1st dial tone detection frequency upper limit (unit: 10 Hz, HEX)								0x31	0x35	0x34	XB	24
---	0e00b5	1st dial tone detection frequency lower lim-its	1st dial tone detection frequency lower limit (unit: 10 Hz, HEX)								0x1f	0x23	0x1c	XB	25
---	0e00b6	1st dial tone detection time	1st dial tone detection time or ON time max. value (unit: 20 ms, HEX)								0x32	0x32	0x1a	XB	26
---	0e00b7	1st dial tone ON time min. value	1st dial tone ON time min. value (unit: 20 ms, HEX)								0x00	0x00	0x00	XB	27
---	0e00b8	1st dial tone OFF time max. value	1st dial tone OFF time max. value (unit: 20 ms, HEX)								0x00	0x00	0x00	XB	28
---	0e00b9	1st dial tone OFF time min. value	1st dial tone OFF time min. value (unit: 20 ms, HEX)								0x00	0x00	0x00	XB	29
---	0e00ba	1st dial tone waiting time	1st dial tone waiting time or pre-pause time (unit: 1 sec, HEX)								0x03	0x03	0x04	XB	2A
---	0e00bb	1st dial tone instantaneous break detection time	Instantaneous shutdown detection time (unit: 20 ms, HEX) or tone detection frequency (times, HEX)								0x00	0x00	0x05	XB	2B
---	0e00bc	2nd dial tone detection frequency upper limits	2nd dial tone detection frequency upper limit (unit: 10 Hz, HEX)								0x31	0x00	0x00	XB	2C
---	0e00bd	2nd dial tone detection frequency lower limits	2nd dial tone detection frequency lower limit (unit: 10 Hz, HEX)								0x1f	0x00	0x00	XB	2D
---	0e00be	2nd dial tone detection time	2nd dial tone detection time or ON time max. value (unit: 20 ms, HEX)								0x08	0x00	0x00	XB	2E
---	0e00bf	2nd dial tone ON time min. value	2nd dial tone ON time min. value (20 ms, HEX)								0x02	0x00	0x00	XB	2F
---	0e00c0	2nd dial tone OFF time max. value	2nd dial tone OFF time max. value (unit: 20 ms, HEX)								0x0a	0x00	0x00	XB	30
---	0e00c1	2nd dial tone OFF time min. value	2nd dial tone OFF time min. value (20 ms, HEX)								0x04	0x00	0x00	XB	31
---	0e00c2	2nd dial tone waiting time	2nd dial tone waiting time or pre-pause time (unit: 1 sec, HEX)								0x03	0x03	0x03	XB	32
---	0e00c3	2nd dial tone instantaneous break detec-tion time	Instantaneous shutdown detection time (unit: 20 ms, HEX) or tone detection frequency (times, HEX)								0x03	0x00	0x00	XB	33
---	0e00c4	3rd dial tone detection frequency upper limits	3rd dial tone detection frequency upper limit (unit: 10 Hz, HEX)								0x00	0x00	0x00	XB	34
---	0e00c5	3rd dial tone detection frequency lower limits	3rd dial tone detection frequency lower limit (unit: 10 Hz, HEX)								0x00	0x00	0x00	XB	35

Setting	Address	Item	Contents								Default			CSRC	
			bit7	bit6	bit5	bit4	bit3	bit2	bit1	bit0	Japan	North America	Europe	Com-mand	Parame-ter
---	0e00c6	Busy tone detection frequency upper limits	Detection frequency upper limit (unit: 10 Hz, HEX)								0x31	0x00	0x00	XB	36
---	0e00c7	Busy tone detection frequency lower limits	Detection frequency lower limit (unit: 10 Hz, HEX)								0x1f	0x00	0x00	XB	37
---	0e00c8	Busy tone ON time max. value	Busy tone ON time max. value (unit: 20 ms, HEX)								0x1e	0x00	0x00	XB	38
---	0e00c9	Busy tone ON time min. value	Busy tone ON time min. value (unit: 20 ms, HEX)								0x14	0x00	0x00	XB	39
---	0e00ca	Busy tone OFF time max. value	Busy tone OFF time max. value (unit: 20 ms, HEX)								0x1e	0x00	0x00	XB	3A
---	0e00cb	Busy tone OFF time min. value	Busy tone OFF time min. value (unit: 20 ms, HEX)								0x14	0x00	0x00	XB	3B
---	0e00cc	Ringer detection frequency upper limits	Ringer detection frequency upper limit (unit: 1 Hz, HEX)								0x46	0x46	0x46	XB	3C
---	0e00cd	Ringer detection frequency lower limits	Ringer detection frequency lower limit (unit: 1 Hz, HEX)								0x0c	0x0c	0x0c	XB	3D
---	0e00ce	Ringer ON time max. value	Ringer ON time max. value (unit: 20 ms, HEX)								0x00	0x00	0x00	XB	3E
---	0e00cf	Ringer ON time min. value	Ringer ON time min. value (unit: 20 ms, HEX)								0x0a	0x0a	0x08	XB	3F
---	0e00d0	Ringer OFF time max. value	Ringer OFF time max. value (unit: 100 ms, HEX)								0x3c	0x3c	0x46	XB	40
---	0e00d1	Ringer OFF time max. value	Ringer OFF time min. value (unit: 100 ms, HEX)								0x02	0x00	0x00	XB	41
---	0e00d2	PB dial signal transmission time	PB dial signal transmission time (unit: 5 ms, HEX)								0x15	0x19	0x15	XB	42
---	0e00d3	PB dial inter digit pause	PB dial inter digit pause time (unit: 5 ms, HEX)								0x11	0x15	0x11	XB	43
---	0e00d4	10pps pulse dial break rate	10pps pulse dial break rate (%, HEX)								0x44	0x3d	0x3d	XB	44
---	0e00d5	10pps pulse dial inter digit pause	10pps pulse dial inter digit pause (unit: 10 ms, HEX)								0x68	0x68	0x5e	XB	45
---	0e00d6	20pps pulse dial break rate	20pps pulse dial brake rate (%, HEX)								0x44	0x3d	0x3d	XB	46
---	0e00d7	20pps pulse dial inter digit pause	20pps pulse dial inter digit pause (unit: 10 ms, HEX)								0x59	0x40	0x5c	XB	47
---	0e00d8	PB signal transmission level	PB signal transmission level (unit: 1 dBm, HEX)								0x0a	0x0a	0x06	XB	48
---	0e00d9	PB signal level difference (HL)	PB level difference (HL) (unit: 0.5 dBm, HEX)								0x04	0x04	0x04	XB	49
---	0e00da	DcLoop integration time when CML is set to OFF	DCLOOP integration time at CML relay OFF (unit: 5 ms, HEX) (Lower limit 20 ms)								0x50	0x50	0x50	XB	4A
---	0e00db	DcLoop integration time when CML is set to ON	DCLOOP integration time at CML relay ON (unit: 5 ms, HEX) (Lower limit 20 ms)								0x10	0x10	0x10	XB	4B
---	0e00dc	Pause time						Pause time (unit: sec, HEX)			0x01	0x01	0x01	XB	4C
---	0e00dd	DCLOOP check mode	DC-LOOP check 0: No 1: Always								0x00	0x00	0x00	XB	4D
---	0e00de	DCLOOP waiting time	DCLOOP waiting time (unit: 100 ms, HEX)								0x00	0x00	0x00	XB	4E
---	0e00df	DCLOOP instantaneous shutdown allowed time (ph.A)	DCLOOP instantaneous shutdown allowable time (unit: 10 ms, HEX) (at the time of calling, CML ON to end of dialing)								0x00	0x00	0x00	XB	4F
---	0e00e0	DCLOOP instantaneous shutdown allowed time (ph.B)	DCLOOP instantaneous shutdown allowable time (unit: 10ms, HEX) (after completion of dialing and after CML ON at the time of reception)								0x00	0x00	0x00	XB	50
---	0e00e1	Dial mode RING DET mode			RING detection mode 01: No. of times 10: TIme		Pulse format 00: General 01: SW 10: NO		Dialing method 00: PB 01: 10pps 10: 20pps 11: 16pps		0x12	0x10	0x10	XB	51

bizhub 423/363/283/223

Setting	Address	Item	Contents								Default			CSRC	
			bit7	bit6	bit5	bit4	bit3	bit2	bit1	bit0	Japan	North America	Europe	Com-mand	Parame-ter
---	0e00e2	1st/2nd DT detection parameter					At 2nd DT detec-tion DP dialing only			1st DT2 type	0x00	0x00	0x00	XB	52
---	0e00e3	Tone detection			1300Hz 0: No 1: Yes	BusyTone 0: No 1: Yes Busy Tone detection is fixed to ON during TEL/FAX selec-tion.	PBX DT 0: No 1: Yes	3rd DT 0: No 1: Yes	2nd DT 0: No 1: Yes	1st DT 0: No 1: Yes	0x11	0x01	0x01	XB	53
---	0e00e4	No. of busy tone detection	Busy tone detection frequency (HEX)								0x02	0x00	0x00	XB	54
---	0e00e5	No. of RING detection	Ring detection frequency (times, HEX)								0x02	0x02	0x02	XB	55
---	0e00e6	RING detection time	Ring detection time (sec, HEX)								0x06	0x06	0x06	XB	56
---	0e00e7	Time to wait for a response from a remote station	Time waiting response from remote station after calling (unit: sec, HEX)								0x37	0x37	0x37	XB	57
---	0e00e8	Answering machine function	Answering machine CNG detection time (unit: 10sec, HEX) (1 - 7)			Answer mode 0: OFF 1: ON	Answering machine DCLOOP detection time (unit: 5sec, HEX) (1 - 15)				0x64	0x64	0x64	XB	58
---	0e00e9 - 0e00ea	Remote reception password	ASCII [2]								0x2a 0x20	0x2a 0x20	0x2a 0x20	XB	59 - 5A
---	0e00eb	RBT transmission time	RingBackTone signal transmission time (unit: 1000 ms, HEX)								0x14	0x14	0x14	XB	5B
---	0e00ec	CAR signal ON time max. value	CAR ON time max. value (unit: 20 ms, HEX)								0x28	0x00	0x00	XB	5C
---	0e00ed	CAR signal ON time min. value	CAR ON time min. value (unit: 20 ms, HEX)								0x0a	0x00	0x00	XB	5D
---	0e00ee	CAR signal OFF time max. value	CAR OFF time max. value (unit: 20 ms, HEX)								0x28	0x00	0x00	XB	5E
---	0e00ef	CAR signal OFF time min. value	CAR OFF time min. value (unit: 20 ms, HEX)								0x0a	0x00	0x00	XB	5F
---	0e00f0	CAR signal detection frequency	CAR (information receiving terminal start signal) detection frequency (times, HEX)								0x01	0x00	0x00	XB	60
---	0e00f1	Caller ID signal waiting time	ID waiting time after Caller ID/DIAL IN primary response (unit 1000 ms, HEX)								0x05	0x00	0x00	XB	61
---	0e00f2	Remote reception password entry waiting time	Password signal (DTMF) detection waiting time (unit: 100 ms, HEX)								0x14	0x14	0x14	XB	62
---	0e00f3	Normal/number display automatic line determination function	Automatic judg-ment function 0: OFF 1: ON				V23 signal detection waiting time when judged (x1 sec, HEX)				0x83	0x00	0x00	XB	63
---	0e00f4	Monitor speaker (Transmission signal sound)	PB tone monitor-ing at the time of off-hook	Monitor speaker in communication 00: OFF 11: ON		Speaker volume (HEX)(0-1F)					0x0A	0x0A	0x0A	XB	64
---	0e00f5 - 0e0108	Numeric ID [20]	ASCII [20] When ID is less than 20 digits, justify to the left and insert space at the top (no NULL terminator).								ALL 0x20	ALL 0x20	ALL 0x20	XB	65 - 78
---	0e0109	PBX connection mode					PBX call 0000 - 1001: keypad 1011: Reserved 1100: Reserved 1101: Reserved 1110: Reserved 1111: PBX unconnected				0x0f	0x0f	0x0f	XB	79

Setting	Address	Item	Contents								Default			CSRC	
			bit7	bit6	bit5	bit4	bit3	bit2	bit1	bit0	Japan	North America	Europe	Com-mand	Parame-ter
---	0e010a	Protocol monitor			TEL/FAX switch-ing RBT monitor sound 0: OFF 1: ON	Inhibit the speaker to sound when off-hook button is pressed 1: Inhibit 0: Not inhibit					0x00	0x00	0x00	XB	7A
---	0e010b	Reception function (disable)			Name display 0: Not inhibit 1: Inhibit	Compulsory Memory RX 0: Not inhibit 1: Inhibit	No. of caller / name display (number display / (display of sub-scribers for trace-back sys-tem)) 0: Not inhibit 1: Inhibit	Closed-area communication 0: Not inhibit 1: Inhibit	Remote RX 0: Not inhibit 1: Inhibit	DialIn 0: Not inhibit 1: Inhibit	0x3f	0x3f	0x3f	XB	7B
---	0e010c	PBX outside line access code 1 (BCD)	1st digit				2nd digit				0xff	0xff	0xff	XB	7C
---	0e010d	PBX outside line access code 2 (BCD)	3rd digit				4th digit				0xff	0xff	0xff	XB	7D
---	0e010e	Limit of long size reception								Limit of long size reception 0: Limit 1: Unlimited	0x00	0x00	0x00	XB	7E
---	0e010f	Max. size of long original received (In the case of 400 dpi or less)	When the resolution for reception is 400 dpi or less, the size of a long original received that is regarded as an error (The maximum size is a decimal value x 10 mm. 0 is regarded as 1000 mm.)								0x64	0x64	0x64	XB	7F
---	0e0110	Max. size of long original received (In the case of 600 dpi or less)	When the resolution for reception is 600 dpi, the size of a long original received that is regarded as an error (The maximum length is a decimal value x 10 mm. 0 is regarded as the same as a value less than 400 dpi above.)								0x64	0x64	0x64	XB	80
---	0e0111	Voice response output level adjustment					Voice response volume (HEX) 0000: min - 1111: max				0x0E	0x0E	0x0E	XB	81
---	0e0112	Monitor speaker (Received signal sound)				Speaker volume (HEX) (0-1F)					0x14	0x14	0x14	XB	82
---	0e0113 - 0e011d	Reserved area									ALL 0x00	ALL 0x00	ALL 0x00	XB	83 - 8D
---	0e011e	External phone off hook determination threshold value	External phone off hook determination threshold value current (unit: 1 mA, HEX)								0x00	0x00	0x00	XB	8E

- For sub line

Setting	Address	Item	Contents								Default			CSRC	
			bit7	bit6	bit5	bit4	bit3	bit2	bit1	bit0	Japan	North America	Europe	Com-mand	Parame-ter
---	0e01a0	Transmission ATT	Tone signal/FSK transmission ATT (HEX) 1 dBm every (0 - -15dBm)				High-speed signal transmission ATT (HEX) 1 dBm every (0 - -15dBm)				0xAA	0xAA	0xAA	XC	00
---	0e01a1	CED Transmission ATT					CED/ANS transmission ATT (HEX) 1 dBm every (0 - -15dBm)				0x0A	0x0A	0x0A	XC	01
---	0e01a2	CD/SED ON level							CD/SED ON level [dBm] 00: -33, 01: -38, 10: -43, 11: -48		0x03	0x03	0x03	XC	02
---	0e01a3	Transmission cable amplitude EQL			Transmission cable EQL0 00: 0dB, 01: 4dB, 10: 8dB, 11: 12dB						0x00	0x00	0x00	XC	03

Setting	Address	Item	Contents								Default			CSRC	
			bit7	bit6	bit5	bit4	bit3	bit2	bit1	bit0	Japan	North America	Europe	Com-mand	Parame-ter
---	0e01a4	Reception cable amplitude EQL			Reception cable EQL 00: 0dB, 01: 4dB, 10: 8dB, 11: 12dB						0x00	0x00	0x00	XC	04
---	0e01a5	TEL/FAX switching	Time from vocal response to RBT transmission (CNG detection waiting time 2) 0: 4 sec. 1: 2 sec.	Time from reception to voice response transmission (CNG detection waiting time 1) 0: 2 sec. 1: 4 sec.	TEL/FAX switch-ing mode 0: Disabled 1: Enabled	External tele-phone no ring-ing setting 0: Disabled 1: Enabled (disconnected)	TEL/FAX switch-ing ON response details 0: Voice response + RBT transmission 1: RBT transmis-sion only				0x00	0x00	0x00	XC	05
---	0e01a6	Ring Back Tone parameter	RBT form 000: No, 001: Japan, 010: US, 011: UK, 100: Germany, 101 - 111: Others			CED transmit-ted upon TEL/FAX switching	RBT transmission level (HEX) 0 - - 15 dBm				0x00	0x00	0x00	XC	06
---	0e01a7	Operated in international mode	DIS waiting fre-quency 0: Always once, 1: Twice in over-seas communi-cation	Overseas com-munication 0: No, 1: Yes							0x40	0x40	0x40	XC	07
---	0e01a8	Starting speed in international mode (V29 modem)				9600/V.29bps	7200/V.29bps		4800/V.27bps	2400/V.27bps	0x02	0x02	0x02	XC	08
---	0e01a9	Starting speed in international mode (V17 or V33 modem)	14400bps/V.17	12000bps/V.17	9600bps/V.17	7200bps/V.17					0x10	0x10	0x10	XC	09
---	0e01aa	Starting speed in international mode (V34)	33600bps/V.34	31200bps/V.34	28800bps/V.34	26400bps/V.34	24000bps/V.34	21600bps/V.34	19200bps/V.34	16800bps/V.34	0x20	0x20	0x20	XC	0A
---	0e01ab	CD OFF timer	CD OFF timer (unit: 100 ms, HEX)								0x14	0x14	0x14	XC	0B
---	0e01ac	CD ON integration time	CD ON integration time (unit: 100 ms, HEX)								0x06	0x06	0x06	XC	0C
---	0e01ad	Symbol speed maximum allowable value	V34 control ch data rate 0: 1200, 1: 2400				Max. allowable symbol speed 0000: 2400, 0001: Reserved, 0010: 2800 0011: 3000, 0100: 3200, 0101: 3429				0x05	0x05	0x05	XC	0D
---	0e01ae	Symbol rate selection criteria	Attenuation distortion property (-6dB - +6dB) 0000:-6, 0001:-5, 0010:-4, 0011:-3, 0100:-2, 0101:-1, 0110:0, 0111:+1, 1000:+2, 1001:+3, 1010:+4, 1011:+5, 1100:+6				Band end S/N (-6dB - +6dB) 0000:-6, 0001:-5, 0010:-4, 0011:-3, 0100:-2, 0101:-1, 0110:0, 0111:+1, 1000:+2, 1001:+3, 1010:+4, 1011:+5, 1100:+6				0x66	0x66	0x66	XC	0E
---	0e01af	Primary channel data rate selection criteria	V.34 reception gain correction (-4.0dB - +3.5dB) 0000:0, 0001:+0.5, 0010:+1.0, 0011:+1.5, 0100:+2.0, 0101:+2.5, 0110:+3.0, 0111:+3.5, 1000:-4.0, 1001:-3.5, 1010:-3.0, 1011:-2.5, 1100:-2.0, 1101:-1.5, 1110:-1.0, 1111:-0.5				Primary channel data rate selection criteria (-8dB - +7dB) 0000:-8, 0001:-7, 0010:-6, 0011:-5, 0100:-4, 0101:-3, 0110:-2, 0111:-1, 1000:0, 1001:+1, 1010:+2, 1011:+3, 1100:+4, 1101:+5, 1110:+6, 1111:+7				0x08	0x08	0x08	XC	0F
---	0e01b0	V34 primary channel fall back	No. of fall back frame errors (Hex)								0x03	0x03	0x03	XC	10
---	0e01b1	V34 control channel fall back	Fall back EQMVAL value (HEX)								0x40	0x40	0x40	XC	11
---	0e01b2	V34 OFF reception – V34 OFF time after error	Timer value after V34 reception error to reset the V34 OFF reception (min., HEX) (Enabled only when the transmission side cannot be specified)								0x0a	0x0a	0x0a	XC	12
---	0e01b3	V34 OFF reception – No. of successful consecutive V17 reception times to reset V34 OFF	No. of successful consecutive V17 reception times to reset V34 OFF reception after V34 reception error (No. of times, HEX) (Enabled only when the transmission side can be specified with Caller ID)								0x0a	0x0a	0x0a	XC	13

Setting	Address	Item	Contents								Default			CSRC	
			bit7	bit6	bit5	bit4	bit3	bit2	bit1	bit0	Japan	North America	Europe	Com-mand	Parame-ter
---	0e01b4	V34 OFF reception – Function switch (disabled)	V34 OFF function at manual reception 0: Enabled, 1: Disabled						V.34 OFF reset mode = No. of successful consecutive V.17 reception times (ID specified) 0: Enabled, 1: Disabled	V.34 OFF reset mode = time (ID cannot be specified) 0: Enabled, 1: Disabled	0x00	0x02	0x02	XC	14
---	0e01b5	JBIG parameter							Use of following FP JBIG option LO size at reduction 0: No, 1: Yes	JBIG optional L0 capacity 0: No, 1: Yes	0x01	0x01	0x01	XC	15
---	0e01b6 - 0e01b9	JBIG L0 size	JBIG optional LO size used for reduction (hex) (setting rangeF0x01 - 0xffffffff) [0] = HH, [1] = HL, [2] = LH, [3] = LL								0x00 0x00 0x00 0x80	0x00 0x00 0x00 0x80	0x00 0x00 0x00 0x80	XC	16 - 19
---	0e01ba	JBIG OFF reception – Function switch (disabled)							JBIG OFF function at A3 high-definition reception (DIS re-transmission) 0: OFF, 1: ON	JBIG OFF function after JBIG reception error 0: Enabled, 1: Disabled	0x00	0x00	0x00	XC	1A
---	0e01bb	JBIG OFF reception – JBIG OFF time after error	Timer value after JBIG reception error to reset JBIG OFF reception (min., HEX) (10 min. in case of 0)								0x0a	0x0a	0x0a	XC	1B
---	0e01bc	PBX dial tone detection frequency upper limit	PBX dial tone detection frequency upper limit (unit: 10 Hz, HEX)								0x31	0x00	0x00	XC	1C
---	0e01bd	PBX dial tone detection frequency lower limit	PBX dial tone detection frequency lower limit (unit: 10 Hz, HEX)								0x1f	0x00	0x00	XC	1D
---	0e01be	PBX dial tone detection time	PBX dial tone detection time or max. ON time value (unit: 20 ms, HEX)								0x32	0x00	0x00	XC	1E
---	0e01bf	PBX dial tone ON time min. value	PBX dial tone ON time min. value (unit: 20 ms, HEX)								0x00	0x00	0x00	XC	1F
---	0e01c0	PBX dial tone OFF time max. value	PBX dial tone OFF time max. value (unit: 20 ms, HEX)								0x00	0x00	0x00	XC	20
---	0e01c1	PBX dial tone OFF time min. value	PBX dial tone OFF time min. value (unit: 20 ms, HEX)								0x00	0x00	0x00	XC	21
---	0e01c2	PBX dial tone waiting time	PBX dial tone waiting time or pre-pause time (unit: 1 sec, HEX)								0x03	0x03	0x03	XC	22
---	0e01c3	PBX dial tone instantaneous break detection time	Instantaneous break detection time (unit: 20 ms, HEX) or tone detection frequency (times, HEX)								0x00	0x00	0x00	XC	23
---	0e01c4	1st dial tone detection frequency upper limit	1st dial tone detection frequency upper limit (unit: 10 Hz, HEX)								0x31	0x35	0x34	XC	24
---	0e01c5	1st dial tone detection frequency lower limit	1st dial tone detection frequency lower limit (unit: 10 Hz, HEX)								0x1f	0x23	0x1c	XC	25
---	0e01c6	1st dial tone detection time	1st dial tone detection time or max. ON time value (unit: 20 ms, HEX)								0x32	0x32	0x1a	XC	26
---	0e01c7	1st dial tone ON time min. value	1st dial tone ON time min. value (unit: 20 ms, HEX)								0x00	0x00	0x00	XC	27
---	0e01c8	1st dial tone OFF time max. value	1st dial tone OFF time max. value (unit: 20 ms, HEX)								0x00	0x00	0x00	XC	28
---	0e01c9	1st dial tone OFF time min. value	1st dial tone OFF time min. value (unit: 20 ms, HEX)								0x00	0x00	0x00	XC	29

Setting	Address	Item	Contents								Default			CSRC	
			bit7	bit6	bit5	bit4	bit3	bit2	bit1	bit0	Japan	North America	Europe	Com-mand	Parame-ter
---	0e01ca	1st dial tone waiting time	1st dial tone waiting time or pre-pause time (unit: 1 sec, HEX)								0x03	0x03	0x04	XC	2A
---	0e01cb	1st dial tone instantaneous break detection time	Instantaneous break detection time (unit: 20 ms, HEX) or tone detection frequency (times, HEX)								0x00	0x00	0x05	XC	2B
---	0e01cc	2nd dial tone detection frequency upper limit	2nd dial tone detection frequency upper limit (unit: 10 Hz, HEX)								0x31	0x00	0x00	XC	2C
---	0e01cd	2nd dial tone detection frequency lower limit	2nd dial tone detection frequency lower limit (unit: 10 Hz, HEX)								0x1f	0x00	0x00	XC	2D
---	0e01ce	2nd dial tone detection time	2nd dial tone detection time or max. ON time value (unit: 20 ms, HEX)								0x08	0x00	0x00	XC	2E
---	0e01cf	2nd dial tone ON time min. value	2nd dial tone ON time min. value (unit: 20 ms, HEX)								0x02	0x00	0x00	XC	2F
---	0e01d0	2nd dial tone OFF time max. value	2nd dial tone OFF time max. value (unit: 20 ms, HEX)								0x0a	0x00	0x00	XC	30
---	0e01d1	2nd dial tone OFF time min. value	2nd dial tone OFF time min. value (unit: 20 ms, HEX)								0x04	0x00	0x00	XC	31
---	0e01d2	2nd dial tone waiting time	2nd dial tone waiting time or pre-pause time (unit: 1 sec, HEX)								0x03	0x03	0x03	XC	32
---	0e01d3	2nd dial tone instantaneous break detec-tion time	Instantaneous break detection time (unit: 20 ms, HEX) or tone detection frequency (times, HEX)								0x03	0x00	0x00	XC	33
---	0e01d4	3rd dial tone detection frequency upper limit	3rd dial tone detection frequency upper limit (unit: 10 Hz, HEX)								0x00	0x00	0x00	XC	34
---	0e01d5	3rd dial tone detection frequency lower limit	3rd dial tone detection frequency lower limit (unit: 10 Hz, HEX)								0x00	0x00	0x00	XC	35
---	0e01d6	Busy tone detection frequency upper limit	Detection frequency upper limit (unit: 10 Hz, HEX)								0x31	0x00	0x00	XC	36
---	0e01d7	Busy tone detection frequency lower limit	Detection frequency lower limit (unit: 10 Hz, HEX)								0x1f	0x00	0x00	XC	37
---	0e01d8	Busy tone ON time max. value	Busy tone ON time max. value (unit: 20 ms, HEX)								0x1e	0x00	0x00	XC	38
---	0e01d9	Busy tone ON time min. value	Busy tone ON time min. value (unit: 20 ms, HEX)								0x14	0x00	0x00	XC	39
---	0e01da	Busy tone OFF time max. value	Busy tone OFF time max. value (unit: 20 ms, HEX)								0x1e	0x00	0x00	XC	3A
---	0e01db	Busy tone OFF time min. value	Busy tone OFF time min. value (unit: 20 ms, HEX)								0x14	0x00	0x00	XC	3B
---	0e01dc	Ringer detection frequency upper limit	Ringer detection frequency upper limit (unit: 1 Hz, HEX)								0x46	0x46	0x46	XC	3C
---	0e01dd	Ringer detection frequency lower limit	Ringer detection frequency lower limit (unit: 1 Hz, HEX)								0x0c	0x0c	0x0c	XC	3D
---	0e01de	Ringer ON time max. value	Ringer ON time max. value (unit: 20 ms, HEX)								0x00	0x00	0x00	XC	3E
---	0e01df	Ringer ON time min. value	Ringer ON time min. value (unit: 20 ms, HEX)								0x0a	0x0a	0x08	XC	3F
---	0e01e0	Ringer OFF time max. value	Ringer OFF time max. value (unit: 100 ms, HEX)								0x3c	0x3c	0x46	XC	40
---	0e01e1	Ringer OFF time min. value	Ringer OFF time min. value (unit: 100 ms, HEX)								0x02	0x00	0x00	XC	41
---	0e01e2	PB dial signal transmission time	PB dial signal transmission time (unit: 5 ms, HEX)								0x15	0x19	0x15	XC	42
---	0e01e3	PB dial inter-digit pause	PB dial inter-digit pause time (unit: 5 ms, HEX)								0x11	0x15	0x11	XC	43
---	0e01e4	10 pps pulse dial break rate	10 pps pulse dial break rate (%, HEX)								0x44	0x3d	0x3d	XC	44
---	0e01e5	10 pps pulse dial inter-digit pause	10 pps pulse dial inter digit pause (unit: 10 ms, HEX)								0x68	0x68	0x5e	XC	45
---	0e01e6	20 pps pulse dial break rate	20 pps pulse dial break rate (%, HEX)								0x44	0x3d	0x3d	XC	46

Setting	Address	Item	Contents								Default			CSRC	
			bit7	bit6	bit5	bit4	bit3	bit2	bit1	bit0	Japan	North America	Europe	Com-mand	Parame-ter
---	0e01e7	20 pps pulse dial inter-digit pause	20 pps pulse dial inter-digit pause (unit: 10 ms, HEX)								0x59	0x40	0x5c	XC	47
---	0e01e8	PB signal transmission level	PB signal transmission level (unit: 1 dBm, HEX)								0x0a	0x0a	0x06	XC	48
---	0e01e9	PB signal level difference (HL)	PB signal level difference (HL) (unit: 0.5 dBm, HEX)								0x04	0x04	0x04	XC	49
---	0e01ea	DCLOOP integration time at CML OFF	DCLOOP integration time at CML relay OFF (unit: 5 ms, HEX) (Lower limit 20 ms)								0x50	0x50	0x50	XC	4A
---	0e01eb	DCLOOP integration time at CML ON	DCLOOP integration time at CML relay ON (unit: 5 ms, HEX) (Lower limit 20 ms)								0x10	0x10	0x10	XC	4B
---	0e01ec	Pause time						Pause time (unit:sec, HEX)			0x01	0x01	0x01	XC	4C
---	0e01ed	DC-LOOP check mode	DC-LOOP check 0: No, 1: Always								0x00	0x00	0x00	XC	4D
---	0e01ee	DC-LOOP waiting time	DC-LOOP waiting time (unit: 100 ms, HEX)								0x00	0x00	0x00	XC	4E
---	0e01ef	DC-LOOP instantaneous break allowable time (ph.A)	DC-LOOP instantaneous break allowable time (unit: 10 ms, HEX) (at the time of calling, CML ON to end of dialing)								0x00	0x00	0x00	XC	4F
---	0e01f0	DC-LOOP instantaneous break allowable time (ph.B)	DC-LOOP instantaneous break allowable time (unit: 10ms, HEX) (after completion of dialing and after CML ON at the time of reception)								0x00	0x00	0x00	XC	50
---	0e01f1	Dial mode RING DET mode			RING detection mode 01: No. of times, 10: Time		Pulse format 00: General, 01: SW, 10: NO		Dialing method 00: PB, 01: 10pps, 10: 20pps, 11: 16pps		0x12	0x10	0x10	XC	51
---	0e01f2	1st/2nd DT detection parameter					At 2nd DT detec-tion DP dialing only			1st DT2 type	0x00	0x00	0x00	XC	52
---	0e01f3	Tone detection			1300Hz 0: No, 1: Yes	BusyTone 0: No, 1: Yes	PBX DT 0: No, 1: Yes	3rd Dt 0: No, 1: Yes	2nd DT 0: No, 1: Yes	1st DT 0: No, 1: Yes	0x11	0x01	0x01	XC	53
---	0e01f4	No. of busy tone detection times	No. of busy tone detection times (HEX)								0x02	0x00	0x00	XC	54
---	0e01f5	No. of RING detection times	No. of RING detection times (times, HEX)								0x02	0x02	0x02	XC	55
---	0e01f6	RING detection time	Ring detection time (sec, HEX)								0x06	0x06	0x06	XC	56
---	0e01f7	Remote station response waiting time	Remote station response waiting time at calling (unit:sec, HEX)								0x37	0x37	0x37	XC	57
---	0e01f8	Answering machine function	Answering machine CNG detection time (unit: 10 sec, HEX) (1-7)			Answer mode 0: OFF, 1: ON	Answering machine DC-LOOP detection time (unit: 5 sec, HEX) (1-15)				0x64	0x64	0x64	XC	58
---	0e01f9 - 0e01fa	Remote reception password	ASCII[2]								0x2a 0x20	0x2a 0x20	0x2a 0x20	XC	59 - 5A
---	0e01fb	RBT transmission time	RingBackTone signal transmission time (unit: 1000 ms, HEX)								0x14	0x14	0x14	XC	5B
---	0e01fc	CAR signal ON time max. value	CAR ON time max. value (unit: 20 ms, HEX)								0x28	0x00	0x00	XC	5C
---	0e01fd	CAR signal ON time min. value	CAR ON time min. value (unit: 20 ms, HEX)								0x0a	0x00	0x00	XC	5D
---	0e01fe	CAR signal OFF time max. value	CAR OFF time max. value (unit: 20 ms, HEX)								0x28	0x00	0x00	XC	5E
---	0e01ff	CAR signal OFF time min. value	CAR OFF time min. value (unit: 20 ms, HEX)								0x0a	0x00	0x00	XC	5F
---	0e0200	No. of CAR signal detection times	No. of CAR (information reception terminal start signal) detection times (times, HEX)								0x01	0x00	0x00	XC	60
---	0e0201	Caller ID signal waiting time	ID waiting time after Caller ID/DIAL IN primary response (unit 1000 ms, HEX)								0x05	0x00	0x00	XC	61

Setting	Address	Item	Contents								Default			CSRC	
			bit7	bit6	bit5	bit4	bit3	bit2	bit1	bit0	Japan	North America	Europe	Com-mand	Parame-ter
---	0e0202	Remote reception password entry waiting time	Password signal (DTMF) detection waiting time (unit: 100 ms, HEX)								0x14	0x14	0x14	XC	62
---	0e0203	Normal/number display automatic line distinction function	Automatic dis-tinction function 0: OFF, 1: ON				V23 signal detection waiting time when distinguished (x1 sec, HEX)				0x83	0x00	0x00	XC	63
---	0e0204	Monitor speaker (Transmission signal sound)	PB tone monitor at off-hook	Monitor speaker in communication 00: OFF 11: ON		Speaker volume (HEX) (0-1F)					0x10	0x10	0x10	XC	64
---	0e0205 - 0e0218	Numeric ID [20]	ASCII [20] When ID is less than 20 digits, left-justify and insert a space at the head. (No NULL terminator)								ALL 0x20	ALL 0x20	ALL 0x20	XC	65 - 78
---	0e0219	PBX connection mode					PBX call 0000 – 1001: Ten-key, 1011: Reserved, 1100: Reserved, 1101: Reserved 1110: Reserved, 1111: PBX unconnected				0x0f	0x0f	0x0f	XC	79
---	0e021a	Protocol monitor		Speaker selec-tion 0: FK-102 side 1: FL-102 side	TEL/FAX switch-ing RBT monitor sound 0: OFF, 1: ON	Speaker sound-ing disabled when off-hook button is pressed 1: Disabled, 0: Not disabled					0x00	0x00	0x00	XC	7A
---	0e021b	Reception function (disabled)			Remote station name display (name display) (variable) 0: Enabled, 1: Disabled	Reserved (fixed at 1)	Remote station No./name dis-play (variable) 0: Enabled, 1: Disabled	Closed Network RX (variable) 0: Valid 1: Prohibited Be sure to set the same value as that for the main line. (Impossible of each setting)	Reserved (Fixed at 1)	Reserved (Fixed at 1)	0x3f	0x3f	0x3f	XC	7B
---	0e021c	PBX outside line access code 1 (BCD)	1st digit				2nd digit				0xff	0xff	0xff	XC	7C
---	0e021d	PBX outside line access code 2 (BCD)	3rd digit				4th digit				0xff	0xff	0xff	XC	7D
---	0e021e	Limit of long size reception								Limit of long size reception 0: Limit 1: Unlimited	0x00	0x00	0x00	XC	7E
---	0e021f	Max. size of long original received (In the case of 400 dpi or less)	When the resolution for reception is 400 dpi or less, the size of a long original received that is regarded as an error (The maximum size is a decimal value x 10 mm. 0 is regarded as 1000 mm.)								0x64	0x64	0x64	XC	7F
---	0e0220	Max. size of long original received (In the case of 600 dpi or less)	When the resolution for reception is 600 dpi, the size of a long original received that is regarded as an error (The maximum length is a decimal value x 10 mm. 0 is regarded as the same as a value less than 400 dpi above.)								0x64	0x64	0x64	XC	80
---	0e0221	Voice response output level adjustment					Voice response volume (HEX) 0000: min - 1111: max				0x0E	0x0E	0x0E	XC	81
---	0e0222	Monitor speaker (Received signal sound)				Speaker volume (HEX) (0-1F)					0x14	0x14	0x14	XC	82
---	0e0223 - 0e022d	Reserved area									ALL 0x00	ALL 0x00	ALL 0x00	XC	83 - 8D

Setting	Address	Item	Contents								Default			CSRC	
			bit7	bit6	bit5	bit4	bit3	bit2	bit1	bit0	Japan	North America	Europe	Com-mand	Parame-ter
---	0e022e	External phone off hook determination threshold value	External phone off hook determination threshold value current (unit: 1 mA, HEX)								0x00	0x00	0x00	XC	8E

- For main line

Setting	Address	Item	Contents								Default			CSRC	
			bit7	bit6	bit5	bit4	bit3	bit2	bit1	bit0	Japan	North America	Europe	Com-mand	Parame-ter
	0f0000	Reception main scan line resolution ability [0]	400dpi	300dpi	200dpi		16pels/mm		8pels/mm		0xaa	0xaa	0xaa	X2	00
	0f0001	Reception main scan line resolution ability [0]						(1200dpi)	(800dpi)	600dpi	0x01	0x01	0x01	X2	01
	0f0002	Reception sub scanning resolution ability [0]	400dpi	300dpi	200dpi	100dpi	15.4 l/mm		7.7 l/mm	3.85 l/mm	0xbb	0xbb	0xbb	X2	02
	0f0003	Reception sub scanning resolution ability [1]						(1200dpi)	(800dpi)	600dpi	0x01	0x01	0x01	X2	03
	0f0004	Reception coding method ability			(JPEG)	JBIG	MMR	MR	MH	THRU	0x1f	0x1f	0x1f	X2	04
	0f0005	Received document width ability			(Legal)	(Letter)	A3	B4	A4	(A5)	0x0e	0x0e	0x0e	X2	05
	0f0006	Received document length ability		Unlimited	(Legal)	(Letter)		B4	A4	(A5)	0x46	0x46	0x46	X2	06
	0f0007	Reception speed ability [0]				V.29-96	V.29-72		V.27-48	V.27-24	0x1b	0x1b	0x1b	X2	07
	0f0008	Reception speed ability [1]	V.17-144	V.17-120	V.17-96	V.17-72	V.33-144	V.33-120	(TCM-96)	(TCM-72)	0xfc	0xfc	0xfc	X2	08
	0f0009	Reception speed ability [2]	V.34-192	V.34-168	V.34-144	V.34-120	V.34-96	V.34-72	V.34-48	V.34-24	0xff	0xff	0xff	X2	09
	0f000a	Reception speed ability [3]			V.34-336	V.34-312	V.34-288	V.34-264	V.34-240	V.34-216	0x3f	0x3f	0x3f	X2	0A
	0f000b	Reception MSLT ability	T3.85 or 200*100dpi (0-40) ms unit								0x05	0x05	0x05	X2	0B
	0f000c	Reception MSLT ability	T7.7 or 200*200dpi (0-40) ms unit								0x05	0x05	0x05	X2	0C
	0f000d	Reception MSLT ability	T11.55 or 300*300dpi (0-40) ms unit								0x05	0x05	0x05	X2	0D
	0f000e	Reception MSLT ability	T15.4 or 400*400dpi or 600*600dpi (0-40) ms unit								0x05	0x05	0x05	X2	0E
	0f000f	Reception ECM ability								ECM reception capability 0: OFF 1: ON	0x01	0x01	0x01	X2	0F
	0f0010	Reception protocol ability			FAX-CSRC	V8/V34	DIAG			G3S	0x39	0x39	0x39	X2	10
	0f0011	Reception option frame ability				(BFT)	(BTM)	PWD	(SEP)	SUB	0x07	0x07	0x07	X2	11
	0f0012 - 0f001f	Reserved area									ALL 0x00	ALL 0x00	ALL 0x00	X2	12 - 1F

- For sub line

Setting	Address	Item	Contents								Default			CSRC	
			bit7	bit6	bit5	bit4	bit3	bit2	bit1	bit0	Japan	North America	Europe	Com-mand	Parame-ter
	0f0020	Reception main scan resolution capacity [0]	400dpi	300dpi	200dpi		16pels/mm		8pels/mm		0xaa	0xaa	0xaa	X2	20
	0f0021	Reception main scan resolution capacity [1]						(1200dpi)	(800dpi)	600dpi	0x01	0x01	0x01	X2	21
	0f0022	Reception sub scan resolution capacity [0]	400dpi	300dpi	200dpi	100dpi	15.4 l/mm		7.7 l/mm	3.85 l/mm	0xbb	0xbb	0xbb	X2	22
	0f0023	Reception sub scan resolution capacity [1]						(1200dpi)	(800dpi)	600dpi	0x01	0x01	0x01	X2	23
	0f0024	Reception coding system capacity			(JPEG)	JBIG	MMR	MR	MH	THRU	0x1f	0x1f	0x1f	X2	24
	0f0025	Reception original width capacity			(Legal)	(Letter)	A3	B4	A4	(A5)	0x0e	0x0e	0x0e	X2	25
	0f0026	Reception original length capacity		Unlimited	(Legal)	(Letter)		B4	A4	(A5)	0x46	0x46	0x46	X2	26
	0f0027	Reception speed capacity [0]				V.29-96	V.29-72		V.27-48	V.27-24	0x1b	0x1b	0x1b	X2	27
	0f0028	Reception speed capacity [1]	V.17-144	V.17-120	V.17-96	V.17-72	V.33-144	V.33-120	(TCM-96)	(TCM-72)	0xfc	0xfc	0xfc	X2	28
	0f0029	Reception speed capacity [2]	V.34-192	V.34-168	V.34-144	V.34-120	V.34-96	V.34-72	V.34-48	V.34-24	0xff	0xff	0xff	X2	29
	0f002a	Reception speed capacity [3]			V.34-336	V.34-312	V.34-288	V.34-264	V.34-240	V.34-216	0x3f	0x3f	0x3f	X2	2A
	0f002b	Reception MSLT capacity	T3.85 or 200*100 dpi (0-40) ms unit								0x05	0x05	0x05	X2	2B
	0f002c	Reception MSLT capacity	T7.7 or 200*200 dpi (0-40) ms unit								0x05	0x05	0x05	X2	2C
	0f002d	Reception MSLT capacity	T11.55 or 300*300 dpi (0-40) ms unit								0x05	0x05	0x05	X2	2D
	0f002e	Reception MSLT capacity	T15.4 or 400*400 dpi or 600*600 dpi (0-40) ms unit								0x05	0x05	0x05	X2	2E
	0f002f	Reception ECM capacity								ECM reception capacity 0: OFF, 1: ON	0x01	0x01	0x01	X2	2F
	0f0030	Reception protocol capacity				V8/V34				G3S	0x11	0x11	0x11	X2	30
	0f0031	Reception option frame capacity				(BFT)	(BTM)	PWD	(SEP)	SUB	0x07	0x07	0x07	X2	31
	0f0032 - 0f003f	Reserved area									ALL 0x00	ALL 0x00	ALL 0x00	X2	32 - 3F

- For main line

Setting	Address	Item	Contents								Default			CSRC	
			bit7	bit6	bit5	bit4	bit3	bit2	bit1	bit0	Japan	North America	Europe	Com-mand	Parame-ter
	100000	Transmission main scan line resolution instruction [0]	400dpi	300dpi	200dpi		16pels/mm		8pels/mm		0x22	0x22	0x22	X2	40
	100001	Transmission main scan line resolution instruction [1]						(1200dpi)	(800dpi)	600dpi	0x01	0x01	0x01	X2	41
	100002	Transmission sub scanning resolution instruction [0]	400dpi	300dpi	200dpi	100dpi	15.4 l/mm		7.7 l/mm	3.85 l/mm	0x11	0x11	0x11	X2	42
	100003	Transmission sub scanning resolution instruction [1]						(1200dpi)	(800dpi)	600dpi	0x01	0x01	0x01	X2	43
	100004	Transmission coding method instruction			(JPEG)	JBIG	MMR	MR	MH	THRU	0x1f	0x1f	0x1f	X2	44
	100005	Transmission document width instruction			(Legal)	(Letter)	A3	B4	A4	(A5)	0x0e	0x0e	0x0e	X2	45
	100006	Transmission document length instruction		Unlimited	(Legal)	(Letter)		B4	A4	(A5)	0x46	0x46	0x46	X2	46
	100007	Transmission speed instruction [0]				V.29-96	V.29-72		V.27-48	V.27-24	0x1b	0x1b	0x1b	X2	47
	100008	Transmission speed instruction [1]	V.17-144	V.17-120	V.17-96	V.17-72	V.33-144	V.33-120	(TCM-96)	(TCM-72)	0xf0	0xf0	0xf0	X2	48
	100009	Transmission speed instruction [2]	V.34-192	V.34-168	V.34-144	V.34-120	V.34-96	V.34-72	V.34-48	V.34-24	0xff	0xff	0xff	X2	49
	10000a	Transmission speed instruction [3]			V.34-336	V.34-312	V.34-288	V.34-264	V.34-240	V.34-216	0x3f	0x3f	0x3f	X2	4A
	10000b	Transmission MSLT instruction	T3.85 or 200*100dpi (0-40) ms unit								0x05	0x05	0x05	X2	4B
	10000c	Transmission MSLT instruction	T7.7 or 200*200dpi (0-40) ms unit								0x05	0x05	0x05	X2	4C
	10000d	Transmission MSLT instruction	T11.55 or 300*300dpi (0-40) ms unit								0x05	0x05	0x05	X2	4D
	10000e	Transmission MSLT instruction	T15.4 or 400*400dpi or 600*600dpi (0-40) ms unit								0x05	0x05	0x05	X2	4E
	10000f	Transmission ECM instruction							ECM transmis-sion frame size 0: 256 1: 64	ECM transmis-sion instruction 0: OFF 1: ON	0x01	0x01	0x01	X2	4F
	100010	Transmission protocol instruction			FAX-CSRC	V8/V34	DIAG			G3S	0x11	0x11	0x11	X2	50
	100011	Transmission option frame instruction				(BFT)	(BTM)	PWD	(SEP)	SUB	0x00	0x00	0x00	X2	51
	100012 - 10001f	Reserved area									ALL 0x00	ALL 0x00	ALL 0x00	X2	52 - 5F

- For sub line

Setting	Address	Item	Contents								Default			CSRC	
			bit7	bit6	bit5	bit4	bit3	bit2	bit1	bit0	Japan	North America	Europe	Com-mand	Parame-ter
	100020	Transmission main scan line resolution instruction [0]	400dpi	300dpi	200dpi		16pels/mm		8pels/mm		0x22	0x22	0x22	X2	60
	100021	Transmission main scan line resolution instruction [1]						1200dpi	800dpi	600dpi	0x01	0x01	0x01	X2	61
	100022	Transmission sub scanning resolution instruction [0]	400dpi	300dpi	200dpi	100dpi	15.4 l/mm		7.7 l/mm	3.85 l/mm	0x11	0x11	0x11	X2	62
	100023	Transmission sub scanning resolution instruction [1]						1200dpi	800dpi	600dpi	0x01	0x01	0x01	X2	63
	100024	Transmission coding method instruction			(JPEG)	JBIG	MMR	MR	MH	THRU	0x1f	0x1f	0x1f	X2	64
	100025	Transmission document width instruction			(Legal)	(Letter)	A3	B4	A4	(A5)	0x0e	0x0e	0x0e	X2	65
	100026	Transmission document length instruction		Unlimited	(Legal)	(Letter)		B4	A4	(A5)	0x46	0x46	0x46	X2	66
	100027	Transmission speed instruction [0]				V.29-96	V.29-72		V.27-48	V.27-24	0x1b	0x1b	0x1b	X2	67
	100028	Transmission speed instruction [1]	V.17-144	V.17-120	V.17-96	V.17-72	V.33-144	V.33-120	(TCM-96)	(TCM-72)	0xf0	0xf0	0xf0	X2	68
	100029	Transmission speed instruction [2]	V.34-192	V.34-168	V.34-144	V.34-120	V.34-96	V.34-72	V.34-48	V.34-24	0xff	0xff	0xff	X2	69
	10002a	Transmission speed instruction [3]			V.34-336	V.34-312	V.34-288	V.34-264	V.34-240	V.34-216	0x3f	0x3f	0x3f	X2	6A
	10002b	Transmission MSLT instruction	T3.85 or 200*100dpi (0-40) ms unit								0x05	0x05	0x05	X2	6B
	10002c	Transmission MSLT instruction	T7.7 or 200*200dpi (0-40) ms unit								0x05	0x05	0x05	X2	6C
	10002d	Transmission MSLT instruction	T11.55 or 300*300dpi (0-40) ms unit								0x05	0x05	0x05	X2	6D
	10002e	Transmission MSLT instruction	T15.4 or 400*400dpi or 600*600dpi (0-40) ms unit								0x05	0x05	0x05	X2	6E
	10002f	Transmission ECM instruction							ECM transmis-sion frame size 0: 256 1: 64	ECM transmis-sion instruction 0: OFF 1: ON	0x01	0x01	0x01	X2	6F
	100030	Transmission protocol instruction				V8/V34				G3S	0x11	0x11	0x11	X2	70
	100031	Transmission option frame instruction				(BFT)	(BTM)	PWD	(SEP)	SUB	0x00	0x00	0x00	X2	71
	100032 - 10003f	Reserved area									ALL 0x00	ALL 0x00	ALL 0x00	X2	72 - 7F

bizhub 423/363/283/223

Setting	Address	Item	Contents								Default			CSRC	
			bit7	bit6	bit5	bit4	bit3	bit2	bit1	bit0	Japan	North America	Europe	Com-mand	Parame-ter
Utility Mode (0,1,4)	120000	TTI/RTI setting		SW for prohibit-ing the printing of the TTI address 0: Printing of the address allowed 1: Printing of the address not allowed	RTI addition 00:OFF 01: (OFF) 10: INSIDE 11: OUTSIDE		TTI denomina-tor display 0: Total 1: Individual	Inhibition of TTI setting menu INSIDE display 0: No 1: Yes			0x03	0x03	0x03	X2	80
Utility Mode (2 - 5) Utility Mode Special Set-ting (6)	120001	Report setting 1		Addition of image 0: No, 1: Yes	Automatic output of reserved report 0: No, 1: Yes	TX result report 00: Not output 01: Output only at errors 10: Always output 11: (Normal output)		Automatic output of sequential communication report 0: No, 1: Yes			6c	6c	6c	X2	81
Utility Mode (0 - 2) Utility Mode Special Set-ting (0,1)	120002	Report setting 2	The FAX CSRC communication log is printed on the Activity Report 0: No, 1: Yes			Abbreviation List 0: numerical order 1: sorted order	Automatic daily output of journal 0: No 1: Yes	Automatic output of journal 100 communication 0: No 1: Yes	Automatic output or error trace list 0: No 1: Yes	Automatic output of trace list 0: No 1: Yes	0x04	0x04	0x04	X2	82
	120003	Output time of daily automatic output of journal (hour: grade of 10)	Designation of 24 hours ASCII four-digit								0x30	0x30	0x30	X2	83
	120004	Output time of daily automatic output of journal (hour: grade of 1)									0x39	0x39	0x39	X2	84
	120005	Output time of daily automatic output of journal (minute: grade of 10)									0x30	0x30	0x30	X2	85
	120006	Output time of daily automatic output of journal (minute: grade of 1)									0x30	0x30	0x30	X2	86
Utility Mode (3 - 5) Utility Mode Special Set-ting (0)	120007	Output setting	Setting of daily difference for daily mode set for automatic output 0: Daily differ-ence not limited 1: Daily differ-ence limited		Transmission result report selection screen 0: Not displayed 1: Displayed	Broadcast result report output method 0: All destina-tions 1: 1Each desti-nation	Printing during auxiliary power OFF 0: No 1: Yes	Output order of journal transmis-sion result reser-vation report 0: From old one 1: From new one			0x00	0x00	0x00	X2	87
	120008	Invisible mode						Display of PC-FAX TX [PC] in Note of report 0: No 1: Yes		Details of remote station display during program direct registered calls and abbre-viated dialing 0: Display of reg-istered name 1: Display of number	0	0	0	X2	88
---	120009	Reserved area									0x00	0x00	0x00	X2	89

Setting	Address	Item	Contents								Default			CSRC	
			bit7	bit6	bit5	bit4	bit3	bit2	bit1	bit0	Japan	North America	Europe	Com-mand	Parame-ter
Utility Mode (0 - 3)	12000b	F code report setting					Relay request report output 0: No 1: Yes	Relay TX result report output 0: No 1: Yes	Bulletin polling transmission report output 0: No 1: Yes	Confidential reception report output 0: No 1: Yes	0x0f	0x0f	0x0f	X2	8B
Utility Mode	12000c	Internet Fax report Setting		Network Fax RX Error Report (0: OFF, 1: ON)	Internet Broad-cast Fax Result Report (0: OFF, 1: ON)		E-Mail Message Body printing (0: ON, 1: OFF)	TX Error Report printing (0: ON, 1: OFF)	MDN Message printing (0: ON, 1: OFF)	DSN Message printing (0: ON, 1: OFF)	0x61	0x61	0x61	X2	8C
Utility Mode	12000d	FAX report setting							PC-Fax Error report output 0: No, 1: Yes	Relay print 0: No, 1: Yes	0x00	0x00	0x00	X2	8D
---	12000e - 12000f	Reserved area									0x00	0x00	0x00	X2	8E - 9F

Setting	Address	Item	Contents								Default			CSRC	
			bit7	bit6	bit5	bit4	bit3	bit2	bit1	bit0	Japan	North America	Europe	Com-mand	Parame-ter
Utility Mode	130000	Reserved area									0x11	0x11	0x11	XE	00
Utility Mode Special Setting (6,7)	130001	FAX scan HP2	Frame erasure HP 01: 5mm 10: 10mm 11: 15mm								0x41	0x41	0x41	XE	01
Utility Mode Special Setting (0,1,2)	130002	FAX scan HP3						Original reading mode 00: Normal 01: Mixed size 10: ADF irregular		Scanned from the right side at book transmis-sion	0x04	0x04	0x04	XE	02
---	130003	Reserved area									0x06	0x06	0x06	XE	03
---	130004	Reserved area									0x09	0x09	0x09	XE	04
---	130005	Reserved area									0x05	0x05	0x05	XE	05
---	130006	Reserved area									0x01	0x01	0x01	XE	06
Utility Mode (2 - 7)	130007	HP for FAX main screen	FAX main screen selection 0000: Program 0001: Group 0010: Abbreviation 0011: Keypad				Automatic screen switch-ing at the time of reception 0: ON 1: OFF				0x09	0x09	0x09	XE	07
Utility Mode Special Setting (0,1)	130008	Rotation setting HP						B5R 0: No 1: Yes	Letter 0: No 1: Yes	A4 0: No 1: Yes	0x03	0x03	0x03	XE	08
---	130009	Reserved area	Time until auto reset 0: OFF, 1-9 min.								0x00	0x00	0x00	XE	09
---	13000a	Not used.												XE	0A
Utility Mode Special Setting	13000b	Error display time	10 - 250 seconds, 0: Error display HOLD								0x14	0x14	0x14	XE	0B

Setting	Address	Item	Contents								Default			CSRC	
			bit7	bit6	bit5	bit4	bit3	bit2	bit1	bit0	Japan	North America	Europe	Com-mand	Parame-ter
---	13000c	Reserved area									0x00	0x00	0x00	XE	0C
---	13000d	Reserved area									0x05	0x05	0x05	XE	0D
---	13000e	Reserved area									0x00	0x00	0x00	XE	0E - 34
Utility Mode Special Setting	130035	Utility Mode display setting	Relay display 0: Yes 1: No		Incomplete TX hold display 0: Yes 1: No	Compulsory memory recep-tion display 0: Yes 1: No	Caller No./Name display 0: Yes 1: No	Closed commu-nication display 0: Yes 1: No	Remote recep-tion display 0: Yes 1: No	DialIn display 0: Yes 1: No	0x00	0x0b	0x0b	XE	35
Utility Mode Special Setting (0,1)	130036	Utility Mode display setting 2					OFF display of Header Position 0: Yes 1: No		Receive reject display 0: Yes 1: No		0x05	0x0f	0x07	XE	36
---	130037	Not used.												XE	37
---	130038	Destination default screen setting	0x00: Group 0x01: FAX 0x02: E-mail 0x03: BOX 0x04: I-Fax 0x05: IP address FAX 0x06: SMB 0x07: FTP 0x08: WebDAV								0x00	0x00	0x00	XE	38
Utility Mode	130039- 130044	Reserved area									0x00	0x00	0x00	XE	39 - 44
Utility Mode	130045 - 130050	DialIn additional No. (FAX)	ASCII 11 digits + NULL								ALL 0x00	ALL 0x00	ALL 0x00	XE	45 - 50
Utility Mode	130051 - 13005c	DialIn additional No. (PC-FAX)	ASCII 11 digits + NULL								ALL 0x00	ALL 0x00	ALL 0x00	XE	51 - 5C
Utility Mode	13005d - 130068	DialIn additional No. (telephone)	ASCII 11 digits + NULL								ALL 0x00	ALL 0x00	ALL 0x00	XE	5D - 68
Utility Mode Special Setting	130069	Upper limit for signal transmission level setting	(-dBm) Switched according to destination of FAX								0x0a	0x0a	0x08	XE	69
Utility Mode	13006a	Lower limit for call termination frequency setting range	(No. of times) Switched according to destination of FAX								0x00	0x00	0x00	XE	6A
Utility Mode	13006b	Upper limit for call termination frequency setting range	(No. of times) Switched according to destination of FAX								0x0f	0x0f	0x0f	XE	6B
---	13006c	Dial method setting							Dial method setting (Switched according to destination of FAX) 00: PB, 10pps, 20pps 01: PB 10: PB, 10pps 11: PB, 10pps, 16pps		0x00	0x22	0x11	XE	6C
Utility Mode Utility Mode Special Setting	13006d	Upper limit for redial frequency setting range	(No. of times) Switched according to destination of FAX								0x07	0x01	0x07	XE	6D
Utility Mode	13006e	Upper limit for redial interval setting range	(Minutes) Switched according to destination of FAX								0x01	0x01	0x01	XE	6E
Utility Mode	13006f	Lower limit for redial interval setting range	(Minutes) Switched according to destination of FAX								0x0f	0x0f	0x0f	XE	6F
Utility Mode(0,1) Utility Mode Special Set-ting (2 - 6)	130070	Telephone-related function setting menu display (1)		Remote recep-tion 0: OFF 1: ON	Dial-in 0: OFF 1: ON	Number display 0: OFF 1: ON	Pseudo RBT form 0: OFF 1: ON	Pseudo RBT transmission level 0: OFF 1: ON	Connection to answering machine 0: OFF 1: ON	TEL/FAX switching 0: OFF 1: ON	0x7f	0x00	0x00	XE	70

Setting	Address	Item	Contents								Default			CSRC	
			bit7	bit6	bit5	bit4	bit3	bit2	bit1	bit0	Japan	North America	Europe	Com-mand	Parame-ter
Utility Mode	130071	Number display related function setting					Name display at the time of FAX reception (line 2) 00: No display 01: Display of number 10: Display of name		Name displayed Type of display at fax reception 00: Not displayed 01: Number displayed 10: Name displayed		0x00	0x00	0x00	XE	71
	130072	Setting of lower limit for DTMF transmission level setting range	(-dBm) Switched according to destination of FAX								0x0e	0x0f	0x09	XE	72
	130073	Setting of upper limit for DTMF transmission level setting range	(-dBm) Switched according to destination of FAX								0x0a	0x0a	0x05	XE	73
	130074	Setting of lower limit for DTMF H-L level difference setting range	(dB) Switched according to destination of FAX								0x01	0x01	0x01	XE	74
	130075	Setting of upper limit for DTMF H-L level difference setting range	(dB) Switched according to destination of FAX								0x04	0x04	0x04	XE	75
	130076	For transmission						Restrict Plural Fax Destination 0: OFF 1: ON	Destination Check Display Function 0: OFF 1: ON	Screen display during transmis-sion 0: OFF 1: ON	0x00	0x00	0x00	XE	76
	130077	Lower limit setting of the signal send-out level setting range	(-dBm) Switched according to destination of FAX								0x0f	0x0f	0x0f	XE	77
	130078 - 13007b	Character-to-search default for FAX main screen	bit0 :[Main] 0: OFF, 1: ON bit10 :[ABC] 0: OFF, 1: ON bit11 :[DEF] 0: OFF, 1: ON bit12 :[GHI] 0: OFF, 1: ON bit13 :[JKL] 0: OFF, 1: ON bit14 :[MNO] 0: OFF, 1: ON bit15 :[PQRS] 0: OFF, 1: ON bit16 :[TUV] 0: OFF, 1: ON bit17 :[WXYZ] 0: OFF, 1: ON bit18 :[etc] 0: OFF, 1: ON								0x01	0x01	0x01	XE	78 - 7B
	13007c	Not used.												XE	7C
	13007d	Initial program display page	1 - 27 page (HEX: 0x01 - 0x1b), 0: Temporary distribution								0x01	0x01	0x01	XE	7D
	130080 - 130082	Reserved area									0x00	0x00	0x00	XE	80 - 82
	130083	Destination type display setting								Destination type display 0: No 1: Yes	0x01	0x01	0x01	XE	83
	130084	No. of destination display characters setting	0x0e: 14 characters, 0x18: 24 characters								0x0e	0x0e	0x0e	XE	84

12.15.8 Line 1, Line 2-Initialization

A. Use

- The following data can be initialized. Select data you want to initialize and touch the [Yes].
- Fax Function Parameter : The function set condition is initialized into the Factory Default condition.
- Communication Journal Data : All of the Communication Journal is erased.

Supplement: For the formats of the Abbreviated Registration Data, the Program Registration Data, The Group Registration Data, and the F-code Box Data, see “Fax File Format”.
See P.503

B. Procedure

1. Display the [Service Mode] screen.
2. Touch the [FAX] key.
3. Touch the [Initialization] key.
4. Select data you want to initialize.

Supplement: Two or more selections are possible for data.

5. Touch the [Yes].
6. When a verification message is displayed, touch the [Yes].
7. The data selected is initialized.

12.16 Finisher

12.16.1 FS-FN adjustment - Center Staple Position

A. Use

- Adjust the stapling position for each paper size when printing with the center staple function.
- Adjust the stapling position for each paper size when printing with the center staple function.

B. Procedure

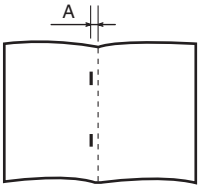

A11PF3C500DA

NOTE

- **After [Half-Fold Position] adjustment, make this [Center Staple Position] adjustment.**

1. Place five sheets of originals on the ADF.
2. Make a set of copy in the saddle stitching mode.
3. Check the amount of horizontal deviation (A) between the staple and the half fold positions on the set of copy.

Specification A: 0 ± 1.0 mm
Adjustment range: -10.0 mm to +10.0 mm (1 step: 0.1 mm)

4. If (A) is out of the specified range, make the following adjustment.
5. Call the Service Mode to the screen.
6. Touch [Finisher] → [FS-FN adjustment] → [Center Staple Position].
7. Touch the paper size where staple position is adjusted.
8. Look at the copy and adjust the staple position with the [+]/[-] key.

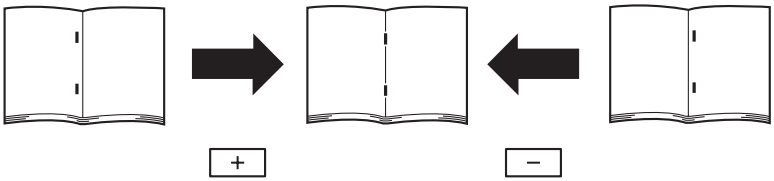

A11PF3C501DA

9. Press the Reset key.
10. Touch [Exit] on the Service Mode screen.
11. Turn OFF the main power switch, wait for 10 sec., then turn the switch ON.
12. Make another set of copy sample and check the amount of deviation (A).

12.16.2 FS-FN adjustment - Half-Fold Position

A. Use

- Use this adjustment to adjust the half-fold position in half-fold printing.

B. Procedure

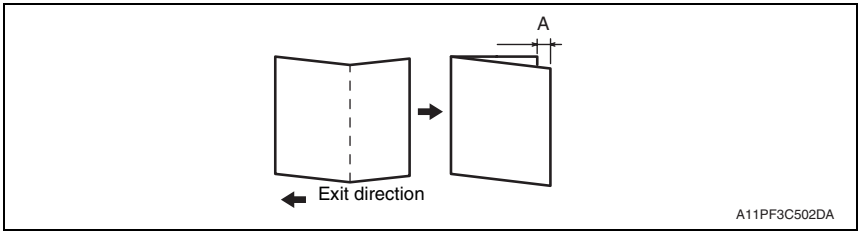

1. Place two sheets of originals on the ADF.
2. Make a copy in the folding mode.
3. Fold the copies along the crease.
4. Measure the amount of deviation (A).

Specification A: 0 ± 1.0 mm
Adjustment range: -10.0 mm to +10.0 mm (1 step: 0.1 mm)

5. If (A) is out of the specified range, make the following adjustment.
6. Call the Service Mode to the screen.
7. Touch [Finisher] → [FS-FN adjustment] → [Half-Fold Position].
8. Touch the paper size where half-fold position is adjusted.
9. Look at the copy and adjust the half-fold position with the [+]/[-] key.

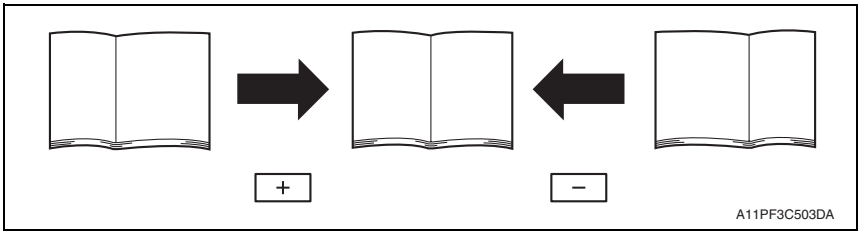

10. Press the Reset key.
11. Touch [Exit] on the Service Mode screen.
12. Turn OFF the main power switch, wait for 10 sec., then turn the switch ON.
13. Make another set of copy sample and check the amount of deviation (A).

12.16.3 FS-FN adjustment - Punch Edge Adj

A. Use

- To change the horizontal position of the punch holes.

B. Procedure

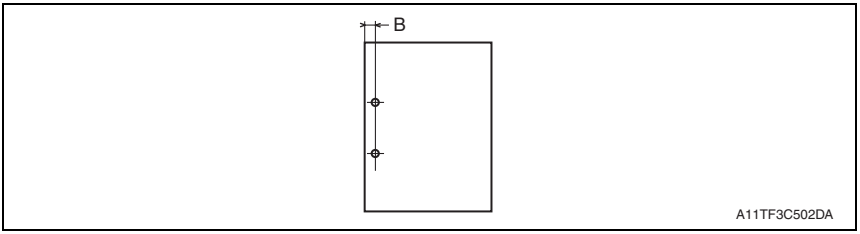

1. Make a copy sample in the punch mode.
2. Make an adjustment so that the width B is within the following range.

Specification B: 9.5 mm ± 1.0 mm (2-3 hole), 11.0 mm ± 1.0 mm (2-4 hole), 10.5 mm ± 1.0 mm (SWE4 hole)
Adjustment range: -10.0 mm to +10.0 mm (1 step: 0.1 mm)

3. Call the Service Mode to the screen.
4. Touch [Finisher] → [FS-FN adjustment] → [Punch Edge Adj].
5. Touch the paper type where punch horizontal position is adjusted.
6. Look at the copy and adjust the punch horizontal position with the [+]/[-] key.
   To make width B greater: Enter the value of [+]
   To make width B smaller: Enter the value of [-]

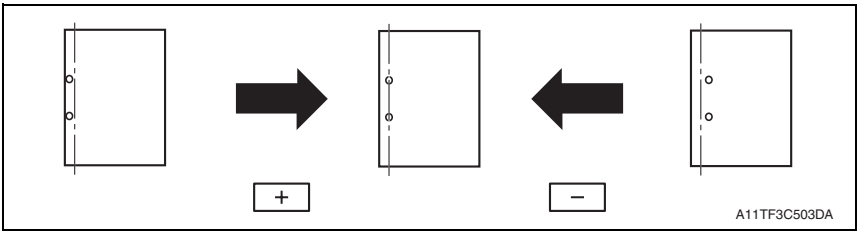

7. Press the Reset key.
8. Touch [Exit] on the Service Mode screen.
9. Turn OFF the main power switch, wait for 10 sec., then turn the switch ON.
10. Make another set of copy sample and check the amount of deviation (A).

12.16.4 FS-FN adjustment - Punch Regist Loop Size

A. Use

- Adjusts the punch loop size used for paper exited from the main body.
- To address problems such as misaligned punch holes, wrinkled paper, and jam at the punch registration section.

B. Procedure

1. Call the Service Mode to the screen.
2. Touch [Finisher] → [FS-FN adjustment] → [Punch Regist Loop Size].
3. Touch the paper size where punch regist loop size is adjusted.
4. Set the correction value using the [+]/[-] keys.
   Misaligned punched holes: Enter the value of [+]
   Wrinkled paper: Enter the value of [-]

Adjustment range: -4.0 to +4.0

5. Press the Reset key.
6. Touch [Exit] on the Service Mode screen.
7. Turn OFF the main power switch, wait for 10 sec., then turn the switch ON.

12.16.5 FS-FN adjustment - Finisher Components Test Mode

A. Use

- Use this adjustment to check finisher's operation.

B. Procedure

1. Call the Service Mode to the screen.
2. Touch [Finisher] → [FS-FN adjustment] → [Finisher Components Test Mode].
3. Touch [1] or [2] to select a mode.
4. Press the Start key to start finisher operation.
5. Press the Stop key to stop ongoing finisher operation.

C. Finisher Components Test Mode list (FS-527/SD-509)

NOTE

- **"Tray 1" indicates the tray 2 (lower) and "Tray 2" is the tray 1 (upper) shown on the panel.**

Mode	
Finisher Components Test Mode1	Stapler movement
	Alignment Moving
	Tray up/down operation
	FD Stopper Operation
	Punch Drive Standard Holes
	Punch Drive MC (2 Holes)
	Tray 1 Exit Roller Open/Close
	Accommodation Roller Open/Close
	2-Side Path Switch
	Conveyance Drive
	Tray 2 Path Switch
	Upper/Lower Path Switch
	Paddle Operation
	Shift Operation
Finisher Components Test Mode2	Saddle Stapler Operation
	Center fold knife operation
	Center staple Transport motor Drive
	Edge Stopper Operation
	Center Staple Paddle operation

D. Finisher Components Test Mode list (FS-529)

Mode	
Finisher Components Test Mode1	Stapler Movement
	Alignment Plate F/R Movement
	Tray up/down operation
	FD Stopper operation
	Exit Roller Retraction
	Paper Path Switch
	Conveyance Drive
	Paper surface Detect Solenoid
	Paddling Belt Up/Down
	Paddle 1 Rotation Solenoid Drive

12.16.6 FS-FN adjustment - Load Data

A. Use

- Register or call values adjusted for the finisher when it was installed at the customer site.

B. Procedure

1. Call the Service Mode to the screen.
2. Touch [Finisher] → [FS-FN adjustment] → [Load Data].
3. Select a mode from the following.

- Present adjusted value enrollment: Registers values adjusted for the finisher at the installation.
- Enrollment lingua set point call: Calls values adjusted for the finisher at the installation.

4. Press the Start key.
5. Check that [OK] is displayed.
6. Touch [END].
7. Touch [Exit] on the Service Mode screen.
8. Turn OFF the main power switch. Then, wait for 10 sec. or more and turn ON the main power switch.

12.16.7 FS-FN adjustment - Alignment Plate Position

A. Use

- When FS-529 is installed, use this feature to fine adjust the aligning plate that aligns ejected paper.

B. Procedure

1. Call the Service Mode to the screen.
2. Touch [Finisher] → [FS-FN adjustment] → [Alignment Plate Position].
3. Select the [Alignment Plate Position (Back)] or [Alignment Plate Position (Side)].

The default setting is “0.0mm”.
Adjustment range: -10.0 mm to +10.0 mm (1 step: 0.1 mm)

4. Set and adjust a value with the [+]/[-] key.
5. Touch [OK].
6. Touch [Exit] on the Service Mode screen.
7. Turn OFF the main power switch, wait for 10 sec., then turn the switch ON.

12.16.8 FS-FN adjustment - Paper Alignment Guides W. Adj.

A. Use

- To fine adjust the horizontal width of the aligning plate.
- Use this feature to fine adjust the aligning plate that aligns ejected paper.

B. Procedure

1. Call the Service Mode to the screen.
2. Touch [Finisher] → [FS-FN adjustment] → [Paper Alignment Guides W. Adj.].
3. Select a mode from the following.

The default setting is “0.0mm”.
Adjustment range: -10.0 mm to +10.0 mm (1 step: 0.1 mm)

4. Set and adjust a value with the [+]/[-] key.
5. Press the Reset key.
6. Touch [Exit] on the Service Mode screen.
7. Turn OFF the main power switch, wait for 10 sec., then turn the switch ON.

12.16.9 Punch Option Setting

A. Use

- Specifies punch settings depending on the optional punch kit attached to the finisher.
- An individual punch setting needs to be made according to the type of the punch option.

B. Procedure

1. Call the Service Mode to the screen.
2. Touch [Finisher] → [Punch Option Setting].
3. Touch [PK-517].
4. Touch [2-Holes/3-Holes], [2-Holes/4-Holes], [EU4 holes] or [SWE4 holes].
5. Touch [decision].
6. Touch [END].
7. Touch [Exit] on the Service Mode screen.
8. Turn OFF the main power switch. Then, wait for 10 sec. or more and turn ON the main power switch.

12.16.10 Job Separator

A. Use

- Checks the job separator's operation.

B. Procedure

1. Call the Service Mode to the screen.
2. Touch [Finisher] → [Job Separator].
3. Select the mode where you wish to check the operation.
4. Press the Start key to start job separator operation.
5. Press the Stop key to stop ongoing job separator operation.

12.17 Internet ISW

- By using this setting, the firmware stored in the server can be downloaded over internet for upgrading.
- For details for upgrading the firmware, refer to “FIRMWARE REWRITING” in the Maintenance section.
  See P.143

12.17.1 Internet ISW Set

A. Use

- To set whether or not to enable each setting for Internet ISW.
- To use when upgrading the firmware by Internet ISW.
- Each setting such as Server setting will be valid by setting this to “ON”.

NOTE

- **When the following setting is set to “ON”, this setting will automatically be set to “OFF” and cannot be changed.**
  [Administrator Settings] → [Security Settings] → [Enhanced Security Mode]

B. Procedure

- The default setting is OFF.

ON “OFF”

12.17.2 HTTP Setting

- It will be displayed only when [Internet ISW Set] is set to “ON”.

12.17.3 HTTP Setting-Data Input Setting

A. Use

- To set whether or not to enable downloading using the HTTP protocol.
- To use when accessing the server using the HTTP protocol.
- Setting on the proxy server will be valid when this setting is “ON”.

B. Procedure

- The default setting is OFF.

ON “OFF”

12.17.4 HTTP Setting-Connect Proxy

A. Use

- To set whether or not to connect via proxy server when accessing the server.
- To use when accessing the server via proxy server.

B. Procedure

- The default setting is OFF.

ON “OFF”

12.17.5 HTTP Setting-Proxy Server

A. Use

- To set the address and the port number for the proxy server.
- To use when accessing the server via proxy server.

B. Procedure

<Server Address>

- Enter an address using IPv4, IPv6, or FQDN format.

<Port Number>

- Enter the value between 1 and 65535 using the 10-key pad.
  (The default setting is 80)

12.17.6 HTTP Setting-Proxy Authentication

A. Use

- To set the login name or password when authentication is necessary for accessing the proxy server.
- To use when authentication is necessary for accessing the proxy server.

B. Procedure

<Authentication>

- The default setting is OFF.

ON “OFF”

<Log-in Name>

- Enter the login name (up to 32 one-byte characters) on the on-screen keyboard.

<Password>

- Enter the password (up to 32 one-byte characters) on the on-screen keyboard.

12.17.7 HTTP Setting-Connection Time-Out

A. Use

- To set the time for the timeout for accessing the server.

B. Procedure

- The default setting is 60 sec.

30 to 300 sec.

12.17.8 FTP Setting

- It will be displayed only when [Internet ISW Set] is set to “ON”.

12.17.9 FTP Setting-Data Input Setting

A. Use

- To set whether or not to enable downloading using FTP protocol.
- To use when accessing the server with FTP protocol.
- Setting this to “ON” will enable the proxy server setting.

B. Procedure

- The default setting is ON.

“ON” OFF

12.17.10 FTP Setting-Connect Proxy

A. Use

- To set whether or not to access the server via proxy server.

B. Procedure

- The default setting is OFF.

ON "OFF"

12.17.11 FTP Setting-Proxy Server

A. Use

- To set the address and the port No. of the proxy server.

B. Procedure

<Server Address>

- Enter an address using IPv4, IPv6, or FQDN format.

<Port Number>

- Enter the value between 1 and 65535 using the 10-key pad.

12.17.12 FTP Setting-Connection Setting

A. Use

- To set the port No. and the time for timeout when accessing the FTP server, and also to set whether or not to enable PASV mode.
- To use when accessing the FTP server.
- To use when connecting by the PASV (passive) mode (FTP server side will inform the connection port before connecting).

B. Procedure

<Port Number>

- Enter the value between 1 and 65535 using the 10-key pad.

<Connection Time Out>

- Enter the value between 1 and 60 (min.) using the 10-key pad.

<PASV Mode>

- The default setting is OFF.

ON "OFF"

12.17.13 Forwarding Access Setting-User ID

A. Use

- To register the user ID for accessing the program server where firmware is to be stored.

B. Procedure

1. Select [User ID].
2. Enter the user ID (up to 64 one-byte characters) on the on-screen keyboard.

12.17.14 Forwarding Access Setting-Password

A. Use

- To register the password for accessing the program server where firmware is to be stored.

B. Procedure

1. Select [Password].
2. Enter the password (up to 64 characters) on the on-screen keyboard.

12.17.15 Forwarding Access Setting-URL

A. Use

- To register the address and directory of the program server where the firmware is to be stored in URL.

B. Procedure

1. Select [URL].
2. Enter the URL (up to 256 one-byte characters) on the on-screen keyboard.

NOTE

- **Enter the URL which format suits the protocol to be used.**
  When connecting to http http:// (Host name or IP address)/ directory name or https:// (Host name or IP address)/directory name.
  When connecting to ftp ftp:// (Host name or IP address) / directory name.

12.17.16 Forwarding Access Setting-FileName

A. Use

- To register the file name of the firmware data to be downloaded.

B. Procedure

1. Select [FileName].
2. Enter the file name (up to 63 one-byte characters) on the on-screen keyboard.

12.17.17 Download

A. Use

- Access the program server according to the Internet ISW setting, and download the firmware.
- To use when updating the firmware via network.

B. Procedure

1. Select [Download].
2. Touch [ISW Start] to start downloading the firmware.
3. The message to show the status will be displayed on the screen while connecting and transferring data.

NOTE

- **When it failed to connect to the program server, or failed to download, the error code and the message will be displayed. Check the cause of the error by the error code, and follow the message for resetting.**
  Refer to “Error cord list” for the error codes.
  See P.153

- When the firmware is normally upgraded, the main body will automatically be restarted to complete the Internet ISW.

13. ENHANCED SECURITY

13.1 List of Enhanced Security

Service Mode		Ref. Page
Enhanced Security	CE Password	P.546
	Administrator Password	P.546
	Administrator Feature Level	P.547
	CE Authentication	P.547
	Life Stop Setting	P.548
	NVRAM Data Backup	P.548
	Operation Ban release time	P.548
	Administrator unlocking	P.549
	Engine FW DipSW	P.549

13.2 Starting/Exiting

13.2.1 Starting procedure

1. Call the Service Mode to the screen.
2. Press the following keys in this order.
   Stop → 0→ Clear
3. Enhanced Security menu will appear.

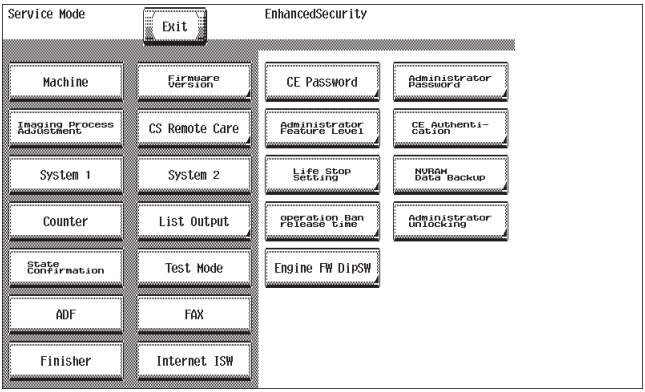

A1UDF3E025DA

13.2.2 Exiting procedure

- Touch the [Exit].

13.3 Enhanced Security

13.3.1 CE Password

A. Use

- To set and change the CE password.

B. Procedure

- Enter the CE password (8 digits) on the on-screen keyboard.
- The initial setting is “92729272.”

Current Password	: Enter the currently using CE password.
New Password	: Enter the new CE password.
Re-Input Password	: Enter the new CE password again.

NOTE

- **When the following setting leads to the Password Rules [ON], the password with the same letters as well as the password which is same as the previous one cannot be changed.**
  [Administrator Settings] → [Security Settings]
- **NEVER forget the CE password. When forgetting the CE password, call responsible person of KMBT.**

13.3.2 Administrator Password

A. Use

- To set and change the administrator password.
- Use this function when the administrator forget the administrator password because a new password can be set without entering the current administrator password with this.

B. Procedure

- Enter the administrator password (8 digits) on the on-screen keyboard.
- The initial setting is “12345678.”

New Password	: Enter the new administrator password.
Re-Input Password	: Enter the new administrator password again.

NOTE

- **When the following setting leads to the Password Rules [ON], the password with the same letters, the password which is same as the previous one and the password of less than eight digits cannot be changed.**
  [Administrator Settings] → [Security Settings]

13.3.3 Administrator Feature Level

A. Use

- To set which modes to be allowed for the administrator to use in Service Mode.
- Use when allowing the administrator to use some modes in Service Mode.
- The modes allowed for the administrator to use in each setting are as follows.

Administrator settings function			Level 1	Level 2
[System Setting] → [Expert Setting]	Printer Adjustment	Erase Leading Edge	—	❍
	Scanner Adjustment	Leading Edge Adjustment	—	❍
		Centering	—	❍
		Horizontal Adjustment	—	❍
		Vertical Adjustment	—	❍
	ADF Adjustment	Centering	—	❍
		Original Stop Position	—	❍
		Centering Auto Adjustment	—	❍
		Auto Adj. of Stop Position	—	❍
	User paper Settings		—	❍
[Standard Size Setting]	Original Glass Original Size Detect		—	❍
	Foolscap Size Setting		—	❍

B. Procedure

- The default setting is Prohibit.

Level1 Level2 “Prohibit”

13.3.4 CE Authentication

- It will not be displayed when the following settings are set to “ON”.
  [Administrator Settings] → [Security Setting] → [Enhanced Security Mode] or [Password Rules].

A. Use

- To determine whether or not to authenticate CE password as entering Service Mode.
- Use when authenticating CE password as entering Service Mode.

NOTE

- **For setting the following setting to “ON”, set the CE Authentication to “ON” and change the initial CE password beforehand.**
  [Administrator Settings] → [Security Setting] → [Enhanced Security Mode] or [Password Rules]

B. Procedure

- The default setting is OFF.

ON “OFF”

13.3.5 Life Stop Setting

A. Use

- To select whether or not to stop a print cycle when the drum unit, developing unit, developer or fusing unit reaches its service life.

B. Procedure

- The default setting is Stop.

"Stop"	No Stop

13.3.6 NVRAM Data Backup

A. Use

- To backup NVRAM data in the main body to the flash memory.
- To backup current data in order to prevent data in NVRAM from being erased unexpectedly.
- To backup data manually. It usually makes backup every hour automatically.
- Backup data can be restored by following the specified procedure when the trouble (CD3XX) occurred.
- Refer to "TROUBLESHOOTING" for details on restoration procedure.
  See P.680

B. Procedure

1. Touch [NVRAM Data Backup].
2. Touch [Start] to start making a backup.
3. Check the message [Backup is completed.], and turn main power switch OFF. Wait for ten seconds or more and turn main power switch back ON.

13.3.7 Operation Ban release time

A. Use

- To set the time that elapses before the machine releases an access lock that is activated after the CE password authentication.
- To set the period of time that elapses before the machine releases the access lock, which aims to prevent the unintentional release of the access lock.
- After the CE password authentication, if the access lock is activated, the lock release timer starts to operate by input the Stop → 0 → 9 → 3 → 1 → 7 in [Meter Count] → [Check Details] → [Coverage Rate] after the main power switch is turned OFF and On. When the timer reaches the time specified in this setting, the access lock is released.

B. Procedure

- The default setting is 1 (minutes).

"1" to 60 (minutes)

NOTE

- **When Enhanced Security Mode is set to ON in [Administrator Settings] → [Security Settings] → [Enhanced Security Mode], the period of time that can be set in this setting is 5 minutes or more.**

13.3.8 Administrator unlocking

A. Use

- To release an access lock that is activated after an administrator password authentication.
- To release the access lock with service authority when an administrator password authentication fails and the access lock is activated.
- When the main power switch is turned OFF and ON or the period of time set in the Release Time Settings elapses, the machine releases the access lock that is activated after the administrator password authentication.
  In addition to these operations, this setting provides another way to release the access lock.

B. Procedure

1. Touch [Administrator unlocking].
2. Touch [unlocking] to release an access lock.
3. When [OK] is displayed, touch [OK].

13.3.9 Engine FW DipSW

A. Use

- Not used.

14. BILLING SETTING

14.1 List of billing setting

Service Mode			Ref. Page
Billing Setting	Counter Setting		P.551
	Management Function Choice		P.552
	Coverage Rate Clear		P.560
	License Management	Activation	*1
		Deactivation	
		Repair	
		Initialize	
		Request Code	
		List	
		Function List	
	OpenAPI Authentication Management	Restriction Code	P.561
		Region Code	P.561

*1: For details, see the LK-101 v2/102/103 v2/105 service manual.

14.2 Starting/Exiting

14.2.1 Starting procedure

1. Call the Service Mode to the screen.
2. Press the following keys in this order.
   Stop → 9
3. Billing Setting menu will appear.

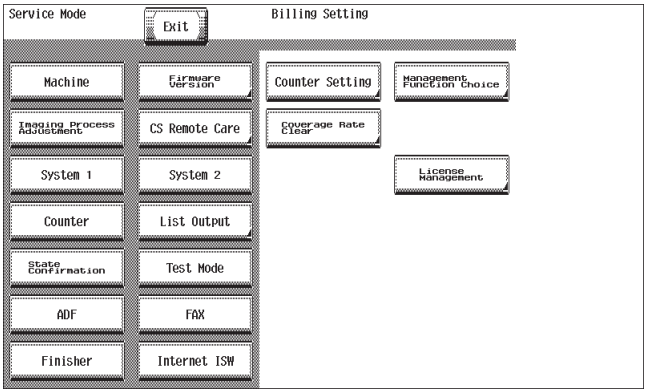

A0P0F3E557DA

14.2.2 Exiting procedure

- Touch the [Exit].

14.3 Billing Setting

14.3.1 Counter Setting

A. Use

- To set the counting method for the total counter and size counter.
- To set the size regarded as the large size (2 counts.)
- Use to change the counting method for the counters.

B. Procedure

(1) Total Counter

Mode 1 : 1 count per 1 copy cycle (Default: Japan)
Mode 2 : Large size is double counts
(Default: US, Europe, Others 1, Others 2, Others 3, Others 4)

NOTE

- **The content of this setting is reflected in the count method with the key counter.**
- **"Others 1" to "Others 4" are setting items in [Marketing Area] available from Service Mode.**
  See P.417

(2) Size Counter

- A3/11 x 17 : When it exceeds 279 mm in the main scan direction and 420 mm in the sub scan direction (exceeds 399 mm at fax scan), it is regarded as the large size.
- A3/B4/11 x 17/8 1/2 x 14 : When it exceeds 215 mm in the main scan direction and 355 mm in the sub scan direction (exceeds 337 mm at fax scan), it is regarded as the large size.
- A3/11 x 17/B4/8 1/2 x 14/Foolscap : When it exceeds 203 mm in the main scan direction and 330 mm in the sub scan direction (exceeds 313 mm at fax scan), it is regarded as the large size (However the size in the main scan direction changes according to the foolscap size setting.)

- Not counted (Default: Japan)
- A3 and 11 x 17 (Default: US)
- A3, B4, 11 x 17, and 8 1/2 x 14 (Default: Europe, Others 1, Others 2, Others 3, Others 4)
- A3, B4, Foolscap, 11 x 17, 11 x 14, and 8 1/2 x 14

NOTE

- **When the Size Counter setting is set to "Not counted", the machine operate with following conditions regardless of the each control panel settings.**
  Total Counter: Mode1

✻ Count-up table

Print mode	1-Sided				2-Sided			
Size	Sizes other than those specified		Specified sizes		Sizes other than those specified		Specified sizes	
Mode	Mode		Mode		Mode		Mode	
	1	2	1	2	1	2	1	2
Total	1	1	1	2	2	2	2	4
Size	0	0	1	1	0	0	2	2
2-sided Total	0	0	0	0	1	1	1	1

0: No count; 1: 1 count; 2: 2 counts; 3: 3 counts; 4: 4 counts

14.3.2 Management Function Choice

- To set whether or not the following items are to be mounted.
  Key Counter, Management Device (Data controller), Authentication Device, or Vendor

NOTE

- **It will not be displayed when the following setting is set to "ON".**
  [Administrator Settings] → [Security Setting] → [Enhanced Security Mode]
- **When the setting shows that [Management Device 1], [Management Device 2] or [Vendor 2] is mounted, the following applications will be invalid.**
  PC FAX transmission / HDD TWAIN/PS Box Operator / PS Scan Direct / PS Job Spooler / Fiery: Scan to Box
  Also, the following setting will be set to "Disable".
  [Administrator Settings] → [Security Setting] → [Management Function Setting] → [Network Function Setting]

14.3.3 Management Function Choice-Key Counter IF Vendor

- Not used

14.3.4 Management Function Choice-Authentication Device 1

A. Use

- To set whether or not the authentication device 1 is installed.
- Set when the authentication device 1 (PageACSES) is mounted.

B. Procedure

NOTE

- **The setting is available only when user authentication and account track are set "OFF" with [Administrator Settings] → [User Authentication/Account Track] → [General Setting].**
- **When the Authentication Device mount setting is set to "mount", make sure that the [IP Address Fax] and [Internet Fax] settings are set to "OFF" with [Service Mode] → [System 2] → [Network Fax Settings].**

14.3.5 Management Function Choice-Authentication Device 2

A. Use

- To set whether or not the authentication device 2 is installed.
- Set when the authentication unit (biometric type or card type) is mounted.

  Card 1 : Uses IC card authentication system (AU-201)
  Card 2 : Uses loadable device card authentication system
  Bio1 : Uses biometrics (finger vein) authentication system (AU-101)
  Bio2 : Uses biometrics (finger vein) authentication system (AU-102)

- When selecting [Bio1], set a film timeout interval.
- When selecting [Bio2], set a film timeout interval, capture trial time and authentication trial time.
- When selecting [Card 1] or [Card 2], a response timeout interval is displayed. (The interval is unchangeable.)
- When the setting is set to Card 2, the main power switch must be turned OFF and ON to let the new setting take effect.
- Selecting Card 2, a loadable device driver allows to install.

B. Procedure

<Authentication Mode>

Card 1 Card 2 Bio1 Bio2

(1) Installing method of the loadable device driver

- The firmware is updated using the USB memory device.

NOTE

- **NEVER remove or insert the USB memory device with the machine power turned ON.**

1. Prepare a USB memory device on which the driver data of the loadable device to be used was written.
2. Turn OFF the main power switch.
3. Remove the screw [1].
4. Lift up the cover [2] of the service port.
5. Insert the USB memory device to the service port [3].

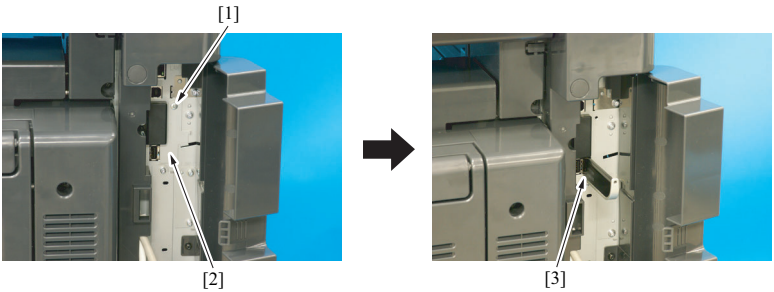

A1UDF2C173DA

NOTE

- **USB memory must be connected with the main power switch/sub power switch off.**
- **When updating the firmware, use the service port.**
  It cannot be updated when connected to another USB port.

6. Turn ON the main power switch and the sub power switch.
7. Select [Yes] on the loadable device driver installation screen.

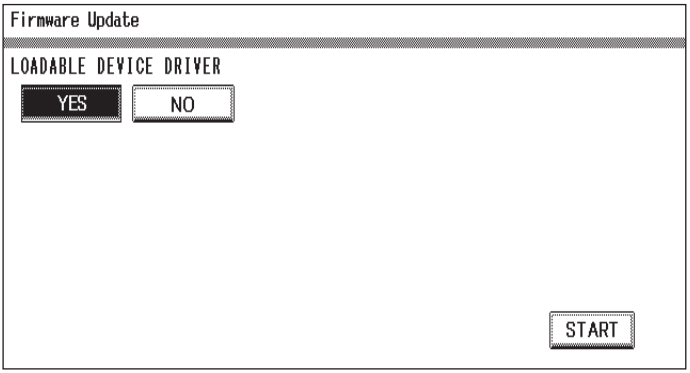

A00JF3C543DA

8. Press the [START] to start installing the driver.
(At this time, the Start key starts blinking red.)
9. Check that the control panel shows the message indicating that the data has been installed correctly ([Downloading Completed]). Check also the check sum value ([Check Sum ####]) shown on the control panel. (The Start key lights blue.)
10. Turn OFF the main power switch.
11. Remove the USB memory device from the port.
12. Turn ON the main power switch and sub power switch.

14.3.6 Management Function Choice-Key Counter Only

A. Use

- To set whether or not the key counter is installed.
- Set when the key counter is mounted.
- Select [Message] when the key counter is mounted.

✻ Color Mode

- Not used.

✻ Message

Select the message type when the administrative unit is mounted.

Type 1: Message for key counter
Type 2: Message for card scanning
Type 3: Message for ID management
Type 4: Message for remote SW

✻ Confirmation copy

- Set whether to allow a confirmation copy when a key counter is installed.
- The default setting is Ban.

License	“Ban”

✻ The next job reservation

- Set whether to allow the reservation of the next job when a key counter is installed.
- The default setting is Ban.

License	“Ban”

NOTE

- **The setting is available only when user authentication and account track are set “OFF” with [Administrator Settings] → [User Authentication/Account Track] → [General Setting].**

✻ Count Setting

- To set the count timing used when the key counter is installed.
- The default setting is paper feed.

“Paper feed”	Paper out

14.3.7 Management Function Choice-Management Device 1

A. Use

- To set whether or not the management device 1 is installed.

B. Procedure

NOTE

- **The setting is available only when user authentication is set "OFF" and account track is set "Off" or "Account Name + Password" with [Administrator Settings] → [User Authentication/Account Track] → [General Settings].**

14.3.8 Management Function Choice-Management Device 2

A. Use

- To set whether or not the management device 2 is installed.

B. Procedure

✻ Management Setting

- Select the Management Setting Mode
  Mode 1: Use contact type device (Logout with ID key is not allowed.)
  Mode 2: Use non-contact type device (Logout with ID key is allowed.)

NOTE

- **The setting is not available when either "External Server" of user authentication, "Password Only" of account track, "Do not synchronize" of user authentication and account track or "Allow" of public user access has been set with [Administrator Settings] → [User Authentication/Account Track] → [General Settings].**

14.3.9 Management Function Choice-Vendor 1

- Not used.

14.3.10 Management Function Choice-Vendor 2

A. Use

- To set whether or not the vendor 2 is installed.

NOTE

- **When using the vendor along with the key counter, inserting the key counter will set it to the "Key Counter Mode" and removing it will set it to the "Vendor Mode".**

B. Procedure

- Select message of key counter.
  (Only for key counter, the type of the message is same after mounting.)

✻ Confirmation copy

- Set whether to allow a confirmation copy when a key counter is installed.
- The default setting is Ban.

License	"Ban"

✻ The next job reservation

- Set whether to allow the reservation of the next job when a key counter is installed.
- The default setting is Ban.

License	"Ban"

- Select message of vendor.

✻ Message

Type 1: Message for key counter
Type 2: Message for card scanning
Type 3: Message for ID management

NOTE

- **The setting is available only when user authentication and account track are set "OFF" with [Administrator Settings] → [User Authentication/Account Track] → [General Setting].**

✻ Count Setting

- To set the count timing used when the key counter is installed.
- The default setting is paper feed.

"Paper feed" Paper out

NOTE

- **Performing the setup for each unit to be mounted will internally change the setting values below. It needs resetting when cancelling the setting in order to set back to "not mounted" because the setting value will remain.**

<When the vendor2 or authentication device 1/2 is mounted>

	Setting Item	Vendor 2	Authentication Device 1	Authentication Device 2
Utility	Default Copy Settings	Factory Default		—
	Default Scan/Fax Settings	Factory Default		—
	Copy Operating Screen	[Yes]		—
	Fax Active Screen	Tx/Rx Display [Yes]		—
	Scan/Fax Settings Default Tab	Direct Input	—	—
	Left Panel Display Default	[Job List]		—
Administrator Settings	Each Function Setting	Copy, PC print, Send Data, and Print others will be set to "ON".		
	Network Function Usage Settings	OFF	—	—
	Administrator Security Level	Prohibit		—
	Weekly Timer ON/OFF Setting	OFF	—	—
	Reset Setting	—	Reset Data After Job will be set to "ON".	—
	Application Key Settings	When Key 1 is set to My Panel, reset the setting and assign Key 1 to [FAX/SCAN]. When Key 2 is set to My Panel, reset the setting and assign Key 2 to [Copy].		—
	Restrict Access to Job Settings	Changing Job Priority, Deleting Other User's Jobs, Registering and Changing Addresses, Changing Zoom Ratio will be set to "Restrict".		—
	External Memory Function Settings	—	Save Document and Print Document will be set to "OFF".	
	Skip Job Operation Settings	All settings be set to "Yes".	—	—
	ID & Print Settings	—	—	ID & Print will be set to "ON".
	Forward TX Setting	OFF		—
	Memory RX Setting	Password for Memory RX Setting is set to the default value of the administrator password	—	—
	PC-Fax RX Setting	Restrict	—	—
	TSI User Box Setting	No	—	—
	OpenAPI Setting	Access Setting will be set to "Restrict" and Authentication will be changed to "OFF" setting.	Access Setting will be set to "Restrict".	—
	IPP Setting	—	IPP Setting will be set to "OFF", and Accept IPP job will be set to "OFF".	—
	AppleTalk Setting	—	OFF	—
	SMB Setting	—	Scan Setting, Print Setting will be set to "OFF".	—
	E-mail TX (SMTP)	—	E-mail TX Setting, Scan to E-mail, E-mail Notification, Meter Count Notification will be set to "Restrict".	—

	Setting Item	Vendor 2	Authentication Device 1	Authentication Device 2
Administrator Settings	E-mail RX (POP)	—	E-mail RX Setting will be set to “OFF”.	—
	LDAP Settings	—	Enabling LDAP will be set to “OFF”.	—
	Prefix/Suffix Setting	—	Prefix/Suffix Setting will be set to “OFF”.	—
	WebDAV Client Settings	—	WebDAV Client Settings will be set to “OFF”.	—
	Web Service Settings Printer setting/Scanner setting	Printer Setting and Scanner setting will be set to “OFF”.		—
	Status Notification Setting Notification Item Setting	—	All setting items will be set to “OFF”.	—
	Image Log Transfer Settings	[No]	—	—
Service Mode	Bluetooth Settings	—	Bluetooth Settings will be changed to “Invalid.”	—
	Software Switch Setting	SW No. 63 will be changed to 01 (HEX).	—	—
	Management function choice	Confirmation copy will be set to “Ban”.	—	—
	FAX	[System] → [Display Setting] → [Re-Transmission] will be set to “OFF”.	—	—

<When the key counter IF vendor or management device 1/2 is mounted>

	Setting Item	Key counter IF Vendor	Management Device 1	Management Device 2
Utility	Default Copy Settings	Factory Default	—	—
	Default Scan/Fax Settings	Factory Default	—	—
	Copy Operating Screen	[Yes]	—	—
	Fax Active Screen	Tx/Rx Display [Yes]	—	—
	Scan/Fax Settings Default Tab	Direct Input	—	—
	Left Panel Display Default	[Job List]	—	—
Administrator Settings	Each Function Setting	Copy, PC print will be set to “ON”. Send Data, Print others will be set to “OFF”.	Copy will be set to “ON”. PC print, Send Data, and Print others will be set to “OFF”.	Copy, PC print, Send Data, and Print others will be set to “ON”.
	Network Function Usage Settings	OFF		
	Administrator Security Level	Prohibit	—	—
	Weekly Timer ON/OFF Setting	OFF	—	—
	Application Key Settings	—	—	When Key 1 is set to My Panel, reset the setting and assign Key 1 to [FAX/SCAN]. When Key 2 is set to My Panel, reset the setting and assign Key 2 to [Copy].
	Restrict Access to Job Settings	Changing Job Priority, Deleting Other User’s Jobs, Registering and Changing Addresses, Changing Zoom Ratio will be set to “Restrict”.	—	—

	Setting Item	Key counter IF Vendor	Management Device 1	Management Device 2
Administrator Settings	External Memory Function Settings	—	—	—
	Forward TX Setting	OFF	—	—
	Memory RX Setting	Password for Memory RX Setting is set to the default value of the administrator password	—	—
	PC-Fax RX Setting	Restrict	—	—
	TSI User Box Setting	No	—	—
	OpenAPI Setting	Access Setting will be set to “Restrict” and Authentication will be changed to “OFF” setting.	—	—
	Apply Stamps/Stamp	No	—	—
	Apply Stamps/Copy Protect	No	—	—
	Apply Stamps/Stamp Repeat	No	—	—
	Apply Stamps/Copy Protect	No	—	—
	Apply Stamps/Page Number	No	—	—
	Apply Stamps/Date/Time	No	—	—
	Web Service Settings Printer setting/Scanner setting	Printer Setting and Scanner setting will be set to “OFF”.		
	Image Log Transfer Settings	[No]	—	—
Service Mode	Software Switch Setting	SW No. 63 will be changed to 01 (HEX).	—	—
	Management function choice	Confirmation copy will be set to “Ban”.	—	—
	FAX	[System] → [Display Setting] → [Re-Transmission] will be set to “OFF”.	—	—

14.3.11 Coverage Rate Clear

A. Use

- To clear the coverage rate.

B. Procedure

- The default setting is Unset.

Set “Unset”

- Touching [END] key will clear the coverage rate.

14.3.12 OpenAPI Authentication Management-Restriction Code

A. Use

- These are communication settings for the application which is developed by the third vendor.
  Do not set or change these settings without vendor's instructions.

14.3.13 OpenAPI Authentication Management-Region Code

A. Use

- These are communication settings for the application which is developed by the third vendor.
  Do not set or change these settings without vendor's instructions.

15. CONTENTS TO BE CLEARED BY RESET FUNCTION

Function for clearing / Contents to be cleared		Right door open/close	Main power switch OFF/ON	Trouble reset	Initialize						
							Clear All Data				
					System Error Clear	Clear All Data	Job Memory Setting Data	Address Registration Data	Fax Setting Data	All History Data	Network Setting Data
Jam display		❍	—	—	❍	❍	—	—	—	—	—
Malfunction display	Rank A	—	—	❍	❍	❍	—	—	—	—	—
	Rank B	❍	—	❍	❍	❍	—	—	—	—	—
	Rank C	—	❍	❍	❍	❍	—	—	—	—	—
Erratic operation / display		—	❍	—	❍	❍	—	—	—	—	—
Utility Mode (Except items on engine adjustment)		—	—	—	—	❍	—	—	—	—	—
Job memory setting data		—	—	—	—	❍	❍	—	—	—	—
Address registration data		—	—	—	—	❍	—	❍	—	—	—
Fax setting data (Excluding destination-related data)		—	—	—	—	❍	—	—	❍	—	—
History data (Job history, Journal history, Receive reject history, Destination history, Job secure counter)		—	—	—	—	❍	—	—	—	❍	—
Network setting data (Excluding destination-related data)		—	—	—	—	❍	—	—	—	—	❍
Service Mode (System 1/2)		—	—	—	—	❒ *1	—	—	—	—	—
Billing Setting	Management Function Choice	—	—	—	—	❍	—	—	—	—	—
Adjustment of the touch panel position		—	—	—	—	❍	—	—	—	—	—
Toner counter		—	—	—	—	❍	—	—	—	—	—

❍ : Will be cleared (initialized)
— : Will not be cleared

❒ *1: Items to be cleared	
System 1	Marketing Area (Fax Target only)
System 2	HDD
	Image Controller Setting

16. MECHANICAL ADJUSTMENT

16.1 Mechanical adjustment of the scanner section

16.1.1 Adjustment of the scanner motor belt

This adjustment must be made in the following case:

- **The scanner motor assy has been removed.**
- **The scanner drive cables have been rewound.**

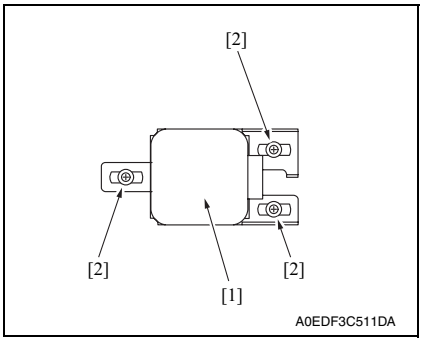

1. Temporarily secure the scanner motor assy [1] with three screws [2].

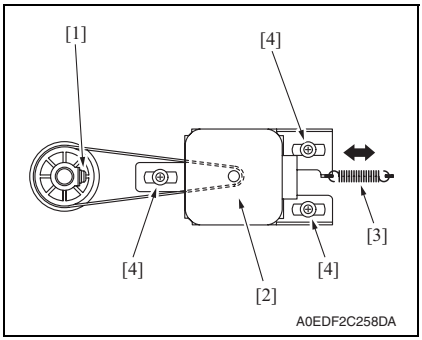

2. With the scanner drive gear set screw [1] located on the right-hand side as shown on the left, slide the scanner motor assy [2] to the left and check that it is returned to the original position by the tension of the spring [3].
   Perform this step three times.
3. Tighten the three screws [4] to fix the scanner motor assy into position.

16.1.2 Positioning of the exposure unit and mirrors unit

This adjustment must be made in the following case:

- **The scanner drive cables have been rewound**

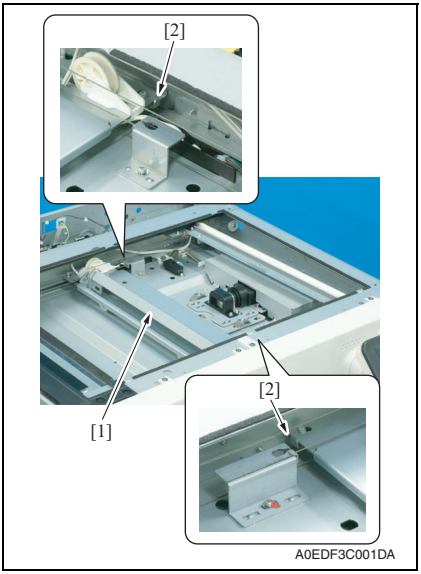

1. While temporarily attaching the exposure unit to the scanner drive cables, move the mirrors unit [1] to the center and hit the mirrors unit against the side of the rails [2].

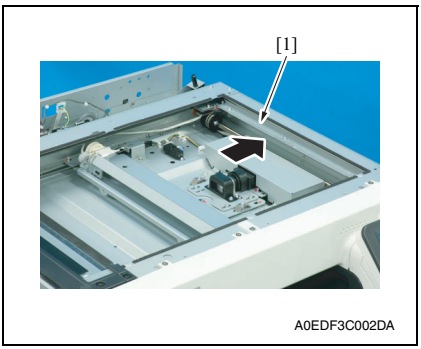

2. While keeping the mirrors unit hit against the side of the rail, move the temporarily attached exposure unit [1] to the right on the scanner frame as far as the exposure unit will go.

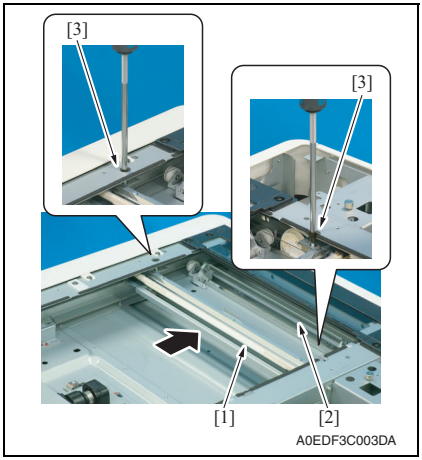

3. Slowly move the exposure unit [1] and the mirrors unit [2] until they reach the position [3] where you can insert the screws into the exposure unit.

NOTE

- **Be careful so that the temporarily attached exposure unit and the mirrors unit do not become out of position.**

4. Tighten the screws to fix the exposure unit [1].

16.2 Mechanical adjustment of the paper feed section

16.2.1 Skew adjustment of the tray 1/2

This adjustment must be made in the following case:

- **To reduce paper skew that cannot be corrected by the registration loop adjustment when the tray 1 or 2 is within the specifications.**

1. Pull out the tray where this adjustment is made.

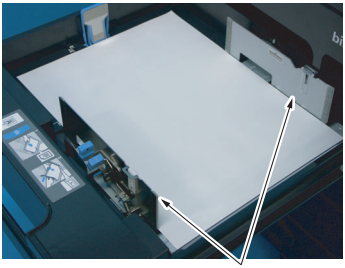

A1UDF3C030AA

2. Load the tray with the paper.

3. Move the set of the paper guides [1] until no gap is produced between the both ends of paper and the paper guides.

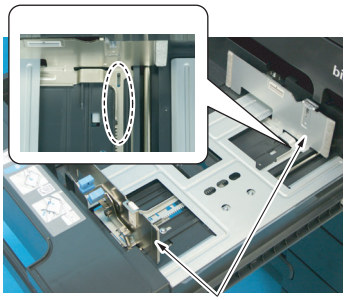

A1UDF3C031AA

4. Remove the paper from the tray.

5. Secure the set of paper guides [1] on the tray using a screw (M3 x 8 mm: V121 0308 04).

16.2.2 Centering adjustment of the tray 1/2

This adjustment must be made in the following case:

- **When an image printed on a copy is displaced from the correct position with the use of the tray1/2.**

1. Make a test print and check the amount of misalignment.
2. Pull out the tray where this adjustment is made.

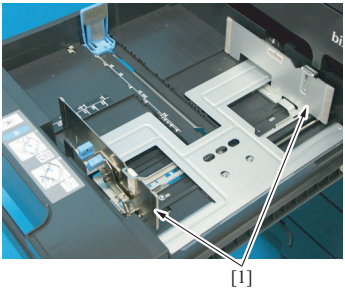

A1UDF3C032AA

3. Stretch the paper guides [1] to the maximum size position.

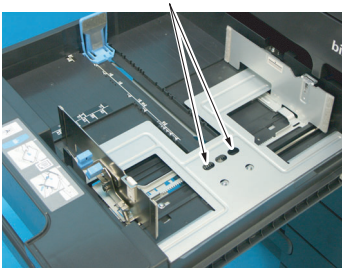

A1UDF3C033AA

4. Loosen two screws [1].

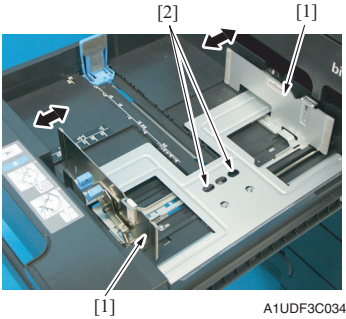

A1UDF3C034AA

5. Move the paper guides [1] complete according to the amount of the mis-centering you checked in step 1 and adjust the center position of it.
6. Tighten two screws [2].
7. Make another test print and check the amount of misalignment.

16.2.3 Adjustment of the bypass paper size unit

This adjustment must be made in the following case:

- **The bypass paper size unit has been removed.**

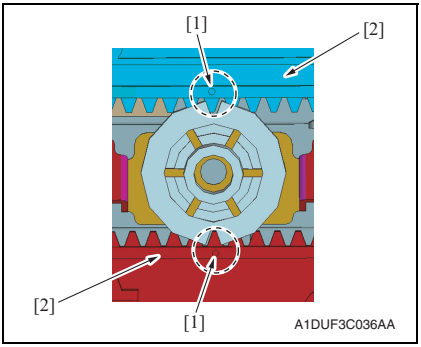

1. Align the match mark [1] on the bypass guide rack gear with the groove on the gear rim at two places and install two bypass guide rack gears [2].

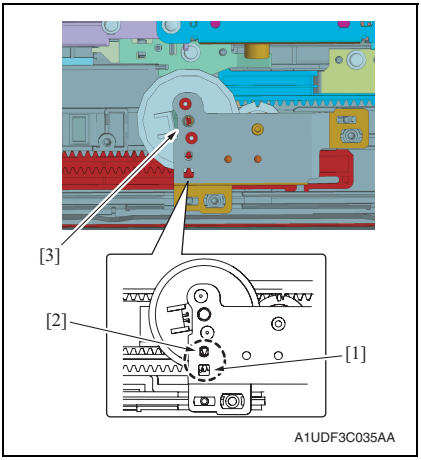

2. When installing the manual CD size sensor assy [3], make sure that the part [1] (pointed by the arrow) on the bypass guide rack gear and the gear's hole [2] on the manual CD size sensor assy are placed in a straight line.
3. Secure the manual CD size sensor assy with two screws.

4. After the bypass paper size unit base has been mounted, check that the lever of the bypass paper size unit moves smoothly in a manner operatively connected to the bypass guide.
5. Call the Service Mode to the screen and select [Machine] → [Manual Bypass Tray Width Adj]. Then, carry out manual bypass tray width adjustment.
See P.376

TROUBLESHOOTING

17. JAM DISPLAY

- When the paper jam occurred, the message, the position jam occurred (number blinks), position of the remaining paper (number lights up), and the JAM code are displayed.

NOTE

- **JAM code is displayed on the jam warning screen only when the following setting is set to "Display."**
  [Service Mode] → [System 2] → [JAM Code Display Setting]

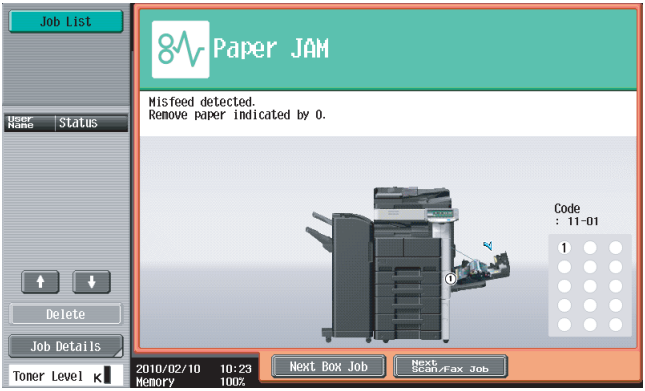

A1UDF4E019DA

17.1 List of JAM code

JAM code	JAM type	Detection timing	Misfeed processing location	Ref. page
10-01	Manual bypass feed section	• The leading edge of the paper does not unblocked or turn ON the tray 2 vertical transport sensor (PS28) even after the lapse of a given period of time after the manual bypass starts to feed paper.	Right door	P.586
10-40		• For paper fed from the manual bypass, the image write start signal permit continues to be disabled for a predetermined period of time after the timing of the image write start signal output.		
—	Manual bypass feed section	• In case paper position is detected as locating properly after main power switch is turned ON, door and cover are opened / closed or jam/trouble reset is done, it is regarded as paper jam at manual bypass feed section.	Right door	P.586

JAM code	JAM type	Detection timing	Misfeed processing location	Ref. page
11-01	Tray 1 feed section	• The leading edge of the paper does not unblocked the registration sensor (PS1) even after the lapse of a given period of time after the tray 1 starts to feed paper.	Right door Tray 1	P.587
11-44		• At the start of paper feed retry, the registration sensor (PS1) has already detected paper passage.		
—		• In case paper position is detected as locating properly after main power switch is turned ON, door and cover are opened / closed or jam/trouble reset is done, it is regarded as paper jam at tray 1 feed section.		
12-01	Tray 2 feed section	• The leading edge of the paper does not unblocked or turn ON the tray 2 vertical transport sensor (PS28) even after the lapse of a given period of time after the tray 2 starts to feed paper.	Right door Tray 2	P.587
12-40		• For paper fed from the tray 2, the image write start signal permit continues to be disabled for a predetermined period of time after the timing of the image write start signal output.		
—		• Tray 2 vertical transport sensor (PS28) is unblocked or turned ON when the main power switch is turned ON, a door or cover is opened and closed, or a misfeed or malfunction is reset.		
—	Tray 2 feed section	• In case paper position is detected as locating properly after main power switch is turned ON, door and cover are opened / closed or jam/trouble reset is done, it is regarded as paper jam at tray 2 feed section.	Right door Tray 2	P.587
13-01	Tray 3 feed section	• The leading edge of the paper does not block the tray 3 vertical transport sensor (PS36) even after the set period of time has elapsed after the tray 3 starts to feed paper.	Right door Tray 3	P.588
13-40		• For paper fed from the tray 3, image write start signal permit continues to be disabled for a predetermined period of time after the timing of image write start signal output.		
—		• The tray 3 vertical transport sensor (PS36) is turned ON when the main power switch is set to ON, a door or cover is opened and closed, or a misfeed or malfunction is reset.		

JAM code	JAM type	Detection timing	Misfeed processing location	Ref. page
—	Tray 3 feed section	• In case paper position is detected as locating properly after main power switch is turned ON, door and cover are opened / closed or jam/trouble reset is done, it is regarded as paper jam at tray 3 feed section.	Right door Tray 3	P.588
14-01	Tray 4 feed section	• The leading edge of the paper does not block the tray 4 vertical transport sensor (PS46) even after the set period of time has elapsed after the tray 4 starts to feed paper.	Right door Tray 4	P.588
14-40		• For paper fed from the tray 4, image write start signal permit continues to be disabled for a predetermined period of time after the timing of image write start signal output.		
—		• The tray 4 vertical transport sensor (PS46) is turned ON when the main power switch is set to ON, a door or cover is opened and closed, or a misfeed or malfunction is reset.		
—		• In case paper position is detected as locating properly after main power switch is turned ON, door and cover are opened / closed or jam/trouble reset is done, it is regarded as paper jam at tray 4 feed section.		
15-01	LCT feed section	• The leading edge of the paper does not turn ON the paper feed sensor (PS51) even after the set period of time has elapsed after the LCT starts to feed paper.	Right door	P.589
15-40		• For paper fed from the LCT, image write start signal permit continues to be disabled for a predetermined period of time after the timing of image write start signal output.		
15-43		• There is no response to the paper feed command sent to the LCT even after the set period of time has elapsed.		
—		• The paper feed sensor (PS51) is turned ON when the main power switch is set to ON, a door or cover is opened and closed, or a misfeed or malfunction is reset.		
—		• In case paper position is detected as locating properly after main power switch is turned ON, door and cover are opened / closed or jam/trouble reset is done, it is regarded as paper jam at LCT feed section.		

JAM code	JAM type	Detection timing	Misfeed processing location	Ref. page
17-08	LCT vertical transport section	• The paper feed sensor (PS51) is not turned OFF even after the lapse of a given period of time after PS51 has been turn ON.	Right door	P.589
17-21		• The vertical transport sensor (PS52) is not turned ON even after the lapse of a given period of time after the paper feed sensor (PS51) has been turn ON.		
17-22		• The vertical transport sensor (PS52) is not turned OFF even after the lapse of a given period of time after the PS53 has been turn ON.		
—		• The vertical transport sensor (PS52) is blocked when the main power switch is set to ON, a door or cover is opened and closed, or a misfeed or malfunction is reset.		
—		• In case paper position is detected as locating properly after main power switch is turned ON, door and cover are opened / closed or jam/trouble reset is done, it is regarded as paper jam at LCT vertical transport section.		
20-01	Vertical transport section	• The registration sensor (PS1) is not unblocked even after the lapse of a given period of time after the tray 2, tray 3 or tray 4 starts to feed paper.	Right door	P.589
20-11		• The tray 2 vertical transport sensor (PS28) is not unblocked or turned OFF even after the lapse of a given period of time after the paper has been blocked or turn ON the PS28.		P.589
20-12		• The tray 3 vertical transport sensor (PS36) is not unblocked even after the lapse of a given period of time after PS36 has been blocked by a paper.		P.588
20-13		• The tray 4 vertical transport sensor (PS46) is not unblocked even after the lapse of a given period of time after PS46 has been blocked by a paper.		P.588
20-21		• The tray 2 vertical transport sensor (PS28) is not blocked or turned ON even after the lapse of a given period of time after the tray 3, tray 4 or LCT starts to feed paper.		P.588
20-22		• The tray 3 vertical transport sensor (PS36) is not blocked even after the lapse of a given period of time after the tray 4 starts to feed paper.		P.588

JAM code	JAM type	Detection timing	Misfeed processing location	Ref. page
30-01	Image transfer section	• A sheet of paper does not block the registration sensor (PS1) after a predetermined period of time has elapsed since the sheet unblocks PS1.		P.590
30-03		• The leading edge of paper does not block the paper exit sensor (PS3) since the paper feeding is started.		
—		• The registration sensor (PS1) is unblocked when the main power switch is turned ON, a door or cover is opened and closed, or a misfeed or malfunction is reset.		
—		• In case paper position is detected as locating properly after main power switch is turned ON, door and cover are opened / closed or jam/trouble reset is done, it is regarded as paper jam at image transfer section.		
32-01	Exit section	• The duplex unit upper transport sensor (PS92) is not blocked even after the lapse of a given period of time after the switch-back operation is started.	Right door	P.590
32-05		• The paper exit sensor (PS3) is not unblocked even after the lapse of a given period of time after the paper has blocked PS3.		
32-31		• The paper exit sensor (PS3) is unblocked before the lapse of a given period of time after the paper has blocked the PS3.		
—		• The paper exit sensor (PS3) is blocked when the main power switch is turned ON, a door or cover is opened and closed, or a misfeed or malfunction is reset.		
—		• In case paper position is detected as locating properly after main power switch is turned ON, door and cover are opened / closed or jam/trouble reset is done, it is regarded as paper jam at exit section.		
66-01	ADF turnover section	• The document registration sensor (PS3) is not turned ON after a lapse of a given time after the reverse motion is started.	Left cover	P.591
66-11		• The document registration sensor (PS3) is not turned OFF after a lapse of a given time after the reverse registration motion is started.		
66-21		• The reading roller sensor (PS4) is not turned ON after a lapse of a given time after the document registration sensor (PS3) is turned ON during reverse transportation.		

JAM code	JAM type	Detection timing	Misfeed processing location	Ref. page
66-02	ADF paper feed section	• The separation roller sensor (PS2) is not turned ON after a lapse of a given time after the document feed motor (M2) is turned ON.	Left cover	P.591
66-12		• The size of the original on the tray detected by ADF does not match the size of the original detected by the main body.		
66-03	ADF transport section	• The separation roller sensor (PS2) is not turn OFF after a lapse of a given time after PS2 is turned ON.		P.592
66-13		• The document registration sensor (PS3) is not turned ON after a lapse of a given time after the separation roller sensor (PS2) is turned ON.		
66-23		• The document registration sensor (PS3) is not turned OFF after a lapse of given time after the separation roller sensor (PS2) is turned OFF.		
66-33		• The reading roller sensor (PS4) is not turned ON after a lapse of a given time after the document registration sensor (PS3) is turned ON.		
66-04	ADF paper exit section	• The document exit sensor (PS5) is not turned ON after a lapse of a given time after the reading roller sensor (PS4) is turned ON.		P.592
66-14		• The document exit sensor (PS5) is not turned OFF after a lapse of a given time after the reading roller sensor (PS4) is turned OFF.		
66-24		• The document exit sensor (PS5) is not turned ON after a lapse of a given time after the reading roller sensor (PS4) is turned ON during reverse motion.		
66-34		• The document exit sensor (PS5) is not turned OFF after a lapse of a given time after the reading roller sensor (PS4) is turned OFF during reverse transportation.		

JAM code	JAM type	Detection timing	Misfeed processing location	Ref. page
66-05	ADF image reading section	• The document exit sensor (PS5) is not turned OFF after a lapse of a given time after the reading roller sensor (PS4) is turned OFF during 1st side transportation.	Left cover	P.593
66-15		• The reading roller sensor (PS4) is not turned OFF after a lapse of a given time after the document registration sensor (PS3) is turned OFF after the reverse registration motion is started.		
66-06		• The reading roller sensor (PS4) is turned ON earlier than a given time after the PS4 is turned OFF during original transportation.		
66-07		• Due to a remaining sheet of paper that has not been detected by sensors, before the start of a job, a sensor detects the sheet at an unexpected timing.		
72-14	FS transport section	<When FS-527 is installed> • The saddle path sensor (PS11) is not turned ON even after the set period of time has elapsed after the lower path sensor (PS9) is turned ON by the paper.	Front door	P.593
72-15		<When FS-527 is installed> • The saddle path sensor (PS11) is not turn OFF even after the set period of time has elapsed after it turns ON.		P.594
72-16		<When FS-527 is installed> • The paper passage sensor/1 (PS1) is not turned ON even after the set period of time has elapsed after the copier's exit sensor (PS3) is turned ON by the paper. • The paper passage sensor/1 (PS1) is not turned OFF even after the set period of time has elapsed after it is turned ON by the paper.	Horizontal conveyance cover	P.594

JAM code	JAM type	Detection timing	Misfeed processing location	Ref. page
72-16	Job separator transport section	<When JS-505 is installed> • The lower tray exit sensor (PS1) is not turned ON even after the set period of time has elapsed after the copier's paper exit sensor (PS3) is turned ON by the paper. • The upper tray exit sensor (PS2) is not turned ON even after the set period of time has elapsed after the copier's paper exit sensor (PS3) is turned ON by the paper. • The lower tray exit sensor (PS1) is not turned OFF even after the set period of time has elapsed after the copier's paper exit sensor (PS3) is turned OFF by the paper. • The upper tray exit sensor (PS2) is not turned OFF even after the set period of time has elapsed after the copier's paper exit sensor (PS3) is turned OFF by the paper. • The paper exit sensor (PS25) is not turned OFF even after the set period of time has elapsed after the copier's paper exit sensor (PS3) is turned ON by the paper. • The lower tray exit sensor (PS1) is turned ON when the power switch is set to ON, a door or cover is opened and closed, or a misfeed or malfunction is reset. • The upper tray exit sensor (PS2) is turned ON when the power switch is set to ON, a door or cover is opened and closed, or a misfeed or malfunction is reset.	Misfeed clearing cover	P.594
72-17	FS transport section	<When FS-527 is installed> • The paper passage sensor/2 (PS2) is not turned ON even after the set period of time has elapsed after the paper passage sensor/1 (PS1) is turned ON by the paper. • The paper passage sensor/2 (PS2) is not turn OFF even after the set period of time has elapsed after it turns ON. <When FS-529 is installed> • The paper passage sensor/2 (PS10) is not turned ON even after the set period of time has elapsed after the paper passage sensor/1 (PS1) is turned ON by the paper. • The paper passage sensor/2 (PS10) is not turned OFF even after the set period of time has elapsed after the paper passage sensor/2 (PS10) is turned ON by the paper.	Horizontal conveyance cover Front door	P.595

JAM code	JAM type	Detection timing	Misfeed processing location	Ref. page
72-18	FS transport section	<When FS-527 is installed> • The registration sensor (PS10) is not turned ON even after the set period of time has elapsed after the paper passage sensor/2 (PS2) is turned ON by the paper. • The registration sensor (PS10) is not turn OFF even after the set period of time has elapsed after it turns ON.	Horizontal convey-ance cover	P.596
72-19		<When FS-527 is installed> • The lower path sensor (PS9) is not turned ON even after the set period of time has elapsed after the registration sensor (PS10) is turned ON by the paper. • The lower path sensor (PS9) is not turn OFF even after the set period of time has elapsed after it turns ON. • The upper path sensor (PS8) is not turned ON even after the set period of time has elapsed after the registration sensor (PS10) is turned ON by the paper. • The upper path sensor (PS8) is not turn OFF even after the set period of time has elapsed after it turns ON. • The lower path sensor (PS9) is not turned ON by the paper even after the set period of time has elapsed after the switchback operation caused by the conveyance motor (M4) is completed. • After the switchback operation caused by the conveyance motor (M4) is completed, the lower path sensor (PS9) is not turned OFF even after the set period of time has elapsed after PS9 is turn ON by the paper.	Front door	P.596
72-21		<When FS-527 is installed> • The tray 2 paper detection sensor (PS16) is not turned ON even after the set period of time has elapsed after the lower path sensor (PS9) is turned ON by the paper. <When FS-529 is installed> • The paper empty sensor (PS7) is not turned ON even after the set period of time has elapsed after the paper passage sensor/2 (PS10) is turned ON by the paper. • The paper empty sensor (PS7) is not turned OFF even after the set period of time has elapsed after the paper empty sensor (PS7) is turned ON by the paper.	Front door	P.596

JAM code	JAM type	Detection timing	Misfeed processing location	Ref. page
72-22	FS transport section	<When FS-527 is installed> • The tray 1 path sensor (PS6) is not turned ON even after the set period of time has elapsed after the registration sensor (PS10) is turned ON by the paper. • The tray 1 path sensor (PS6) is not turn OFF even after the set period of time has elapsed after it turns ON.	Front door	P.597
72-26	SD paper exit section	<When FS-527+SD-509 is installed> • The paper detection sensor/2 (PS44) is not turn OFF even after the set period of time has elapsed after it turns ON.	Front door, stacker unit	P.597
72-43	PK JAM	<When FS-527+PK-517 is installed> • Though the punch home sensor/1 (PS100) is not turned ON after the punch motor/1 (M100) starts rotating forward, PS100 is turned ON after M100 starts rotating backward.	Front door	P.598
72-81	FS staple section	• Though the stapler sensor is not turned ON after the stapler motor starts rotating forward, the stapler sensor is turned ON after the stapler motor starts rotating backward.	Front door, Front cover	P.598
72-85	SD staple section	<When FS-527+SD-509 is installed> • Though the saddle stapler home sensor is not turned ON after the saddle stapler motor starts rotating forward, the saddle stapler home sensor is turned ON after the saddle stapler motor starts rotating backward.	Front door, stacker unit	P.598
72-86	SD transport section	<When FS-527+SD-509 is installed> • The paper detection sensor/1 (PS43) is not turned ON even after the set period of time has elapsed after the saddle path sensor (PS11) is turned ON by the paper.		P.599
72-87		<When FS-527+SD-509 is installed> • The paper detection sensor/2 (PS44) is not turned ON even after the set period of time has elapsed after the saddle path sensor (PS11) is turned ON by the paper.		P.599

JAM code	JAM type	Detection timing	Misfeed processing location	Ref. page
92-01	Duplex pre-registration section	• The registration sensor (PS1) is not unblocked even after the lapse of a given period of time after a duplex paper feed sequence has been started.	Right door	P.600
92-40		• For the second-side feed of paper in the duplex mode, the image write start signal permit continues to be disabled for a pre-determined period of time after the timing of the image write start signal output.		
—		• In case paper position is detected as locating properly after main power switch is turned ON, door and cover are opened / closed or jam/trouble reset is done, it is regarded as paper jam at duplex pre-registration section.		
93-01	Duplex transport section	• The paper does not unblock the duplex unit upper transport sensor (PS92) even after lapse of a given period of time after the paper has blocked the PS92.	Duplex door	P.600
—		• The paper does not unblock the duplex unit lower transport sensor (PS93) even after lapse of a given period of time after the paper has blocked the duplex unit upper transport sensor (PS92).		
—		• The paper does not unblock the duplex unit lower transport sensor (PS93) even after lapse of a given period of time after the paper has blocked the PS93.		
—		• In case the duplex unit upper transport sensor (PS92) or the duplex unit lower transport sensor (PS93) is blocked after main power switch is turned ON, door and cover are opened /closed or jam/trouble reset is done, it is regarded as paper jam at duplex transport section.		
—		• In case paper position is detected as locating properly after main power switch is turned ON, door and cover are opened / closed or jam/trouble reset is done, it is regarded as paper jam at duplex transport section.		
99-01	Controller JAM	• Forced stop command was sent from the controller to the printer engine due to the error in paper size, media, etc. • Media error has occurred in both sides printing.	—	—

17.1.1 Misfeed display resetting procedure

- Open the corresponding door, clear the sheet of paper misfed, and close the door.

17.2 Sensor layout

17.2.1 Main body

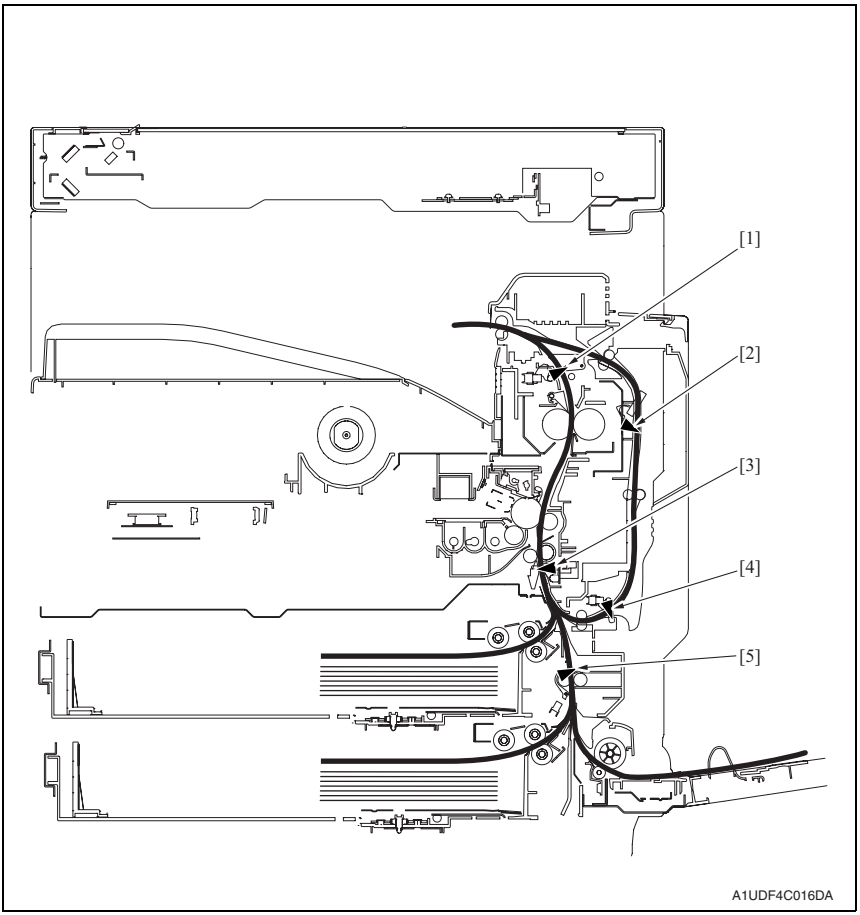

[1] Paper exit sensor (PS3)

[2] Duplex unit upper transport sensor (PS92)

[3] Registration sensor (PS1)

[4] Duplex unit lower transport sensor (PS93)

[5] Tray 2 vertical transport sensor (PS28)

17.2.2 DF-621

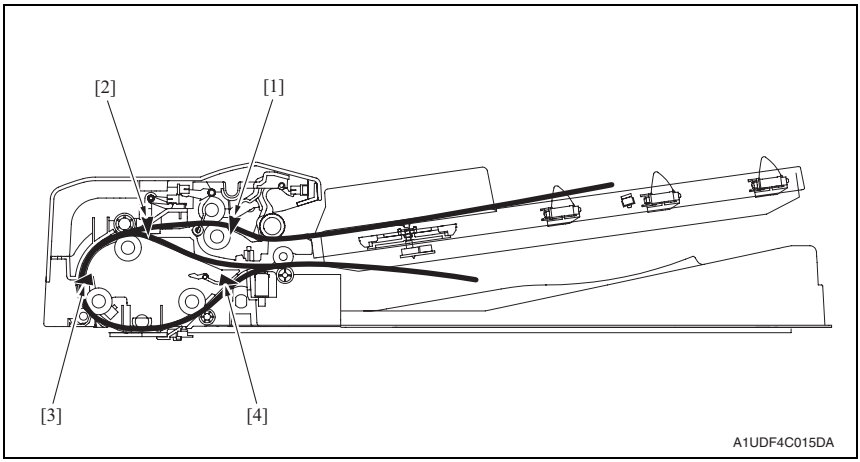

[1] Separation roller sensor (PS2)
[2] Document registration sensor (PS3)
[3] Reading roller sensor (PS4)
[4] Document exit sensor (PS5)

17.2.3 PC-109/PC-208

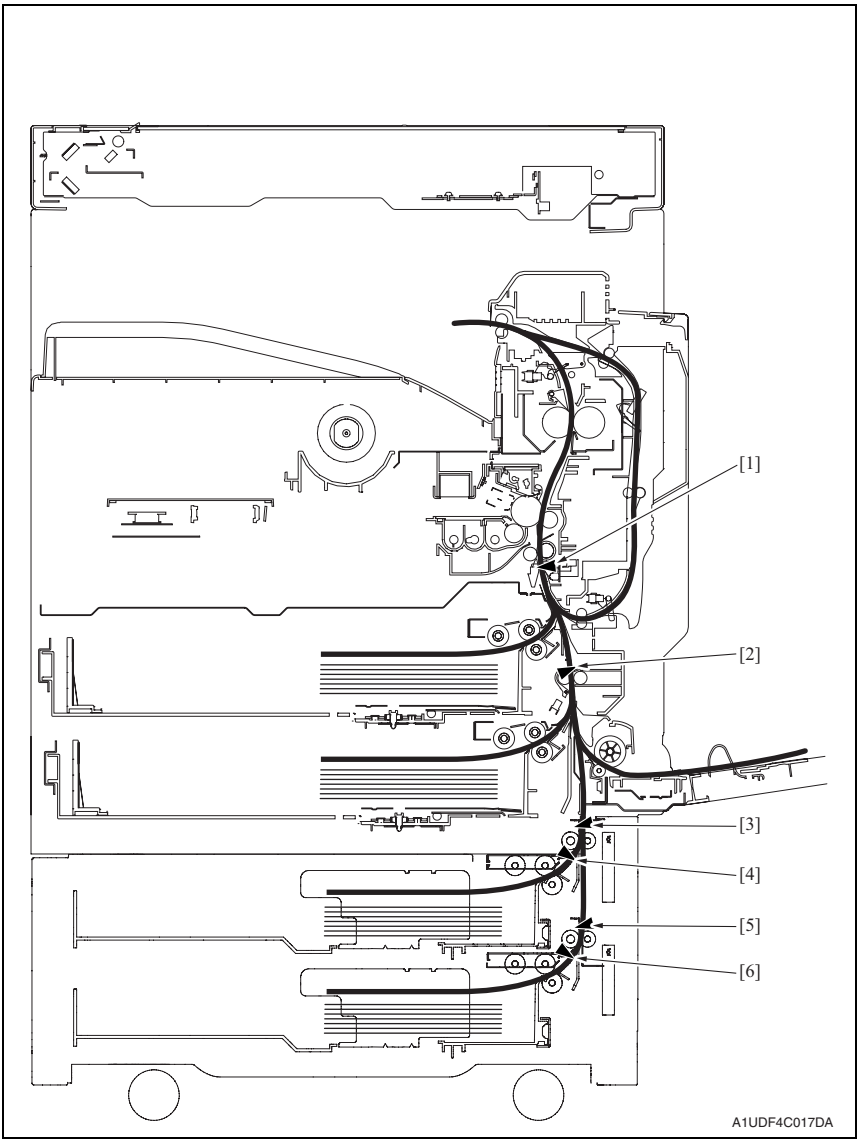

[1] Registration sensor (PS1)
[2] Tray 2 vertical transport sensor (PS28)
[3] Tray 3 vertical transport sensor (PS36)
[4] Tray 3 paper feed sensor (PS35)
[5] Tray 4 vertical transport sensor (PS46)
[6] Tray 4 paper feed sensor (PS45)

17.2.4 PC-409

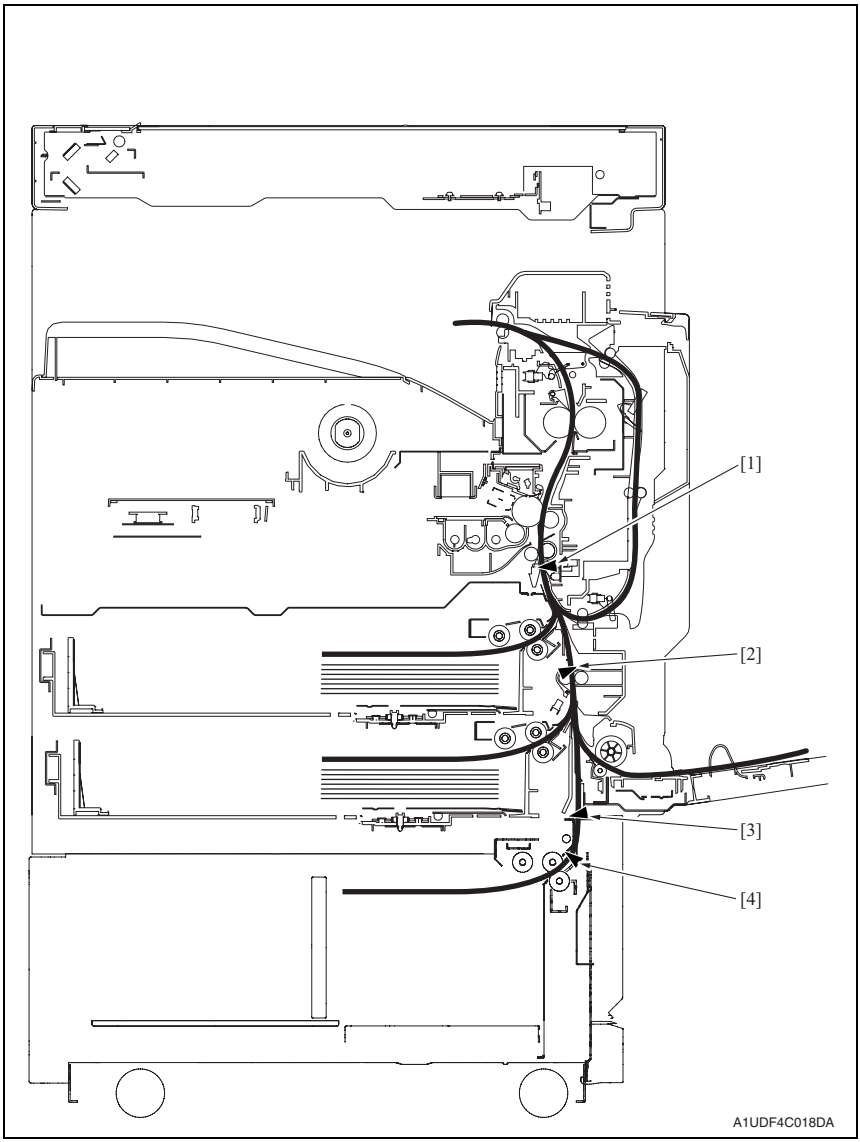

[1] Registration sensor (PS1)

[2] Tray 2 vertical transport sensor (PS28)

[3] Vertical transport sensor (PS52)

[4] Paper feed sensor (PS51)

17.2.5 JS-505

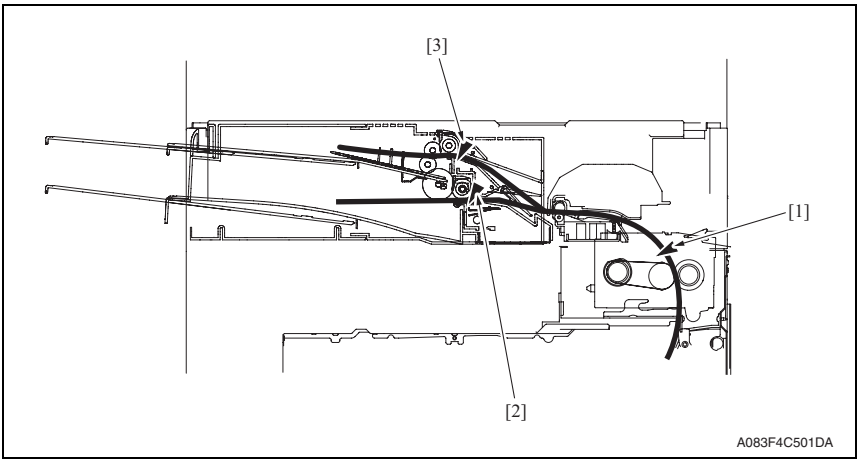

[1] Paper exit sensor (PS3)
[2] Lower tray exit sensor (PS1)
[3] Upper tray exit sensor (PS2)

17.2.6 FS-529

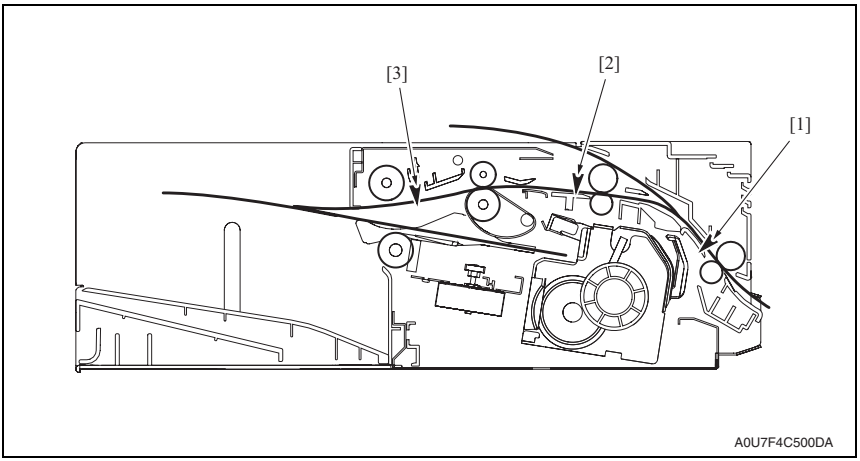

[1] Paper passage sensor/1 (PS1)
[2] Paper passage sensor/2 (PS10)
[3] Paper empty sensor (PS7)

17.2.7 FS-527/SD-509/PK-517/JS-603

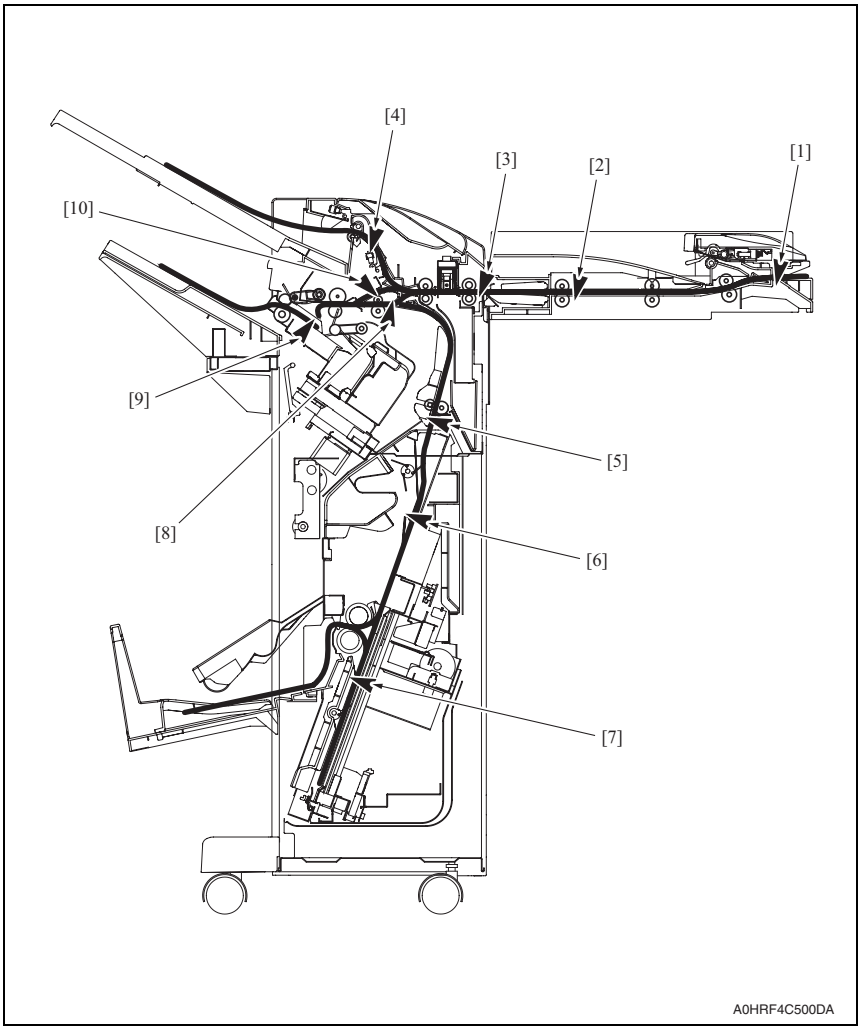

[1]	Paper passage sensor/1 (PS1)	[6]	Paper detection sensor/1 (PS43)
[2]	Paper passage sensor/2 (PS2)	[7]	Paper detection sensor/2 (PS44)
[3]	Registration sensor (PS10)	[8]	Lower path sensor (PS9)
[4]	Tray 1 path sensor (PS6)	[9]	Tray 2 paper detection sensor (PS16)
[5]	Saddle path sensor (PS11)	[10]	Upper path sensor (PS8)

17.3 Solution

17.3.1 Initial check items

- When a paper misfeed occurs, first perform the following initial check items.

Check item	Action
Does paper meet product specifications?	Replace paper.
Is the paper curled, wavy, or damp?	Replace paper.
Is a foreign object present along the paper path, or is the paper path deformed or worn?	Clean the paper path and replace if necessary.
Are rolls/rollers dirty, deformed, or worn?	Clean or replace the defective roll/roller.
Are the edge guide and trailing edge stop at the correct position to accommodate the paper?	Set as necessary.
Are the actuators operating correctly?	Correct or replace the defective actuator.

17.3.2 Misfeed at manual bypass feed section

Relevant parts	
Transport motor (M1) Manual paper feed clutch (CL81) Manual pick-up solenoid (SD81)	Printer control board (PRCB) Tray 2 vertical transport sensor (PS28)

Step	Action	WIRING DIAGRAM	
		Control signal	Location (Electrical component)
1	Initial check items	—	—
2	PS28 I/O check, sensor check	PRCB CN23-16 (ON)	C-17 C-19
3	CL81 operation check	PRCB CN9-2 (ON)	C-10
4	SD81 operation check	PRCB CN9-4 (ON)	C-10
5	M1 operation check	PRCB CN3-4 (REM) PRCB CN3-7 (LOCK)	C-16
6	Change PRCB	—	—

17.3.3 Misfeed at tray 1 feed section

Relevant parts	
Transport motor (M1) Tray 1 paper feed clutch (CL11)	Printer control board (PRCB) Registration sensor (PS1)

Step	Action	WIRING DIAGRAM	
		Control signal	Location (Electrical component)
1	Initial check items	—	—
2	PS1 I/O check, sensor check	PRCB CN23-9 (ON)	C-17 to 18 C-20
3	CL11 operation check	PRCB CN13-2 (ON)	C-1 C-3
4	M1 operation check	PRCB CN3-4 (REM) PRCB CN3-7 (LOCK)	C-16
5	Change PRCB	—	—

17.3.4 Misfeed at tray 2 feed section

Relevant parts	
Transport motor (M1) Tray 2 paper feed clutch (CL21) Tray 2 vertical transport clutch (CL22)	Printer control board (PRCB) Tray 2 vertical transport sensor (PS28)

Step	Action	WIRING DIAGRAM	
		Control signal	Location (Electrical component)
1	Initial check items	—	—
2	PS28 I/O check, sensor check	PRCB CN23-16 (ON)	C-17 C-19
3	CL21 operation check	PRCB CN14-2 (ON)	C-4 C-6
4	CL22 operation check	PRCB CN23-13 (ON)	C-17 C-19
5	M1 operation check	PRCB CN3-4 (REM) PRCB CN3-7 (LOCK)	C-16
6	Change PRCB	—	—

17.3.5 Tray 3 feed section/vertical transport section misfeed

Relevant parts	
Tray 3 vertical transport sensor (PS36) Tray 2 vertical transport sensor (PS28) Tray 3 paper feed motor (M31)	PC Control board (PCCB31) Printer control board (PRCB) Tray 3 vertical transport motor (M32) Registration sensor (PS1)

Step	Action	WIRING DIAGRAM	
		Control signal	Location (Electrical component)
1	Initial check items	—	—
2	PS1 I/O check, sensor check	PRCB CN23-9 (ON)	C-17 to 18 C-20
3	PS36 I/O check, sensor check	PCCB31 CN6-11 (ON)	PC-208 B-2
4	PS28 I/O check, sensor check	PRCB CN23-16 (ON)	C-17 C-19
5	M31 operation check	PCCB31 CN5-1 to 4	PC-208 B-3
6	M32 operation check	PCCB31 CN5-5 to 8	PC-208 B-3
7	PCCB ICP1, ICP3 conduction check	—	—
8	Change PCCB31	—	—
9	Change PRCB	—	—

17.3.6 Tray 4 feed section/vertical transport section misfeed

Relevant parts	
Tray 4 vertical transport sensor (PS46) Tray 3 vertical transport sensor (PS36) Tray 2 vertical transport sensor (PS28) Registration sensor (PS1)	PC Control board (PCCB31) Printer control board (PRCB) Tray 4 paper feed motor (M41) Tray 4 vertical transport motor (M42)

Step	Action	WIRING DIAGRAM	
		Control signal	Location (Electrical component)
1	Initial check items	—	—
2	PS1 I/O check, sensor check	PRCB CN23-9 (ON)	C-17 to 18 C-20
3	PS46 I/O check, sensor check	PCCB31 CN11-2 (ON)	PC-208 G-5
4	PS36 I/O check, sensor check	PCCB31 CN6-11 (ON)	PC-208 B-2
5	PS28 I/O check, sensor check	PRCB CN23-16 (ON)	C-17 C-19
6	M41 operation check	PCCB31 CN9-1 to 4	PC-208 G-5 to 6
7	M42 operation check	PCCB31 CN9-6 to 9	PC-208 G-6
8	PCCB ICP1, ICP2 conduction check	—	—
9	Change PCCB31	—	—
10	Change PRCB	—	—

17.3.7 LCT paper feed section/vertical transport section misfeed

Relevant parts	
Paper feed sensor (PS51) Vertical transport sensor (PS52) Tray 2 vertical transport sensor (PS28) Registration sensor (PS1)	PC Control board (PCCB51) Printer control board (PRCB) Paper feed motor (M51) Vertical transport motor (M52)

Step	Action	WIRING DIAGRAM	
		Control signal	Location (Electrical component)
1	Initial check items	—	—
2	PS51 I/O check, sensor check	PCCB51 PJ5-2 (ON)	PC-409 G-9
3	PS52 I/O check, sensor check	PCCB51 PJ5-5 (ON)	PC-409 G-9
4	PS28 I/O check, sensor check	PRCB CN23-16 (ON)	C-17 C-19
5	PS1 I/O check, sensor check	PRCB CN23-9 (ON)	C-17 to 18 C-20
6	M51 operation check	PCCB51 PJ6-1 to 4	PC-409 G-10
7	M52 operation check	PCCB51 PJ6-5 to 8	PC-409 G-9
8	PCCB ICP1, ICP2 conduction check	—	—
9	Change PCCB51	—	—
10	Change PRCB	—	—

17.3.8 Misfeed at vertical transport section

Relevant parts	
Transport motor (M1) Tray 2 vertical transport clutch (CL22) Registration clutch (CL1)	Printer control board (PRCB) Registration sensor (PS1) Tray 2 vertical transport sensor (PS28)

Step	Action	WIRING DIAGRAM	
		Control signal	Location (Electrical component)
1	Initial check items	—	—
2	PS1 I/O check, sensor check	PRCB CN23-9 (ON)	C-17 to 18 C-20
3	PS28 I/O check, sensor check	PRCB CN23-16 (ON)	C-17 C-19
4	CL22 operation check	PRCB CN23-13 (ON)	C-17 C-19
5	CL1 operation check	FREYB CN23-11 (ON)	C-17 to 18 C-20
6	M1 operation check	PRCB CN3-4 (REM) PRCB CN3-7 (LOCK)	C-16
7	Change PRCB	—	—

17.3.9 Misfeed at image transfer section

Relevant parts	
Transport motor (M1) Registration clutch (CL1) Paper exit sensor (PS3)	Printer control board (PRCB) Registration sensor (PS1)

Step	Action	WIRING DIAGRAM	
		Control signal	Location (Electrical component)
1	Initial check items	—	—
2	PS1 I/O check, sensor check	PRCB CN23-9 (ON)	C-17 to 18 C-20
3	PS3 I/O check, sensor check	—	—
4	CL1 operation check	FREYB CN23-11 (ON)	C-17 to 18 C-20
5	M1 operation check	PRCB CN3-4 (REM) PRCB CN3-7 (LOCK)	C-16
6	Change PRCB	—	—

17.3.10 Misfeed at exit section

Relevant parts	
Transport motor (M1) Switchback motor (M91)	Printer control board (PRCB) Paper exit sensor (PS3)

Step	Action	WIRING DIAGRAM	
		Control signal	Location (Electrical component)
1	Initial check items	—	—
2	PS3 I/O check, sensor check	—	—
3	M1 operation check	PRCB CN3-4 (REM) PRCB CN3-7 (LOCK)	C-16
4	M91 operation check	PRCB CN18-4 to 7	C-13
5	Change PRCB	—	—

17.3.11 ADF turnover section

Relevant parts	
Document reading motor (M1) Document registration sensor (PS3) Reading roller sensor (PS4)	Document exit roller release solenoid (SD1) DF control board (DFCB)

Step	Action	WIRING DIAGRAM	
		Control signal	Location (Electrical component)
1	Initial check items	—	—
2	PS3 I/O check, sensor check	DFCB J10-12 (ON)	DF-621 G-5
3	PS4 I/O check, sensor check	DFCB J11-3 (ON)	DF-621 G-3
4	M1 operation check	DFCB J6-1 to 4	DF-621 B-2
5	SD1 operation check	DFCB J14-1 (ON)	DF-621 B-4
6	DFCB F6 conduction check	—	—
7	Change DFCB	—	—

17.3.12 ADF paper feed section

Relevant parts	
Document feed motor (M2) Separation roller sensor (PS2) Document FD size sensor/1 (PS6) Document FD size sensor/2 (PS7) Document FD size sensor/3 (PS8)	Document feed clutch (CL1) Document registration clutch (CL2) DF control board (DFCB)

Step	Action	WIRING DIAGRAM	
		Control signal	Location (Electrical component)
1	Initial check items	—	—
2	PS2 I/O check, sensor check	DFCB J10-8 (ON)	DF-621 G-5
3	PS6 I/O check, sensor check	DFCB J7-6 (ON)	DF-621 G-4
4	PS7 I/O check, sensor check	DFCB J7-5 (ON)	DF-621 G-3
5	PS8 I/O check, sensor check	DFCB J7-7 (ON)	DF-621 G-4
6	CL1 operation check	DFCB J17-1 (ON)	DF-621 B-4
7	CL2 operation check	DFCB J16-1 (ON)	DF-621 B-4
8	M2 operation check	DFCB J3-1 to 4	DF-621 B-2
9	DFCB F2 conduction check	—	—
10	DFCB F9 conduction check	—	—
11	Change DFCB	—	—

17.3.13 ADF transport section

Relevant parts	
Document registration sensor (PS3) Separation roller sensor (PS2) Reading roller sensor (PS4)	DF control board (DFCB) Document reading motor (M1) Document feed motor (M2)

Step	Action	WIRING DIAGRAM	
		Control signal	Location (Electrical component)
1	Initial check items	—	—
2	PS2 I/O check, sensor check	DFCB J10-8 (ON)	DF-621 G-5
3	PS3 I/O check, sensor check	DFCB J10-12 (ON)	DF-621 G-5
4	PS4 I/O check, sensor check	DFCB J11-3 (ON)	DF-621 G-3
5	M1 operation check	DFCB J6-1 to 4	DF-621 B-2
6	M2 operation check	DFCB J3-1 to 4	DF-621 B-2
7	Change DFCB	—	—

17.3.14 ADF paper exit section

Relevant parts	
Reading roller sensor (PS4) Document exit sensor (PS5)	DF control board (DFCB) Document reading motor (M1)

Step	Action	WIRING DIAGRAM	
		Control signal	Location (Electrical component)
1	Initial check items	—	—
2	PS4 I/O check, sensor check	DFCB J11-3 (ON)	DF-621 G-3
3	PS5 I/O check, sensor check	DFCB J11-4 (ON)	DF-621 G-3
4	M1 operation check	DFCB J6-1 to 4	DF-621 B-2
5	Change DFCB	—	—

17.3.15 ADF image reading section

Relevant parts	
Document registration sensor (PS3) Reading roller sensor (PS4)	DF control board (DFCB) Document reading motor (M1) Reading roller release motor (M3)

Step	Action	WIRING DIAGRAM	
		Control signal	Location (Electrical component)
1	Initial check items	—	—
2	Make the adjustment of original stop position. See P.481	—	—
3	PS3 I/O check, sensor check	DFCB J10-12 (ON)	DF-621 G-5
4	PS4 I/O check, sensor check	DFCB J11-3 (ON)	DF-621 G-3
5	M1 operation check	DFCB J6-1 to 4	DF-621 B-2
6	M3 operation check	DFCB J15-4 to 5	DF-621 G-2
7	DFCB F4, F5 conduction check	—	—
8	Change DFCB	—	—

17.3.16 Code: 72-14

Relevant parts	
Lower path sensor (PS9) Saddle path sensor (PS11) Conveyance motor (M4)	FS control board (FSCB)

Step	Action	WIRING DIAGRAM	
		Control signal	Location (Electrical component)
1	Initial check items	—	—
2	PS9 I/O check, sensor check	FSCB PJ16-5 (ON)	FS-527 J-4
3	PS11 I/O check, sensor check	FSCB PJ13-6 (ON)	FS-527 B to C-5
4	M4 operation check	FSCB PJ10-5 to 8	FS-527 B to C-3
5	FSCB F7 conduction check	—	—
6	Change FSCB	—	—

17.3.17 Code: 72-15

Relevant parts	
Saddle path sensor (PS11)	FS control board (FSCB)

Step	Action	WIRING DIAGRAM	
		Control signal	Location (Electrical component)
1	Initial check items	—	—
2	PS11 I/O check, sensor check	FSCB PJ13-6 (ON)	FS-527 B to C-5
3	Change FSCB	—	—

17.3.18 Code: 72-16

(1) When FS-527 is installed

Relevant parts	
Paper exit sensor (PS3) Paper passage sensor/1 (PS1) Paper passage motor/1 (M1) Paper passage motor/2 (M3)	FS control board (FSCB)

Step	Action	WIRING DIAGRAM	
		Control signal	Location (Electrical component)
1	Initial check items	—	—
2	PS3 I/O check, sensor check	—	—
3	PS1 I/O check, sensor check	FSCB PJ11-2 (ON)	FS-527 I-11 to 12
4	M1 operation check	FSCB PJ28-1 to 4	FS-527 I-12
5	M3 operation check	FSCB PJ7-1 to 4	FS-527 C to B-3
6	FSCB F5, F6 conduction check	—	—
7	Change FSCB	—	—

(2) When FS-529 is installed

Relevant parts	
Paper exit sensor (PS3) Paper passage sensor/1 (PS1)	FS control board (FSCB)

Step	Action	WIRING DIAGRAM	
		Control signal	Location (Electrical component)
1	Initial check items	—	—
2	PS3 I/O check, sensor check	—	—
3	PS1 I/O check, sensor check	FSCB CN3-3 (ON)	FS-529 B-3
4	Change FSCB	—	—

(3) When JS-505 is installed

Relevant parts	
Paper exit sensor (PS3) Lower tray exit sensor (PS1) Upper tray exit sensor (PS2) Transport motor (M1)	JS control board (JSCB) Printer control board (PRCB)

Step	Action	WIRING DIAGRAM	
		Control signal	Location (Electrical component)
1	Initial check items	—	—
2	PS3 I/O check, sensor check	—	—
3	PS1 I/O check, sensor check	JSCB PJ7-6 (ON)	JS-505 F-4 to 5
4	PS2 I/O check, sensor check	JSCB P7-9 (ON)	JS-505 F-4
5	M1 operation check	JSCB PJ5-1 to 4	JS-505 B-2 to 3
6	JSCB F7 conduction check	—	—
7	Change JSCB	—	—
8	Change PRCB	—	—

17.3.19 Code: 72-17

(1) When FS-527 is installed

Relevant parts	
Paper passage sensor/1 (PS1) Paper passage sensor/2 (PS2)	FS control board (FSCB)

Step	Action	WIRING DIAGRAM	
		Control signal	Location (Electrical component)
1	Initial check items	—	—
2	PS1 I/O check, sensor check	FSCB PJ11-2 (ON)	FS-527 I-11 to 12
3	PS2 I/O check, sensor check	FSCB PJ11-8 (ON)	FS-527 I-11
4	Change FSCB	—	—

(2) When FS-529 is installed

Relevant parts	
Paper passage sensor/1 (PS1) Paper passage sensor/2 (PS10)	FS control board (FSCB)

Step	Action	WIRING DIAGRAM	
		Control signal	Location (Electrical component)
1	Initial check items	—	—
2	PS1 I/O check, sensor check	FSCB PJ11-2 (ON)	FS-527 I-11 to 12
3	PS10 I/O check, sensor check	FSCB CN7-3 (ON)	FS-529 B-4 to 5
4	Change FSCB	—	—

17.3.20 Code: 72-18

Relevant parts	
Paper passage sensor/2 (PS2) Registration sensor (PS10)	FS control board (FSCB)

Step	Action	WIRING DIAGRAM	
		Control signal	Location (Electrical component)
1	Initial check items	—	—
2	PS2 I/O check, sensor check	FSCB PJ11-8 (ON)	FS-527 I-11
3	PS10 I/O check, sensor check	FSCB PJ13-8 (ON)	FS-527 B to C-5
4	Change FSCB	—	—

17.3.21 Code: 72-19

Relevant parts	
Conveyance motor (M4) Upper path sensor (PS8) Lower path sensor (PS9) Registration sensor (PS10)	Printer control board (PRCB)

Step	Action	WIRING DIAGRAM	
		Control signal	Location (Electrical component)
1	Initial check items	—	—
2	PS8 I/O check, sensor check	FSCB PJ14-12 (ON)	FS-527 J-5
3	PS9 I/O check, sensor check	FSCB PJ16-5 (ON)	FS-527 J-4
4	PS10 I/O check, sensor check	FSCB PJ13-8 (ON)	FS-527 B to C-5
5	M4 operation check	FSCB PJ10-5 to 8	FS-527 B to C-3
6	FSCB F7 conduction check	—	—
7	Change FSCB	—	—

17.3.22 Code: 72-21

(1) When FS-527 is installed

Relevant parts	
Lower path sensor (PS9) Tray 2 paper detection sensor (PS16)	FS control board (FSCB)

Step	Action	WIRING DIAGRAM	
		Control signal	Location (Electrical component)
1	Initial check items	—	—
2	PS9 I/O check, sensor check	FSCB PJ16-5 (ON)	FS-527 J-4
3	PS16 I/O check, sensor check	FSCB PJ17-8 (ON)	FS-527 B to C-8
4	Change FSCB	—	—

(2) When FS-529 is installed

Relevant parts	
Paper passage sensor/2 (PS10) Paper empty sensor (PS7)	FS control board (FSCB)

Step	Action	WIRING DIAGRAM	
		Control signal	Location (Electrical component)
1	Initial check items	—	—
2	PS10 I/O check, sensor check	FSCB CN7-3 (ON)	FS-529 B-4 to 5
3	PS7 I/O check, sensor check	FSCB CN6-3 (ON)	FS-529 B-1 to 2
4	Change FSCB	—	—

17.3.23 Code: 72-22

Relevant parts	
Registration sensor (PS10) Tray 1 path sensor (PS6)	FS control board (FSCB)

Step	Action	WIRING DIAGRAM	
		Control signal	Location (Electrical component)
1	Initial check items	—	—
2	PS10 I/O check, sensor check	FSCB PJ13-8 (ON)	FS-527 B to C-5
3	PS6 I/O check, sensor check	FSCB PJ14-9 (ON)	FS-527 J-5
4	Change FSCB	—	—

17.3.24 Code: 72-26

Relevant parts	
Paper detection sensor/2 (PS44)	SD drive board (SDDB) FS control board (FSCB)

Step	Action	WIRING DIAGRAM	
		Control signal	Location (Electrical component)
1	Initial check items	—	—
2	PS44 I/O check, sensor check	SDDB PJ13-2 (ON)	SD-509 G-3
3	Change SDDB	—	—
4	Change FSCB	—	—

17.3.25 Code: 72-43

Relevant parts	
Punch motor/1 (M100) Punch home sensor/1 (PS100)	FS control board (FSCB)

Step	Action	WIRING DIAGRAM	
		Control signal	Location (Electrical component)
1	Initial check items	—	—
2	PS100 I/O check, sensor check	FSCB PJ19-8 (ON)	FS-527 (PK-517) J-9
3	M100 operation check	FSCB PJ19-1 (CW) FSCB PJ19-3 (CCW)	FS-527 (PK-517) J-8
4	Change FSCB	—	—

17.3.26 Code: 72-81

Relevant parts	
Stapler unit	FS control board (FSCB)

Step	Action	WIRING DIAGRAM	
		Control signal	Location (Electrical component)
1	Initial check items	—	—
2	Change stapler unit	—	—
3	Change FSCB	—	—

17.3.27 Code: 72-85

Relevant parts	
Saddle stapler unit	SD drive board (SDDB) FS control board (FSCB)

Step	Action	WIRING DIAGRAM	
		Control signal	Location (Electrical component)
1	Initial check items	—	—
2	Change saddle stapler unit	—	—
3	Change SDDB	—	—
4	Change FSCB	—	—

17.3.28 Code: 72-86

Relevant parts	
Saddle path sensor (PS11) Paper detection sensor/1 (PS43)	SD drive board (SDDB) FS control board (FSCB)

Step	Action	WIRING DIAGRAM	
		Control signal	Location (Electrical component)
1	Initial check items	—	—
2	PS11 I/O check, sensor check	FSCB PJ13-6 (ON)	FS-527 B to C-5
3	PS43 I/O check, sensor check	SDDB PJ9-8 (ON)	SD-509 G-1
4	SDDB F1 conduction check	—	—
5	Change SDDB	—	—
6	Change FSCB	—	—

17.3.29 Code: 72-87

Relevant parts	
Saddle path sensor (PS11) Paper detection sensor/2 (PS44)	SD drive board (SDDB) FS control board (FSCB)

Step	Action	WIRING DIAGRAM	
		Control signal	Location (Electrical component)
1	Initial check items	—	—
2	PS11 I/O check, sensor check	FSCB PJ13-6 (ON)	FS-527 B to C-5
3	PS44 I/O check, sensor check	SDDB PJ13-2 (ON)	SD-509 G-3
4	SDDB F1 conduction check	—	—
5	Change SDDB	—	—
6	Change FSCB	—	—

17.3.30 Misfeed at duplex pre-registration section

Relevant parts	
Transport motor (M1) Switchback motor (M91) Duplex transport motor (M92)	Printer control board (PRCB) Registration sensor (PS1)

Step	Action	WIRING DIAGRAM	
		Control signal	Location (Electrical component)
1	Initial check items	—	—
2	PS1 I/O check, sensor check	PRCB CN23-9 (ON)	C-17 to 18 C-20
3	M1 operation check	PRCB CN3-4 (REM) PRCB CN3-7 (LOCK)	C-16
4	M91 operation check	PRCB CN18-4 to 7	C-13
5	M92 operation check	PRCB CN5-4 to 7	C-22
6	Change PRCB	—	—

17.3.31 Misfeed at duplex transport section

Relevant parts	
Switchback motor (M91) Duplex transport motor (M92)	Printer control board (PRCB) Duplex unit upper transport sensor (PS92) Duplex unit lower transport sensor (PS93)

Step	Action	WIRING DIAGRAM	
		Control signal	Location (Electrical component)
1	Initial check items	—	—
2	PS92 I/O check, sensor check	PRCB CN5-10 (ON)	C-22
3	PS93 I/O check, sensor check	PRCB CN5-13 (ON)	C-21
4	M91 operation check	PRCB CN18-4 to 7	C-13
5	M92 operation check	PRCB CN5-4 to 7	C-22
6	Change PRCB	—	—

18. MALFUNCTION CODE

18.1 Display procedure

- The machine's CPU performs a self-diagnostics function that, on detecting a malfunction, gives the corresponding warning code and maintenance call mark on the control panel.
- Touching the maintenance call mark will display the corresponding warning code on the state confirm screen.

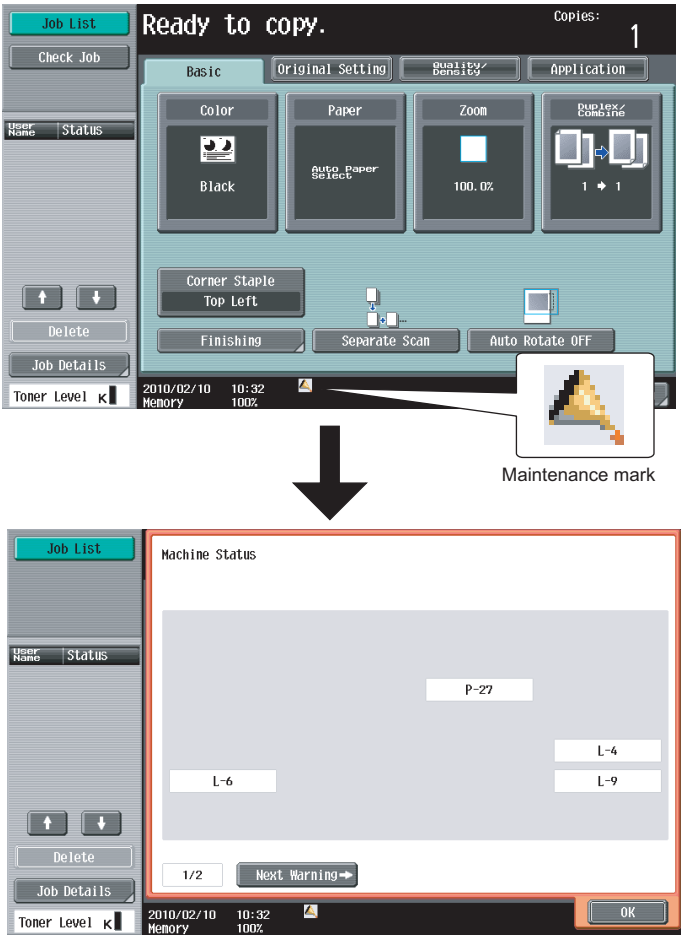

A1UDF4E020DA

18.2 List

- If an image stabilization or scanner fault occurs, the corresponding warning code appears.

Code	Item	Description
S-1	CCD gain adjustment failure	• It is detected that the CCD clamp gain adjustment value is faulty.
D-1	Split line detect	• When the main/sub power switches are turned ON or when the machine is recovering from the power save mode, if the original cover is not open, the cleaning brush rotates 360 degrees to detect whether or not stain exists in the original reading section. This warning will be displayed if the original is set to ADF when stain exist. • The thin line detection level and the warning display can be changed by the following setting. [Service Mode] → [System 2] → [Split Line Detect. Setting]
P-27	Transfer ATVC failure	• An abnormal average value is detected during an adjustment of the image transfer ATVC value.
L-4	Drum unit rotation time excess warning	• PC drum rotation time count value used for the life judgment of drum unit (the value for PC drum rotation distance calculated into the rotation time) is above the threshold value for the excess warning. • Printing with this warning being displayed is not included in the image warranty.
L-6	Warning of excess hours of developer use	• The count of hours the developer has been used (PC motor rotation time), which is used to judge the life of the developer, exceeds the excess warning threshold. • Printing with this warning being displayed is not included in the image warranty.
L-7	Warning of ozone filter's excess number of prints	• The ozone filter's count of sheets printed, which is used to judge the life of the ozone filter, exceeds the excess warning threshold. • Printing with this warning being displayed is not included in the image warranty.
L-8	Paper dust remover excess warning	• The paper dust remover's count (PC motor rotation time), which is used to judge the life of the paper dust remover, exceeds the excess warning threshold. • Printing with this warning being displayed is not included in the image warranty.
L-9	Developing unit rotation time excess warning	• The count of hours the developing unit has been rotated (PC motor rotation time), which is used to judge the life of the developing unit, exceeds the excess warning threshold. • Printing with this warning being displayed is not included in the image warranty.
L-10	Warning of transfer roller unit's excess number of prints	• The transfer roller unit's count of sheets printed, which is used to judge the life of the transfer roller unit, exceeds the excess warning threshold. • Printing with this warning being displayed is not included in the image warranty.
L-11	Fusing unit rotation time excess warning	• The count of hours the fusing unit has been rotated (main motor rotation time), which is used to judge the life of the fusing unit, exceeds the excess warning threshold. • Printing with this warning being displayed is not included in the image warranty.

18.3 Solution

18.3.1 S-1: CCD gain adjustment failure

Relevant parts	
Exposure unit	CCD board (CCDB) MFP board (MFPB)

Step	Action
1	Correct the harness connection between CCDB and MFPB if faulty.
2	Check for possible extraneous light and correct as necessary.
3	Clean the lens, mirrors, CCD surface, and shading sheet if dirty.
4	Correct reflective mirror of the scanner if faulty, or change scanner.
5	Change CCD sensor unit.
6	Change MFPB.

18.3.2 D-1: Split line detect

Relevant parts	
Glass cleaning roller home sensor (PS13) Glass cleaning motor (M4)	DF control board (DFCB)

Step	Action
1	Wipe clean the glass surface of the DF original glass.
2	Check the glass cleaning roller unit for proper installation and correct if necessary.
3	Select [Service Mode] → [System 2] → [Split Line Detect. Setting], and change the setting.
4	Check the DFCB connector for proper connection and correct as necessary.
5	M4 operation check.
6	Change glass cleaning brush.
7	Change DFCB.

18.3.3 P-27: Transfer ATVC failure

Relevant parts	
High voltage unit (HV) Printer control board (PRCB)	2nd image transfer assy

Step	Action
1	Check that the spring does not come off during the pressure operation of the transfer roller and correct if necessary.
2	Check the contact at the joint of the transfer roller unit and HV. Clean the joint or correct if necessary.
3	Change HV.
4	Change PRCB.

19. TROUBLE CODE

19.1 Display procedure

- The machine's CPU performs a self-diagnostics function that, on detecting a malfunction, gives the corresponding malfunction code on the control panel.

A1UDF4E021DA

19.2 Trouble resetting procedure

- Different malfunction resetting procedures apply depending on the rank of the trouble code.

* List of malfunction resetting procedures

Trouble code rank	Resetting procedures
Rank A	• Trouble reset * Refer to the following procedure.
Rank B	• Opening/closing the right door
Rank C	• Turning main power switch OFF/ON

19.2.1 Trouble resetting procedure by Trouble Reset key

A. Use

- If the all troubles occur and the status would not be cleared by turning main power switch OFF and ON again, or opening and closing the right door, clear the status of the machine.
- To be used when the status would not be cleared by turning main power switch OFF and ON again, or opening and closing the right door in case of a trouble.

B. Procedure

1. Turn OFF the main power switch.
2. Turn main power switch ON while pressing the Utility/Counter key.
3. Touch [Trouble Reset].
4. Check to make sure that [OK] is displayed and the it has been reset.
5. After turning off the main power switch, turn it on again more than 10 seconds after and check if the machine starts correctly.

19.3 Trouble isolation function

- The trouble isolation function enables you to control MFP temporarily isolating faulty units and options where the trouble isolation function can be applied when trouble occurs. This allows you to continue using the other units that are not affected and reduce down time that continues until CE resolves the problem.
- This function can be selected for the following units and options.
  Tray 1, Tray 2, Tray 3, Tray 4, LCT, manual, Half-Fold/Tri-Fold Center Stapling, Staple, Scanner, ADF
- If a problem occurs with the units where the trouble isolation function can be applied, the control panel displays a trouble code and a key with which you decide whether to continue using the MFP. When you press down the key, the control panel displays the units that will be isolated as well as the next confirmation key with which you decide to continue.
- When you press down the confirmation key, the message on the control panel asks you to turn OFF and ON the sub power switch. After turning OFF and ON the sub power switch, the MFP starts operating, isolating the faulty units. The message on the control panel also tells that the MFP is working, isolating the faulty units.
- To temporarily isolate faulty units and continue using the MFP with the trouble isolation function, be sure to make the above mentioned control panel operation. The faulty units cannot be automatically isolated.

NOTE

- **The malfunction detection mechanism is not applied to units and options that are being isolated.**

19.4 List

Code	Item	Detection timing	Trouble isolation	Rank
C0001	LCT communication error	• Due to malfunctioning of the software or other causes, the watchdog timer triggers a reset when time is up.	—	B
C0202	Tray 1 feeder up/down abnormality	• The paper feed tray 1 upper limit sensor (PS12) is not blocked even after the lapse of a given period of time after the lifting motion has been started.	Tray 1	B
C0204	Tray 2 feeder up/down abnormality	• The paper feed tray 2 upper limit sensor (PS22) is not blocked even after the lapse of a given period of time after the lifting motion has been started.	Tray 2	B
C0206	Tray 3 lift-up failure	• The tray 3 upper limit sensor (PS33) is not blocked even after the set period of time has elapsed after the paper lift-up operation for the drawer began.	Tray 3	B
C0208	Tray 4 lift-up failure	• The tray 4 upper limit sensor (PS43) is not blocked even after the set period of time has elapsed after the paper lift-up operation for the drawer began.	Tray 4	B

Code	Item	Detection timing	Trouble isolation	Rank
C0209	LCT elevator motor failure	• The elevator motor sensor (PS5A) cannot detect both edges of H/L even after the set period of time has elapsed while the elevator motor (M55) is turning backward/forward (raise/lower).	LCT	B
C0210	LCT lift failure	• The lift-up upper limit sensor (PS54) is not blocked even after the set period of time has elapsed after the paper lift-up operation began. • The lift-up upper limit sensor (PS54) is not blocked even after the set pulse is detected by the elevator motor sensor (PS5A) after the paper lift-up operation began. • The lift-down lower limit sensor (PS5D) is not unblocked even after the set pulse is detected by the elevator motor sensor (PS5A) after the paper lift-up operation began. • The lift-up upper limit sensor (PS54) is not blocked even after the set period of time has elapsed after the paper lift-up operating. • The lift-down lower limit sensor (PS5D) is not blocked even after the set period of time has elapsed after the paper lift-down operation began. • The lift-down lower limit sensor (PS5D) is not blocked even after the set pulse is detected by the elevator motor sensor (PS5A) after the paper lift-down operation began. • The lift-up upper limit sensor (PS54) is not unblocked even after the set pulse is detected by the elevator motor sensor (PS5A) after the paper lift-down operation began. • The lift-down over run sensor (PS57) is blocked while the paper lift-down operating.	LCT	B
C0211	Manual feed up/down abnormality	• Paper does not unblock the manual lift-up position sensor (PS83) even after the transport motor (M1) rotates for a given period of time after the position is switched from stand by position at lift-up plate to the feed position. • The manual lift-up position sensor (PS83) is not blocked even after the transport motor (M1) rotates for a given period of time after the position is switched from stand by position at lift-up plate to the feed position.	Manual	B
C0212	LCT ejection failure	• The drawer cannot be determined to be out of position even after the set period of time has elapsed after the tray lock solenoid (SD51) is energized after the lowering operation is finished.	LCT	B

Code	Item	Detection timing	Trouble isolation	Rank
C0213	LCT shift gate malfunction	• The division board position sensor (PS5E) cannot be set to L even after the set period of time has elapsed after the operation of the division board position motor (M53) began with the division board position sensor (PS5E) set to L.	LCT	B
C0214	LCT shifting failure	• The shifter stop position sensor (PS5B) is not blocked even after the set period of time has elapsed after the shift operation began (shift to the right). • The shifter stop position sensor (PS5B) is not blocked even after the set pulse is detected by the shift motor sensor (PS58) after the shift operation began (shift to the right). • The shifter home position sensor (PS5C) is not unblocked even after the set pulse is detected by the shift motor pulse sensor (PS58) after the shift operation began (shift to the right). • The shifter home position sensor (PS5C) is not blocked even after the set period of time has elapsed after the return operation began (shift to the left). • The shifter home position sensor (PS5C) is not blocked even after the set pulse is detected by the shift motor pulse sensor (PS58) after the return operation began (shift to the left). • The shifter stop position sensor (PS5B) is not unblocked even after the set pulse is detected by the shift motor pulse sensor (PS58) after the return operation began (shift to the left).	LCT	B
C0215	LCT shift motor malfunction	• The shift motor sensor (PS58) cannot detect both edges of H/L even after the set period of time has elapsed while the shift motor (M54) is turning backward/forward (raise/lower).	LCT	B
C1004	FNS communication error	• When the FS control board (FSCB) is receiving data, a communication error is detected.	—	C
C1081	SD communication error	• When a communication error is detected between the FS control board (FSCB) and the SD control board (SDCB).	Half-Fold/ Tri-Fold/ Center Stapling	C
C1113	Center-staple lead edge stopper motor malfunction	<When FS-527+SD-509 is installed> • The leading edge stopper home sensor (PS45) is turned neither ON nor OFF even after the set period of time has elapsed after the leading edge stopper motor (M20) is turned ON.	Staple, Half-Fold/ Tri-Fold Center Stapling	B

Code	Item	Detection timing	Trouble isolation	Rank
C1114	Center-staple front adjust drive motor malfunction	<When FS-527+SD-509 is installed> • The center staple alignment home sensor/F (PS42) is turned neither ON nor OFF even after the set period of time has elapsed after the center staple alignment motor/F (M24) is turned ON.	Half-Fold/ Tri-Fold Center Stapling	B
C1115	Center-staple knife drive motor malfunction	<When FS-527+SD-509 is installed> • The center fold plate home sensor (PS47) is turned neither ON nor OFF even after the set period of time has elapsed after the center fold plate motor (M26) is turned ON.	Half-Fold/ Tri-Fold Center Stapling	B
C1116	Center-staple transfer motor malfunction	<When FS-527+SD-509 is installed> • The center fold roller motor (M25) does not reach the specified speed even after the set period of time has elapsed after it starts to operate.	Half-Fold/ Tri-Fold Center Stapling	B
C1150	Center-staple rear adjust drive motor malfunction	<When FS-527+SD-509 is installed> • The center staple alignment home sensor/R (PS41) is turned neither ON nor OFF even after the set period of time has elapsed after the center staple alignment motor/R (M23) is turned ON.	Half-Fold/ Tri-Fold Center Stapling	B
C1156	Center-staple paddle roller motor malfunction (trailing edge)	<When FS-527+SD-509 is installed> • Even after the set period of time has elapsed after the upper paddle motor (M21) starts running, a change of motor lock signal is not detected and neither the paper detection sensor/1 (PS43) nor the paper detection sensor/2 (PS44) is turned ON.	Half-Fold/ Tri-Fold Center Stapling	B
C1158	Center-staple paddle roller motor malfunction (leading edge)	<When FS-527+SD-509 is installed> • Even after the set period of time has elapsed after the lower paddle motor (M22) starts running, a change of motor lock signal is not detected and neither the paper detection sensor/1 (PS43) nor the paper detection sensor/2 (PS44) is turned ON.	Half-Fold/ Tri-Fold Center Stapling	B
C1181	Malfunctioning of belt up/ down movement	<When FS-529 is installed> • The belt position sensor (PS13) is not turned OFF after the set period of time has elapsed after the belt retract solenoid (SD5) is turned ON. • The belt position sensor (PS13) is not turned ON after the set period of time has elapsed after the conveyance motor/1 (M5) is turned ON.	Staple	B

Code	Item	Detection timing	Trouble isolation	Rank
C1182	Shift motor drive malfunction	<When JS-505 is installed> • The shift home sensor (PS6) is not blocked after the set period of time has elapsed after the shift motor (M2) is turned ON (start of moving to the home position.) • The shift home sensor (PS6) is not unblocked twice in a row after the set period of time has elapsed after the shift motor (M2) is turned ON (start of moving to the shift position.) <When FS-527 is installed> • When moving to the front (home) position: The tray 2 shift home sensor (PS25) is not turned ON even after the set period of time has elapsed after the tray 2 shift motor (M16) is turned ON. • When moving to the rear (shift) position: The tray 2 shift home sensor (PS25) is not turned OFF even after the set period of time has elapsed after the tray 2 shift motor (M16) is turned ON.	Staple	B
C1183	Elevate drive malfunction	<When FS-527 is installed> • During downward movement, the tray 2 upper limit sensor (PS24) is turned OFF and the tray 2 lower limit sensor (PS21) is turned ON. • The elevate motor (M15) lock signal remains set to H for a set period of time while the elevate motor (M15) is turning. • The tray 2 upper position switch (SW2) is turned ON even after the set period of time has elapsed while the elevate motor (M15) is energized. • The tray 2 lower position switch (SW3) is turned ON even after the set period of time has elapsed while the elevate motor (M15) is energized. <When FS-529 is installed> • When the exit tray is moving up: When the tray up/down motor (M2) starts rotating with the output of the tray lower limit sensor (PS6) being ON, PS6 is not turned OFF even after the set period of time has elapsed. • The paper surface detect sensor/1 (PS2) or the paper surface detect sensor/2 (PS3) is not turned ON even after the set period of time has elapsed after the tray up/down motor (M2) starts rotating. • When the exit tray is moving down: The tray lower limit sensor (PS6) is not turned ON even after the set period of time has elapsed after the tray up/down motor (M2) starts rotating.	—	B

Code	Item	Detection timing	Trouble isolation	Rank
C1190	Alignment plate motor drive malfunction	<When FS-527 is installed> • The alignment plate home sensor (PS17) is turned neither ON nor OFF even after the set period of time has elapsed after the alignment plate motor (M13) is turned ON.	—	B
	Alignment plate R drive malfunction	<When FS-529 is installed> • The alignment plate home sensor/R (PS9) is turned neither ON nor OFF even after the set period of time has elapsed after the alignment motor/R (M4) is turned ON.	—	B
C1191	Alignment plate F drive malfunction	<When FS-529 is installed> • The alignment plate home sensor/F (PS8) is turned neither ON nor OFF even after the set period of time has elapsed after the alignment motor/F (M3) is turned ON.	—	B
C1194	Leading edge stopper motor drive malfunction	<When FS-527 is installed> • The leading edge stopper home sensor (PS20) is turned neither ON nor OFF even after the set period of time has elapsed after the leading edge stopper motor (M14) is turned ON. <When FS-529 is installed> • The leading edge stopper home sensor (PS14) is not turned OFF after the set period of time has elapsed after the stapler motor (M8) is turned ON.	Staple	B
C11A1	Tray 2 exit roller pressure/ retraction malfunction	<When FS-527 is installed> • The exit roller pressure sensor (PS12) is turned neither ON nor OFF even after the set period of time has elapsed after the exit roller retraction motor (M9) is turned ON.	—	B
	Exit roller pressure/ retraction malfunction	<When FS-529 is installed> • The pick up roller position sensor (PS12) is turned neither ON nor OFF even after the set period of time has elapsed after the pick up roller position motor (M1) is turned ON.	—	B
C11A2	Accommodation roller pressure/ retraction malfunction	<When FS-527 is installed> • The accommodation roller pressure sensor (PS13) is turned neither ON nor OFF even after the set period of time has elapsed after the accommodation roller retraction motor (M10) is turned ON.	—	B
C11A7	Tray 3 exit roller pressure/ retraction malfunction	<When JS-603 is installed> • The tray 3 exit roller retraction sensor (PS35) is turned neither ON nor OFF even after the set period of time has elapsed after the tray 3 exit roller retraction motor (M17) is turned ON.	—	B

Code	Item	Detection timing	Trouble isolation	Rank
C11B0	Stapler movement drive malfunction	<When FS-527 is installed> • During home position search, neither the stapler home sensor/1 (PS18) nor the stapler home sensor/2 (PS19) is turned ON or OFF even after the set period of time has elapsed after the stapler movement motor (M11) is turned ON. <When FS-529 is installed> • During the home position search, the stapler home sensor (PS11) is not turned ON or OFF even after the set period of time has elapsed after the stapler movement motor (M7) is turned ON.	Staple	B
C11B2	Staple drive malfunction	<When FS-527 is installed> • The stapler home sensor is turned neither ON nor OFF even after the set period of time has elapsed after the stapler motor is turned ON. <When FS-529 is installed> • During the initial operation, the stapler home sensor is not turned ON even after the set period of time has elapsed after the stapler movement motor (M7) is turned ON. • The stapler home sensor is not turned ON after the set period of time has elapsed after the stapler motor (M8) is turned ON.	Staple	B
C11B5	Saddle stapler drive malfunction	<When FS-527+SD-509 is installed> • The center stapler home sensor is turned neither ON nor OFF even after the set period of time has elapsed after the center stapler motor is turned ON.	Half-Fold/ Tri-Fold Center Stapling	B
C11C0	Punch motor drive malfunction	<When FS-527+PK-517 is installed> • The punch home sensor/1 (PS100) is not turned ON even after the set period of time has elapsed while the punch motor/1 (M100) is energized.	—	B
C11E0	Duplex path switching motor drive malfunction	<When FS-527 is installed> • The duplex path switching sensor (PS3) is turned neither ON nor OFF even after the set period of time has elapsed after the duplex path switching motor (M2) is turned ON.	—	B
	Finisher route change malfunction	<When JS-505 is installed> • The route change home sensor (PS4) is not blocked after the set period of time has elapsed after the route change motor (M3) is turned ON (start of shifting to the lower tray route.) • The route change home sensor (PS4) is not unblocked after the set period of time has elapsed after the route change motor (M3) is turned ON (start of shifting to the upper tray route.)	—	B

Code	Item	Detection timing	Trouble isolation	Rank
C11E1	Upper lower path switching motor drive malfunction	<When FS-527 is installed> • The upper lower path switching sensor (PS26) is turned neither ON nor OFF even after the set period of time has elapsed after the upper lower path switching motor (M6) is turned ON.	—	B
C11E2	Tray 1 path switching motor drive malfunction	<When FS-527 is installed> • The tray 1 path switching home sensor (PS7) is turned neither ON nor OFF even after the set period of time has elapsed after the tray 1 path switching motor (M8) is turned ON.	—	B
C1301	Fan motor drive malfunction	<When FS-529 is installed> • While the motor is rotating, the fan lock signal remains L for the set period of time.	—	B
C1402	FS NVRAM memory error	<When FS-529 is installed> • When the main power switch is turned ON, malfunctioning of the non-volatile memory on the FS control board (FSCB) is detected.	—	—
C2201	Toner bottle motor's failure to turn	• The toner bottle home sensor (PS4) is not blocked even after the set period of time has elapsed after the toner bottle motor (M3) starts rotating. • The toner bottle home sensor (PS4) is not unblocked even after the set period of time has elapsed after the toner bottle motor (M3) starts rotating.	—	B
C2253	PC motor's failure to turn	• The motor lock signal remains HIGH for a predetermined continuous period of time while the motor is turning.	—	B
C2254	PC motor's turning at abnormal timing	• The motor lock signal remains LOW for a predetermined continuous period of time while the motor remains stationary.	—	B
C2350	Toner suction fan motor's failure to turn	• The motor lock signal remains HIGH for a predetermined continuous period of time while the motor is turning.	—	B
C2557	Abnormally low toner density detected TCR sensor	• When sampling data is determined in TC ratio calculation control, TCR sensor output is lower than a predetermined value for a predetermined number of times in a row even though there is toner in the sub hopper.	—	B
C2558	Abnormally high toner density detected TCR sensor	• TC ratio in the developing unit, which is determined by toner replenishing amount control mechanism, is a predetermined value or more for a given number of times consecutively.	—	B
C255C	TCR sensor adjustment failure	• TCR sensor automatic adjustment does not function properly, failing to adjust to an appropriate value.	—	B

Code	Item	Detection timing	Trouble isolation	Rank
C2564	TCR sensor failure	• Alarm signals for a TCR sensor are detected. This detection is used for detecting disconnection of TCR sensor board (TCRSB) connector.	—	B
C2650	Main backup media access error	• When an error is detected at the data reading process. • The machine writes and reads data, and judges that the data has error. Then the machine performs the same process and judges again that the data has error. • When counter values are read, error is detected. • The machine detects that it does not have EEPROM.	—	C
C3421	Fusing heaters trouble (center)	• Detected temperature of the heating roller thermistor (TH2; center) does not go up a given range of temperature even after a lapse of given period of time at warm up. • The warm-up is not completed even after the set period of time has elapsed after the warm-up is started.	—	A
C3423	Fusing heaters trouble (edge)	• Detected temperature of the heating roller thermistor (TH2; edge) does not go up a given range of temperature even after a lapse of given period of time at warm up. • The warm-up is not completed even after the set period of time has elapsed after the warm-up is started.	—	A
C3721	Fusing abnormally high temperature detection (center)	• Detected temperature of the heating roller thermistor (TH2; center) goes beyond a given temperature for a given period of time consecutively.	—	A
C3723	Fusing abnormally high temperature detection (edge)	• Detected temperature of the heating roller thermistor (TH2; edge) goes beyond a given temperature for a given period of time consecutively.	—	A
C3821	Fusing abnormally low temperature detection (center)	• Detected temperature of the heating roller thermistor (TH2; center) goes below a given temperature for a given period of time consecutively after warm up is completed.	—	A
C3823	Fusing abnormally low temperature detection (edge)	• Detected temperature of the heating roller thermistor (TH2; edge) goes below a given temperature for a given period of time consecutively after warm up is completed.	—	A
C4101	Polygon motor rotation trouble	• The polygon motor (M5) fails to turn stably even after the lapse of a given period of time after activating the polygon motor. • Motor lock signal detects HIGH for a given period time consecutively during the polygon motor (M5) is rotating.	—	B

Code	Item	Detection timing	Trouble isolation	Rank
C4501	Laser malfunction	• SOS signal is not detected even after the lapse of a given period of time after staring the laser output. • SOS signal is not detected for a given period of time during printing.	—	B
C5102	Transport motor's failure to turn	• The motor lock signal remains HIGH for a predetermined continuous period of time while the motor remains stationary.	—	B
C5103	Transport motor's turning at abnormal timing	• The motor lock signal remains LOW for a predetermined continuous period of time while the motor remains stationary.	—	B
C5351	Power supply cooling fan motor's failure to turn	• The fan lock signal remains HIGH for a predetermined continuous period of time while the motor remains stationary.	—	B
C5356	Cooling fan motor's failure to turn	• The fan lock signal remains HIGH for a predetermined continuous period of time while the motor remains stationary.	—	B
C5370	MFP control board cooling fan motor's failure to turn	• The fan lock signal remains HIGH for a predetermined continuous period of time while the motor remains stationary.	—	C
C5501	AC signal abnormality	• Zero cross signal is not detected for a given period of interval when AC frequency is measured with the power switch ON or when fusing heater is turned ON/OFF.	—	C
C5601	Engine control malfunction	• Engine control malfunction is detected with port monitor control.	—	C
C5602	FPGA configuration error	• When a configuration check is performed on the extended IC chip (FPGA) located on the printer control board (PRCB), error is detected.	—	C
C6102	Drive system home sensor malfunction	• The scanner home sensor (PS201) is unable to detect the scanner located at its home position. • The scanner home sensor (PS201) is unable to detect a scanner even when the scanner motor has been driven to move the scanner over the maximum travelling distance. • The scanner home sensor (PS201) detects the scanner when the scanner has moved the maximum travelling distance from the position, at which it blocks the scanner home sensor.	Scanner	B
C6103	Slider over running	• The scanner home sensor (PS201) detects the scanner at its home position during a period of time that begins with the time when a pre-scan command and a scan preparation command are executed and ends when a home return command is executed.	Scanner	B
C6704	Image input time out	• Image data is not input from the scanner to the MFP board (MFPB).	Scanner	C

Code	Item	Detection timing	Trouble isolation	Rank
C6751	CCD clamp/gain adjustment failure	• The adjustment value is 0 or 255 during a CCD clamp adjustment. • The peak value of the output data is 64 or less during a CCD gain adjustment.	Scanner	B
C6752	ASIC clock input error	• When starting the scanner, verification on reading and writing the predetermined value for image processing ASIC on CCD board (CCDB) was conducted, and verification failure was detected.	—	C
C6901	DSC board mount failure 1	• When MFP detects that DSC board is not properly installed.	—	C
C6902	DSC Bus check NG1-1	• When DSC bus check detects an error.	—	C
C6903	DSC Bus check NG1-2		—	C
C6911	Undetectable			
C6912				
C6913				
C6F01	Scanner sequence trouble 1	• The original transport interval becomes shorter than the designed value due to an original transport control error in original reading in ADF.	Scanner	C
C6F02	Reserved			
C6F03	Reserved			
C6F04	Reserved			
C6F05	Reserved			
C6F06	Reserved			
C6F07	Reserved			
C6F08	Reserved			
C6F09	Reserved			
C6F0A	Reserved			
C6FDC	Reserved			
C8101	Before reading pressure welding alienation mechanism	• During a pressure motion being performed, the reading roller release position sensor (PS12) output does not change from H to L. • During a retraction motion being performed, the reading roller release position sensor (PS12) output does not change from L to H.	—	B
C8107	Glass cleaning mechanism trouble	• The glass cleaning roller home sensor (PS13) is not turned ON after the set period of time has elapsed after the glass cleaning motor (M4) is turned ON.	—	B
C8302	Cooling fan trouble	• The lock signal continues to detect H during a given time while the DF cooling fan motor (FM1) is spinning	—	B
C9401	Exposure turning on the lamp trouble detection	• The output from the CCD sensor is a predetermined value or less during CCD sensor gain adjustment.	Scanner	A

Code	Item	Detection timing	Trouble isolation	Rank
C9402	Exposure turning on the lamp abnormally detection	• The average output value of the CCD sensor with the scanner at its standby position is a predetermined value or more at the end of a scan job.	Scanner	A
CA051	Standard controller configuration failure	• The controller of the MFP board (MFPB) is faulty.	—	C
CA052	Controller hardware error	• A controller hardware error is detected in the network I/F.	—	C
CA053	Controller start failure	• A controller start failure is detected in the controller interface.	—	C
CB001	For details, refer to “FAX TROUBLECODE.” See P.684		—	C
CB002			—	C
CB003			—	C
CB051			—	C
CB052			—	C
CB110			—	C
CB111			—	C
CB112			—	C
CB113			—	C
CB114			—	C
CB115			—	C
CB116			—	C
CB117			—	C
CB118			—	C
CB119			—	C
CB120			—	C
CB122			—	C
CB123			—	C
CB125			—	C
CB126			—	C
CB127			—	C
CB128			—	C
CB129			—	C
CB130			—	C
CB131			—	C
CB132			—	C
CB133			—	C
CB134			—	C
CB135			—	C
CB136			—	C
CB137			—	C
CB140			—	C
CB141			—	C

Code	Item	Detection timing	Trouble isolation	Rank
CB142	For details, refer to “FAX TROUBLECODE.” See P.684		—	C
CB143			—	C
CB144			—	C
CB145			—	C
CB146			—	C
CB150			—	C
CB151			—	C
CB152			—	C
CB153			—	C
CB154			—	C
CB160			—	C
CB161			—	C
CB162			—	C
CB163			—	C
CB164			—	C
CB165			—	C
CB166			—	C
CB167			—	C
CB168			—	C
CB169			—	C
CB170			—	C
CB171			—	C
CB172			—	C
CB173			—	C
CB174			—	C
CB175			—	C
CB176			—	C
CB177			—	C
CB178			—	C
CB179			—	C
CB180			—	C
CB181			—	C
CB182			—	C
CB183			—	C
CB184			—	C
CB185			—	C
CB186			—	C
CB187			—	C
CB188			—	C
CB190			—	C
CB191			—	C
CB192			—	C

Code	Item	Detection timing	Trouble isolation	Rank
CB193	For details, refer to “FAX TROUBLECODE.” See P.684		—	C
CB194			—	C
CB195			—	C
CB196			—	C
CC001	Vendor connection failure	• It is detected that communications with the vendor are interrupted for a given period of time or more with “Installed” selected for the setting of vendor installation.	—	C
CC151	ROM contents error upon startup (MSC)	• A fault is detected in a sequence of ROM contents check of the MFPB during starting	—	C
CC152	ROM contents error upon startup (scanner)	• A fault is detected in a sequence of ROM contents check of the MFPB during starting.	—	C
CC153	ROM contents error upon startup (PRT)	• A fault is detected in a sequence of ROM contents check of the PRCB during starting.	—	C
CC155	Finisher ROM error	• Data of flash ROM of the finishing options is determined to be faulty when the power is turned ON.	—	C
CC156	ADF ROM error	• Upgrade of the firmware has not been successful.	—	C
CC159	ROM contents error upon startup (DSC1)	• A fault is detected in a sequence of ROM contents check of the DSC board during starting.	—	C
CC15A	ROM contents error upon startup (DSC2)		—	C
CC15B	Flash ROM error (saddle)	• Data of flash ROM of the saddle is determined to be faulty when the power is turned ON.	—	C
CC163	ROM contents error (PRT)	• The wrong model of firmware is detected in the engine during the initial connection to the engine is being checked.	—	C
CC164	ROM contents error (MSC)	• The wrong model of firmware is detected in the MFP board when the main power switch is turned ON.	—	C
CC165	ROM contents error (ADF)	• When the power is turned ON, DF control board or firmware error is detected.	—	C

Code	Item	Detection timing	Trouble isolation	Rank
CC170	Dynamic link error during starting (AP0)	• A dynamic link error occurs in the program on the MFP board due to an insufficient memory space available, a ROM fault, or other reason when the main power switch is turned ON.	—	C
CC171	Dynamic link error during starting (AP1)		—	C
CC172	Dynamic link error during starting (AP2)		—	C
CC173	Dynamic link error during starting (AP3)		—	C
CC174	Dynamic link error during starting (AP4)		—	C
CC180	Dynamic link error during starting (LDR)		—	C
CC181	Dynamic link error during starting (IBR)		—	C
CC182	Dynamic link error during starting (IID)		—	C
CC183	Dynamic link error during starting (IPF)		—	C
CC184	Dynamic link error during starting (IMY)		—	C
CC185	Dynamic link error during starting (SPF)		—	C
CC186	Dynamic link error during starting (OAP)		—	C
CC190	Outline font load error	• An error occurred while loading the outline font.	—	C
CC191	Setting parameter load error (LDR)	• Upon startup, the processing of the loadable device driver setting data file failed. - RAM disk file creation failed. - Reading from the flash ROM failed. - An error occurred in API of the authentication module.	—	C
CC211	Authentication device general error	• When using the authentication device, authentication data is not to meet the specifications.	—	C
CC212	User validation error	• An error occurred while validating the user authentication information.	—	C
CC213	User registration error/ card information setting error	• IC card advanced settings data or authentication information data is not correct when starting-up the authentication device, setting the IC card advanced settings or registering/ editing the authentication information.	—	C
CC214	User information deletion error	• The deletion of the user information is uncompleted.	—	C
CC216	Acquisition failure of the number of trials/Initialize error of number of authentication	• An error occurred during user authentication using optional authentication unit AU-102.	—	C

Code	Item	Detection timing	Trouble isolation	Rank
CD002	JOB RAM save error	• The error in save of job data to the memory/hard disk and its read error are detected.	—	C
CD004	Hard disk access error (connection failure)	• Unable to communicate between the hard disk and printer control board (PRCB).	—	C
CD00F	Hard disk data transfer error	• Data transfer from the hard disk is faulty.	—	C
CD010	Hard disk unformat	• Unformatted hard disk is connected.	—	C
CD011	Hard disk out of specifications mounted	• A hard disk that falls outside the specifications is connected.	—	C
CD020	Hard disk verify error	• The data abnormality is detected by the HDD verify check.	—	C
CD030	Hard disk management information reading error	• The machine fails to read administrative information data saved in the hard disk.	—	C
CD041	HDD command execution error	• The error occurred inside the hard disk.	—	C
CD042			—	C
CD043			—	C
CD044			—	C
CD045			—	C
CD046			—	C
CD047	HDD SCSI library error	• The error occurred inside the hard disk.	—	C
CD048			—	C
CD049			—	C
CD04A			—	C
CD04B			—	C
CD201	File memory mounting error	• The file memory is not mounted. • The file has any abnormality.	—	C
CD202	Memory capacity discrepancy	• File memory capacity on the MFP board (MFPB) is not enough. • File memory capacity necessary for duplex printing is not enough during duplex unit mounting.	—	C
CD203	Memory capacity discrepancy 2	• File memory capacity on the MFP board (MFPB) is not enough.	—	C
CD211	PCI-SDRAM DMA operation failure	• Hardware related to the transfer of memory image of the MFP board (MFPB) fails to respond.	—	C
CD212	Compression/extraction timeout detection	• Hardware related to the BTC compression function of the MFP board (MFPB) fails to respond.	—	C
CD231	No FAX memory at FAX board mounting	• The DIMM for FAX is not mounted during the FAX board is mounting. • The FAX board is not mounted when the FAX board mounting is set ON at Service Mode.	—	C
CD241	Encryption ASIC error	• Initialization error of the encrypted ASIC is detected during the machine is starting.	—	C

Code	Item	Detection timing	Trouble isolation	Rank
CD242	Encryption ASIC mounting error	• The faulty of the installation of encrypted ASIC is detected during the machine is starting.	—	C
CD251	Undetectable			
CD252	Undetectable			
CD261	USB host board failure	• When a failure is detected in USB host board included in the local interface kit. • Non-standard USB device is connected.	—	C
CD271	i-Option activated and additional memory not installed	• While the i-Option is activated, the additional memory included in UK-203 is not installed.	—	C
CD272	i-Option activated and additional memory and HDD not installed	• While the i-Option is activated, the additional memory included in UK-203 and the HDD are not installed.	—	C
CD3##	NVRAM data error	• Abnormality is detected by the abnormal check of each NVRAM data.	—	—
CD370	NVRAM data multiple errors	• Multiple errors (Over 5) are detected by the abnormal check of each NVRAM data.	—	—
CD401	NACK command incorrect	• When abnormality is found in the communication of controller.	—	C
CD402	ACK command incorrect		—	C
CD403	Checksum error		—	C
CD404	Receiving packet incorrect		—	C
CD405	Receiving packet analysis error		—	C
CD406	ACK receiving timeout		—	C
CD407	Retransmission timeout		—	C
CDC##	Trouble related to security	• Contact the responsible people of KMBT before taking some countermeasures.	—	—
CE001	Abnormal message queue	• MFP board (MFPB) is faulty.	—	C
CE002	Message and method parameter failure		—	C
CE003	Task error		—	C
CE004	Event error		—	C
CE005	Memory access error		—	C
CE006	Header access error		—	C
CE007	DIMM initialize error		—	C
CEEE1	MFP board malfunction	• MFP board (MFPB) is faulty.	—	C
CEEE2	Scanner section malfunction	• A scanner part is faulty.	—	A
CEEE3	Printer control board malfunction	• Printer control board (PRCB) is faulty.	—	A

- The machine displays an abort code (CF###) on the control panel as it becomes unable to process tasks properly through its software control.
- When the system program is aborted, check the electrical component, unit, option, and connection relating to the specific type of the abort condition.

Code	Item		Relevant electrical components, units, and options	Rank
CF001	CT_singleList table abnormal	An exceptional instance occurred due to the unexpected parameter in the system F/W.	• MFP board (MFPB)	C
CF004	CT_queue full abnormal			C
CF011	Array link abnormal			C
CF012	FAT link abnormal			C
CF013	File size abnormal			C
CF021	setDelayMessage Table OverFlow			C
CF023	MsgQue OverFlow			C
CF033	setDivTbl() limitation over			C
CF112	Compress table OverFlow	Compression malfunctions		C
CF113	Compress table check			C
CF211	setParameterBandColorPlane() Table OverFlow	An exceptional instance occurred due to the unexpected parameter in the system F/W.		C
CF300	IR Bus Check Timeout	Image transfer error on IR input bus		C
CF411	Parity error	Communication error (between IR-systems)		C
CF421	Overrun error			C
CF431	Parity error + Overrun error			C
CF441	Framing error			C
CF451	Parity error + Framing error			C
CF461	Overrun error + Framing error			C
CF471	Parity error + Overrun error + Framing error			C
CF412	Parity error			C
CF422	Overrun error			C
CF432	Parity error + Overrun error			C
CF442	Framing error			C
CF452	Parity error + Framing error			C
CF462	Overrun error + Framing error			C
CF472	Parity error + Overrun error + Framing error			C
CF510	Parity error			C

Code	Item		Relevant electrical components, units, and options	Rank
CF520	Framing error	Communication error (IR detected)	• MFP board (MFPB)	C
CF530	Parity error + Framing error			C
CF540	Overrun error			C
CF550	Parity error + Overrun error			C
CF560	Overrun error + Framing error			C
CF570	Parity error + Overrun error + Framing error			C
CF580	Frame distortion of ADF			C
CF600	Report receiving of print start that is out of sequence		• MFP board (MFPB)/ Engine	C
CF601	Report receiving of paper feeding that is out of sequence			C
CF604	Outside IF/Command queue		• MFP board (MFPB)	C
CF614	“Output sequence” queue	An exceptional instance occurred due to the unexpected parameter in the system F/W.		C
CF624	Panel LCD date queue			C
CF704	Common data “Delete-waiting HDD accumulated job ID” queue			C
CF714	IRC/Command queue			C
CF724	Engine/Command queue		• MFP board (MFPB)/ Engine	C
CF734	Panel/Command queue		• MFP board (MFPB)/ Control Panel	C
CF744	File memory transfer start-waiting command queue		• MFP board (MFPB)	C
CF754	File memory compression requesting command queue			C
CF764	Panel instruction delete job queue			C
CF774	Warning delete job queue			C
CF784	Application instruction delete job queue			C
CF794	Output page information for duplex back side queue			C
CF7A4	Paper feed completion output pate information queue			C
CF7B4	Exposure compaction output page information queue			C
CF7C4	Pre-discharge completion output page information queue			C
CF7D4	Touch panel coordinate data queue			C
CF7E4	Direct key data queue			C
CF7F4	Scan sequence queue			C
CF802	SIO sending port...ENG		• MFP board (MFPB)/ Engine	C

Code	Item		Relevant electrical components, units, and options	Rank
CF806	SIO sending port...IRC		• MFP board (MFPB)	C
CF807	SIO sending port...ADF			C
CF808	Transmission buffer overflow (DSC1)		• MFP board (MFPB)/ DSC board (SC-507)	C
CF809	Unsupported option trouble			
CF812	Unsupported option trouble			
CF815	SIO sending port...PIC/PIC terminal		• MFP board (MFPB)	C
CF8ED	SIO sending port...EPNet			C
CF902	SIO receiving port...ENG		• MFP board (MFPB)/ Engine	C
CF906	SIO receiving port...IRC		• MFP board (MFPB)	C
CF907	SIO receiving port...ADF			C
CF908	Reception buffer overflow (DSC1)		• MFP board (MFPB)/ DSC board (SC-507)	
CF909	Unsupported option trouble			
CF912	Unsupported option trouble			
CF915	SIO receiving port...PIC/PIC terminal		• MFP board (MFPB)	C
CF9ED	SIO receiving port...EPNet			C
CFA01	getOneImgTransInfoFromTh() No applied thread	An exceptional instance occurred due to the unexpected parameter in the system F/W.		C
CFA03	setTransBandAndRepeatNum() error			C
CFA06	getOneImgIndexNumFromTh() No applied thread			C
CFA11	cancelTransExec() No applied thread			C
CFA12	ImgTransInfo No space			C
CFA13	Clear Buffer Sequence error			C
CFA14	Thread software error		• Whole electrical components, units, and options	C
CFA15	Global semaphore time out (ten seconds)		• MFP board (MFPB)	C
CFA16	Thread software error (upper parameter error)			C
CFA50	IGC control error	DB error		C
CFA51		IGC internal error		C
CFB00	ASIC200 first sheet DMA00		• MFP board (MFPB)/ DIMM0/DIMM1	C
CFB01	ASIC200 first sheet DMA01			C
CFB02	ASIC200 first sheet DMA02			C
CFB03	ASIC200 first sheet DMA03			C

Code	Item	Relevant electrical components, units, and options	Rank
CFB04	ASIC200 first sheet DMA04	• MFP board (MFPB)/ DIMM0/DIMM1	C
CFB05	ASIC200 first sheet DMA05		C
CFB06	ASIC200 first sheet DMA06		C
CFB07	ASIC200 first sheet DMA07		C
CFB08	ASIC200 first sheet DMA08		C
CFB09	ASIC200 first sheet DMA09		C
CFB0A	ASIC200 first sheet DMA10		C
CFB0B	ASIC200 first sheet DMA11		C
CFB0C	ASIC200 first sheet DMA12		C
CFB0D	ASIC200 first sheet DMA13		C
CFB0E	ASIC200 first sheet DMA14		C
CFB0F	ASIC200 first sheet DMA15		C
CFB10	ASIC200 first sheet DMA16		C
CFB11	ASIC200 first sheet DMA17		C
CFB12	ASIC200 first sheet DMA18		C
CFB13	ASIC200 first sheet DMA19		C
CFB14	ASIC200 first sheet DMA20		C
CFB15	ASIC200 first sheet DMA21		C
CFB16	ASIC200 first sheet DMA22		C
CFB17	ASIC200 first sheet DMA23		C
CFB18	ASIC200 first sheet DMA24		C
CFB19	ASIC200 first sheet DMA25		C
CFB1A	ASIC200 first sheet DMA26		C
CFB1B	ASIC200 first sheet DMA27		C
CFB1C	ASIC200 first sheet DMA28		C
CFB1D	ASIC200 first sheet DMA29		C
CFB1E	ASIC200 first sheet DMA30		C
CFB1F	ASIC200 first sheet DMA31		C
CFB70	ASIC200 first sheet interruption		C
CFB80	ASIC200 first sheet common register setting		C
CFBA0	ASIC200 first sheet BTC compression/extension unit		C
CFC00	ASIC200 first sheet DMA00 error interruption		C
CFC01	ASIC200 first sheet DMA01 error interruption		C
CFC02	ASIC200 first sheet DMA02 error interruption		C
CFC03	ASIC200 first sheet DMA03 error interruption		C
CFC04	ASIC200 first sheet DMA04 error interruption		C
CFC05	ASIC200 first sheet DMA05 error interruption		C
CFC06	ASIC200 first sheet DMA06 error interruption		C
CFC07	ASIC200 first sheet DMA07 error interruption		C
CFC08	ASIC200 first sheet DMA08 error interruption		C
CFC09	ASIC200 first sheet DMA09 error interruption		C

Code	Item	Relevant electrical components, units, and options	Rank
CFC0A	ASIC200 first sheet DMA10 error interruption	• MFP board (MFPB)/ DIMM0/DIMM1	C
CFC0B	ASIC200 first sheet DMA11 error interruption		C
CFC0C	ASIC200 first sheet DMA12 error interruption		C
CFC0D	ASIC200 first sheet DMA13 error interruption		C
CFC0E	ASIC200 first sheet DMA14 error interruption		C
CFC0F	ASIC200 first sheet DMA15 error interruption		C
CFC10	ASIC200 first sheet DMA16 error interruption		C
CFC11	ASIC200 first sheet DMA17 error interruption		C
CFC12	ASIC200 first sheet DMA18 error interruption		C
CFC13	ASIC200 first sheet DMA19 error interruption		C
CFC14	ASIC200 first sheet DMA20 error interruption		C
CFC15	ASIC200 first sheet DMA21 error interruption		C
CFC16	ASIC200 first sheet DMA22 error interruption		C
CFC17	ASIC200 first sheet DMA23 error interruption		C
CFC18	ASIC200 first sheet DMA24 error interruption		C
CFC19	ASIC200 first sheet DMA25 error interruption		C
CFC1A	ASIC200 first sheet DMA26 error interruption		C
CFC1B	ASIC200 first sheet DMA27 error interruption		C
CFC1C	ASIC200 first sheet DMA28 error interruption		C
CFC1D	ASIC200 first sheet DMA29 error interruption		C
CFC1E	ASIC200 first sheet DMA30 error interruption		C
CFC1F	ASIC200 first sheet DMA31 error interruption		C
CFC20	ASIC200 watchdog timer error interruption		C
CFC21	ASIC200 first sheet image output interface 1 had under-run		C
CFC22	ASIC200 first sheet image input interface had overflow		C
CFC23	ASIC200 first sheet LCD output interface had underrun		C
CFC24	ASIC200 first sheet JBIG core detected unknown marker		C
CFC25	ASIC200 first sheet JBIG core detected SC count overflow		C
CFC26	ASIC200 first sheet SDC slave illegal access error occurred		C
CFC27	ASIC200 first sheet memory master access had Completer Abort		C
CFC28	ASIC200 first sheet memory master access had Unsupported Request		C
CFC29	ASIC200 first sheet memory master access had Completion Timeout		C
CFC2A	ASIC200 first sheet memory master access had Poisoned TLP		C

Code	Item	Relevant electrical components, units, and options	Rank
CFC2B	ASIC200 first sheet memory target access had Unsupported Request	• MFP board (MFPB)/ DIMM0/DIMM1	C
CFC2C	ASIC200 first sheet memory target access had Poisoned TLP		C
CFC2D	ASIC200 first sheet config target access had Unsupported Request		C
CFC2E	ASIC200 first sheet config target access had Poisoned TLP		C
CFCC0	CPS2007 PCI slave ileagal access error occurred		C
CFCC1	CPS2007 watchdog timer error occurred		C
CFCC2	CPS2007 address parity error occurred		C
CFCC3	CPS2007 slave write data parity error occurred		C
CFCC4	CPS2007 slave read data parity error occurred		C
CFCD0	PIC2007 PCI slave illegal access error occurred		C
CFCD1	PIC2007 address parity error occurred		C
CFCD2	PIC2007 slave write data parity error occurred		C
CFCD3	PIC2007 slave read data parity error occurred		C
CFCE0	ASIC22 watchdog timer error occurred		C
CFCE1	ASIC22 local bus error occurred		C
CFCE2	ASIC22 another type of error occurred		C
CFD00	ASIC200 first sheet DMA00 time out		C
CFD01	ASIC200 first sheet DMA01 time out		C
CFD02	ASIC200 first sheet DMA02 time out		C
CFD03	ASIC200 first sheet DMA03 time out		C
CFD04	ASIC200 first sheet DMA04 time out		C
CFD05	ASIC200 first sheet DMA05 time out		C
CFD06	ASIC200 first sheet DMA06 time out		C
CFD07	ASIC200 first sheet DMA07 time out		C
CFD08	ASIC200 first sheet DMA08 time out		C
CFD09	ASIC200 first sheet DMA09 time out		C
CFD0A	ASIC200 first sheet DMA10 time out		C
CFD10	ASIC200 first sheet DMA16 time out		C
CFD11	ASIC200 first sheet DMA17 time out		C
CFD12	ASIC200 first sheet DMA18 time out		C
CFD13	ASIC200 first sheet DMA19 time out		C
CFD14	ASIC200 first sheet DMA20 time out		C
CFD15	ASIC200 first sheet DMA21 time out		C
CFD16	ASIC200 first sheet DMA22 time out		C
CFD17	ASIC200 first sheet DMA23 time out		C
CFD18	ASIC200 first sheet DMA24 time out		C
CFD19	ASIC200 first sheet DMA25 time out		C
CFD1A	ASIC200 first sheet DMA26 time out		C

Code	Item	Relevant electrical components, units, and options	Rank
CFD1B	ASIC200 first sheet DMA27 time out	• MFP board (MFPB)/ DIMM0/DIMM1	C
CFD1C	ASIC200 first sheet DMA28 time out		C
CFD1D	ASIC200 first sheet DMA29 time out		C
CFD1E	ASIC200 first sheet DMA30 time out		C
CFD1F	ASIC200 first sheet DMA31 time out		C
CFE00	ASIC200 first sheet DMA00 time out		C
CFE01	ASIC200 first sheet DMA01 time out		C
CFE02	ASIC200 first sheet DMA02 time out		C
CFE03	ASIC200 first sheet DMA03 time out		C
CFE04	ASIC200 first sheet DMA04 time out		C
CFE05	ASIC200 first sheet DMA05 time out		C
CFE06	ASIC200 first sheet DMA06 time out		C
CFE07	ASIC200 first sheet DMA07 time out		C
CFE08	ASIC200 first sheet DMA08 time out		C
CFE09	ASIC200 first sheet DMA09 time out		C
CFE0A	ASIC200 first sheet DMA10 time out		C
CFE0B	ASIC200 first sheet DMA11 time out		C
CFE0C	ASIC200 first sheet DMA12 time out		C
CFE0D	ASIC200 first sheet DMA13 time out		C
CFE0E	ASIC200 first sheet DMA14 time out		C
CFE0F	ASIC200 first sheet DMA15 time out		C
CFE10	ASIC200 first sheet DMA16 time out		C
CFE11	ASIC200 first sheet DMA17 time out		C
CFE12	ASIC200 first sheet DMA18 time out		C
CFE13	ASIC200 first sheet DMA19 time out		C
CFE14	ASIC200 first sheet DMA20 time out		C
CFE15	ASIC200 first sheet DMA21 time out		C
CFE16	ASIC200 first sheet DMA22 time out		C
CFE17	ASIC200 first sheet DMA23 time out		C
CFE18	ASIC200 first sheet DMA24 time out		C
CFE19	ASIC200 first sheet DMA25 time out		C
CFE1A	ASIC200 first sheet DMA26 time out		C
CFE1B	ASIC200 first sheet DMA27 time out		C
CFE1C	ASIC200 first sheet DMA28 time out		C
CFE1D	ASIC200 first sheet DMA29 time out		C
CFE1E	ASIC200 first sheet DMA30 time out		C
CFE1F	ASIC200 first sheet DMA31 time out		C
CFF00	ASIC200 first sheet DMA00 time out		C
CFF01	ASIC200 first sheet DMA01 time out		C
CFF02	ASIC200 first sheet DMA02 time out		C
CFF03	ASIC200 first sheet DMA03 time out		C

Code	Item	Relevant electrical components, units, and options	Rank
CFF04	ASIC200 first sheet DMA04 time out	• MFP board (MFPB)/ DIMM0/DIMM1	C
CFF05	ASIC200 first sheet DMA05 time out		C
CFF06	ASIC200 first sheet DMA06 time out		C
CFF07	ASIC200 first sheet DMA07 time out		C
CFF08	ASIC200 first sheet DMA08 time out		C
CFF09	ASIC200 first sheet DMA09 time out		C
CFF0A	ASIC200 first sheet DMA10 time out		C
CFF0B	ASIC200 first sheet DMA11 time out		C
CFF0C	ASIC200 first sheet DMA12 time out		C
CFF0D	ASIC200 first sheet DMA13 time out		C
CFF0E	ASIC200 first sheet DMA14 time out		C
CFF0F	ASIC200 first sheet DMA15 time out		C
CFF10	ASIC200 first sheet DMA16 time out		C
CFF11	ASIC200 first sheet DMA17 time out		C
CFF12	ASIC200 first sheet DMA18 time out		C
CFF13	ASIC200 first sheet DMA19 time out		C
CFF14	ASIC200 first sheet DMA20 time out		C
CFF15	ASIC200 first sheet DMA21 time out		C
CFF16	ASIC200 first sheet DMA22 time out		C
CFF17	ASIC200 first sheet DMA23 time out		C
CFF18	ASIC200 first sheet DMA24 time out		C
CFF19	ASIC200 first sheet DMA25 time out		C
CFF1A	ASIC200 first sheet DMA26 time out		C
CFF1B	ASIC200 first sheet DMA27 time out		C
CFF1C	ASIC200 first sheet DMA28 time out		C
CFF1D	ASIC200 first sheet DMA29 time out		C
CFF1E	ASIC200 first sheet DMA30 time out		C
CFF1F	ASIC200 first sheet DMA31 time out		C

19.5 Solution

19.5.1 C0001: LCT communication error

Relevant electrical parts	
PC control board (PCCB51)	

Step	Action	WIRING DIAGRAM	
		Control signal	Location (Electrical components)
1	Turn OFF the main power switch, wait for 10 sec. or more, and turn ON the main power switch.	—	—
2	PCCB51 replacement	—	—

19.5.2 C0202: Tray 1 feeder up/down abnormality

Relevant parts	
Tray 1 lift-up motor (M11) Tray 1 upper limit sensor (PS12)	Printer control board (PRCB)

Step	Action	WIRING DIAGRAM	
		Control signal	Location (Electrical component)
1	Check the connector between M11-PRCB CN12 for proper connection and correct as necessary.	—	—
2	Check the connector of M11 for proper drive coupling and correct as necessary.	—	—
3	Check the connector between PS12-relay CN1-PRCB CN13 for proper connection and correct as necessary.	—	—
4	PS12 I/O check, sensor check	PRCB CN13-5 (ON)	C-2 C-3
5	M11 operation check	PRCB CN12-18~19	K-8
6	Change M11	—	—
7	Change PRCB	—	—

19.5.3 C0204: Tray 2 feeder up/down abnormality

Relevant parts	
Tray 2 lift-up motor (M21) Tray 2 upper limit sensor (PS22)	Printer control board (PRCB)

Step	Action	WIRING DIAGRAM	
		Control signal	Location (Electrical component)
1	Check the connector between M21-PRCB CN11 for proper connection and correct as necessary.	—	—
2	Check the connector of M21 for proper drive coupling and correct as necessary.	—	—
3	Check the connector between PS22-relay CN6-PRCB CN14 for proper connection and correct as necessary.	—	—
4	PS22 I/O check, sensor check	PRCB CN14-5 (ON)	C-4 to 5 C-6
5	M21 operation check	PRCB CN11-18~19	K-5
6	Change M21	—	—
7	Change PRCB	—	—

19.5.4 C0206: Tray 3 lift-up failure

19.5.5 C0208: Tray 4 lift-up failure

Relevant parts	
Tray 3 lift-up motor (M33) Tray 4 lift-up motor (M43) Tray 3 upper limit sensor (PS33)	PC control board (PCCB31) Printer control board (PRCB) Tray 4 upper limit sensor (PS43)

Step	Action	WIRING DIAGRAM	
		Control signal	Location (Electrical component)
1	Check the connector between M33-PCCB31 CN4 for proper connection and correct as necessary.	—	—
2	Check the connector between M43-PCCB31 CN8 for proper connection and correct as necessary.	—	—
3	Check the connector between PS33-relay CN18-PCCB31 CN6 for proper connection and correct as necessary.	—	—
4	Check the connector between PS43-relay CN18-PCCB31 CN10 for proper connection and correct as necessary.	—	—
5	Check the connector of each motor for proper drive coupling, and correct as necessary.	—	—
6	PS33 I/O check, sensor check	PCCB31 CN6-3 (ON)	PC-208 B-1
7	PS43 I/O check, sensor check	PCCB31 CN10-3 (ON)	PC-208 G-4
8	M33 operation check	PCCB31 CN4-4 (ON)	PC-208 B-4
9	M43 operation check	PCCB31 CN8-12 (ON)	PC-208 G-1
10	Change PRCB31	—	—
11	Change PRCB	—	—

19.5.6 C0209: LCT elevator motor failure

Relevant parts	
Elevator motor (M55) Elevator motor sensor (PS5A)	PC relay board (PCREYB) PC control board (PCCB51)

Step	Action	WIRING DIAGRAM	
		Control signal	Location (Electrical component)
1	Check the connector between M55-PCREYB CN2 for proper connection and correct as necessary.	—	—
2	Check the connector between PS5A-PCREYB CN2 for proper connection and correct as necessary.	—	—
3	Check the connector of M55 for proper drive coupling, and correct as necessary.	—	—
4	PS5A I/O check, sensor check	PCREYB CN2<A>-5 (ON)	PC-409 K-5
5	M55 operation check	PCREYB CN2<B>-6 to 7	PC-409 K-6
6	Change PCREYB	—	—
7	Change PCCB	—	—

19.5.7 C0210: LCT lift failure

Relevant parts	
Lift-up upper limit sensor (PS54) Lift-down lower limit sensor (PS5D) Elevator motor sensor (PS5A) Lift-down over run sensor (PS57)	PC control board (PCCB51)

Step	Action	WIRING DIAGRAM	
		Control signal	Location (Electrical component)
1	Check the connector between PS54-relay CN20-PCCB51 PJ5 for proper connection and correct as necessary.	—	—
2	Check the connector between PS5D-PCREYB CN2 for proper connection and correct as necessary.	—	—
3	Check the connector between PS5A-PCREYB CN2 for proper connection and correct as necessary.	—	—
4	Check the connector between PS57-PCREYB CN2 for proper connection and correct as necessary.	—	—
5	PS54 I/O check, sensor check	PCCB51 PJ5-12 (ON)	PC-409 G-8
6	PS5D I/O check, sensor check	PCREYB CN2<A>-9 (ON)	PC-409 K-3 to 4
7	PS5A I/O check, sensor check	PCREYB CN2<A>-5 (ON)	PC-409 K-5
8	PS57 I/O check, sensor check	REYB CN2<A>-2 (ON)	PC-409 K-6
9	Change PCCB51	—	—

19.5.8 C0211: Manual feed up/down abnormality

Relevant parts	
Transport motor (M1) Manual pick-up solenoid (SD81) Manual lift-up position sensor (PS83)	Printer control board (PRCB)

Step	Action	WIRING DIAGRAM	
		Control signal	Location (Electrical component)
1	Check the connector between M1-PRCB CN3 for proper connection and correct as necessary.	—	—
2	Check the connector of M1 for proper drive coupling and correct as necessary.	—	—
3	Check the connector between PS83-PRCB CN9 for proper connection and correct as necessary.	—	—
4	Check the connector between SD81-relay CN99-relay CN15-PRCB CN9 for proper connection and correct as necessary.	—	—
5	PS83 I/O check, sensor check	PRCB CN9-7 (ON)	C-10
6	SD81 operation check	PRCB CN9-4 (ON)	C-10
7	M1 operation check	PRCB CN3-4 (REM) PRCB CN3-7 (LOCK)	C-16
8	Change M1	—	—
9	Change PRCB	—	—

19.5.9 C0212: LCT lock release failure

Relevant parts	
Tray lock solenoid (SD51)	PC control board (PCCB51)

Step	Action	WIRING DIAGRAM	
		Control signal	Location (Electrical component)
1	Check the connector between SD51-PCCB51 PJ7 for proper connection and correct as necessary.	—	—
2	SD51 operation check	PCCB51 PJ7-4 (ON)	PC-409 G-10
3	Change PCCB51	—	—

19.5.10 C0213: LCT shift gate operation failure

Relevant parts	
Division board position sensor (PS5E) Division board position motor (M53)	PC control board (PCCB51)

Step	Action	WIRING DIAGRAM	
		Control signal	Location (Electrical component)
1	Check the connector between PS5E-PCREYB CN2<B> for proper connection and correct as necessary.	—	—
2	Check the connector between M53-PCREYB CN2<B> for proper connection and correct as necessary.	—	—
3	Check the connector of M53 for proper drive coupling, and correct as necessary.	—	—
4	PS5E I/O check, sensor check	PCREYB CN2<B>-1 (ON)	PC-409 K-7
5	M53 operation check	PCREYB CN2<B>-2~3	PC-409 K-7
6	Change PCCB51	—	—

19.5.11 C0214: LCT shift failure

Relevant parts	
Shift motor sensor (PS58) Shifter stop position sensor (PS5B) Shifter home position sensor (PS5C)	PC control board (PCCB51)

Step	Action	WIRING DIAGRAM	
		Control signal	Location (Electrical component)
1	Check the connector between PS58-PCREYB CN2<A> for proper connection and correct as necessary.	—	—
2	Check the connector between PS5B-PCREYB CN2<A> for proper connection and correct as necessary.	—	—
3	Check the connector between PS5C-PCREYB CN2<A> for proper connection and correct as necessary.	—	—
4	PS58 I/O check, sensor check	PCREYB CN2<A>-3 (ON)	PC-409 K-6
5	PS5B I/O check, sensor check	PCREYB CN2<A>-7 (ON)	PC-409 K-4
6	PS5C I/O check, sensor check	PCREYB CN2<A>-8 (ON)	PC-409 K-4
7	Change PCCB51	—	—

19.5.12 C0215: LCT shift motor failure

Relevant parts	
Shift motor (M54) Shift motor sensor (PS58)	PC control board (PCCB51)

Step	Action	WIRING DIAGRAM	
		Control signal	Location (Electrical component)
1	Check the connector between M54-PCREYB CN2<B> for proper connection and correct as necessary.	—	—
2	Check the connector between PS58-PCREYB CN2<A> for proper connection and correct as necessary.	—	—
3	Check the connector of M54 for proper drive coupling, and correct as necessary.	—	—
4	PS58 I/O check, sensor check	PCREYB CN2<A>-3 (ON)	PC-409 K-6
5	M54 operation check	PCREYB CN2<B>-4 to 5 (ON)	PC-409 K-7
6	Change PCCB51	—	—

19.5.13 C1004: FNS communication error

Relevant parts	
FS control board (FSCB)	

Step	Action	WIRING DIAGRAM	
		Control signal	Location (Electrical component)
1	Disconnect and then connect the power cord. Turn OFF the main power switch, wait for 10 sec. or more, and turn ON the main power switch.	—	—
2	Rewrite the firmware.	—	—
3	JSCB F1 conduction check	—	—
4	JSCB F2 conduction check	—	—
5	Change FSCB	—	—

19.5.14 C1081: SD communication error

Relevant parts	
SD drive board (SDDB) FS control board (FSCB)	

Step	Action	WIRING DIAGRAM	
		Control signal	Location (Electrical component)
1	Disconnect and then connect the power cord. Turn OFF the main power switch, wait for 10 sec. or more, and turn ON the main power switch.	—	—
2	Rewrite the firmware.	—	—
3	Change SDDB	—	—
4	Change FSCB	—	—

19.5.15 C1113: Center-staple lead edge stopper motor malfunction

Relevant parts	
Leading edge stopper motor (M20) Leading edge stopper home sensor (PS45)	SD drive board (SDDB) FS control board (FSCB)

Step	Action	WIRING DIAGRAM	
		Control signal	Location (Electrical component)
1	Check the connector between M20-SDDB PJ8 for proper connection and correct as necessary.	—	—
2	Check the connector between PS45-SDDB PJ10 for proper connection and correct as necessary.		
3	Check the connector of M20 for proper drive coupling, and correct as necessary.	—	—
4	PS45 I/O check, sensor check	SDDB PJ10-3 (ON)	SD-509 G-6
5	M20 operation check	SDDB PJ8-1 to 4	SD-509 B-5
6	Change M20	—	—
7	Change SDDB	—	—
8	Change FSCB	—	—

19.5.16 C1114: Center-staple front adjust drive motor malfunction

Relevant parts	
Center staple alignment motor/F (M24) Center staple alignment home sensor/F (PS42)	SD drive board (SDDB) FS control board (FSCB)

Step	Action	WIRING DIAGRAM	
		Control signal	Location (Electrical component)
1	Check the connector between M24-SDDB PJ7 for proper connection and correct as necessary.	—	—
2	Check the connector between PS42-SDDB PJ9 for proper connection and correct as necessary.	—	—
3	Check the connector of M24 for proper drive coupling, and correct as necessary.	—	—
4	PS42 I/O check, sensor check	SDDB PJ9-6 (ON)	SD-509 G-2
5	M24 operation check	SDDB PJ7-1 to 4	SD-509 G-3
6	Change M24	—	—
7	Change SDDB	—	—
8	Change FSCB	—	—

19.5.17 C1115: Center-staple knife drive motor malfunction

Relevant parts	
Center fold plate motor (M26) Center fold plate home sensor (PS47)	SD drive board (SDDB) FS control board (FSCB)

Step	Action	WIRING DIAGRAM	
		Control signal	Location (Electrical component)
1	Check the connector between M26-SDDB PJ2 for proper connection and correct as necessary.	—	—
2	Check the connector between PS47-SDDB PJ10 for proper connection and correct as necessary.	—	—
3	Check the connector of M26 for proper drive coupling, and correct as necessary.	—	—
4	PS47 I/O check, sensor check	SDDB PJ10-6 (ON)	SD-509 G-6
5	M26 operation check	SDDB PJ2-1 (CW) SDDB PJ2-3 (CCW)	SD-509 B-4
6	Change M26	—	—
7	Change SDDB	—	—
8	Change FSCB	—	—

19.5.18 C1116: Center-staple transfer motor malfunction

Relevant parts	
Center fold roller motor (M25)	SD drive board (SDDB) FS control board (FSCB)

Step	Action	WIRING DIAGRAM	
		Control signal	Location (Electrical component)
1	Check the connector between M25-SDDB PJ4 for proper connection and correct as necessary.	—	—
2	Check the connector of M25 for proper drive coupling, and correct as necessary.	—	—
3	M25 operation check	SDDB PJ4-1 to 11	SD-509 B-3
4	Change M25	—	—
5	Change SDDB	—	—
6	Change FSCB	—	—

19.5.19 C1150: Center-staple rear adjust drive motor malfunction

Relevant parts	
Center staple alignment motor/R (M23) Center staple alignment home sensor/R (PS41)	SD drive board (SDDB) FS control board (FSCB)

Step	Action	WIRING DIAGRAM	
		Control signal	Location (Electrical component)
1	Check the connector between M23-SDDB PJ7 for proper connection and correct as necessary.	—	—
2	Check the connector between PS41-SDDB PJ9 for proper connection and correct as necessary.	—	—
3	Check the connector of M23 for proper drive coupling, and correct as necessary.	—	—
4	PS41 I/O check, sensor check	SDDB PJ9-3 (ON)	SD-509 G-2
5	M23 operation check	SDDB PJ7-5 to 8	SD-509 G-2
6	Change M23	—	—
7	Change SDDB	—	—
8	Change FSCB	—	—

19.5.20 C1156: Center-staple paddle roller motor malfunction (trailing edge)

Relevant parts	
Upper paddle motor (M21) Paper detection sensor/1 (PS43) Paper detection sensor/2 (PS44)	SD drive board (SDDB) FS control board (FSCB)

Step	Action	WIRING DIAGRAM	
		Control signal	Location (Electrical component)
1	Check the connector between M21-SDDB PJ5 for proper connection and correct as necessary.	—	—
2	Check the connector between PS43-SDDB PJ9 for proper connection and correct as necessary.	—	—
3	Check the connector between PS44-SDDB PJ13 for proper connection and correct as necessary.	—	—
4	Check the connector of M21 for proper drive coupling, and correct as necessary.	—	—
5	PS43 I/O check, sensor check	SDDB PJ9-8 (ON)	SD-509 G-1
6	PS44 I/O check, sensor check	SDDB PJ13-2 (ON)	SD-509 G-3
7	M21 operation check	SDDB PJ5-6 to 10	SD-509 B-3
8	Change M21	—	—
9	Change SDDB	—	—
10	Change FSCB	—	—

19.5.21 C1158: Center-staple paddle roller motor malfunction (leading edge)

Relevant parts	
lower paddle motor (M22) Paper detection sensor/1 (PS43) Paper detection sensor/2 (PS44)	SD drive board (SDDB) FS control board (FSCB)

Step	Action	WIRING DIAGRAM	
		Control signal	Location (Electrical component)
1	Check the motor and sensor connectors for proper connection, and correct as necessary.	—	—
2	Check the connector of M22 for proper drive coupling, and correct as necessary.	—	—
3	PS43 I/O check, sensor check	SDDB PJ9-8 (ON)	SD-509 G-1
4	PS44 I/O check, sensor check	SDDB PJ13-2 (ON)	SD-509 G-3
5	M22 operation check	SDDB PJ5-1~5	SD-509 B-4
6	Change M22	—	—
7	Change SDDB	—	—
8	Change FSCB	—	—

19.5.22 C1181: Malfunctioning of belt up/down movement

Relevant parts	
Conveyance motor/1 (M5) Belt retract solenoid (SD5) Belt position sensor (PS13)	FS control board (FSCB)

Step	Action	WIRING DIAGRAM	
		Control signal	Location (Electrical component)
1	Check the connector between M5-FSCB CN17 for proper connection and correct as necessary.	—	—
2	Check the connector between SD5-FSCB CN19 for proper connection and correct as necessary.	—	—
3	Check the connector between PS13-FSCB CN7 for proper connection and correct as necessary.	—	—
4	Check the connector of M5 for proper drive coupling, and correct as necessary.	—	—
5	PS13 I/O check, sensor check	FSCB CN7-12 (ON)	FS-529 B-5 to 6
6	M5 operation check	FSCB CN17-3 to 6	FS-529 G-6
7	Change M5	—	—
8	SD5 operation check	FSCB CN19-5 (ON)	FS-529 G-4
9	Change SD5	—	—
10	Change FSCB	—	—

19.5.23 C1182: Shift motor drive malfunction

(1) When JS-505 is installed

Relevant parts	
Shift motor (M2) Shift home sensor (PS6)	JS control board (JSCB)

Step	Action	WIRING DIAGRAM	
		Control signal	Location (Electrical component)
1	Check the connector between M2-JSCB PJ4 for proper connection and correct as necessary.	—	—
2	Check the connector between PS6-JSCB PJ7 for proper connection and correct as necessary.	—	—
3	Check the connector of M2 for proper drive coupling, and correct as necessary.	—	—
4	PS6 I/O check, sensor check	JSCB PJ7-18 (ON)	JS-505 F-3
5	M2 operation check	JSCB PJ4-1 to 4	JS-505 F-6
6	Change M2	—	—
7	JSCB F6 conduction check	—	—
8	Change JSCB	—	—

(2) When FS-527 is installed

Relevant parts	
Tray 2 shift motor (M16) Tray 2 shift home sensor (PS25)	FS control board (FSCB)

Step	Action	WIRING DIAGRAM	
		Control signal	Location (Electrical component)
1	Check the connector between M16-FSCB PJ5 for proper connection and correct as necessary.	—	—
2	Check the connector between PS25-FSCB PJ21 for proper connection and correct as necessary.	—	—
3	Check the connector of M16 for proper drive coupling, and correct as necessary.	—	—
4	PS25 I/O check, sensor check	FSCB PJ21-6 (ON)	FS-527 J-3
5	M16 operation check	FSCB PJ5-5 (REM)	FS-527 B to C-9
6	Change M16	—	—
7	Change FSCB	—	—

19.5.24 C1183: Elevate drive malfunction

(1) When FS-527 is installed

Relevant parts	
Elevate motor (M15) Tray 1 lower position sensor (PS21) Tray 1 upper position sensor (PS24) Tray 1 upper position switch (SW2) Tray 1 lower position switch (SW3)	FS control board (FSCB)

Step	Action	WIRING DIAGRAM	
		Control signal	Location (Electrical component)
1	Check the connector between M15-FSCB PJ4 for proper connection and correct as necessary.	—	—
2	Check the connector between PS21-FSCB PJ21 for proper connection and correct as necessary.	—	—
3	Check the connector between PS24-FSCB PJ16 for proper connection and correct as necessary.	—	—
4	Check the connector between SW2-FSCB PJ3 for proper connection and correct as necessary.	—	—
5	Check the connector between SW3-FSCB PJ3 for proper connection and correct as necessary.	—	—
6	Check the connector of M15 for proper drive coupling, and correct as necessary.	—	—
7	PS21 I/O check, sensor check	FSCB PJ21-3 (ON)	FS-527 J-3
8	PS24 I/O check, sensor check	FSCB PJ16-9 (ON)	FS-527 J-4
9	SW2 I/O check, sensor check	FSCB PJ3-2 (ON)	FS-527 B to C-10
10	SW3 I/O check, sensor check	FSCB PJ3-2 (ON)	FS-527 B to C-10
11	M15 operation check	FSCB PJ4-1 to 11	FS-527 B to C-4
12	Change M15	—	—
13	Change FSCB	—	—

(2) When FS-529 is installed

Relevant parts	
Tray up/down motor (M2) Tray lower limit sensor (PS6) Paper surface detect sensor/1 (PS2) Paper surface detect sensor/2 (PS3)	FS control board (FSCB)

Step	Action	WIRING DIAGRAM	
		Control signal	Location (Electrical component)
1	Check the connector between M2-FSCB CN12 for proper connection and correct as necessary.	—	—
2	Check the connector between PS6-FSCB CN5 for proper connection and correct as necessary.	—	—
3	Check the connector between PS2-FSCB CN4 for proper connection and correct as necessary.	—	—
4	Check the connector between PS3-FSCB CN4 for proper connection and correct as necessary.	—	—
5	Check the connector of M2 for proper drive coupling, and correct as necessary.	—	—
6	PS6 I/O check, sensor check	FSCB CN5-9 (ON)	FS-529 B-2
7	PS2 I/O check, sensor check	FSCB CN4-3 (ON)	FS-529 B-3
8	PS3 I/O check, sensor check	FSCB CN4-6 (ON)	FS-529 B-2
9	M2 operation check	FSCB CN12-1 to 2	FS-529 G-2
10	Change M2	—	—
11	Change FSCB	—	—

19.5.25 C1190: Alignment plate motor drive malfunction / Alignment plate R drive malfunction

(1) When FS-527 is installed

Relevant parts	
Alignment plate motor (M13) Alignment plate home sensor (PS17)	FS control board (FSCB)

Step	Action	WIRING DIAGRAM	
		Control signal	Location (Electrical component)
1	Check the connector between M13-FSCB PJ8 for proper connection and correct as necessary.	—	—
2	Check the connector between PS17-FSCB PJ17 for proper connection and correct as necessary.	—	—
3	Check the connector of M13 for proper drive coupling, and correct as necessary.	—	—
4	PS17 I/O check, sensor check	FSCB PJ17-3 (ON)	FS-527 B to C-8
5	M13 operation check	FSCB PJ8-1 to 4	FS-527 B to C-7
6	Change M13	—	—
7	Change FSCB	—	—

(2) When FS-529 is installed

Relevant parts	
Alignment motor/R (M4) Alignment plate home sensor/R (PS9)	FS control board (FSCB)

Step	Action	WIRING DIAGRAM	
		Control signal	Location (Electrical component)
1	Check the connector between M4-FSCB CN14 for proper connection and correct as necessary.	—	—
2	Check the connector between PS9-FSCB CN6 for proper connection and correct as necessary.	—	—
3	Check the connector of M4 for proper drive coupling, and correct as necessary.	—	—
4	PS9 I/O check, sensor check	FSCB CN6-9 (ON)	FS-529 B-1
5	M4 operation check	FSCB CN14-5 to 8	FS-529 G-3
6	Change M4	—	—
7	Change FSCB	—	—

19.5.26 C1191: Alignment plate F drive malfunction

(1) When FS-529 is installed

Relevant parts	
Alignment motor/F (M3) Alignment plate home sensor/F (PS8)	FS control board (FSCB)

Step	Action	WIRING DIAGRAM	
		Control signal	Location (Electrical component)
1	Check the connector between M3-FSCB CN14 for proper connection and correct as necessary.	—	—
2	Check the connector between PS8-FSCB CN6 for proper connection and correct as necessary.	—	—
3	Check the connector of M3 for proper drive coupling, and correct as necessary.	—	—
4	PS8 I/O check, sensor check	FSCB CN6-6 (ON)	FS-529 B-1
5	M3 operation check	FSCB CN14-1 to 4	FS-529 G-2
6	Change M3	—	—
7	Change FSCB	—	—

19.5.27 C1194: Leading edge stopper motor drive malfunction

(1) When FS-527 is installed

Relevant parts	
Leading edge stopper motor (M14) Leading edge stopper home sensor (PS20)	FS control board (FSCB)

Step	Action	WIRING DIAGRAM	
		Control signal	Location (Electrical component)
1	Check the connector between M14-FSCB PJ8 for proper connection and correct as necessary.	—	—
2	Check the connector between PS20-FSCB PJ17 for proper connection and correct as necessary.	—	—
3	Check the connector of M14 for proper drive coupling, and correct as necessary.	—	—
4	PS20 I/O check, sensor check	FSCB PJ17-6 (ON)	FS-527 B to C-8
5	M14 operation check	FSCB PJ8-9 to 12	FS-527 B to C-6
6	Change M14	—	—
7	Change FSCB	—	—

(2) When FS-529 is installed

Relevant parts	
Stapler motor (M8) Leading edge stopper home sensor (PS14)	FS control board (FSCB)

Step	Action	WIRING DIAGRAM	
		Control signal	Location (Electrical component)
1	Check the connector between M8-FSCB CN20 for proper connection and correct as necessary.	—	—
2	Check the connector between PS14-FSCB CN8 for proper connection and correct as necessary.	—	—
3	Check the connector of M8 for proper drive coupling, and correct as necessary.	—	—
4	PS14 I/O check, sensor check	FSCB CN8-3 (ON)	FS-529 B-6
5	M8 operation check	—	—
6	Change stapler unit	—	—
7	Change FSCB	—	—

19.5.28 C11A1: Tray 2 exit roller pressure/ retraction malfunction / Exit roller pressure/ retraction malfunction

(1) When FS-527 is installed

Relevant parts	
Exit roller retraction motor (M9) Exit roller pressure sensor (PS12)	FS control board (FSCB)

Step	Action	WIRING DIAGRAM	
		Control signal	Location (Electrical component)
1	Check the connector between M9-FSCB PJ9 for proper connection and correct as necessary.	—	—
2	Check the connector between PS12-FSCB PJ16 for proper connection and correct as necessary.	—	—
3	Check the connector of M9 for proper drive coupling, and correct as necessary.	—	—
4	PS12 I/O check, sensor check	FSCB PJ16-12 (ON)	FS-527 J-4
5	M9 operation check	FSCB PJ9-5 (REM)	FS-527 J-1
6	Change M9	—	—
7	Change FSCB	—	—

(2) When FS-529 is installed

Relevant parts	
Pick up roller position motor (M1) Pick up roller position sensor (PS12)	FS control board (FSCB)

Step	Action	WIRING DIAGRAM	
		Control signal	Location (Electrical component)
1	Check the connector between M9-FSCB CN11 for proper connection and correct as necessary.	—	—
2	Check the connector between PS12-FSCB CN7 for proper connection and correct as necessary.	—	—
3	Check the connector of M1 for proper drive coupling, and correct as necessary.	—	—
4	PS12 I/O check, sensor check	FSCB CN7-9 (ON)	FS-529 B-5
5	M1 operation check	FSCB CN11-3 to 6	FS-529 G-1
6	Change M1	—	—
7	Change FSCB	—	—

19.5.29 C11A2: Accommodation roller pressure/ retraction malfunction

Relevant parts	
Accommodation roller retraction motor (M10) Accommodation roller pressure sensor (PS13)	FS control board (FSCB)

Step	Action	WIRING DIAGRAM	
		Control signal	Location (Electrical component)
1	Check the connector between M10-FSCB PJ9 for proper connection and correct as necessary.	—	—
2	Check the connector between PS13-FSCB PJ16 for proper connection and correct as necessary.	—	—
3	Check the connector of M10 for proper drive coupling, and correct as necessary.	—	—
4	PS13 I/O check, sensor check	FSCB PJ16-15 (ON)	FS-527 J-3
5	M10 operation check	FSCB PJ9-8 (REM)	FS-527 J-1
6	Change M10	—	—
7	Change FSCB	—	—

19.5.30 C11A7: Tray 3 exit roller pressure/ retraction malfunction

Relevant parts	
Tray 3 exit roller retraction motor (M17) Tray 3 exit roller retraction sensor (PS35)	FS control board (FSCB)

Step	Action	WIRING DIAGRAM	
		Control signal	Location (Electrical component)
1	Check the connector between M17-FSCB PJ30 for proper connection and correct as necessary.	—	—
2	Check the connector between PS35-FSCB PJ12 for proper connection and correct as necessary.	—	—
3	Check the connector of M17 for proper drive coupling, and correct as necessary.	—	—
4	PS35 I/O check, sensor check	FSCB PJ12-6 (ON)	FS-527 (JS-603) L-10
5	M17 operation check	FSCB PJ30-2 (REM)	FS-527 (JS-603) L-9
6	Change M17	—	—
7	Change FSCB	—	—

19.5.31 C11B0: Stapler movement drive malfunction

(1) When FS-527 is installed

Relevant parts	
Stapler home sensor/1 (PS18) Stapler home sensor/2 (PS19)	FS control board (FSCB) Stapler movement motor (M11)

Step	Action	WIRING DIAGRAM	
		Control signal	Location (Electrical component)
1	Check the connector between M1-FSCB PJ8 for proper connection and correct as necessary.	—	—
2	Check the connector between PS18-FSCB PJ17 for proper connection and correct as necessary.	—	—
3	Check the connector between PS19-FSCB PJ17 for proper connection and correct as necessary.	—	—
4	Check the connector of M11 for proper drive coupling, and correct as necessary.	—	—
5	PS18 I/O check, sensor check	FSCB PJ17-12 (ON)	FS-527 B to C-7
6	PS19 I/O check, sensor check	FSCB PJ17-15 (ON)	FS-527 B to C-7
7	M11 operation check	FSCB PJ8-5 to 8	FS-527 B to C-6
8	Change M11	—	—
9	Change FSCB	—	—

(2) When FS-529 is installed

Relevant parts	
Stapler movement motor (M7) Stapler home sensor (PS11)	FS control board (FSCB)

Step	Action	WIRING DIAGRAM	
		Control signal	Location (Electrical component)
1	Check the connector between M7-FSCB CN18 for proper connection and correct as necessary.	—	—
2	Check the connector between PS11-FSCB CN7 for proper connection and correct as necessary.	—	—
3	Check the connector of M7 for proper drive coupling, and correct as necessary.	—	—
4	PS11 I/O check, sensor check	FSCB CN7-6 (ON)	FS-529 B-5
5	M7 operation check	FSCB CN18-1 to 4	FS-529 G-5
6	Change M7	—	—
7	Change FSCB	—	—

19.5.32 C11B2: Staple drive malfunction

Relevant parts	
Stapler unit	FS control board (FSCB)

Step	Action	WIRING DIAGRAM	
		Control signal	Location (Electrical component)
1	Check the motor and sensor connectors for proper connection, and correct as necessary.	—	—
2	Change stapler unit	—	—
3	Change FSCB	—	—

19.5.33 C11B5: Saddle stapler drive malfunction

Relevant parts	
Saddle stapler unit	SD drive board (SDDB) FS control board (FSCB)

Step	Action	WIRING DIAGRAM	
		Control signal	Location (Electrical component)
1	Check the motor and sensor connectors for proper connection, and correct as necessary.	—	—
2	Change saddle stapler unit	—	—
3	Change SDDB	—	—
4	Change FSCB	—	—

19.5.34 C11C0: Punch motor drive malfunction

Relevant parts	
Punch motor/1 (M100) Punch home sensor/1 (PS100)	FS control board (FSCB)

Step	Action	WIRING DIAGRAM	
		Control signal	Location (Electrical component)
1	Check the connector between M100-FSCB PJ19 for proper connection and correct as necessary.	—	—
2	Check the connector between PS100-FSCB PJ19 for proper connection and correct as necessary.	—	—
3	Check the connector of M100 for proper drive coupling, and correct as necessary.	—	—
4	PS100 I/O check, sensor check	FSCB PJ19-8 (ON)	FS-527 (PK-517) J-9
5	M100 operation check	FSCB PJ19-1 (CW) FSCB PJ19-3 (CCW)	FS-527 (PK-517) J-8
6	Change M100	—	—
7	Change FSCB	—	—

19.5.35 C11E0: Duplex path switching motor drive malfunction / Finisher route change malfunction

(1) When FS-527 is installed

Relevant parts	
Duplex path switching motor (M2) Duplex path switching sensor (PS3)	FS control board (FSCB)

Step	Action	WIRING DIAGRAM	
		Control signal	Location (Electrical component)
1	Check the connector between M2-FSCB PJ29 for proper connection and correct as necessary.	—	—
2	Check the connector between PS3-FSCB PJ11 for proper connection and correct as necessary.	—	—
3	Check the connector of M2 for proper drive coupling, and correct as necessary.	—	—
4	PS3 I/O check, sensor check	FSCB PJ11-6 (ON)	FS-527 I-11
5	M2 operation check	FSCB PJ29-1 to 3	FS-527 I-12
6	Change M2	—	—
7	Change FSCB	—	—

(2) When JS-505 is installed

Relevant parts	
Route change motor (M3) Route change home sensor (PS4)	JS control board (JSCB)

Step	Action	WIRING DIAGRAM	
		Control signal	Location (Electrical component)
1	Check the connector between M3-JSCB PJ6 for proper connection and correct as necessary.	—	—
2	Check the connector between PS4-JSCB PJ7 for proper connection and correct as necessary.	—	—
3	Check the connector of M3 for proper drive coupling, and correct as necessary.	—	—
4	PS4 I/O check, sensor check	JSCB PJ7-15 (ON)	JS-505 F-4
5	M3 operation check	JSCB PJ6-1 to 2	JS-505 F-6
6	Change M3	—	—
7	Change FSCB	—	—

19.5.36 C11E1: Upper lower path switching motor drive malfunction

Relevant parts	
Upper lower path switching motor (M6) Upper lower path switching sensor (PS26)	FS control board (FSCB)

Step	Action	WIRING DIAGRAM	
		Control signal	Location (Electrical component)
1	Check the connector between M6-FSCB PJ9 for proper connection and correct as necessary.	—	—
2	Check the connector between PS26-FSCB PJ21 for proper connection and correct as necessary.	—	—
3	Check the connector of M6 for proper drive coupling, and correct as necessary.	—	—
4	PS26 I/O check, sensor check	FSCB PJ21-9 (ON)	FS-527 J-2
5	M6 operation check	FSCB PJ9-1 (REM)	FS-527 J-2
6	Change M6	—	—
7	Change FSCB	—	—

19.5.37 C11E2: Tray 1 path switching motor drive malfunction

Relevant parts	
Tray 1 path switching motor (M8) Tray 1 path switching home sensor (PS7)	FS control board (FSCB)

Step	Action	WIRING DIAGRAM	
		Control signal	Location (Electrical component)
1	Check the connector between M8-FSCB PJ9 for proper connection and correct as necessary.	—	—
2	Check the connector between PS7-FSCB PJ16 for proper connection and correct as necessary.	—	—
3	Check the connector of M8 for proper drive coupling, and correct as necessary.	—	—
4	PS7 I/O check, sensor check	FSCB PJ16-3 (ON)	FS-527 J-5
5	M8 operation check	FSCB PJ9-4 (REM)	FS-527 J-2
6	Change M8	—	—
7	Change FSCB	—	—

19.5.38 C1301: Fan motor drive malfunction

Relevant parts	
Fan motor (FM1)	FS control board (FSCB)

Step	Action	WIRING DIAGRAM	
		Control signal	Location (Electrical component)
1	Check the connector between FM1-FSCB CN19 for proper connection and correct as necessary.	—	—
2	Check the connector of FM1 for proper drive coupling, and correct as necessary.	—	—
3	FM1 operation check	FSCB CN19-2 (LOCK)	FS-529 G-4
4	Change FM1	—	—
5	Change FSCB	—	—

19.5.39 C1402: FS NVRAM memory error

Relevant parts	
FS control board (FSCB)	

Step	Action	WIRING DIAGRAM	
		Control signal	Location (Electrical component)
1	Disconnect and then connect the power cord. Turn OFF the main power switch, wait for 10 sec. or more, and turn ON the main power switch.	—	—
2	Rewrite the firmware.	—	—
3	Change FSCB	—	—

19.5.40 C2201: Toner bottle motor's turning at abnormal timing

Relevant parts	
Toner bottle motor (M3) Toner bottle home sensor (PS4)	Printer control board (PRCB)

Step	Action	WIRING DIAGRAM	
		Control signal	Location (Electrical component)
1	Check the connector between M3-PRCB CN8 for proper connection and correct as necessary.	—	—
2	Check the connector between PS4-PRCB CN15 for proper connection and correct as necessary.	—	—
3	Check the M3 connector for proper drive coupling and correct as necessary.	—	—
4	PS4 I/O check, sensor check	FSCB CN15-10 (ON)	C-24
5	M3 operation check	PRCB CN8-5 to 6	C-7
6	Change M3	—	—
7	Change PRCB	—	—

19.5.41 C2253: PC motor's failure to turn

19.5.42 C2254: PC motor's turning at abnormal timing

Relevant parts	
PC motor (M2)	Printer control board (PRCB)

Step	Action	WIRING DIAGRAM	
		Control signal	Location (Electrical component)
1	Check the connector between M2-PRCB CN4 for proper connection and correct as necessary.	—	—
2	Check the M2 connector for proper drive coupling and correct as necessary.	—	—
3	M2 operation check	PRCB CN4-4 (REM) PRCB CN4-7 (LOCK)	C-15
4	Change M2	—	—
5	Change PRCB	—	—

19.5.43 C2350: Toner suction fan motor's turning at abnormal timing

Relevant parts	
Toner suction fan motor (FM4)	Printer control board (PRCB)

Step	Action	WIRING DIAGRAM	
		Control signal	Location (Electrical component)
1	Check the connector between FM4-relay CN43-PRCB CN6 for proper connection and correct as necessary.	—	—
2	Check the fan for possible overload and correct as necessary.	—	—
3	FM4 operation check	PRCB CN6-14 (REM) PRCB CN6-15 (LOCK)	C-9
4	Change FM4	—	—
5	Change PRCB	—	—

19.5.44 C2557: Abnormally low toner density detected TCR sensor

19.5.45 C2558: Abnormally high toner density detected TCR sensor

Relevant parts	
Developing unit Toner bottle Toner near empty switch (RS1)	Toner bottle motor (M3) Toner supply motor (M4) TCR sensor board (TCRSB) Printer control board (PRCB)

Step	Action	WIRING DIAGRAM	
		Control signal	Location (Electrical component)
1	Make sure that the following counter is cleared at the developer replacing. [Service Mode] → [Counter] → [Life] → [Developer Use Time]	—	—
2	Perform image troubleshooting procedure if image density is low.	—	—
3	Reinstall developing unit	—	—
4	Reinstall toner bottle	—	—
5	Check the contact of developing unit for proper connection and correct as necessary.	—	—
6	Check the connector between TCRSB CN29-relay CN28-PRCB CN24 for proper connection and correct as necessary.	—	—
7	Check the connector between M3-PRCB CN8 for proper connection and correct as necessary.	—	—
8	Check the connector between M4-relay CN13-PRCB CN8 for proper connection and correct as necessary.	—	—
9	M3 operation check	PRCB CN8-5 to 6	C-7
10	M4 operation check	PRCB CN8-1 to 4	C-7
11	Change developing unit	—	—
12	Change TCRSB	—	—
13	Change PRCB	—	—

19.5.46 C255C: TCR sensor adjustment failure

19.5.47 C2564: TCR sensor failure

Relevant parts	
Developing unit Toner bottle Toner near empty switch (RS1)	Toner bottle motor (M3) Toner supply motor (M4) TCR sensor board (TCRSB) Printer control board (PRCB)

Step	Action	WIRING DIAGRAM	
		Control signal	Location (Electrical component)
1	Reinstall developing unit	—	—
3	Reinstall toner bottle	—	—
4	Check the contact of developing unit for proper connection and correct as necessary.	—	—
5	Check the connector between TCRSB CN29-relay CN28-PRCB CN24 for proper connection and correct as necessary.	—	—
6	Check the connector between M3-PRCB CN8 for proper connection and correct as necessary.	—	—
7	Check the connector between M4-relay CN13-PRCB CN8 for proper connection and correct as necessary.	—	—
8	M3 operation check	PRCB CN8-5 to 6	C-7
9	M4 operation check	PRCB CN8-1 to 4	C-7
10	Change developing unit	—	—
11	Change TCRSB	—	—
12	Change PRCB	—	—

19.5.48 C2650: Main backup media access error

Relevant parts	
EEPROM (IC51 on the printer control board)	Printer control board (PRCB)

Step	Action	WIRING DIAGRAM	
		Control signal	Location (Electrical component)
1	Reboot the machine.	—	—
2	Check the EEPROM on the PRCB for proper connection and correct as necessary.	—	—
3	Change PRCB	—	—
4	Change EEPROM	—	—

19.5.49 C3421: Fusing heaters trouble (center)

19.5.50 C3423: Fusing heaters trouble (edge)

Relevant parts	
Fusing unit	DC power supply (DCPU) Printer control board (PRCB)

Step	Action	WIRING DIAGRAM	
		Control signal	Location (Electrical component)
1	Check the fusing unit for correct installation (whether it is secured in position).	—	—
2	Check the open/close operation of the right door.	—	—
3	Check the fusing unit CN30-PRCB CN16, fusing unit-relay CN4AC-DCPU CN2 for proper connection and correct or change as necessary.	—	—
4	Change fusing unit	—	—
6	Change PRCB	—	—
7	Change DCPU	—	—

19.5.51 C3721: Fusing abnormally high temperature detection (center)

19.5.52 C3723: Fusing abnormally high temperature detection (edge)

Relevant parts	
Fusing unit	DC power supply (DCPU) Printer control board (PRCB)

Step	Action	WIRING DIAGRAM	
		Control signal	Location (Electrical component)
1	Check the fusing unit for correct installation (whether it is secured in position).	—	—
2	Check the open/close operation of the right door.	—	—
3	Check the fusing unit CN30-PRCB CN16, fusing unit-relay CN4AC-DCPU CN2 for proper connection and correct or change as necessary.	—	—
4	Change fusing unit	—	—
5	Change PRCB	—	—
6	Change DCPU	—	—

19.5.53 C3821: Fusing abnormally low temperature detection (center)

19.5.54 C3823: Fusing abnormally low temperature detection (edge)

Relevant parts	
Fusing unit	DC power supply (DCPU) Printer control board (PRCB)

Step	Action	WIRING DIAGRAM	
		Control signal	Location (Electrical component)
1	Check the fusing unit for correct installation (whether it is secured in position).	—	—
2	Check the open/close operation of the right door.	—	—
3	Check the fusing unit CN30-PRCB CN16, fusing unit-relay CN4AC-DCPU CN2 for proper connection and correct or change as necessary.	—	—
4	Change fusing unit	—	—
5	Change PRCB	—	—
6	Change DCPU	—	—

19.5.55 C4101: Polygon motor rotation trouble

Relevant parts	
PH unit	Printer control board (PRCB)

Step	Action	WIRING DIAGRAM	
		Control signal	Location (Electrical component)
1	Check the connector between PH unit-PRCB CN19, CN20 for proper connection and correct as necessary.	—	—
2	Change PH unit	—	—
3	Change PRCB	—	—

19.5.56 C4501: Laser malfunction

Relevant parts	
PH unit	Printer control board (PRCB)

Step	Action	WIRING DIAGRAM	
		Control signal	Location (Electrical component)
1	Check the connector between PH unit-PRCB CN19, CN20 for proper connection and correct as necessary.	—	—
2	Change PH unit	—	—
3	Change PRCB	—	—

19.5.57 C5102: Transport motor's failure to turn

19.5.58 C5103: Transport motor's turning at abnormal timing

Relevant parts	
Transport motor (M1)	Printer control board (PRCB)

Step	Action	WIRING DIAGRAM	
		Control signal	Location (Electrical component)
1	Check the connector between M1-PRCB CN3 for proper connection and correct as necessary.	—	—
2	Check M1 for proper drive coupling and correct as necessary.	—	—
3	M1 operation check	PRCB CN3-4 (REM) PRCB CN3-7 (LOCK)	C-16
4	Change M1	—	—
5	Change PRCB	—	—

19.5.59 C5351: Power supply cooling fan motor/1's failure to turn

Relevant parts	
Power supply cooling fan motor (FM1)	Printer control board (PRCB)

Step	Action	WIRING DIAGRAM	
		Control signal	Location (Electrical component)
1	Check the connector between FM1-relay CN95-PRCB CN3 for proper connection and correct as necessary.	—	—
2	Check the fan for possible overload and correct as necessary.	—	—
3	FM1 operation check	PRCB CN8-8 (REM) PRCB CN8-9 (LOCK)	C-7
4	Change FM1	—	—
5	Change PRCB	—	—

19.5.60 C5356: Cooling fan motor's failure to turn

Relevant parts	
Cooling fan motor (FM2)	Printer control board (PRCB)

Step	Action	WIRING DIAGRAM	
		Control signal	Location (Electrical component)
1	Check the connector between FM2-relay CN44-PRCB CN5 for proper connection and correct as necessary.	—	—
2	Check the fan for possible overload and correct as necessary.	—	—
3	FM2 operation check	PRCB CN5-2 (REM) PRCB CN5-3 (LOCK)	C-22 to 23
4	Change FM2	—	—
5	PRCB ICP6 conduction check	—	—
6	Change PRCB	—	—

19.5.61 C5370: MFP control board cooling fan motor's failure to turn

Relevant parts	
MFP board cooling fan motor (FM5)	MFP board (MFPB)

Step	Action	WIRING DIAGRAM	
		Control signal	Location (Electrical component)
1	Check the connector between FM5-relay CN61-MFPB PJ26 for proper connection and correct as necessary.	—	—
2	Check the fan for possible overload and correct as necessary.	—	—
3	FM5 operation check	MFPB PJ26-3 (LOCK)	X-17
4	Change FM5	—	—
5	Change MFPB	—	—

19.5.62 C5501: AC signal abnormality

Relevant parts	
Fusing unit	DC power supply (DCPU) Printer control board (PRCB)

Step	Action	WIRING DIAGRAM	
		Control signal	Location (Electrical component)
1	Check the fusing unit for correct installation (whether it is secured in position).	—	—
2	Check the fusing unit CN30-PRCB CN16, fusing unit-relay CN4AC-DCPU CN2 for proper connection and correct or change as necessary.	—	—
3	Change fusing unit	—	—
4	Change PRCB	—	—
5	Change DCPU	—	—

19.5.63 C5601: Engine control malfunction

Relevant parts	
Printer control board (PRCB)	

Step	Action	WIRING DIAGRAM	
		Control signal	Location (Electrical component)
1	Check the connectors on the PRCB for proper connection and correct or change as necessary.	—	—
2	Rewrite the firmware.	—	—
3	Change PRCB	—	—

19.5.64 C5602: FPGA configuration error

Relevant parts	
Printer control board (PRCB)	

Step	Action	WIRING DIAGRAM	
		Control signal	Location (Electrical component)
1	Reboot the machine.	—	—
2	Rewrite the firmware.	—	—
3	Change PRCB	—	—

19.5.65 C6102: Drive system home sensor malfunction

19.5.66 C6103: Slider over running

Relevant parts	
Scanner home sensor (PS201) Scanner motor (M201)	Scanner relay board (REYB/SCAN) MFP board (MFPB)

Step	Action	WIRING DIAGRAM	
		Control signal	Location (Electrical component)
1	Correct or change the scanner drive (cable, pulley, gear, belt) if it is faulty.	—	—
2	Correct the scanner motor set screw if loose.	—	—
3	Adjust [Image Position Leading Edge] and [Feed Direction Adjustment].	—	—
4	Check the connector between M201-REYB/SCAN PJ5 for proper connection and correct as necessary.	—	—
5	Check the connector between PS201-REYB/SCAN PJ8 for proper connection and correct as necessary.	—	—
6	Check the connector between REYB/SCAN PJ2-MFPB PJ14 for proper connection and correct as necessary.	—	—
7	PS201 I/O check, sensor check	REYB/SCAN PJ8-3 (ON)	S-12
8	M201 operation check	REYB/SCAN PJ5-1 to 4	S-9
9	Change REYB/SCAN.	—	—
10	Change MFPB.	—	—

19.5.67 C6704: Image input time out

Relevant parts	
MFP board (MFPB)	CCD board (CCDB)

Step	Action	WIRING DIAGRAM	
		Control signal	Location (Electrical component)
1	Select [Service Mode] → [State Confirmation] → [Memory/HDD Adj.] → [Memory Bus Check] → [Scanner→Memory], and conduct the memory bus function.	—	—
2	Check the connectors between scanner section and MFPB for proper connection and correct as necessary.	—	—
3	Change MFPB	—	—
4	Change CCDB	—	—

19.5.68 C6751: CCD clamp/gain adjustment failure

Relevant parts	
Exposure unit	CCD board (CCDB) MFP board (MFPB)

Step	Action	WIRING DIAGRAM	
		Control signal	Location (Electrical component)
1	Check the connector between CCDB PJ2-MFPB PJ01 for proper connection and correct as necessary.	—	—
2	Check for possible extraneous light and correct as necessary.	—	—
3	Clean the lens, mirrors, CCD surface, and shading sheet if dirty	—	—
4	Correct reflective mirror of the scanner if faulty, or change scanner.	—	—
5	Change CCDB	—	—
6	Change MFPB	—	—

19.5.69 C6752: ASIC clock input error

Relevant parts	
Exposure unit CCD board (CCDB)	Printer control board (PRCB) MFP board (MFPB)

Step	Action	WIRING DIAGRAM	
		Control signal	Location (Electrical component)
1	Correct the harness connection of CCDB if faulty.	—	—
2	Change CCDB	—	—
3	Change PRCB	—	—
4	Change MFPB	—	—

19.5.70 C6901: DSC board mount failure 1

19.5.71 C6902: DSC board bus check NG1-1

19.5.72 C6903: DSC board bus check NG1-2

Relevant parts	
DSC board (SC-507)	MFP board (MFPB)

Step	Action	WIRING DIAGRAM	
		Control signal	Location (Electrical component)
1	Correct the harness connection of DSC board if faulty.	—	—
2	Change DSC board	—	—
3	Change MFPB	—	—

19.5.73 C6F01: Scanner sequence trouble 1

Relevant parts	
MFP board (MFPB)	DF control board (DFCB) Scanner relay board (REYB/SCAN)

Step	Action	WIRING DIAGRAM	
		Control signal	Location (Electrical component)
1	Correct the harness connection between main body and ADF if faulty.	—	—
2	Change REYB/SCAN	—	—
3	Change DFCB	—	—
4	Change MFPB	—	—

19.5.74 C8101: Before reading pressure welding alienation mechanism trouble

Relevant parts	
Reading roller release motor (M3) Reading roller release position sensor (PS12)	DF control board (DFCB)

Step	Action	WIRING DIAGRAM	
		Control signal	Location (Electrical component)
1	Check the connector between M3-relay CN5-DFCB J15 for proper connection and correct as necessary.	—	—
2	Check the connector between PS12-DFCB J15 for proper connection and correct as necessary.	—	—
3	Check the connector of M3 for proper drive coupling, and correct as necessary.	—	—
4	PS12 I/O check, sensor check	DFCB J15-3 (ON)	DF-621 G-1
5	M3 operation check	DFCB J15-4 to 5	DF-621 G-2
6	Change M3	—	—
7	DFCB F8 conduction check	—	—
8	Change FSCB	—	—

19.5.75 C8107: Glass cleaning mechanism trouble

Relevant parts	
Glass cleaning motor (M4) Glass cleaning roller home sensor (PS13)	DF control board (DFCB)

Step	Action	WIRING DIAGRAM	
		Control signal	Location (Electrical component)
1	Check the connector between M4-DFCB J1 for proper connection and correct as necessary.	—	—
2	Check the connector between PS13-DFCB J8 for proper connection and correct as necessary.	—	—
3	Check the connector of M4 for proper drive coupling, and correct as necessary.	—	—
4	PS13 I/O check, sensor check	DFCB J8-3 (ON)	DF-621 G-2
5	M4 operation check	DFCB J1-1 to 4	DF-621 B-2
6	Change M4	—	—
7	DFCB F1 conduction check	—	—
8	Change DFCB	—	—

19.5.76 C8302: Cooling fan trouble

Relevant parts	
DF cooling fan motor (FM1)	DF control board (DFCB)

Step	Action	WIRING DIAGRAM	
		Control signal	Location (Electrical component)
1	Check the connector between FM1-DFCB J13 for proper connection and correct as necessary.	—	—
2	Check the fan for possible overload and correct as necessary.	—	—
3	FM1 operation check	DFCB J13-1 (ON) DFCB J13-3 (LOCK)	DF-621 B-3
4	Change FM1	—	—
5	DFCB F7 conduction check	—	—
6	Change DFCB	—	—

19.5.77 C9401: Exposure turning on the lamp trouble detection

19.5.78 C9402: Exposure turning on the lamp abnormally detection

Relevant parts	
Exposure unit Flat cable	Inverter board (INVB) CCD board (CCDB) Scanner relay board (REYB/SCAN) MFP board (MFPB)

Step	Action	WIRING DIAGRAM	
		Control signal	Location (Electrical component)
1	Check the connection between the lamp harness and the inverter board, and correct if necessary.	—	—
2	Check the connector between INVB CN1-REYB/SCAN PJ7 for proper connection and correct as necessary.	—	—
3	Check the connector between REYB/SCAN PJ2-MFPB PJ14 for proper connection and correct as necessary.	—	—
4	Check the connector between CCDB PJ2-MFPB PJ01 for proper connection and correct as necessary.	—	—
5	Change INVB	—	—
6	Change exposure unit	—	—
7	Change CCDB	—	—
8	Change REYB/SCAN	—	—

19.5.79 CA051: Standard controller configuration failure

19.5.80 CA052: Controller hardware error

19.5.81 CA053: Controller start failure

Relevant parts	
MFP board (MFPB)	

Step	Action	WIRING DIAGRAM	
		Control signal	Location (Electrical component)
1	Check to see if the following setting has been correctly made: [Service Mode] → [System 2] → [Image Controller Setting]. If changing the setting, turn OFF the main power switch and turn it ON again after 10 seconds or more.	—	—
2	Check the connectors of the MFP board (MFPB) for proper connection and correct as necessary.	—	—
3	Change MFPB	—	—

19.5.82 CC001: Vendor connection failure

Relevant parts	
Printer control board (PRCB)	Coin vendor (Japan) Coin vendor kit (North America, Europe)

Step	Action	WIRING DIAGRAM	
		Control signal	Location (Electrical component)
1	Check the connector between vendor-PRCB CN17 for proper connection and correct as necessary.	—	—
2	Change PRCB	—	—
3	Change vendor	—	—

19.5.83 CC151: ROM contents error upon startup (MSC)

19.5.84 CC152: ROM contents error upon startup (Scanner)

19.5.85 CC153: ROM contents error upon startup (PRT)

Step	Action	WIRING DIAGRAM	
		Control signal	Location (Electrical component)
1	Check the ROM version.	—	—
2	Rewrite the firmware.	—	—
3	Replace the appropriate board. MSC: MFP board (MFPB) IR: MFP board (MFPB) PRT: Printer control board (PRCB)	—	—

19.5.86 CC155: Finisher ROM error

Relevant parts	
FS control board (FSCB)	

Step	Action	WIRING DIAGRAM	
		Control signal	Location (Electrical component)
1	Disconnect and then connect the power cord. Turn OFF the main power switch, wait for 10 sec. or more, and turn ON the main power switch.	—	—
2	Rewrite firmware.	—	—
3	Change FSCB	—	—

19.5.87 CC156: ADF ROM error

Relevant parts	
DF control board (DFCB)	

Step	Action	WIRING DIAGRAM	
		Control signal	Location (Electrical component)
1	Disconnect and then connect the power cord. Turn OFF the main power switch, wait for 10 sec. or more, and turn ON the main power switch.	—	—
2	Rewrite the firmware.	—	—
3	Change DFCB	—	—

19.5.88 CC159: ROM contents error upon startup (DSC1)

19.5.89 CC15A: ROM contents error upon startup (DSC2)

Relevant parts	
DSC board (SC-507)	

Step	Action	WIRING DIAGRAM	
		Control signal	Location (Electrical component)
1	Check the DSC board connector for proper connection and correct as necessary.	—	—
2	Disconnect and then connect the power cord. Turn OFF the main power switch, wait for 10 sec. or more, and turn ON the main power switch.	—	—
3	Rewrite the firmware.	—	—
4	Change DSC board	—	—

19.5.90 CC163: ROM contents error (PRT)

Relevant parts	
Printer control board (PRCB)	

Step	Action	WIRING DIAGRAM	
		Control signal	Location (Electrical component)
1	Unplug and plug the power cord from/into the outlet, turn the main power switch OFF, wait 10 seconds or more, and turn it ON.	—	—
2	Rewrite the firmware.	—	—
3	Change PRCB	—	—

19.5.91 CC164: ROM contents error (MSC)

Relevant parts	
MFP board (MFPB)	

Step	Action	WIRING DIAGRAM	
		Control signal	Location (Electrical component)
1	Check the ROM version.	—	—
2	Rewrite the firmware.	—	—
3	Change MFPB	—	—
4	When not reviving even if the above-mentioned procedure is done, contact the responsible people of KMBT.	—	—

19.5.92 CC165: ROM contents error (ADF)

Relevant parts	
DF control board (DFCB)	

Step	Action	WIRING DIAGRAM	
		Control signal	Location (Electrical component)
1	Disconnect and then connect the power cord. Turn OFF the main power switch, wait for 10 sec. or more, and turn ON the main power switch.	—	—
2	Rewrite the firmware.	—	—
3	Change DFCB	—	—

19.5.93 CC170: Dynamic link error during starting (AP0)

19.5.94 CC171: Dynamic link error during starting (AP1)

19.5.95 CC172: Dynamic link error during starting (AP2)

19.5.96 CC173: Dynamic link error during starting (AP3)

19.5.97 CC174: Dynamic link error during starting (AP4)

19.5.98 CC180: Dynamic link error during starting (LDR)

19.5.99 CC181: Dynamic link error during starting (IBR)

19.5.100 CC182: Dynamic link error during starting (IID)

19.5.101 CC183: Dynamic link error during starting (IPF)

19.5.102 CC184: Dynamic link error during starting (IMY)

19.5.103 CC185: Dynamic link error during starting (SPF)

19.5.104 CC186: Dynamic link error during starting (OAP)

Relevant parts	
MFP board (MFPB)	NVRAM board (NRB)

Step	Action	WIRING DIAGRAM	
		Control signal	Location (Electrical component)
1	If the malfunction code “C-C172” has occurred, access [Service Mode] → [System 2] → [Image Controller Setting] and check to see if “Controller 1,” “Controller 2,” “Controller 3,” or “Others” is set for [Image Controller Setting]. If any of these is set, select “Controller 0”.	—	—
2	Change MFPB.	—	—
3	When not reviving even if the above-mentioned procedure is done, contact the responsible people of KMBT.	—	—

19.5.105 CC190: Outline font load error

Relevant parts	
MFP board (MFPB)	Hard disk

Step	Action	WIRING DIAGRAM	
		Control signal	Location (Electrical component)
1	Check the connector between hard disk-MFPB PJ11 for proper connection and correct as necessary.	—	—
2	Format hard disk.	—	—
3	Change hard disk	—	—
4	Change MFPB.	—	—

19.5.106 CC191: Setting parameter load error

Relevant parts	
MFP board (MFPB)	

Step	Action	WIRING DIAGRAM	
		Control signal	Location (Electrical component)
1	Turn OFF the main power switch, wait for 10 sec. or more, and turn ON the main power switch.	—	—
2	Reinstall the loadable device driver.	—	—
3	Rewrite the firmware.	—	—
4	Change MFPB.	—	—

19.5.107 CC211: Authentication device general error

Relevant parts	
MFP board (MFPB)	Authentication device

Step	Action	WIRING DIAGRAM	
		Control signal	Location (Electrical component)
1	Check the USB cable for proper connection and correct as necessary.	—	—
2	Turn OFF the main power switch, wait for 10 sec. or more, and turn ON the main power switch.	—	—

19.5.108 CC212: User validation error

Relevant parts	
MFP board (MFPB)	Authentication device

Step	Action	WIRING DIAGRAM	
		Control signal	Location (Electrical component)
1	Check the USB cable for proper connection and correct as necessary.	—	—
2	Turn OFF the main power switch, wait for 10 sec. or more, and turn ON the main power switch.	—	—
3	Re-register the user authentication information.	—	—
4	Change authentication device.	—	—

19.5.109 CC213: User registration error/card information setting error

Relevant parts	
MFP board (MFPB)	Authentication device

Step	Action	WIRING DIAGRAM	
		Control signal	Location (Electrical component)
1	Check the USB cable for proper connection and correct as necessary.	—	—
2	Turn OFF the main power switch, wait for 10 sec. or more, and turn ON the main power switch.	—	—
3	Reset the authentication settings. (card type, IC card advanced settings, and etc.)	—	—
4	Re-register the user authentication information.	—	—

19.5.110 CC214: User information deletion error

Relevant parts	
MFP board (MFPB)	Authentication device

Step	Action	WIRING DIAGRAM	
		Control signal	Location (Electrical component)
1	Check the USB cable for proper connection and correct as necessary.	—	—
2	Turn OFF the main power switch, wait for 10 sec. or more, and turn ON the main power switch.	—	—

19.5.111 CC216: Acquisition failure of the number of trials/Initialize error of number of authentication

Relevant parts	
MFP board (MFPB)	Authentication device

Step	Action	WIRING DIAGRAM	
		Control signal	Location (Electrical component)
1	Check the USB cable for proper connection and correct as necessary.	—	—
2	Turn OFF the main power switch, wait for 10 sec. or more, and turn ON the main power switch.	—	—
3	Reset the number of authentication trials.	—	—

19.5.112 CD002: JOB RAM save error

Relevant parts	
MFP board (MFPB)	Hard disk

Step	Action	WIRING DIAGRAM	
		Control signal	Location (Electrical component)
1	Check the connector between hard disk-MFPB PJ11 for proper connection and correct as necessary.	—	—
2	Format hard disk.	—	—
3	Change hard disk.	—	—
4	Change MFPB.	—	—

19.5.113 CD004: Hard disk access error (connection failure)

19.5.114 CD00F: Hard disk data transfer error

19.5.115 CD020: Hard disk verify error

Relevant parts	
MFP board (MFPB)	Hard disk

Step	Action	WIRING DIAGRAM	
		Control signal	Location (Electrical component)
1	Check the connector between hard disk-MFPB PJ11 for proper connection and correct as necessary.	—	—
2	Reinstall the hard disk.	—	—
3	Change hard disk.	—	—
4	Change MFPB.	—	—

19.5.116 CD010: Hard disk unformat

Relevant parts	
MFP board (MFPB)	Hard disk

Step	Action	WIRING DIAGRAM	
		Control signal	Location (Electrical component)
1	Select [Service Mode] → [State Confirmation] → [Memory/HDD Adj.] → [HDD Format], and conduct the HDD format function.	—	—
2	Change hard disk.	—	—
3	Change MFPB	—	—

19.5.117 CD011: Hard disk out of specifications mounted

Relevant parts	
Hard disk	

Step	Action	WIRING DIAGRAM	
		Control signal	Location (Electrical component)
1	Check the hard disk specifications.	—	—
2	Change the hard disk.	—	—

19.5.118 CD041 to CD046: HDD command execution error

Relevant parts	
Hard disk	

Step	Action	WIRING DIAGRAM	
		Control signal	Location (Electrical component)
1	Check the hard disk specifications.	—	—
2	Format hard disk.	—	—
3	Change the hard disk.	—	—

19.5.119 CD047 to CD04B: HDD SCSI library error

Relevant parts	
Hard disk	

Step	Action	WIRING DIAGRAM	
		Control signal	Location (Electrical component)
1	Check the hard disk specifications.	—	—
2	Format hard disk.	—	—
3	Change the hard disk.	—	—

19.5.120 CD201: File memory mounting error

19.5.121 CD202: Memory capacity discrepancy

19.5.122 CD203: Memory capacity discrepancy 2

Relevant parts	
MFP board (MFPB)	Memory

Step	Action	WIRING DIAGRAM	
		Control Signal	Location (Electrical Component)
1	Check to see if the memory on MFPB is installed correctly.	—	—
2	Change the memory on MFPB.	—	—
3	Change MFPB.	—	—

19.5.123 CD211: PCI-SDRAM DMA operation failure

19.5.124 CD212: Compression/extraction timeout detection

Relevant parts	
MFP board (MFPB)	

Step	Action	WIRING DIAGRAM	
		Control Signal	Location (Electrical Component)
1	Change MFPB.	—	—

19.5.125 CD231: No Fax memory at FAX board mounting

Relevant parts	
MFP board (MFPB)	FAX board

Step	Action	WIRING DIAGRAM	
		Control Signal	Location (Electrical Component)
1	Check to see if the FAX board is installed correctly.	—	—
2	Change MFPB.	—	—

19.5.126 CD241: Encryption ASIC setting error

19.5.127 CD242: Encryption ASIC mounting error

Relevant parts	
MFP board (MFPB)	

Step	Action	WIRING DIAGRAM	
		Control Signal	Location (Electrical Component)
1	Check the MFP board connector for proper connection and correct as necessary.	—	—
2	Change MFPB	—	—

19.5.128 CD261: USB host board failure

Relevant parts	
MFP board (MFPB)	USB host board (EK-604)

Step	Action	WIRING DIAGRAM	
		Control signal	Location (Electrical component)
1	Check the operation with another USB device.	—	—
2	Check the USB host board connector for proper connection and correct as necessary.	—	—
3	Change USB host board.	—	—
4	Change MFPB.	—	—

19.5.129 CD271: i-Option activated and additional memory not installed

Relevant parts	
MFP board (MFPB)	Memory for i-Option (UK-203)

Step	Action	WIRING DIAGRAM	
		Control signal	Location (Electrical component)
1	Check the memory (UK-203) for proper connection and correct as necessary.	—	—
2	Change memory (UK-203).	—	—
3	Change MFPB.	—	—

19.5.130 CD272: i-Option activated and additional memory and HDD not installed

Relevant parts	
MFP board (MFPB) Hard disk	Memory for i-Option (UK-203)

Step	Action	WIRING DIAGRAM	
		Control signal	Location (Electrical component)
1	Check the memory (UK-203) for proper connection and correct as necessary.	—	—
2	Check the HDD for proper connection and correct as necessary.	—	—
3	Change memory (UK-203).	—	—
4	Change HDD	—	—
5	Change MFPB.	—	—

19.5.131 CD3##: NVRAM data error

- When the data stored due to the NVRAM trouble is lost, backup data can be used for restoration.
- Trouble code [C-D370] will be displayed when multiple errors (over 5) of NVRAM data are detected, which can be restored with one restoration command.
- Data backup will be automatically performed every hour. Backup can also be performed manually with the following setting.
  [Service Mode] → [Enhanced Security] → [NVRAM Data Back Up]
  See P.548

1. When a trouble caused by NVRAM data error occurs, the screen below appears.

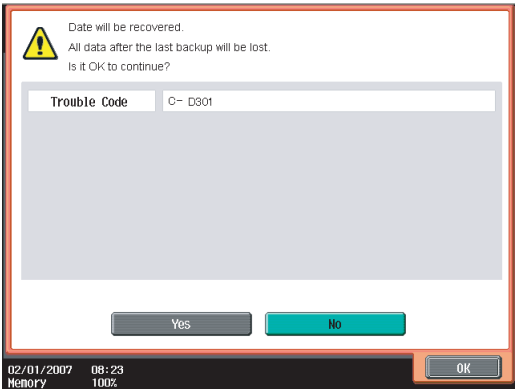

A00JF4E517DA

2. Select [Yes] and touch [OK].
3. The screen will be shifted to the data restoration screen to perform data restoration.

NOTE

- **When the restoration is performed in a short time, data restoration screen may not be displayed.**

4. Check the message which indicates that the data restoration was successfully conducted. Turn OFF the main power switch and turn it ON again more than 10 seconds after.

NOTE

- **In case it failed to restore data, return to the trouble code screen.**

19.5.132 CD401: NACK command incorrect

19.5.133 CD402: ACK command incorrect

19.5.134 CD403: Checksum error

19.5.135 CD404: Receiving packet incorrect

19.5.136 CD405: Receiving packet analysis error

19.5.137 CD406: ACK receiving timeout

19.5.138 CD407: Retransmission timeout

Relevant parts	
MFP board (MFPB)	

Step	Action	WIRING DIAGRAM	
		Control signal	Location (Electrical component)
1	Check whether there is an strong electromagnetic noise source near the main body.	—	—
2	Check the connectors on MFPB for proper connection and correct as necessary.	—	—
3	Change MFPB.	—	—

19.5.139 CE001: Abnormal message queue

19.5.140 CE003: Task error

19.5.141 CE004: Event error

19.5.142 CE005: Memory access error

19.5.143 CE006: Header access error

19.5.144 CE007: DIMM initialize error

Relevant parts	
MFP board (MFPB)	

Step	Action	WIRING DIAGRAM	
		Control signal	Location (Electrical component)
1	Check the connectors on MFPB for proper connection and correct as necessary.	—	—
2	Change MFPB.	—	—

19.5.145 CE002: Message and method parameter failure

Relevant parts	
MFP board (MFPB)	Hard disk

Step	Action	WIRING DIAGRAM	
		Control signal	Location (Electrical component)
1	Turn OFF the main power switch and turn it ON again, and conduct the following setting. [Service Mode] → [System 1] → [Initialization] → [Data Clear]. See P.420	—	—
2	Format hard disk.	—	—
3	Change hard disk.	—	—
4	Change MFPB.	—	—

19.5.146 CEEE1: MFP board malfunction

Relevant parts	
MFP board (MFPB)	

Step	Action	WIRING DIAGRAM	
		Control signal	Location (Electrical component)
1	Check the connectors on MFPB for proper connection and correct as necessary.	—	—
2	Change MFPB	—	—

19.5.147 CEEE2: Scanner section malfunction

Relevant parts	
Exposure unit	CCD board (CCDB) Scanner relay board (REYB/SCAN)

Step	Action	WIRING DIAGRAM	
		Control signal	Location (Electrical component)
1	Correct the connector connection between CCDB and REYB/SCAN if faulty.	—	—
2	Change REYB/SCAN	—	—
3	Change CCDB	—	—

19.5.148 CEEE3: Printer control board malfunction

Relevant parts	
Printer control board (PRCB)	

Step	Action	WIRING DIAGRAM	
		Control signal	Location (Electrical component)
1	Check the PRCB connector for proper connection and correct as necessary.	—	—
2	Change PRCB	—	—

19.5.149 CFB00 to CFF5E: Abort code

Relevant parts	
MFP board (MFPB)	DIMM0/DIMM1

Step	Action	WIRING DIAGRAM	
		Control signal	Location (Electrical component)
1	Check the MFPB connector for proper connection and correct as necessary.	—	—
2	Conduct the following setting. [Service Mode] → [Memory/HDD Adj.] → [Memory Check] → [Detail Check]. When “NG” is displayed, replace the appropriate memory or PWB. WORK0: DIMM0 WORK1: DIMM1 FILE0,1: MFP board	—	—
3	Change MFPB	—	—

20. FAX TROUBLECODE

20.1 ERROR CODES

Code No.	Category	Contents of error	How to correct
B0-01	FAX board error	FAX board error 1 (FAX ROM check sum error)	Pull out and insert the Fax board to check its installation. If the trouble is not yet corrected, hardware of the fax board may be defective. Replace the fax board in such a case.
B0-02	FAX board error	FAX board error 2 (DPRAM check error)	
B0-03	FAX board error	FAX board error 3 (FAX Initialization NG)	
B0-51		FAX board installation error (Line 1).	Pull out and insert the fax board to check its installation. If the trouble is not yet corrected, check if the fax (main) is set to [Unset] on the [System 2]-[Option board Status] screen in the service mode. If it is set to [Unset], set to [Set].
B0-52		FAX board installation error (Line 2).	Pull out and insert the FAX board to check its installation. If the trouble is not yet corrected, check if the fax (Sub) is set to [Unset] on the [System 2]-[Option board Status] screen in the service mode. If it is set to [Unset], set to [Set].
B1-10	FAX driver error	Instance generation error or observer registration error	Turn OFF/ON the main power switch.
B1-11	FAX driver error	Configuration space initialization NG	
B1-12	FAX driver error	Semaphore acquisition, release error	
B1-13	FAX driver error	Sequence error among main body tasks	
B1-14	FAX driver error	Message queue control error	
B1-15	FAX driver error	Main body - sequence error among FAX boards	Pull out and insert the FAX board to check its installation.
B1-16	FAX driver error	FAX board nonresponse (Nonresponse after initialization)	
B1-17	FAX driver error	ACK waiting timeout error	
B1-18	FAX driver error	Receiving undefined frame	
B1-19	FAX driver error	DMA transfer error	
B1-20	JC	Soft error (Fax board side)	Turn OFF/ON the main power switch.
B1-22	JC	Device error (GA LOCAL SRAM)	Turn OFF/ON the main power switch. If the trouble is not yet corrected, hardware of the fax board may be defective. Replace the fax board in such a case.

Code No.	Category	Contents of error	How to correct
B1-23	JC	Device error (DRAM)	Turn OFF/ON the main power switch. If the trouble is not yet corrected, hardware of the fax board may be defective. Replace the fax board in such a case.
B1-25	JC	Device error (GA)	Turn OFF/ON the main power switch. If the trouble is not yet corrected, hardware of the fax board may be defective. Replace the fax board in such a case.
B1-26	JC	Timeout error due to non-response from codec control during suspension process	Turn OFF/ON the main power switch.
B1-27	JC	Timeout error due to non-response from communication control during suspension process	
B1-28	JC	Timeout error due to non-response from LINE control during suspension process	
B1-29	JC	Timeout error due to non-response from the modem to voice response	
B1-30	Driver error (Fax board side)	Driver soft error	
B1-31	Driver error (Fax board side)	Reception frame length error from main	
B1-32	Driver error (Fax board side)	Reception frame header error from main	
B1-33	Driver error (Fax board side)	232C i/f sequence error	
B1-34	Driver error (Fax board side)	DPRAM i/f sequence error	
B1-35	Driver error (Fax board side)	DPRAM CTL/STS register error	
B1-36	Driver error (Fax board side)	ACK waiting timeout	
B1-37	Driver error (Fax board side)	DPRAM RESET reception	
B1-40	Soft error (Fax board side)	MSG I/F error with job control	
B1-41	Soft error	I/F error with driver	
B1-42	I/F error with main	Undefined command reception	

Code No.	Category	Contents of error	How to correct
B1-43	I/F error with main	Command frame length error	Turn OFF/ON the main power switch.
B1-44	I/F error with main	Command parameter length error	
B1-45	I/F error with main	Undefined parameter	
B1-46	I/F error with main	Command/response sequence error	
B1-50	Line control	External class instance acquisition error	
B1-51	Line control	Job start error (starting job parameter error/child job generation error)	
B1-52	Line control	Doc access error (report buf access error)	
B1-53	Line control	Response wait timeout from external task	
B1-54	Line control	Internal que table control error (create/enque/deque)	
B1-60	1 destination control	Instance generation error	
B1-61	1 destination control	Timeout error	
B1-62	1 destination control	Interface error	
B1-63	1 destination control	Message que control error	
B1-64	1 destination control	Semaphore acquisition release error	
B1-65	1 destination control	Observer registration error	
B1-66	1 destination control	Reception resource check error	
B1-67	1 destination control	Deployment error of sending image information	
B1-68	1 destination control	Serialization error of receiving image	
B1-69	1 destination control	Access error to quick memory data	
B1-70	Page control	Internal que table control error (create/enque/deque)	
B1-71	Page control	Instance generation error	
B1-72	Page control	Timeout error	
B1-73	Page control	Interface error	
B1-74	Page control	Semaphore acquisition release error	
B1-75	Page control	Observer registration error	
B1-76	Page control	Unable to check TTI domain	

Code No.	Category	Contents of error	How to correct
B1-77	Page control	Error return from TTI rasterizer	Turn OFF/ON the main power switch.
B1-78	Page control	Receiving job generation error	
B1-79	Page control	Sequence control error (line specification fault, status mismatch, event mismatch)	
B1-80	Page control	Access error to quick sending memory data	
B1-81	Page control	BlockBuff acquisition error	
B1-82	Page control	Sending block image error (Req, restore)	
B1-83	Page control	Receiving block image error (Req, store)	
B1-84	Page control	Storage error of receiving image information	
B1-85	Page control	Receiving data size logic error (Receiving data are not multiples of dotline)	
B1-86	Page control	ImageBuf acquisition (alloc) error	
B1-87	Page control	Error return from compressor	
B1-88	Page control	BandBuf control error (newInstance/get/free)	
B1-90	USB	USB IF error (OS notifies an error during configuration setting after recovery from the sleep or attach.)	
B1-91	USB	USB IF error (EndPoint1: Bulk Out (command, transmitted image data)) (error retry 1 min. timeout)	
B1-92	USB	USB IF error (EndPoint2: Bulk In (response, received image data)) (error retry 5 sec. timeout)	
B1-93	USB	USB IF error (EndPoint3: Interrupt In (fax board status)) (error retry 1 min. timeout)	
B1-94	USB	USB IF error (EndPoint4: Bulk Out (main body status)) (error retry 3 sec. timeout)	
B1-95	USB	USB IF error (Attach not detected for 1 min. after recovery from sleep)	

Code No.	Category	Contents of error	How to correct
B1-96	USB	USB IF error (Detach not detected for 1 min. after recovery from sleep)	Turn OFF/ON the main power switch.

- The error in the Txx/Rxx system may be caused under the effect of line noise, etc. even in usual operating condition.
- If the error arises often, output the activity report, fax setting list, protocol trace list, parameter list, address book list, group address list and program list and obtain detailed information on the error status, conditions which may cause the error, etc. from the user and contact the support center.

Code No.	Category	Contents of Error	How to correct
T00	Sending	T1 timeout. no response obtained from the machine on the other end of the line. (35 second)	Check that the address number is correct.
T01	Sending	T1 over after the mode has been changed (35 seconds)	—
T02	Sending	DCN reception in DIS waiting	The remote station may not receive the data due to paper shortage, full memory, etc.
T03	Sending	Unexpected command reception in DIS waiting	—
T04	Not used		
T05	Sending	FIF not matching with the remote station (remote station without the function).	—
T06	Sending	DCN reception in CFR/FTT waiting	—
T07	Not used		
T08	Sending	Training failure at 2400bps	The line may be in trouble. Check the line noise.
T09	Sending	No response to DCS	The line may be disabled because the user on the remote station dis-connected it.
T10	Not used		
T11	Sending	DCN reception while waiting for post message responses	The remote station may not receive the data due to paper shortage, full memory, etc.
T12	Sending	Unexpected command reception while waiting for post message responses	—
T13	Sending	No response while waiting for post message responses	The remote station may not receive the data due to paper shortage, full memory, etc.
T14	Not used		
T15	Not used		
T16	Not used		
T17	Not used		

Code No.	Category	Contents of Error	How to correct
T18	Sending	No reception ability in a remote station	The remote station may not receive the data due to paper shortage, full memory, etc.
T19	Not used		
T20	Not used		
T21	Not used		
T22	Not used		
T23	Not used		
T24	Not used		
T25	Not used		
T26	Not used		
T27	Not used		
T28	ECM sending	Timeout by RR/RNR (60 seconds)	—
T29	Not used		
T30	Not used		
T31	Not used		
T32	ECM sending	Fall back over by CTC	The line may be in trouble. Check the line noise.
T33	Not used		
T34	Not used		
T35	ECM transmission	No responses to RR	—
T36	ECM transmission	DCN reception to RR	—
T37	Not used		
T38	F code polling tx	SID is received when SEP is received	—
T39	Not used		
T40	Calling	Software error at calling	—
T41	Not used		
T42	Sending	RTN/PIN reception	—
T43	Sending	Three continuous CRP signal reception	—
T44	Sending	Time error between frames at transmission	—
T45	Not used		
T46	Not used		
T47	Not used		
T48	Check Destination	Line disconnected due to no match as a result of CSI check.	Telephone number may not be set on the remote station. Check the CSI signal of the remote station in the protocol trace list.
T49	Not used		
T50	FAX-CSRC	Host terminal ID inconsistency	—
T51	Not used		

Code No.	Category	Contents of Error	How to correct
T52	Not used		
T53	Not used		
T54	Not used		
T55	Not used		
T56	Not used		
T57	Not used		
T58	Polling reception	Calling by polling reception, but a remote station does not have polling transmission documents	Polling original may not be set on the remote station.
T59	Not used		
T60	Polling transmission	Received the polling transmission request (DTC), but there are no polling transmission documents	Polling original may not be set on your machine. Polling TX is enabled only when the polling transmission original is registered.
T61	F-code polling transmission	Unsatisfactory conditions for receive polling tx request.	Bulletin board original may not be set. Bulletin board TX is enabled only when the bulletin board transmission original is registered.
T62	F-code polling transmission	Box number specified by SEP is not valid.	Bulletin board box number from the remote station may be incorrect.
T63	Not used		
T64	Not used		
T65	Not used		
T66	Not used		
T67	Not used		
T68	Not used		
T69	Not used		
T70	Not used		
T71	Not used		
T72	Not used		
T73	Transmission	Modem response waiting T.0 (60 seconds)	—
T74	V34	No changes in the V34 modem status	—
T75	V34	V34 signal sending error	—
T76	V34	CS2 is not turned to ON	—
T77	Not used		
T78	Transmission	Codec control soft ware error	—
T79	Transmission	Job control soft error at transmission	—
T80	Call control	LOOP current detection NG when CML is turned ON at calling	The line may not be connected. Check the line connection status.
T81	Call control	Dial Tone detection NG when CML is turned ON at calling	The line may not be connected. Check the line connection status.
T82	Call control	Answer tone (CED/DIS) waiting timeout after dialing at calling	—

Code No.	Category	Contents of Error	How to correct
T83	Call control	Busy tone detection at calling	—
T84	Call control	Line control dial error	—
T85	Call control	Short disconnection was detected after LOOP current detection at calling	—
T86	Not used		
T87	Not used		
T88	Not used		
T89	Control unit	When the control unit is connected, a communication error is caused due to capacity shortage and communication is finished.	—
T90	Not used		
T91	Not used		
T92	Not used		
T93	Not used		
T94	Not used		
T95	Call control	When called, short disconnection of LOOP current was detected during a call	—
T96	Not used		
T97	Transfer	Transmission request was received with no fax board installed. *	—
T98	Transfer	Transmission request of images that cannot be transmitted were received. * (Color images)	—
T99	Call control	Remote stations number is deleted while waiting for abbreviated or one-touch re-dialing (redial / transmission / polling reception) *	—
R00	Reception	DCS was not received within 35 seconds (T1 over)	The dialed telephone number may be incorrect.
R01	Reception	T1 timeout after EOM sending	—
R02	Reception	DCN reception in DCS waiting	The line may be disabled because the user on the remote station disconnected it.
R03	Reception	Unexpected command reception in DCS waiting	—
R04	Reception	FIF error of DCS	—
R05	Not used		
R06	Not used		

* The corresponding error code is not displayed on the control panel even if the error occurs.

Code No.	Category	Contents of Error	How to correct
R07	Reception	Image information does not come in image information waiting	The line may be disabled because the user on the remote station disconnected it.
R08	Reception	CD OFF while receiving image information	
R09	Reception	DCN reception in post message waiting	
R10	Reception	Unexpected command reception in post message waiting	—
R11	Reception	Command was not received which waiting for post message	The line may be disabled because the user on the remote station disconnected it.
R12	Reception	Timeout during EOL-EOL	—
R13	Not used		
R14	Not used		
R15	Not used		
R16	Not used		
R17	Not used		
R18	Reception	Resource check error (line disconnected due to ongoing communication)	Space in the hard disk may become short. Unnecessary data should be deleted to secure the space in the hard disk.
R19	Not used		
R20	Reception	Line disconnection by receive reject function	Call was received from a user who is in the register of addresses to be rejected.
R21	CUG reception	No match of password in the closed network RX setting	Check the password.
R22	CUG reception	No password received in the closed network RX setting	Check the setting of closed network RX.
R23	Not used		
R24	ECM reception	RR-RNR repeats for 2 minutes	—
R25	ECM reception	Command was not received while waiting for responses to RNR	—
R26	ECM reception	Unexpected command was received while waiting for responses to RNR	—
R27	ECM reception	DCN reception while waiting for responses to RNR	—
R28	ECM Reception	The counter is abnormal of the post messages received (PC/BC).	
R29	ECM reception	Timeout (35 seconds) between frames occurred	—
R30	Not used		
R31	Not used		
R32	Reception	Line disconnected because there is no appropriate confidential user box while automatic user box generation is inhibited.	Confidential box No. received from the remote station may be incorrect.

Code No.	Category	Contents of Error	How to correct
R33	Reception	DIS reception to DTC (German specifications only)	—
R34	F code confidential reception	PWD was received when SUB was received.	—
R35	Not used		
R36	Not used		
R37	V34	CS2 is not turned to ON.	—
R38	V34	No change in V34 modem and status	—
R39	Not used		
R40	When called	Soft error when called	—
R41	Not used		
R42	Not used		
R43	Not used		
R44	Not used		
R45	Reception	Phase C timeout (NonECM reception only)	—
R46	Not used		
R47	Not used		
R48	Not used		
R49	Reception	DCN reception while waiting for image information	The line may be disabled because the user on the remote station disconnected it.
R50	Reception	No. of error lines exceeds.	The line may be in trouble. Check the line noise.
R51	Not used		
R52	Not used		
R53	Not used		
R54	Not used		
R55	Not used		
R56	Not used		
R57	Not used		
R58	Not used		
R59	Not used		
R60	Reception	Reception image error (RTN/PIN sending)	The line may be in trouble. Check the line noise.
R61	Not used		
R62	Not used		
R63	Reception	Three continuous CRP signal reception	—
R64	Not used		
R65	Not used		
R66	SEP polling	SEP polling transmission request was received without SEP polling transmission ability	—

Code No.	Category	Contents of Error	How to correct
R67	SUB reception	SUB was directed without SUB reception ability	—
R68	Not used		
R69	ECM reception	Communications are cut when EOR is received.	The line may be in trouble. Check the line noise.
R70	ECM reception	Decode error occurred in ECM	—
R71	Reception	RTC detection error (No. of EOL is smaller than FP.)	—
R72	Reception	Long original longer than a predetermined length value is received (1000 mm).	Longer original than specified is received from the remote station.
R73	Reception	Modem response waiting T.0 (60 seconds)	—
R74	Reception	Reception byte size error	—
R75	V34	V34 signal sending error	—
R76	V34	Unexpected command was received in V34 mode phase C reception	—
R77	Reception	Codec control error	—
R78	Reception	Codec control software error	—
R79	Reception	Job control soft error during reception	—
R80	Not used		
R81	Not used		
R82	Not used		
R83	Not used		
R84	Not used		
R85	—	R-ISW request received when a machine is running in case of either reserved job exists, image exists in memory, or jam happened.	—
R86	Not used		
R87	Not used		
R88	Not used		
R89	Not used		
R90	Not used		
R91	Not used		
R92	Turnaround	When the turnaround function is not provided, the line is disconnected if a turnaround order (DTC) is received.	—
R93	F-code reception	Unsatisfactory conditions for confidential Rx request	Check the Confidential password.
R94	F-code reception	Unsatisfactory conditions for relay request	Check the Relay password.
R95	F-code reception	Unsatisfactory conditions for forwarding request	—

Code No.	Category	Contents of Error	How to correct
R96	F-code reception	Confidential box number specified by SUB is not valid.	Confidential box No. received from the remote station may be incorrect.
R97	F-code reception	Unsatisfactory conditions for PC-FAX RX request (Function, PW unmatching)	—
R98	Not used		
R99	Others	Reception command was received from the whole control side before reception signals were detected.	—

20.2 DIAGNOSTIC CODES

20.2.1 Outline

- The diagnostic code is a 22-digit hexadecimal code indicating a communication conditions and status.
- The diagnostic code is printed on the activity report.
- The purpose of the diagnostic code is to obtain detailed information of communication results and conditions so as to analyze communication troubles.

20.2.2 Explanation

XX XX XX XX XX XX XX XX XX XX XX XX XX XX XX XX XX XX XX XX XX XX XX
(1) (2) (3) (4) (5) (6) (7) (8) (9) (10)(11)(12)(13)(14)(15)(16)(17)(18)(19)(20)(21)(22)

Item	Description							
	bit7	bit6	bit5	bit4	bit3	bit2	bit1	bit0
(1) Types of call out / called	F network called (Japan)	PSTN called	Dial-in (Japan)	Tele-phone	Group	One-touch dialing	Abbreviated dialing	Key pad dialing
(2) Communication mode	Sending	Error page resending	Forwarding transmission	Polled transmission	Receiving	Recovery transmission	Called turn-around	Polling Rx
(3) Applied function specification	Mixed size transmission All pages/ cover	Frame erasure transmission	Book mode transmission	2in1trans mission	Original size appointing Tx	Upside down	Special scanning non standard/Z-fold/Long	Line used line 1 / 2
(4) One-time communication parameter specification	Timer Tx	(not used)	CSRC	PC-Fax transmission (RX/V2)	V.34 appoint transmission	F-code transmission	ECM Specification TX	International mode transmission
(5) Box Type/ No. (9th digit)	Relay	Confidential	Manual transmission	Bulletin	BOX No. 9th digit [BCD] (Top)			
(6) BOX No. (8th & 7th digits)	BOX No. 8th digit [BCD]				BOX No. 7th digit [BCD]			
(7) BOX No.(6th & 5th digits)	BOX No. 6th digit [BCD]				BOX No. 5th digit [BCD]			
(8) H_RES specification 1 (HR)	400dpi	300dpi	200dpi	(not used)	16pels/ mm	not used	8pels/ mm	(not used)
(9) V_RES specification 1	400dpi	300dpi	200dpi	100dpi	15.4 l/ mm	(not used)	7.7 l/mm	3.85 l/ mm

Item	Description							
	bit7	bit6	bit5	bit4	bit3	bit2	bit1	bit0
(10) Coding specification/ H_RES specification (600dpi)	600dpi (H)	(not used)	(JPEG)	JBIG	MMR	MR	MH	THRU
(11) Original length specification/ V_RES specification (600dpi)	600dpi (V)	(not used)	(Legal)	(Letter)	A3	B4	A4	(not used)
(12) Original length specification	(not used)	No limits	(Legal)	(Letter)	(not used)	B4	A4	(not used)
(13) Speed specification 0	(not used)	(not used)	(not used)	V.29-96	V.29-72	(not used)	V.27-48	V.27-24
(14) Speed specification 1	V.17-144	V.17-120	V.17-96	V.17-72	(V.33-144)	(V.33-120)	(V.33-96)	(V.33-72)
(15) Speed specification 2	V.34-192	V.34-168	V.34-144	V.34-120	V.34-96	V.34-72	V.34-48	V.34-24
(16) Speed specification 3	(not used)	(not used)	V.34-336	V.34-312	V.34-288	V.34-264	V.34-240	V.34-216
(17) MSLT specification	(not used)	(not used)	(not used)	(not used)	(not used)	MSLT of resolution shown as vertical RES		
(18) Communication parameter specification	ECM frame size 0:256 / 1:64	ECM	DIAG(CSRC)	(BFT)	(BTM)	PWD	SEP	SUB
(19) Remote station coding specification	(not used)	(not used)	(JPEG)	JBIG	MMR	MR	MH	THRU
(20) Remote station communication parameter (capability)	ECM frame size 0:256 / 1:64	ECM	DIAG(CSRC)	(BFT)	(BTM)	PWD	SEP	SUB

Item	Description							
	bit7	bit6	bit5	bit4	bit3	bit2	bit1	bit0
(21) BOX no (4th & 3rd digit)	BOX No. 4th digit [BCD]				BOX No. 3rd digit [BCD]			
(22) BOX no. (2nd & 1st digits)	BOX No. 2nd digit [BCD]				BOX No. 1st digit [BCD]			

Supplement: (Not used) bit is set to 0.

20.3 Error Code (Network fax)

- When there occurs any trouble with this machine, the error screen is displayed. And on this error screen, the following error message is shown. Take a necessary step referring to the table given below.

20.3.1 Error code of the transmission system

Code	Classification	Details of the error	Redial	Corrective Action
N10	Connection error	Server connection error	Yes	Check the condition of the other party machine. Check the network setting of local machine. Ask the network administrator if the network is operating normally.
N11	Connection error	Connection declined by the other party machine	No	Reception is declined. Check the condition of the other party machine.
N12	Connection error	Disconnection of the line	Yes	Check to see if there occurs any abnormal condition with the network, such as the disconnection of a cable.
N13	Connection error	No response received from the network	No	Check the condition of the other party machine. Check the network setting of local machine. Ask the network administrator if the network is operating normally.
N14	Connection error	Mail delivery error	No	Check the condition of the other party machine. Send it again after waiting for a while.
N15	Remote reset	Connection reset by the other party machine	Yes	Check the condition of the other party machine. Send it again after waiting for a while.
N16	Remote busy	Remote machine is busy	Yes	Check the condition of the other party machine. Send it again after waiting for a while.
N17	LAN access	Communication time out	Yes	Check the condition of the other party machine. Send it again after waiting for a while.

Code	Classification	Details of the error	Redial	Corrective Action
N18	Network	Network	No	Check the each settings. Check to see if there occurs any abnormal condition with the network, such as the disconnection of a cable. After turning off and on the main power switch, send it again.
N20	Memory error	Memory overflow	No	The memory is full. Check to see if there is any other job being handled. With the number of transmission sheets reduced or the resolution for read reduced, send it again.
N21	HDD error	HDD error	No	HDD is full. Delete unnecessary files. With the number of transmission sheets reduced or the resolution for read reduced, send it again.
N22	Conversion error	Conversion error	No	After turning off and on the main power switch, send it again.
N25	Memory overflow	Memory overflow	No	The memory is full. Check to see if there is any other job being handled. With the number of transmission sheets reduced or the resolution for read reduced, send it again.
N35	Forward TX	A request for transmission has been received with the NetFAX with the Function Settings OFF. (A request for transfer of the IP address FAX while the IP Address FAX function is being OFF in the service mode.)	No	-
N36	Forward TX	A request has been received for transmission of images that cannot be sent.	No	-

20.3.2 Error code of the reception system

Code	Classification	Details of the error	Corrective Action
N50	SMTP reception	SMTP reception error	When the SMTP reception does not start in 60 minutes after connection for an incoming call, this error may be resulted. Ask the sender to send it again.
N51	Decode	In excess of the length specified for reception	Ask the sender to send it again after the length of the text being reduced.
N52	Decode	In excess of the number of pages specified for reception	Ask the sender to send it again after the number of text sheets being reduced.
N53	Decode	File error	Ask the sender to send it again in a correct file format as shown below. Internet Fax: TIFF IP Address Fax: PDF or TIFF
N54	Decode	Decode error	The data has been received in an incorrect format. Ask the sender to send it again in a correct format.

21. NETWORK ERROR CODE

21.1 Display procedure

- It displays the error code when a network error occurred.
- Network error code is displayed only when the following setting is in “Display.”
  [Administrator Settings] → [Network Settings] → [Detail Settings] → [Error Code Display Setting]

21.2 List

Function	Code	Description
IEEE802.1X	1	• Connection has already been established.
	2	• Parameter error.
	3	• Unable to find the destination AP (SSID).
	4	• The authentication mode does not match the AP (IEEE8021X/WPA-EAP/WPA-PSK/NONE).
	5	• Negotiation of the EAP method failed.
	6	• The EAP authentication failed (user ID, password, certificate, etc.)
	7	• Encryption negotiation with the AP failed (TKIP/CCMP).
	8	• Failed to retrieve the client certificate.
	9	• The client certificate has expired.
	10	• Verification error of the server certificate (EAP-TLS/EAP-TTLS/PEAP).
	11	• Although the WPA-PSK mode is selected, the Pre-Shared Key is not specified.
	12	• An authentication error occurred in the WPA-PSK mode (un-matched Pre-Shared Key).
	13	• The phase 2 method is not specified (PEAP).
	14	• Negotiation of the phase 2 method failed (PEAP).
	15	• Response from the server has timed out.
	16	• Failed to allocate memory.
	17	• Failed to start the supplicant task.
	18	• The driver does not work.
	19	• The server certificate has expired (EAP-TLS/EAP-TTLS/PEAP).
	20	• CA verification error of the server certificate (EAP-TLS/EAP-TTLS/PEAP).
	21	• Server ID verification error of the server certificate (EAP-TLS/EAP-TTLS/PEAP).
	22	• The CA certificate is not specified (EAP-TLS/EAP-TTLS/PEAP).
	23	• The server ID is not specified (EAP-TLS/EAP-TTLS/PEAP).
	24	• The setting combination is correct.
	25	• Connection and authentication are complete.
	26	• The server certificate does not have the expected usage (EAP-TLS/EAP-TTLS/PEAP).
	27	• The server certificate has expired (EAP-TLS/EAP-TTLS/PEAP).
	28	• Access to the server to check for expiration of the server certificate is rejected (EAP-TLS/EAP-TTLS/PEAP).

Function	Code	Description
IEEE802.1X	29	• Access to the server to check for expiration of the server certificate has timed out (EAP-TLS/EAP-TTLS/PEAP).
	30	• Unable to check for expiration because the CRL size that has been retrieved to check for the expiration of the server certificate exceeds the maximum capacity that can be retained (1MB) (EAP-TLS/EAP-TTLS/PEAP).
	31	• Incorrect format of the server certificate (EAP-TLS/EAP-TTLS/PEAP).
	32	• Verification of the server certificate is invalid (EAP-TLS/EAP-TTLS/PEAP).
	33	• Although the environment is configured to use the HDD, it is unable to perform verification because the HDD path has not been specified (EAP-TLS/EAP-TTLS/PEAP).
	34	• Unable to perform verification because there are too many certificates to be verified (the maximum number of certificates that can be verified at a time is 20) (EAP-TLS/EAP-TTLS/PEAP).
	35	• Parameter error of the certificate (EAP-TLS/EAP-TTLS/PEAP).
	36	• Internal error of the certificate verification (EAP-TLS/EAP-TTLS/PEAP).
LDAP	1	• An invalid operation occurred.
	4	• The number of search results has exceeded the maximum number of items allowed.
	7	• The LDAP server does not support SASL.
	10	• Unable to trace the link although Referral is specified.
	32	• Cannot find the search route.
	49	• Failed to log in to the LDAP server.
	80	• An unexpected error occurred.
	85	• The connection has timed out.
	86	• The supported SASL does not match the LDAP server side.
	88	• Cancelled by the user.
	90	• A memory shortage occurred.
	91	• Unable to connect to the LDAP server.
	92	• The supported LDAP version does not match the LDAP server side.
	128	• Failed to resolve the LDAP server name using the DNS server.
	129	• The certificate of the LDAP server has expired.
	130	• Mutual authentication using GSS-SPNEGO (Kerberos v5) failed.
	131	• The search result remains.
	2238	• The CN field of the LDAP server certificate does not match the server address.
	2239	• The LDAP server certificate does not have the expected usage for a server.
	2240	• The LDAP server certificate is not trusted. • To trust the certificate, the certificate must be registered to the system.
	2241	• The LDAP server certificate has expired.
	2242	• The CA server rejected the connection.
	2243	• The connection to the server that checks for expiration of the certificate has timed out.

Function	Code	Description
LDAP	2244	• Unable to check for expiration because the CRL size exceeds the maximum capacity that can be retained (1MB).
	2261	• The format of the LDAP server certificate is invalid.
	2263	• Although the environment is configured to use the HDD, it is unable to perform verification because the HDD path has not been specified.
	2264	• Unable to perform verification because there are too many certificates to be verified (the maximum number of certificates that can be verified at a time is 20).
	2266	• Internal error of the certificate verification.
	2267	• The device certificate does not exist.
	2268	• No certificate is sent from the server.
E-Mail/ Internet Fax	1	• Failed to log in to the E-mail server.
	2	• An internal error occurred.
	3	• Failed to connect to the server.
	4	• The connection has timed out.
	5	• Decoding failed due to invalid MIME format or S/MIME format.
	6	• Available free memory is insufficient. Reception is not possible.
	9	• Failed to delete an E-mail message.
	10	• The mail box is full.
	11	• Failed to search the certificate.
	12	• Failed to retrieve the device certificate or private key.
	13	• An I/O error occurred. • An HDD operation error occurred, or memory capacity of the computer may be insufficient.
	14	• The S/MIME function is disabled.
	15	• The HDD is disabled.
	16	• The format of the certificate from the E-mail sender is invalid.
	2236	• The certificate has expired, or the validity period has not yet started.
	2238	• The CN field of the certificate does not match the server address.
	2239	• The certificate does not have the expected usage.
	2240	• The certificate is not trusted. To trust the certificate, the certificate must be registered to the system.
	2241	• The certificate has expired.
	2242	• The CA server rejected the connection.
	2243	• The connection to the server that checks for expiration of the certificate has timed out.
	2244	• Unable to check for expiration because the CRL size exceeds the maximum capacity that can be retained (1MB).
	2261	• The format of the certificate is invalid.
	2263	• Failed to initialize the certificate verification.
	2264	• Unable to perform verification because there are too many certificates to be verified (the maximum number of certificates that can be verified at a time is 20).
	2266	• Internal error of the certificate verification.
	2267	• The device certificate does not exist.

Function	Code	Description
E-Mail/ Internet Fax	2268	• No certificate is sent from the server.
FTP transmission	22	• Parameter error (e.g. the file name is NULL).
	27	• Parameter is invalid.
	42	• The specified protocol is unavailable.
	52	• The process is cancelled by a device reset.
	55	• A buffer shortage occurred.
	56	• The FTP connection is already open.
	57	• Failed to connect to the server.
	60	• The connection has timed out.
	61	• The connection has been interrupted.
	62	• The device is not connected to the network.
	70	• The network connection is busy.
	450	• The file has not been deleted.
	451	• The file transfer failed (e.g. due to insufficient server capacity).
	452	• The file transfer failed (e.g. due to insufficient server capacity).
	530	• Incorrect login name or password.
	550	• The specified folder does not exist.
	552	• The file operation failed (e.g. due to insufficient server capacity).
SMB transmission	42	• The specified protocol is unavailable.
	52	• The process is cancelled by a device reset.
	55	• A buffer shortage occurred.
	57	• Failed to connect to the server.
	62	• The device is not connected to the network. • The connection has been interrupted.
	70	• The network connection is busy.
	4096	• The host name is not specified. • The specified host name does not exist on the network.
	4097	• The user name is not specified. • Unable to log in with the specified user name and password. • The user does not have write permission to the folder. • Failed to log in due to an SMB protocol error.
	4098	• The folder name is not specified. • The specified folder does not exist.
	4099	• The user name is not specified. • Unable to log in with the specified user name and password. • The user does not have write permission to the folder. • Failed to log in due to an SMB protocol error.
	4100	• The specified file name is invalid.
	4101	• The specified file already exists and is write-protected. • The folder and the disk are write-protected.
	4102	• The specified media to be written is not formatted. • The file system of the specified media to be written is faulty.
	4103	• The server capacity is full.
	4104	• The server capacity has become full while writing data.

Function	Code	Description
SMB transmission	4105	• Other errors to which an error code is not assigned.
	10000	• Failed in authentication using a PKI card.
	12236	• The certificate has expired, or the validity period has not yet started.
	12239	• The certificate does not have the expected usage.
	12240	• The certificate is not trusted. To trust the certificate, the certificate must be registered to the system.
	12241	• The certificate has expired.
	12242	• The CA server rejected the connection.
	12243	• The connection to the server that checks for expiration of the certificate has timed out.
	12244	• Unable to check for expiration because the CRL size exceeds the maximum capacity that can be retained (1 MB).
	12263	• Although the environment is configured to use the HDD, it is unable to perform verification because the HDD path has not been specified.
	12264	• Unable to perform verification because there are too many certificates to be verified (the maximum number of certificates that can be verified at a time is 20).
	12266	• Internal error of the certificate verification.
	12267	• The device certificate does not exist.
	12268	• No certificate is sent from the server.
SMTP transmission	22	• Invalid argument.
	27	• The file size is too large.
	28	• Insufficient memory of the device.
	32	• The pipe is broken.
	42	• The specified protocol is unavailable.
	51	• Unable to reach the destination network.
	52	• The connection aborted by the network.
	55	• A buffer shortage occurred.
	57	• The socket is not connected.
	58	• The connection has been interrupted.
	60	• The operation has timed out.
	61	• The connection is rejected.
	62	• The device is not connected to the network.
	67	• The host is shut down.
	70	• The operation is expected to be blocked.
	421	• SMTP server error. Since the service is unavailable, the transfer channel is closed.
	432	• SMTP server error. The password must be changed.
	450	• SMTP server error. Unable to access to the mail box.
	451	• SMTP server error. The requested action has been cancelled because an error occurred while processing a job.
	452	• SMTP server error. Shortage of the system storage capacity.
	453	• SMTP server error. No E-mail massage.

Function	Code	Description
SMTP transmission	454	• SMTP server error. Temporary authentication failure.
	458	• SMTP server error. Unable to queue a message to the node.
	459	• SMTP server error. The node is not permitted.
	499	• SMTP server error. An unsupported SMTP error code of 400s is received from the SMTP server.
	500	• SMTP server error. Syntax error (command unrecognized).
	501	• SMTP server error. Syntax error in parameters or arguments.
	502	• SMTP server error. The command is not implemented.
	503	• SMTP server error. Bad sequence of commands.
	504	• SMTP server error. The command parameter is not implemented.
	521	• SMTP server error. The server does not receive E-mail messages.
	530	• SMTP server error. The access is rejected.
	534	• SMTP server error. The authentication mechanism is too weak.
	535	• SMTP server error. Authentication error.
	538	• SMTP server error. The requested authentication mechanism requires encryption.
	550	• SMTP server error. The requested action is not executed.
	551	• SMTP server error. The user is not connected locally.
	552	• SMTP server error. The requested E-mail action is cancelled.
	553	• SMTP server error. The requested action is not accepted.
	554	• An SMTP server error, or an internal error when sending data. The transaction failed.
	555	• SMTP server error. MAIL/RCPT parameter error.
	599	• SMTP server error. An unsupported SMTP error code of 500s is received from the SMTP server.
	2236	• The certificate has expired, or the validity period has not yet started.
	2238	• The CN field of the certificate does not match the server address.
	2239	• The certificate does not have the expected usage.
	2240	• The certificate is not trusted. • To trust the certificate, the certificate must be registered to the system.
	2241	• The certificate has expired.
	2242	• The CA server rejected the connection.
	2243	• The connection to the server that checks for expiration of the certificate has timed out.
	2244	• Unable to check for expiration because the CRL size exceeds the maximum capacity that can be retained (1MB).
	2261	• The format of the certificate is invalid.
	2263	• Failed to initialize the certificate verification.
	2264	• Unable to perform verification because there are too many certificates to be verified (the maximum number of certificates that can be verified at a time is 20).
	2266	• Internal error of the certificate verification.
	2267	• The device certificate does not exist.

Function	Code	Description
SMTP transmission	2268	• No certificate is sent from the server.
	3000	• An unexpected error occurred.
	3001	• An unexpected error occurred within the library being used.
	3002	• An invalid channel is specified.
	3003	• SMTP server address is invalid.
	3004	• Parameter error (MIMEBodyHeader).
	3005	• Parameter error (DisplayName).
	3006	• Parameter error (character set).
	3007	• Parameter error (From address).
	3008	• Parameter error (To address).
	3009	• Parameter error (CC address).
	3010	• Parameter error (BCC address).
	3011	• Parameter error (pEmailSet is NULL).
	3012	• Parameter error (destination certificate is NULL).
	3013	• Parameter error (E-mail body).
	3014	• The HDD is disabled.
	3015	• The S/MIME function is disabled.
	3016	• The device certificate cannot be used in S/MIME (e.g. self-signed certificate error, the private key type is not RSA).
	3018	• An invalid encryption algorithm is specified.
	3019	• An invalid signature algorithm is specified.
	3020	• The E-mail address included in the destination certificate does not match the destination address (To/Cc/Bcc).
	3021	• The E-mail address included in the certificate does not match the sender (From) address.
	3022	• Format error of the certificate.
	3023	• Parameter error (Disposition-Notification-To).
	3024	• Message syntax error of the receiver side.
	3025	• The SMTP server does not support the STARTTLS command.
WebDAV transmission	22	• The format of the URL of the target resource is invalid. • Parameter error.
	27	• Attempted to send data that exceeds the maximum transferrable size for transfer coding.
	42	• The specified protocol is unavailable.
	52	• The process is cancelled by a device reset.
	55	• A buffer shortage occurred.
	56	• The connection has already been established.
	57	• The connection to the WebDAV server failed (including connection time out).
	62	• The device is not connected to the network.
	70	• The network connection is busy.
	72	• The connection has been interrupted with the condition that is insufficient to the specified size.
	401	• Authentication error.

Function	Code	Description
WebDAV transmission	407	• Proxy authentication error.
	1001	• The server does not support WebDAV. • Unable to upload data to the server.
	1002	• The intermediate resource is not a collection (directory) (e.g. the specified folder does not exist).
	1003	• The target resource is a collection (directory).
	1011	• Although “https” is specified for the resource URL, it is unavailable because the SSL library is not included for the modularity.
	1012	• Although “https” is specified for the resource URL, the connection is interrupted because the WebDAV server certificate has expired.
	1013	• The CONNECT method is issued to the proxy server to establish an SSL connection via a proxy, but it is rejected.
	1017	• A communication error occurred while sending a request.
	1018	• A communication error occurred while receiving a response.
	1027	• nContentLength exceeds the maximum transferable size.
	1030	• Although use of a proxy has been specified, the proxy setting information is unavailable.
	1031	• The connection to the proxy server failed (including connection time out).
	1098	• Failed in chunk TX to SharePoint Server.
	1099	• Other internal error occurred (e.g. memory shortage).
	2236	• The certificate has expired, or the validity period has not yet started.
	2238	• The CN field of the certificate does not match the server address.
	2239	• The certificate does not have the expected usage.
	2240	• The certificate is not trusted. • To trust the certificate, the certificate must be registered to the system.
	2241	• The certificate has expired.
	2242	• The CA server rejected the connection.
	2243	• The connection to the server that checks for expiration of the certificate has timed out.
	2244	• Unable to check for expiration because the CRL size exceeds the maximum capacity that can be retained (1MB).
	2261	• The format of the certificate is invalid.
	2263	• Failed to initialize the certificate verification.
	2264	• Unable to perform verification because there are too many certificates to be verified (the maximum number of certificates that can be verified at a time is 20).
	2266	• Internal error of the certificate verification.
	2267	• The device certificate does not exist.
	2268	• No certificate is sent from the server.

Function	Code	Description
SMB browsing	32	• The connection has been interrupted.
	42	• The specified protocol is unavailable.
	57	• Failed to connect to the server.
	62	• The device is not connected to the network. • The internal channel detected an error immediately before establishing communication.
	67	• The host is shut down.
	4096	• The group name/host name is not specified. • The specified group name/host name does not exist on the network.
	4097	• The user name is not specified. • Unable to log in with the specified user name and password. • Failed to log in due to an SMB protocol error.
	4098	• Administrative shares do not exist. • The shared resource name is not specified. • The shared resource does not exist.
	4099	• The user name is not specified. • Unable to log in with the specified user name and password. • Failed to log in due to an SMB protocol error.
	4102	• The specified media to be written is not formatted. • The file system of the specified media to be written is faulty.
	4105	• Other errors to which an error code is not assigned.
	4352	• The browser machine (master browser/backup browser) is not found.
	4353	• Unable to log in to the browser machine (master browser/backup browser).
	4354	• The sub folder does not exist.
	4355	• The request is not accepted due to an invalid call sequence etc.
	4368	• The number of groups is too large.
	4369	• The number of host PCs is too large.
	4370	• The number of shared resources is too large.
	10000	• Failed in authentication using a PKI card.
	12236	• The certificate has expired, or the validity period has not yet started.
	12239	• The certificate does not have the expected usage.
	12240	• The certificate is not trusted. To trust the certificate, the certificate must be registered to the system.
	12241	• The certificate has expired.
	12242	• The CA server rejected the connection.
	12243	• The connection to the server that checks for expiration of the certificate has timed out.
	12244	• Unable to check for expiration because the CRL size exceeds the maximum capacity that can be retained (1 MB).
	12263	• Although the environment is configured to use the HDD, it is unable to perform verification because the HDD path has not been specified.
	12264	• Unable to perform verification because there are too many certificates to be verified (the maximum number of certificates that can be verified at a time is 20).
	12266	• Internal error of the certificate verification.

Function	Code	Description
SMB browsing	12267	• The device certificate does not exist.
	12268	• No certificate is sent from the server.
User authentication	1	• Invalid parameter (e.g. the number of characters exceeds the limit, blank). • The authentication function setting is disabled.
	2	• Failed to resolve the name using the DNS server.
	3	• Unable to find the authentication server.
	4	• Failed to authenticate.
	5	• Failed to allocate memory. • An unexpected error occurred (which does not occur under normal usage conditions).
	6	• An authentication request is received while an internal task of the user authentication client is being performed.
	7	• The connection was interrupted while the user authentication was being performed.
	10000	• Failed in authentication using a PKI card.
	12236	• The certificate has expired, or the validity period has not yet started.
	12239	• The certificate does not have the expected usage.
	12240	• The certificate is not trusted. To trust the certificate, the certificate must be registered to the system.
	12241	• The certificate has expired.
	12242	• The CA server rejected the connection.
	12243	• The connection to the server that checks for expiration of the certificate has timed out.
	12244	• Unable to check for expiration because the CRL size exceeds the maximum capacity that can be retained (1 MB).
	12261	• The format of the certificate is invalid.
	12263	• Although the environment is configured to use the HDD, it is unable to perform verification because the HDD path has not been specified.
	12264	• Unable to perform verification because there are too many certificates to be verified (the maximum number of certificates that can be verified at a time is 20).
	12266	• Internal error of the certificate verification.
WebDAV client	2	• The ID of the client that is not opened is specified.
	3	• The reception has timed out.
	4	• A reception error occurred. • An invalid request URL is specified.
	5	• Content-Length or the received data size exceeds the maximum transferable size. • The size of the message body is too large.
	6	• The process is cancelled by a device reset. • The size of the message body exceeds the maximum transferable size.
	7	• An internal error occurred. • The process is cancelled by an internal reset.
	8	• Failed to connect to the WebDAV server.
	9	• An error occurred while sending data to the WebDAV server.

Function	Code	Description
WebDAV client	10	• A timeout occurred while sending data to the WebDAV server.
	11	• Failed to connect to the proxy server.
	12	• The proxy server rejected the connection request.
	13	• Although use of a proxy has been specified, the proxy setting in-formation is unavailable.
	14	• Failed to authenticate the proxy server.
	15	• Other error was returned from the proxy server.
	16	• An internal error occurred.
	17	• The process is cancelled because MIO_REQBODY_ERROR is specified by the device application.
	2236	• The certificate has expired, or the validity period has not yet started.
	2238	• The CN field of the certificate does not match the server address.
	2239	• The certificate does not have the expected usage.
	2240	• The certificate is not trusted. • To trust the certificate, the certificate must be registered to the system.
	2241	• The certificate has expired.
	2242	• The CA server rejected the connection.
	2243	• The connection to the server that checks for expiration of the certificate has timed out.
	2244	• Unable to check for expiration because the CRL size exceeds the maximum capacity that can be retained (1MB).
	2261	• The format of the certificate is invalid.
	2263	• Failed to initialize the certificate verification.
	2264	• Unable to perform verification because there are too many certificates to be verified (the maximum number of certificates that can be verified at a time is 20).
	2266	• Internal error of the certificate verification.
	2267	• The device certificate does not exist.
	2268	• No certificate is sent from the server.
WS scan	1	• The specified client is not registered.
	2	• Parameter is invalid.
	3	• The Web service or WS scan function is disabled.
	4	• The device is not connected to the network.
	5	• Waiting for connection from CP.
	6	• The certificate of the destination computer is not valid when the validity period of a certificate is checked.
	22	• Invalid argument.
	42	• The specified protocol is unavailable.
	52	• The connection aborted by the network.
	53	• The connection has been interrupted.
	55	• A buffer shortage occurred.
	57	• The socket is not connected.
	60	• The operation has timed out.
	70	• The operation is expected to be blocked.

Function	Code	Description
WS scan	72	• The RetrieveImage waiting period has timed out.
	2236	• The certificate has expired, or the validity period has not yet started.
	2238	• The CN field of the certificate does not match the server address.
	2239	• The certificate does not have the expected usage.
	2240	• The certificate is not trusted. • To trust the certificate, the certificate must be registered to the system.
	2241	• The certificate has expired.
	2242	• The CA server rejected the connection.
	2243	• The connection to the server that checks for expiration of the certificate has timed out.
	2244	• Unable to check for expiration because the CRL size exceeds the maximum capacity that can be retained (1MB).
	2261	• The format of the certificate is invalid.
	2263	• Although the environment is configured to use the HDD, it is unable to perform verification because the HDD path has not been specified.
	2264	• Unable to perform verification because there are too many certificates to be verified (the maximum number of certificates that can be verified at a time is 20).
	2265	• Parameter of the certificate verification is invalid.
	2266	• Internal error of the certificate verification.
	2267	• The device certificate does not exist.
	2268	• No certificate is sent from the server.

22. Open API Related Trouble

22.1 Outline

- Through the Certification Management System provided by OpenAPI, if error is found in communication between the machine and interacting applications developed by company other than KMBT, an error message is displayed.

22.2 Supported Version

- The Certification Management System provided by OpenAPI supports function version 3 of the machine.
  Confirm that Function Version is “version 3” from [Utility] → [Device Information] in the machine.

22.3 Types of Trouble

- The Certification Management System provided by OpenAPI certificates and manages communication between MFP and non-KMBT applications that run on the computer connected to the machine. If trouble is detected, the trouble message is displayed on the control panel of the machine or the screen of the computer on which the applications run. Trouble messages displayed on the control panel of the machine and actions are described below.

NOTE

- **A message that appears on the computer screen may be different depending on the appliaction being used for communication. The corresponding action may be different, so contact the application vendor for an appropriate action.**

<Examples of trouble messages>

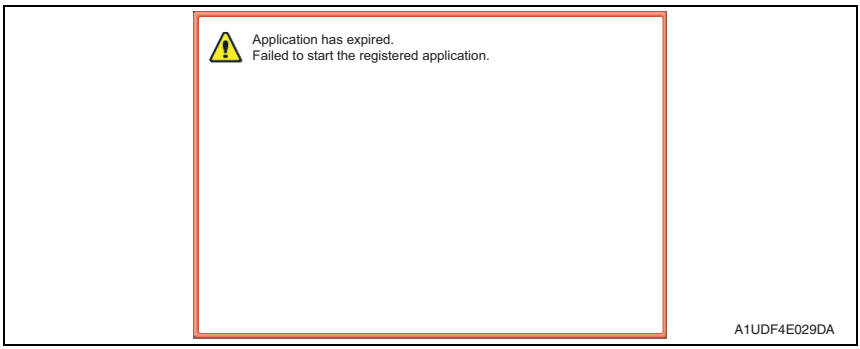

22.4 Solution

- The below describes the OpenAPI certification related trouble messages displayed on the control panel of the machine and actions, dividing them by possible situation.

A. When using an application

No.	Symptom and message	Action
1	When starting an application, the following message is displayed: Application has expired. Failed to start the registered application.	*1.* In [Administrator Settings] → [System Settings] → [Date/Time Settings], check that the date and time that is set is same as the actual date and time. If a wrong date and time is set, correct it. *2.* Contact the application vendor and obtain a new Solution Key (or the application software itself). Using it, perform the steps below. 1) Delete the application. 2) Using the Solution Key (or the application software itself), register the application again.
	When starting the machine, the following message is displayed: The Enhanced Server Authentication application has expired. Change the User Authentication method to one other than Enhanced Server Authentication.	
2	When starting an application, the following message is displayed: Failed to start the registered application. Please contact your service representative.	• In [System1] → [Marketing Area], change the marketing area of the machine to the one that was selected when the application was registered.
	When starting the machine, the following message is displayed: The enhanced server authentication application cannot be used. Please contact your service representative.	
3	In the screen saver application, after a time set, the screen saver does not work.	*1.* In [Administrator Settings] → [System Settings] → [Date/Time Settings], check that the date and time that is set is same as the actual date and time. If a wrong date and time is set, correct it. *2.* Contact the application vendor and obtain a new Solution Key (or the application software itself). Using it, perform the steps below. 1) Delete the application. 2) Using the Solution Key (or the application software itself), register the application again. *3.* In [System1] → [Marketing Area], change the marketing area of the machine to the one that was selected when the application was registered.

B. After rewriting the firmware of the machine

No.	Symptom and message	Action
1	When starting an application, the following message is displayed: Failed to start the registered application. Please contact your service representative.	• After deleting the application in question, register the application again.
	When starting the machine, the following message is displayed: The enhanced server authentication application cannot be used. Please contact your service representative.	
	In the screen saver application, after a time set, the screen saver does not work.	

23. POWER SUPPLY TROUBLE

23.1 Machine is not energized at all (DCPU operation check)

Relevant parts	
Main power switch (SW1) Printer control board (PRCB)	DC power supply (DCPU)

Step	Check item	WIRING DIAGRAM (Location)	Result	Action
1	Is a power voltage supplied across CN1-1, 3 on DCPU?	S-2	NO	Check the WIRING from the wall outlet to SW1 CN1.
2	Are the fuses on DCPU conducting?	—	NO	Change DCPU.
3	Is DC24 V being output from CN5-7, 8 on DCPU?	P-4	NO	Change DCPU.
4	Is DC5 V being input to CN4-5 to 7 on DCPU?	P-3	NO	Change DCPU.
5	Is DC5 V being input to CN2-3 on PRCB? (LED on PRCB does not blink.)	I-21	NO	Change DCPU.
			YES	Change PRCB.

23.2 Fusing heaters do not operate

Relevant parts	
Main power switch (SW1) Right door switch (SW2)	DC power supply (DCPU) Fusing unit

Step	Check item	WIRING DIAGRAM (Location)	Result	Action
1	Is the power source voltage applied across CN6-1, 6 on DCPU? During this time, the right door should be closed.	F-26	NO	Check wiring from power outlet to SW1 to DCPU to CN5 to SW2 to PRCB CN16.
2	Is the power source voltage applied across CN30-4 and 9?	D-26	YES	Fusing unit
			NO	Change DCPU.

23.3 Power is not supplied to option

23.3.1 DF-621

Step	Check item	WIRING DIAGRAM (Location)	Result	Action
1	Is DC24 V being output from CN90 on DF-621?	X-7	YES	Malfunction in DF-621
2	Is DC24 V being output from CN6-1 on DCPU?	P-5	NO	Check wiring from DCPU to DF-621.
3	Is the fuse on DCPU conducting?	—	YES	Change DCPU.
			NO	Malfunction in DF-621

23.3.2 PC-109/208/409

Step	Check item	WIRING DIAGRAM (Location)	Result	Action
1	Is DC24 V being applied to CN84-1?	L-25	NO	Malfunction in cabinet
2	Is DC24 V being output from CN6-3 on DCPU?	P-6	NO	Check wiring from DCPU to CN6 to cabinet.
3	Is the fuse on DCPU conducting?	—	YES	Change DCPU.
			NO	Malfunction in cabinet

23.3.3 FS-527/529

Step	Check item	WIRING DIAGRAM (Location)	Result	Action
1	Are DC24 V being applied to CN83L-1?	L-23	NO	Malfunction in finisher.
2	Are DC24 V being applied to CN6-2 on DCPU?	P-5	NO	Check wiring from DCPU to finisher.
3	Is the fuse on DCPU conducting?	—	YES	Change DCPU.
			NO	Malfunction in finisher.

24. IMAGE QUALITY PROBLEM

24.1 How to read element data

- As part of troubleshooting procedures, the numeric values set for “State Confirmation” available from “Service Mode” can be used to isolate the cause of the image problem.

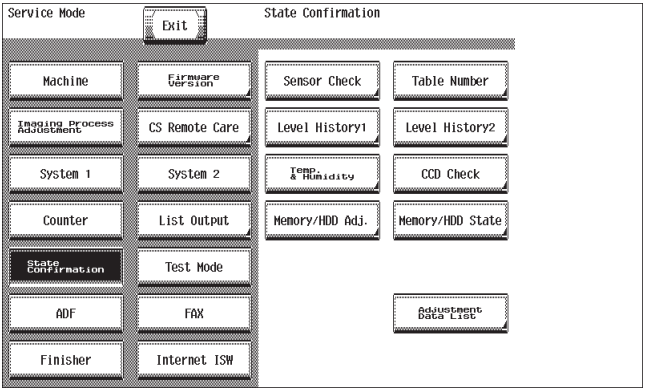

A1UDF4E022DA

24.1.1 Table number

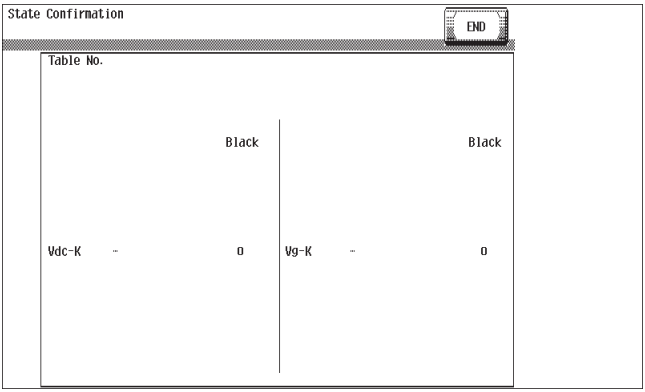

A1UDF4E023DA

Vdc-K	• Shows the developing bias value of toner when an image is produced. • Standard values: around 400 V (100 V to 750 V) • Relevant components: Developing unit, drum unit, high voltage unit (HV)
Vg-K	• Shows the grid voltage value of toner when an image is produced. • Standard values: around 500 V (200 V to 900 V) • Relevant components: Developing unit, drum unit, high voltage unit (HV)

24.1.2 Level history 1

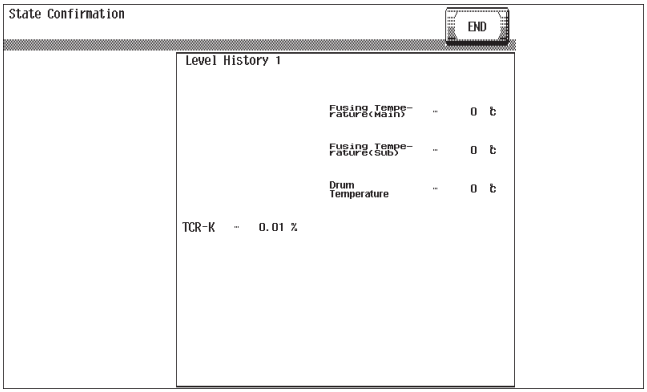

A1UDF4E024DA

TCR-K	• Shows the T/C ratio (in 0.01 % increments). • Standard value: 4 to 8 % • Relevant components: TCR sensor
Fusing temperature (Main) Fusing Temperature (Sub)	• Shows the temperature of the each part of the fusing unit (in 1 °C increments). • Relevant components: Fusing unit
Drum temperature	• Shows the temperature of the drum unit (in 1 °C increments). • Relevant components: Drum unit

24.1.3 Level history 2

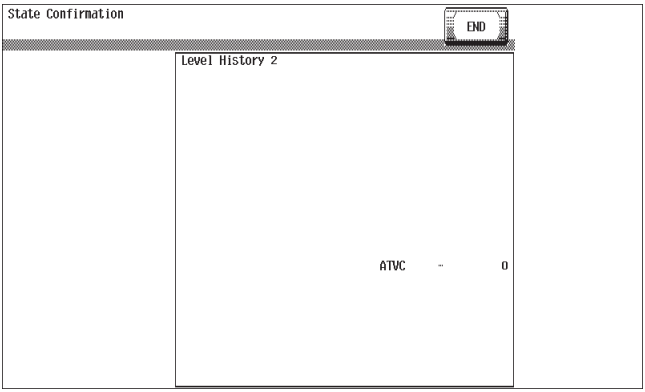

A1UDF4E025DA

ATVC	• Shows the latest ATVC level (which varies according to the paper type, environment or durability). • 300 V to 3800 V (ATVC) • Relevant components: High voltage unit (HV), transfer roller unit

24.2 How to identify problematic part

- This chapter is divided into two parts: “Initial check items” and “Troubleshooting procedure by a particular image quality problem.”
- When an image quality problem occurs, first go through the “Initial check items” and, if the cause is yet to be identified, go to “Troubleshooting procedure by a particular image quality problem.”

24.3 Initial check items

24.3.1 Initial check items 1

- Determine if the failure is attributable to a basic cause or causes.

Section	Step	Check Item	Result	Action
Paper	1	Recommended paper is used.	NO	Instruct user.
	2	Paper is damp.	YES	Replace paper. Instruct user on proper paper storage.
Original	3	Original not flat.	YES	Correct
	4	Faint original (light pencil, etc.)	YES	Instruct user.
	5	Highly transparent original (OHP film, etc.)	YES	Instruct user.
	6	Dirty or scratched original glass.	YES	Clean or Replace.
PM parts	7	PM parts relating to image formation have reached the end of cleaning/replacement cycles.	YES	Clean or Replace.
Adjustment items	8	There are settings that can be readjusted to remedy the image failure.	YES	Readjust.

24.3.2 Initial check items 2

- Determine if the failure is attributable to the Scanner system or the Printer system.

Check Item	Result	Cause
Make copies at different zoom ratios. A1UDF4C008DA	Full size Reduction 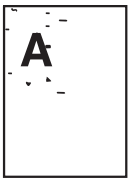 A1UDF4C009DA	Scanner system
	Full size Reduction 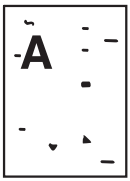 A1UDF4C010DA	Printer system

24.4 Solution

NOTE

- **Typical faulty image samples shown in the following are all printed with A3 setting.**

24.4.1 Scanner system: Blank copy or black copy

A. Typical faulty images

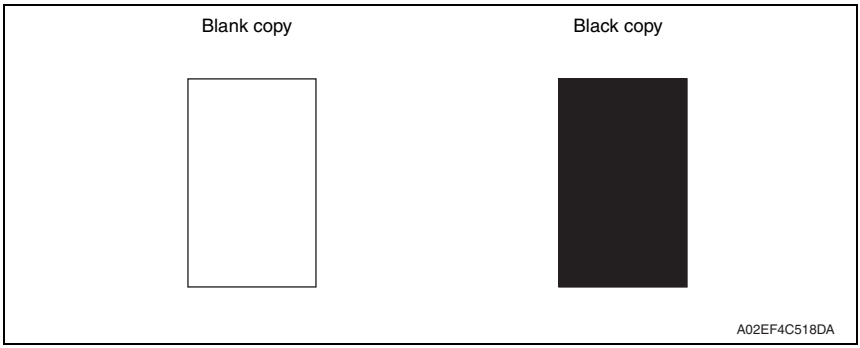

B. Troubleshooting procedure

Step	Section	Check Item	Result	Action
1	PWBs and connection cables	Connectors are securely connected with no bent pins and no breaks in the connection cables.	NO	Reconnect. Replace the connection cable.
2	Exposure unit	The exposure lamp comes on.	NO	Change exposure lamp. Change exposure unit.
3	Inverter board	Connectors on the inverter board are connected properly.	NO	Reconnect.
4		The problem has been eliminated after performing step 3.	NO	Change inverter board.
5	MFP board	Connectors on the MFP board are connected properly.	NO	Reconnect.
6		The problem has been eliminated after performing step 5.	NO	Change MFP board.
7	CCD unit	Connectors on the CCD board are connected properly.	NO	Reconnect.
8		The problem has been eliminated after performing step 7.	NO	Change CCD unit.

24.4.2 Scanner system: Low image density or rough image

A. Typical faulty images

A02EF4C516DA

B. Troubleshooting procedure

Step	Section	Check Item	Result	Action
1	Shading sheet	Shading sheet is dirty.	YES	Clean.
2	Mirrors/lens/ original glass	Mirrors, lens and/or original glass are dirty.	YES	Clean.
3	Exposure lamp	Exposure lamp is dirty.	YES	Clean. Change exposure lamp.
4	PWBs and connection cables	Connectors are securely connected with no bent pins and no breaks in the connection cables.	NO	Reconnect. Replace the connection cable.
5	MFP board	Connectors on the MFP board are connected properly.	NO	Reconnect.
6		The problem has been eliminated after performing step 5.	NO	Change MFP board.
7	CCD unit	Connectors on the CCD board are connected properly.	NO	Reconnect.
8		The problem has been eliminated after performing step 7.	NO	Change CCD unit.

24.4.3 Scanner System: Foggy background

A. Typical faulty images

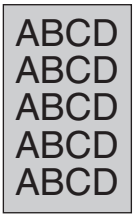

A02EF4C510DA

B. Troubleshooting procedure

Step	Section	Check Item	Result	Action
1	-	Sunlight or any other extraneous light enters the machine.	YES	Protect the copier from extraneous light.
2	Original	Original is damaged or dirty.	YES	Change original.
3	Original cover	Original pad is dirty.	YES	Clean.
4		Original cover does not lie flat.	YES	Replace original cover if it is deformed or the hinges are broken.
5	Shading sheet	Shading sheet is dirty.	YES	Clean.
6	Mirrors/lens/original glass/reflectors	Mirrors, lens, original glass and/or reflectors are dirty.	YES	Clean.
7	Exposure lamp	Exposure lamp is dirty.	YES	Clean. Change exposure lamp.
8	PWBs and connection cables	Connectors are securely connected with no bent pins and no breaks in the connection cables.	NO	Reconnect. Replace the connection cable.
9	MFP board	Connectors on the MFP board are connected properly.	NO	Reconnect.
10		The problem has been eliminated after performing step 9.	NO	Change MFP board.
11	CCD unit	Connectors on the CCD board are connected properly.	NO	Reconnect.
12		The problem has been eliminated after performing step 11.	NO	Change CCD unit.

24.4.4 Scanner system: Black streaks or bands

A. Typical faulty images

A1UDF4C011DA

B. Troubleshooting procedure

Step	Section	Check Item	Result	Action
1	Original	Original is damaged or dirty.	YES	Change original.
2	Original cover	Original pad is dirty.	YES	Clean.
3		Original cover does not lie flat.	YES	Replace original cover if it is deformed or the hinges are broken.
4	Shading sheet	Shading sheet is dirty.	YES	Clean.
5	Mirrors/lens/original glass/reflectors	Mirrors, lens, original glass and/or reflectors are dirty.	YES	Clean.
6	Exposure lamp	Exposure lamp is dirty.	YES	Clean. Change exposure lamp.
7	PWBs and connection cables	Connectors are securely connected with no bent pins and no breaks in the connection cables.	NO	Reconnect. Replace the connection cable.
8	MFP board	Connectors on the MFP board are connected properly.	NO	Reconnect.
9		The problem has been eliminated after performing step 8.	NO	Change MFP board.
10	CCD unit	Connectors on the CCD board are connected properly.	NO	Reconnect.
11		The problem has been eliminated after performing step 10.	NO	Change CCD unit.

24.4.5 Scanner system: Black spots

A. Typical faulty images

A02EF4C509DA

B. Troubleshooting procedure

Step	Section	Check Item	Result	Action
1	Original	Original is damaged or dirty.	YES	Change original.
2	Original cover	Original pad is dirty.	YES	Clean.
3	Original glass	Original glass is dirty.	YES	Clean.
4	-	The problem has been eliminated after performing step 3.	NO	Change exposure unit. Change CCD unit.

24.4.6 Scanner system: White streaks or bands

A. Typical faulty images

A1UDF4C012DA

B. Troubleshooting procedure

Step	Section	Check Item	Result	Action
1	Original	Original is damaged or dirty.	YES	Change original.
2	Original cover	Original pad is dirty.	YES	Clean.
3		Original cover does not lie flat.	YES	Replace original cover if it is deformed or the hinges are broken.
4	Shading sheet	Shading sheet is dirty.	YES	Clean.
5	Mirrors/lens/original glass/reflectors	Mirrors, lens, original glass and/or reflectors are dirty.	YES	Clean.
6	Exposure lamp	Exposure lamp is dirty.	YES	Clean. Change exposure lamp.
7		The white lines or bands are blurry or opaque.	YES	Change exposure unit. Change CCD unit.

24.4.7 Scanner system: Uneven pitch

A. Typical faulty images

A02EF4C525DA

B. Troubleshooting procedure

Step	Section	Check Item	Result	Action
1	Scanner motor	Scanner motor drive is being transmitted.	NO	Correct or change drive coupling mechanism.
2	Exposure lamp	Exposure lamp harness is not hooked.	NO	Correct.
3	Scanner drive cable	Scanner drive cable is taut.	NO	Correct the wiring or replace the cable.
4	Scanner rails	Scanner rails are scratched or dirty.	NO	Clean or change.
5	PWBs and connection cables	Connectors are securely connected with no bent pins and no breaks in the connection cables.	NO	Reconnect. Replace the connection cable.
6	MFP board	Connectors on the MFP board are connected properly.	NO	Reconnect.
7		The problem has been eliminated after performing step 6.	NO	Change MFP board.
8	CCD unit	Connectors on the CCD board are connected properly.	NO	Reconnect.
9		The problem has been eliminated after performing step 8.	NO	Change CCD unit.

24.4.8 Printer system: Blank copy or black copy

A. Typical faulty images

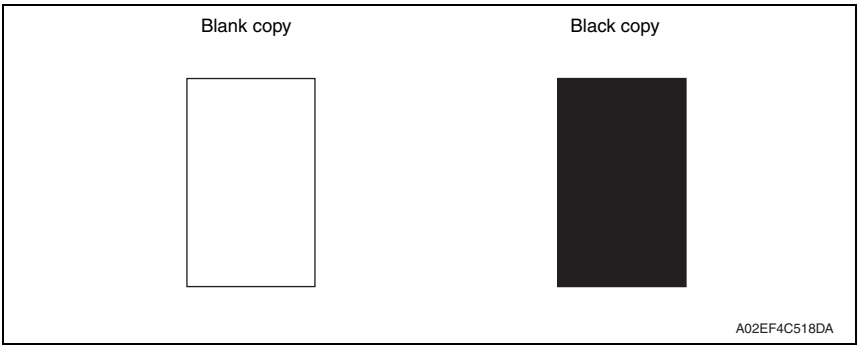

B. Troubleshooting procedure

Step	Section	Check Item	Result	Action
1	Imaging unit (blank copy)	Developing unit drive is being transmitted.	NO	Correct or change drive coupling mechanism.
2		Image transfer current contact terminal is dirty or deformed.	YES	Clean or correct.
3		Developing bias contact terminal is dirty or deformed.	YES	Clean or correct.
4	Imaging unit (black copy)	Drum unit charge contact terminal is dirty or deformed.	YES	Clean or correct.
5	PH unit	PH shutter (shutter in the path of the laser beam from the PH unit to the drum) opens and closes properly.	NO	Correct.
6	PWBs	Connectors are securely connected with no bent pins on the printer control board or PH Unit.	NO	Correct.
7	-	The problem has been eliminated after performing step 6.	NO	Change drum unit. Change PH unit. Change High voltage unit. Change printer control board.

24.4.9 Printer system: Low image density or rough image

A. Typical faulty images

A02EF4C516DA

B. Troubleshooting procedure

Step	Section	Check Item	Result	Action
1	Administrator Settings → Maximum Density Adjustment	Confirm the following setting is set to [lighter] side; [Administrator Settings] → [Expert Adjustment] → [Maximum Density Adjustment]	YES	Make setting again.
2	Imaging unit	The drum unit, developing unit, or the developer is used to the extent that its life value has been exceeded.	YES	Replace the unit whose life value has been reached.
3		Image transfer current contact terminal is dirty or deformed.	YES	Clean or correct.
4		Developing bias contact terminal is dirty or deformed.	YES	Clean or correct.
5	State Confirmation → Level History 1 (Service Mode)	Check TCR data. (specified rang: 4 to 8 %)	NO	Go to next step.
6	Level history data check results	Low TCR	YES	Go to step 8.
7		TCR falling within specified range	YES	Go to step 7.
8	PH unit	The surface of the PH window is dirty.	YES	Clean with cleaning jig.
9	Image Process Adjustment → TCR Toner Supply (Service Mode)	Toner is properly supplied when TCR toner supply is run.	NO	Go to next step.
10	Image Process Adjustment →Gradation Adjust (Service Mode)	Execute the Maximum Density Adjustment. “Conv. Value” falls within the specified range as checked through gradation adjust. Dark: 0 ± 100 Highlight: 0 ± 60	YES	Go to step 11.

11	Service Mode → Max Image Density Adj	Select [Service Mode] → [Image Process Adjustment] → [Max Image Density Adj]. The image problem can be corrected by selecting an Max Image Density Adj setting toward the + end.	YES	Make setting again.
12	-	The problem has been eliminated after performing step 11.	NO	Change drum unit. Change PH unit. Change high voltage unit. Change printer control board.

24.4.10 Printer system: Foggy background

A. Typical faulty images

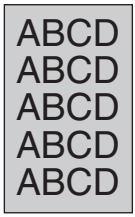

A02EF4C510DA

B. Troubleshooting procedure

Step	Section	Check Item	Result	Action
1	-	Sunlight or any other extraneous light enters the machine.	YES	Protect the copier from extraneous light.
2	Imaging Unit	The drum unit or the developer is used to the extent that its life value has been exceeded.	YES	Replace the unit whose life value has been reached.
4		Comb electrode contact terminal is dirty or deformed.	YES	Clean or correct.
5		Grid voltage contact terminal is dirty or deformed.	YES	Clean or correct.
7	Erase lamp	Erase lamp is dirty.	YES	Clean.
8		Is there continuity across the erase lamp?	NO	Change erase lamp.
9	Service Mode → Gradation Adjust	Select [Service Mode] → [Image Process Adjustment] → [Gradation Adjust]. The image problem can be corrected by executing the gradation adjustment.	YES	Make setting again.
10	Service Mode → Image Background Adj	Select [Service Mode] → [Image Process Adjustment] → [Image Background Adj]. The image problem can be corrected by selecting an Image Background Adj setting toward the + end.	YES	Make setting again.
11	-	The problem has been eliminated after performing step 10.	NO	Change drum unit. Change developing unit. Change PH unit. Change high voltage unit. Change printer control board.

24.4.11 Printer system: Black streaks or bands in sub scan direction

A. Typical faulty images

A1UDF4C011DA

B. Troubleshooting procedure

Step	Section	Check Item	Result	Action
1	Paper path	Toner is on the paper path.	YES	Clean.
2	Imaging unit	The drum unit or the developer is used to the extent that its life value has been exceeded.	YES	Replace the unit whose life value has been reached.
3		Drum is scratched.	YES	Change drum unit.
4		Appearance is dirty.	YES	Clean.
5	Fusing unit	Fusing rollers are dirty or scratched.	YES	Change fusing unit.
6	-	The problem has been eliminated after performing step 4.	NO	Change drum unit. Change developing unit. Change printer control board.

24.4.12 Printer system: Black streaks or bands in main scan direction

A. Typical faulty images

A1UDF4C026DA

B. Troubleshooting procedure

Step	Section	Check Item	Result	Action
1	Paper path	Toner is on the paper path.	YES	Clean.
2	Imaging unit	The drum unit or the developer is used to the extent that its life value has been exceeded.	YES	Replace the unit whose life value has been reached.
3		Drum is scratched.	YES	Change drum unit.
4		Appearance is dirty.	YES	Clean.
5	Transfer roller unit	Transfer roller is dirty or scratched.	YES	Change transfer roller unit.
6	Paper path	There is foreign matter on paper path.	YES	Remove foreign matter.
7		Image transfer paper separator fingers are damaged or dirty.	YES	Clean or change.
8	Fusing unit	Fusing rollers are dirty or scratched.	YES	Change fusing unit.
9	-	The problem has been eliminated after performing step 7.	NO	Change drum unit. Change developing unit. Change printer control board.

24.4.13 Printer system: Black spots

A. Typical faulty images

A02EF4C509DA

B. Troubleshooting procedure

Step	Section	Check Item	Result	Action
1	Paper path	Toner is on the paper path.	YES	Clean.
2	Imaging unit	Drum is scratched.	YES	Change drum unit.
3		Appearance is dirty.	YES	Clean.
4	Fusing unit	Fusing rollers are dirty or scratched.	YES	Change fusing unit.
5	Imaging unit	Comb electrode contact terminal is dirty or deformed.	YES	Clean or correct.
6		Grid voltage contact terminal is dirty or deformed.	YES	Clean or correct.
7	Erase lamp	Erase lamp is dirty.	YES	Clean.
8		Is there continuity across the erase lamp?	NO	Change erase lamp.
9	-	The problem has been eliminated after performing step 8.	NO	Change drum unit. Change developing unit. Change high voltage unit. Change printer control board.

24.4.14 Printer system: White streaks or bands in sub scan direction

A. Typical faulty images

A1UDF4C012DA

B. Troubleshooting procedure

Step	Section	Check Item	Result	Action
1	Transfer roller unit	Transfer roller is dented or scratched.	YES	Change transfer roller unit.
2	-	The drum unit, developing unit, paper dust remover or the transfer roller unit is used to the extent that its life value has been exceeded.	YES	Replace the unit whose life value has been reached.
3	Imaging unit	Drum is scratched.	YES	Change drum unit.
4		Appearance is dirty.	YES	Clean.
5	Fusing unit	Fusing rollers are dirty or scratched.	YES	Change fusing unit.
6	PH unit	Window glass of the PH unit is dirty.	YES	Clean.
7	-	The problem has been eliminated after performing step 6.	NO	Change drum unit. Change developing unit. Change printer control board.

24.4.15 Printer system: White streaks or bands in main scan direction

A. Typical faulty images

A1UDF4C027DA

B. Troubleshooting procedure

Step	Section	Check Item	Result	Action
1	-	The drum unit, developing unit, paper dust remover or the transfer roller unit is used to the extent that its life value has been exceeded.	YES	Replace the unit whose life value has been reached.
2	Imaging unit	Drum is scratched.	YES	Change drum unit.
3		Appearance is dirty.	YES	Clean.
4	Transfer roller unit	Transfer roller is dirty or scratched.	YES	Change transfer roller unit.
5	Paper path	There is foreign matter on paper path.	YES	Remove foreign matter.
6		Image transfer paper separator fingers are damaged or dirty.	YES	Clean or change.
7	Fusing unit	Fusing rollers are dirty or scratched.	YES	Change fusing unit.
8	PH unit	Window glass of the PH unit is dirty.	YES	Clean.
9	-	The problem has been eliminated after performing step 8.	NO	Change drum unit. Change developing unit. Change printer control board.

24.4.16 Printer system: Void areas

A. Typical faulty images

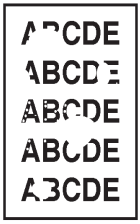

A1UDF4C013DA

B. Troubleshooting procedure

Step	Section	Check Item	Result	Action
1	-	The developing unit, paper dust remover or the transfer roller unit is used to the extent that its life value has been exceeded.	YES	Replace the unit whose life value has been reached.
2	Imaging unit	Drum is scratched.	YES	Change drum unit.
3		Appearance is dirty.	YES	Clean.
4	Transfer roller unit	Transfer roller is dented or scratched.	NO	Change transfer roller unit.
5	Fusing unit	Fusing rollers are scratched or deformed.	YES	Change fusing unit.
6	-	The problem has been eliminated after performing step 5.	NO	Change drum unit. Change developing unit. Change printer control board.

24.4.17 Printer system: Smears on back of paper

A. Typical faulty images

A02EF4C530DA

B. Troubleshooting procedure

Step	Section	Check Item	Result	Action
1	Paper path	Toner is on the paper path.	YES	Clean.
2	Transfer roller unit	Transfer roller is dirty.	YES	Change transfer roller unit.
3	Fusing unit	Fusing roller is dirty.	YES	Change fusing unit.

24.4.18 Printer system: Uneven image density

A. Typical faulty images

A02EF4C521DA

B. Troubleshooting procedure

Step	Section	Check Item	Result	Action
1	Imaging unit	The drum unit, developing unit, or the developer is used to the extent that its life value has been exceeded.	YES	Replace the unit whose life value has been reached.
2	Transfer roller unit	The transfer roller unit is used to the extent that its life value has been exceeded.	YES	Change transfer roller unit.
3		Transfer roller is dirty or deformed.	YES	
4	-	The problem has been eliminated after performing step 1.	NO	Change drum unit. Change developing unit. Change printer control board.

24.4.19 Printer system: Gradation reproduction failure

A. Typical faulty images

A02EF4C522DA

B. Troubleshooting procedure

Step	Section	Check Item	Result	Action
1	Administrator Settings → Maximum Density Adjustment	Confirm the following setting is set to [lighter] or [Darker] side; [Administrator Settings] → [Expert Adjustment] → [Maximum Density Adjustment]	YES	Make setting again.
2	-	The developing unit or the developer is used to the extent that its life value has been exceeded.	YES	Replace the unit whose life value has been reached.
3	State Confirmation → Level History 1 (Service Mode)	Check TCR data. (specified rang: 4 to 8 %)	NO	Go to next step.
4	Level history data check results	Low TCR	YES	Go to step 6.
5		High TCR or TCR falling within specified range	YES	Go to step 7.
6	Image Process Adjustment → TCR Toner Supply (Service Mode)	Toner is properly supplied when TCR toner supply is run.	NO	Go to next step.
7	Image Process Adjustment →Gradation Adjust (Service Mode)	Execute the Maximum Density Adjustment. “Conv. Value” falls within the specified range as checked through gradation adjust. Dark: 0 ± 100 Highlight: 0 ± 60	YES	Go to next step.
8	Transfer roller unit	Transfer roller is dirty or deformed.	YES	Change transfer roller unit.
9	-	The problem has been eliminated after performing step 8.	NO	Change drum unit. Change developing unit. Change printer control board.

24.4.20 Printer system: Uneven pitch

A. Typical faulty images

A02EF4C525DA

B. Troubleshooting procedure

Step	Section	Check Item	Result	Action
1	Imaging unit	The developing unit or the developer is used to the extent that its life value has been exceeded.	YES	Replace the unit whose life value has been reached.
2		Developing unit drive is being transmitted.	NO	Correct or change drive coupling mechanism.
3		Drum and transfer roller drive is being transmitted.	NO	Correct or change drive coupling mechanism.
4	Transport section	Registration roller unit drive is being transmitted.	NO	Correct or change drive coupling mechanism.
5	Fusing Section	Fusing unit drive is being transmitted.	NO	Correct or change drive coupling mechanism.
6	Imaging unit	Ds collar is dirty.	YES	Clean.
7	PH unit	PH unit is securely installed.	YES	Correct.
8	-	The problem has been eliminated after performing step 7.	NO	Change drum unit. Change developing unit. Change printer control board.

25. IC protector

25.1 Outline

- To increase product safety, this MFP has an IC protector (ICP) installed in each board. ICP is a component that protects IC. If the amount of the current supplied to the electrical parts such as motor exceeds the set level, ICP trips to protect IC from over current. The following list contains ICP installed in each board, related devices, and symptoms that occur when ICP trips.

25.2 IC protector list

25.2.1 Main body

A. Printer control board

ICP No.	Symbol	Target part name	When ICP trips	
			Symptom in each load	Trouble code and others
ICP6	FM2	Cooling fan motor	Cooling fan motor's failure to turn	C5356

25.2.2 DF-621

A. DF control board

ICP No.	Symbol	Target part name	When ICP trips	
			Symptom in each load	Trouble code and others
F1	M4	Glass cleaning motor	Glass cleaning mechanism trouble	C8107
F2	M2	Document feed motor	ADF paper feed section JAM	-
F3	-	DC to DC converter input section 24V line	Unable to produce DC5V in ADF and MFP unable to detect ADF	-
F4	PS3	Document registration sensor	ADF image reading section JAM	-
	PS4	Reading roller sensor		-
F5	M1	Document reading motor	ADF image reading section JAM	-
F6	SD2	Stamp solenoid	Unable to place a stamp	-
	SD1	Document exit roller release solenoid	ADF turnover section JAM	-
F7	FM1	DF cooling fan motor	Cooling fan trouble	C8302
F8	M3	Reading roller release motor	Before reading pressure welding alienation mechanism trouble	C8101
F9	CL1	Document feed clutch	ADF paper feed section JAM	-
	CL2	Document registration clutch		-

25.2.3 PC-109/PC-208

A. PC Control board

ICP No.	Symbol	Target part name	When ICP trips	
			Symptom in each load	Trouble code and others
ICP1	M31 M41	Tray 3 paper feed motor Tray 4 paper feed motor	Paper feed drive malfunction, paper feed JAM	—
ICP2	M42	Tray 4 vertical transport motor	Paper feed drive malfunction, paper feed JAM	—
ICP3	M32	Tray 3 vertical transport motor	Paper feed drive malfunction, paper feed JAM	—
ICP5	-	DC to DC converter for 5V power supply	Unable to be detected	—
ICP6	M33 M43	Tray 3 lift-up motor Tray 4 lift-up motor	Lift up mechanism failure	C0206 C0208

25.2.4 PC-409

A. PC Control board

ICP No.	Symbol	Target part name	When ICP trips	
			Symptom in each load	Trouble code and others
ICP1	M51	Paper feed motor	Paper feed drive malfunction, paper feed JAM	—
ICP2	M52	Vertical transport motor	Paper feed drive malfunction, paper feed JAM	—
ICP3	M53	Division board position motor	Paper feed drive malfunction, Division board position motor mal-function	C0213
ICP4	M54	Shift motor	Paper feed drive malfunction, Shift motor malfunction	C0214, C0215
ICP5	M55	Elevator motor	Paper feed drive malfunction, Eleva-tor motor malfunction	C0209, C0210
ICP6	-	DC to DC converter for 5V power supply	Unable to be detected	—

25.2.5 JS-505

A. JS control board

ICP No.	Symbol	Target part name	When ICP trips	
			Symptom in each load	Trouble code and others
F1	—	FN main power switch	Unable to supply 24V to FN and MFP unable to detect FN	C1004
F2	—	DC to DC converter input section 24 V line	Unable to produce DC5V in FN and MFP unable to detect FN	C1004
F3	CL1	Roller pressure/retraction clutch	Exit roller pressure/ retraction malfunction	C11A1
F4	T1FDT B/LED	Lower tray paper full detect board/PR	Continuous tray 1 full detection	—
	T2FDT B/LED	Upper tray paper full detect board/PR	Continuous tray 2 full detection	
F6	M2	Shift motor	Shift motor drive failure	C1182
F7	M1	Transport motor	Transport section JAM	—

25.2.6 FS-527

A. FS control board

ICP No.	Symbol	Target part name	When ICP trips	
			Symptom in each load	Trouble code and others
F1	—	Between connection with MFP and 24V power line	No operation (Due to no power supply to CPU, FS connection not detected)	—
F3	—	24V to 5V DC to DC converter		—
F4	—	5V to 3.3V DC to DC converter		—
F5	M1	Paper passage motor/1	JAM between MFP and the paper receiving section	—
F6	M3	Paper passage motor/2	JAM between RU and the intermediate section	—
F7	M4	Conveyance motor	JAM between the intermediate and lower path sections	—
F8	M5	Exit motor	JAM or multiple sheets/sets ejection JAM between the accommodation and exit sections.	—
F9	M11	Stapler movement motor	Stapler movement drive failure	C11B0
F10	M13	Alignment plate motor	Alignment plate motor drive malfunction	C1190
F11	M14	Leading edge stopper motor	Leading edge stopper motor drive malfunction	C1194
F12	SD1	Accommodation paddle solenoid	Accommodation section JAM	—
F13	M16	Tray 2 shift motor	Shift motor drive failure	C1182
F14	M2	Duplex path switching motor	Duplex path switching motor drive malfunction (Paper may be fed in the mode where this motor does not operate)	C11E0

ICP No.	Sym-bol	Target part name	When ICP trips	
			Symptom in each load	Trouble code and others
F15	M6	Upper lower path switching motor	Upper lower path switching motor drive malfunction (Paper may be fed when no finishing options are selected.)	C11E1
F16	M8	Tray 1 path switching motor	Tray 1 path switching motor drive malfunction (Paper may be fed when it is not ejected to the tray 1.)	C11E2
F17	M17	Tray 3 exit roller retraction motor	Tray 3 exit roller pressure/ retraction failure (Only when JS is installed)	C11A7
F18	M9	Exit roller retraction motor	Tray 2 exit roller pressure/ retraction failure	C11A1
F19	M10	Accommodation roller retraction motor	Accommodation roller pressure/ retraction failure	C11A2
F20	M100	Punch motor/1	Punch motor drive malfunction (Only during the initial operation or the punch operation in punch mode)	C11C0
F21	M18	Stapler motor	Staple drive failure (Paper may be fed when stapling is not selected)	C11B2
F22	M15	Elevate motor	Elevate drive malfunction	C1183
F23	M12	Accommodation paddle motor	Accommodation section JAM (Depending on conditions, paper may be ejected when no finishing options are selected.)	—
F25	M15	Elevate motor	Elevate drive malfunction	C1183
F26	PS200	Punch cam position sensor	Punch motor drive malfunction	C11C0
	PS300	Punch pulse sensor/1		
	PS100	Punch home sensor/1		
F27	—	Stapler home sensor	Staple drive failure (Likely to staple repeatedly depending on conditions)	C11B2
	—	Stapler self-priming sensor		
	—	Staple empty sensor		
F29	PS1	Paper passage sensor/1	JAM	—
	PS2	Paper passage sensor/2		
	PS10	Registration sensor		
	PS30	Punch hole full sensor		
F30	PS9	Lower path sensor	JAM	—
	PS16	Tray 2 paper detection sensor		

25.2.7 SD-509

A. SD drive board

ICP No.	Symbol	Target part name	When ICP trips	
			Symptom in each load	Trouble code and others
F1	PS43	Paper detection sensor/1	Saddle section JAM	—
	PS44	Paper detection sensor/2		
F2	—	24V to 5V DC to DC converter	No operation (Due to no power supply to CPU, SD connection is not detected)	—
F3	M24	Center staple alignment motor/F	Center-staple front adjust drive motor malfunction	C1114
F4	M23	Center staple alignment motor/R	Center-staple rear adjust drive motor malfunction	C1150
F5	M20	Leading edge stopper motor	Center-staple lead edge stopper motor malfunction	C1113
F7	M26	Center fold plate motor	Center-staple knife drive motor malfunction	C1115
F8	—	Saddle stapler	Saddle stapler drive failure	C11B5
F9	SD3	Leading edge grip solenoid	Misalignment, misalignment of sheets in a copy set, and misaligned saddle stitch and fold positions	—
F10	—	Stapler home sensor	Center-stapler drive failure or staple empty indication	C11B5
	—	Staple empty sensor 1		
	—	Staple empty sensor 2		
F11	M25	Center fold roller motor	Center-staple transfer motor malfunction	C1116
F12	M25	Center fold roller motor	Center-staple transfer motor malfunction	C1116
F13	M21	Upper paddle motor	Center-staple paddle roller motor malfunction (trailing edge)	C1156
F14	M22	Lower paddle motor	Center-staple paddle roller motor malfunction (Leading edge)	C1158

25.2.8 FS-529

A. FS control board

ICP No.	Symbol	Target part name	When ICP trips	
			Symptom in each load	Trouble code and others
R1	—	24V to 5V DC to DC converter	Not functioning	—
CP1	—	24V to 3.3V DC to DC converter	Not functioning	—
	PS1	Paper passage sensor/1		—
	PS2	Paper surface detect sensor/1		—
	PS3	Paper surface detect sensor/2		—
	PS4	Tray up/down operation sensor		—
	PS6	Tray lower limit sensor		—
	PS7	Paper empty sensor		—
	PS8	Alignment plate home sensor/F		—
	PS9	Alignment plate home sensor/R		—
	PS10	Paper passage sensor/2		—
	PS11	Stapler home sensor		—
	PS12	Pick up roller position sensor		—
	PS13	Belt position sensor		—
	PS14	Leading edge stopper home sensor		—
	—	Staple home position sensor		—
	—	Staple self prime sensor		—
	—	Staple empty sensor		—
CP2	PS1	Paper passage sensor/1	Not functioning	—
	PS2	Paper surface detect sensor/1		—
	PS3	Paper surface detect sensor/2		—
	PS4	Tray up/down operation sensor		—
	PS6	Tray lower limit sensor		—
	PS7	Paper empty sensor		—
	PS8	Alignment plate home sensor/F		—
	PS9	Alignment plate home sensor/R		—
	PS10	Paper passage sensor/2		—
	PS11	Stapler home sensor		—
	PS12	Pick up roller position sensor		—
	PS13	Belt position sensor		—
	PS14	Leading edge stopper home sensor		—
CP3	M1	Pick up roller position motor	Exit roller pressure/ retraction malfunction	C11A1
CP10	M1	Pick up roller position motor	Exit roller pressure/ retraction malfunction	C11A1
CP4	M3	Alignment motor/F	Alignment plate F drive malfunction	C1191

ICP No.	Symbol	Target part name	When ICP trips	
			Symptom in each load	Trouble code and others
CP5	M2	Tray up/down motor	Elevate drive malfunction	C1183
CP6	M4	Alignment motor/R	Alignment plate R drive malfunction	C1190
CP7	SD3	Alignment stopper solenoid	Leading edge stopper motor drive malfunction	C1194
CP12	SD2	Paddle solenoid	Paper exit failure, JAM	—
CP15	SD1	Paper surface detect solenoid	Elevate drive malfunction	C1183
F2	SW1	Front door switch	“There is an open component.” appears.	—
CP8	M5	Conveyance motor/1	Conveyance JAM	—
CP9	M6	Conveyance motor/2	Conveyance JAM	—
CP17	M7	Stapler movement motor	Stapler movement drive malfunction	C11B0
CP19	SD5	Belt retract solenoid	Belt movement malfunction	C1181
	FM1	Fan motor	Fan motor drive malfunction	C1301
CP20	SD4	Flapper solenoid	JAM upon duplex printing	—
F1	M8	Stapler motor	Staple drive malfunction	C11B2

26. TROUBLESHOOTING OF i-Option

26.1 Outline

26.1.1 Structure of license management

- The functions available with i-Option can be activated by entering “License code” to the MFP.
- License code is issued and controlled by License Management System (LMS).
  To prevent unauthorized use of the license code, each MFP is identified individually so that the license code cannot be activated unless it matches with the authorized MFP.

26.1.2 License management information

- Since license code needs to identify each MFP, it is issued using the serial number of MFP and “unique value” that is generated inside MFP.
- The “unique value” is stored to the NVRAM board (NRB) on the MFP board and at the same time some parts of it are memorized by EEPROM (IC51). The activated function cannot be used unless the both figures conform.
  Since these figures are out of target of NVRAM data back, when any trouble occurs at either nonvolatile memory or either of them is replaced with new one, “license management error” is generated due to discordance of the figures.

26.2 Error message

26.2.1 License management error

- When abnormal value is detected in the license management information that is stored to the NVRAM board (NRB) or EEPROM (IC51), or some values are detected cleared, warning is issued to let the user know the abnormality.
- The abnormality is detected at the timing of start-up or restart due to any condition.
- When the abnormality is detected, the corresponding i-Option function cannot be used, other ordinal functions, however, such as copy, scanning, print or etc, can be used without interruption.

A. Example of error message

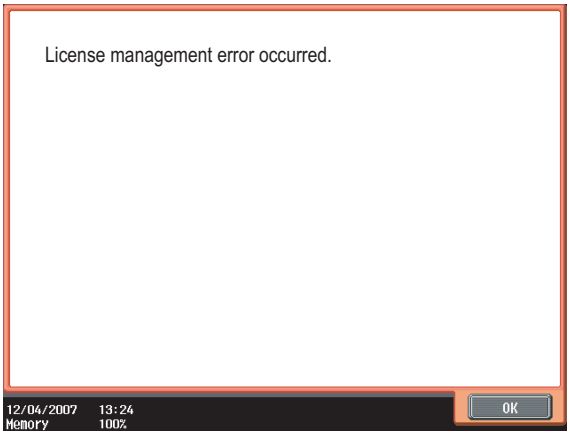

A0PDF4E502DA

B. Main reasons of trouble

- The following shows the possible trouble factors and their countermeasure.

Board replacement	Countermeasure
• When NVRAM board (NRB) on MFP board is replaced with new one.	Repair ⇒ Activation
• When EEPROM (IC51) is replaced with new one.	Repair
• When NVRAM board (NRB) and EEPROM (IC51) are replaced with the new ones at the same time.	Initialize ⇒ Activation
• When mounting the NVRAM board (NRB) of the machine whose function(s) have already been activated.	Initialize ⇒ Activation
• When mounting the EEPROM (IC51) of the machine whose function(s) have already been activated.	Initialize ⇒ Activation
• When mounting the NVRAM board (NRB) and the EEPROM (IC51) of the machine whose function(s) have already been activated.	Initialize ⇒ Activation

APPENDIX

27. PARTS LAYOUT DRAWING

27.1 Main body

27.1.1 Scanner section

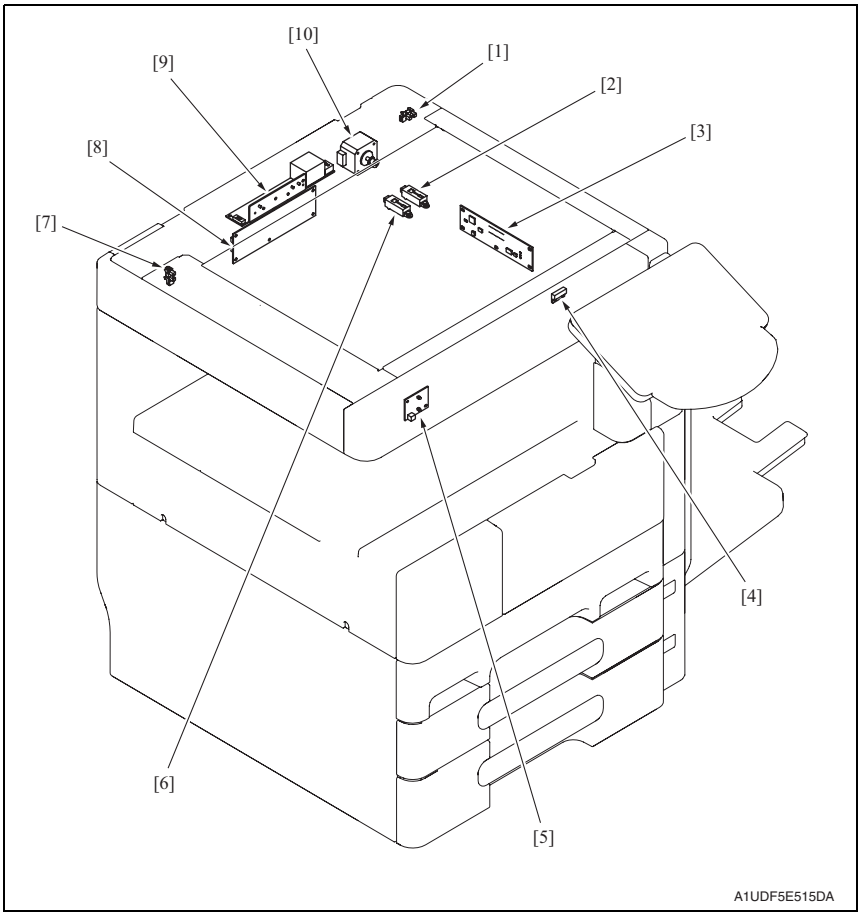

[1]	Angle sensor (PS202)	[2]	Original size detection sensor/1 (PS204)
[3]	CCD board (CCSB)	[4]	Original cover switch (RS201)
[5]	Machine condition monitor board (MCMB)	[6]	Original size detection sensor/2 (PS205)
[7]	Scanner home sensor (PS201)	[8]	Scanner relay board (REYB/SCAN)
[9]	Inverter board (INVB)	[10]	Scanner motor (M201)

27.1.2 Front side

A. Board/switch/sensor/others

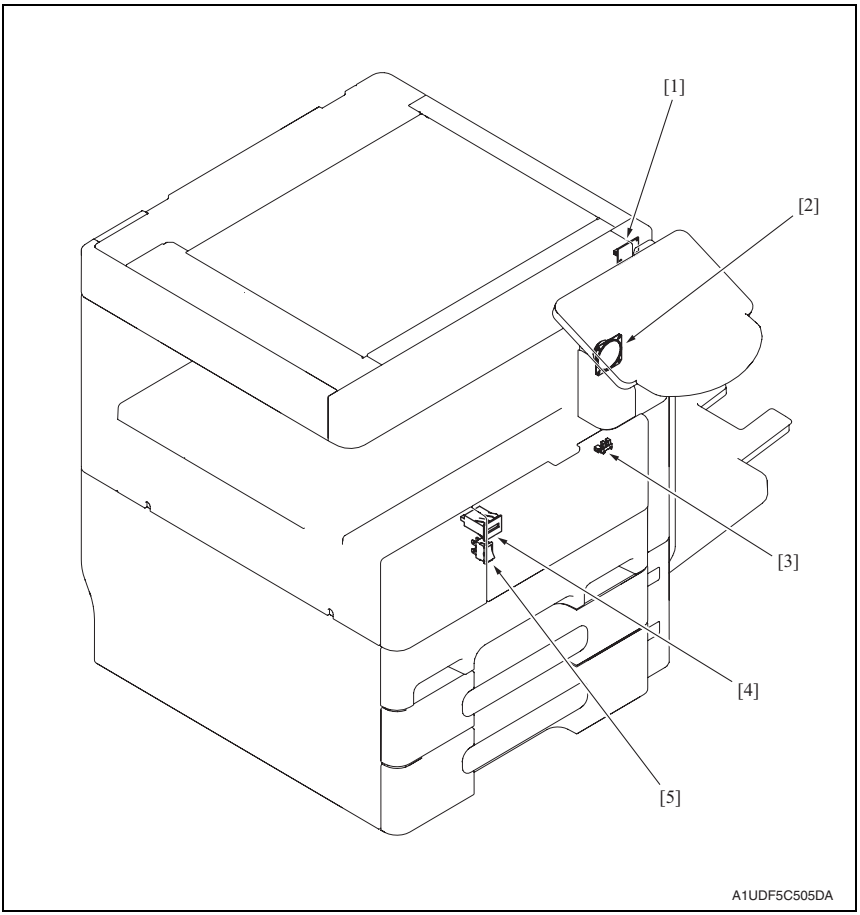

[1]	USB board (USBB)	[2]	Fax speaker (SP1)
[3]	Front door sensor (PS5)	[4]	Total counter (CNT)
[5]	Main power switch (SW1)		

27.1.3 Back side

A. Load/sensor/switch

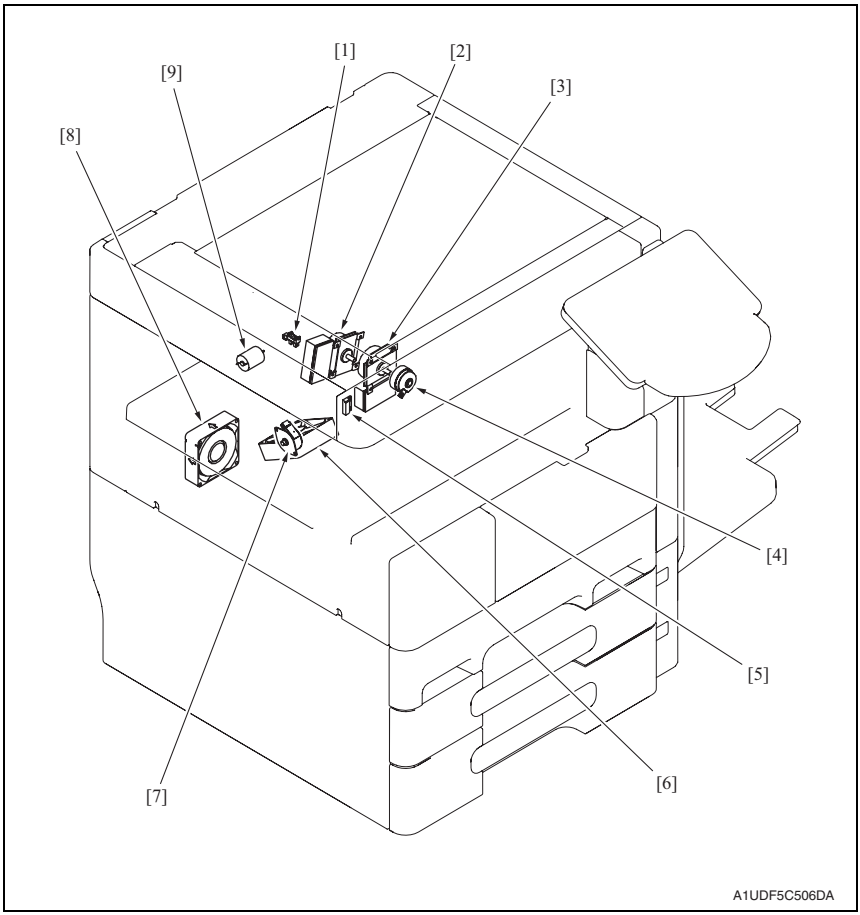

[1]	Toner bottle home sensor (PS4)	[2]	PC motor (M2)
[3]	Transport motor (M1)	[4]	Registration clutch (CL1)
[5]	Toner near empty switch (RS1)	[6]	MFP board cooling fan motor (FM5)
[7]	Toner supply motor (M4)	[8]	Toner suction fan motor (FM4)
[9]	Toner bottle motor (M3)		

B. Board

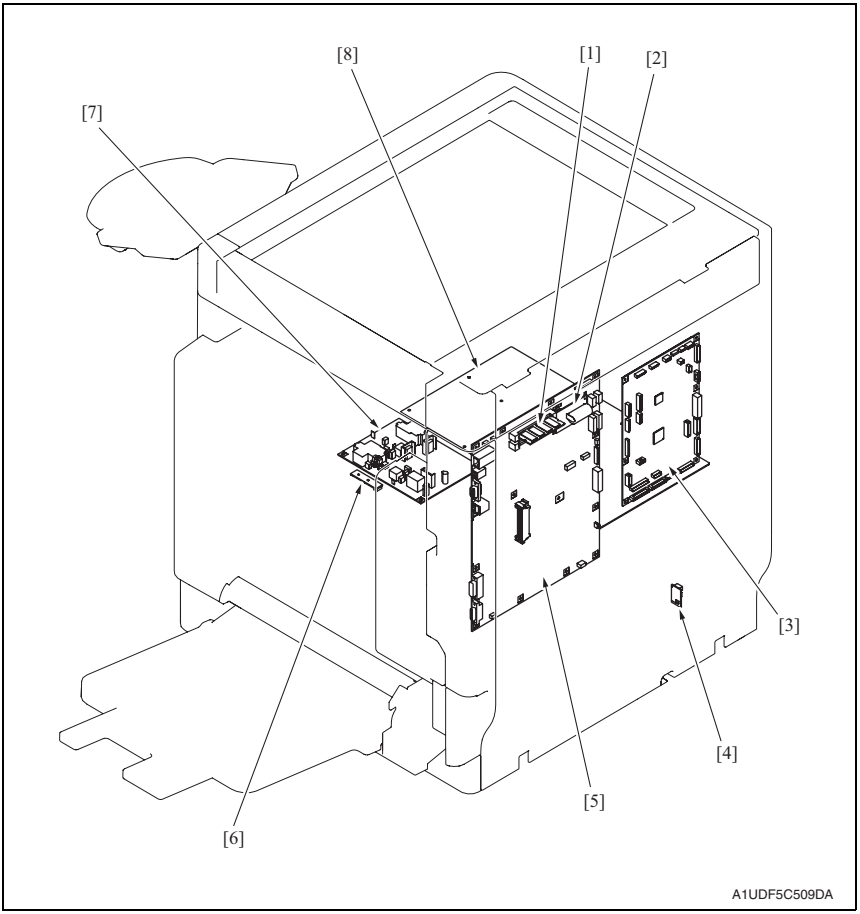

[1]	SO DIMM (DIMM)	[2]	NVRAM board (NRB)
[3]	Printer control board (PRCB)	[4]	Temperature/humidity sensor (TEM/HUM)
[5]	MFP board (MFPB)	[6]	TCR sensor board (TCRSB)
[7]	High voltage unit (HV1)	[8]	DC power supply (DCPU)

27.1.4 Left side

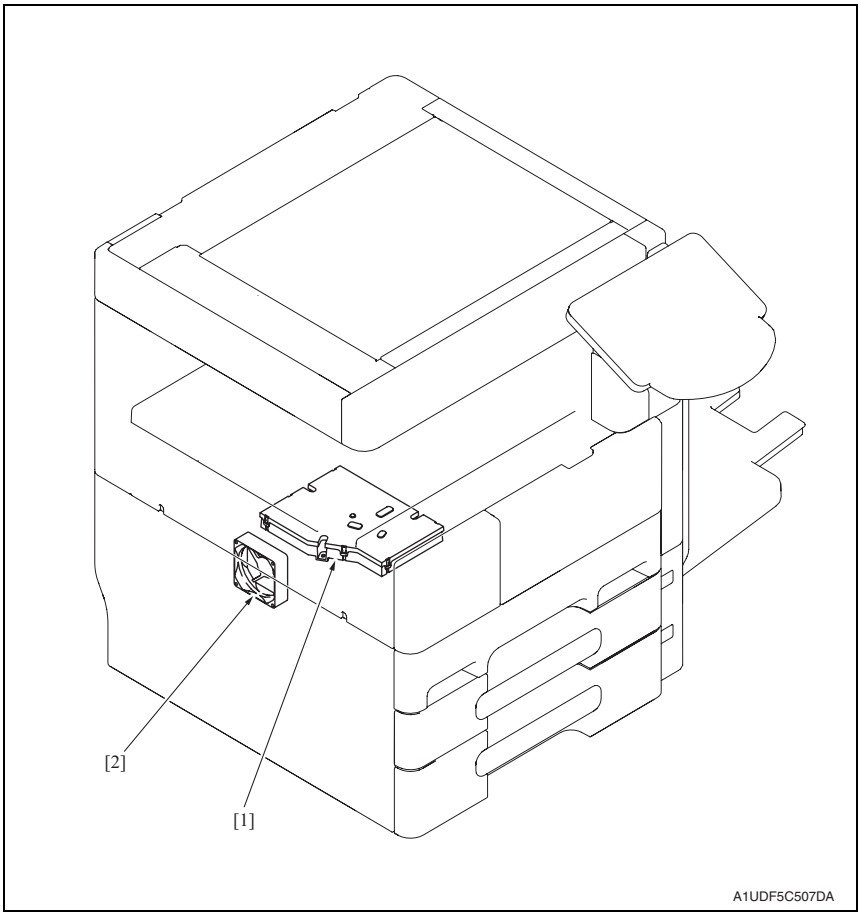

[1] PH unit

[2] Power supply cooling fan motor (FM1)

27.1.5 Right side

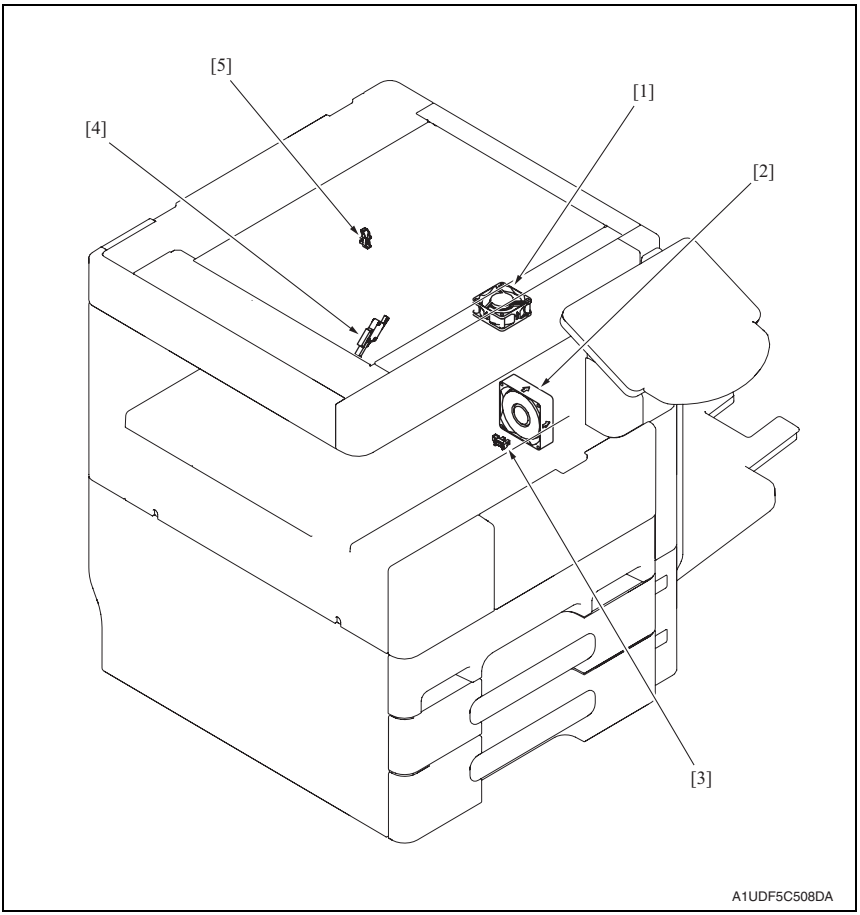

[1] Fusing unit cooling fan motor (FM3)
[2] Cooling fan motor (FM2)
[3] Registration sensor (PS1)
[4] Right lower door switch (SW2)
[5] Service port cover sensor (PS6)

27.1.6 Duplex/Switchback/Fusing section

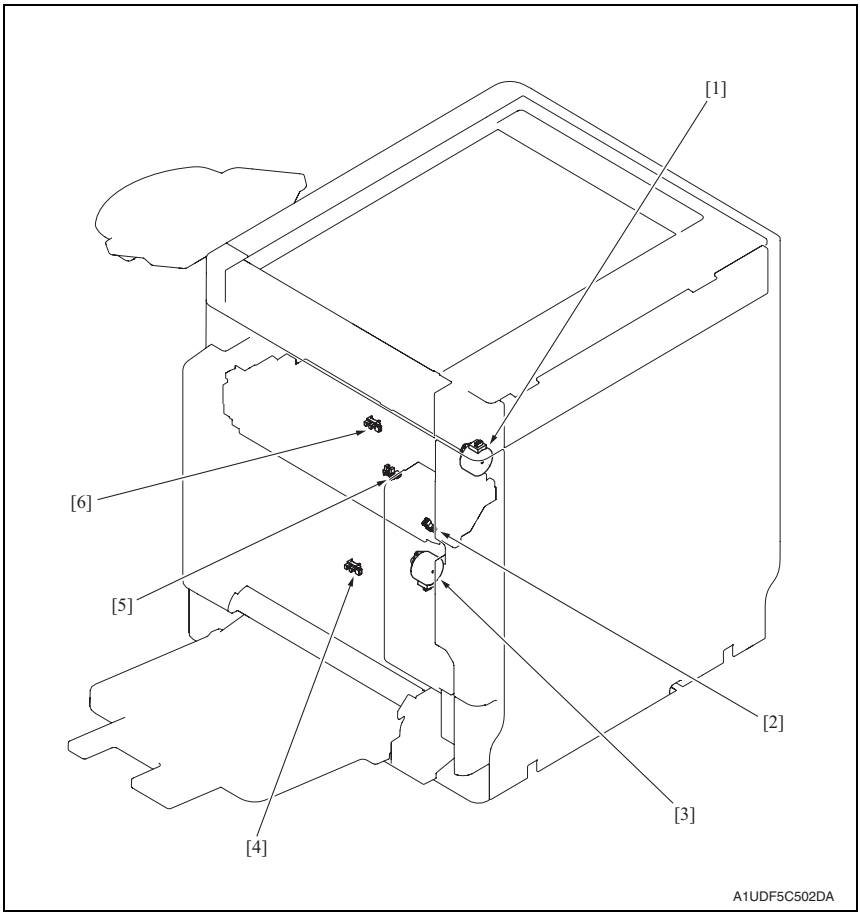

[1]	Switchback motor (M91)	[2]	Duplex unit upper transport sensor (PS92)
[3]	Duplex transport motor (M92)	[4]	Duplex unit lower transport sensor (PS93)
[5]	Duplex unit door sensor (PS91)	[6]	Paper exit sensor (PS3)

27.1.7 Manual bypass tray

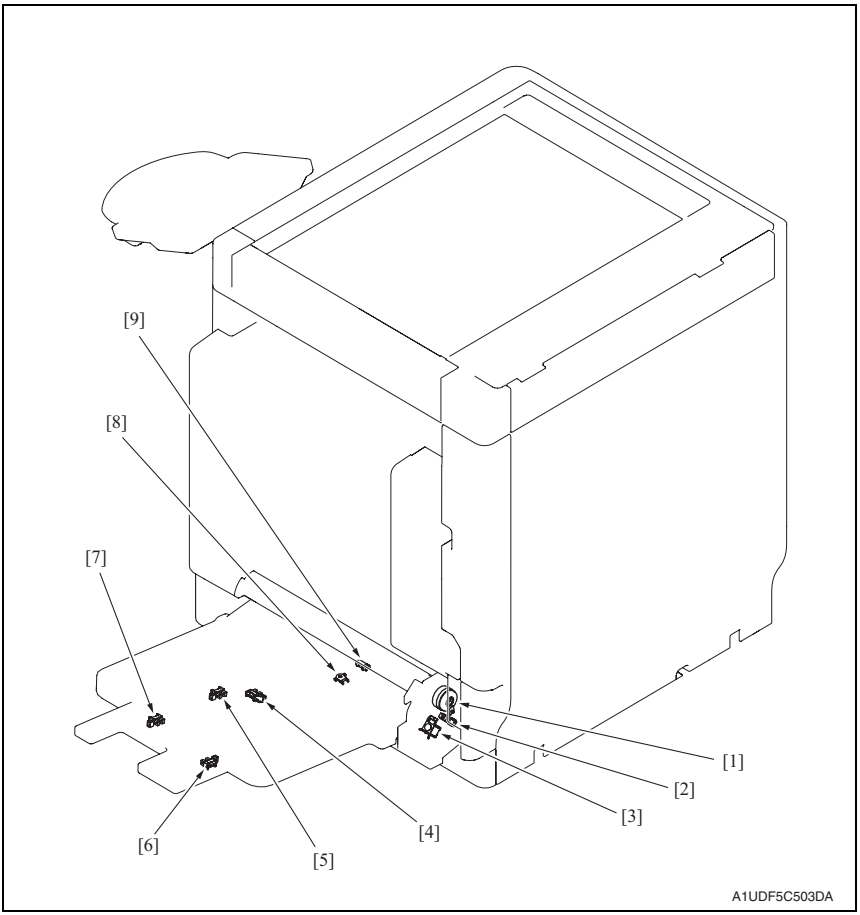

[1]	Manual paper feed clutch (CL81)	[2]	Manual lift-up position sensor (PS83)
[3]	Manual pick-up solenoid (SD81)	[4]	Manual paper empty sensor (PS82)
[5]	Manual multi FD sensor /1 (PS84)	[6]	Manual multi FD sensor /3 (PS86)
[7]	Manual multi FD sensor /2 (PS85)	[8]	Manual FD size sensor (VR81)
[9]	Manual paper detection sensor (PS81)		

27.1.8 Tray 1

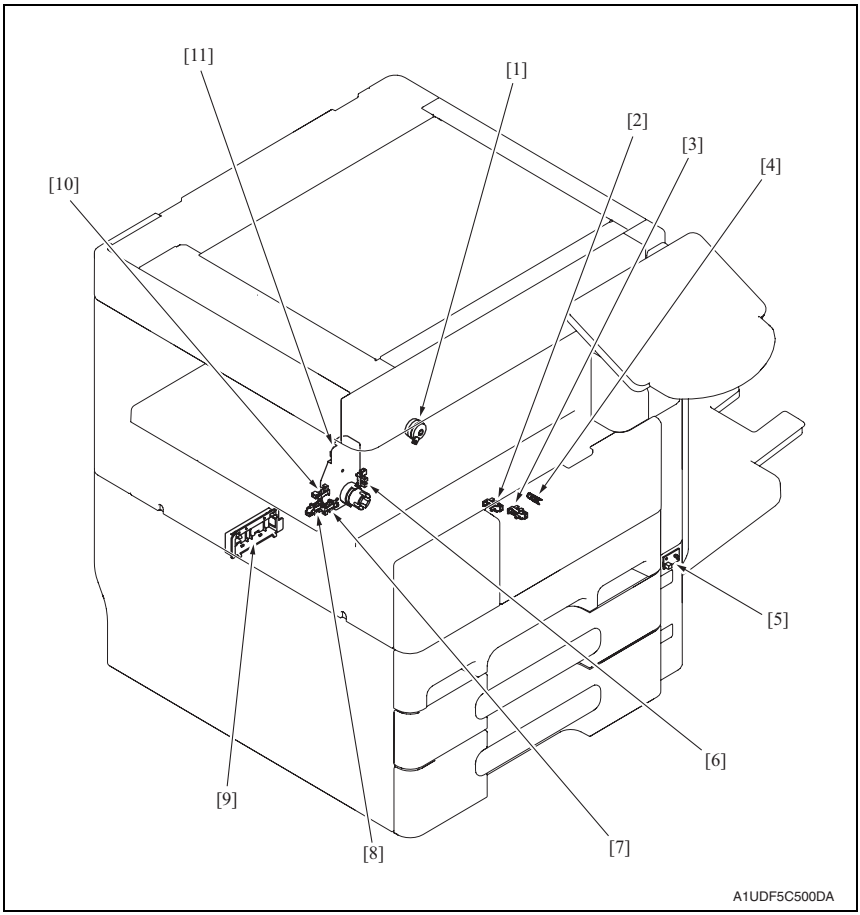

[1]	Tray 1 paper feed clutch (CL11)	[2]	Tray 1 upper limit sensor (PS12)
[3]	Tray 1 paper empty sensor (PS15)	[4]	Tray 1 paper feed sensor (PS11) *
[5]	Tray 1 LED board (LEDB1)	[6]	Tray 1 near empty sensor (PS14)
[7]	Tray 1 paper CD size detect sensor/2 (PS17)	[8]	Tray 1 paper CD size detect sensor/1 (PS16)
[9]	Tray 1 paper FD sensor board (PSDB11)	[10]	Tray 1 detection sensor (PS13)
[11]	Tray 1 lift-up motor (M11)		

*: Mounted on bizhub 423 only

27.1.9 Tray 2

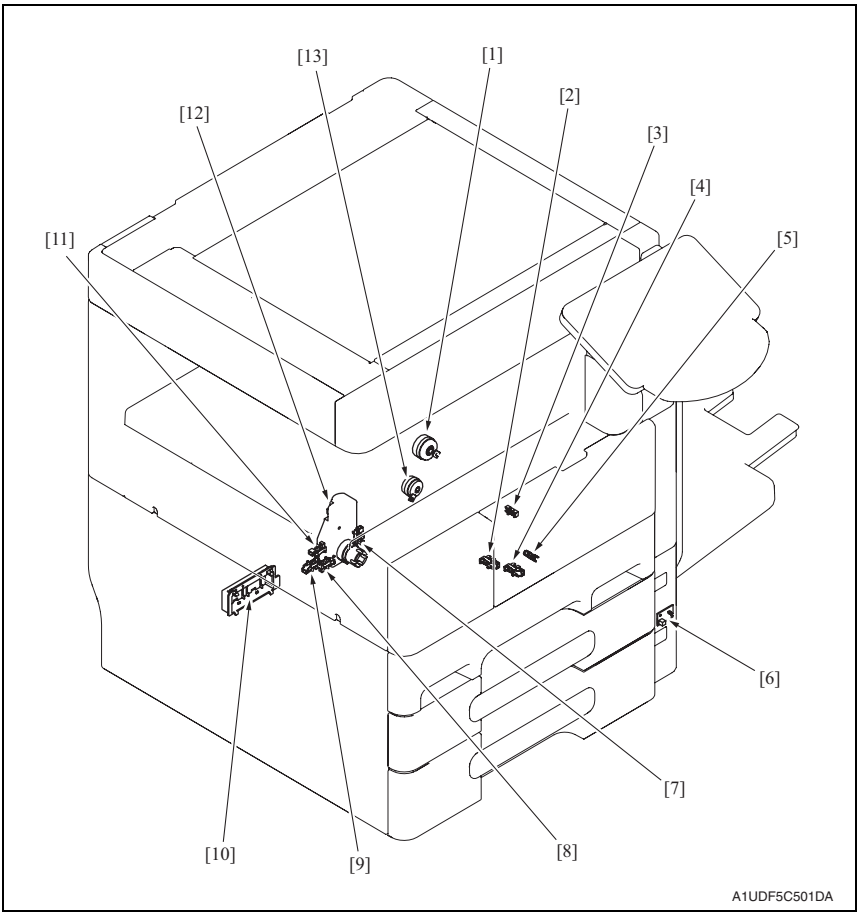

[1]	Tray 2 vertical transport clutch (CL22)	[2]	Tray 2 upper limit sensor (PS22)
[3]	Tray 2 vertical transport sensor (PS28) *1	[4]	Tray 2 paper empty sensor (PS25)
[5]	Tray 2 paper feed sensor (PS21) *2	[6]	Tray 2 LED board (LEDB2)
[7]	Tray 2 near empty sensor (PS24)	[8]	Tray 2 paper CD size detect sensor/2 (PS27)
[9]	Tray 2 paper CD size detect sensor/1 (PS26)	[10]	Tray 2 paper FD sensor board (PSDB21)
[11]	Tray 2 detection sensor (PS23)	[12]	Tray 2 lift-up motor (M21)
[13]	Tray 2 paper feed clutch (CL21)		

*1: Reflector type only for bizhub 423
*2: Mounted on bizhub 423 only

27.2 DF-621/SP-501

A. Load

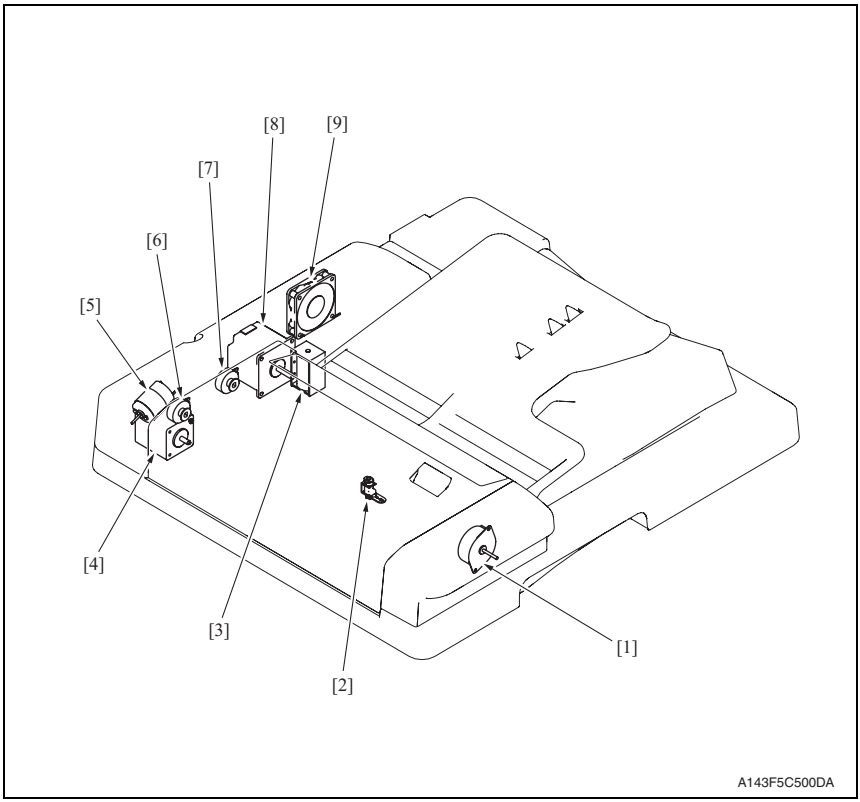

[1]	Glass cleaning motor (M4)	[2]	Stamp solenoid (SD2) *
[3]	Document exit roller release solenoid (SD1)	[4]	Document reading motor (M1)
[5]	Reading roller release motor (M3)	[6]	Document registration clutch (CL2)
[7]	Document feed clutch (CL1)	[8]	Document feed motor (M2)
[9]	DF cooling fan motor (FM1)		

*: Option

B. Sensor/board

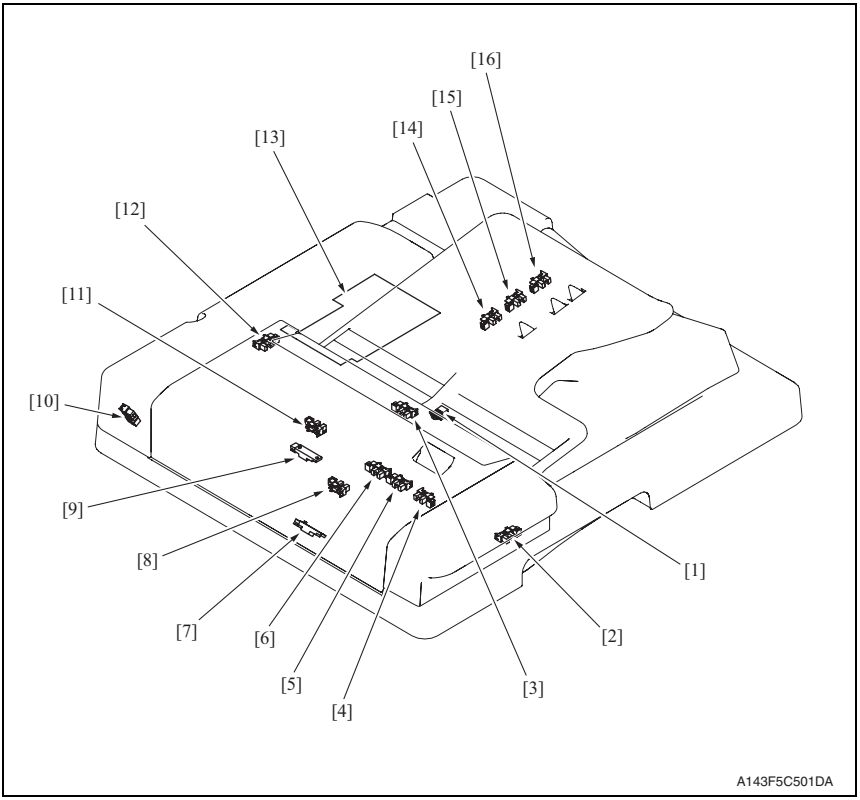

[1]	Document CD size sensor (VR1)	[2]	Glass cleaning roller home sensor (PS13)
[3]	Document set sensor (PS1)	[4]	Mixed Original sensor/3 (PS11)
[5]	Mixed Original sensor/2 (PS10)	[6]	Mixed Original sensor/1 (PS9)
[7]	Reading roller sensor (PS4)	[8]	Document exit sensor (PS5)
[9]	Document registration sensor (PS3)	[10]	Reading roller release position sensor (PS12)
[11]	Separation roller sensor (PS2)	[12]	Upper door sensor (PS14)
[13]	DF control board (DFCB)	[14]	Document FD size sensor/1 (PS6)
[15]	Document FD size sensor/2 (PS7)	[16]	Document FD size sensor/3 (PS8)

27.3 PC-109/PC-208 (Option)

A. Tray 3

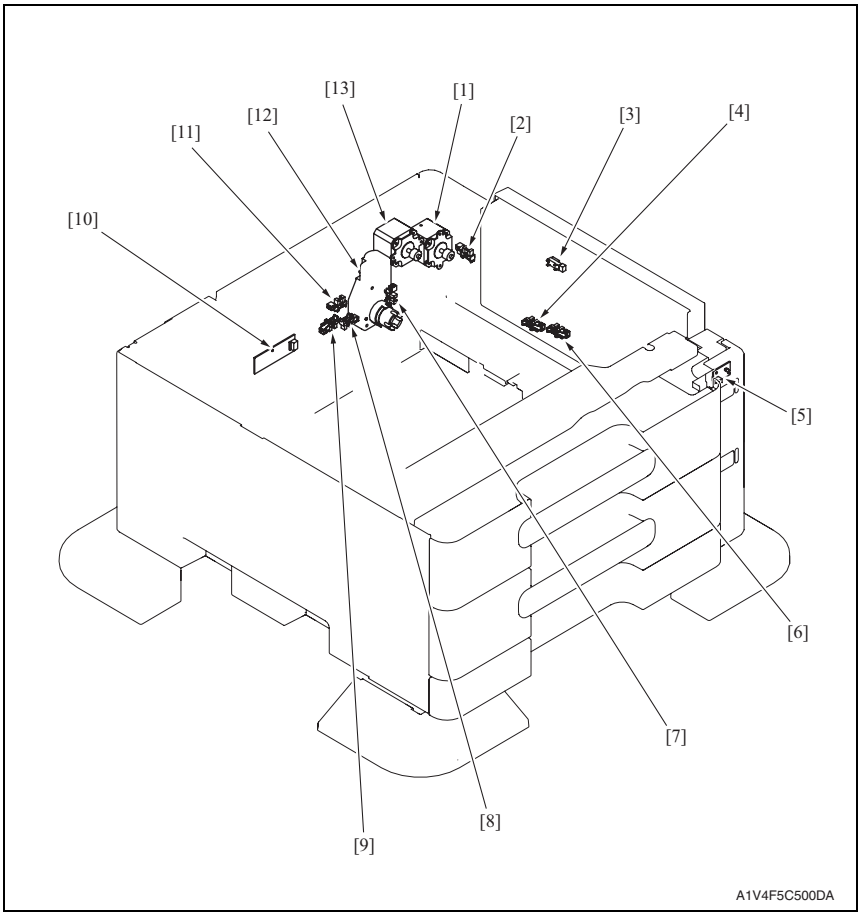

[1]	Tray 3 vertical transport motor (M32)	[2]	Right lower door sensor (PS39)
[3]	Tray 3 vertical transport sensor (PS36)	[4]	Tray 3 upper limit sensor (PS33)
[5]	Tray 3 LED board (LEDB31)	[6]	Tray 3 paper empty sensor (PS34)
[7]	Tray 3 near empty sensor (PS32)	[8]	Tray 3 CD paper size sensor/2 (PS38)
[9]	Tray 3 CD paper size sensor/1 (PS37)	[10]	Tray 3 paper FD sensor board (PSDTB31)
[11]	Tray 3 detection sensor (PS31)	[12]	Tray 3 lift-up motor (M33)
[13]	Tray 3 paper feed motor (M31)		

B. Tray 4

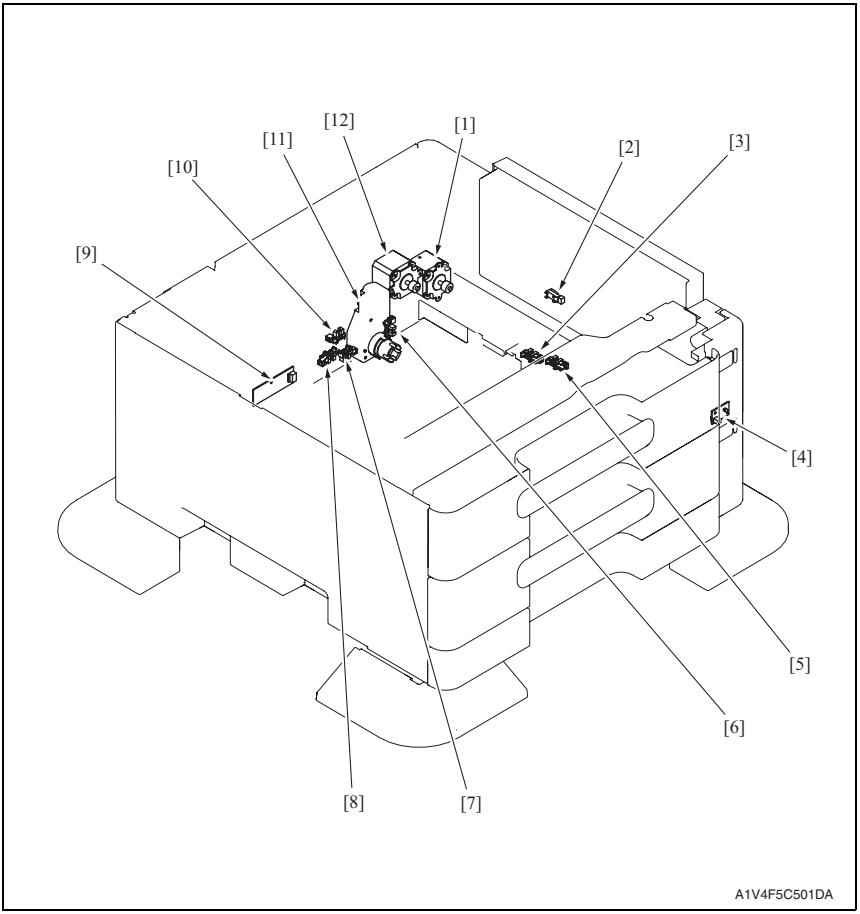

[1]	Tray 4 vertical transport motor (M42)	[2]	Tray 4 vertical transport sensor (PS46)
[3]	Tray 4 upper limit sensor (PS43)	[4]	Tray 4 LED board (LEDB41)
[5]	Tray 4 empty sensor (PS44)	[6]	Tray 4 near empty sensor (PS42)
[7]	Tray 4 CD paper size sensor/2 (PS48)	[8]	Tray 4 CD paper size sensor/1 (PS47)
[9]	Tray 4 paper FD sensor board (PSDTB41)	[10]	Tray 4 detection sensor (PS41)
[11]	Tray 4 lift-up motor (M43)	[12]	Tray 4 paper feed motor (M41)

C. Board/switch/others

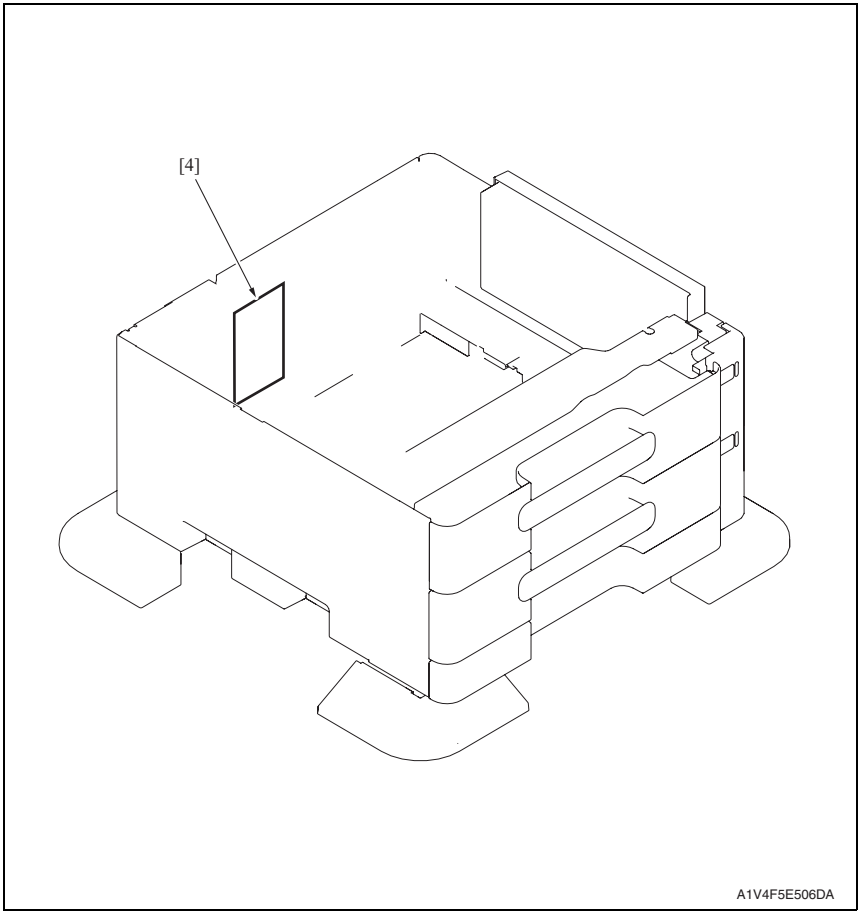

[1] PC control board (PCCB31)

27.4 PC-409 (Option)

A. Load

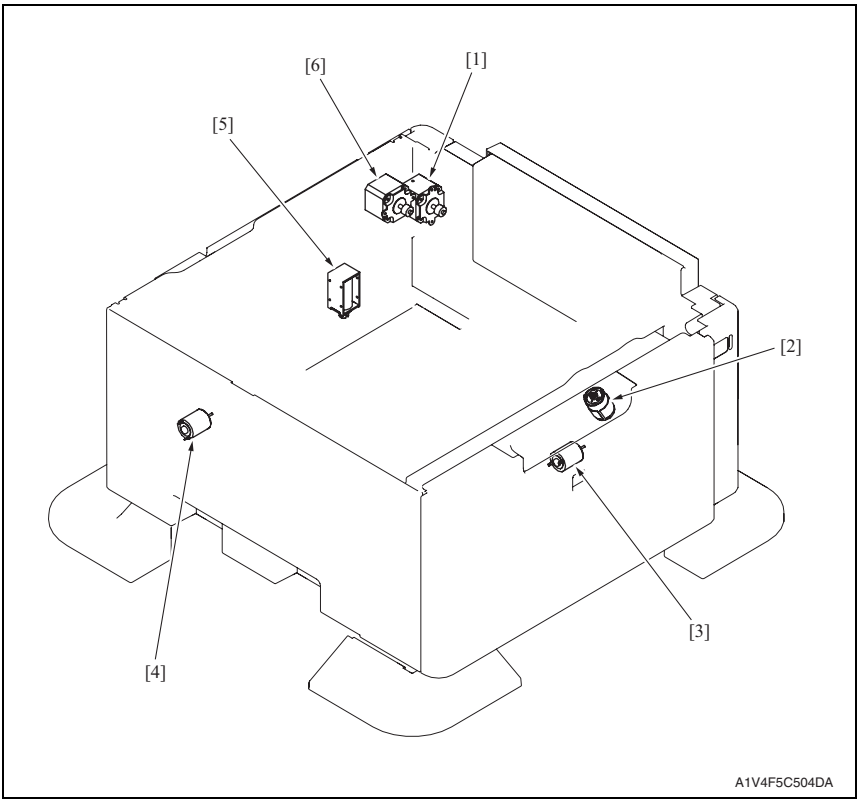

[1]	Vertical transport motor (M52)	[2]	Elevator motor (M55)
[3]	Shift motor (M54)	[4]	Division board position motor (M53)
[5]	Tray lock solenoid (SD51)	[6]	Paper feed motor (M51)

B. Sensor

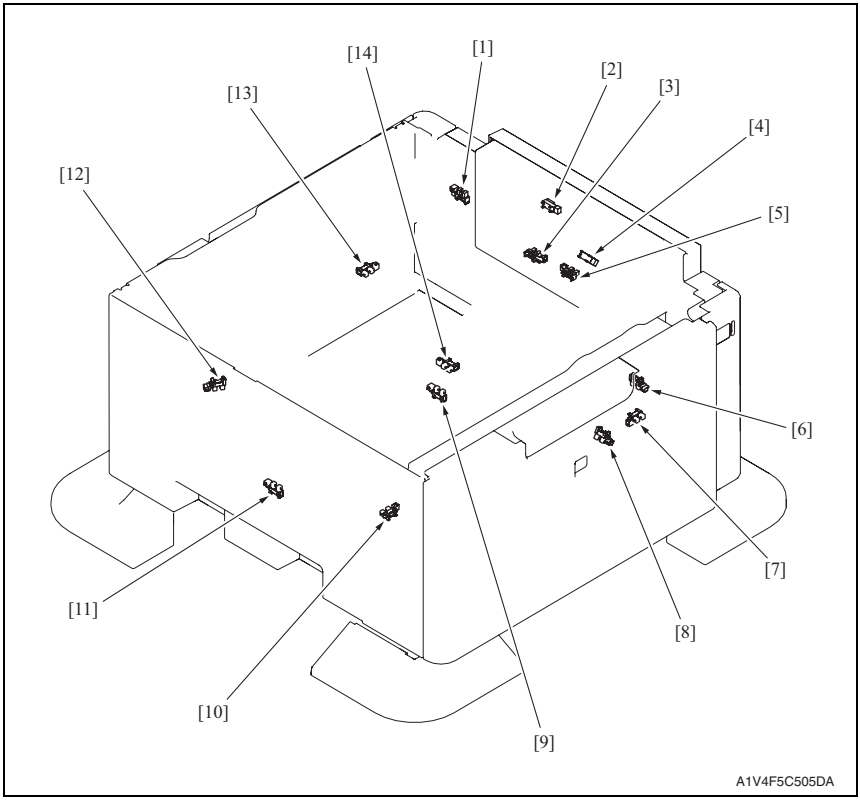

[1]	Right lower door sensor (PS55)	[2]	Vertical transport sensor (PS52)
[3]	Lift-up upper limit sensor (PS54)	[4]	Paper feed sensor (PS51)
[5]	Paper empty sensor (PS53)	[6]	Elevator motor sensor (PS5A)
[7]	Lift-down over run sensor (PS57)	[8]	Shift motor sensor (PS58)
[9]	Shifter stop position sensor (PS5B)	[10]	Shift tray empty sensor (PS59)
[11]	Shifter home position sensor (PS5C)	[12]	Division board position sensor (PS5E)
[13]	Tray detection sensor (PS56)	[14]	Lift-down lower limit sensor (PS5D)

C. Board/switch/others

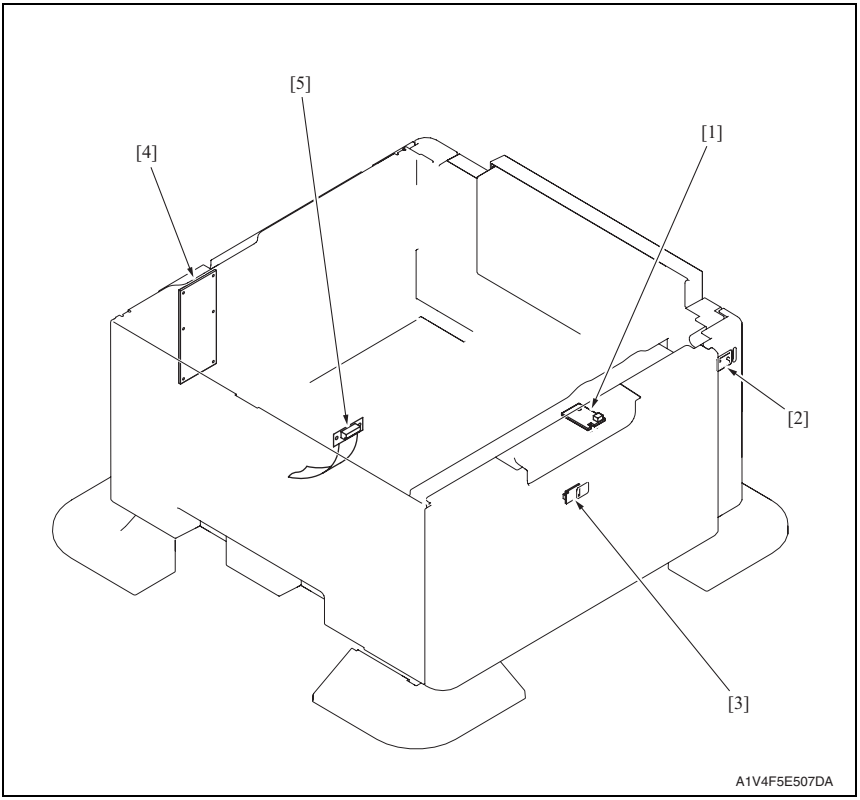

[1] Main tray paper empty board (MTPEB)
[2] Tray 3 LED board (LEDB51)
[3] Manual down control board (MDCB)
[4] PC control board (PCCB51)
[5] PC relay board (PCREYB)

27.5 JS-505 (Option)

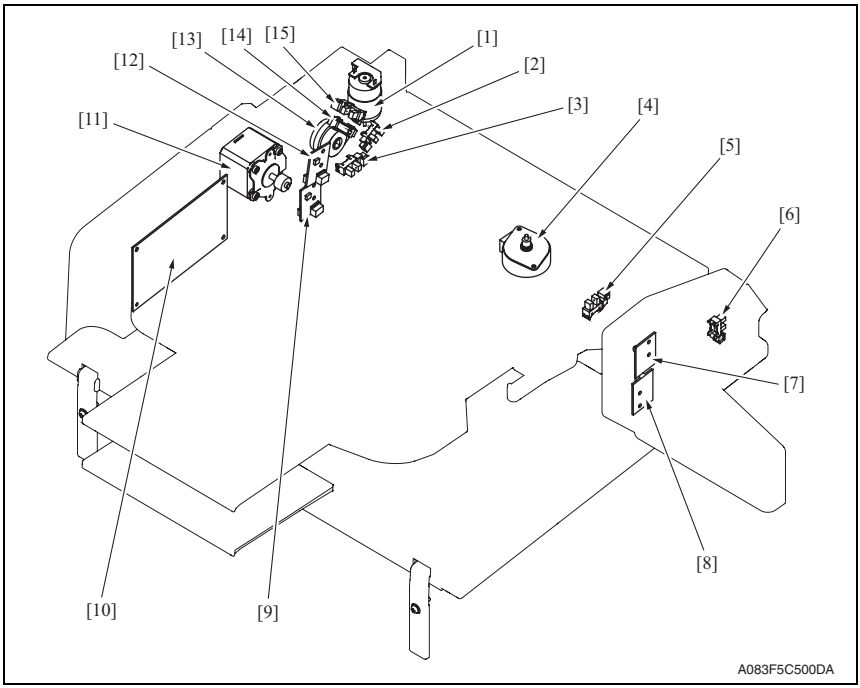

[1]	Route change motor (M3)	[9]	Lower tray paper full detect board/PR (T1FDTB/PR)
[2]	Route change home sensor (PS4)	[10]	JS control board (JSCB)
[3]	Pressure/retraction home sensor (PS5)	[11]	Transport Motor (M1)
[4]	Shift motor (M2)	[12]	Upper tray paper full detect board/PR (T2FDTB/PR)
[5]	Shift home sensor (PS6)	[13]	Roller pressure/retraction clutch (CL1)
[6]	Front door sensor (PS3)	[14]	Lower tray exit sensor (PS1)
[7]	Upper tray paper full detect board/LED (T2FDTB/LED)	[15]	Upper tray exit sensor (PS2)
[8]	Lower tray paper full detect board/LED (T1FDTB/LED)		

27.6 FS-527 (Option)

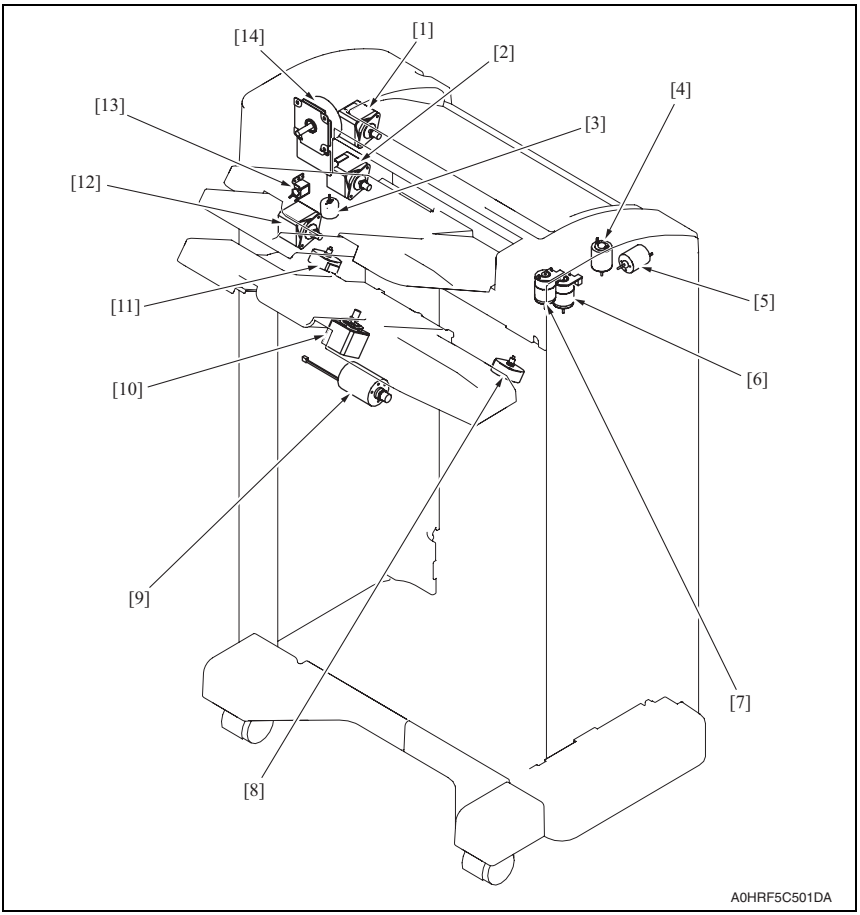

[1]	Paper passage motor/2 (M3)	[8]	Leading edge stopper motor (M14)
[2]	Conveyance motor (M4)	[9]	Tray2 shift motor (M16)
[3]	Accommodation paddle motor (M12)	[10]	Stapler movement motor (M11)
[4]	Tray1 path switching motor (M8)	[11]	Alignment plate motor (M13)
[5]	Upper lower path switching motor (M6)	[12]	Exit motor (M5)
[6]	Accommodation roller retraction motor (M10)	[13]	Accommodation paddle solenoid (SD1)
[7]	Exit roller retraction motor (M9)	[14]	Elevate motor (M15)

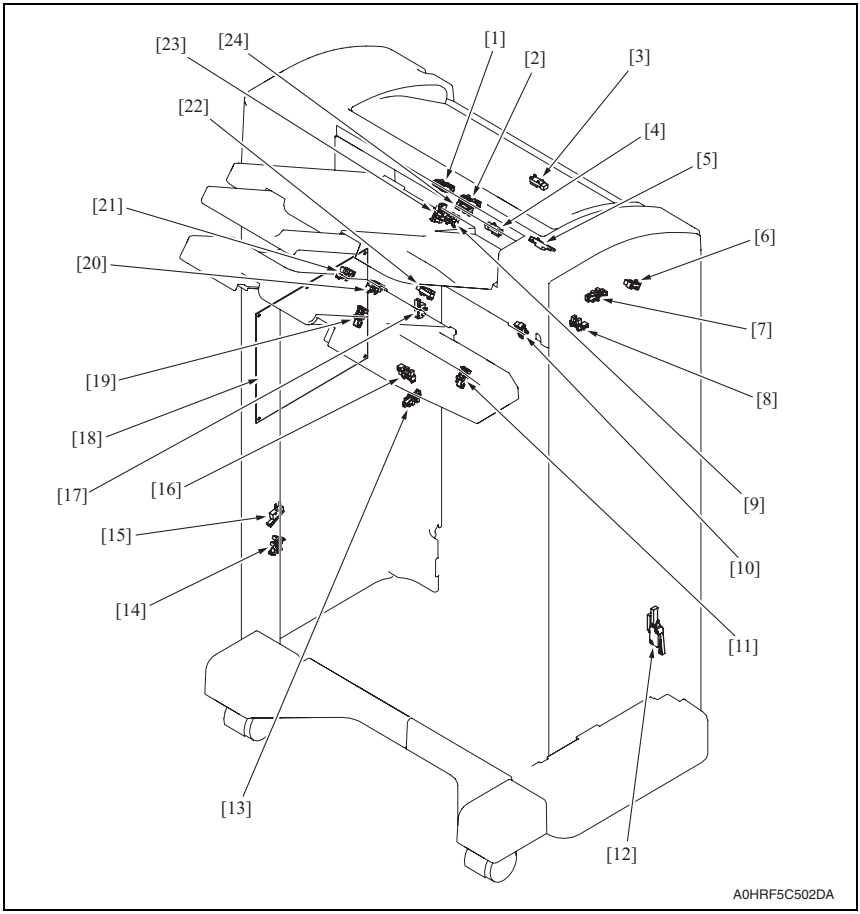

[1]	Tray1 full sensor (PS22)	[13]	Tray2 shift home sensor (PS25)
[2]	Upper door sensor (PS14)	[14]	Tray2 lower position sensor (PS21)
[3]	Registration sensor (PS10)	[15]	Tray2 lower position switch (SW3)
[4]	lower path sensor (PS9)	[16]	Tray2 upper position sensor (PS24)
[5]	Punch hole full sensor (PS30)	[17]	Tray2 upper position switch (SW2)
[6]	Upper lower path switching sensor (PS26)	[18]	FS control board (FSCB)
[7]	Tray1 path switching home sensor (PS7)	[19]	Stapler home sensor/1 (PS18)
[8]	Accommodation roller pressure sensor (PS13)	[20]	Leading edge stopper home sensor (PS20)
[9]	Upper path sensor (PS8)	[21]	Alignment plate home sensor (PS17)
[10]	Exit roller pressure sensor (PS12)	[22]	Tray2 paper detection sensor (PS16)
[11]	Stapler home sensor/2 (PS19)	[23]	Saddle path sensor (PS11)
[12]	Front door switch (SW1)	[24]	Tray1 path sensor (PS6)

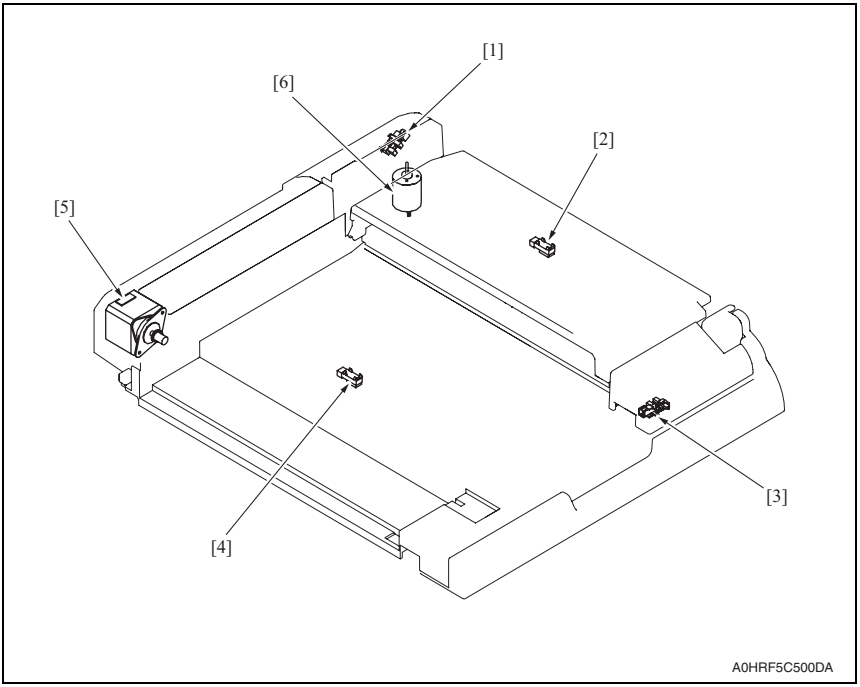

[1]	Duplex path switching sensor (PS3)	[4]	Paper passage sensor/2 (PS2)
[2]	Paper passage sensor/1 (PS1)	[5]	Paper passage motor/1 (M1)
[3]	Horizontal conveyance cover sensor (PS5)	[6]	Duplex path switching motor (M2)

27.7 PK-517 (Option)

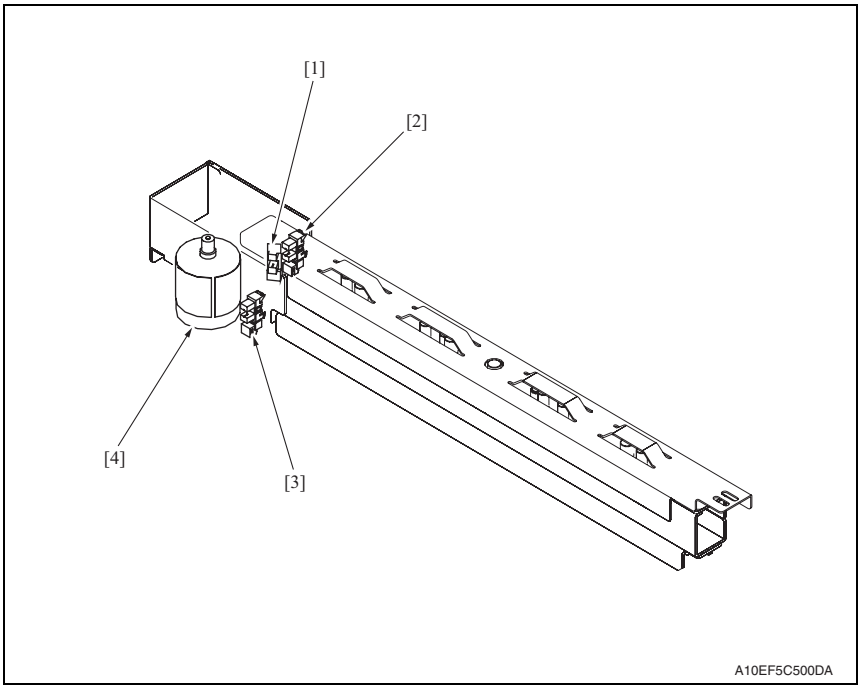

[1] Punch cam position sensor (PS200)

[2] Punch home sensor/1 (PS100)

[3] Punch pulse sensor/1 (PS300)

[4] Punch motor/1 (M100)

27.8 SD-509 (Option)

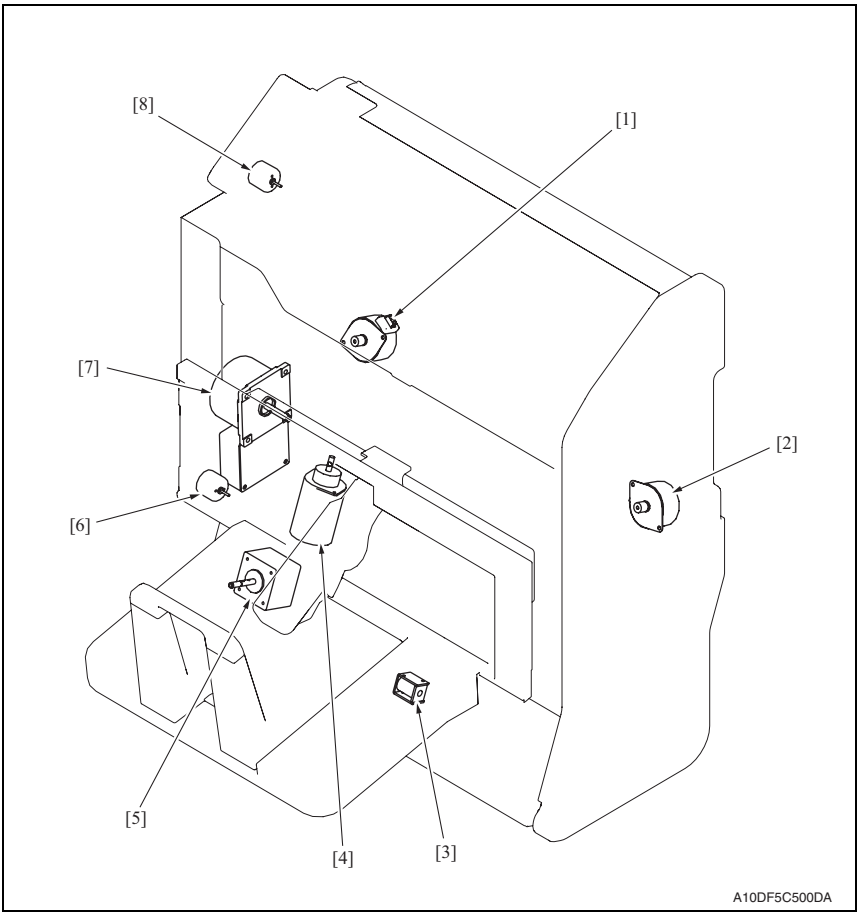

[1]	Center staple alignment motor/R (M23)	[5]	Leading edge stopper motor (M20)
[2]	Center staple alignment motor/F (M24)	[6]	Lower paddle motor (M22)
[3]	Leading edge grip solenoid (SD3)	[7]	Center fold roller motor (M25)
[4]	Center fold plate motor (M26)	[8]	Upper paddle motor (M21)

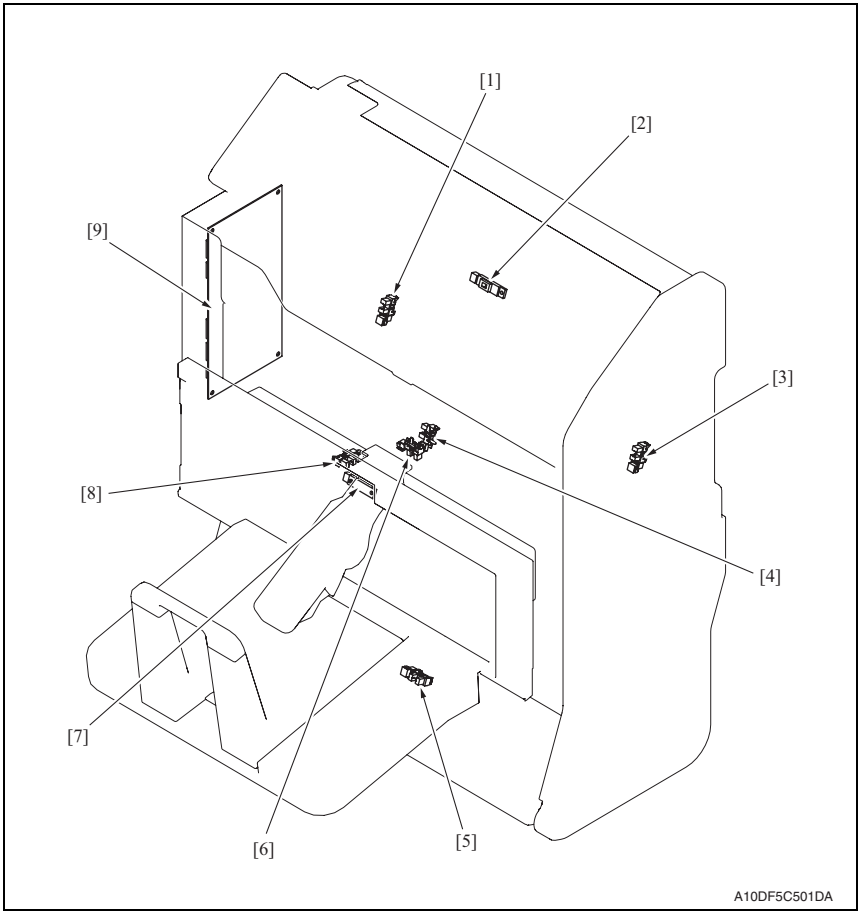

[1]	Center staple alignment home sensor/R (PS41)	[6]	Booklet tray full sensor (PS50)
[2]	Paper detection sensor/1 (PS43)	[7]	Paper detection sensor/2 (PS44)
[3]	Center staple alignment home sensor/F (PS42)	[8]	Booklet tray near full sensor (PS48)
[4]	Center fold plate home sensor (PS47)	[9]	SD drive board (SDDB)
[5]	Leading edge stopper home sensor (PS45)		

27.9 JS-603 (Option)

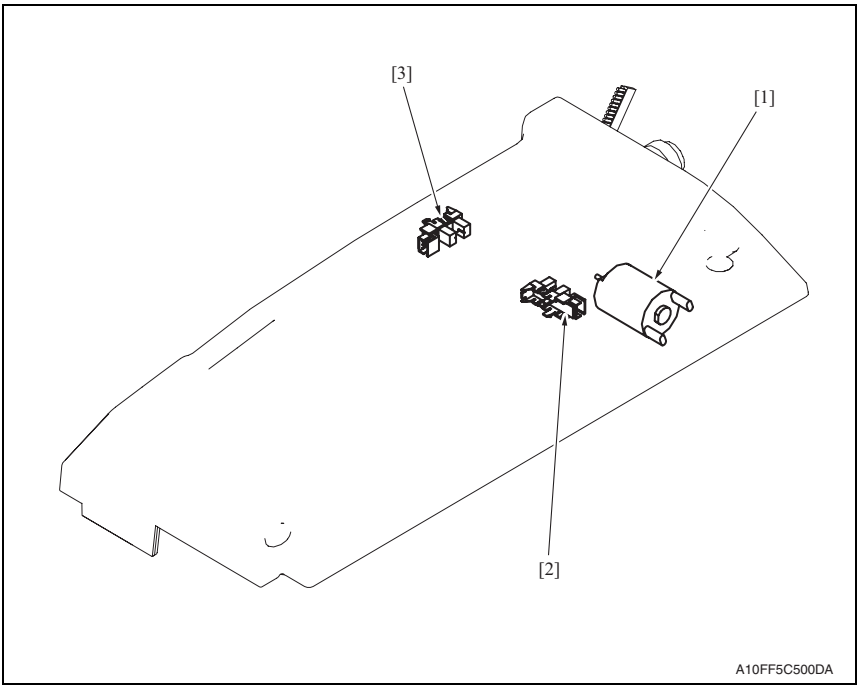

[1] Tray3 exit roller retraction motor (M17)

[2] Tray3 exit roller retraction sensor (PS35)

[3] Tray3 full sensor (PS36)

27.10 FS-529 (Option)

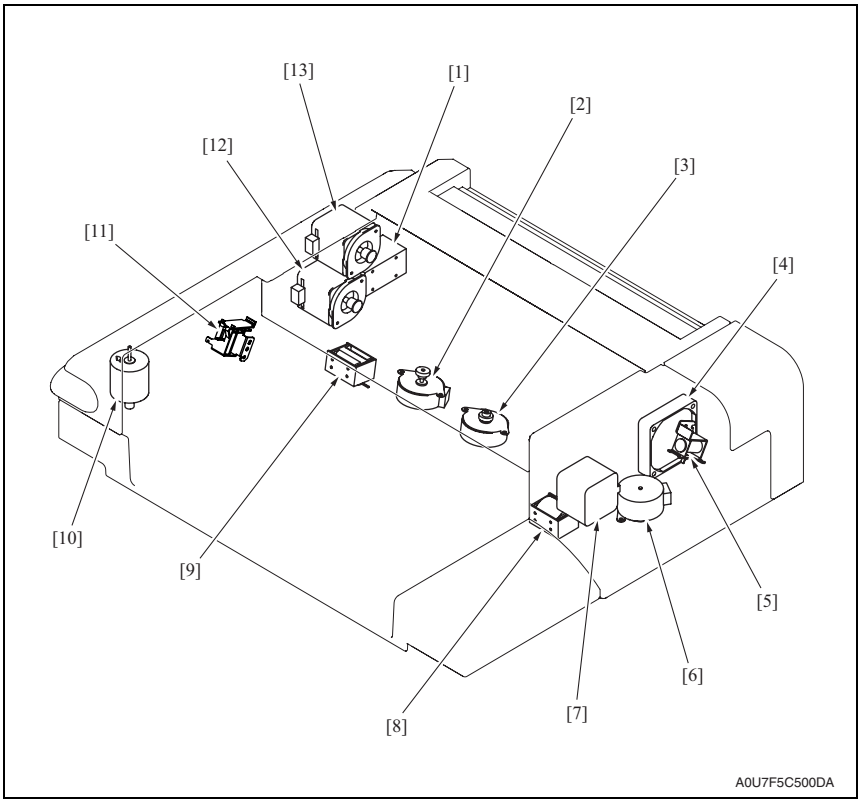

[1]	Flapper solenoid (SD4)	[8]	Paper surface detect solenoid (SD1)
[2]	Alignment motor/R (M4)	[9]	Alignment stopper solenoid (SD3)
[3]	Alignment motor/F (M3)	[10]	Tray up/down motor (M2)
[4]	fan motor (FM1)	[11]	Paddle solenoid (SD2)
[5]	Belt retract solenoid (SD5)	[12]	Conveyance motor/2 (M6)
[6]	Stapler movement motor (M7)	[13]	Conveyance motor/1 (M5)
[7]	Pick up roller position motor (M1)		

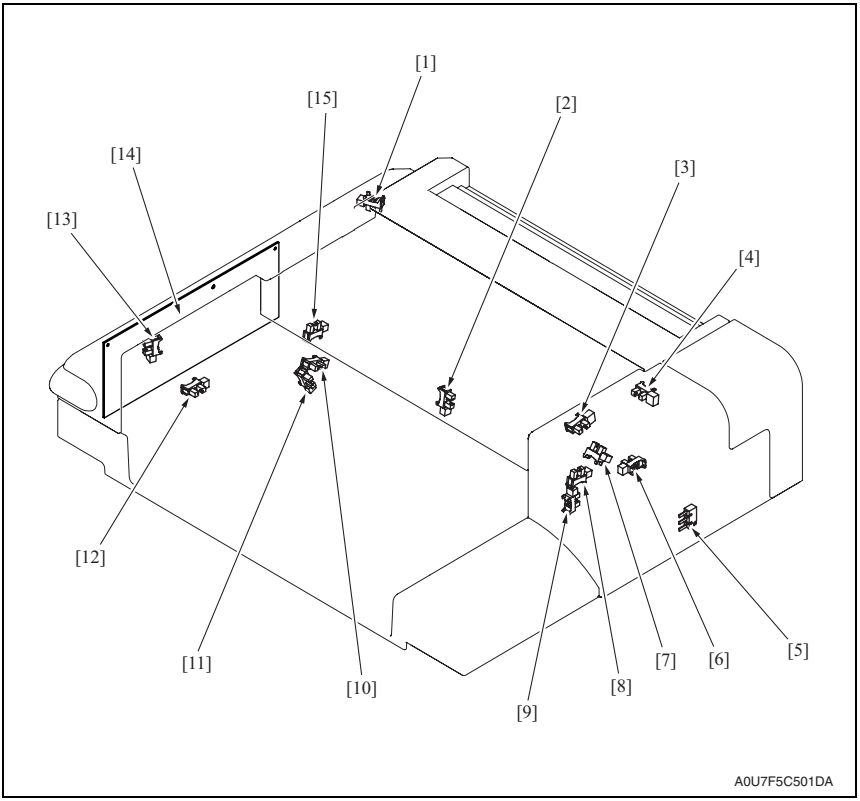

[1]	Paper passage sensor/1 (PS1)	[9]	Stapler home sensor (PS11)
[2]	Paper empty sensor (PS7)	[10]	Paper surface detect sensor/1 (PS2)
[3]	Leading edge stopper home sensor (PS14)	[11]	Paper surface detect sensor/2 (PS3)
[4]	Paper passage sensor/2 (PS10)	[12]	Tray lower limit sensor (PS6)
[5]	Front door switch (SW1)	[13]	Tray up/down operation sensor (PS4)
[6]	Belt position sensor (PS13)	[14]	FS control board (FSCB)
[7]	Pick up roller position sensor (PS12)	[15]	Alignment plate home sensor/R (PS9)
[8]	Alignment plate home sensor/F (PS8)		

28. CONNECTOR LAYOUT DRAWING

28.1 Main body

28.1.1 Printer control board (PRCB)

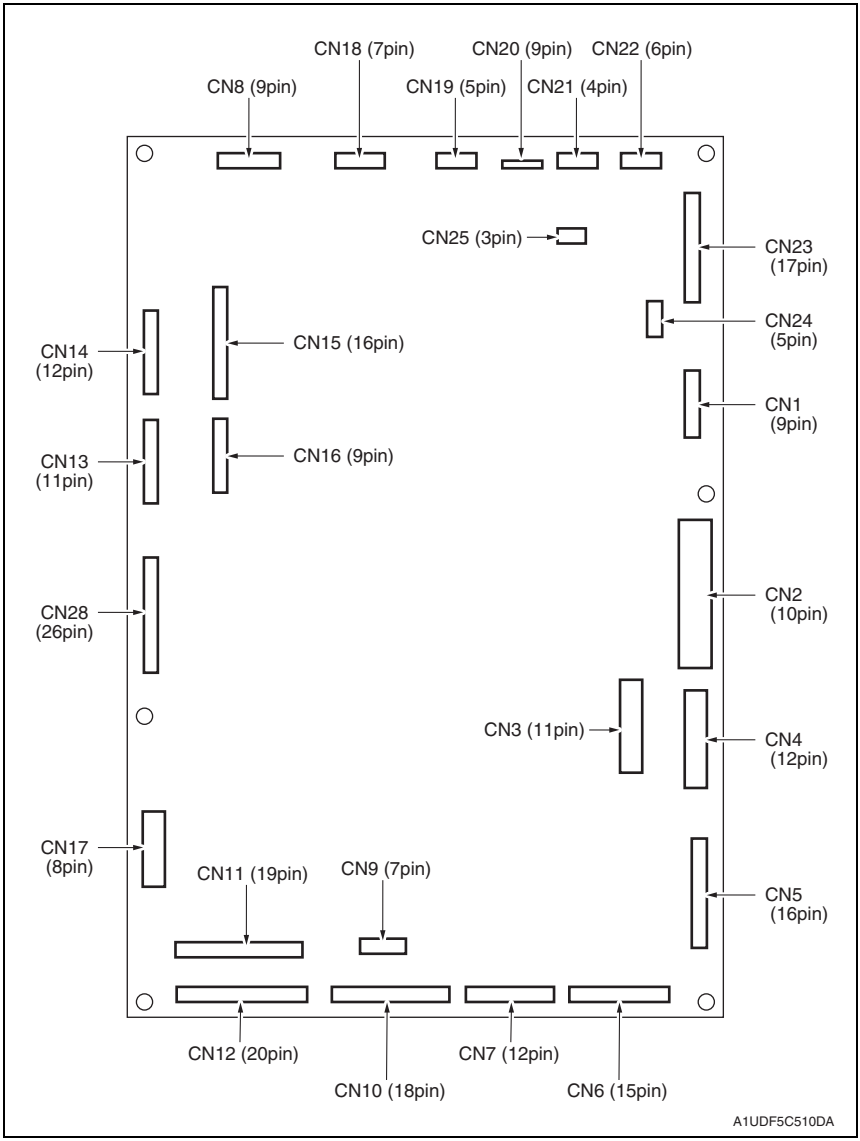

28.1.2 MFP board (MFPB)

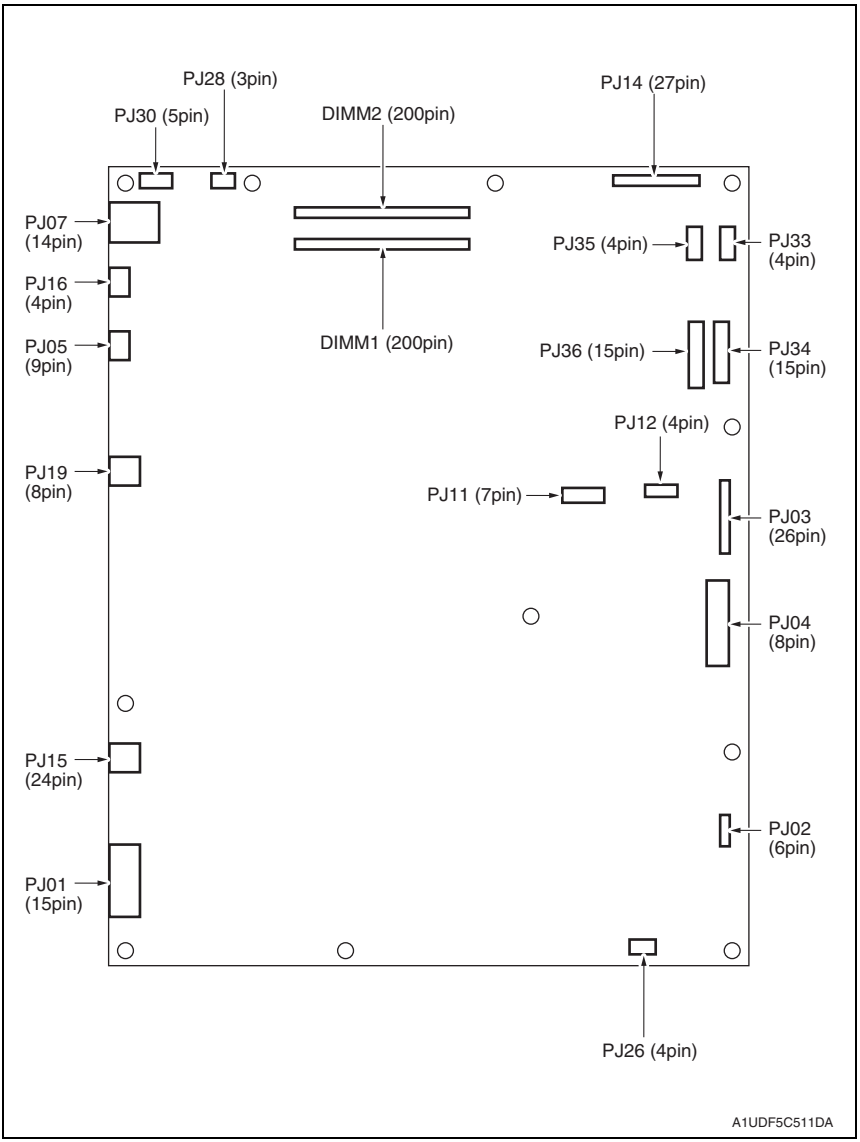

28.1.3 Scanner relay board (REYB/SCAN)

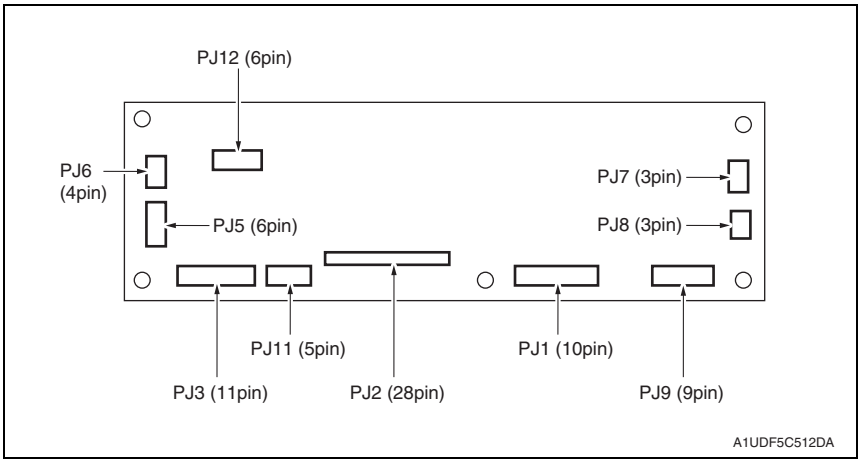

28.1.4 DF control board (DFCB)

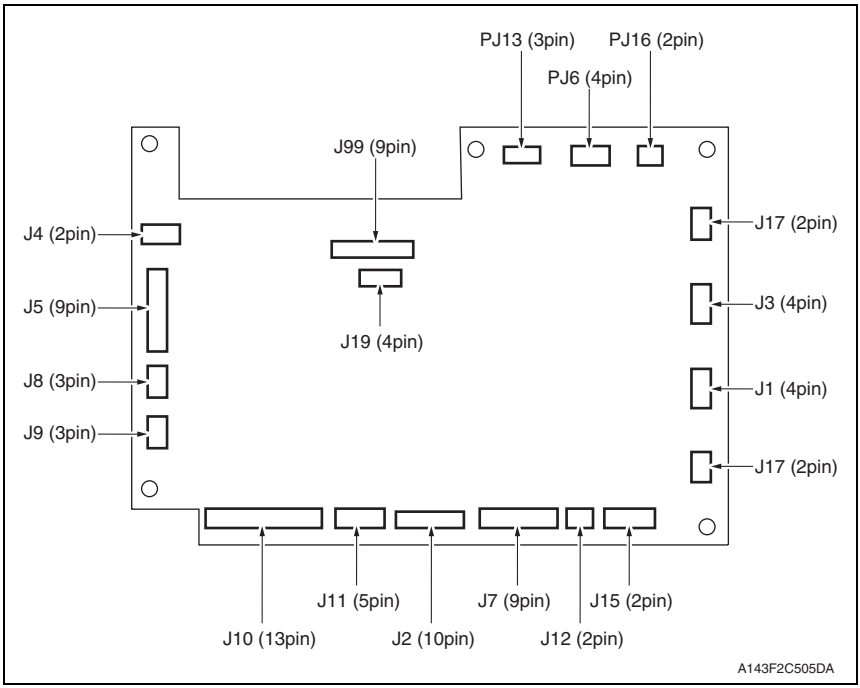

28.1.5 PC Control board (PCCB)

(1) PC-109/PC-208

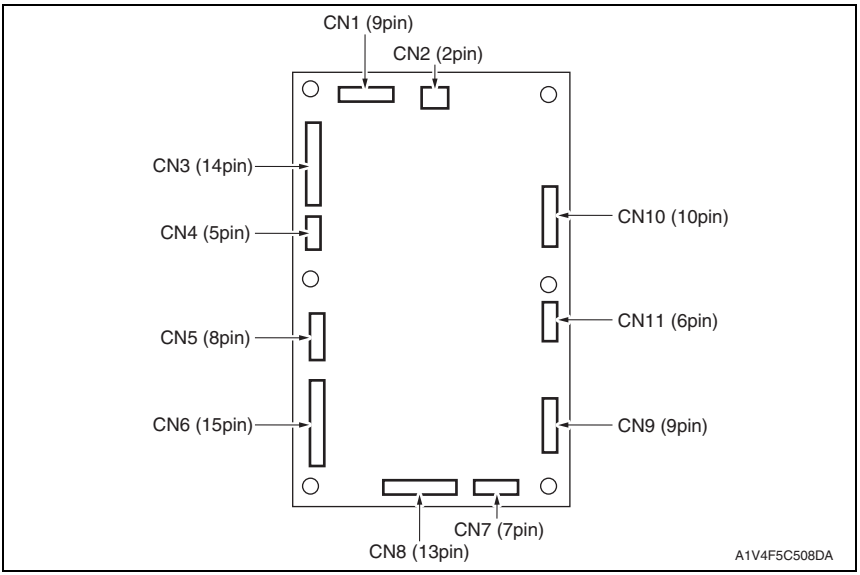

(2) PC-409

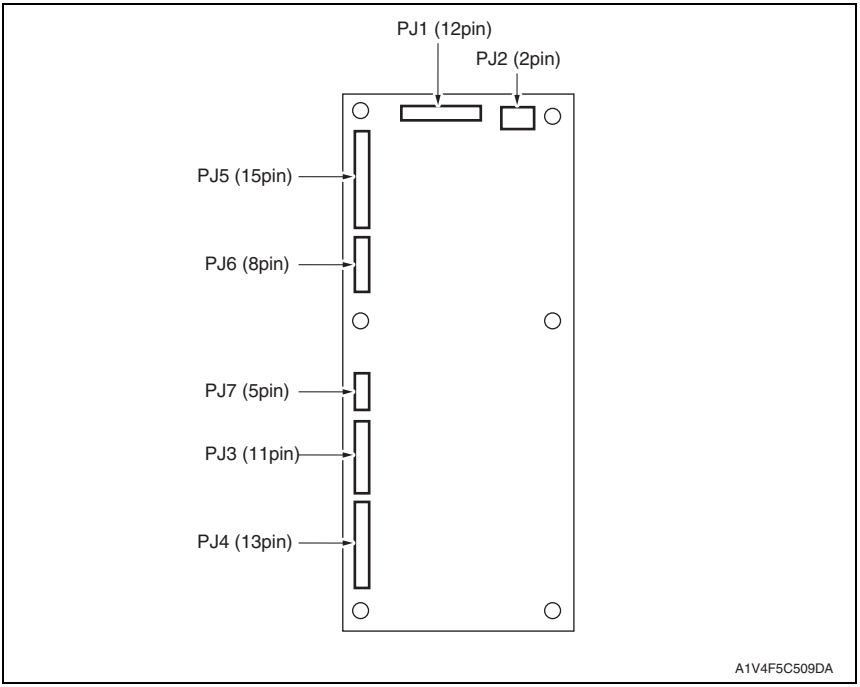

28.1.6 FS control board (FSCB)

(1) FS-527

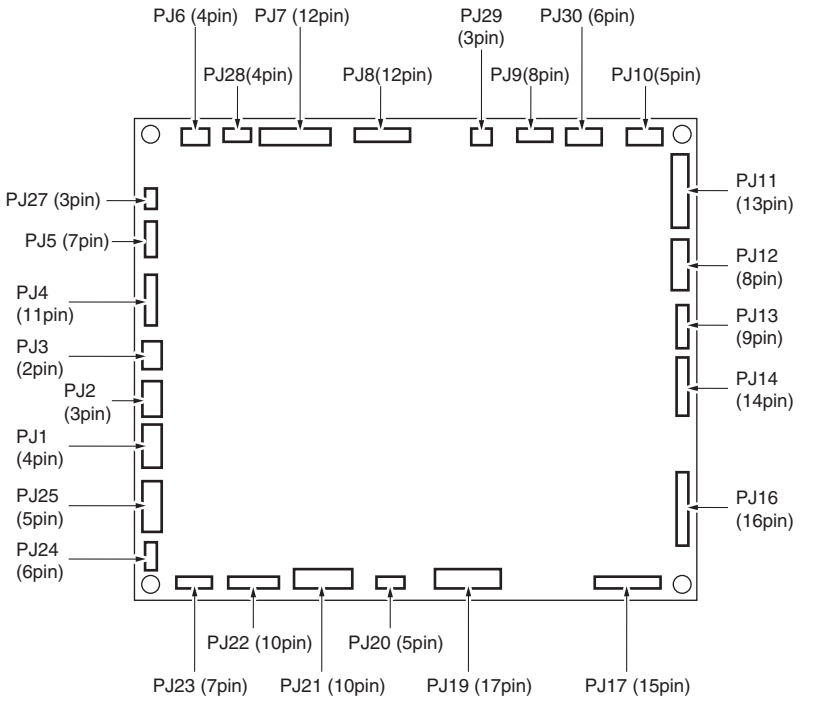

(2) FS-529

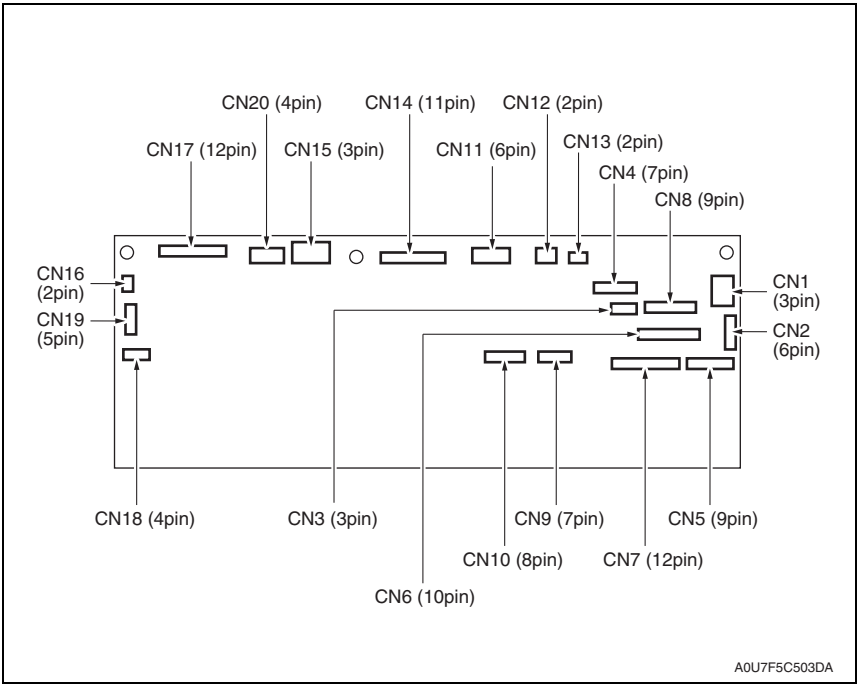
CN20 (4pin)
CN14 (11pin)
CN12 (2pin)
CN17 (12pin)
CN15 (3pin)
CN11 (6pin)
CN13 (2pin)
CN4 (7pin)
CN8 (9pin)
CN16 (2pin)
CN19 (5pin)
CN1 (3pin)
CN2 (6pin)
CN18 (4pin)
CN3 (3pin)
CN9 (7pin)
CN5 (9pin)
CN10 (8pin)
CN7 (12pin)
CN6 (10pin)
A0U7F5C503DA

28.1.7 SD drive board (SDDB)

(1) SD-509

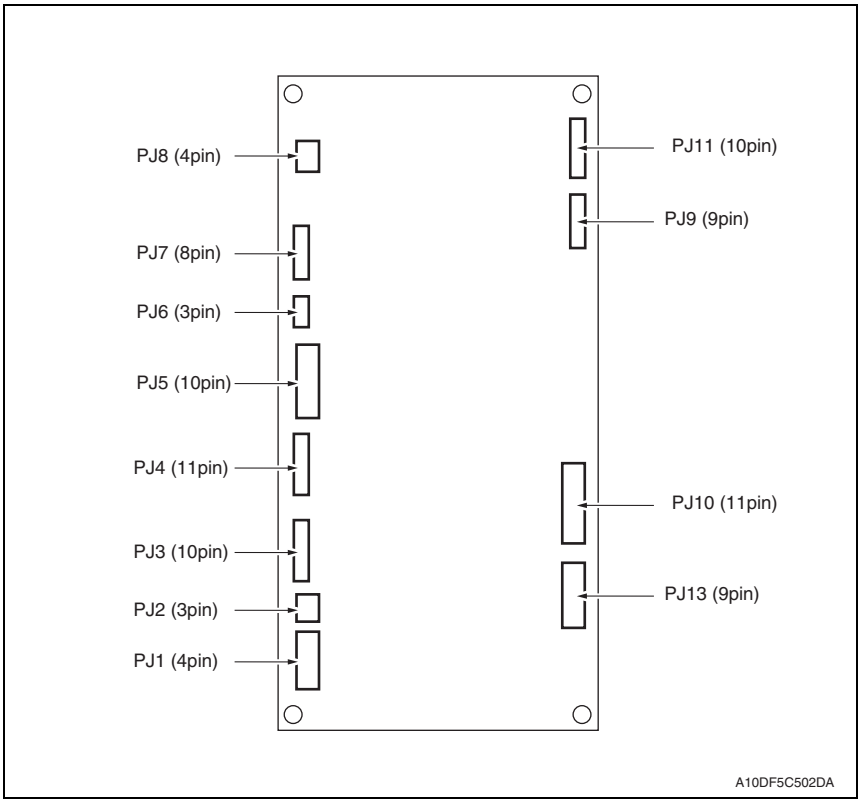

29. RELAY CONNECTOR LAYOUT DRAWING

29.1 Main body

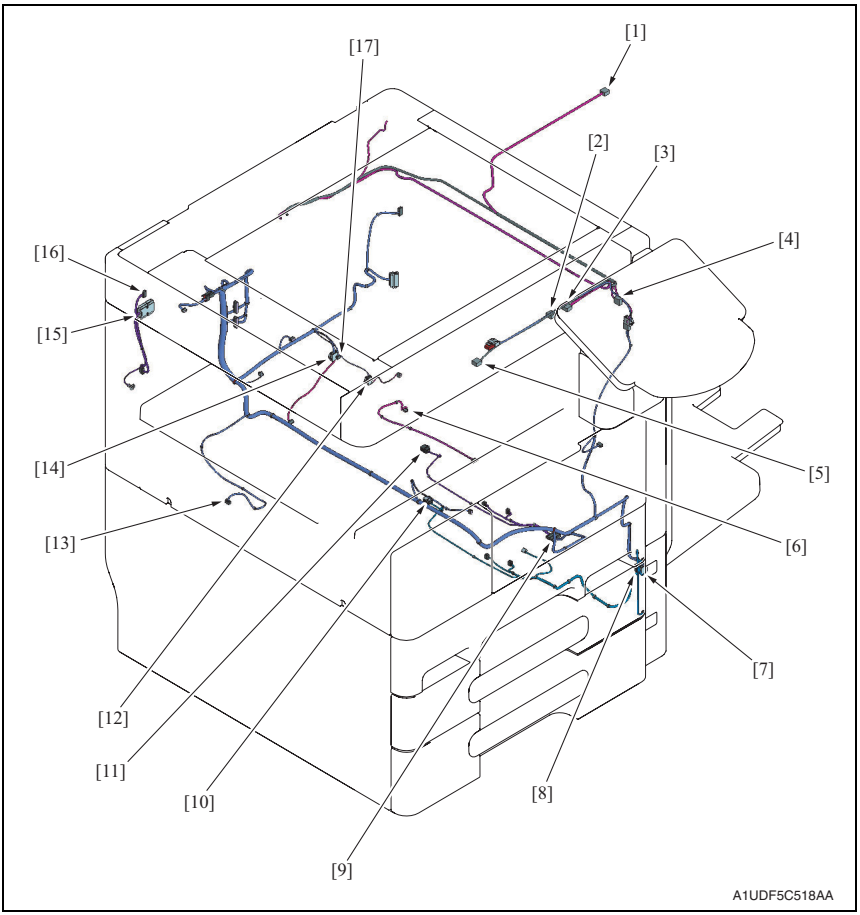

No.	CN No.	Pin	Location	No.	CN No.	Pin	Location
[1]	CN33	4 pin	D-25	[2]	CN604	2 pin	T-10
[3]	CN606	5 pin	S-11	[4]	CN602	2 pin	T-9
[5]	CN616	4 pin	T-10	[6]	CN28	4 pin	E-13
[7]	CN39	4 pin	E-23	[8]	CN6	11 pin	E-5
[9]	CN1	11 pin	E-2	[10]	CN7	2 pin	D-4
[11]	CN2	2 pin	E-1	[12]	CN35	2 pin	E-25
[13]	CN95	3 pin	E-7	[14]	CN13	4 pin	E-7
[15]	CN92	3 pin	K-23	[16]	CN93	6 pin	K-23
[17]	CN38	2 pin	E-24				

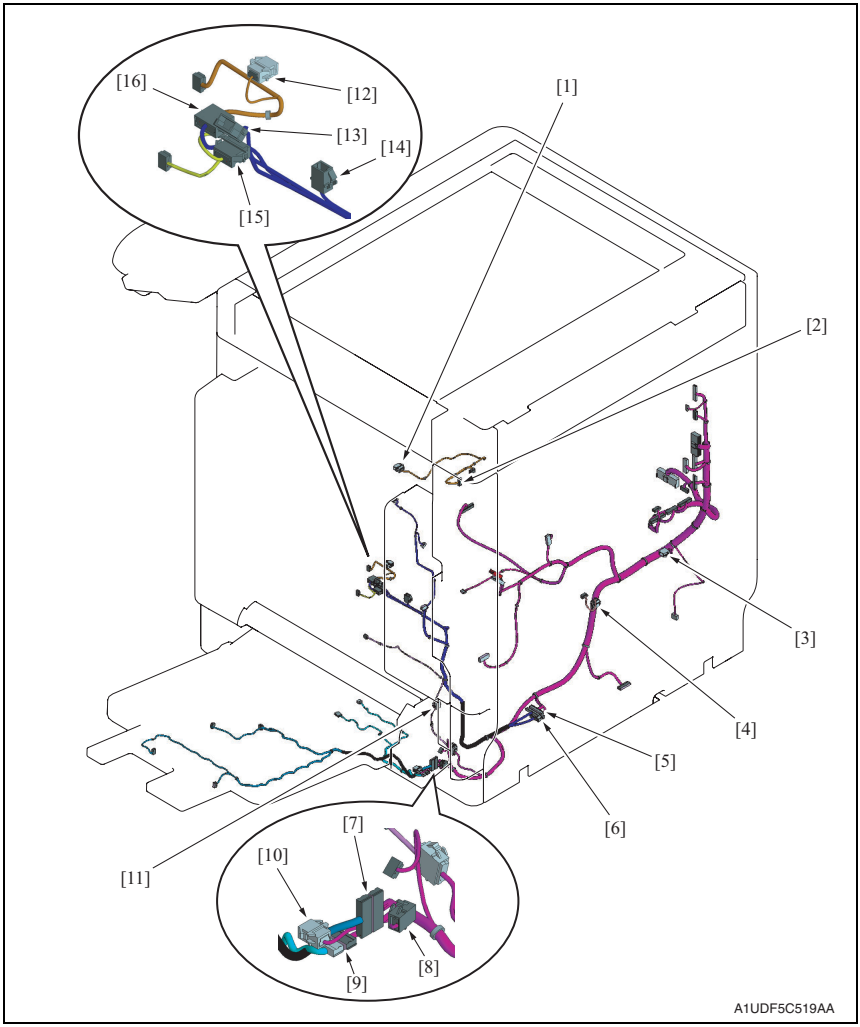

No.	CN No.	Pin	Location	No.	CN No.	Pin	Location
[1]	CN42	3 pin	D-14	[2]	CN86	7 pin	E-14
[3]	CN43	3 pin	E-9	[4]	CN61	4 pin	V-17
[5]	CN46	16 pin	E-21 to 22	[6]	CN54	7 pin	E-18
[7]	CN17	12 pin	E-11	[8]	CN14	2 pin	E-10
[9]	CN22	6 pin	E-12	[10]	CN15	2 pin	E-10
[11]	CN57	5 pin	E-17	[12]	CN53	2 pin	D-18
[13]	CN44	3 pin	D-22	[14]	CN56	2 pin	E-18
[15]	CN88	4 pin	D-21	[16]	CN59	5 pin	E-18

30. TIMING CHART

30.1 Main body

30.1.1 Timing chart when the main power switch is turned ON

A. Timing chart

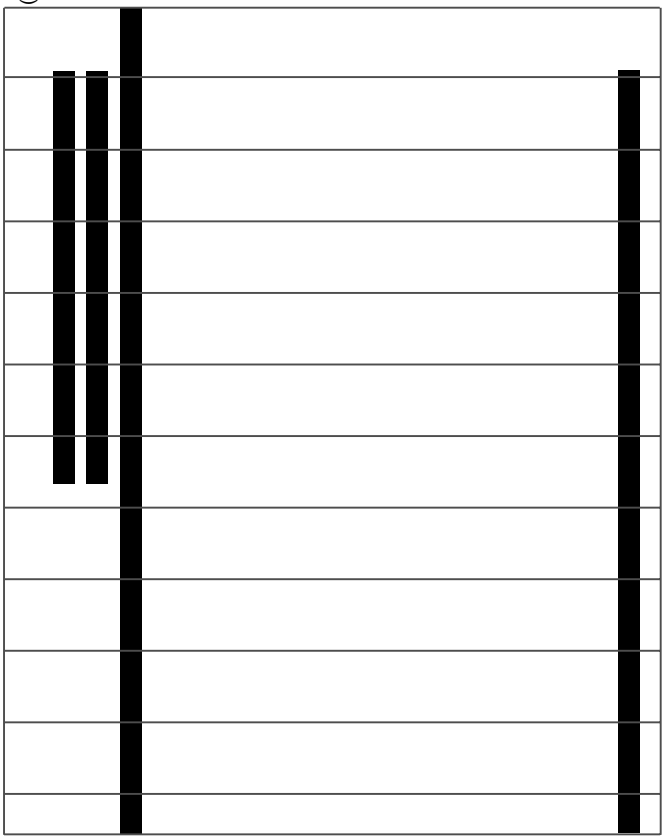

A1UDF5E516DA

30.1.2 Timing chart in color mode

A. Operating conditions

- A4 or 8 $^1/_2$ x 11/tray1

B. Timing chart

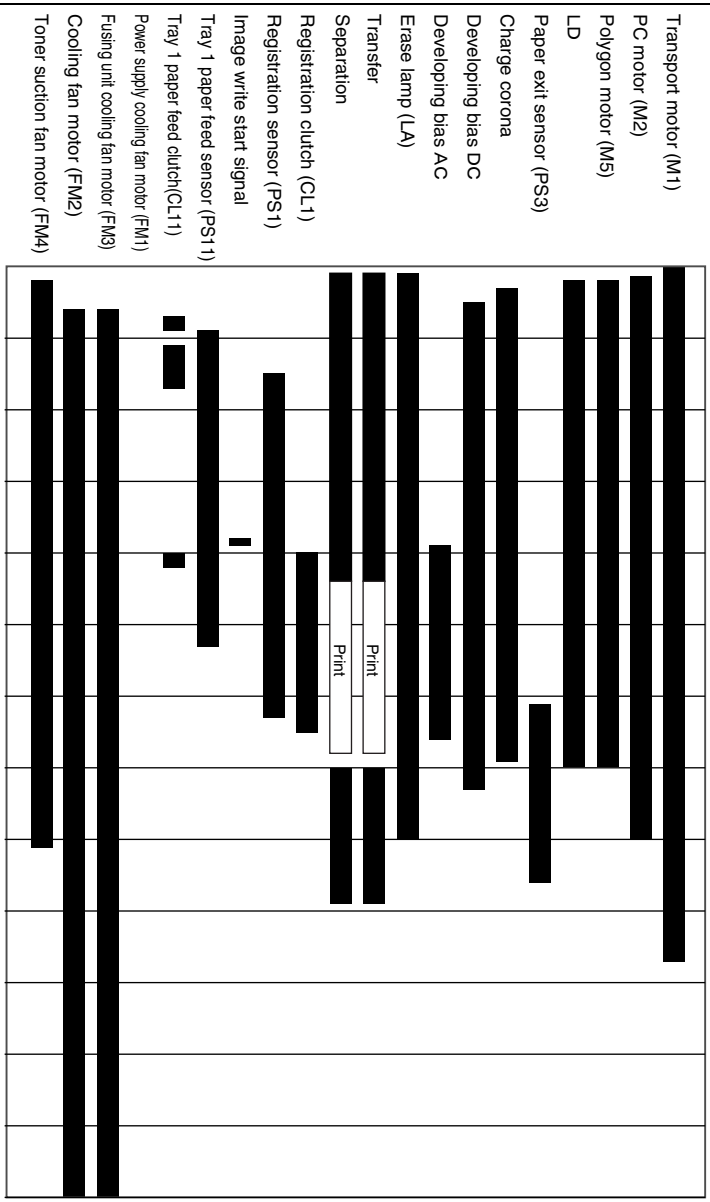

A1UDF5E517DA

30.2 DF-621

30.2.1 1-sided mode

A. Operating conditions

- A4 or 8 $^1/_2$ x 11/full size/2 originals

B. Timing chart

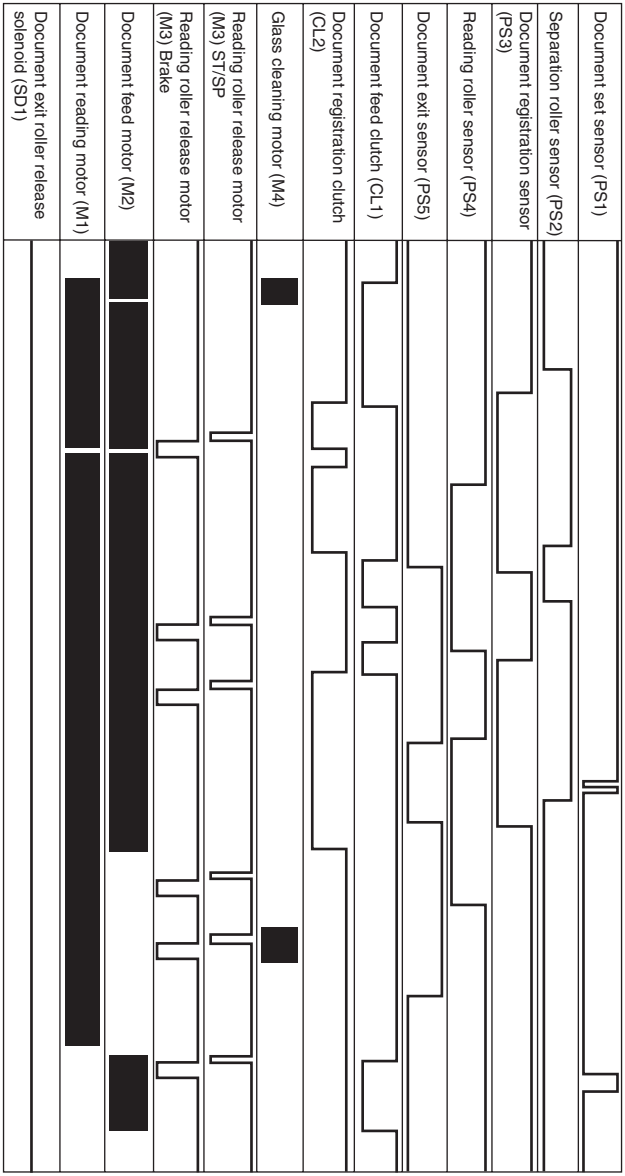

30.2.2 2-sided mode

A. Operating conditions

- A4 or 8 $^1/_2$ x 11/full size/2 originals

B. Timing chart

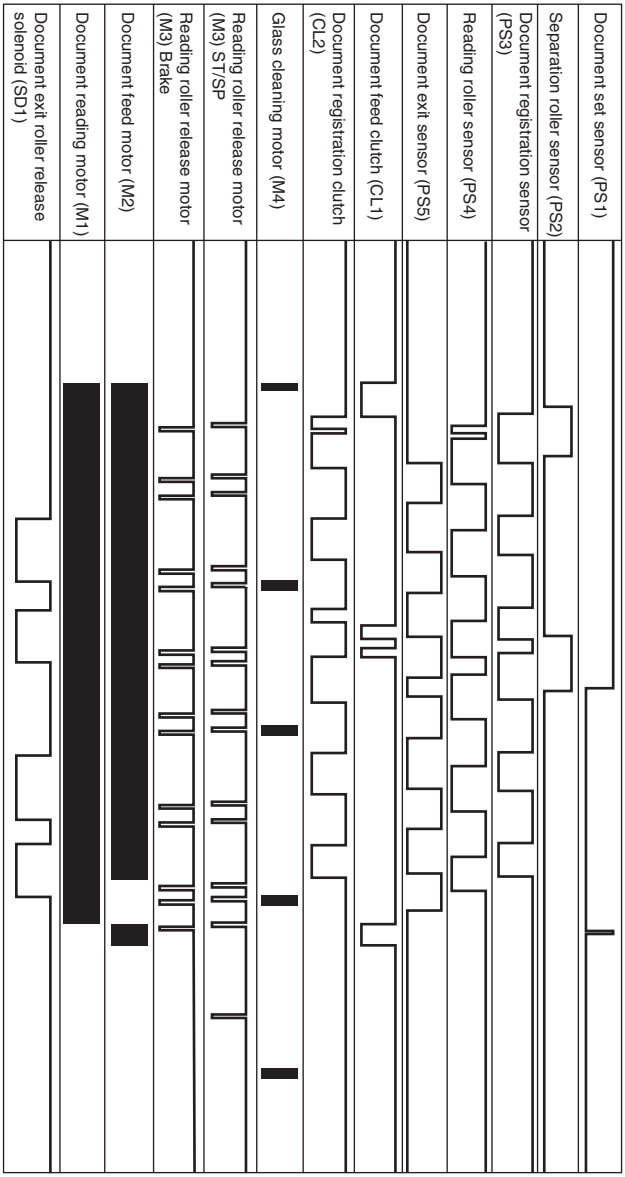

A143F5E507DA

30.3 FS-527/SD-509/PK-517

30.3.1 Shift mode

A. Operating conditions

- A4 or 8 $^1/_2$ x 11/2 originals/1-side

B. Timing chart

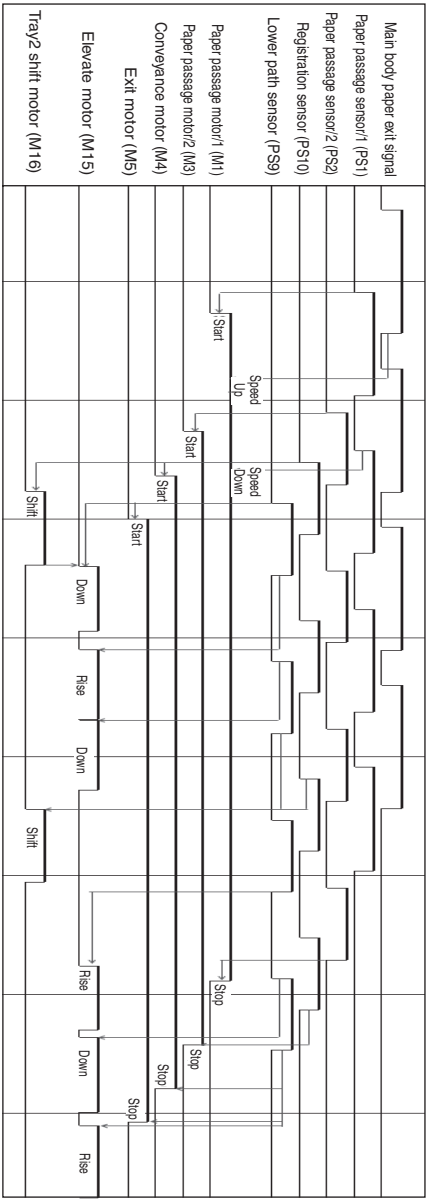

30.3.2 2 flat stitching staples mode

A. Operating conditions

- A4 or 8 $^1/_2$ x 11/2 originals/1-side

B. Timing chart

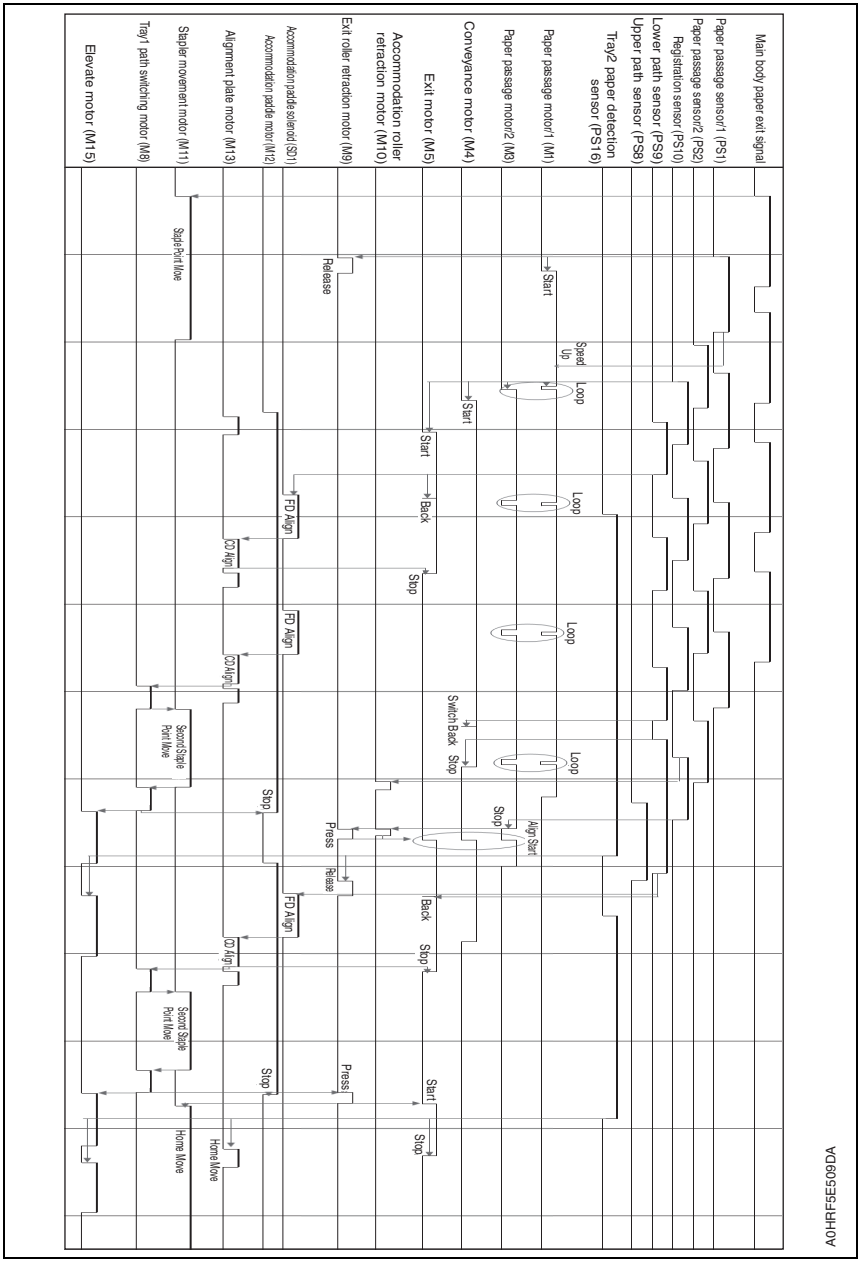

30.3.3 Center staples mode

A. Operating conditions

- A4S or 8 $^1/_2$ x 11S/2 originals/1-side

B. Timing chart

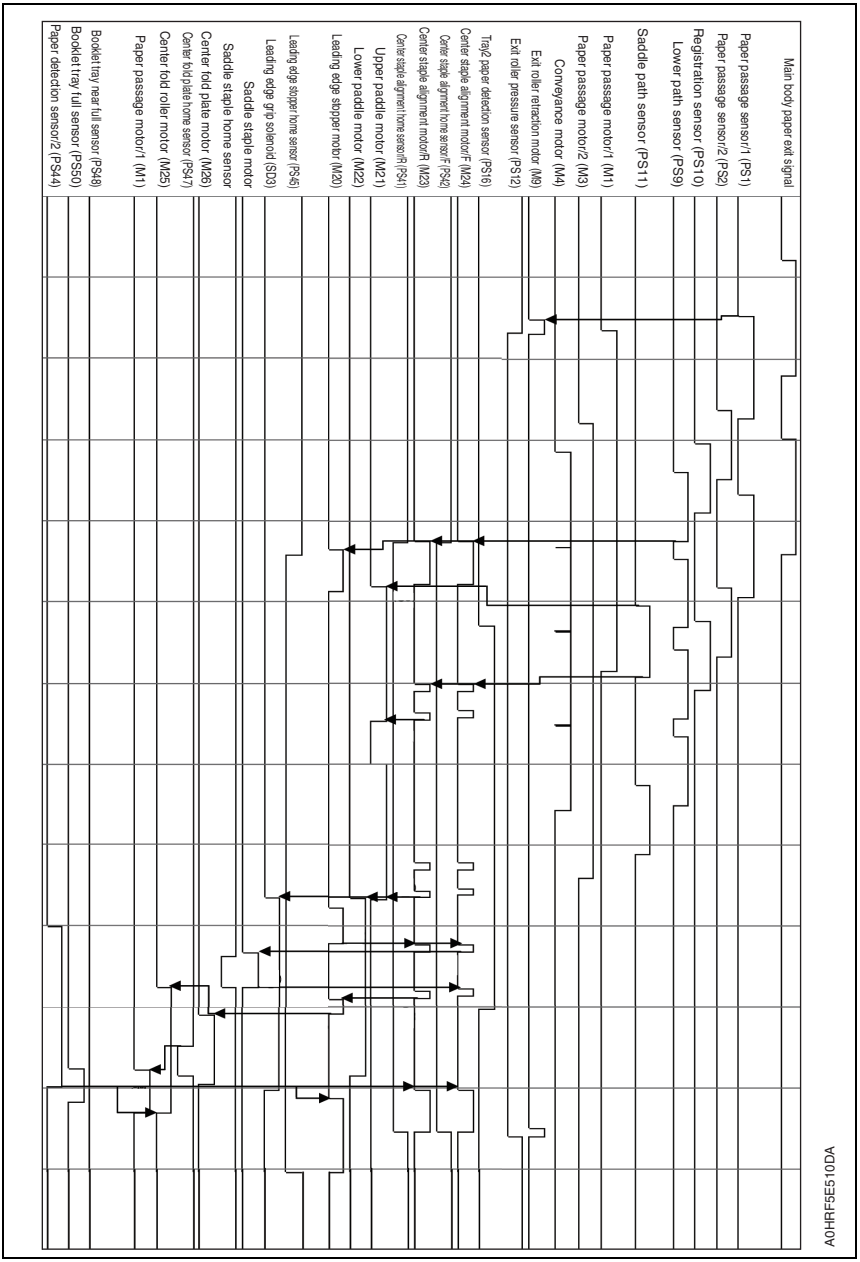

30.3.4 Punch mode

A. Operating conditions

- A4S or 8 $^1/_2$ x 11S/2 originals/1-side

B. Timing chart

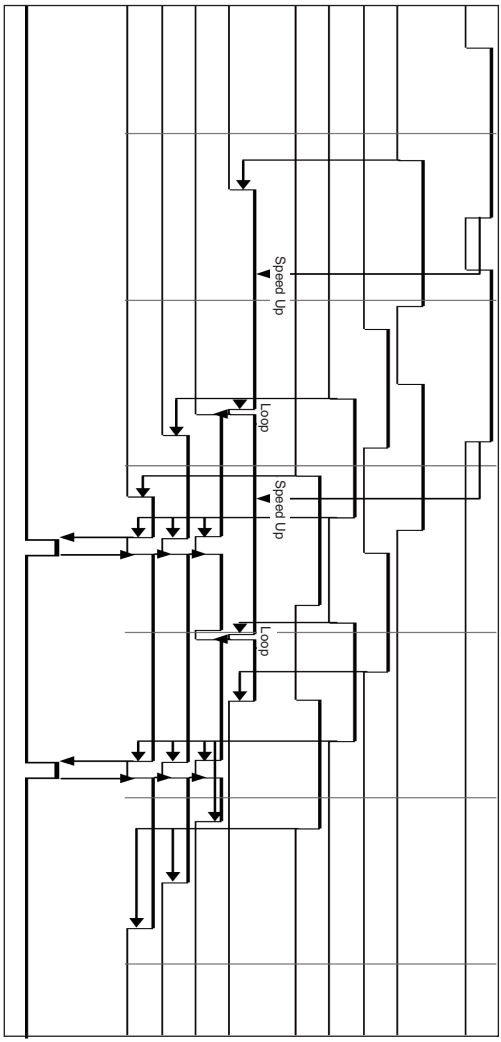

A0HRF5E511DA

30.4 JS-603

30.4.1 Tray3 paper exit mode

A. Operating conditions

- A4S or 8 $^1/_2$ x 11S/2 originals/1-side

B. Timing chart

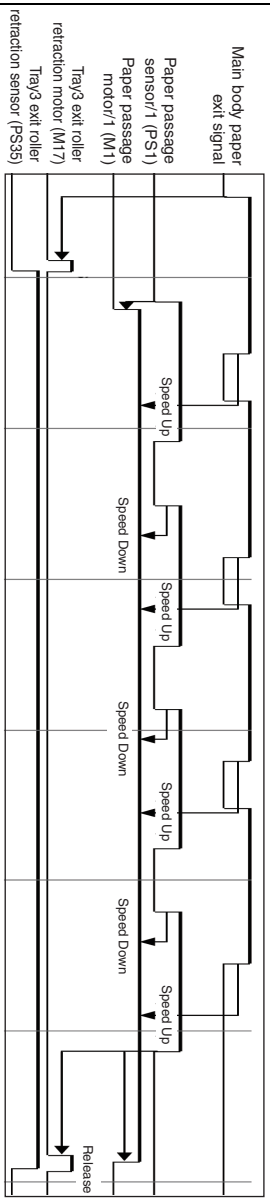

A10FF5E502DA

30.5 FS-529

30.5.1 Shift mode

A. Operating conditions

- A4S or 8 $^1/_2$ x 11S/Sort (shift)/2 originals/1-side

B. Timing chart

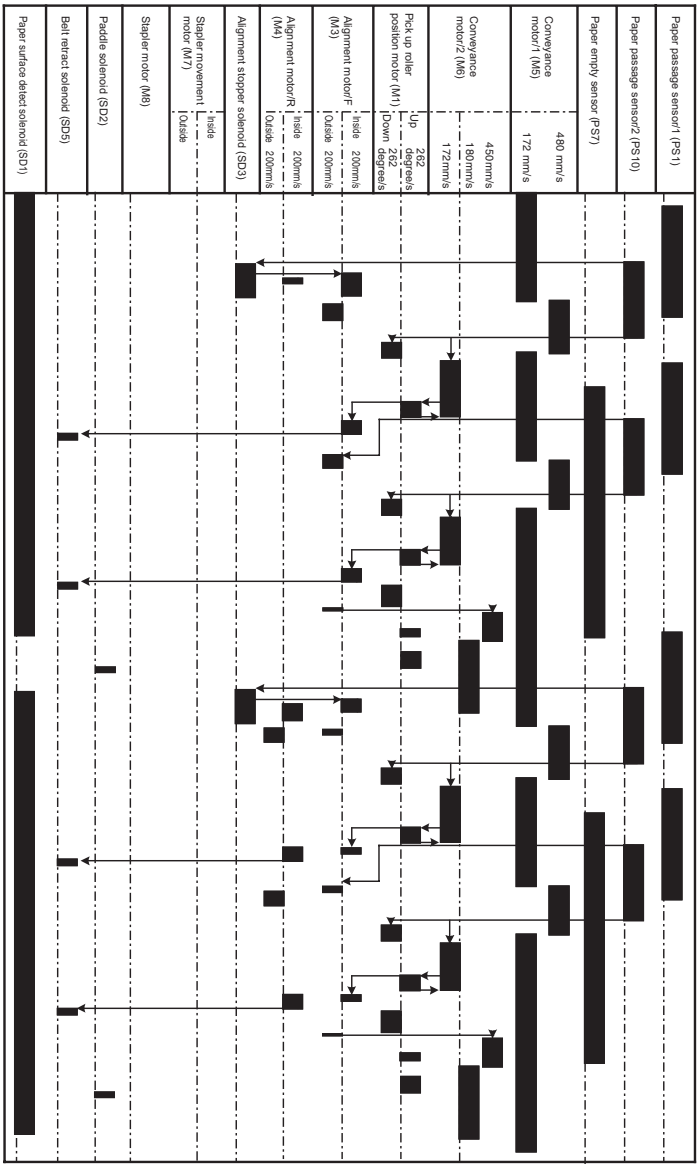

A0U7F5E506DA

30.5.2 1 flat stitching staple mode

A. Operating conditions

- A4S or 8 $^1/_2$ x 11S/Sort (shift)/2 originals/1-side

B. Timing chart

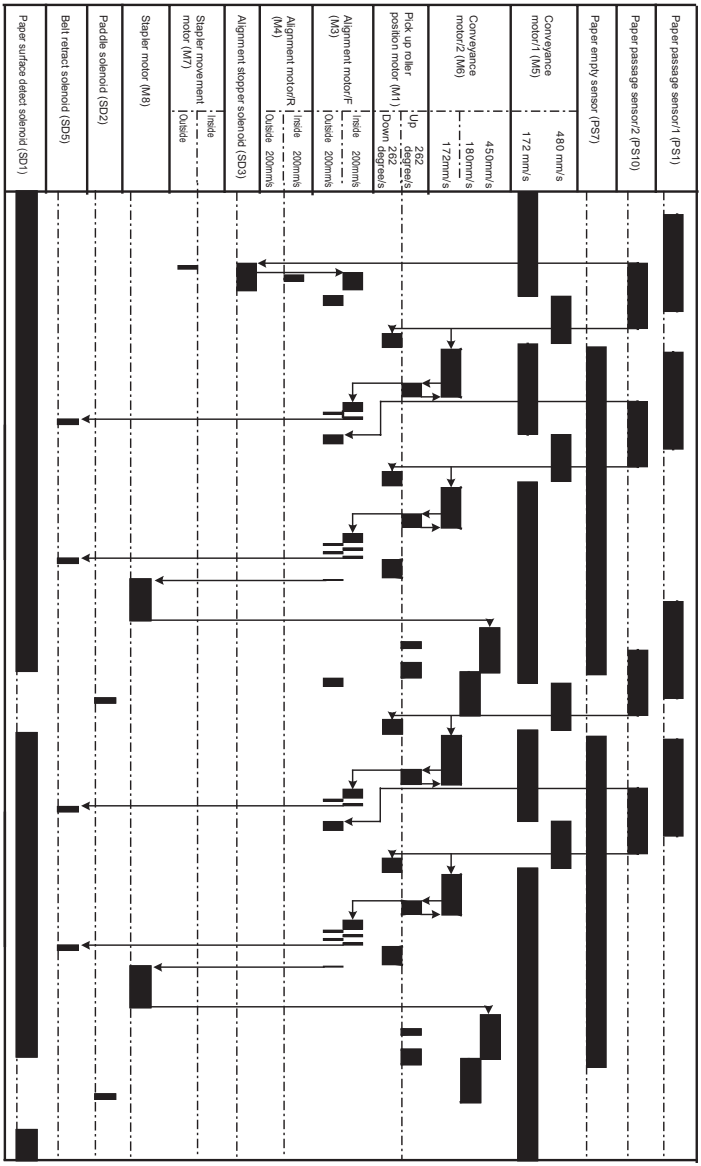

A0U7F5E507DA

30.5.3 2 flat stitching staples mode

A. Operating conditions

- A4S or 8 $^1/_2$ x 11S/Sort (shift)/2 originals/1-side

B. Timing chart

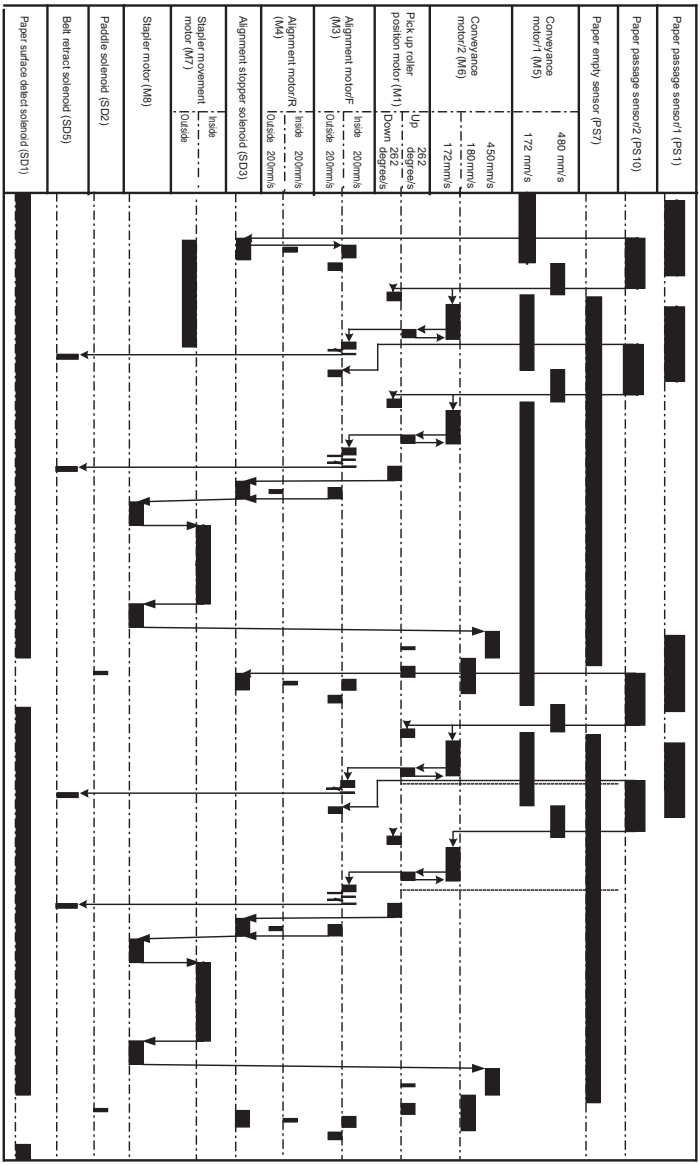

A0U7F5E508DA

Blank Page

KONICA MINOLTA

SERVICE MANUAL

FIELD SERVICE

i-Option LK-101 v2 /102 /103 v2/105

2012.02

KONICA MINOLTA BUSINESS TECHNOLOGIES, INC. Ver. 1.1

Revision history

After publication of this service manual, the parts and mechanism may be subject to change for improvement of their performance.
Therefore, the descriptions given in this service manual may not coincide with the actual machine.

When any change has been made to the descriptions in the service manual, a revised version will be issued with a revision mark added as required.

Revision mark:

- To indicate clearly a section revised, 1 is shown at the left margin of the revised section.
  The number inside 1 represents the number of times the revision has been made.

- To indicate clearly a specific page that contains a revision or revisions, the page number appearing at the left or right bottom of the specific page is marked with 1 .
  The number inside 1 represents the number of times the revision has been made.

NOTE

Revision marks shown in a page are restricted only to the latest ones with the old ones deleted.

- When a page revised in Ver. 2.0 has been changed in Ver. 3.0:
  The revision marks for Ver. 3.0 only are shown with those for Ver. 2.0 deleted.
- When a page revised in Ver. 2.0 has not been changed in Ver. 3.0:
  The revision marks for Ver. 2.0 are left as they are.

2012/02	1.1	1 1	Error corrections
2010/04	1.0	—	Issue of the first edition
Date	Service manual Ver.	Revision mark	Descriptions of revision

CONTENTS

i-Option LK-101 v2/102/103 v2/105

OUTLINE

1. PRODUCT OUTLINE 1
1.1 Available function for i-Option 1
1.2 Product specification 2
1.2.1 Web browser function 2
1.2.2 Photo registration function 2

ADJUSTMENT/SETTING

2. HOW TO USE THE ADJUSTMENT/SETTING SECTION 3
3. SERVICE MODE 4
3.1 Billing Setting function setting procedure 4
3.2 Billing Setting function tree 5
3.3 Settings in the License management 6
3.3.1 Activation 6
3.3.2 Deactivation 6
3.3.3 Repair 6
3.3.4 Initialize 6
3.3.5 Request Code 6
3.3.6 List 7
3.3.7 Function List 7
3.4 License Management function setting procedure 8
3.4.1 Activation 8
3.4.2 Deactivation 13
3.4.3 Repair 19
3.4.4 Initialize 25

Blank Page

OUTLINE

1. PRODUCT OUTLINE

1.1 Available function for i-Option

- The functions available for i-Option LK-101 v2/102/103 v2/105 are as follows.

Function	Overview	Application			
		LK-101 v2	LK-102	LK-103 v2	LK-105
Web browser	• From the control panel, access content on the Internet or Intranet, in order to display or print this content. Additionally, you can operate PageScope Web Connection to use documents saved in user boxes.	✓		✓	
Image panel	• This is a new control panel user interface. It enables the whole operation workflow to be easily grasped.	✓		✓	
Photo registration	• You can add photo data to a registered address book entry. Registered photos are reflected in the Destination List of the Image Panel.	✓		✓	
Assignment of application keys	• Enhanced function can be assigned to the application key.	✓	✓	✓	
PDF processing	• When transmitting documents in PDF format, you can encrypt PDF file with password or digital ID, add a digital signature, and specify properties.		✓	✓	
Searchable PDF	• You can create a text searchable PDF file by pasting transparent text data on the area of a document in which characters are recognized through an OCR process. You can create a searchable PDF file when saving or sending an original in the PDF format using the scan or User Box functions.				✓

1.2 Product specification

1.2.1 Web browser function

- Main specifications of the web browser installed are as follows.

Browser engine	NetFront
Supported protocols	HTTP, HTTPS, TCP/IP
Supported markup/script languages	HTML, CSS, JavaSrcript, Ajax
Supported image formats	JPEG, BMP, PNG, GIF, Animation GIF, PDF, XPS, Flash
Supported SSL/TLS versions	SSL2.0, SSL3.0, TLS1.0
Supported character codes	Western (ISO-8859-1), Unicode (UTF-8), Simplified Chinese (GB2312), Traditional Chinese (Big5), Japanese (Shift-JIS), Japanese (ISO-2022-JP), Japanese (EUC-JP)
Display modes	Normal, Just-Fit Rendering, Smart-Fit Rendering
PDF viewer	Adobe® Reader® LE
Flash player	Adobe® Flash® Player 7

NOTE
The Flash player installed on the MFP does not support the following:
- **The function to trigger an event caused by a key operation.**
- **The function to paste or acquire data such as character strings from the clipboard.**
- **The context menu.**
- **The Flash printing function.**
- **The function to execute JavaScript from Flash or to operate Flash by JavaScript.**
- **A screen that has no window (pop-up).**
- **The Flash bookmark function.**
- **The function to send/receive data in real time using the Flash Media Server.**
- **The function to communicate via the XMLSocket.**

1.2.2 Photo registration function

- Specifications of the photo data to be registered are as follows.

File type	BMP format, 24-bit color, uncompressed
Image size	48 x 48 pixels
Data size	6,966 Byte

ADJUSTMENT/SETTING

2. HOW TO USE THE ADJUSTMENT/SETTING SECTION

- “Adjustment/Setting” contains detailed information on the adjustment items and procedures for this machine.
- Throughout this “Adjustment/Setting,” the default settings are indicated by “ ”.

Advance checks

Before attempting to solve the customer problem, the following advance checks must be made. Check to see if:

- The power supply voltage meets the specifications.
- The power supply is properly grounded.
- The machine shares the power supply with any other machine that draws large current intermittently (e.g., elevator and air conditioner that generate electric noise).
- The installation site is environmentally appropriate: high temperature, high humidity, direct sunlight, ventilation, etc.; levelness of the installation site.
- The original has a problem that may cause a defective image.
- The density is properly selected.
- The original glass, slit glass, or related part is dirty.
- Correct paper is being used for printing.
- The units, parts, and supplies used for printing (developer, PC drum, etc.) are properly replenished and replaced when they reach the end of their useful service life.
- Toner is not running out.

⚠ **CAUTION**

- **To unplug the power cord of the machine before starting the service job procedures.**
- **If it is unavoidably necessary to service the machine with its power turned ON, use utmost care not to be caught in the scanner cables or gears of the exposure unit.**
- **Special care should be used when handling the fusing unit which can be extremely hot.**
- **The developing unit has a strong magnetic field. Keep watches and measuring instruments away from it.**
- **Take care not to damage the PC drum with a tool or similar device.**
- **Do not touch IC pins with bare hands.**

3. SERVICE MODE

- When using i-Option LK-101 v2/102/103 v2/105, license management is done with the following procedures. [Service Mode] → [Billing Setting] → [License Management]
- [License Management] can set Activation/Deactivation of each i-Option functions, Repair/Initialize of functions for troubleshooting, or etc.

3.1 Billing Setting function setting procedure

1. Press the Utility/Counter key.
2. Touch [Check Details] on meter count display.
3. Press the following keys in this order.; Stop → 0 → 0 → Stop → 0 → 1

NOTE

- **When selecting [CE Authentication] under [Enhanced Security] available from Service Mode, authentication by CE password is necessary.**
  Enter the 8 digits CE password, and touch [END].
  (The initial setting for CE password is "92729272.")
- **When the following setting is set to "ON", CE password authentication is necessary.**
  [Administrator Settings] → [Security Settings] → [Enhanced Security Mode]
- **If a wrong CE password is entered, re-enter the right password. The machine will not enter Service Mode unless the CE password is entered correctly. To return to the Basic screen, turn OFF the sub power switch and turn it ON again.**
  When the following setting is set to "Mode 2", operation will be prohibited since it indicates authentication failure by failing to enter the correct CE password within the specified number of times.
  if the access lock is activated, the lock release timer starts to operate by input the Stop → 0 → 9 → 3 → 1 → 7 in [Meter Count] → [Check Details] → [Coverage Rate] after the main power switch is turned OFF and On. When the timer reaches the time specified in this setting, the access lock is released.
- **The service code entered is displayed as "*."**

4. The Service Mode menu will appear.

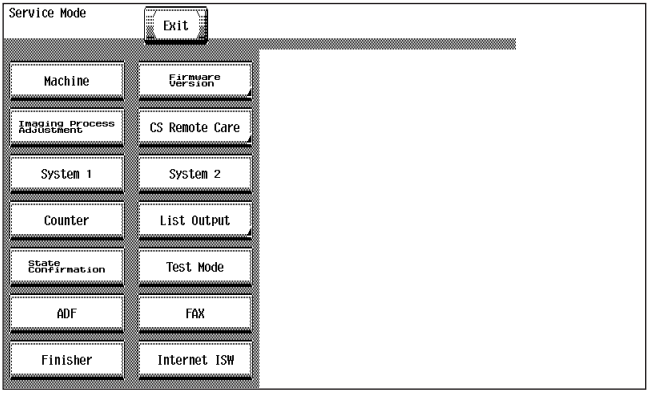

A00JF3E534DA

5. Press the following keys in this order.
   Stop → 9
6. Billing Setting menu will appear.

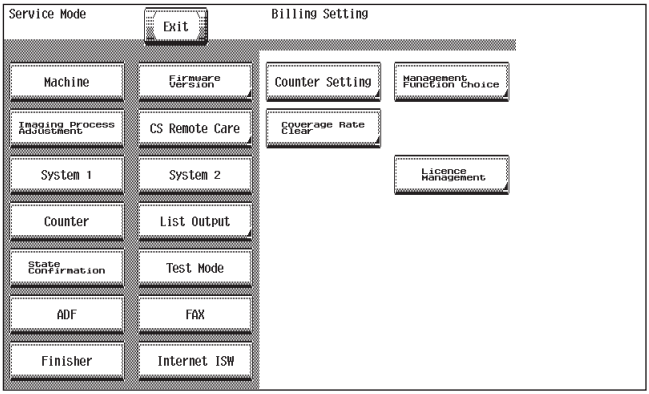

A00JF3E536DB

3.2 Billing Setting function tree

Service Mode			Ref. Page
Billing Setting	Counter Setting		*1
	Management Function Choice		
	Coverage Rate Clear		
	License Management *2	Activation *2	P.6
		Deactivation *2	P.6
		Repair *2, 3	P.6
		Initialize *2	P.6
		Request Code *2	P.6
		List *2	P.7
		Function list *2	P.7

*1: For details, see the main body service manual.
*2: It is displayed only when the expanded memory furnished with the optional upgrade kit UK-203 is mounted.
*3: It is displayed only when “license management error” occurs.

See P.750 of the main body service manual.

3.3 Settings in the License management

3.3.1 Activation

Functions	• To activate i-Option functions.
Use	• To activate i-Option functions with CE. • The functions can be activated by selecting the desired function and enter the appropriate license code and function code. • Administrators also can activate i-Option functions through Administrator Settings.
Setting/ Procedure	See P.8

3.3.2 Deactivation

Functions	• To deactivate i-Option functions.
Use	• To deactivate i-Option functions due to registration error, expiration of lease term, change to other MFP or etc. • The functions can be deactivated by selecting the desired function and enter the appropriate deactivation code.
Setting/ Procedure	See P.13

3.3.3 Repair

Functions	• To repair license management information.
Use	• To be used when license management information is lost due to replacement of NVRAM board (NRB) or EEPROM (IC51) or any other trouble. • License management information can be repaired by acquiring repair code with repair request code, and entering the repair code.
Setting/ Procedure	See P.19

3.3.4 Initialize

Functions	• To initialize license management information.
Use	• To be used when license management information cannot be repaired. • License management information should be initialized when the machine fails to generate request code or repair request code due to any trouble and the information cannot be repaired.
Setting/ Procedure	See P.25

3.3.5 Request Code

- When the license management error is occurred, it will not be displayed until the repair code is input.

Functions	• To display and print request code and serial number.
Use	• To check the request code and serial number.
Setting/ Procedure	• Set A4S or 8 $^1/_2$ x 11S paper to the tray, and press start key at request code screen to print.

3.3.6 List

Functions	• To display and print deactivation complete code and serial number.
Use	• To display and print deactivation complete code and serial number.
Setting/ Procedure	• Set A4S or 8 $^1/_2$ x 11S paper to the tray, and press start key at deactivation complete code screen to print.

3.3.7 Function List

Functions	• To display activated functions.
Use	

3.4 License Management function setting procedure

- Each setting procedure of License Management function is as follows.
- You need to access License Management System (LMS) to implement each function setting.

NOTE

- **Before accessing the LMS, CE are required to register the E-mail address and the password in the LMS. To register, click [CE Initial Registration] that is located in the upper right of CE Login screen.**

3.4.1 Activation

1. Prepare “token certification.”
2. Access the following URL using the PC connected to the Internet.
   https://lms.konicaminolta.com/license/KM/support.aspx
3. Click [CE Login].

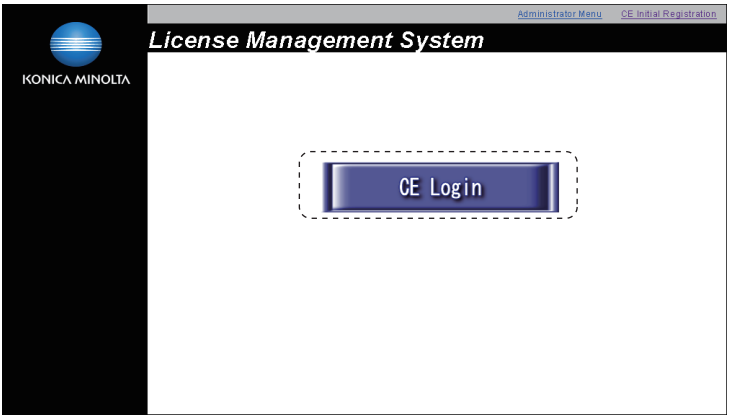

A0EDF3C551DA

4. Enter [E-Mail Address] and [Password], and click [Login].

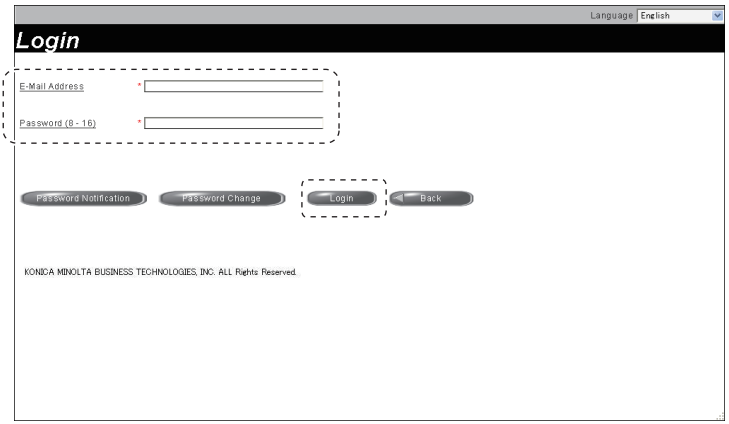

A0EDF3E562DA

5. Click [Generate License Code].

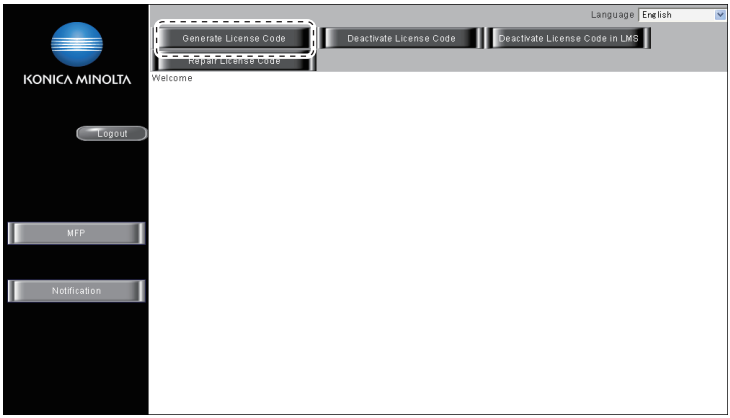

A0EDF3E563A

6. Enter the serial number of the target MFP, and click [Next].

NOTE

- **Make sure to enter alphabet letters of the serial number in all capital letters.**

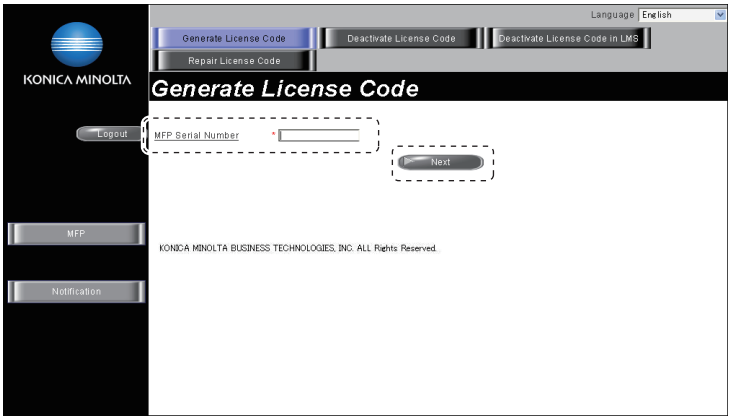

A0EDF3E564A

7. Click [Next].

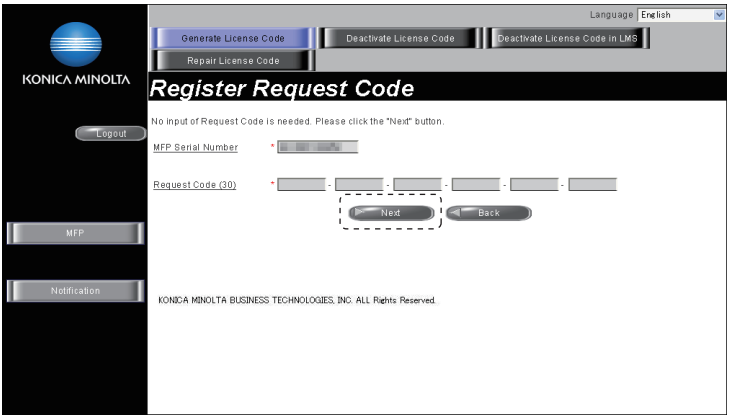

A0EDF3E565A

8. Enter the token number written in the token certification, and select the product description.
9. Click [Add].

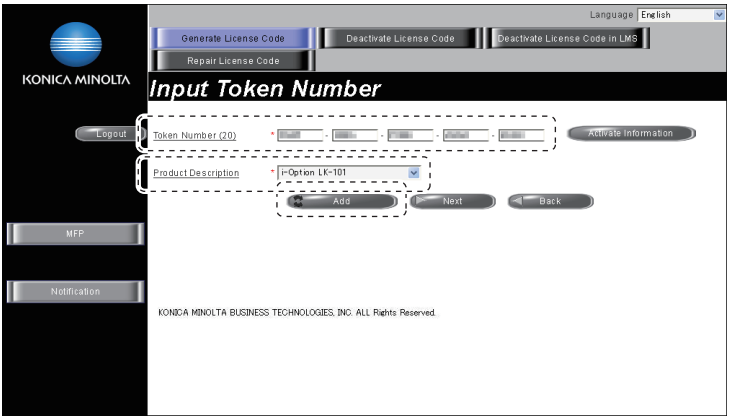

A0EDF3E566A

10. Confirm the registered items, and click [Next].

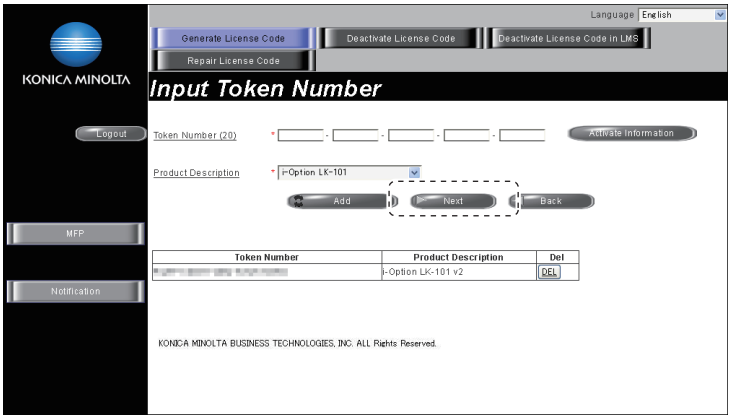

A0EDF3E567DA

11. Click [Generate license Code].

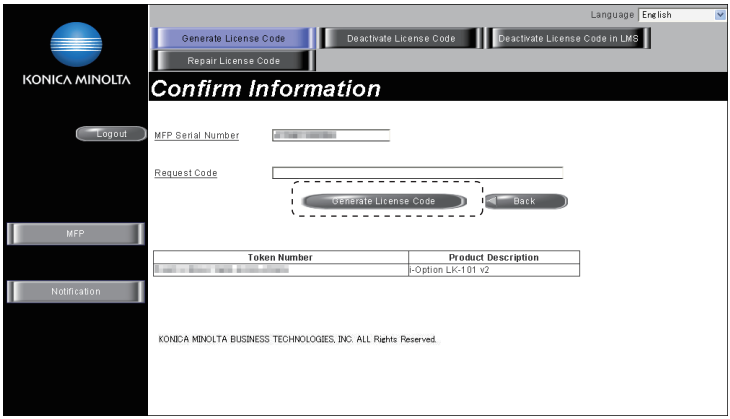

A0EDF3E568DA

12. LMS issues license code and function code.

13. Write down the serial number, license code and function code.

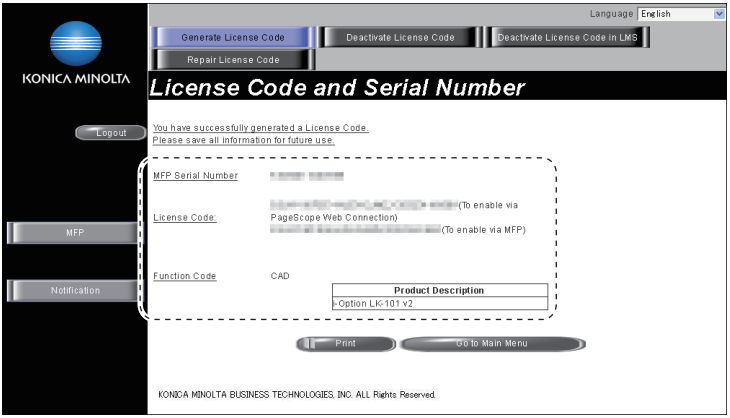

A0EDF3E569DA

14. Select [Service Mode] → [Billing Setting] → [License Management].

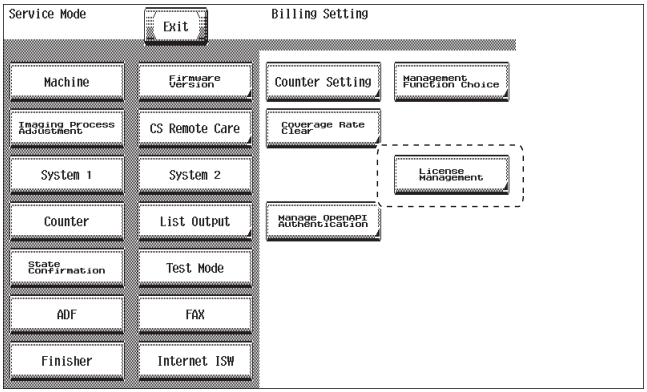

A0EDF3E570DA

15. Select [Activation] → [Function Code] or [License Code], and enter the function code and the license code confirmed at Step13.
16. Touch [Apply].

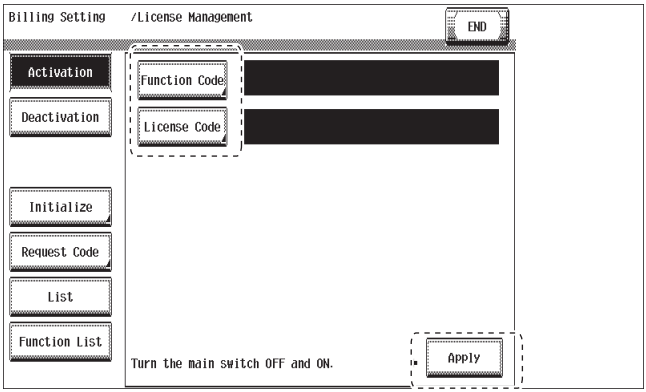

A0EDF3E571DA

17. Follow the massage appearing on the screen and turn OFF and ON the main power switch and the sub power switch.
18. Select [Service Mode] → [Billing Setting] → [License Management] → [Function List], and confirm that the activated function is displayed at the list.

3.4.2 Deactivation

1. Check the serial number of the target MFP.
2. Access the following URL using the PC connected to the Internet.
   https://lms.konicaminolta.com/license/KM/support.aspx
3. Click [CE Login].

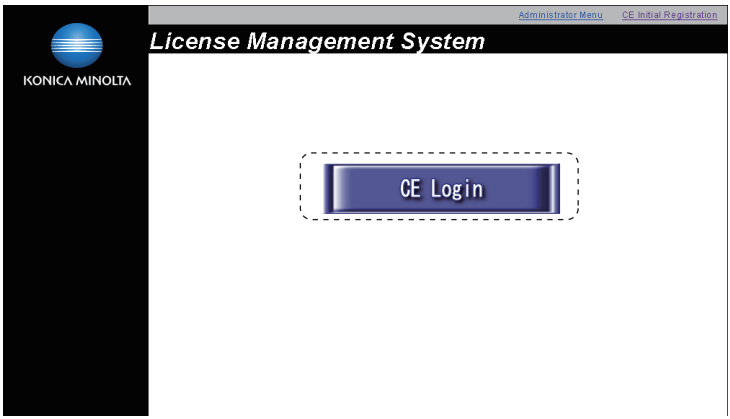

A0EDF3C551DA

4. Enter [E-Mail Address] and [Password], and click [Login].

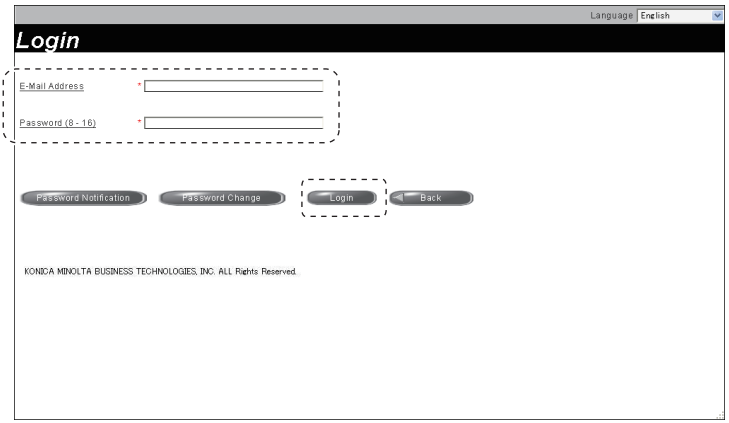

A0EDF3E562DA

5. Click [Deactivate License Code].

A0EDF3E580DA

6. Enter the serial number of the target MFP, and click [Retrieve].

NOTE

- **Make sure to enter alphabet letters of the serial number in all capital letters.**

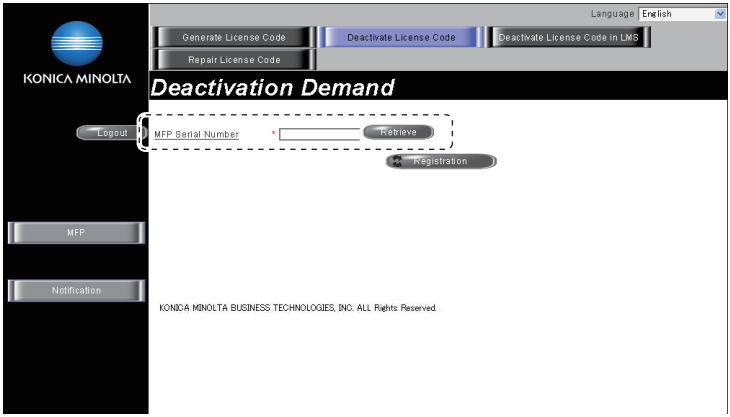

A0EDF3E581DA

7. Select the token to be deactivated, and click [Registration].

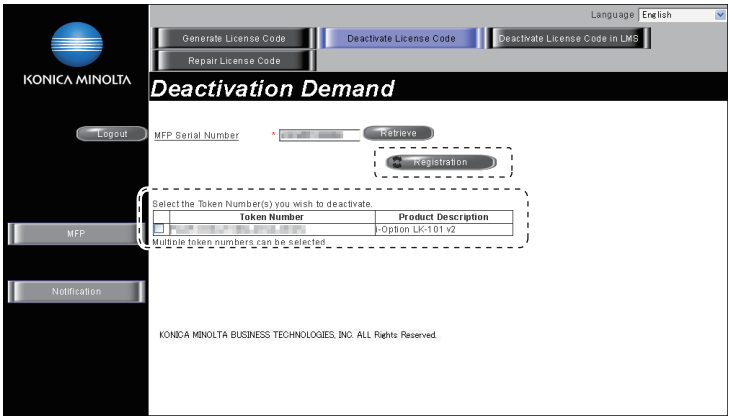

A0EDF3E582DA

8. LMS issues deactivation code and function code.

9. Write down the serial number, deactivation code and function code.

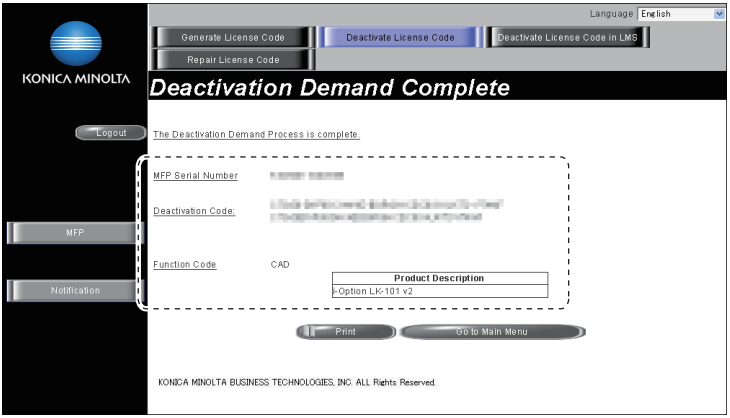

A0EDF3E583DA

10. Select [Service Mode] → [Billing Setting] → [License Management].

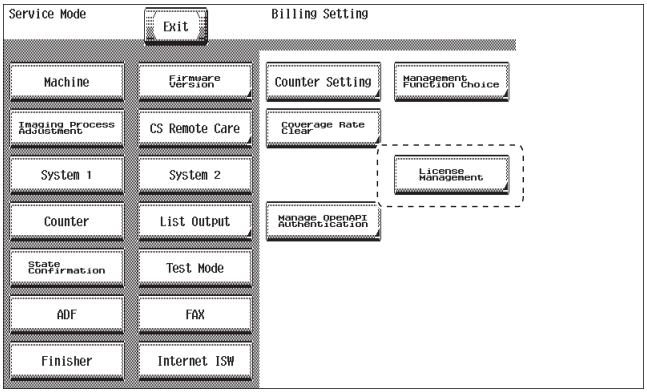

A0EDF3E570DA

11. Select [Deactivation] → [Function Code] or [Deactivation Code], and enter the function code and the deactivation code confirmed at Step9.

12. Touch [Apply].

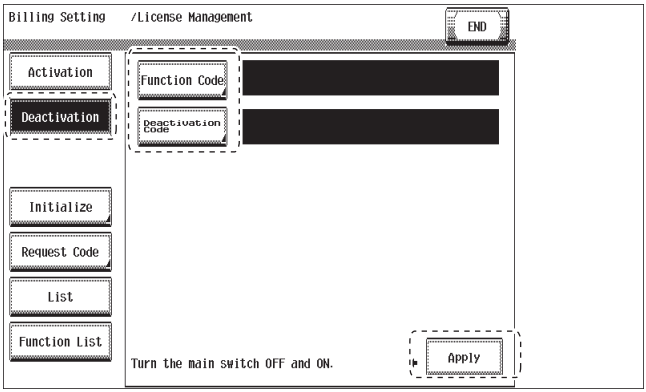

A0EDF3E584DA

13. Write down or print out the serial number and deactivation complete code.

NOTE

- **When A4S or 8 $^1/_2$ x 11S is set to the paper feed tray, the above-mentioned serial number and deactivation complete code can be printed out by pressing the start key.**
- **Serial number and deactivation complete code can be confirmed in [List] available from [License Management].**

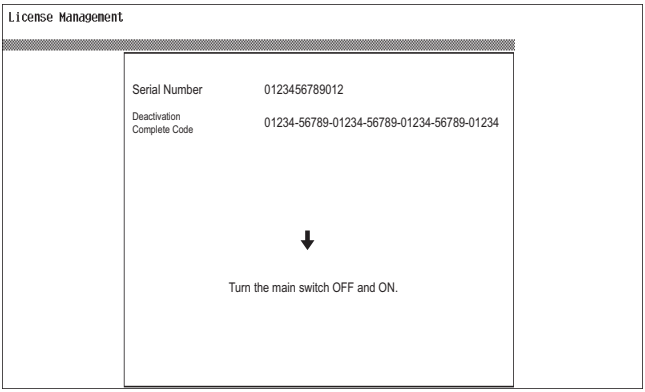

A0EDF3E585DA

14. Follow the message appearing on the screen and turn OFF and ON the main power switch and the sub power switch.

15. Access to the LMS and login again.
For detail of the login method, refer to step 2 to step4.

16. Click [Deactivate License Code in LMS].

17. Enter the serial number and the deactivation complete code confirmed at step13.

NOTE

- **Make sure to enter alphabet letters of the serial number in all capital letters.**

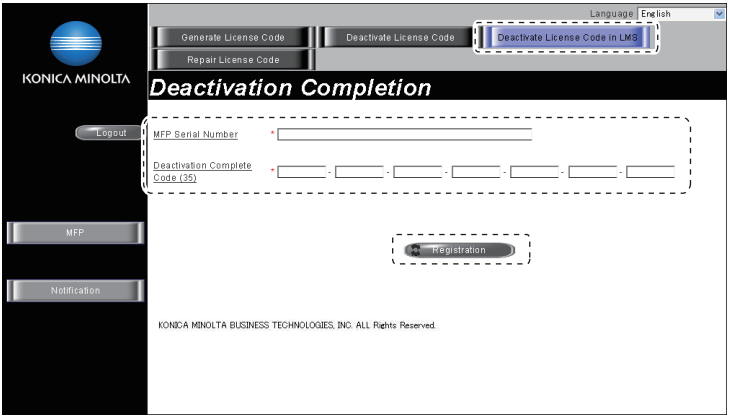

A0EDF3E586DA

18. “Deactivation Complete” message will be displayed.
The license become invalid at both MFP and LMS, and deactivated token number can be used for another MFP.

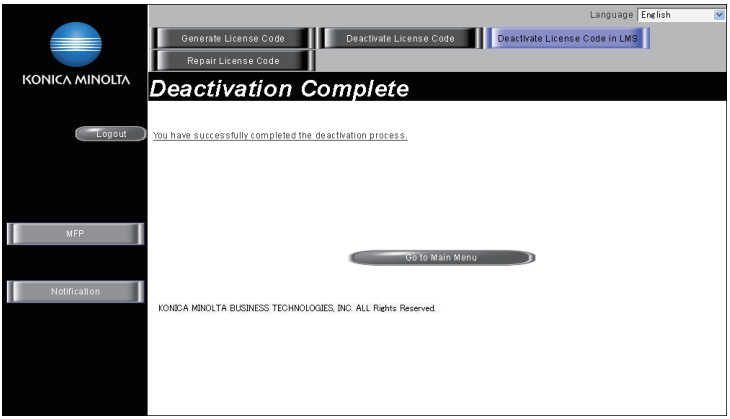

A0EDF3E587DA

3.4.3 Repair

- When the message “License management error occurred.” is displayed, carry out the repair operation with the following steps.

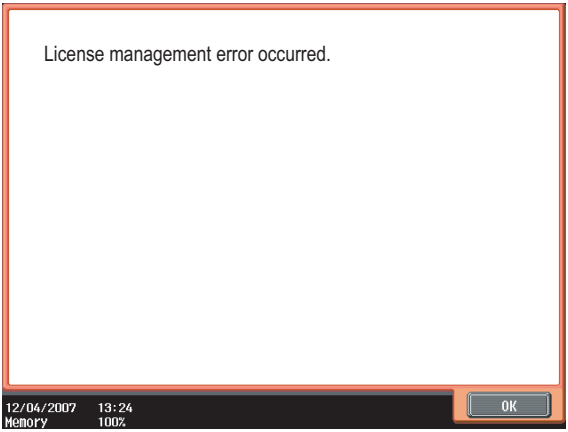

A0PDF4E502DA

1. Select [Service Mode] → [Billing Setting] → [License Management].

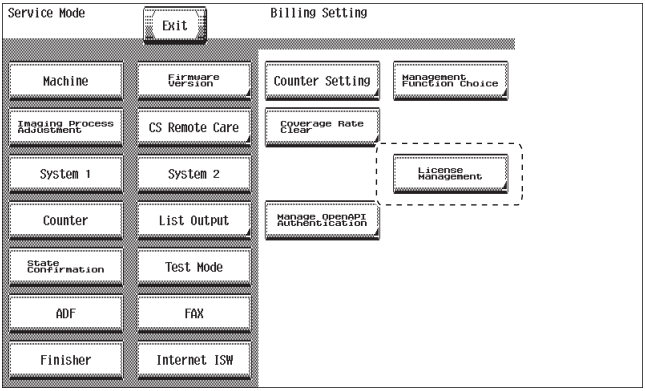

A0EDF3E570DA

2. Select [Repair] → [Repair Request Code].

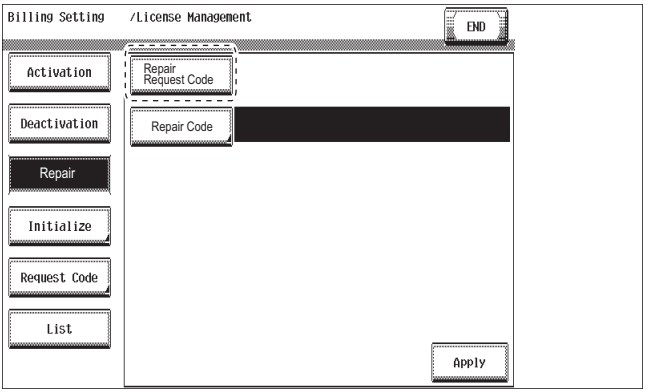

A0EDF3E599DA

3. Write down or print out the serial number, repair request code and request code.

NOTE

- **When A4S or 8 $^1/_2$ x 11S is set to the paper feed tray, the above-mentioned serial number and repair request code can be printed out by pressing the start key.**

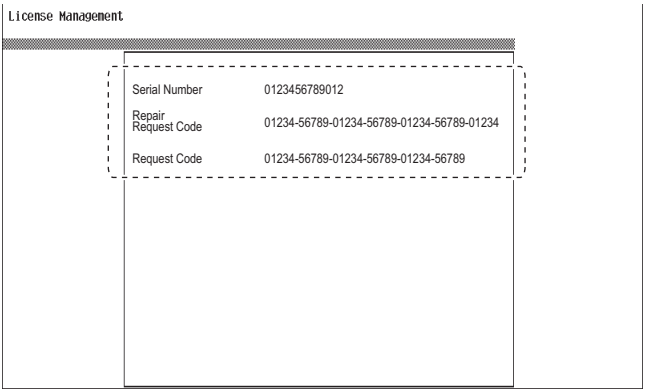

A0EDF3E600DA

4. Access the following URL using the PC connected to the Internet.
   https://lms.konicaminolta.com/license/KM/support.aspx
5. Click [CE Login].

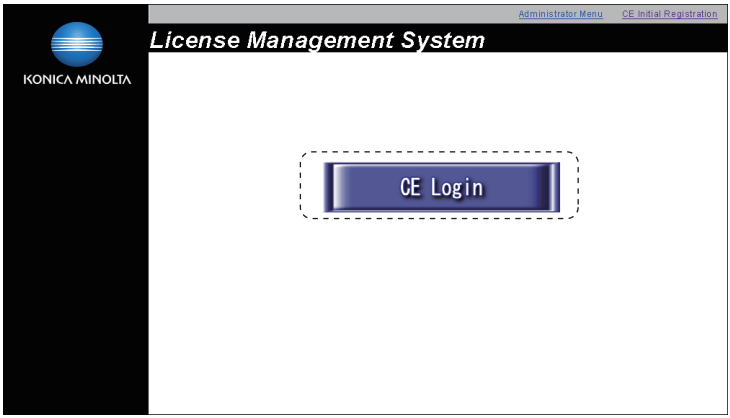

A0EDF3C551DA

6. Enter [E-Mail Address] and [Password], and click [Login].

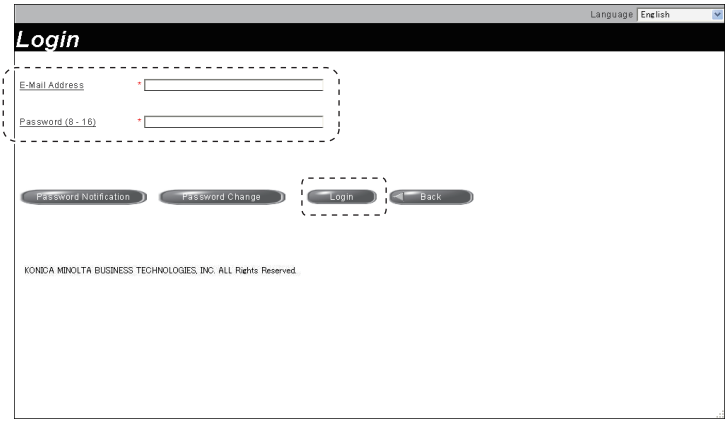

A0EDF3E562DA

7. Click [Repair License Code].
8. Enter the serial number, repair request code and request code confirmed at step3, and click [Registration].

NOTE

- **Make sure to enter alphabet letters of the serial number in all capital letters.**

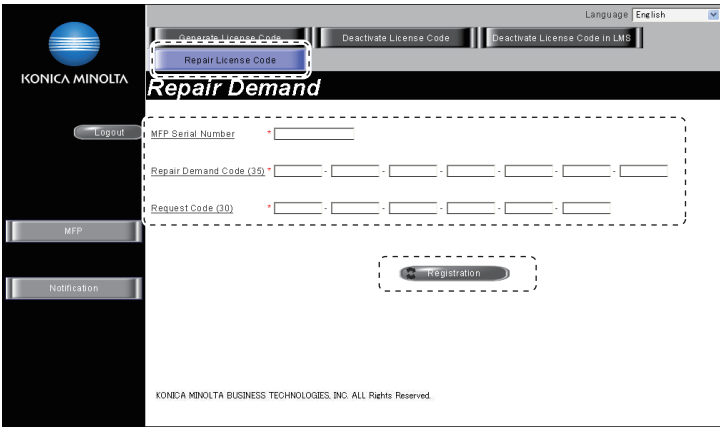

A0EDF3E601DA

9. LMS issues repair permission code.
10. Write down the serial number and repair permission code.

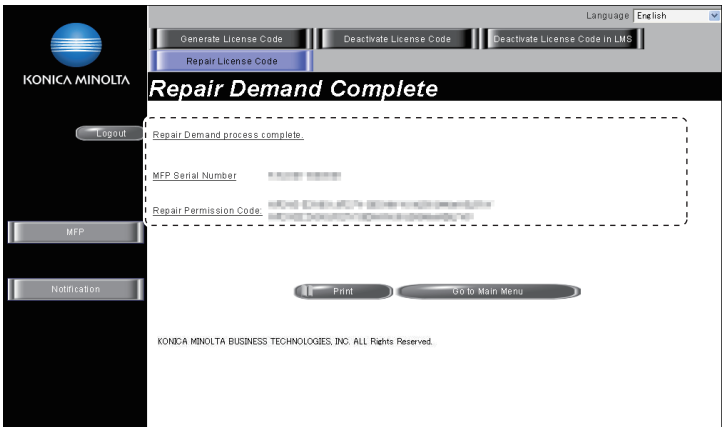

A0EDF3E602DA

11. Select [Service Mode] → [Billing Setting] → [License Management].

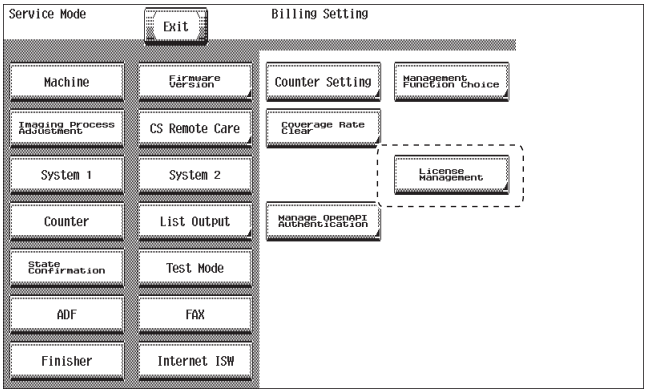

A0EDF3E570DA

12. Select [Repair] → [Repair Code], and enter the repair code confirmed at step10.

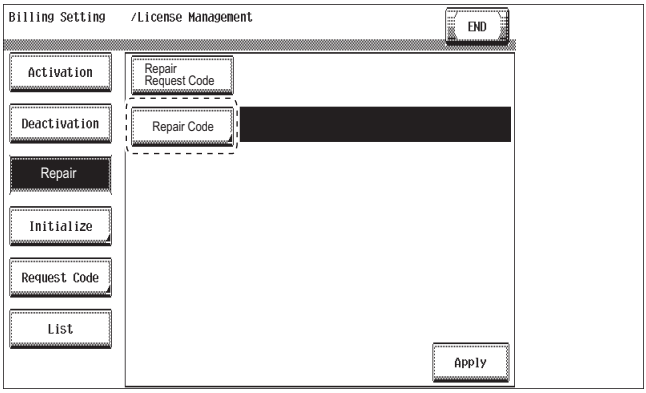

A0EDF3E603DA

13. Touch [Apply].

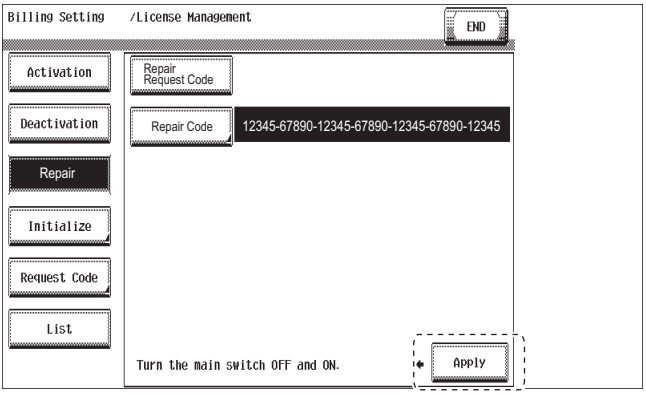

A0EDF3E604DA

14. Follow the massage appearing on the screen and turn OFF and ON the main power switch and the sub power switch.

NOTE

- **When carrying out the repair operation after NVRAM board replacement, it is necessary to reactivate the i-Option license.**
  See P.8

3.4.4 Initialize

- When license management information cannot be repaired, initialize the information with the following procedure.

1. Contact the license management section of sales company to report the information necessary to issue the initialize code.
2. The license management section of sales company supplies the initialize code.
3. Call the Billing Setting to the screen.
   See P.4
4. Touch [License Management] → [Initialize].
5. Enter the initialize code issued by call center using the keyboard on the screen, and touch [Apply].

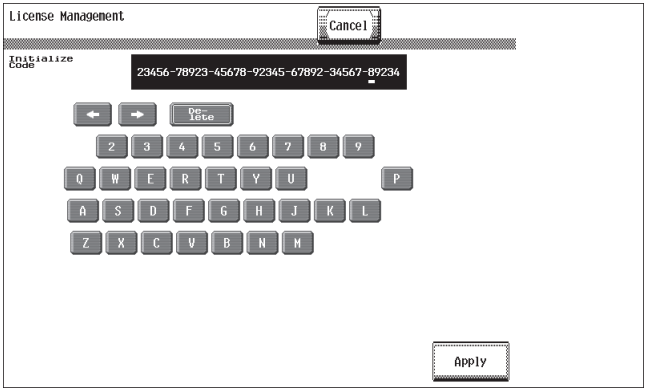

A0PDF3E541DA

6. After completing the initialization, follow the message appearing on the screen and turn OFF and ON the main power switch.

Blank Page

KONICA MINOLTA

SERVICE MANUAL

FIELD SERVICE

FK-508

2010.04

KONICA MINOLTA BUSINESS TECHNOLOGIES, INC. Ver. 1.0

Revision history

After publication of this service manual, the parts and mechanism may be subject to change for improvement of their performance.
Therefore, the descriptions given in this service manual may not coincide with the actual machine.

When any change has been made to the descriptions in the service manual, a revised version will be issued with a revision mark added as required.

Revision mark:

- To indicate clearly a section revised, ⚠1 is shown at the left margin of the revised section.
  The number inside ⚠1 represents the number of times the revision has been made.

- To indicate clearly a page that contains the revision, ▲1 is shown near the page number of the corresponding page.
  The number inside ▲1 represents the number of times the revision has been made.

NOTE

Revision marks shown in a page are restricted only to the latest ones with the old ones deleted.

- When a page revised in Ver. 2.0 has been changed in Ver. 3.0:
  The revision marks for Ver. 3.0 only are shown with those for Ver. 2.0 deleted.
- When a page revised in Ver. 2.0 has not been changed in Ver. 3.0:
  The revision marks for Ver. 2.0 are left as they are.

2010/04	1.0	—	Issue of the first edition
Date	Service manual Ver.	Revision mark	Descriptions of revision

CONTENTS

FK-508

OUTLINE

1. OUTLINE OF THE DEVICE 1
1.1 Basic specifications 1
1.1.1 General specifications 1
1.1.2 Scanning section 2
1.1.3 Recording section 3
1.1.4 Line connecting section 4
1.1.5 Operation panel 4
1.2 Functional specifications 5
1.2.1 Dial functions 5
1.2.2 Transmission 6
1.2.3 Polling 8
1.2.4 Line seizure mode and telephone function 8
1.2.5 Message reception and record 9
1.2.6 Memory function 9
1.2.7 Various communication function 9
1.2.8 User lists / reports 10
1.2.9 Other user functions 11
1.3 Network fax specifications 12
1.3.1 Internet fax 12
1.3.2 IP address fax 13
1.4 Inhibited combinations 15
1.5 Caution when using prefix/suffix auto setting (North American users only) 17
2. COMMUNICATION CONTROL 18
2.1 Protocol 18
2.1.1 FIF bits of DIS, DTC and DCS 18
2.1.2 Modem fallback sequence 29
2.1.3 V8/V34 sequence 29
2.2 Telephone function 43
2.2.1 TEL/FAX switching 43
3. EXPLANATION OF FUNCTIONS 45
3.1 F-code 45
3.1.1 Signal format 46

3.1.2 F-Code confidential transmission 46
3.1.3 F-code bulletin board polling 48
3.1.4 F-code relay transmission 49
3.2 Transmission function 50
3.2.1 Original scan mode 50
3.3 Reception function 51
3.3.1 Reduction / division of reception 51
3.3.2 Cassette / paper selection 52
3.3.3 Compulsory memory reception 52
3.3.4 Closed reception (Junk FAX) 53
3.4 Management function 54
3.4.1 Operation without the key counter 54

MAINTENANCE

4. OTHER MAINTENANCE ITEM 55
4.1 Items not allowed to be disassembled and adjusted 55
4.2 Disassembly/reassembly parts list 56
4.3 Disassembly/reassembly procedure 56
4.3.1 FAX board 56
4.3.2 FAX board (Extension line) 57
4.4 Configuration of the FK-508 board 59

OUTLINE

1. OUTLINE OF THE DEVICE

1.1 Basic specifications

1.1.1 General specifications

Applicable lines	PSTN, PBX	
Protocol	Group 3 (compliant to ITU-T T.30) • ECM • F-code communication • Konica Minolta non-standard protocol: No • Group 4: No	
Maximum data rate	33,600 bps	
Coding method	MH, MR, MMR and JBIG	
Modulation method	V27ter, V29, (V.33), V17, V8 and V34 • V.33 is for reception only.	
Communication resolution	Normal	8 x 3.85 lines / mm
	Fine	8 x 7.7 lines / mm 200 x 200 pixels / inch
	Super fine	8 x 15.4 lines / mm (Reception only) 16 x 15.4 lines / mm 400 x 400 pixels / inch
	Ultra Super fine	600 x 600 pixels / inch
	• Fixed to mm at transmission (except 600 dpi) • mm and inch are available at reception. • Selection by using the [Resolution] key. • You can not change settings on every page.	
Fax memory size	With HDD installed	128 GB (128 GB in the main body HDD 250 GB is used as a memory.) 10000 pages can be stored including all Scan/Box/Printer/Fax documents.
	With no HDD installed	Approx. 200 pages can be saved at 240 MB of image memory capacity.
FAX memory backup	With HDD installed	Image data is saved in HDD.
	With no HDD installed	The image data is saved on the RAM disk which is backed up with the battery on the copier side. Back-up time is less than 60 minutes (at full-charge).
Multiple line connection	Two lines can be connected by installing the Line Extension kit.	
Communication time	Level of 2 seconds (Konica Minolta standard A4 chart, 33,600 bps)	

Resolution conversion	

At sending	Scanner	Density conversion	Communication
	inch	inch → mm	mm / inch (600 dpi only)
At receiving	Communication	Density conversion	Print
	mm	mm → inch	inch
	inch	inch → inch	inch

1.1.2 Scanning section

Scanning method	Platen documents	Impossible to scan book documents (book mode)
	ADF book documents	• Scanning mode: 1-Sided, 2-Sided and cover + 2-Sided • Possible to scan the ADF mixed size documents.
Scanning resolution	Normal	8 x 3.85 lines/mm
	Fine	8 x 7.7 lines/mm
	Super fine	16 x 15.4 lines /mm
	Ultra Super fine	600 x 600 dpi
	• Selection by using the [Resolution] key. • You can not change settings on each page.	
Mixed original	Possible to mix documents of different sizes. • After rotation of images, sizes are changed by EOM every time the length of the scan line is changed at sending. • Possible to mix sizes (A and B).	
Density selection	Selection by using the [Density] key. [Light] / [Dark] / [Standard] • You can not change settings on each page.	
Maximum scanning document width	297 mm (A3 width) both for ADF and Platen	
Maximum scanning document length	432 mm (A3 length) / 17 inches (double letter) in the regular mode 1000 mm in the long original mode	
Effective scanning range	When a document is smaller than the effective scanning area, the area outside the document is erased. • ADF scanning: left, right, head and bottom mask of 3mm each (0 to 5mm) • Platen scanning: left, right and head mask of 2mm each (fixed)	
Automatic reduction at sending	A3 → B4, A3 → A4 and B4 → A4 • Automatically reduced and sent in accordance with the recording paper size of remote station.	
Rotation transmission	A4 / Letter size only. LEF documents are rotated by 90 degrees at sending to send it in SEF direction.	
Page division at sending	No	
Halftone	256 level error diffusion • Users can change settings by using the [Photo], [Text], [Text/Photo], [Dot Matrix Original] or [Copied Paper] key.	
Automatic background control (ABC)	Yes	
Finished stamp	Yes	

Scanning time	42 sheets/min (A4, 600 dpi) 70 sheets/min (A4, 300 dpi)
Automatic feeder capacity	Compliant to the copier standards

1.1.3 Recording section

Recording	Compliant to the copier standards
Recording paper size	All sizes except for B6 and Postcard (See the copier basic specifications.) Auto recording paper selection Note: A5 and B5 paper is used only for A5 and B5 reception respectively
Recording paper cassette	Tray 1 to Tray 4, bypass Tray
Staple	No
Recording speed	Compliant to the copier standards
Recording size	A3 size maximum • A3 fix as reception record ability declaration in protocol.
Maximum reception length	1000 mm • In case of being larger than the maximum reception length, a communication error occurs. • When the memory over occurs during reception, the received data is printed.
Reduction record	When the received image information is larger than the recording paper, it is automatically reduced to the recording paper size and recorded.
Page separation record	Yes
Offset output at each communication	Yes (Job unit reception only)
Rotation reception	Yes • Images are rotated by 90 degrees and recorded on the recording paper in LEF direction.
Two-sided reception	Yes (Utility Mode)
2-in-1 reception	No
Smoothing	Yes (at converting the resolution)
Print/Fax output settings	Yes
Bypass print	Possible to use as an active tray in auto selection mode.
Total page counter	Compliant to the copier standards
Monitor print	No (copy at sending)

1.1.4 Line connecting section

NCU type	A-A~, line control by silicon DAA
Connecting terminal	RJ11
Modem	Matsushita MMD-5020
Modem sending level	-10 to -15 dBm (Country spec)
DTMF sending level	-10 to -15 dBm (Country spec)
Receiving sensitivity	G3 reception: up to -48 dB Tone reception: up to -52 dB
Dialing signal	DP (10pps) and DTMF

1.1.5 Operation panel

FAX / copy / scan / box	Mode switching	by panel key selection • Possible to change modes during an operation of each mode. • No mode return by the auto reset.
	Initial screen after power-on	Screen at power off or facsimile screen. (depending on parameter setting)
Interruption during scanning	When pressing the interrupt button while scanning documents to be transmitted, INTERRUPT LED blinks. Copy screen appears after scanning is completed.	
Interruption during recording in the FAX mode screen	Operations by using the interrupt button are invalid.	
FAX start	by using the start button.	
Stop	by using the stop button. • Possible to appoint to stop from the job list so as to stop during operations of the multi jobs.	
FAX free memory display	RDH memory • % indication on LCD during scanning, recording and stand-by. File memory (RAM disk/HDD) • Display in the JOB LIST screen	
File existence indication	In the following cases, the data Indicator (LED) on the control panel lights up. • Upon reception of FAX • When a document is saved in the bulletin board box, polling TX box, and memory RX user box.	
Display during the FAX communications	Icons are not displayed on the FAX waiting screen and the FAX operation screen.	
Error display	Displayed by LCD panel	
Time display	Date and time displayed. • Present time is displayed on the sub-area.	
Remote station ID display	Yes • The TSI/CSI display during communications	
Other operation buttons	[Scan Settings], [Communication Settings] key: Moves to the FAX application function setting screen. Mode Check button: Valid */# button: Yes Help button: Yes	

1.2 Functional specifications

1.2.1 Dial functions

Abbreviated dial	Yes • Possible to register 2000 stations. (1000 with no optional HDD installed) • 38 digits maximum • Possible to search the remote station list in the order of abbreviation numbers and Indexes. • The registration names must be 24 digits or less. • Registration name auto registration function: No • Second FAX No. registration function: No • Impossible to register the communication mode. • Possible to register Line Setting (Overseas TX, ECM Off, V.34 OFF, check destination, line selection (Only with the line extension kit installed)). • There is no registration function provided of [Scan Setting], [Comm. Setting] except the line setting.
Program dial	400 dials (200 with no optional HDD installed)
Key pad dial	38 digits maximum
Group dial	Up to 100 groups. Possible to register group names. up to 500 remote stations per each group by abbreviated numbers only.
Dialing of multiple remote stations	605 remote stations maximum (abbreviated 500 + key pad 100 + manual input e-mail destination 5)
Manual redial	Yes • Possible to select from five latest histories.
Automatic redial	Yes • Automatically redial when remote stations are busy or return no responses or transmission errors occur at the memory transmission • Possible to receive during redial waiting. • Another call is possible. (Not possible when there are two redial waiting jobs.)
JOB LIST redial	No
Pulse/tone switching	Possible to switch by using the [*] key on the key pad or [Tone] key on the Direct Input screen.
PBX mode setting	Yes • Possible to turn ON or OFF the PBX connection and to register the external access code. • There is the automatic removal function of external access code to registered abbreviated remote station No. Nothing is automatic addition function.
Pseudo off-hook	Yes • The manual start is possible by using the pseudo off-hook. • [Off-Hook] button on LCD
Call progress detection	DC loop (Depends on country spec). • Dial tone (Ditto) • Busy tone (Ditto) • Second dial tone (Ditto)
Dial parameters	Dialing signals DP (10 pps) and DTMF (Depends on country spec) • Pause between digits1 to 7 seconds (Users cannot set.) • Pause between digits 3 seconds (fixed)
Phone book dial (Abbr)	Yes • After appointing character to search, use up and down cursor keys.
External phone connection jack	Yes • Depends on specifications of each country.

1.2.2 Transmission

Timer transmission	24-hour (max.) timer setting is possible. (one station, sequential multi-stations transmission)		
Batch transmission	No		
Timer polling	24-hour (max.) timer setting is possible. (one remote station polling and sequential polling reception)		
No. of timers	21 transmissions and pollings in total. The number of sequential pollings is one.		
Memory transmission reservation	The memory transmission reservation is possible during communications. (memory registration of the ADF memory transmission and platen memory transmission documents)		
ADF transmission reservation	No		
Fold erase transmission	No		
Frame erase transmission	Yes • Platen documents and book documents • ADF documents are possible as well. • The regular mode only		
Automatic layout transmission (Outside documents are erased.)	No		
Reverse-image transmission	No		
2-in-1 transmission	No		
Book transmission	No		
Scanning size appointment	Yes • Scans documents in the appointed size irrelevant to document sizes and sends them. Transmits documents in the appointed scanning width and length at the platen transmission and the ADF transmission. • The effective image area is based on the center in the ADF transmission. (Corner-base scanning in mixed-size document mode.)		
Document image quality appointment	Yes • Selected from Text, Text/Photo, Photo, Dot Matrix Original or Copied Paper.		
Multi-stations	605 stations maximum (Abbr dial x 500 stations, keypad dial x 100 stations and E-Mail x 5) The timer appointment is possible.		
Memory transmission	Yes		
	Quick memory transmis-sion	ADF transmission	Varies depending on models.
		Platen transmis-sion	One page only

Memory transmission	Quick memory transmission	Mixture of ADF/ platen documents	No
		Advanced communication function	Partly Yes (Only the communication mode is possible)
		Manual transmission	Yes
		Transmission when the printer is active	No
	Memory transmission	ADF transmission	Yes
		Platen transmission	Yes After the Separate Scan setting, the setting is read with the [Start] key and the communication is started up with the [Finish] key.
		Mixture of ADF/ platen documents	Yes After the Separate Scan setting, the setting is read with the [Start] key and the communication is started up with the [Finish] key.
		Advanced communication function	Yes
		Manual transmission	No
		Transmission when the printer is active	Yes
Forwarding transmission	Yes • Automatic forward: Automatic forward of received documents to remote stations registered in advance. • Manual forward: No		
Interruption transmission	Single station transmission reservation automatically interrupts between stations of multiple station communications.		
International communication	Yes • When the remote station is V17, communications start at TCM 7,200 bps. When the remote station is V34, they start at 28,800 bps.		
V34-off transmission	Transmitted without V34 mode. The V34-off appointment can be registered in the abbreviated / program dials. This is used when the transmission error code related to V34 occurs frequently.		
Long original transmission	Yes		
ADF irregular-size transmission	Possible to transmit irregular-size originals from ADF. The main scanning is the max. document width set on ADF, and the sub scanning depends on document length. Width: 297 mm/11.69 inch at the maximum Length: 1000 mm/39.37 inch at the maximum		
Incomplete TX hold	Yes		
Instant batch transmission (Bundled transmission)	No		

Confidential transmission	Transmission to the confidential BOX of a remote station by using the F code (SUB/SID). Appoints the confidential BOX No. by using SUB. Set the communication password using SID as required.
Relay request	The relay request by using the F-code (SUB/SID). Appoints the relay BOX No. by using SUB.
Relay transmission	No
Transmission error prevention	• Check destination: When transmitting, compares the FAX No. specified with the FAX No. information (CSI) of the remote station and transmits only when both numbers are the same. • Destination check display function: When transmitting, displays the list of addresses to allow to check the address again and then transmit. • Restrict FAX broadcasting: Prohibits to specify multiple addresses for FAX transmission.
Confirm Address (at calling and registration)	• During direct dialing, call is initiated only if the destination number inputted a first time matches with that inputted a second time.

1.2.3 Polling

Polled transmission	There is one documents which allows the transmission setting. • Documents are deleted after transmission. • No additional scanning of documents • No ADF polled transmission reservation
Polling reception	The sequential polling is possible. 600 stations maximum (abbreviated dial x 500 stations and key pad dialing x 100 stations)
Call turnaround polling	No
Called turnaround polling	Yes
Closed polling transmission	No
Selective polling	Transmission and reception. The selective polling by using the F-code (SEP). There is a bulletin board BOX polling reception. No confidential BOX polling transmission

1.2.4 Line seizure mode and telephone function

Line seizure mode switching	Possible to set the automatic reception and the manual reception. • When the memory is full and there are no polling transmission reservations, the automatic reception mode is cancelled. • No switching of the auto / manual mode by appointing data and time
Ans. Machine mode	Yes • At the time of the CNG detection with the external phone off hook, a line is caught to start reception.
Automatic reception mode	Time and the number of rings. • No. of rings: 0 to 15 times (country spec) • Time: 0 to 15 secs (country spec)
Hold	No
Handset	No
One-piece phone	Country spec

Call to external telephone	No
Conversation reservation	No

1.2.5 Message reception and record

Confidential reception	Reception at the confidential BOX appointed at the F-code (SUB). When a transmission password (SID) has been set for the confidential box, the SID should be specified as the communication password. At the time of printing documents received at the confidential BOX, a password to access to the confidential BOX is required.
Closed reception	Closed reception by using the SID (PWD) (Junk FAX)
Adaptive (automatic) reduction	87 to 96 % in steps of 1 % Becomes the adaptive reduction when “Print Separate Fax Pages = OFF” is selected. In case of the adaptive reduction, if the reception image size is a little bigger than recording paper, the size is automatically reduced so that it becomes within the recording paper size and is recorded.
Fixed reduction	No
Page separation record	Does not overlap at the division.
Equal size recording	Records the received image at an equal size. When the reception size is larger than A3 form, excessive image is destructed.
Cassette selection	Appropriate paper size auto selection • When paper is running out, paper is provided from another cassette with the same size of paper. • Tray-fix mode available
2-in-1 reception	No

1.2.6 Memory function

Display of used memory space	Yes (Fax screen: RDH memory)
Memory RX	A password is required for printing received files. The password (up to 8 digits) is set when the memory RX mode is set in the utility mode. First page can be printed.
Memory substitute reception	Yes (when there is no paper / no toner)

1.2.7 Various communication function

Short protocol	No
ECM	Yes • Frame size: 64 byte / 256 byte
Communication timer	Yes • 24 hours maximum. 21 including one for sequential polling timer.
Redial waiting	Five redial timers maximum
Error page resending	No (becomes the error page redial.)

Error page redial	Effective to both quick memory transmission and memory transmission. Redial and retransmission in case of RTN or comm error. • Redial interval: follows the busy redial interval. • Num. of redials: 0 to 7 times (different counter from the busy redial)
Total page number print	Yes • Automatic print to the TTI in memory transmission. • Added when the number of document pages is appointed for quick memory transmission.
Header memo	No
TTI (Transmitting terminal ID)	Yes • 30 characters maximum • Added not to the original read image, but to the top of the transmission image while in the image rotation being specified. • The registration of up to 20 sender names is available. • It is possible to make a selection to decide whether or not the address is printed at the header position.
RTI (Receiving terminal ID)	Yes • After processing the enlargement and/or reduction operations, a record is made at the bottom position specified before conducting an image rotation. • Date, time and page no. are recorded.
Fax remote diagnosis	Yes
MH fix	Yes. Setting can be made from the service mode.
Document insertion after dialing	Yes Document insertion is possible after dialing. Starts calling by using the [Start] button.
Communication history	Yes • The last 700 communication histories are recorded in the communication journal.
Electronic key counter	Yes • The number of transmitted pages to each user. Limit control is not done.
Key counter	Yes
Coin vendor	Yes. (Support timing varies depending on models.) • It is possible to use with FAX.

1.2.8 User lists / reports

Activity report	• The total of 700 communications (sending and reception) can be recorded. • Automatic output: Daily / Every 100 Comm. / 100/ Daily • Manual output: Yes
Timer reservation TX report	Automatic output Users can turn ON/OFF.
TX result report	Automatic output (ON / If TX Fails / OFF) Possible to output with images
Sync transmit reservation report	Automatic output: Users can turn ON / OFF.
Broadcast result report	Automatic output: Users can select All Destination, 1 Destination at a time.

Polled Tx reserve report	Automatic output: Users can turn ON / OFF.
Polled Tx result report	
Polled Rx result report	
Sequential poll, Rx reservation report	
Sequential poll, Rx result report	
An address polling Rx reserved report	
Relay TX result report	
Relay request report	
PC-Fax TX error report	
Address book list	Manual output (numeric order: output to be produced for each destination type)
Program list	Manual output
Group address list	
Fax setting list	
Bulletin TX report	Automatic output: Users can turn ON / OFF.
Confidential RX report	Auto output at the F code confidential reception. Automatic output: Users can turn ON / OFF.
Subject/Text list	Manual output

1.2.9 Other user functions

Fax ID	Number ID: 20 digits (max.)
Header note	No
Language selection	Yes

1.3 Network fax specifications

1.3.1 Internet fax

- Main product specifications relating to internet fax functions are indicated below.
- Specifications are subject to change without notice.

Image memory capacity	128 GB* (128 GB of 250 GB of the hard disk is used as a memory.)	
Max. no. of stored pages	Approx. 10000 pages* (numbers of pages in the case of storing standard A4-size pages containing approximately 700 characters at “fine” resolution)	
Scanning line density	Ultra fine	600 dpi x 600 dpi
	Super fine	400 dpi x 400 dpi
	Fine	200 dpi x 200 dpi
	Normal	200 dpi x 100 dpi
Transmission mode (File type)	monochrome (TIFF-FX)	
Transmission coding methods	TIFF-S (MH), TIFF-F (MR/MMR)	
Max. scanning size	420 mm x 297 mm (A3 size) Width: 297 mm Length: 1000 mm at the maximum (432 mm at the maximum for 600 dpi resolution)	
Max. recording size	420 mm x 297 mm (A3 size) The data of an original that is longer than 1000 mm cannot be received. (For 600 dpi resolution, data of an original that is longer than 460 mm cannot be received.) When receiving the data of an original that is longer than the paper sizes set in the paper trays, the data is printed according to the setting of [Print Separate Fax Pages].	
Treatment of transmission error	Mail transmitted again.	None
	Internet fax Rx error report	When documents cannot be sent to the SMTP server, transmission error report to be printed/not printed can be set.
		When MDN/DSN response is received, to be printed/not to be printed can be set.
		When MDN/DSN response is received, transmission result is indicated on the transmission control report.
		MDN/DSN response monitoring time can be set in the range from 0 to 99 hours.
Mail reception	Mail acquisition interval	Can be set to 1 to 60 minutes.
	Manual POP reception	Possible
	Reception by specifying a box	Not Available (except Memory RX)
	Received document size	width: A4 / B4 / A3
	Reception coding system	TIFF-S (MH), TIFF-F (MR/MMR)

List/report	Print DSN message	Output can be produced
	Print MDN message	Output can be produced
	Print receipt mail text	Output can be produced
	Network fax relay result report	Output can be produced
	Network fax activity report	During automatic output: Shared with Fax Activity Report. Max. 100. During manual output: Shared with Fax Activity Report. Max. 700.
	Network fax Rx error report	Output can be produced

1.3.2 IP address fax

- Main product specifications relating to IP Address Fax functions are indicated below.
- Specifications are subject to change without notice.

Image memory capacity	128 GB* (128 GB of 250 GB of the hard disk is used as a memory.)	
Max. no. of stored pages	Approx. 10000 pages* (numbers of pages in the case of storing standard A4-size pages containing approximately 700 characters at “fine” resolution)	
Scanning line density	Ultra fine	600 dpi x 600 dpi
	Super fine	400 dpi x 400 dpi
	Fine	200 dpi x 200 dpi 300 dpi x 300 dpi (Color: Compact PDF only)
	Normal (Monochrome only)	200 dpi x 100 dpi
Transmission mode (File type)	Color (PDF, Compact PDF, TIFF-C) / Monochrome (TIFF) Capable of transmitting TIFF-C (JPEG); Incapable of receiving TIFF-C (JPEG) (any receiving TIFF-C jobs are discarded)	
Coding methods	MH/MR/MMR (applicable only to monochrome format)	
Max. scanning size	A3 (420 mm x 297 mm) Width: 297 mm Length: Max. 1000 mm.	
Max. recording size	A3 (420 mm x 297 mm) 1000 mm in the maximum recording size Originals in excess of 1000 mm cannot be received. In the color mode, the reception of an original in excess of 432 mm in length is unavailable. When receiving originals longer than the paper size in the paper trays, printing is made according to the setting of [Print Separate Fax Pages].	
Treatment of transmission error	Retry	Error codes subject to retry: N10, N12, N15 to 17 only
	TX error report	TX error report printing ON/OFF can be set. A TX error report is printed when a TX error occurs and the TX error is recorded in the activity.

Reception	Received document size	Max. document width to be received: A3
	Reception coding system	• TIFF-S (MH) • TIFF-F (MR/MMR) • PDF • Compact PDF • TIFF-C
	Received file size	Unlimited (depends on the space available for use in the HDD) The file is not received, if the space available for use in the HDD is 107 MB or less. If the space available for use in the HDD runs out during reception, the session is abnormally terminated and the received file is deleted.
Report	Print receipt mail text	Possible

*: The Internal hard disk is common used of each function of the Copy, the Scan, the Print and the Box.

1.4 Inhibited combinations

- The following show combinations of application functions.

Exclusive function (next input) Automatic setting function

				Original Type Image				Density	Simplex/Duplex			Resolution				Special Original			Bind Position	Number of Original	Scan Size												Frame Erase	Background Adjustment	TX Stamp *2	Sharpness *2 *7	File Type	
				Text	Text/Photo	Photo	Dot. Matrix		Single Sided	Double Sided	Cover + 2 Sided	Standard	Fine	Super Fine	Ultra Fine	Long Original *2	Z-Folded Original *2	Mixed Original			A3 Length	B4 Length	A4 Length	A4 Width	B5 Length	B5 Width	A5 Width	B6 Length	8.5*11 Length	8.5*11 Width	8.5*14 Length	11*17 Length					TIFF	PDF
Setting Item (previous input)	Scan Setting	Original Image Type	Text	■	o	o	o																															
			Text/Photo	o	■	o	o																															
			Photo	o	o	■	o																															
			Dot. Matrix	o	o	o	■																															
		Density *7						■																														
		Simplex/Duplex	Single Sided						■	o	o																											
			Double Sided						o	■	o					×																						
			Cover + 2 Sided						o	o	■					×				×																		
		Resolution	Standard									■	o	o	o																							
			Fine									o	■	o	o																							
			Super Fine									o	o	■	o																							
			Ultra Fine									o	o	o	■																							
		Special Original	Long Original *2							×	×					■	o	o	×														×					
			Z-Folded Original *2													o	■	o																				
			Mixed Original													o	o	■	×	×																		
		Bind Position														×		×	■																			
		Number of Original									×							×		■	×	×	×	×	×	×	×	×	×	×	×	×	×						
		Scan Size	A3 Length																	×	■	o	o	o	o	o	o	o	o	o	o	o						
			B4 Length																	×	o	■	o	o	o	o	o	o	o	o	o	o						
			A4 Length																	×	o	o	■	o	o	o	o	o	o	o	o	o						
			A4 Width																	×	o	o	o	■	o	o	o	o	o	o	o	o						
			B5 Length																	×	o	o	o	o	■	o	o	o	o	o	o	o						
			B5 Width																	×	o	o	o	o	o	■	o	o	o	o	o	o						
			A5 Width																	×	o	o	o	o	o	o	■	o	o	o	o	o						
			B6 Length																	×	o	o	o	o	o	o	o	■	o	o	o	o						
			8.5*11 Length																	×	o	o	o	o	o	o	o	o	■	o	o	o						
			8.5*11 Width																	×	o	o	o	o	o	o	o	o	o	■	o	o						
			8.5*14 Length																	×	o	o	o	o	o	o	o	o	o	o	■	o						
			11*17 Length																	×	o	o	o	o	o	o	o	o	o	o	o	■						
		Frame Erase														×				×														■					
		Background Adjustment																																	■			
		TX Stamp *2																																		■	■	
		Sharpness *2 *7																																			■	
		File Type *5	TIFF																																			o
			PDF																																			o
	Comm. Setting *6	Quick Memory TX *2									×							×			×	×	×	×	×	×	×	×	×	×	×	×	×						
		Memory TX (=Quick Memory TX OFF)																		×																		
		F-Code TX																																				
		Polling TX																		×																		
		Polling RX									×					×	×	×	×	×	×	×	×	×	×	×	×	×	×	×	×	×	×						
		Timer TX																		×																		
		Password TX																																				
		Oversea TX																																				
		ECM OFF																																				
		V34 OFF																																				
		Line Selection																																				
		URL Information																																				
		Separate Scan														×	×		×	×																		
		Multiple Destination Select																		×																		
		Scan To E-Mail																																				
		Scan To Box																																				
		Scan Mode	Platen							*1	*1									*4															*4			
			DF																																			

				Exclusive function (next input) Automatic setting function																	
				Quick Memory TX *2	Memory TX (=Quick Memory TX OFF)	F-Code TX	Polling TX	Polling RX	Timer TX	Password TX	Oversea TX	ECM OFF	V34 OFF	Line Selection	URL Information	Separate Scan	Multiple Destination Select	Scan To E-Mail	Scan To Box	Scan Mode Platen	Scan Mode DF
Setting Item (previous input)	Scan Setting	Original Image Type	Text																		
			Text/Photo																		
			Photo																		
			Dot. Matrix																		
		Density *7																			
		Simplex/ Duplex	Single Sided																		
			Double Sided																	*1	
			Cover + 2 Sided	×				×												*1	
		Resolution	Standard																		
			Fine																		
			Super Fine																		
			Ultra Fine																		
		Special Original	Long Original *2					×								×					
			Z-Folded Original *2					×								×					
			Mixed Original	×				×													
		Bind Position						×								×					
		Number of Original		×	o		×	×	×							×	o			o	
		Scan Size	A3 Length	×				×													
			B4 Length	×				×													
			A4 Length	×				×													
			A4 Width	×				×													
			B5 Length	×				×													
			B5 Width	×				×													
			A5 Width	×				×													
			B6 Length	×				×													
			8.5*11 Length	×				×													
			8.5*11 Width	×				×													
			8.5*14 Length	×				×													
			11*17 Length	×				×													
		Frame Erase		×				×													
		Background Adjustment																			
		TX Stamp *2																		o	
		Sharpness *2 *7																			
		File Type *5	TIFF																		
			PDF																		
	Comm. Setting *6	Quick Memory TX *2			o		×	×	×							×	o	×	×		
		Memory TX (=Quick Memory TX OFF)		o																	
		F-Code TX					×	×		×								*3	*3		
		Polling TX		×		×		×	×	×	×	×	×	×			×	×	×		
		Polling RX		×		×	×			×	×	×	×			×		×	×		
		Timer TX		×			×											×	×		
		Password TX				×	×	×													
		Oversea TX					×	×													
		ECM OFF					×	×					×								
		V34 OFF					×	×				×									
		Line Selection					×														
		URL Information																			
		Separate Scan		×				×													
		Multiple Destination Select		×			×														
		Scan To E-Mail		×		*3	×	×	×												
		Scan To Box		×		*3	×	×	×												
		Scan Mode	Platen																		o
			DF																	o	

o: Exclusive (Ante-priority) 0: Post-priority (Ante-input items are released.) No entry: No restriction

(*1): When it is recognized that an original is being read by the platen to start a job while in the double sided or cover + 2 sided setting, this results in a setting in which the double sided or cover + 2 sided is released.

(*2): The long original, Z-folded original, TX stamp, sharpness and quick memory TX functions are available or not depending on models.
(*3): An F code transmission is ignored when it is sent to any receiving ends other than FAX.
(*4): Automatically reset when the original is read with the platen glass.
(*5): The Internet fax is TIFF fixed. The IP address fax is TIFF fixed in the monochromatic transmission mode and PDF fixed in the color transmission mode.
(*6): For the network fax (Internet fax/IP address fax), the use of the comm. setting is unavailable.
(*7): In the color transmission mode of the IP address fax, it is not possible to specify density and sharpness.

1.5 Caution when using prefix/suffix auto setting (North American users only)

When turning ON the [Prefix/Suffix Auto Setting], following settings are required in the service mode.

- Select [System 2]-[Option Board Status] and set the fax to [Unset].
- Select [System 1]-[Marketing Area] and set the [Marketing Area] and [Fax Target] to the place of installation of the unit.

2. COMMUNICATION CONTROL

2.1 Protocol

2.1.1 FIF bits of DIS, DTC and DCS

A. FIF data configuration list (DIS/DTC)

octet	bit	Function	Contents	Default
4	1	T.37 Internet fax (Simple mode)		0
	2	Reserved		0
	3	T.38 real time Internet fax		0
	4	Third generation mobile network		0
	5	Reserved		0
	6	V.8 ability		0
	7	ECM frame	0: 256 octet 1: 64 octet	0
	8	Reserved		0
5	9	Ready for polled transmission	1: polled transmission documents exist 0: no polled transmission documents	@
	10	Receiver ability	1: Reception is possible. 0: Reception is impossible.	@
	11	Transmission speed ability	Refer to *1.	1
	12			1
	13			0
	14			1
	15	R8*7.71/mm and / or 200*200 pels/25.4 mm		1
	16	Two-dimensional coding ability	1: MR 0: MH	1
6	17	Recording paper width ability	bit 0,0=A4 0,1=A3	0
	18		(17,18) 1,0=B4 1,1=Invalid	1
	19	Recording paper length ability	bit 0,0=A4 0,1=Unlimited	0
	20		(19,20) 1,0=B4 1,1=Invalid	1
	21	Minimum scan line time ability	Refer to *2.	1
	22			0
	23			0
	24	Expansion field		1
7	25	Reserved		0
	26	Non-compression mode		0
	27	Error correction mode (ECM) ability	1: with ECM 0: without ECM	1
	28		0: fixed	0
	29	Reserved		0
	30	Reserved		0
	31	T.6 coding (MMR) ability	1: with MMR 0: without MMR	1
	32	Expansion field		1

octet	bit	Function	Contents	Default
8	33	Field not valid		0
	34	Multi-selective polling	1: Ability 0: No ability	0
	35	Polled sub-address		0
	36	T.43 coding ability		0
	37	Plain Interleave		0
	38	32K ADPCM voice coding		0
	39	Reserved		0
	40	Expansion field		1
9	41	R8*15.41/mm		1
	42	300*300 pels/25.4 mm		0
	43	R16*15.41/mm and / or 400*400 pels/25.4 mm		1
	44	inch ability		1
	45	mm ability		1
	46	Minimum scan line time ability of high resolution	0: T15.4=T7.7 1: T15.4=1/2T7.7	0
	47	Selective polling		1
	48	Expansion field		1
10	49	Sub address ability		1
	50	Password		1
	51	Ready for data file transmission (polling)		0
	52	Reserved		0
	53	BFT transfer ability		0
	54	DTM transfer ability		0
	55	EDI transfer ability		0
	56	Expansion field		0
11	57	BTM transfer ability		0
	58	Reserved		0
	59	Character or mixed mode documents ready for Tx (polling)		0
	60	Character mode ability		0
	61	Reserved		0
	62	Mixed mode ability		0
	63	Reserved		0
	64	Expansion field		0

octet	bit	Function	Contents	Default
12	65	Processible mode (T.505)		0
	66	Digital network ability		0
	67	Full-duplex communication ability	0: Half-duplex 1: Full-duplex	0
	68	JPEG coding ability		0
	69	Full color mode		0
	70		0: Fixed	0
	71	12 bits / pixel component		0
	72	Expansion field		1
13	73	No sub sampling (1:1:1)		0
	74	Custom illuminance		0
	75	Custom gamut range		0
	76	North America Letter (215.9*279.4) ability		0
	77	North America Legal (215.9*355.6) ability		0
	78	Single progression sequential coding (T.85) basic ability		1
	79	Single progression sequential coding (T.85) optional LO ability		@
	80	Expansion field		0
14	81	HKM key management capability		0
	82	RSA key management capability		0
	83	Override capability		0
	84	HFX40 cipher capability		0
	85	Alternative cipher number 2 capability		0
	86	Alternative cipher number 3 capability		0
	87	HFX40-I hashing capability		0
	88	Expansion field		1
15	89	Alternative hashing system number 2 capability		0
	90	Alternative hashing system number 3 capability		0
	91	Reserved		0
	92	T.44 (Mixed raster content)		0
	93	T.44 (Mixed raster content)		0
	94	T.44 (Mixed raster content)		0
	95	Page length maximum strip size for T.44 (Mixed raster content)		0
	96	Expansion field		1

octet	bit	Function	Contents	Default
16	97	Color/gray-scale 300 pels/25.4 mm x 300 lines/ 25.4 mm or 400 pels/25.4 mm x 400 lines/25.4 mm resolution		0
	98	100 pels/25.4 mm x 100 lines/ 25.4 mm for color/gray scale		0
	99	Simple phase C BFT negotia-tions capability		0
	100	Extended BFT negotiations capability		0
	101	Internet selective polling address (ISP)		0
	102	Internet routing address (IRA)		0
	103	Reserved		0
	104	Expansion field		1
17	105	600 pels/25.4 mm x 600 lines/ 25.4 mm		1
	106	1200 pels/25.4 mm x 1200 lines/ 25.4 mm		0
	107	300 pels/25.4 mm x 600 lines/ 25.4 mm		0
	108	400 pels/25.4 mm x 800 lines/ 25.4 mm		0
	109	600 pels/25.4 mm x 1200 lines/ 25.4 mm		0
	110	Color/gray-scale 600 pels/25.4 mm x 600/25.4 mm resolution		0
	111	Color/gray-scale 1200 pels/25.4 mm x 1200/25.4 mm resolution		0
	112	Expansion field		0
18	113	Double sided printing capability (alternate mode)		0
	114	Double sided printing capability (continuous mode)		0
	115	Black and white mixed raster content profile (MRCbw)		0
	116	T.45 (run length color encoding)		0
	117	Shared date memory capacity	bit (117,118) 0,0=Disable 0,1= Level 1=1.0 Mbytes 1,0= Level 2=2.0 Mbytes 1,1= Level 3=unlimited (i.e. 32 Mbytes or more)	0
	118			
	119	Reserved		0
	120	Expansion field		0

octet	bit	Function	Contents	Default
19	121	Flow control capability for T.38 communication		0
	122	K > 4		0
	123	Internet aware T.38 mode fax device		0
	124	T.89 (Application profiles for ITU-T T.88)	*3 Reference	0
	125			
	126			
	127	sYCC-JPEG coding		0

@) Changes to 0 or 1 according to a status of devices.

(1) Transmission speed ability (bit 11, 12, 13 and 14)

11	12	13	14	Contents	Transmission speed
0	0	0	0	V27 ter fall back mode	24
0	1	0	0	V27 ter	48, 24
1	0	0	0	V29	96, 72
1	1	0	0	V27 ter & V29	96, 72, 48, 24
1	1	0	1	V27 ter & V29 & V17	144, 120, 96, 72, 48, 24

(2) Minimum scan line time ability (bit 21, 22 and 23)

21	22	23	Contents	
0	0	0	3.851/mm --- 20 ms	7.71/mm --- 20 ms
0	0	1	3.851/mm --- 40 ms	7.71/mm --- 40 ms
0	1	0	3.851/mm --- 10 ms	7.71/mm --- 10 ms
0	1	1	3.851/mm --- 10 ms	7.71/mm --- 5 ms
1	0	0	3.851/mm --- 5 ms	7.71/mm --- 5 ms
1	0	1	3.851/mm --- 40 ms	7.71/mm --- 20 ms
1	1	0	3.851/mm --- 20 ms	7.71/mm --- 10 ms
1	1	1	3.851/mm --- 0 ms	7.71/mm --- 0 ms

(3) T.89 (Application profile for ITU-T T.88)

124	125	126	Contents
0	0	0	not used
0	0	1	Profile 1
0	1	0	Profile 2
0	1	1	Profile 3
1	0	0	Profile 2 and 3
1	0	1	Reserved
1	1	0	Reserved
1	1	1	Reserved

B. FIF data configuration list (DCS)

octet	bit	Function	Contents	Default
4	1	T.37 Internet fax (Simple mode)		0
	2	Reserved		0
	3	T.38 Real time Internet fax		0
	4	Third generation mobile network		0
	5	Reserved		0
	6	Invalid		0
	7	Invalid		0
	8	Reserved		0
5	9		0: fixed	0
	10	Reception command		1
	11	Transmission speed instruction	Refer to *4.	@
	12			@
	13			@
	14			@
	15	R8*7.71/mm or 200*200 pels/ 25.4 mm	1: 7.71/mm 0: 3.851/mm	@
	16	Two-dimensional coding instruction	1: MR 0: MH	@
6	17	Recording paper width instruction	bit 0,0=A4 0,1=A3	@
	18		(17,18) 1,0=B4 1,1=Invalid	@
	19	Recording paper length instruction	bit 0,0=A4 Unlimited	@
	20		(19,20) 1,0=B4 1,1=Invalid	@
	21	Minimum scan line time instruction	Refer to *5.	@
	22			@
	23			@
	24	Expansion field		@
7	25	Reserved		0
	26	Non-compression mode		0
	27	Error correction mode (ECM) instruction	1: with ECM 0: without ECM	@
	28	Frame size instruction	0: 256 octet 1: 64 octet	@
	29	Reserved		0
	30	Reserved		0
	31	T.6 coding (MMR) instruction	1: with MMR 0: without MMR	@
	32	Expansion field		@

octet	bit	Function	Contents	Default
8	33	Field Not valid		0
	34		0: fixed	0
	35		0: fixed	0
	36	T.43 Coding		0
	37	Plain Interleave		0
	38	32K ADPCM Voice coding		0
	39	Reserved		0
	40	Expansion field		@
9	41	R8*15.41/mm		@
	42	300*300 pels/25.4 mm		@
	43	R16*15.41/mm or 400*400 pels/ 25.4 mm		@
	44	inch/mm instruction	0: inch setting 1: mm setting	@
	45	Arbitrary		0
	46	Arbitrary		0
	47		0: fixed	0
	48	Expansion field		@
10	49	Sub address transmission		@
	50	Password (SID) transmission		@
	51		0: fixed	0
	52	Reserved		0
	53	BFT transfer		@
	54	DTM transfer		0
	55	EDI transfer		0
	56	Expansion field		@
11	57	BTM transfer		0
	58	Reserved		0
	59		0: fixed	0
	60	Character mode		0
	61	Reserved		0
	62	Mixed mode		0
	63	Reserved		0
	64	Expansion field		@
12	65	Processible mode (T.505)		0
	66	Digital network ability		0
	67	Full-duplex communication instruction	0: Half-duplex 1: Full-duplex	0
	68	JPEG coding		0
	69	Full color mode		0
	70	Default Huffman table use		0
	71	12 bits / pixel component		0
	72	Expansion field		@

octet	bit	Function	Contents	Default
13	73	No sub sampling (1:1:1)		0
	74	Custom illuminance		0
	75	Custom gamut range		0
	76	North America Letter (215.9*279.4)		0
	77	North America Legal (215.9*355.6)		0
	78	Single progression sequential coding (T.85) basic		@
	79	Single progression sequential coding (T.85) optional LO		@
	80	Expansion field		@
14	81	HKM key management selected		0
	82	RSA key management selected		0
	83	Override mode selected		0
	84	HFX40 cipher selected		0
	85	Alternative cipher number 2 selected		0
	86	Alternative cipher number 3 selected		0
	87	HFX40-I hashing selected		0
	88	Expansion field		@
15	89	Alternative hashing system number 2 selected		0
	90	Alternative hashing system number 3 selected		0
	91	Reserved		0
	92	T.44 (Mixed raster content)		0
	93	T.44 (Mixed raster content)		0
	94	T.44 (Mixed raster content)		0
	95	Page length maximum strip size for T.44 (Mixed raster content)		
	96	Expansion field		@

octet	bit	Function	Contents	Default
16	97	Color/gray-scale 300 pels/25.4 mm x 300 lines/ 25.4 mm or 400 pels/25.4 mm x 400 lines/25.4 mm resolution		0
	98	100 pels/25.4mm x 100 lines/ 25.4 mm for color/gray scale		0
	99	Simple phase C BFT negotia-tions capability		0
	100		0: Fixed	0
	101		0: Fixed	0
	102	Internet routing address (IRA) Transmission		0
	103	Reserved		0
	104	Expansion field		@
17	105	600 pels/25.4 mm x 600 lines/ 25.4 mm		@
	106	1200 ples/25.4 mm x 1200 lines/ 25.4 mm		0
	107	300 pels/25.4 mm x 600 lines/ 25.4 mm		0
	108	400 pels/25.4 mm x 800 lines/ 25.4 mm		0
	109	600 pels/25.4 mm x 1200 lines/ 25.4 mm		0
	110	Color/gray-scale 600 pels/25.4 mm x 600/25.4 mm resolution		0
	111	Color/gray-scale 1200 pels/25.4 mm x 1200/25.4 mm resolution		0
	112	Expansion field		0
18	113	Double sided printing selected (alternate mode)		0
	114	Double sided printing selected (continuous mode)		0
	115		0: Fixed	0
	116	T.45 (run length color encoding)		0
	117	Shared date memory required	bit (117,118) 0,0=not used 0,1= Level 1=1.0 Mbytes 1,0= Level 2=2.0 Mbytes 1,1= Level 3=unlimited (i.e. 32 Mbytes or more)	0
	118			
	119	Reserved		0
	120	Expansion field		0

octet	bit	Function	Contents	Default
19	121	Flow control capability for T.38 communication		0
	122	K > 4		0
	123	Internet aware fax device operating in T.38 mode		0
	124	T.89 (Application profiles for ITU-T T.88)	*6 Reference	0
	125			
	126			
	127	sYCC-JPEG coding		0

@) Changes to 0 or 1 according to a status of devices.

(1) Transmission speed appointment (bit 11, 12, 13 and 14)

11	12	13	14	Contents
0	0	0	0	24/V27 ter
0	1	0	0	48/V27 ter
1	0	0	0	96/V29
1	1	0	0	72/V29
0	0	0	1	144/V17
0	1	0	1	120/V17
1	0	0	1	96/V17
1	1	0	1	72/V17

(2) Minimum scan line time instruction (bit 21, 22 and 23)

21	22	23	Contents
0	0	0	20 ms
0	0	1	40 ms
0	1	0	10 ms
1	0	0	5 ms
1	1	1	0 ms

(3) T.89 (Application profile for ITU-T T.88)

124	125	126	Contents
0	0	0	not used
0	0	1	Profile 1
0	1	0	Profile 2
0	1	1	Profile 3
1	0	0	Invalid
1	0	1	Reserved
1	1	0	Reserved
1	1	1	Reserved

NOTE

- **Considered to be A4 width when the DIS recording paper width is invalid (1, 1).**
  Becomes a FIF error when the DCS recording paper width is invalid (1, 1).
- **Considered to be unlimited when the DIS recording paper length is invalid (1, 1).**
  Considered to be unlimited when the DCS recording paper length is invalid (1, 1).
  The DCS recording paper length in a machine is made to be of the same length as that in a remote station and is sent.
- **Considered to be 2400bps when the DIS transmission speed is an undefined value.**
  Becomes a FIF error when the DCS transmission speed is an undefined value.
- **Considered to be 40ms instruction when the MSLT of DCS is an undefined value.**
- **Considered to have mm ability when DIS inch ability and mm ability are both set to OFF.**
  Considered to be 200*100 pels/inch when the DCS resolution receives the inch instruction at 3.851/mm.
  Becomes a FIF error when more than one of bit41, 42 and 43 are set to on in the resolution of DCS.
- **Becomes a FIF error when DCS receives the MMR instruction without ECM.**
- **Becomes a FIF error when DCS receives the file transfer (BFT) instruction without ECM.**
- **Becomes a FIF error when DCS shows an instruction which exceeds the ability of the machine.**
- **FIF of DIS/DTC is not sent if last octet is 0.**
  DCS sends FIF whose length is the same as that of the machine.
- **When undefined signals are received, they are received and ignored in consideration of the future expansion. (not a error)**

2.1.2 Modem fallback sequence

- Fallback sequences of TCF and CTC are shown as follows:

A. V17, V29, and V27 ter

Ability of a remote station	TCF fallback sequence
V27 ter/V29	96/V.29 → 72/V.29 → 48/V.27 ter → 24/V27 ter
V27 ter/V29/V33 V17	144/V.17 → 120/V.17 → 96/V.17 → 72/V.17 → 48/V.27 ter → 24/V27 ter

- On the transmission side : If PPR is received four times, a modem is set in the fallback state.
- On the reception side : In case of sending PPR, when the number of error frames exceeds the FP value, a modem is set in the fallback state.

B. V34

- Line quality is always water by modem.
  Optimum speed is automatically selected on-the-fly.

2.1.3 V8/V34 sequence

A. V34

(1) Outline

- The 33.6kbps data transmission method and protocol including the V8 protocol. As for each of full-duplex and half-duplex, startup handshake until data transmission starts is divided into four phases, phase1 to 4, and signals used in each phase are regulated.

(2) Features

- Full-duplex (echo canceler method) / Half-duplex method are regulated (for data / FAX respectively)
- 2400, 3000 and 3200 symbols / sec (mandatory) and 2743, 2800 and 3429 symbols / sec (option) QAM synchronous transmission at each symbol rate
- Communication at each signal rate of 33600, 31200, 28800, 26400, 24000, 21600, 19200, 16800, 14400, 12000, 9600, 7200, 4800 and 2400 bps
- Four-dimensional-symbol trellis coding
- A 200bps sub channel which can be used as an asynchronous second channel (option)
- Negotiation in which characteristics of a line is measured before transmission starts and the maximum communication speed is achieved by finely adjusting the transmission parameter, based on the result of measurement (carrier / frequency / equalizer / symbol rate / level, etc.)
- Data transmission in the super frame with the hierarchical structure

B. sample of a signal procedure at sending two pages

(1) Beginning of communications to beginning of 1st page transmission

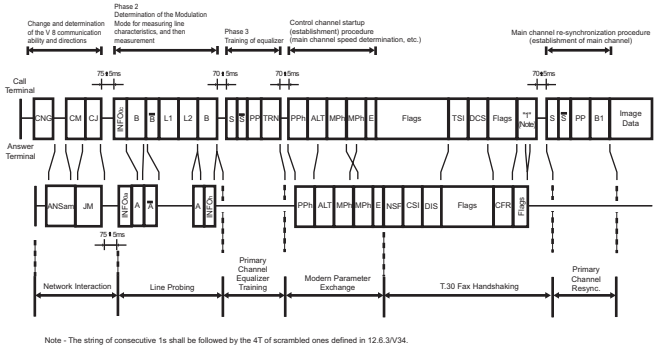

(2) Signals between pages

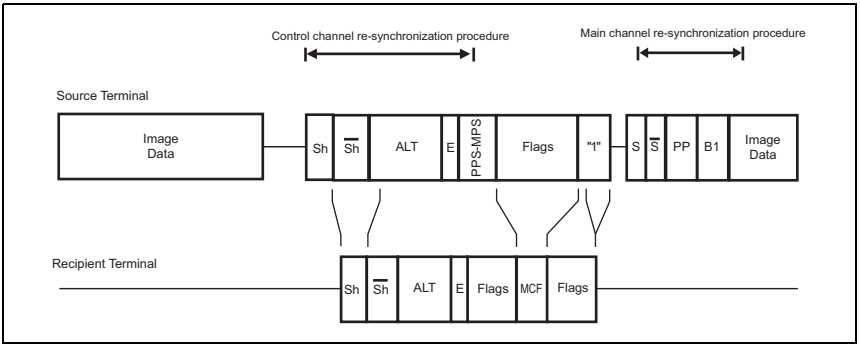

(3) 2nd page transmission termination to communication termination

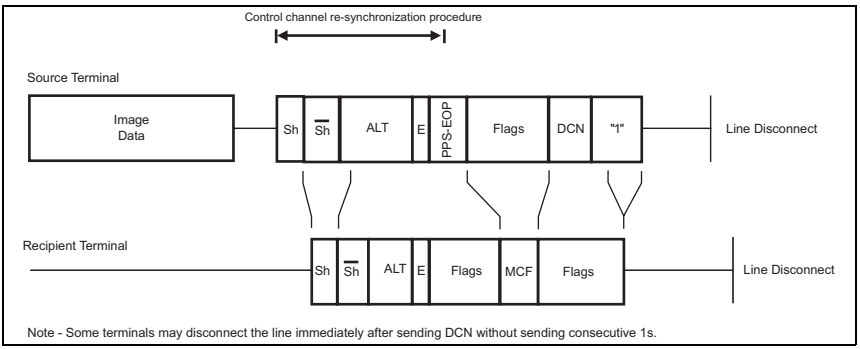

C. Procedure details

(1) Phase 1 (V8) ....Beginning of connection between a calling modem and a called modem

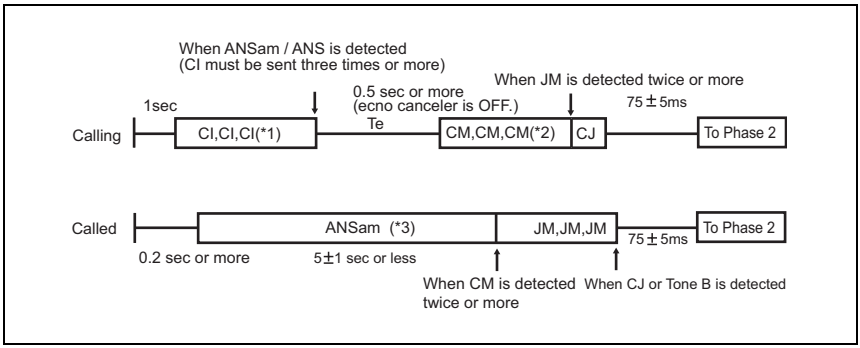

(*1) One of no signals / C1 / CNG (T.30) / CT (V.25)
(*2) V.34 full-duplex ability in the modulation mode bit is ON.
(*3) ANSam of phase inversion is sent. Phase inversion is an option in case of supporting only half-duplex. When CM or valid signal from the calling side is not detected, the procedure is moved to T.30, etc. after 75 ± 5 ms interval.

<Signal Definition>

Signal type	Meaning	Signal direction call called	Signal speed	Timing of transmission
CI (Call indicator)	Function display on the calling side	→	V21(L) (300 bps)	Start: after 0.4 seconds after line connection from ON condition (in the following format) Stop: when 3 period or more has passed after ANSam / ANS is detected 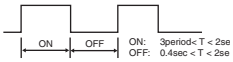
	[Comments] • CI is a signal to carry call function. • The calling side send CI, CT (Call Tone - V25) or CNG. • CI transmission and detection are optional. • The ON minimum time (=3 Period) is of duration of three CI signals in the following format.			
ANSam (Modified Answer Tone)	V.8 procedure on the called side	←	—	When 0.2 seconds or more has passed after reception
	[Comments] • Essential for a called machine which supports the V8 procedure. • 2100 Hz sinewave is phase-inverted by 400 +/-25 ms periods, then amplitude modulated by 15 +/-0.1 Hz sinewave • Average value of modulation factor (x) 0.8 +/- .01 < x < 1.2 +/- .01 • Average transmission power compliant to V2 • 2100 +/- 200 Hz external power is smaller than the average power by 24 dB or more.			

Signal type	Meaning	Signal direction call called	Signal speed	Timing of transmission
CM (Call Menu)	Modulation mode etc. on the calling side	→ (300 bps)	V.21(L)	Start: Te (0.5 sec. ≤ Te ≤ 1 sec.) has passed after CI transmission stops Stop: When two or more JM are detected
	[Comments] • CM is a signal which carries call function, modulation modes, protocols and GSTN access. • The first information category is call function. • Protocols and GSTN access category are added when the calling side has ability and when needed to inform to a remote station.			
CJ	CM termination	→ (300 bps)	V.21(L)	When CM is completed
	[Comments] • START bit (0) and STOP bit (1) are added to 1 octet of all bit 0. • Signal format START bit b0 b1 b2 b3 b4 b5 b6 b7 STOP bit. 0 0 0 0 0 0 0 0 0 1			
JM (Joint Menu)	Display of common ability on both calling and called sides	← (300 bps)	V.21(H)	Start: When two or more same CM are received Stop: When CJ is received or receives a signal matching the selected Modulation Mode from the calling side
	[Comments] • JM is a response signal to CM and of the same format as the received CM. • The fist information category is Call Function as same as CM. • Modulation mode sets the common bit on calling and called sides and sends by the same octet as received CM. • When there is no common ability, all bits are set to 0 and send by the same octet as received CM. • The minimum item No. is selected from the common bits to determine the actual Modulation Mode. • Protocol is added when it is included in received CM and needed to instruct. • GSTN access is added when it is included in received CM and needed to instruct. • Bit 6 is set to ON when needed to show ability. Bit 5 is set to the same one as received CM			

<Signal format>

1. Preamble: a signal added before each signal when CI, CM and JM signals are sent.

Format: 1111111111+0000000001 (for CI)

+0000001111 (for CM and JM)

2. Common format among each signal CI, CM and JM

- Start Bit (=0) is put at the top and Stop Bit (=1) is put at the end of each octet.

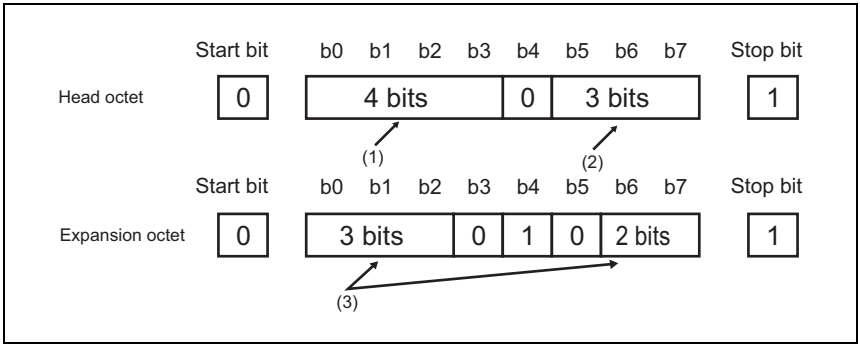

(1):Category tag (tags which represent information types)

Bit assignment					Meaning (information type)	Included signal
b0	b1	b2	b3			
1	0	0	0	...	Call Func	Top of CM, JM / CI
1	0	1	0	...	Modulation Mode	CM / M
0	1	0	1	...	Protocols	CM / M
1	0	1	1	...	GSTN access	CM / M
0	1	1	0	...	PCM modem ability	CM / JM

(2):Option bit (Differs depending on category tags. See the next item, bit definition.)

(3):Additional option bit (Differs depending on category tags. See the next item, bit definition.)

D. Common signal bit definition

(1) Call function (1 octet)

Top octet

b0	b1	b2	b3	b4	b5	b6	b7	Meaning
1	0	0	0	0				(Call Function category tag)
					0	0	0	Defined by ITU-T
					1	0	0	PSTN multi-media terminal
					0	1	0	V18 text phone
					1	1	0	Video tex
					0	0	1	FAX transmission from the calling terminal
					1	0	1	FAX reception in the calling terminal
					0	1	1	Data transmission / reception
					1	1	1	Expansion octet = with call function represented by next octet

(Other than the above = Reserved)

(2) Modulation mode (3 octets)

1st octet

b0	b1	b2	b3	b4	b5	b6	b7	Meaning	Item No.
1	0	1	0	0				(Modulation mode category tag, b4 = 0 is first octet)	
					0/1			PCM modem ability disabled/enabled	
						0/1		V34 full-duplex ability disabled/enabled	1
							0/1	V34 half-duplex ability disabled/enabled	2

2nd octet

b0	b1	b2	b3	b4	b5	b6	b7	Meaning	Item No.
			0	1	0			(b3, 4 and 5=0, 1, 0 means expanded oct.)	
0/1								V32bis / V32 ability disabled / enabled	3
	0/1							V22bis / V22 ability disabled / enabled	4
		0/1						V17 ability disabled / enabled	5
						0/1		V29 half-duplex ability disabled / enabled (used in T.30)	6
							0/1	V27ter ability disabled / enabled	7

3rd octet

b0	b1	b2	b3	b4	b5	b6	b7	Meaning	Item No.
			0	1	0			(b3, 4 and 5=0, 1, 0 means expanded oct.)	
0/1								V26ter ability disabled / enabled	8
	0/1							V26bis ability disabled / enabled	9
		0/1						V23 full-duplex ability disabled / enabled	10
						0/1		V23 half-duplex ability disabled / enabled	11
							0/1	V21 ability disabled / enabled	12

(3) Protocol (1 octet)

Protocols (1 octet)

b0	b1	b2	b3	b4	b5	b6	b7	Meaning
0	1	0	1	0				(Protocols category tag)
					1	0	0	V42 LAPM protocol
					1	1	1	Protocol represented by expanding octet

(4) GSTN access (1 octet)

GSTN access (1 octet)

b0	b1	b2	b3	b4	b5	b6	b7	Meaning
1	0	1	1	0				(GSTN access category tag)
					0/1			Celluler connection in the calling side
						0/1		Celluler connection in the called side
							0/1	0: Analog network connection 1: Digital network connection

(5) PCM modem capability (1 octet)

b0	b1	b2	b3	b4	b5	b6	b7	Meaning
1	1	1	0	0				(PCM modem category tag)
					0/1			V.90 analog modem capability
						0/1		V.90 digital modem capability
							0/1	V.91 capability

E. Phase 2 (Probing) ..... V.34 basic setting

- Exchange of modulation ability
- Measurement of line characteristics (bi-direction)
- Determination and exchange of compensation values to line characteristics (compensation values of maximum data rate, transmission level, pre-emphasis (*))

*: linear equalizer for compensating amplitude distortion

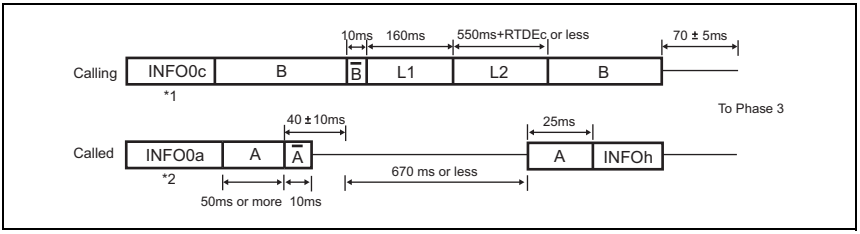

A :2400 Hz tone signal output from the called side (Level is a set value -1dB). 1800 Hz guard tone (Level is a set value -7dB) is output simultaneously from the called side.

Ā :2400 Hz tone signal output from the called side (Phase inversion of A). 1800 Hz guard tone.

B :1200 Hz tone signal output from the called side

B̄ :1200 Hz tone signal output from the calling side (Phase inversion of B)

INFO 0x :Binary signal for indicating auto modulation option signal (x=a/c: a: called side, c: calling side)

L1, L2 :Signal for conditioning line characteristics (tone synthesis at the interval of 150 Hz from 150 to 3750 Hz (except for 900, 1200, 1800 and 2400 Hz))

L1: 160ms Level= Set value+6dB

L2: Maximum 550ms+TRDEx Level = Set value

INFO h :Binary signal for indicating parameters used in Phase 3 (training of main channel equalizer). This signal is sent from a modem receiving main channel data to a transmitting modem.

*1 INFO 0c Bit28 OFF

*2 INFO 0a Bit28 OFF

<INFO 0x Bit Assignment>

Bits (LSB-MSB)	Value	Meaning
0-3	1111	Fill Bits
4-11	01110010	Bit string for frame synchronization
12	0/1	2743 symbol / sec support
13	0/1	2800 symbol / sec support
14	0/1	3429 symbol / sec support
15	0/1	Ability to transmit at low carrier frequency at 3000 symbol / sec
16	0/1	Ability to transmit at high carrier frequency at 3000 symbol / sec
17	0/1	Ability to transmit at low carrier frequency at 3200 symbol / sec
18	0/1	Ability to transmit at high carrier frequency at 3200 symbol / sec
19	0/1	3429 symbol / sec transmission
20	0/1	Ability to lower the transmission level than a preset value
21-23	0 to 5	Maximum tolerance of symbol rates between transmission and reception 0: 2400, 1:2743, 2:2800, 3:3000, 4:3200, 5:3429 symbol / sec
24	0/1	1=INFO 0 is sent from the CME modem
25	0/1	1664 signal point (33.6 K) ability
26-27	0 to 3	Clock source transmission 0: internal, 1: external, 2: synchronous to the reception clock 3: Reserved
28	0/1	1=Correct INFO 0 frame is received during error recovery
29-44		CRC
45-48	1111	Fill Bits

<INFO h Bit Assignment>

Bits (LSB-MSB)	Value	Meaning
0-3	1111	Fill Bits
4-11	01110010	Bit string for frame synchronization (transmitted from the left side)
12-14	0 to 7	Output reduction width demanded by the reception modem (dB) When *the modem on the transmitting side can not reduce output* at INFO 0, the value is set to 0.
15-21	0 to 127	The length of TRN which the modem of the transmitting side send in the Phase 3 (x 35 ms)
22	0/1	High carrier is user for data mode Tx.
23-26	0-10	Pre-emphasis filer index No.which is used for data transmission
27-29	0-5	Symbol rate of data transmission 0: 2400 ... 5: 3429 (symbol / sec)
30	0/1	Selection of parameters used for TRN. 4 points / 16 points
31-46		CRC
47-50	1111	Fill Bits

F. Phase 3 .....Training of the main channel equalizer

- Band division full-duplex method
- Transmission and reception of Phase 3 signals (S, $\bar{S}$, PP, TRN) are executed by using parameter values which are determined by exchanging INF Oh. (symbol rate, carrier frequency, pre-emphasis filter and transmission level)

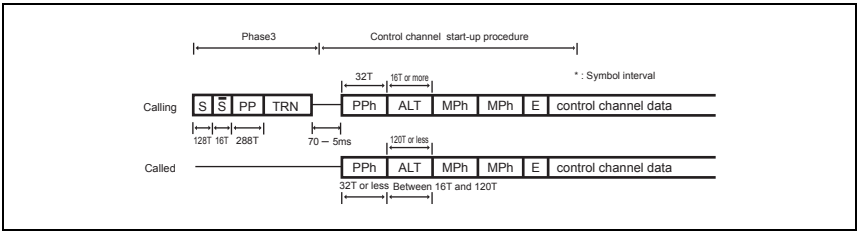

- The speed of the following signals (Phase 3) are determined by INFOh. (The following signals are used in the main channel in the half-duplex procedure.)

  S :Signal which sends alternately 0 point and a point which rotated 0 point counterclockwise by 90 degrees

  $\bar{S}$:Signal which sends alternately a point which rotated 0 point counterclockwise by 180 degrees and a point which rotated 0 point counterclockwise by 270 degrees

  PP :Special signal which is sent from a remote station for adjusting an equalizer

  TRN :Training signal. (Symbol rate and duration are determined in INFOh.)

(1) Control channel signal

- The following signals are used for establishing the control channel or re-synchronization and retrain. (peculiar to half-duplex procedure)

  Modulation method:

  1200 / 2400bps QAM modulation (600 ± 0.01 symbols / sec). However, training and synchronous signals are 1200bps.

  Calling modem: Carrier (=1200Hz ± 0.01% (level = set value))

  Called modem: Carrier (=2400Hz ± 0.01% (level = set value-1dB))

  +Guard tone (=1800Hz ± 0.01% (level = set value-7dB))

  Sh :Signal which sends alternately 0 point and a point which rotated 0 point counterclockwise by 90 degrees (the same as S)

  $\bar{S}h$:Signal which sends alternately a point which rotated 0 point counterclockwise by 180 degrees and a point which rotated 0 point counterclockwise by 270 degrees (the same as S)

  AC :Signal which send alternately 0 point and a point which rotated 0 point by 180 degrees

  PPh :Special signal which is sent from a remote station for adjusting an equalizer (used when the initial of the control channel and re-synchronization are executed)

  ALT :Signal which scrambled alternate signals of 0 and 1 (1200bps)

  MPh :Binary signal used for exchanging parameters of the modulation method when data is actually sent and received by using the main channel

  (Both type 0 and type 1 (type 0+pre-recording coefficient) must be received.)

  (When type 0 is received, pre-recording coefficient is considered to be 0 and never functions.)

  E : “1”, binary of 20 bit, which represents the beginning of user data transmission on the control channel

(2) MPh (type 0) bit assignment

Bits (LSB-MSB)	Value	Meaning
0-16	All bit 1	Bit string for frame synchronization
17	0	Start bit
18	0	MP signal type
19	0	Reserved
20-23	1 to 14	Maximum transmission rate from the calling modem to the called modem (x 2400) *1
24-26	0,0,0	Reserved
27	0/1	Control channel data transmission rate which is selected by the opposed transmitter 1200bps / 2400 bps
28	0	Reserved
29-30		Trellis coding device selection *2 (00: 16 state, 10: 32 state, 01: 64 state and 11: Reserved)
31	0/1	Non-linear encoder parameter selection for the terminal transmitter of a remote station *2 (0: ϕ =0, 1: ϕ 0.3125)
32	0/1	Parameter (shaping) selection when the data rate is determined within each symbol rate *2 (0: Minimum, 1: Expanded)
33	0	Reserved
34	0	Start bit
35-49		Communication speed mask (0/1=Ability of both modems disabled / enabled) (Bit35=2400 bps ... Bit46=28.8 kbps, Bit47=31.2 kbps, Bit48=33.6 kbps and Bit49=Reserved)
50	0/1	Use of control channel imbalance data rate No / Yes
51	0	Start bit
52-67	0	Reserved
68	0	Start bit
69-84		CRC
85-87	0,0,0	Fill Bits

*1: 13 and 14 are used when the opposed modem supports up to 1664 points
*2: Set to 0 on the transmitting modem.

(3) MPh (type 1) bit assignment

Bits (LSB-MSB)	Value	Meaning
0-16	All bit 1	Bit string for frame synchronization
17	0	Start bit
18	1	MP signal type
19	0	Reserved
20-23	1 to 14	Maximum transmission rate from the calling modem to the called modem (x 2400) *1
24-26	0,0,0	Reserved
27	0/1	Control channel data transmission rate which is selected by the opposed transmitter 1200bps / 2400 bps
28	0	Reserved
29-30		Trellis coding device selection *2 (00: 16 state, 10: 32 state, 01: 64 state and 11: Reserved)
31	0/1	Non-linear encoder parameter selection for the terminal transmitter of a remote station *2 (0: ϕ =0, 1: ϕ 0.3125)
32	0/1	Parameter (shaping) selection when the data rate is determined within each symbol rate *2 (0: Minimum, 1: Expanded)
33	0	Reserved
34	0	Start bit
35-49		Communication speed mask (0/1=Ability of both modems disabled / enabled) (Bit35=2400 bps ... Bit46=28.8 kbps, Bit47=31.2 kbps, Bit48=33.6 kbps and Bit49=Reserved)
50	0/1	Use of control channel imbalance data rate No / Yes
51	0	Start bit
52-67		Pre-coding coefficient h(1) Real
68	0	Start bit
69-84		Pre-coding coefficient h(1) Imaginary
85	0	Start bit
86-101		Pre-coding coefficient h(2) Real
102	0	Start bit
103-118		Pre-coding coefficient h(2)Imaginary
119	0	Start bit
120-135		Pre-coding coefficient h(3) Real
136	0	Start bit
137-152		Pre-coding coefficient h(3)Imaginary
153	0	Start bit
154-169		Reserved
170	0	Start bit
171-186		CRC
187	0	Fill Bits

*1: 13 and 14 are used when the opposed modem supports up to 1664 points
*2: Set to 0 on the transmitting modem.

G. Re-synchronization procedure / Startup procedure

- A procedure required to switch control channel and main channel in the half-duplex procedure
- A procedure which includes another modulation parameter exchanging is especially called the startup procedure. (used for changing the communication speed)

(1) Startup procedure

- Control channel startup procedure: See the 3-3 figure. (By exchanging MPh, the communication speed is changed.)
- “Control channel re-synchronization procedure” is not used.

(2) Re-synchronization procedure

- Control channel re-synchronization See signals related to control channels in 3-3 for signal names and change method.

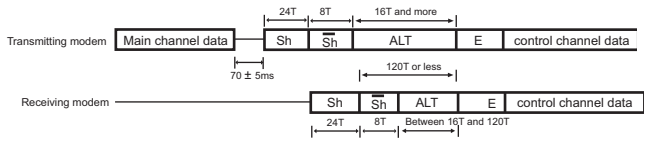

Main channel re-synchronization procedure and Turn-off

- The receiving modem re-synchronizes the main channel by using the PP signal. After B1, starts receiving Primary Data.
- The transmitting modem sends the scrambled 1’s for 35ms after Primary Data transmission has been completed.
- Both modems move to the control channel re-synchronization procedure or the control channel startup procedure.

S :Signal which sends alternately 0 point and a point which rotated 0 point counterclockwise by 90 degrees

$\overline{S}$:Signal which sends alternately a point which rotated 0 point counterclockwise by 180 degrees and a point which rotated 0 point counterclockwise by 270 degrees

PP :Special for adjusting an equalizer

B1 :High-speed signal of one frame length which is sent at the end of a series of startup sequence in the selected modulation parameter.

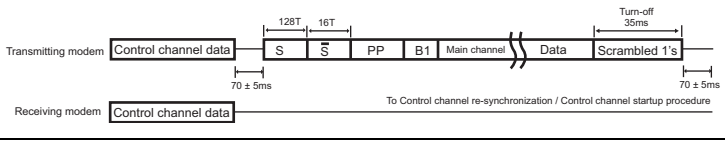

H. Others

(1) Minimum reception signal level (RLSD) (half-duplex mode only)

- The reception circuit is turned to On when the signal becomes 43 dBm or more
- When the signal becomes 48 dBm or less, the reception circuit is turned Off within 20 to 25ms after it has exceeded the thresh old.

(2) Data frame structure

- All data transmitted in V.34 (after the Phase 4) is treated in the following frame format.
  J :The number of data frames within one super frame
  P :The number of mapping frames within one data frame

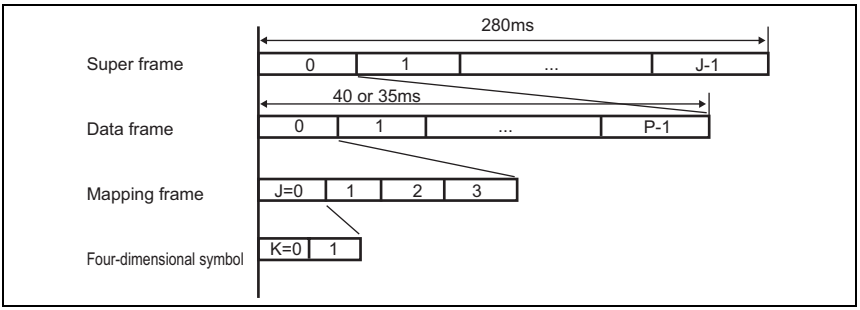

Modulation Speed	J	P
2400 baud	7	12
2743 baud	8	12
2800 baud	7	14
3000 baud	7	15
3200 baud	7	16
3429 baud	8	15

2.2 Telephone function

2.2.1 TEL/FAX switching

A. Outline

- A function to switch telephone and FAX automatically after reception. Depends on Country spec.

B. Operation

1. When CNG is not detected for 2 seconds (or 4 seconds, following parameter) after line seizure, this function sends voice response message 1 and continues CNG detection.
2. If voice response 1 is sent and CNG detection is continued for 4 seconds but could not be detected, external ringer is sent to the externally installed phone.
3. When CNG is not detected for a given period (Default is 20 seconds. Changeable by address parameters), this function stops external ringer transmission and becomes fax reception after the voice response message 2 is sent.
4. This function detects OFF-HOOK of the external telephone during external ringer transmission only.
5. When OFF-HOOK of the external telephone is detected during external ringer transmission, the line is connected to the external telephone. Even if you use the telephone, you can manually switch to the fax reception after that.
6. When CNG is detected during the above-mentioned external ringer transmission, External ringer transmission is stopped and the fax reception starts.

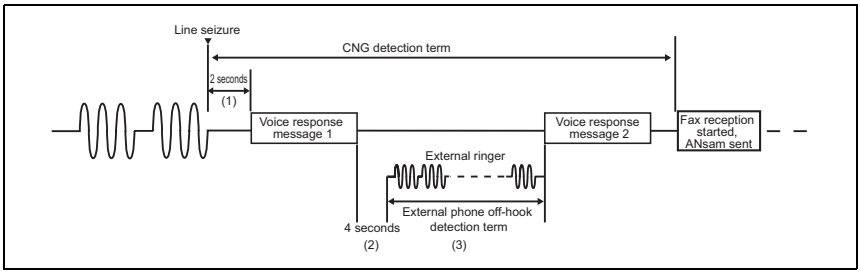

No.	FP	Meaning and purpose	Address	Value	Default	Note
1	Tel-Fax switching	External telephone off-book detection function	0x0e0095 bit5	0: No 1: Normal (RBT transmission)	0	Those with a Administrator Settings
2	RBT transmission time	External ringer transmission time (3) (in steps of 1 second)	0x0e00eb	unit: 1000 ms, HEX	0x14 (20 sec.)	A serviceman setting by address setting
3	Tel-Fax switching parameter	Time from vocal response to RBT transmission (CNG detection waiting time 2)	0x0e0095 bit7	0: 2 sec 1: 4 sec	0	Same as the above
4	Tel-Fax switching parameter	Time from reception to voice response transmission (CNG detection waiting time 1)	0x0e0095 bit6	0: 4 sec 1: 2 sec	0	Same as the above

No.	FP	Meaning and purpose	Address	Value	Default	Note
5	Tel-Fax switching parameter	TEL/FAX switching ON response details	0x0e0095 bit3	0: Voice response + RBT transmission 1: RBT transmission only	0	Same as the above

3. EXPLANATION OF FUNCTIONS

3.1 F-code

- F-code is a function to realize confidential transmission / bulletin board polling / relay transmission by using SUB, SEP and SID signals.
- To be more specific, a machine which can open “a box” on the memory is called “a F code compliant center machine” and a machine which can access to a center machine by using the F code function is called “a F-code compliant machine.” The center machine can have plural “boxes” and they are used as the confidential box, bulletin board box and relay box respectively.

Function	Outline	Signals to be used				Required function	Remarks
		SUB	SEP	SID			
Confidential transmission	Sent to the center machine which opens a confidential box by appointing the confidential box No. (The center machine has memory reception to the confidential box.)	Used	Not	Optional	SUB = Appointment of a confidential box SID = Password	Registration = Message adding	Each box No. = Contents of a signal (20 digits or less)
Bulletin board polling	By appointing a box No. in the center machine which opens a bulletin board, contents are polled.	Not	Used	Not	SUB = Appointment of a bulletin board box	Registration = Message overwriting With a mode which is not deleted by polling	
Relay transmission	Requesting relay to the relay machine which opens a relay box (No.) in which a broadcasting transmission remote station is registered.	Used	Not	Used	SUB = Appointment of a relay box (No.) SID = Password		

3.1.1 Signal format

A. Contents of signals

Item / Signal Name	SUB/SEP	SID
Characters	0 to 9 only (* and # must not be used.)	0 to 9, * and #
Contents	Box No.	Password
No. of digits	Arbitrary between 1 and 20	
Space between digits	Prohibited	
Others	Impossible to designate more than one box	

(1) FIF (SUB/SEP/SID) common

- The last digit is left-justified. The remaining are filled with space (0x20)

eg.) 12345

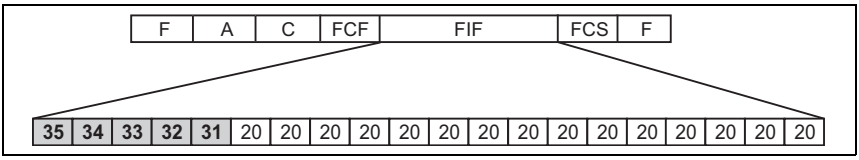

B. DIS/DTC/DCS bit condition

Bit No.	Meaning	DIS/DTC	DCS
47	Selective polling ability	DIS = ON when SEP reception is possible DTC = On when SEP is transmitted	0: fixed
49	Sub address ability / function	ON when SUB reception is possible	ON when SUB transmission is possible
50	Password / sender ID	DIS = ON when SID reception is possible DTC = On when SID is transmitted	ON when SID is transmitted

3.1.2 F-Code confidential transmission

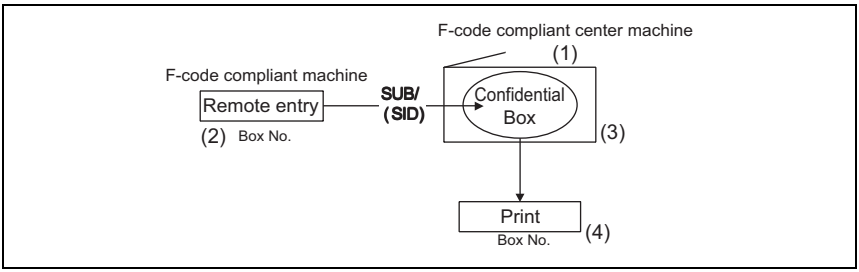

(1) The confidential box is registered in the center machine.

- Registration of confidential box No. and name
- Registration of communication password
- Registration of box password

(2) Transmission operation on the transmitting side

- Specification of confidential box No.

(3) Reception in the center machine

- Automatic output of confidential communication report

(4) Printing in the center machine

- Output by entering an access protect No.

A. BOX specifications

Confidential box No.	Represented by a nine digit number. Operationally between 1 and 999999999. You can not open the same box number as the bulletin board No. which has been already opened.
Communication password	Possible to use.
Confidential BOX name	Possible to resister up to 10 characters.
Erased at printing	Erased on every page after output.
Box password	Represented by a four digit number between 0000 and 9999.

No. of files in confidential box100 files at the maximum including bulletin board.

B. Example of the protocol sequence

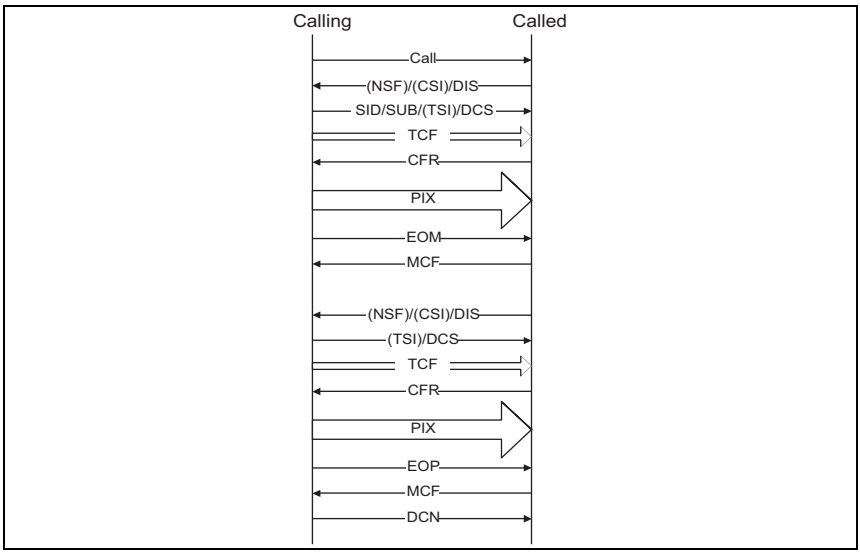

3.1.3 F-code bulletin board polling

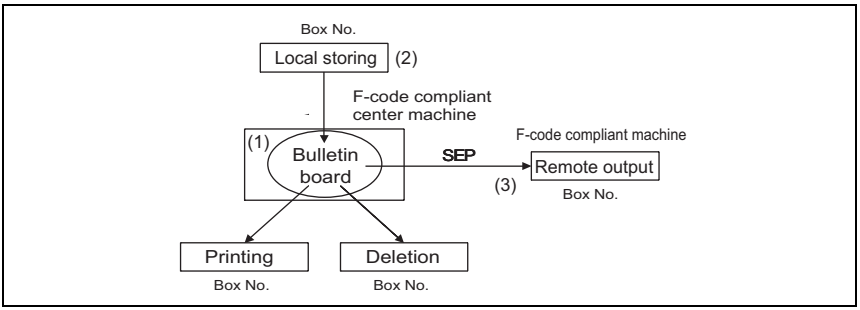

1. Registration of the bulletin board box in the center machine
- Registration of the bulletin board No. and name

2. Storing documents in the bulletin board
3. Operations for polling reception on the compliant machine
- Appointment of bulletin board No.

A. BOX specifications

Bulletin board box No.	Represented by a nine digit number. Operationally between 1 and 999999999. You can not open the same box number as the confidential box which has been already opened.
Bulletin board password	No
Bulletin board box name	Yes 10 character max
Erased at printing	Not erased when printed.
Erased at polling	Not erased when polled.
Access protect No.	No
No. of document registration to the bulletin board box	Only once. If already exist, it is overwritten.

B. Example of protocol sequence

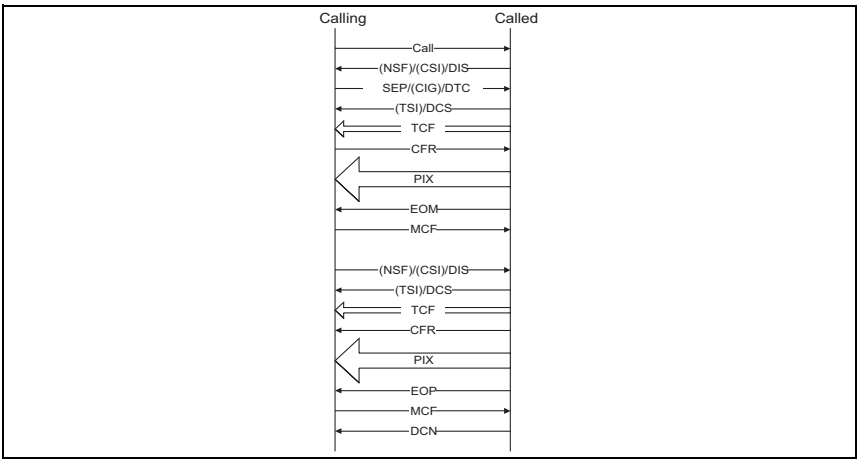

3.1.4 F-code relay transmission

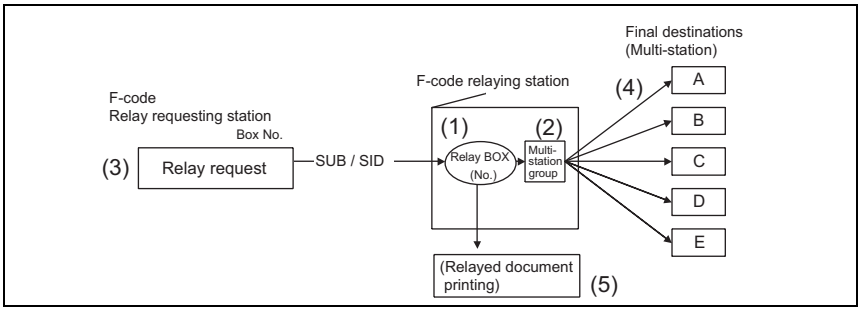

NOTE

- **This machine is only relay requests and do not function as a relaying station.**

1. The relay box is registered in the relaying station.
- Registering relay box No., relay password and relay group No.

2. Registration of group
- Registering final destinations in the group No.

3. Transmission operation in the relay requesting station
- Instructs relay box no. and relay password.

4. Transmission to the final remote stations registered in the group
5. Possible to printed relayed documents on the relaying station (depends on the parameter setting)

A. BOX specifications

Relay box	Possible to register up to 5.
Relay box No.	Any box number that can range between 1 and 999999999
Relay password	Any 8-digit number
Relay BOX name	To be assignable
Access protect No.	No
Final destination designation	Possible only to register in the relay box by appointing the group.
File erasure after transfer	Always erased
Conditions to erase box by operations	Only when there are no files of received messages in the relay box, box can be erased.

B. Protocol sequence example

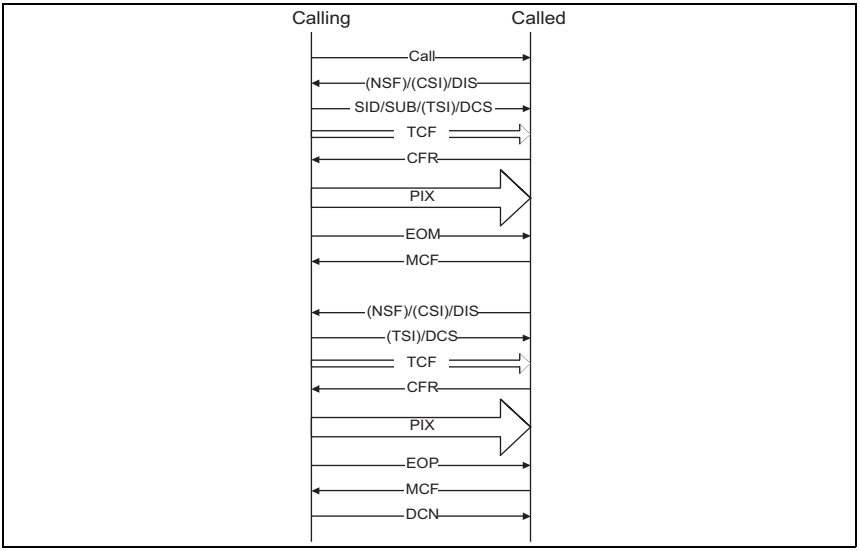

3.2 Transmission function

3.2.1 Original scan mode

- The original scan mode is roughly classified by the regular original scan and the irregular original scan.

Regular original	Irregular original	Mode selection
Normal mode	Irregular mode	Default setting
Mixed original mode		Scan setting

<Scan mode default setting>

- The scan mode can be set by using the function parameter of the service mode. The default is the ADF irregular mode.

	Paper size detection	Default	Frame erasure
Irregular mode	Trailing edge detection	Yes	Trailing edge erasure may not be done.
Normal mode	ADF paper size sensor	Automatically selected when using the page related application function (book transmission, etc.).	Frame erasure of all sides

3.3 Reception function

3.3.1 Reduction / division of reception

- Parameters related to reduction / division are set on the [Utility/Counter] > [Administrator Setting] > [Fax Setting] > [TX/RX Setting]. There are two parameters as follows:
  "Min. Reduction for RX Print" 96, 95, 94, ..., 87 a
  "Print Separate Fax Pages" ON, OFF b

The reception recording mode is determined by the above-mentioned parameters, a and b.

A. Auto reduction reception mode

a = Don't care (except 100)
b = OFF
The received documents are automatically reduced in the range of 35 to 96 %.
Page division recording reception mode
a = 96, 95, ..., 87
b = ON
Documents are reduced to three reduction rate (90 %, 86 %, or 82 %) determined by the width of received documents and the selected recording paper. When they are still larger than a paper size, they are reduced to a value in "a" for the division recording.
90% = Fixed value
86%, 82% = Reduction rate determined by the main scanning direction
The paper selection and division are determined in accordance with the following figure.

B. Paper selected for division printing, magnification

(1) A4SEF width at reception

Original length =Received original size*(1/a)	Optimum paper	Selected paper size / Division operation							
		Priority 1	Priority 2	Priority 3	Priority 4	Priority 5	Priority 6	Priority 7	Priority 8
152mm or less	A5LEF	A5LEF / a %	A5SEF / 69 %	A4SEF / a %	A4LEF / a %	B5SEF / 84 %	B5LEF / a %	B4SEF / a %	A3SEF / a %
153 - 311mm	A4SEF	A4SEF / a %	A4LEF / a %	B4SEF / a %	A3SEF / a %	-	-	-	-
312 - 384mm	B4SEF	B4SEF / a %	B5LEF / a %	B5SEF / 84 %	A3SEF / a %	A4LEF / a %	A4SEF / a %	-	-
Over 384mm	A3SEF	A3SEF / a %	A4LEF / a %	B5SEF / 84 %	-	-	-	-	-

(2) B4SEF width at reception

Original length =Received original size *(1/a)	Optimum paper	Selected paper size / Division operation							
		Priority 1	Priority 2	Priority 3	Priority 4	Priority 5	Priority 6	Priority 7	Priority 8
189mm or less	B5LEF	B5LEF / a %	B5SEF / 71 %	B4SEF / a %	A4SEF / 82 %	A4LEF / a %	A3SEF / a %	-	-
189 - 384mm	B4SEF	B4SEF / a %	B5LEF / a %	B5SEF / 71 %	A3SEF / a %	A4LEF / a %	A4SEF / 82 %	-	-
Over 384mm	A3SEF	A3SEF / a %	A4LEF / a %	A4SEF / 82 %	-	-	-	-	-

(3) A3SEF width at reception

Original length =Received original size *(1/a)	Optimum paper	Selected paper size / Division operation							
		Priority 1	Priority 2	Priority 3	Priority 4	Priority 5	Priority 6	Priority 7	Priority 8
219mm or less	A4LEF	A4LEF / a %	A4SEF / 69 %	B4SEF / 85 %	A3SEF / a %	-	-	-	-
Over 219mm	A3SEF	A3SEF / a %	A4LEF / a %	A4SEF / 69 %	-	-	-	-	--

a : Set magnification

3.3.2 Cassette / paper selection

- The cassette and paper selection is performed by using two parameters of the [Utility/Counter] > [Administrator Setting] > [Fax Setting] > [TX/RX Setting].
  "Print Paper Selection" Auto Select, Fixed Size, Priority Size a
  "Tray Selection for RX Print" Auto, Tray 1, Tray 2, Tray 3 and Tray 4 b

When "b" is fixed to tray 1, 2, 3 or 4, "a" becomes invalid.
Only when "b" is set to Auto, "a" becomes valid.
Only A3, B4 and A4 sizes can be selected for the fixed size and preferential size modes.
Bypass cannot be specified as fix-tray.
Page dividing function becomes invalid when the tray is fixed.

3.3.3 Compulsory memory reception

- The function to enable to print out by operations without printing out documents at reception in the FAX communications.

A. Related settings

(1) Compulsory memory reception function

- Set in the Service menu > [FAX] > [System].
- When this setting is set to OFF, display and actions related to the Compulsory memory reception are not performed. In addition, you can not perform operations. If this setting is not set, the following Compulsory memory reception function used is also set to disabled.

(2) Compulsory memory reception function use

- Set in the [Utility/Counter] > [Administrator Setting] > [Fax Setting] > [Function Setting].
- When this setting is set to disabled, the compulsory memory reception actions are not performed at reception. In addition, you can not display, erase and print the compulsory memory reception documents. The compulsory memory reception documents are displayed on the main menu irrelevant to this setting.

(3) Compulsory memory reception password

- Within eight digits (eight-digit number)
- Set in the [Utility/Counter] > [Administrator Setting] > [Fax Setting] > [Function Setting].
- This setting is required to display, delete or print the compulsory memory reception documents.

B. Operation

(1) Necessary conditions for this function

- When there is the compulsory memory reception function, and it is used, the compulsory memory reception action is performed.

(2) Line seizure

- It is possible to receive up to 100 compulsory memory reception jobs including the normal reception and the substitute reception. When 100 compulsory memory reception jobs are received, machine will not catch the line. (Except the case that the polled transmission documents and bulletin board documents are registered.)

(3) Reception

- When the reception is performed in the compulsory memory reception mode, printing is not performed even with recording paper and the reception is performed in memory as the compulsory memory reception documents.
- The same as in the polled reception and manual reception.
- The auto forwarding setting is neglected in this mode, and the compulsory memory reception is performed.
- When SUB is received, related applications will start.

(4) Setting change

- When there are received compulsory memory reception documents, even if the compulsory memory reception setting is set to invalid in the utility mode, the compulsory memory reception file is not printed.
- For printing, the compulsory memory reception setting is required to be set to “ON.”

3.3.4 Closed reception (Junk FAX)

- The closed reception function used only at the time of the reception by using the F-code SID signal.

(1) Closed reception function

- Set in the service menu > [FAX] > [System].

(2) Closed reception function use

- Set in the [Utility/Counter] > [Administrator Setting] > [Fax Setting] > [Function Setting].
- When this setting is set to disabled, the closed reception actions are not performed at reception.

(3) Closed reception password

- 8 digits or less (Utility Mode setting, 0 to 9, * and #)

NOTE

- **You can not use this function with the F-code communications.**

3.4 Management function

3.4.1 Operation without the key counter

A. Related settings

(1) Transmission without the key counter

- Set in the Service menu > [FAX] > [System].
- FAX transmission is inhibited when this setting is set to OFF and there is no key counters (default).

FAX operations without the key counter

- The following show the settings without the key counter and whether operations / actions start requests are accepted or not.

Operation	When disabled	When enabled	Remarks
Transmission	No	Yes	
Polling reception	No	Yes	
Manual reception	No	Yes	
Auto FAX communication / Printer data reception /Auto print	Yes	Yes	
Report printing in the utility mode (FAX)	No	No	
Report printing	No	No	
Report print in the utility mode (copy)	No	No	

Pulling out the key counter during FAX operations

- The following show settings and their actions when the key counter is pulled out during actions

Actions	When disabled	When enabled	Remarks
While scanning the quick memory transmission	Stop scanning (transmitted those already scanned)	No influence	
While scanning the memory transmission	Stop scanning (does not transmit)	No influence	
FAX communication	No influence	No influence	
While printing the FAX reception	No influence	No influence	
While printing the printer	No influence	No influence	
While printing the auto report	No influence	No influence	
During report print of the utility mode (FAX)	No influence	No influence	
During report print of 36 modes	Follows DIPSW 1-0	Follows DIPSW 1-0	
While report print of the utility mode	Follows DIPSW 1-0	Follows DIPSW 1-0	

MAINTENANCE

4. OTHER MAINTENANCE ITEM

4.1 Items not allowed to be disassembled and adjusted

A. Paint-locked screws

NOTE

- **To prevent loose screws, a screw lock in blue or green series color is applied to the screws.**
- **The screw lock is applied to the screws that may get loose due to the vibrations and loads created by the use of machine or due to the vibrations created during transportation.**
- **If the screw lock coated screws are loosened or removed, be sure to apply a screw lock after the screws are tightened.**

B. Red-painted screws

NOTE

- **The screws which are difficult to be adjusted in the field are painted in red in order to prevent them from being removed by mistake.**
- **Do not remove or loosen any of the red-painted screws in the field. It should also be noted that, when two or more screws are used for a single part, only one representative screw may be marked with the red paint.**

C. Variable resistors on board

NOTE

- **Do not turn the variable resistors on boards for which no adjusting instructions are given in Adjustment/Setting.**

D. Removal of PWBs

⚠ CAUTION

- **When removing a circuit board or other electrical component, refer to “Handling of PWBs” and follow the corresponding removal procedures.**
- **The removal procedures given in the following omit the removal of connectors and screws securing the circuit board support or circuit board.**
- **Where it is absolutely necessary to touch the ICs and other electrical components on the board, be sure to ground your body.**

4.2 Disassembly/reassembly parts list

Section	Part name	Ref. page
Board and etc.	FAX board	P.56
	FAX board (Extension line)	P.57

4.3 Disassembly/reassembly procedure

4.3.1 FAX board

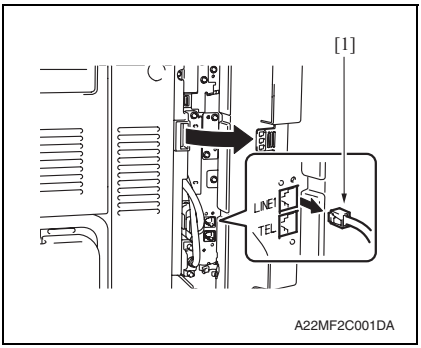

1. Open the door located on the right side of the main body.
2. Disconnect the modular cable [1].

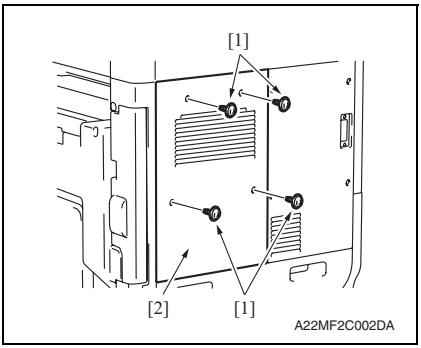

3. Remove four screws [1], and remove the rear cover/1 [2].

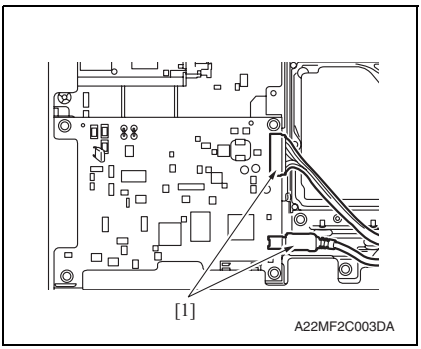

4. Disconnect two cables [1].

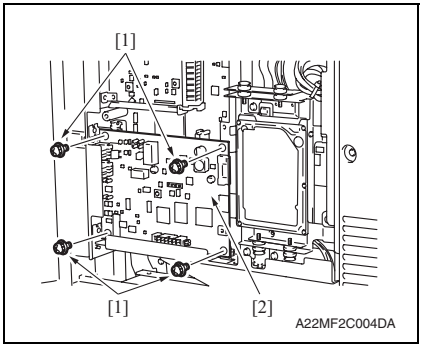

5. Remove four screws [1], and remove the FAX board [2].

NOTE

- **For installation of the FAX board, push the fax board against the main body to remove clearance between the main body plate and the fax board.**

6. Reinstall the above parts following the removal steps in reverse.

4.3.2 FAX board (Extension line)

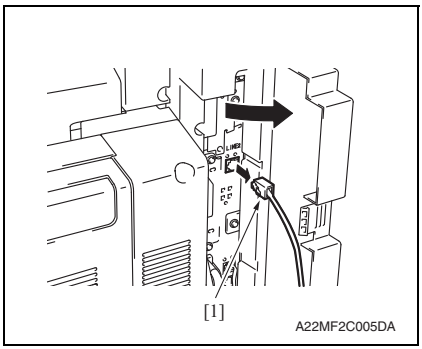

1. Open the door located on the right side of the main body.
2. Disconnect the modular cable [1].

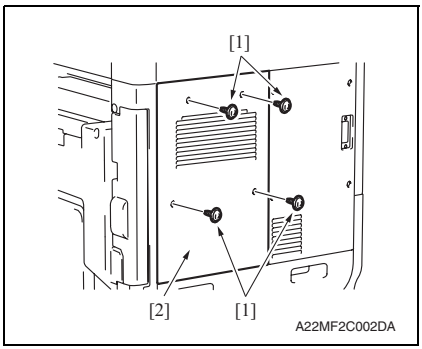

3. Remove four screws [1], and remove the rear cover/1 [2].

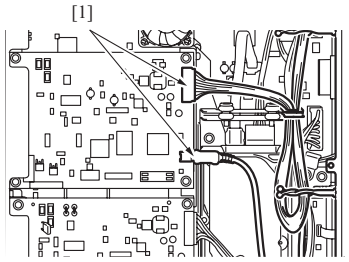

A22MF2C006DA

4. Disconnect two cables [1].

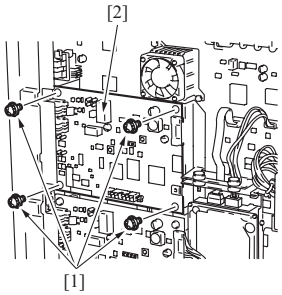

A22MF2C007DA

5. Remove four screws [1], and remove the FAX board [2].

NOTE

- **For installation of the FAX board, push the fax board against the main body to remove clearance between the main body plate and the fax board.**

6. Reinstall the above parts following the removal steps in reverse.

NOTE

- **When installing the cable [1], retract it to the back side of the cable clamp [2] so that the cable [1] does not run behind the screw hole.**

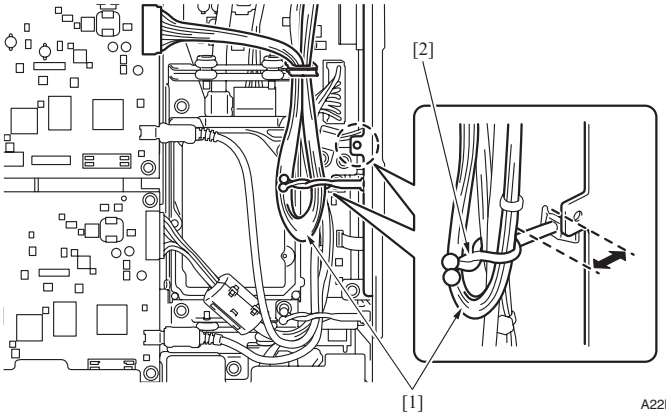

A22MF2C008DA

4.4 Configuration of the FK-508 board

- The following shows the configuration of the FK-508.

NOTE

- **When using it as a main line, set SW2 to [LINE-1].**
- **When using it as a sub line, set SW2 to [LINE-2].**

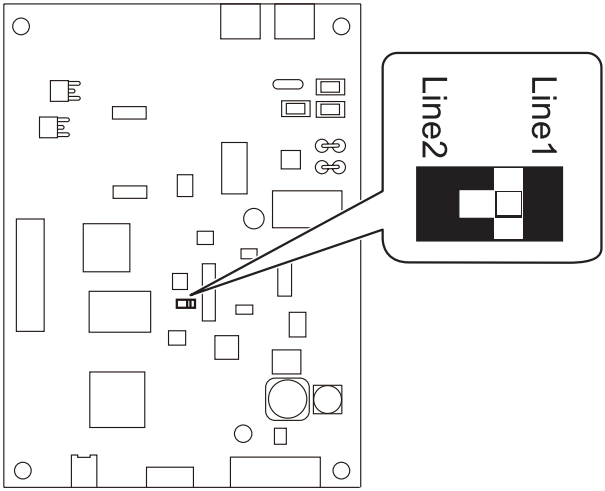

A22MF2C009DA

Blank Page

KONICA MINOLTA

SERVICE MANUAL

FIELD SERVICE

DF-621/SP-501

2012.02

KONICA MINOLTA BUSINESS TECHNOLOGIES, INC. Ver. 1.1

Revision history

After publication of this service manual, the parts and mechanism may be subject to change for improvement of their performance.
Therefore, the descriptions given in this service manual may not coincide with the actual machine.

When any change has been made to the descriptions in the service manual, a revised version will be issued with a revision mark added as required.

Revision mark:

- To indicate clearly a section revised, ⚠1 is shown at the left margin of the revised section.
  The number inside ⚠1 represents the number of times the revision has been made.

- To indicate clearly a page that contains the revision, ▲1 is shown near the page number of the corresponding page.
  The number inside ▲1 represents the number of times the revision has been made.

NOTE

Revision marks shown in a page are restricted only to the latest ones with the old ones deleted.

- When a page revised in Ver. 2.0 has been changed in Ver. 3.0:
  The revision marks for Ver. 3.0 only are shown with those for Ver. 2.0 deleted.
- When a page revised in Ver. 2.0 has not been changed in Ver. 3.0:
  The revision marks for Ver. 2.0 are left as they are.

Date	Service manual Ver.	Revision mark	Descriptions of revision
2012/02	1.1	⚠1	Error correction
2010/04	1.0	—	Issue of the first edition

CONTENTS

DF-621/SP-501

OUTLINE

1. PRODUCT SPECIFICATIONS 1

MAINTENANCE

2. PERIODICAL MAINTENANCE PROCEDURE 5
2.1 Take-up section 5
2.1.1 Cleaning of the pick-up roller/feed roller 5
2.1.2 Cleaning of the separation roller 5
2.1.3 Replacing the pick-up roller / feed roller 6
2.1.4 Replacing the separation roller 8
2.2 Transport section 9
2.2.1 Cleaning of the miscellaneous rolls 9
2.2.2 Cleaning of the miscellaneous rollers 10
2.3 Scanning section 11
2.3.1 Cleaning of the cleaning shaft 11
2.3.2 Cleaning of the reflective sensor section 12
3. OTHER MAINTENANCE ITEM 13
3.1 Items not allowed to be disassembled and adjusted 13
3.2 Disassembly/reassembly parts list 14
3.3 Disassembly/reassembly procedure 14
3.3.1 Front cover 14
3.3.2 Rear cover 15
3.3.3 Upper door cover 15
3.3.4 Document feed tray rear cover 16
3.3.5 Reverse automatic document feeder 17
3.3.6 Glass cleaning brush 19
3.3.7 DF control board (DFCB) 19
3.3.8 Document CD size sensor (VR1) 20
3.3.9 Document reading motor (M1) 20
3.3.10 Document feed motor (M2) 21
3.3.11 Reading roller release motor (M3) 21
3.3.12 Glass cleaning motor (M4) 22
3.3.13 DF cooling fan motor (FM1) 23
3.3.14 Document feed clutch (CL1) 23

3.3.15 Document registration clutch (CL2) 24
3.3.16 Document exit roller release solenoid (SD1) 25
3.3.17 Stamp unit 26
4. SERVICE TOOL 27
4.1 CE tool list 27

ADJUSTMENT/SETTING

5. HOW TO USE THE ADJUSTMENT SECTION 29
6. MECHANICAL ADJUSTMENT 30
6.1 Mechanical adjustment of the original document feed section 30
6.1.1 Adjusting the height 30
6.1.2 Adjusting skew feed 31

OUTLINE

1. PRODUCT SPECIFICATIONS

A. Type

Name	Reverse automatic document feeder	
Type	Feeding order	Forward
	Feed section	Paper feed from top of stack
	Switchback section	Switch back system
	Exit section	Straight exit system
Installation	Screw cramp to the main body	
Document alignment	Center	
Document loading	Left image side up	

B. Functions

Modes	1-sided mode / 2-sided mode

C. Paper type

Type of document	Standard mode (Plain paper)	1-sided mode 35 to 128 g/m^2 (9.25 to 34 lb)	
		2-sided mode 50 to 128 g/m^2 (13.25 to 34 lb)	
	Mixed original detection mode (Plain paper)	1-sided / 2-sided mode 50 to 128 g/m^2 (13.25 to 34 lb)	
	FAX mode (Plain paper)	1-sided mode 35 to 128 g/m^2 (9.25 to 34 lb)	
		2-sided mode 50 to 128 g/m^2 (13.25 to 34 lb)	
Detectable document size	Standard mode	Metric area	A6S to A3
		Inch area	5.5 x 8.5 to 11 x 17
	Mixed original detection mode	For the mixed original detection mode, refer to the mixed original feed chart.	
	FAX mode	Metric area	Standard size: A5 to A3 Width: 100 to 297 mm Length (1-sided mode): 139.7 to 1,000 mm Length (2-sided mode): 139.7 to 431.8 mm
		Inch area	Standard size: 5.5 x 8.5 to 11 x 17 Width: 3.95 to 11.69 inch Length (1-sided mode): 5.5 to 39.37 inch Length (2-sided mode): 5.5 to 17 inch
Capacity	100 sheets (80 g/m^2 (21.25 lb))		

D. Paper feed prohibited originals

- If fed, trouble occurrence will be highly possible.

Type of original	Possible trouble
Original that is stapled or clipped.	Feed failure, damaged sheet, or drive failure due to clip clogging
Book original	Feed failure, damaged sheet, or drive failure
Original weighing less than 35g/m^2 or more than128g/m^2	Feed failure
Torn original	Feed failure, damaged sheet
Highly curled original (15 mm or more)	Original misfeed due to dog-ear or skew
OHP transparencies	Feed failure
Label sheet	Feed failure
Offset master	Feed failure
Glossy photographic paper or glossy enamel paper	Feed failure
Sheets clipped or notched	Damaged sheet
Sheets patched	Patched part folded or torn sheet

E. Paper feed not guaranteed originals

- If fed, paper feed will be possible to some extent but trouble occurrence will be possible.

Type of original	Possible trouble
Sheets lightly curled (Curled amount: 10 to 15 mm)	Dog-eared, exit failure
Heat sensitive paper	Edge folded, exit failure, transport failure
Coated paper (Ink jet paper)	Take-up failure, transport failure
Translucent paper	Take-up failure, transport failure
Paper immediately after paper exit from the main unit	Take-up failure, transport failure
Paper with many punched holes (e.g., loose leaf) limited to vertical feeding*	Multi-page feed due to flashes from holes
Sheets with 2 to 4 holes*	Transport failure
Sheets folded (e.g., sheets two-folded or Z-folded)	Take-up failure, transport failure, image deformation, multi-page feed

*: Before using loose leaf or folded original, straighten the perforations or fold first.
The permissible lift amount is 15 mm or less.

F. Mixed original feed chart

For metric

	Max. original size	297 mm		257 mm		210 mm		182 mm	148 mm	128 mm
Mixed original size		A3	A4	B4	B5	A4S	A5	B5S	A5S	A6S
297 mm	A3	OK	OK	-	-	-	-	-	-	-
	A4	OK	OK	-	-	-	-	-	-	-
257 mm	B4	OK	OK	OK	OK	-	-	-	-	-
	B5	OK	OK	OK	OK	-	-	-	-	-
210 mm	A4S	OK	OK	OK	OK	OK	OK	-	-	-
	A5	NG	NG	OK	OK	OK	OK	-	-	-
182 mm	B5S	NG	NG	OK	OK	OK	OK	OK	-	-
148 mm	A5S	NG	NG	NG	NG	NG	NG	OK	OK	-
128 mm	B6S	NG	NG	NG	NG	NG	NG	NG	OK	OK

For inch

	Max. original size	11		8.5			5.5
Mixed original size		11 x 17	8.5 x 11	8.5 x 14	8.5 x 11S	5.5 x 8.5	8.5 x 5.5S
11	11 x 17	OK	OK	-	-	-	-
	8.5 x 11	OK	OK	-	-	-	-
8.5	8.5 x 14	OK	OK	OK	OK	OK	-
	8.5 x 11S	OK	OK	OK	OK	OK	-
5.5	8.5 x 5.5	NG	NG	OK	OK	OK	-
	8.5 x 5.5S	NG	NG	NG	NG	NG	OK

OK	Mixed original feed available (Tilted with in 1.5 % or less)
NG	NO. mixed original feed
-	Can not set original

G. Machine specifications

Power requirements	DC 24 V (supplied from the main body)
	DC 5 V (supplied from the main body)
Max. power consumption	60 W or less
Dimensions	596 mm (W) x 542 mm (D) x 116 mm (H) * excluding the protruding part 23.46 inch (W) x 21.34 inch (D) x 4.57 inch (H)
Weight	11.5 kg (25.35 lb) or less

H. Operating environment

- Conforms to the operating environment of the main body.

NOTE

- **These specifications are subject to change without notice.**

Blank Page

MAINTENANCE

2. PERIODICAL MAINTENANCE PROCEDURE

NOTE

- **The alcohol described in the cleaning procedure of maintenance represents the isopropyl alcohol.**

2.1 Take-up section

2.1.1 Cleaning of the pick-up roller/feed roller

A. Periodically cleaning parts/cycle

- Pick-up roller: Every 50,000 counts
- Feed roller: Every 50,000 counts

B. Procedure

1. Open the upper door.

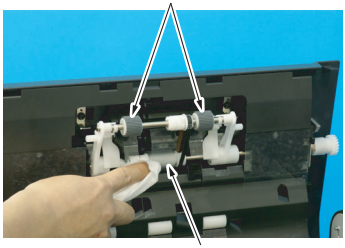

A143F2C001DA

2. Using a cleaning pad with alcohol, wipe the pick-up rollers [1] / feed roller [2] clean of dirt.

2.1.2 Cleaning of the separation roller

A. Periodically cleaning parts/cycle

- Separation roller: Every 50,000 counts

B. Procedure

1. Open the upper door.

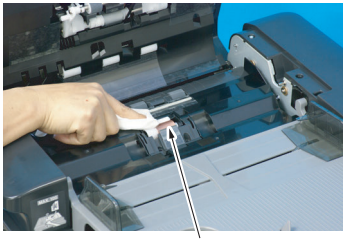

A143F2C002DA

2. Using a cleaning pad with alcohol, wipe the separation roller [1] clean of dirt.

2.1.3 Replacing the pick-up roller / feed roller

A. Periodically replaced parts/cycle

- Pick-up roller: Every 200,000 counts
- Feed roller: Every 200,000 counts

B. Procedure

1. Open the upper door.

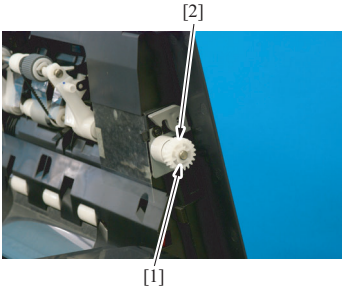

A143F2C003DA

2. Remove the C-ring [1] and the gear assy [2].

NOTE

- **When reinstalling the gear assy [2], push the gear assy [2] into position while rotating it.**

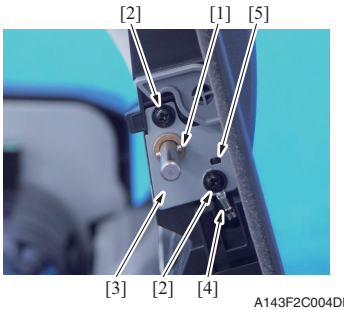

A143F2C004DB

3. Remove the pin [1].

NOTE

- **Be careful not to lose the pin [1].**

4. Remove two screws [2] and the ground terminal [4]. Then, remove the bearing assy [3].

NOTE

- **When reinstalling the bearing assy [3], make sure that the dowel pin fits into the dowel hole [5] in the bearing assy [3].**

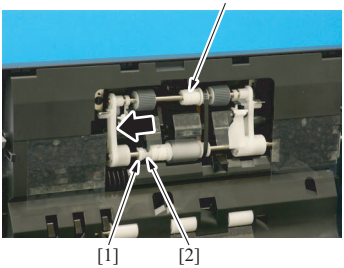

A143F2C005DA

5. Remove the C-clip [1] and slide the bushing [2] in the direction of the arrow.

6. Remove the pick-up roller/feed roller assy [3].

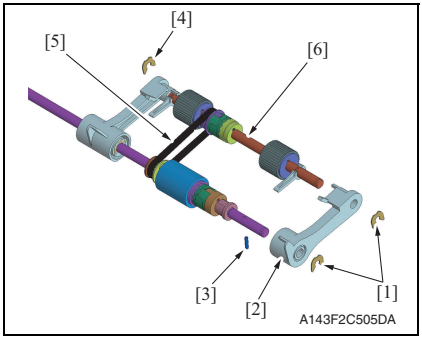

7. Remove two C-rings [1].
8. Remove the arm [2] and the pin [3].

NOTE

- **Be careful not to lose the pin [3].**

9. Remove the C-ring [4] and the belt [5], and remove the pick-up roller assy [6].

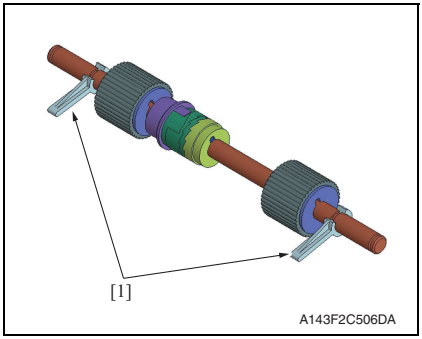

10. Remove two levers [1].

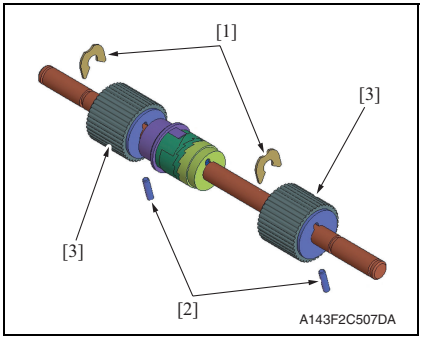

11. Remove two C-rings [1] and two pins [2], and remove two pick-up rollers [3].

NOTE

- **Be careful not to lose the pin [2].**

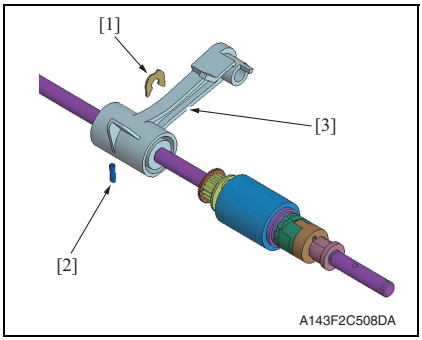

12. Remove the C-ring [1] and the pin [2], and remove the arm [3].

NOTE

- **Be careful not to lose the pin [2].**

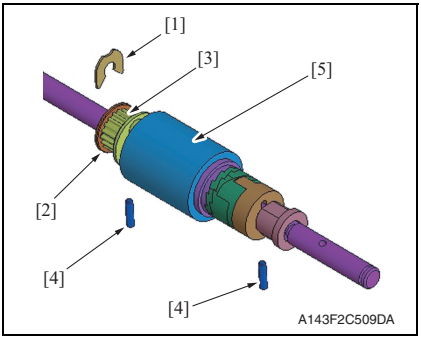

13. Remove the C-ring [1], the pulley [2] and the gear [3].
14. Remove two pins [4], and remove the feed roller [5].

NOTE

- **Be careful not to lose the pin [4].**

2.1.4 Replacing the separation roller

A. Periodically replaced parts/cycle

- Separation roller assy: Every 200,000 counts

B. Procedure

1. Open the upper door.

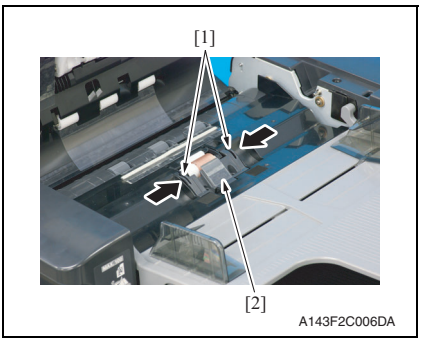

2. Pinch the portion [1] and remove the cover [2].

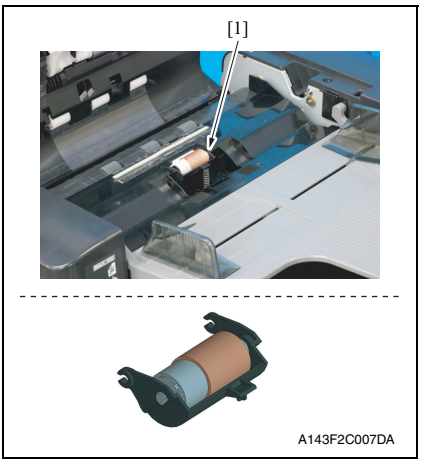

3. Remove the separation roller assy [1].

NOTE

- **Use care not to lose the spring on the underside of the separation roller assy.**

2.2 Transport section

2.2.1 Cleaning of the miscellaneous rolls

A. Periodically cleaning parts/cycle

- Miscellaneous rolls: Every 50,000 counts

B. Procedure

1. Lift up the document feed tray.

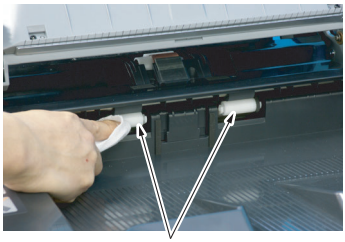

A143F2C008DA

2. Using a cleaning pad dampened with alcohol, wipe the rolls [1] clean of dirt.

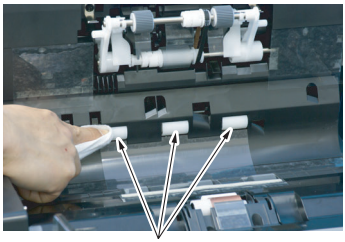

A143F2C009DA

3. Open the upper door.

4. Using a cleaning pad dampened with alcohol, wipe the rolls [1] clean of dirt.

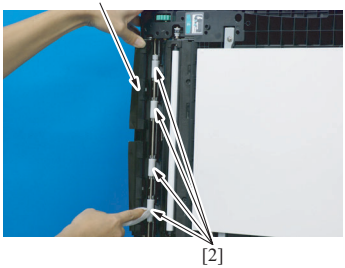

A143F2C010DA

5. Open the reverse automatic document feeder.

6. While opening the before scanning film assy [1], wipe the rolls [2] using a cleaning pad dampened with alcohol.

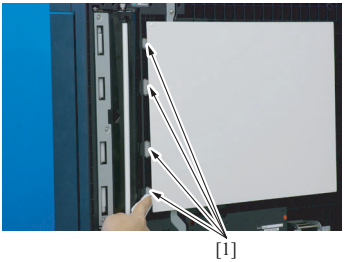

A143F2C011DA

7. Using a cleaning pad dampened with alcohol, wipe the rolls [1] clean of dirt.

2.2.2 Cleaning of the miscellaneous rollers

A. Periodically cleaning parts/cycle

- Miscellaneous rollers: Every 50,000 counts

B. Procedure

1. Open the upper door.

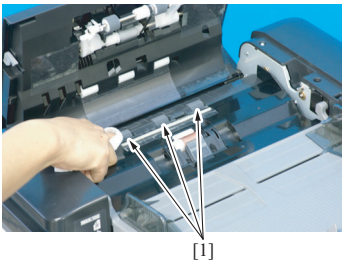

A143F2C012DA

2. Using a cleaning pad dampened with alcohol, wipe the rollers [1] clean of dirt.

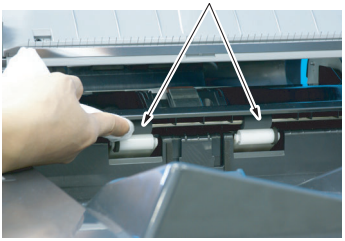

A143F2C013DA

3. Lift up the document feed tray.
4. Using a cleaning pad dampened with alcohol, wipe the rollers [1] clean of dirt.

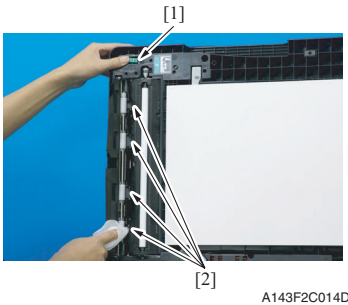

5. While turning processing knob [1], wipe the rollers [2] using a cleaning pad dampened with alcohol.

2.3 Scanning section

2.3.1 Cleaning of the cleaning shaft

A. Periodically cleaning parts/cycle

- Cleaning shaft: Every 50,000 counts

B. Procedure

1. Open the reverse automatic document feeder.

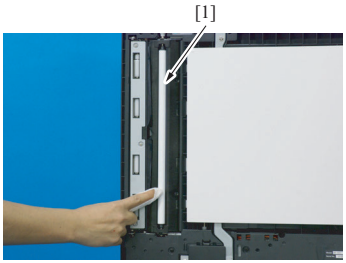

2. Using a cleaning pad dampened with alcohol, wipe the cleaning shaft [1] clean of dirt.

2.3.2 Cleaning of the reflective sensor section

A. Periodically cleaning parts/cycle

- Reflective sensor section: Every 50,000 counts

B. Procedure

1. Open the reverse automatic document feeder.

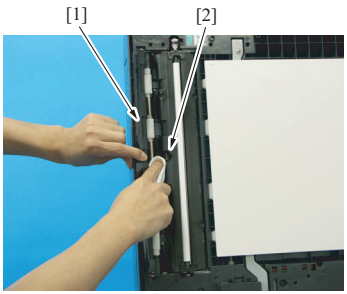

A143F2C513AA

2. While opening the before scanning film assy [1], wipe the reflective sensor [2] using a cleaning pad dampened with alcohol.

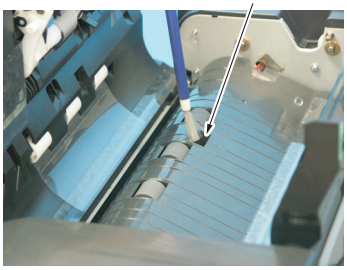

A143F2C514AA

3. Open the upper door.

4. Clean the cloth [1] using a brush or other similar tools.

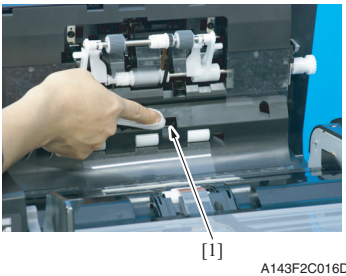

A143F2C016DA

5. Using a cleaning pad dampened with alcohol, wipe the reflective sensor [1] clean of dirt.

3. OTHER MAINTENANCE ITEM

3.1 Items not allowed to be disassembled and adjusted

A. Paint-locked screws

NOTE

- **To prevent loose screws, a screw lock in blue or green series color is applied to the screws.**
- **The screw lock is applied to the screws that may get loose due to the vibrations and loads created by the use of machine or due to the vibrations created during transportation.**
- **If the screw lock coated screws are loosened or removed, be sure to apply a screw lock after the screws are tightened.**

B. Red-painted screws

NOTE

- **The screws which are difficult to be adjusted in the field are painted in red in order to prevent them from being removed by mistake.**
- **Do not remove or loosen any of the red-painted screws in the field. It should also be noted that, when two or more screws are used for a single part, only one representative screw may be marked with the red paint.**

C. Variable resistors on board

NOTE

- **Do not turn the variable resistors on boards for which no adjusting instructions are given in Adjustment/Setting.**

D. Removal of PWBs

⚠ CAUTION

- **When removing a circuit board or other electrical component, refer to “Handling of PWBs” and follow the corresponding removal procedures.**
- **The removal procedures given in the following omit the removal of connectors and screws securing the circuit board support or circuit board.**
- **Where it is absolutely necessary to touch the ICs and other electrical components on the board, be sure to ground your body.**

3.2 Disassembly/reassembly parts list

Section	Part name	Ref. page
Exterior parts	Front cover	P.14
	Rear cover	P.15
	Upper door cover	P.15
	Document feed tray rear cover	P.16
Units	Reverse automatic document feeder	P.17
	Glass cleaning brush	P.19
Board and etc.	DF control board (DFCB)	P.19
	Document CD size sensor (VR1)	P.20
Others	Document reading motor (M1)	P.20
	Document feed motor (M2)	P.21
	Reading roller release motor (M3)	P.21
	Glass cleaning motor (M4)	P.22
	DF cooling fan motor (FM1)	P.23
	Document feed clutch (CL1)	P.23
	Document registration clutch (CL2)	P.24
	Document exit roller release solenoid (SD1)	P.25
	Stamp unit	P.26

3.3 Disassembly/reassembly procedure

3.3.1 Front cover

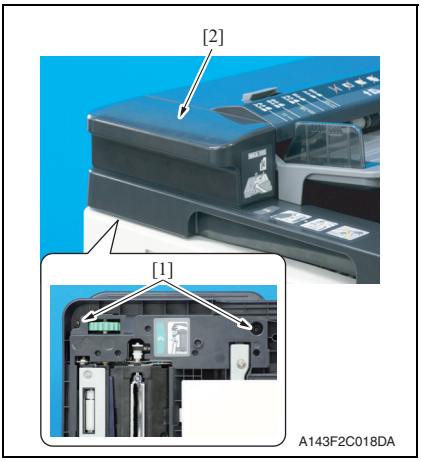

1. Open the reverse automatic document feeder.
2. Remove two screws [1], remove the front cover [2].

3.3.2 Rear cover

1. Open the reverse automatic document feeder.

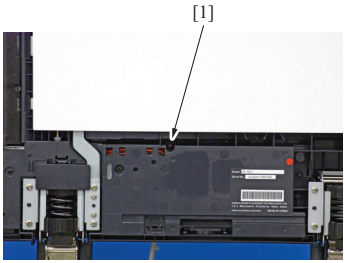

A143F2C019DA

2. Remove the screw [1].

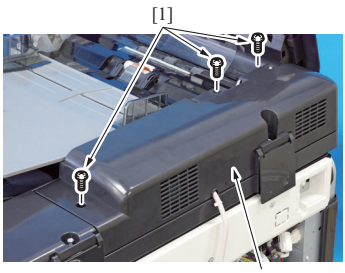

A143F2C020DA

3. Open the upper door.
4. Remove three screws [1], and remove the rear cover [2].

3.3.3 Upper door cover

1. Remove the front cover.
See P.14
2. Remove the rear cover.
See P.15

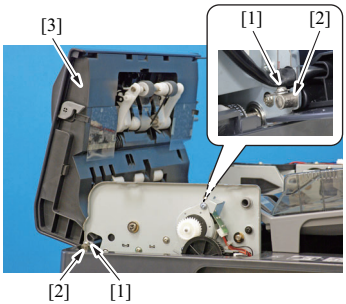

A143F2C021DA

3. Remove two screws [1], and remove two shafts [2].
4. Remove the upper door unit [3].

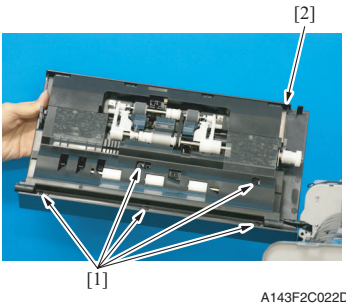

5. Remove five screws [1], and remove the upper door cover [2].

3.3.4 Document feed tray rear cover

1. Open the upper door.
2. Remove the rear cover.
   See P.15
3. Lift up the document feed tray.

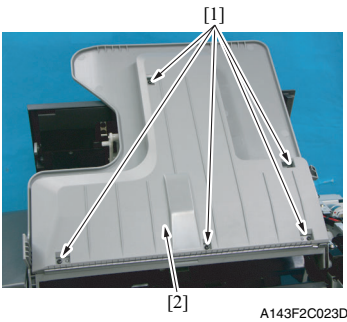

4. Remove five screws [1], and remove the document feed tray rear cover [2].

5. Reinstall the above parts following the removal steps in reverse.

3.3.5 Reverse automatic document feeder

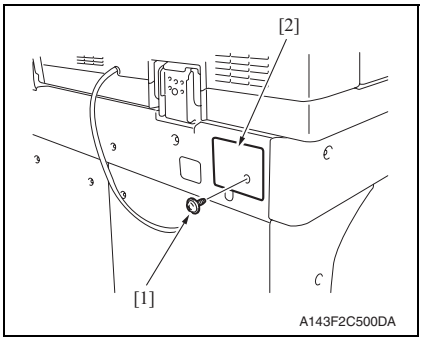

1. Remove the screw [1], and remove the cover [2].

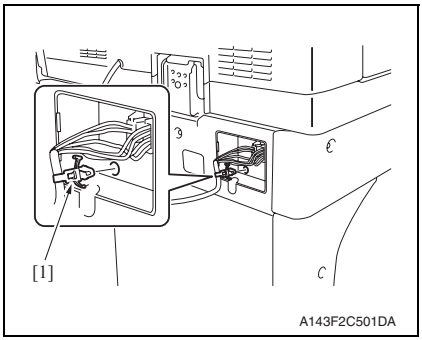

2. Remove the cable tie [1].

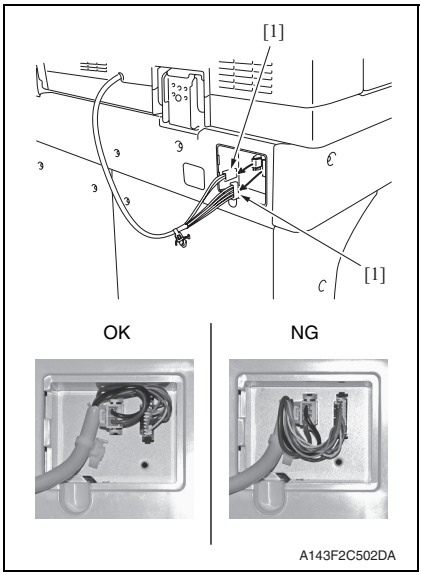

3. Disconnect two connectors [1].

NOTE

- **When connecting the connectors [1], be careful about routing of the harness.**

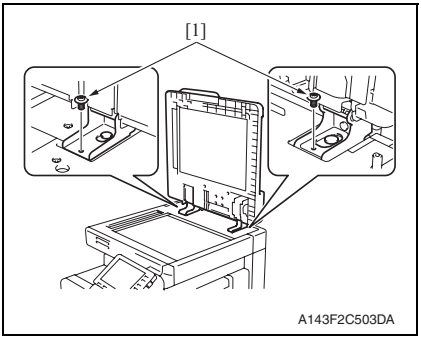

4. Open the reverse automatic document feeder.

NOTE

- **If the reverse automatic document feeder is set to be lifted up at angles up to 60 degrees due to the set position of the stopper for the hinge, change the set position to the lower side so that the reverse automatic document feeder can be opened completely.**

5. Remove two screws [1].

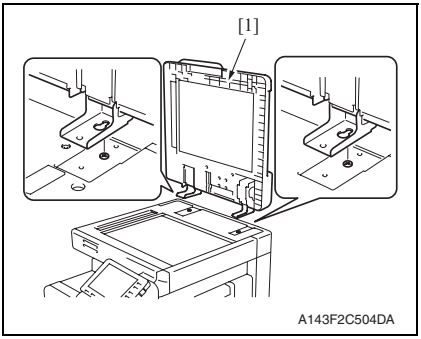

6. Remove the reverse automatic document feeder [1].

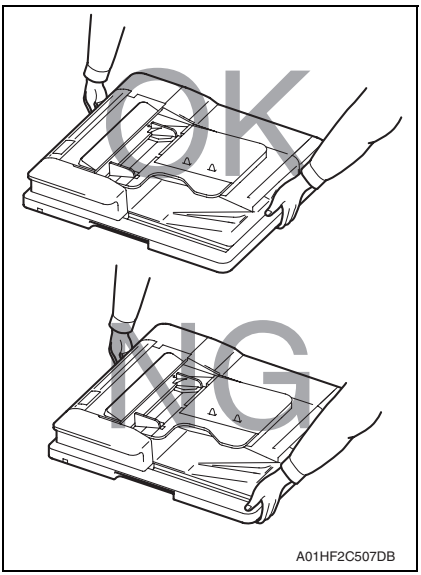

NOTE

- **When carrying the reverse automatic document feeder, be sure to hold onto the specified positions. The feeder main body can be distorted if held at inappropriate positions.**

7. Reinstall the above parts following the removal steps in reverse.

3.3.6 Glass cleaning brush

1. Open the reverse automatic document feeder.

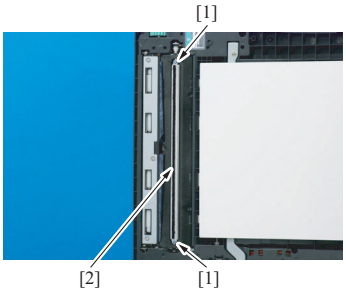

2. Remove two screws [1], and remove the glass cleaning brush [2].

3.3.7 DF control board (DFCB)

1. Remove the rear cover.
See P.15

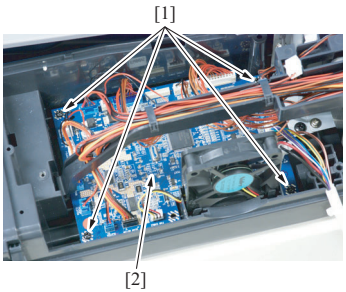

2. Disconnect all the connectors from the DF control board.
3. Remove four screws [1] and remove the DF control board [2].
4. Reinstall the above parts following the removal steps in reverse.

NOTE

- **Be sure to perform the following steps after the DF control board has been replaced with a new one.**

5. Execute [Service Mode] - [ADF] - [Original Tray Width].
See P.488 of the main body service manual.
6. Execute [Service Mode] - [ADF] - [Mixed Original Size Adjustment].
See P.492 of the main body service manual.

3.3.8 Document CD size sensor (VR1)

1. Remove the document feed tray rear cover.
   See P.16

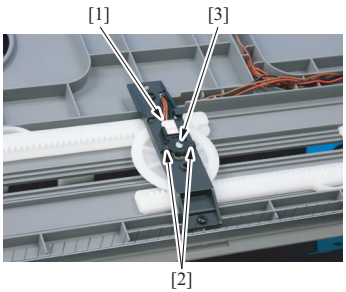

2. Disconnect the connector [1].
3. Remove two screws [2], and remove the document CD size sensor [3].

NOTE

- **Be sure to perform the following operation when the document CD size sensor is replaced.**

4. Execute [Service Mode] - [ADF] - [Original Tray Width].
   See P.488 of the main body service manual.
5. Turn OFF the main power switch and turn it ON again and check whether size detection operates normally.

3.3.9 Document reading motor (M1)

1. Remove the rear cover.
   See P.15

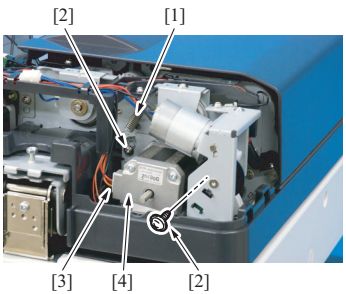

2. Remove the spring [1].
3. Remove two screws [2].
4. Disconnect the connector [3], and remove the document reading motor [4].
5. Reinstall the above parts following the removal steps in reverse.

3.3.10 Document feed motor (M2)

1. Remove the rear cover.
See P.15

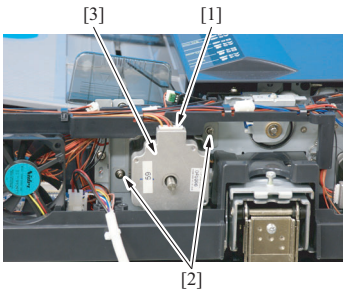

A143F2C028DA

2. Disconnect the connector [1].
3. Remove two screws [2], and remove the document feed motor [3].
4. Reinstall the above parts following the removal steps in reverse.

3.3.11 Reading roller release motor (M3)

1. Remove the rear cover.
See P.15

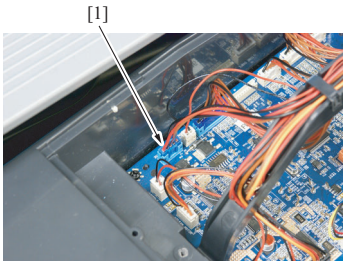

A143F2C029DA

2. Disconnect the connector (J15) [1] on the DF control board.

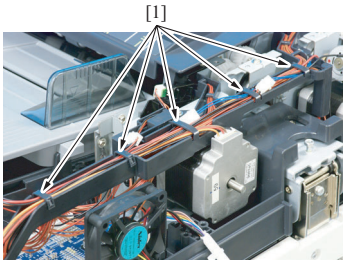

A143F2C030DA

3. Remove the harness form five wire saddles [1].

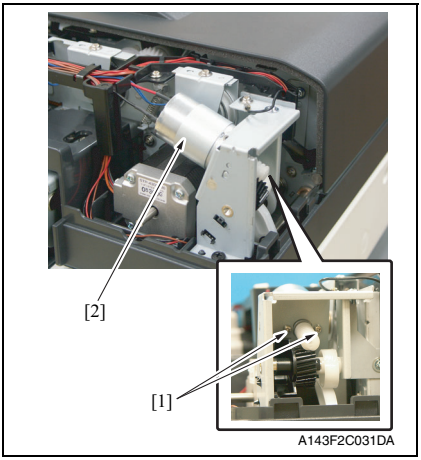

4. Remove two screws [1], and remove the reading roller release motor [2].

5. Reinstall the above parts following the removal steps in reverse.

3.3.12 Glass cleaning motor (M4)

1. Remove the front cover.
See P.14

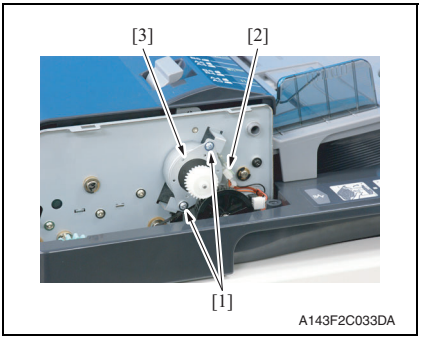

2. Remove two screws [1].
3. Disconnect the connector [2], and remove the glass cleaning motor [3].

4. Reinstall the above parts following the removal steps in reverse.

3.3.13 DF cooling fan motor (FM1)

1. Remove the rear cover.
See P.15

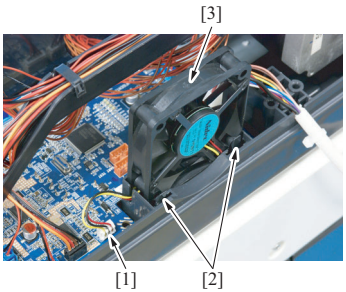

A143F2C034DA

2. Disconnect the connector (J13) [1] on the DF control board.
3. While unlocking two tabs [2], remove the DF cooling fan motor [3].

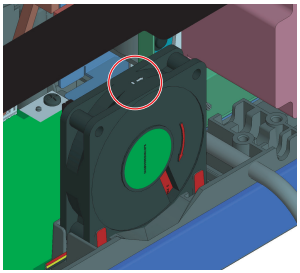
A143F2C510DA

NOTE

- **When reinstalling the DF cooling fan motor, make sure of its correct mounting direction.**

4. Reinstall the above parts following the removal steps in reverse.

3.3.14 Document feed clutch (CL1)

1. Remove the rear cover.
See P.15

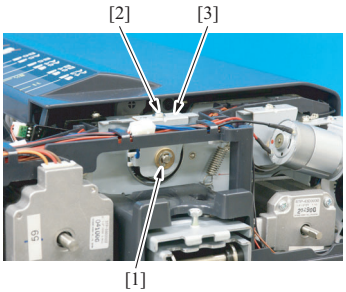

A143F2C035DA

2. Remove the E-ring [1].
3. Remove the screw [2], and remove the metal plate [3].

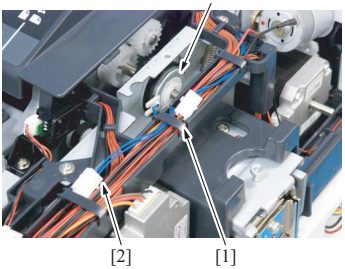

A143F2C036DA

4. Remove the harness form the wire saddle [1].
5. Disconnect the relay connector [2], and remove the document feed clutch [3].

6. Reinstall the above parts following the removal steps in reverse.

3.3.15 Document registration clutch (CL2)

1. Remove the rear cover.
See P.15
2. Remove the reading roller release motor assy.
See P.21

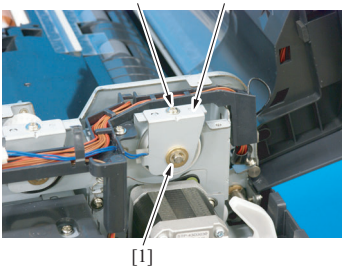

A143F2C037DA

3. Remove the E-ring [1].
4. Remove the screw [2], and remove the metal plate [3].

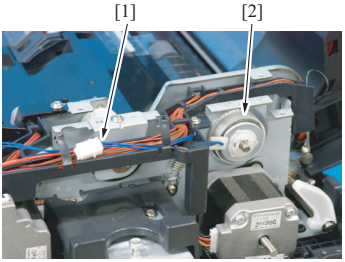

A143F2C038DA

5. Disconnect the relay connector [1], and remove the document registration clutch [2].

6. Reinstall the above parts following the removal steps in reverse.

3.3.16 Document exit roller release solenoid (SD1)

1. Remove the rear cover.
See P.15

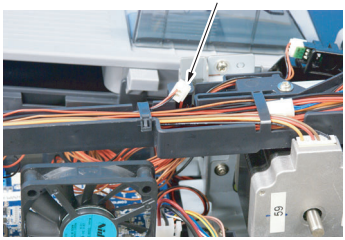

A143F2C039DA

2. Disconnect the relay connector [1].

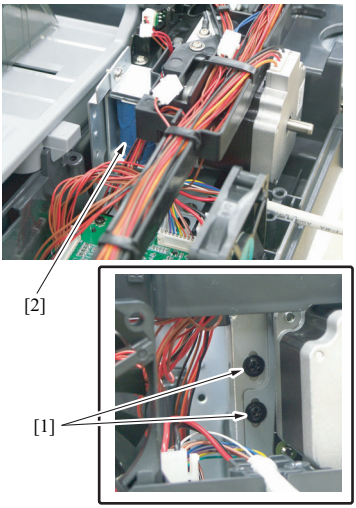

A143F2C040DA

3. Mark the positions of two screws [1] with a pen.
4. Remove two screws [1], and remove the document exit roller release solenoid [2].

NOTE

- **When reinstalling the solenoid, tighten the screws at the correct positions marked before they have been removed.**

5. Reinstall the above parts following the removal steps in reverse.

3.3.17 Stamp unit

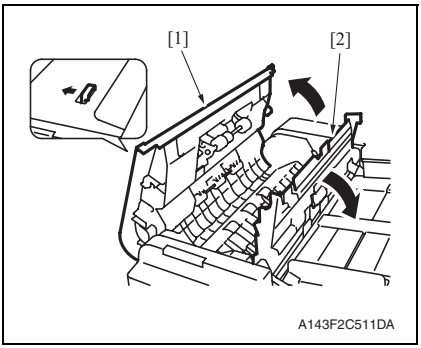

1. Open the upper door [1].
2. Open the processing guide [2].

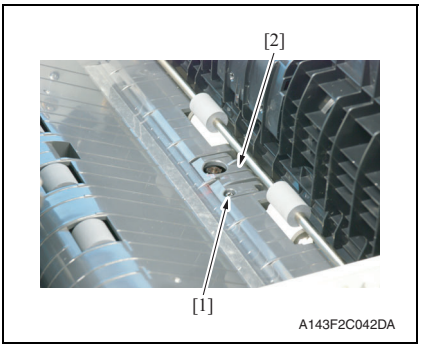

3. Remove the screw [1], and remove the guide plate [2].

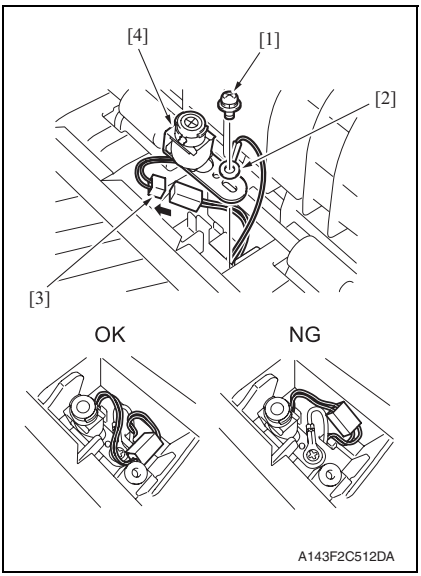

4. Remove the screw [1], and remove the ground terminal [2].
5. Disconnect the connector [3], remove the stamp unit [4].

NOTE

- **Place the harness as illustrated at reinstallation.**

4. SERVICE TOOL

4.1 CE tool list

Tool name	Shape	Personnel	Parts No.	Remarks
ADF reading chart	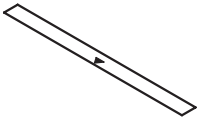 9J07F2C003DA	1	9J06 PJG1 XX	

Blank Page

ADJUSTMENT/SETTING

5. HOW TO USE THE ADJUSTMENT SECTION

- “Adjustment/Setting” contains detailed information on the adjustment items and procedures for this machine.
- Throughout this “Adjustment/Setting,” the default settings are indicated by “ ”.

Advance checks

Before attempting to solve the customer problem, the following advance checks must be made. Check to see if:

- The power supply voltage meets the specifications.
- The power supply is properly grounded.
- The machine shares the power supply with any other machine that draws large current intermittently (e.g., elevator and air conditioner that generate electric noise).
- The installation site is environmentally appropriate: high temperature, high humidity, direct sunlight, ventilation, etc.; levelness of the installation site.
- The original has a problem that may cause a defective image.
- The density is properly selected.
- The original glass, slit glass, or related part is dirty.
- Correct paper is being used for printing.
- The units, parts, and supplies used for printing (developer, PC drum, etc.) are properly replenished and replaced when they reach the end of their useful service life.
- Toner is not running out.

⚠ CAUTION

- **Be sure to unplug the power cord of the machine before starting the service job procedures.**
- **If it is unavoidably necessary to service the machine with its power turned ON, use utmost care not to be caught in the scanner cables or gears of the exposure unit.**
- **Special care should be used when handling the fusing unit which can be extremely hot.**
- **The developing unit has a strong magnetic field. Keep watches and measuring instruments away from it.**
- **Take care not to damage the PC drum with a tool or similar device.**
- **Do not touch IC pins with bare hands.**

6. MECHANICAL ADJUSTMENT

6.1 Mechanical adjustment of the original document feed section

6.1.1 Adjusting the height

Make this adjustment after any of the following procedures has been performed.

- **When the reverse automatic document feeder has been reinstalled.**

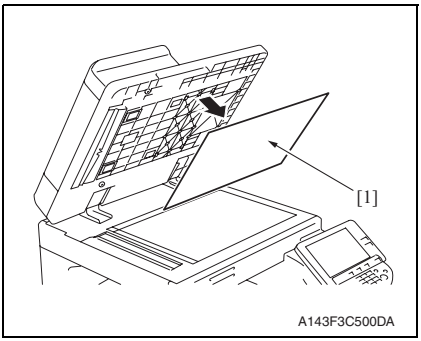

1. Remove the document pad [1].

NOTE

- **When removing the document pad [1], pull apart the hook and loop fastener one by one. Pulling the mall at once may damage the sponge.**

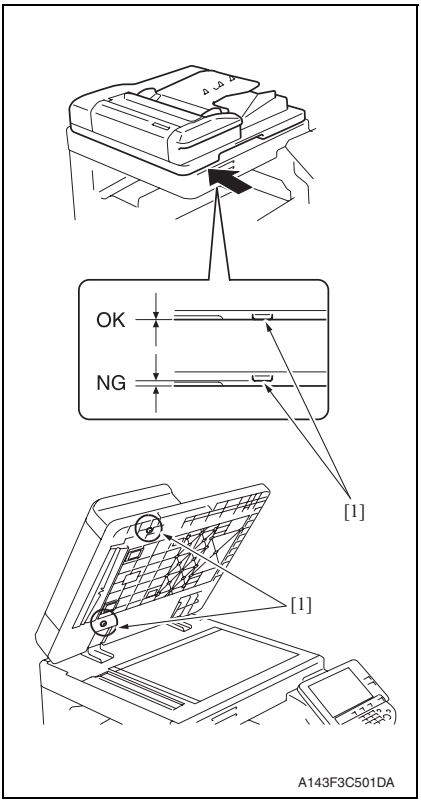

2. Check the clearance between the upper face [1] of scanner and the protrusion on the reverse automatic document feeder side. (2 spots, front/back)

NOTE

- **There must be no clearance between the protrusion on the reverse automatic document feeder and the upper face [1] of scanner.**

3. If there is any clearance, the following adjustment is needed.

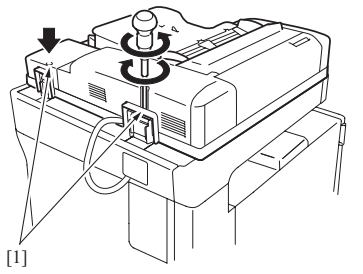

A143F3C502DA

4. Remove the clearance by turning the adjusting screw [1].
   Clockwise rotation: Lifting up the rear side
   Counterclockwise rotation: Lowering the rear side
5. Use the adjusting screw [1] when further adjustment is needed.
   Clockwise rotation: Lifting up the rear side
   Counterclockwise rotation: Lowering the rear side

6.1.2 Adjusting skew feed

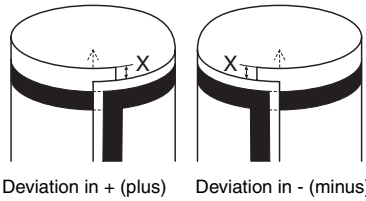

9J07F3C513DA

1. Check how the edges of the chart are misaligned.
   The amount of the deviation of the chart will be X.

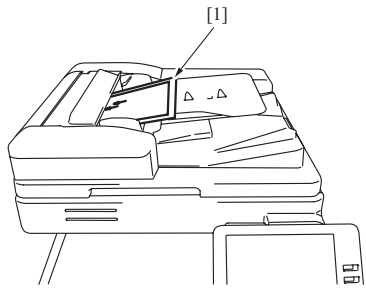

A0P0F3C607DA

2. Place the chart [1] in the document feed tray (with the side having an arrow facing up).

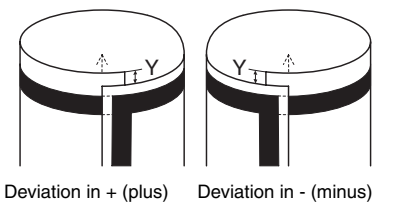

3. Make copies 5 times repeatedly in single side mode.
4. Fold all 5 sample copies as illustrated and check for any deviation. Deviation on the sample will be Y.
5. Obtain the difference between the deviation of the chart and the deviation of the sample.
   Difference of the deviation = Y - X
   Specifications: 0 ± 2 mm
6. If the difference of the deviation does not fall within the specified range, perform the following adjustment.

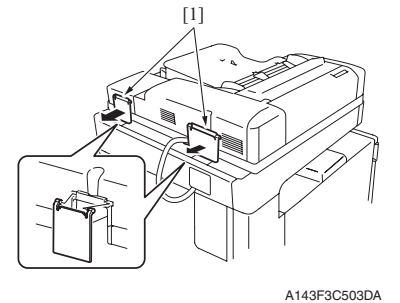

7. Remove two supplied hinge covers [1].

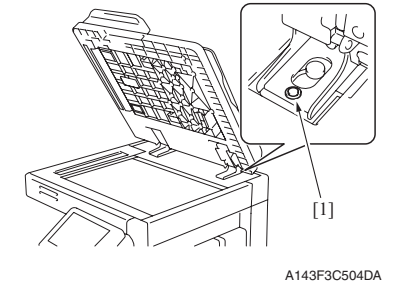

8. Loosen the mounting screw [1] on the right hinge viewed from the front.

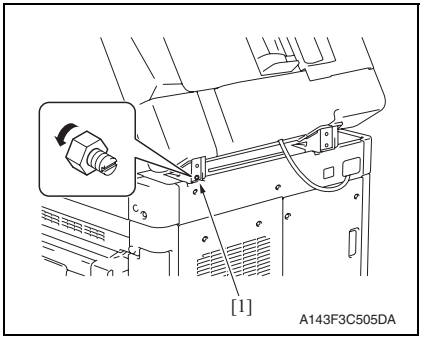

9. Loosen the nut [1].

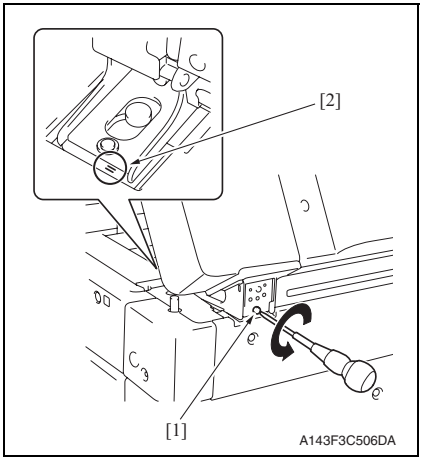

10. When the difference of the deviation is + (plus), turn the screw [1] counterclockwise to adjust.

NOTE

- **Look at the guide lines [2] when making the adjustment.**
- **When turning the screw, be sure not to raise the reverse automatic document feeder until in an upright position.**
- **To prevent the adjustment screw [2] breakage, be sure to follow the above instructions.**

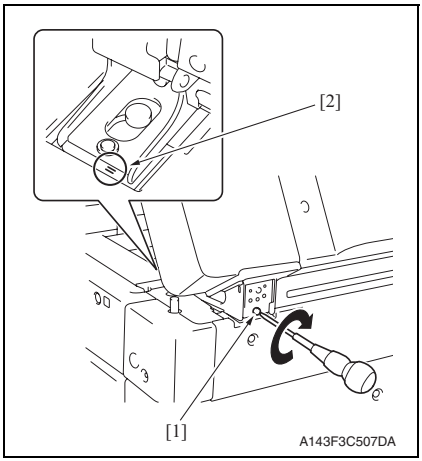

11. When the difference of the deviation is - (minus), turn the screw [1] clockwise to adjust.

NOTE

- **Look at the guide lines [2] when making the adjustment.**
- **When turning the screw, be sure not to raise the reverse automatic document feeder until in an upright position.**
- **To prevent the adjustment screw [2] breakage, be sure to follow the above instructions.**

12. After completing the adjustment, tighten the nut loosened in step 9.
13. After completing the adjustment, tighten the screw loosened in step 8.
14. Attach the two supplied hinge covers.

Blank Page

KONICA MINOLTA

SERVICE MANUAL

FIELD SERVICE

PC-109/PC-208

2012.02

KONICA MINOLTA BUSINESS TECHNOLOGIES, INC. Ver. 1.1

Revision history

After publication of this service manual, the parts and mechanism may be subject to change for improvement of their performance.
Therefore, the descriptions given in this service manual may not coincide with the actual machine.

When any change has been made to the descriptions in the service manual, a revised version will be issued with a revision mark added as required.

Revision mark:

- To indicate clearly a section revised, ⚠1 is shown at the left margin of the revised section.
  The number inside ⚠1 represents the number of times the revision has been made.

- To indicate clearly a page that contains the revision, ▲1 is shown near the page number of the corresponding page.
  The number inside ▲1 represents the number of times the revision has been made.

NOTE

Revision marks shown in a page are restricted only to the latest ones with the old ones deleted.

- When a page revised in Ver. 2.0 has been changed in Ver. 3.0:
  The revision marks for Ver. 3.0 only are shown with those for Ver. 2.0 deleted.
- When a page revised in Ver. 2.0 has not been changed in Ver. 3.0:
  The revision marks for Ver. 2.0 are left as they are.

Date	Service manual Ver.	Revision mark	Descriptions of revision
2012/02	1.1	⚠1	Error correction
2010/04	1.0	—	Issue of the first edition

CONTENTS

PC-109/PC-208

OUTLINE

1. PRODUCT SPECIFICATIONS 1

MAINTENANCE

2. PERIODICAL MAINTENANCE PROCEDURE 3
2.1 Paper feed section 3
2.1.1 Replacing the separation roller 3
2.1.2 Replacing the feed roller 6
2.1.3 Replacing the pick-up roller 9
3. OTHER MAINTENANCE ITEM 11
3.1 Items not allowed to be disassembled and adjusted 11
3.2 Disassembly/reassembly parts list 12
3.3 Cleaning parts list 12
3.4 Disassembly/reassembly procedure 12
3.4.1 Right door 12
3.4.2 Rear right cover/Lower right cover/Front right cover 13
3.4.3 Rear cover/Left cover 13
3.4.4 Paper feed cabinet 14
3.4.5 PC Control board (PCCB31) 16
3.4.6 Tray 3 LED board (LEDB31)/Tray 4 LED board (LEDB41) 16
3.4.7 Tray 3 lift-up motor (M33) / Tray 4 lift-up motor (M43) 17
3.4.8 Tray 3 paper feed motor (M31) / Tray 3 vertical transport motor (M32)
Tray 4 paper feed motor (M41) / Tray 4 vertical transport motor (M42) 17
3.5 Cleaning point 19
3.5.1 Separation roller 19
3.5.2 Feed roller 20
3.5.3 Pick-up roller 20
3.5.4 Vertical transport roller 21

ADJUSTMENT/SETTING

4. How to use the adjustment section 23
5. MECHANICAL ADJUSTMENT 24
5.1 Adjusting the paper reference position 24

Blank Page

OUTLINE

1. PRODUCT SPECIFICATIONS

A. Type

Name	1 way paper feed cabinet / 2 way paper feed cabinet
Type	Front loading type 1 way paper feed device / 2 way paper feed device
Installation	Desk type
Document alignment	Center

B. Paper

Type	Size	Capacity	
		Tray 3	Tray 4
Plain paper (60 to 90 g/m², 16 to 24 lb)	A5S (Metric area only), B5, B5S, A4, A4S, B4, A3, 5-1/2 x 8-1/2S (Inch area only), 8-1/2 x 11, 8-1/2 x 11S, 8-1/2 x 14, 11 x 17 8K, 16K	500 sheets	500 sheets
Copy paper dimensions	Width	139.7 to 297 mm 5.5 to 11.7 inch	
	Length	182 to 431.8 mm 7.2 to 17 inch	

C. Machine specifications

Power requirements	DC 24 V ± 10 % (supplied from the main body)
	DC 5 V ± 5 %
Max. power consumption	15 W or less
Dimensions	600 mm (W) x 603 mm (D) x 325 mm (H) 23.62 inch (W) x 23.74 inch (D) x 12.79 inch (H)
Weight	PC-109: 29.0 kg (63.93 lb) PC-208: 34.0 kg (74.95 lb)

D. Operating environment

Conforms to the operating environment of the main body.

NOTE

- **These specifications are subject to change without notice.**

Blank Page

MAINTENANCE

2. PERIODICAL MAINTENANCE PROCEDURE

2.1 Paper feed section

2.1.1 Replacing the separation roller

A. Periodically replaced parts/cycle

- Separation roller: Every 300,000 feed

NOTE

- **Replace the separation roller, feed roller and pick-up roller at the same time.**

B. Procedure

1. Remove the right door.
See P.12

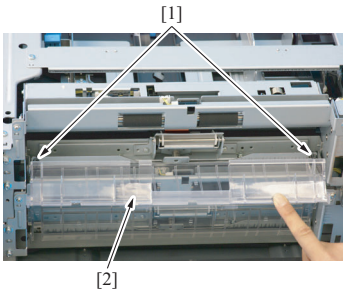

A1V4F2C015DA

2. Remove two springs [1].
3. Remove the jam clearing cover [2].

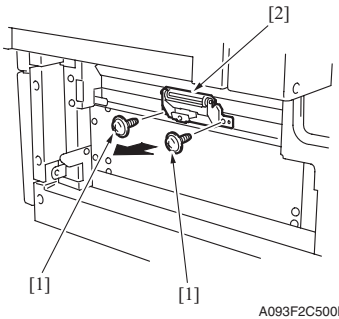

A093F2C500DA

4. Remove two screws [1] and remove the paper separation roller mounting bracket assy [2].

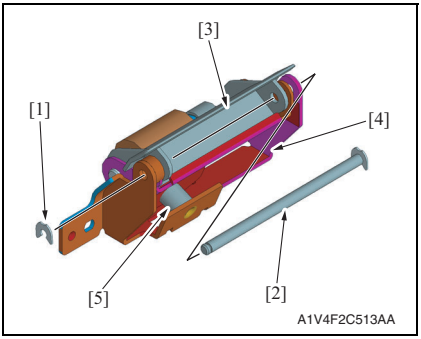

5. Remove the C-ring [1], and remove the shaft [2].
6. Remove the guide [3] and bracket [4].

NOTE

- **Be careful not to lose spring [5] at this time.**

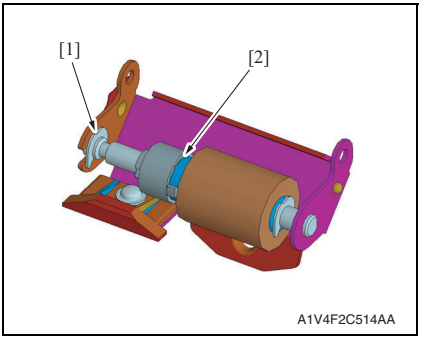

7. Remove the C-ring [1], and remove the separation roller assy [2].

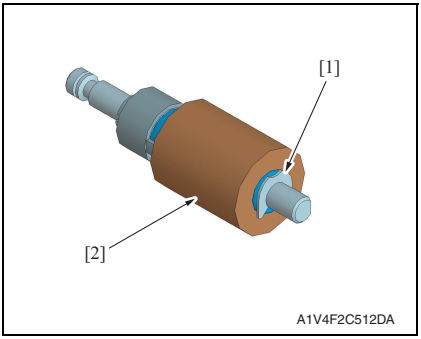

8. Remove the C-ring [1], and remove the separation roller [2].

9. Repeat steps 1 to 8 similarly for the 4th drawer.

NOTE

- **Install the separation roller assy while pressing the holder down so that it aligns to the metal bracket of the machine.**
- **Make sure that the separation roller assy is not tilted to the right or left when installed.**

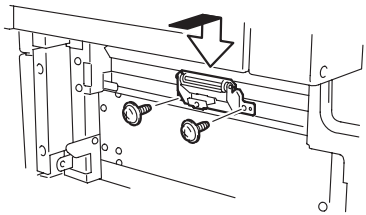

A093F2C503DA

2.1.2 Replacing the feed roller

A. Periodically replaced parts/cycle

- Feed roller: Every 300,000 feed

NOTE

- **Replace the separation roller, feed roller and pick-up roller at the same time.**

B. Procedure

1. Remove the rear right cover. (Remove the right lower cover for 4th row.)
   See P.13
2. Remove the tray 3. (Remove the tray 4 from 4th row.)
3. Remove the paper separation roller mounting bracket assy.
   See the procedures 1 to 4 in P.3 “Separation roller.”

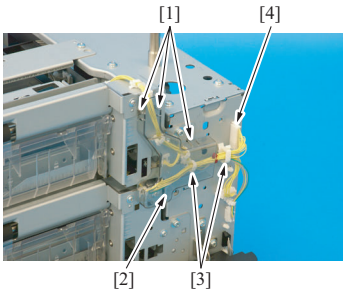

A1V4F2C016DA

4. Unlock three tabs [1], and remove the harness cover [2].
5. Remove the harness from two wire saddles [3].
6. Disconnect the connector [4].

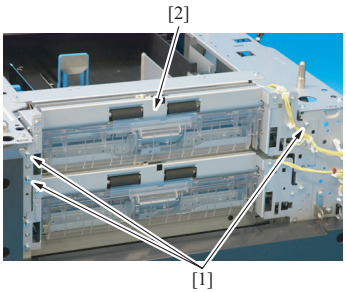

A1V4F2C017DA

7. Remove three screws [1] and remove the feed unit [2].

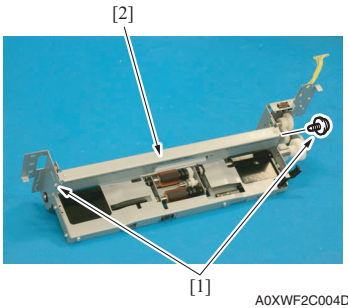

A0XWF2C004DA

8. Remove two screws [1] and remove the mounting frame [2] for the paper separation roller mounting bracket assy.

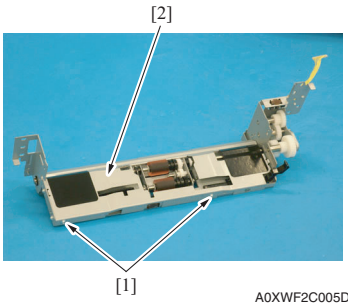

9. Remove two screws [1] and remove the feed roller cover [2].

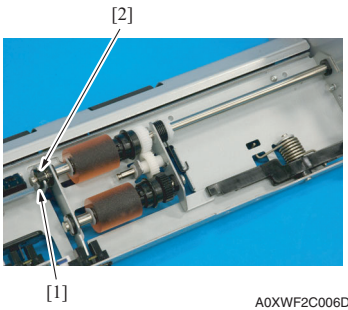

10. Remove the C-ring [1] and remove the bushing [2].

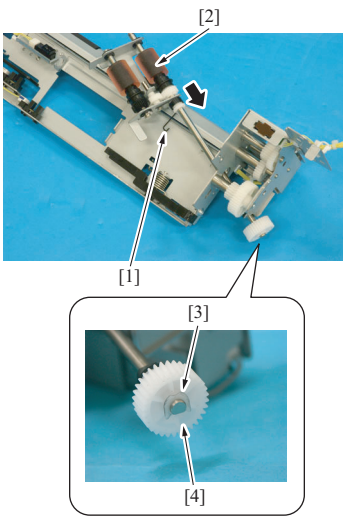

11. Detach the hook [1] of the spring and shift the shaft assy [2] in the direction shown in the illustration.

12. Remove the C-ring [3] and the gear [4].

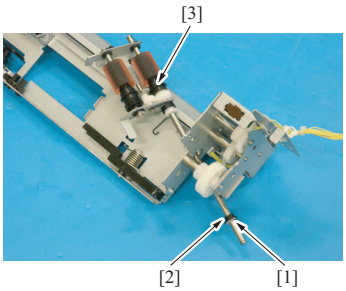

A0XWF2C008DA

13. Remove the C-ring [1] and the bushing [2], and remove the shaft assy [3].

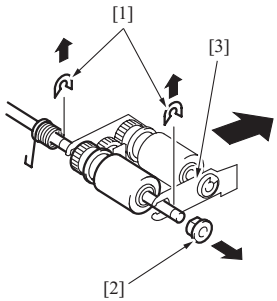

A093F2C530DA

14. Remove two C-rings [1] and the bushing [2], and remove the pick-up roller fixing bracket assy [3].

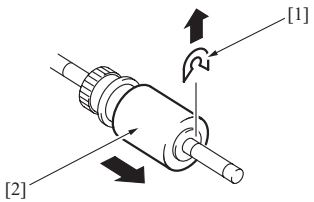

A093F2C531DA

15. Remove the C-ring [1] and remove the feed roller [2].

16. Repeat steps 1 to 15 similarly for the 4th drawer.

2.1.3 Replacing the pick-up roller

A. Periodically replaced parts/cycle

- Pick-up roller: Every 300,000 feed

NOTE

- **Replace the separation roller, feed roller and pick-up roller at the same time.**

B. Procedure

1. Remove the rear right cover. (Remove the right lower cover for 4th row.)
   See P.13
2. Remove the tray 3. (Remove the tray 4 from 4th row.)
3. Remove the separation roller mounting bracket assy.
   See the procedures 1 to 4 in P.3 “Separation roller.”

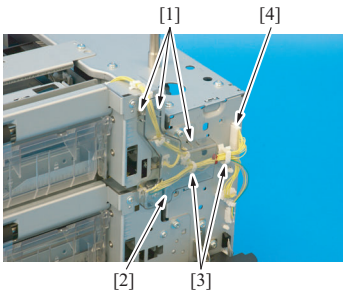

A1V4F2C016DA

4. Unlock three tabs [1], and remove the harness cover [2].
5. Remove the harness from two wire saddles [3].
6. Disconnect the connector [4].

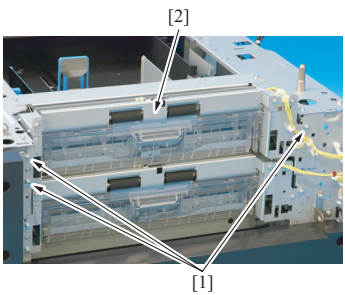

A1V4F2C017DA

7. Remove three screws [1] and remove the feed unit [2].

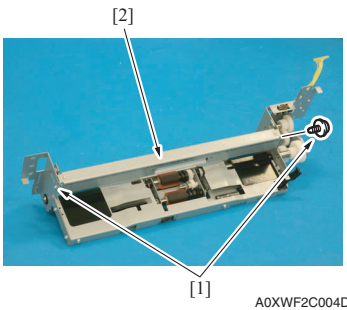

A0XWF2C004DA

8. Remove two screws [1] and remove the mounting frame [2] for the paper separation roller mounting bracket assy.

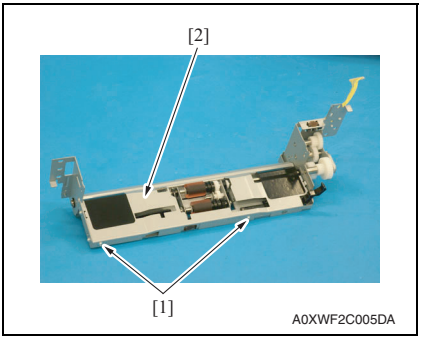

9. Remove two screws [1] and remove the feed roller cover [2].

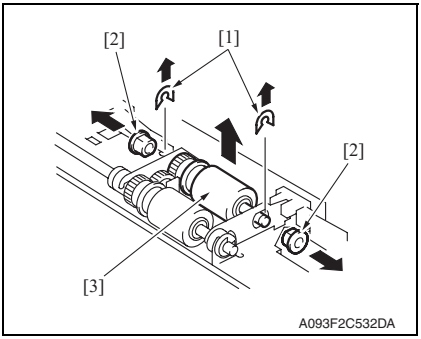

10. Remove two C-rings [1] and two bushings [2], and remove the pick-up roller assy [3].

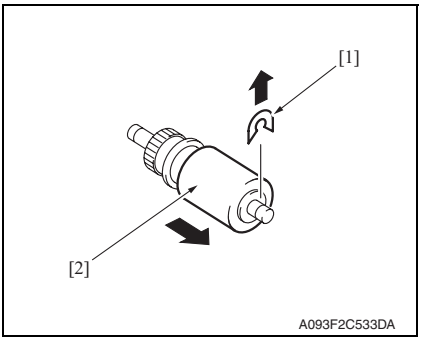

11. Remove the C-ring [1] and remove the pick-up roller [2].

12. Repeat steps 1 to 11 similarly for the 4th drawer.

3. OTHER MAINTENANCE ITEM

3.1 Items not allowed to be disassembled and adjusted

A. Paint-locked screws

NOTE

- **To prevent loose screws, a screw lock in blue or green series color is applied to the screws.**
- **The screw lock is applied to the screws that may get loose due to the vibrations and loads created by the use of machine or due to the vibrations created during transportation.**
- **If the screw lock coated screws are loosened or removed, be sure to apply a screw lock after the screws are tightened.**

B. Red-painted screws

NOTE

- **The screws which are difficult to be adjusted in the field are painted in red in order to prevent them from being removed by mistake.**
- **Do not remove or loosen any of the red-painted screws in the field. It should also be noted that, when two or more screws are used for a single part, only one representative screw may be marked with the red paint.**

C. Variable resistors on board

NOTE

- **Do not turn the variable resistors on boards for which no adjusting instructions are given in Adjustment/Setting.**

D. Removal of PWBs

⚠ CAUTION

- **When removing a circuit board or other electrical component, refer to “Handling of PWBs” and follow the corresponding removal procedures.**
- **The removal procedures given in the following omit the removal of connectors and screws securing the circuit board support or circuit board.**
- **Where it is absolutely necessary to touch the ICs and other electrical components on the board, be sure to ground your body.**

3.2 Disassembly/reassembly parts list

Section	Part name	Ref. page
Exterior parts	Right door	P.12
	Rear right cover	P.13
	Lower right cover	P.13
	Front right cover	P.13
	Rear cover	P.13
	Left cover	P.13
Boards	PC control board (PCCB31)	P.16
	Tray 3 LED board (LEDB31)	P.16
	Tray 4 LED board (LEDB41)	
Others	Tray 3 vertical transport motor (M32)	P.17
	Tray 3 paper feed motor (M31)	
	Tray 4 vertical transport motor (M42)	
	Tray 4 paper feed motor (M41)	
	Tray 3 lift-up motor (M33)	P.17
	Tray 4 lift-up motor (M43)	

3.3 Cleaning parts list

Section	Part name	Ref. page
Feed section	Separation roller	P.19
	Feed roller	P.20
	Pick-up roller	P.20
Transport section	Vertical transport roller	P.21

3.4 Disassembly/reassembly procedure

3.4.1 Right door

1. Open the right door.

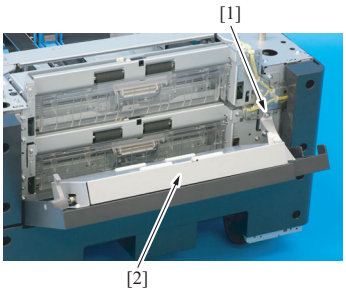

A1V4F2C018DA

2. Remove the screw [1].
3. Remove the right door [2].

3.4.2 Rear right cover/Lower right cover/Front right cover

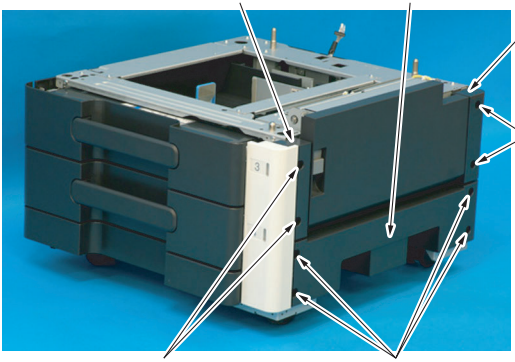

A1V4F2C019DA

1. Remove two screws [1] and remove the rear right cover [2].
2. Remove four screws [3] and remove the lower right cover [4].
3. Remove two screws [5] and remove the front right cover [6].

3.4.3 Rear cover/Left cover

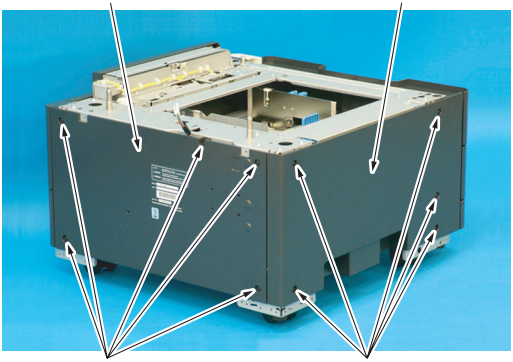

A1V4F2C020DA

1. Remove five screws [1] and remove the rear cover [2].
2. Remove five screws [3] and remove the left cover [4].

3.4.4 Paper feed cabinet

1. Slide out the tray 2 and tray 3.

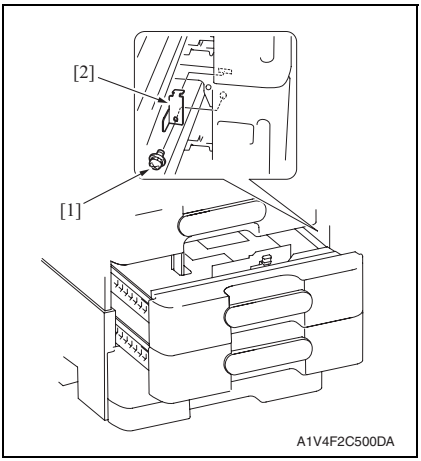

2. Remove the screw [1], and remove the fixing bracket [2].

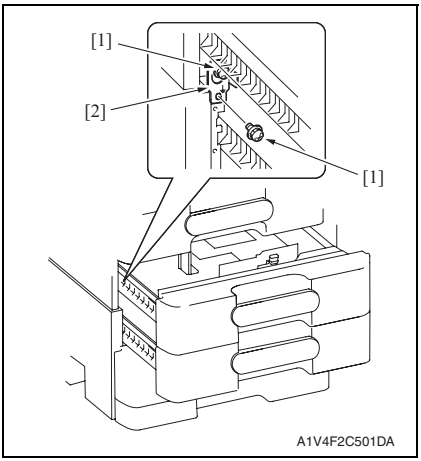

3. Remove two screws [1], and remove the fixing bracket [2].

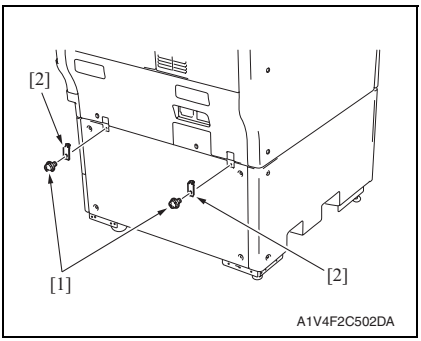

4. Remove two screws [1], and remove two fixing brackets [2].

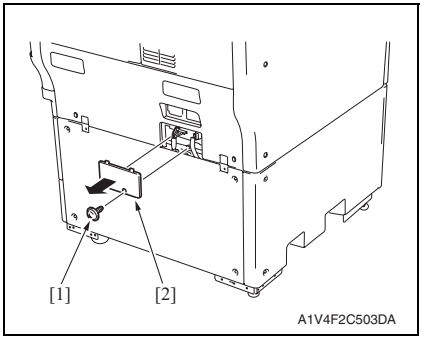

5. Remove the screw [1], and remove the cover [2].

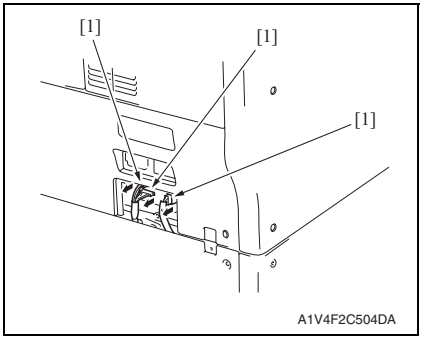

6. Disconnect three connectors [1].

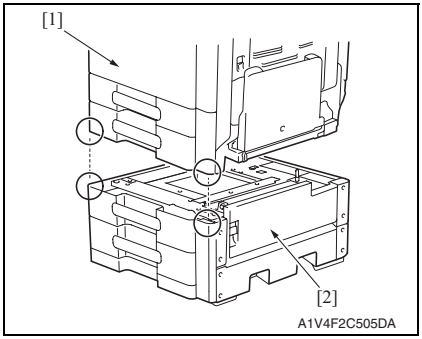

7. Lift the main body [1] and then remove the paper feed cabinet [2].

3.4.5 PC Control board (PCCB31)

1. Remove the rear cover.
See P.13

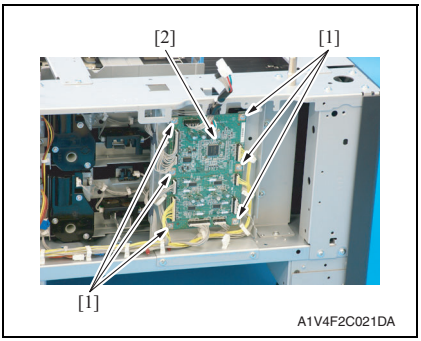

2. Disconnect all connectors of the PC control board.
3. Remove six screws [1], and remove the PC control board [2].
4. Reinstall the above parts following the removal steps in reverse.

3.4.6 Tray 3 LED board (LEDB31)/Tray 4 LED board (LEDB41)

1. Slide out the tray 3 and tray 4.

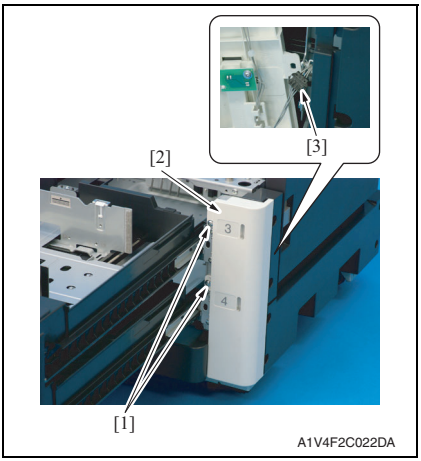

2. Remove two screws [1], and remove the cover [2].
3. Disconnect the connector [3].

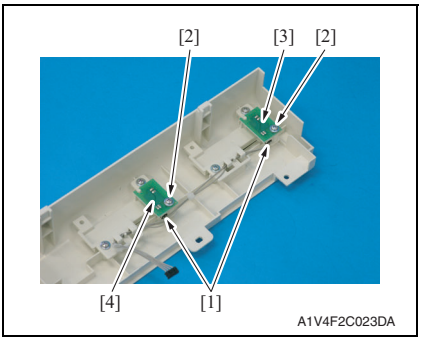

4. Remove the screw [1] each, disconnect the connector [2] each, and remove the tray 3 LED board [3] and the tray 4 LED board [4].

3.4.7 Tray 3 lift-up motor (M33) / Tray 4 lift-up motor (M43)

1. Remove the rear cover.
See P.13

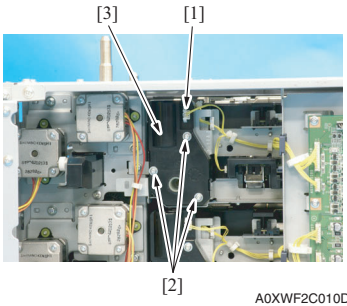

A0XWF2C010DA

2. Disconnect the connector [1].
3. Remove three screws [2], and remove the tray 3 lift-up motor [3].

4. Follow the same procedure as the above to remove the tray 4 lift-up motor.
5. Reinstall the above parts following the removal steps in reverse.

3.4.8 Tray 3 paper feed motor (M31) / Tray 3 vertical transport motor (M32) Tray 4 paper feed motor (M41) / Tray 4 vertical transport motor (M42)

1. Remove the rear cover.
See P.13

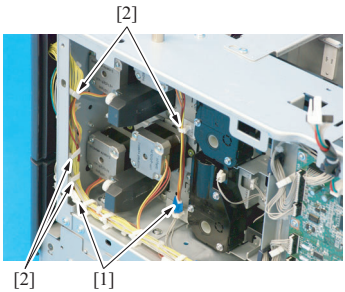

A1V4F2C024DA

2. Disconnect two connectors [1].
3. Remove the harness from four wire saddles [2].

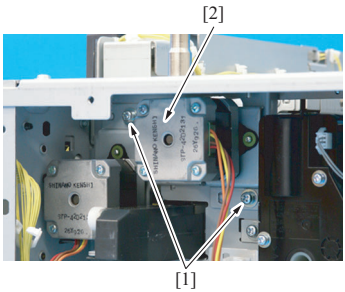

A1V4F2C025DA

4. Remove two screws [1], and remove the motor assy [2].

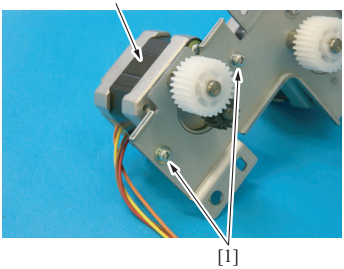

A1V4F2C026DA

5. Remove two screws [1], and remove the tray 3 paper feed motor [2].

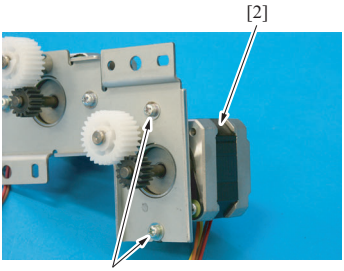

A1V4F2C027DA

6. Remove the C-ring [1] and the gear [2].
7. Remove two screws [3], and remove the tray 3 vertical transport motor [4].

8. Follow the same procedure as the above to remove the tray 4 paper feed motor/tray 4 vertical transport motor.
9. Reinstall the above parts following the removal steps in reverse.

3.5 Cleaning point

NOTE

- **The alcohol described in the cleaning procedure of maintenance represents the isopropyl alcohol.**

3.5.1 Separation roller

1. Remove the right door.
   See P.12

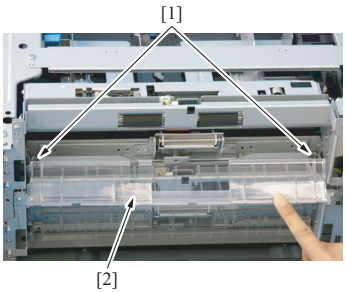

2. Remove two springs [1].
3. Remove the jam clearing cover [2].

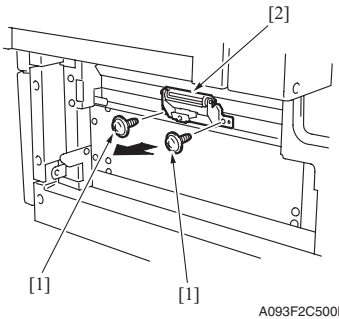

4. Remove two screws [1] and remove the separation roller mounting bracket assy [2].

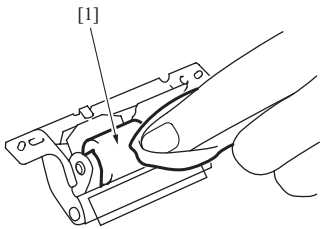

5. Using a cleaning pad dampened with alcohol, wipe the separation roller [1] clean of dirt.

6. Repeat steps 1 to 5 similarly for the 4th drawer.

3.5.2 Feed roller

1. Remove the tray 3. (remove the tray 4 from 4th row.)
2. Remove the separation roller mounting bracket assy.
   See the procedures 1 to 4 in P.19 “Cleaning of the separation roller.”

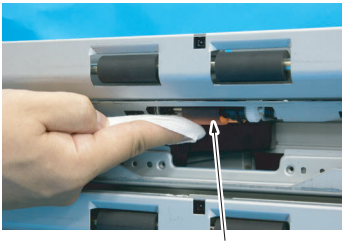

A0XWF2C015DA

3. Using a cleaning pad dampened with alcohol, wipe the feed roller [1] clean of dirt.
4. Repeat steps 1 to 3 similarly for the 4th drawer.

3.5.3 Pick-up roller

1. Remove the tray 3. (remove the tray 4 from 4th row.)
2. Remove the separation roller mounting bracket assy.
   See the procedures 1 to 4 in P.19 “Cleaning of the separation roller.”

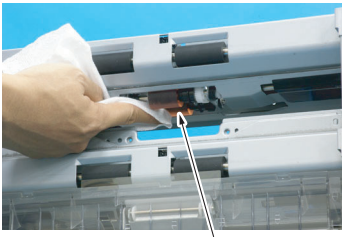

A0XWF2C016DA

3. Using a cleaning pad dampened with alcohol, wipe the pick-up roller [1] clean of dirt.
4. Repeat steps 1 to 3 similarly for the 4th drawer.

3.5.4 Vertical transport roller

1. Open the right door.

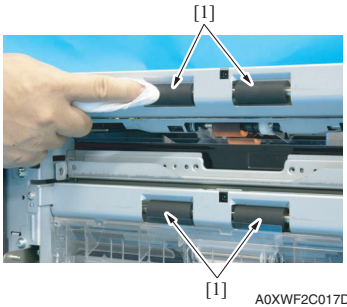

A0XWF2C017DA

2. Using a cleaning pad dampened with alcohol, wipe the vertical transport roller [1] clean of dirt.

Blank Page

ADJUSTMENT/SETTING

4. How to use the adjustment section

- “Adjustment/Setting” contains detailed information on the adjustment items and procedures for this machine.
- Throughout this “Adjustment/Setting,” the default settings are indicated by “ ”.

Advance checks

Before attempting to solve the customer problem, the following advance checks must be made. Check to see if:

- The power supply voltage meets the specifications.
- The power supply is properly grounded.
- The machine shares the power supply with any other machine that draws large current intermittently (e.g., elevator and air conditioner that generate electric noise).
- The installation site is environmentally appropriate: high temperature, high humidity, direct sunlight, ventilation, etc.; levelness of the installation site.
- The original has a problem that may cause a defective image.
- The density is properly selected.
- The original glass, slit glass, or related part is dirty.
- Correct paper is being used for printing.
- The units, parts, and supplies used for printing (developer, PC drum, etc.) are properly replenished and replaced when they reach the end of their useful service life.
- Toner is not running out.

⚠ CAUTION

- **Be sure to unplug the power cord of the machine before starting the service job procedures.**
- **If it is unavoidably necessary to service the machine with its power turned ON, use utmost care not to be caught in the scanner cables or gears of the exposure unit.**
- **Special care should be used when handling the fusing unit which can be extremely hot.**
- **The developing unit has a strong magnetic field. Keep watches and measuring instruments away from it.**
- **Take care not to damage the PC drum with a tool or similar device.**
- **Do not touch IC pins with bare hands.**

5. MECHANICAL ADJUSTMENT

5.1 Adjusting the paper reference position

NOTE

- **Make this adjustment after any of the following procedures has been performed.**
  When the PH unit has been replaced.
  When the image on the print is offset in the main scan direction.
  When adjustment in the following screen does not resolve a problem.
  [Service Mode] - [Machine] - [Printer Area] - [Centering].

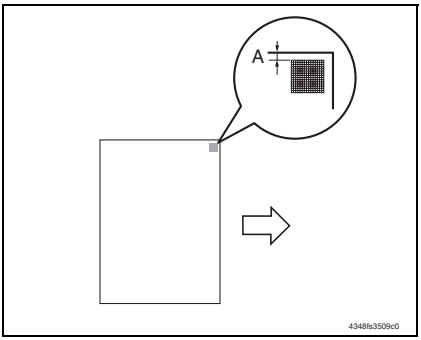

1. Measure the width of printed reference line A.
Specification: 3.0 mm ± 1.0 mm

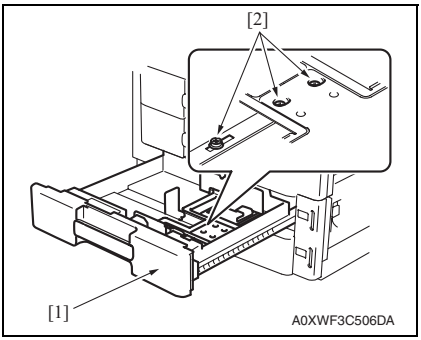

2. Slide out the drawer [1] and unload paper from it.
3. Loosen two screws [2] at the center of the paper lifting plate.

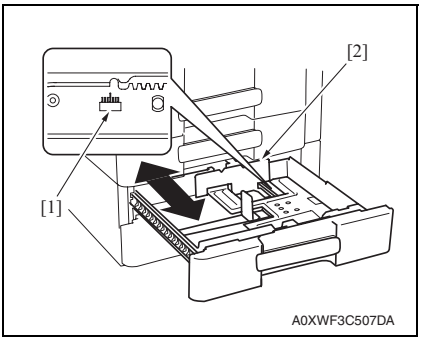

4. Watching the graduations [1] provided in the drawer, move the edge guide [2] in the rear.

- If width A is greater than the specified value, move the edge guide toward the front.
- If width A is smaller than the specified value, move the edge guide toward the rear.

5. Perform another test print and check the reference deviation.

KONICA MINOLTA

SERVICE MANUAL

FIELD SERVICE

PC-409

2010.04

KONICA MINOLTA BUSINESS TECHNOLOGIES, INC. Ver. 1.0

Revision history

After publication of this service manual, the parts and mechanism may be subject to change for improvement of their performance.
Therefore, the descriptions given in this service manual may not coincide with the actual machine.

When any change has been made to the descriptions in the service manual, a revised version will be issued with a revision mark added as required.

Revision mark:

- To indicate clearly a section revised, △1 is shown at the left margin of the revised section.
  The number inside △1 represents the number of times the revision has been made.

- To indicate clearly a page that contains the revision, ▲1 is shown near the page number of the corresponding page.
  The number inside ▲1 represents the number of times the revision has been made.

NOTE

Revision marks shown in a page are restricted only to the latest ones with the old ones deleted.

- When a page revised in Ver. 2.0 has been changed in Ver. 3.0:
  The revision marks for Ver. 3.0 only are shown with those for Ver. 2.0 deleted.
- When a page revised in Ver. 2.0 has not been changed in Ver. 3.0:
  The revision marks for Ver. 2.0 are left as they are.

2010/04	1.0	—	Issue of the first edition
Date	Service manual Ver.	Revision mark	Descriptions of revision

CONTENTS

PC-409

OUTLINE

1. PRODUCT SPECIFICATION 1

MAINTENANCE

2. PERIODICAL MAINTENANCE PROCEDURE 3
2.1 Paper feed section 3
2.1.1 Replacing the separation roller 3
2.1.2 Replacing the feed roller 5
2.1.3 Replacing the pick-up roller 9
3. OTHER MAINTENANCE ITEM 12
3.1 Items not allowed to be disassembled and adjusted 12
3.2 Disassembly/reassembly parts list 13
3.3 Cleaning parts list 13
3.4 Disassembly/reassembly parts list 13
3.4.1 Right door 13
3.4.2 Rear right cover/Lower right cover/Front right cover 14
3.4.3 Rear cover/Left cover 14
3.4.4 Paper feed cabinet 15
3.4.5 PC Control board (PCCB51) 17
3.4.6 Tray 3 LED board (LEDB51) 17
3.4.7 Paper feed motor (M51) / Vertical transport motor (M52) 18
3.4.8 Division board position motor (M53) 20
3.4.9 Shift motor (M4) 21
3.4.10 Tray lock solenoid (SD51) 22
3.4.11 Drawer 23
3.4.12 Wire 24
3.5 Cleaning point 28
3.5.1 Separation roller 28
3.5.2 Feed roller 28
3.5.3 Pick-up roller 29
3.5.4 Vertical transport roller 30

ADJUSTMENT/SETTING

4. How to use the adjustment section 31
5. MECHANICAL ADJUSTMENT 32
5.1 Adjusting the paper reference position 32
5.2 Shifter movement timing belt adjustment 34

OUTLINE

1. PRODUCT SPECIFICATION

A. Type

Name	Large capacity cabinet
Type	Front loading type LCC
Installation	Desk type
Document alignment	Center

B. Paper

Type	Size	Capacity
Plain paper (60 to 90 g/m^2 (16 to 24 lb))	Metric area: A4, Inch area: 8 $^1/_2$ x 11	2,500 sheets

C. Machine specifications

Power requirements	DC 24 V ± 10% (supplied from the main body)
	DC 5 V ± 5%
Max. power consumption	45 W or less
Dimensions	600 mm (W) x 603 mm (D) x 325 mm (H) 23.62 inch (W) x 23.74 inch (D) x 12.79 inch (H)
Weight	33.0 kg (72.75 lb)

D. Operating environment

Conforms to the operating environment of the main body.

NOTE

- **These specifications are subject to change without notice.**

Blank Page

MAINTENANCE

2. PERIODICAL MAINTENANCE PROCEDURE

2.1 Paper feed section

2.1.1 Replacing the separation roller

A. Periodically replaced parts/cycle

- Separation roller: Every 300,000 feed

NOTE

- **Replace the separation roller, feed roller and pick-up roller at the same time.**

B. Procedure

1. Remove the right door.
See P.13

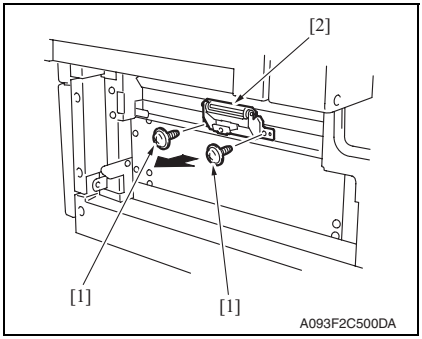

2. Remove two screws [1] and remove the separation roller mounting bracket assy [2].

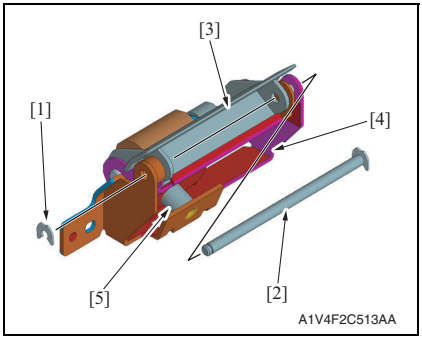

3. Remove the C-ring [1], and remove the shaft [2].

4. Remove the guide [3] and bracket [4].

NOTE

- **Be careful not to lose spring [5] at this time.**

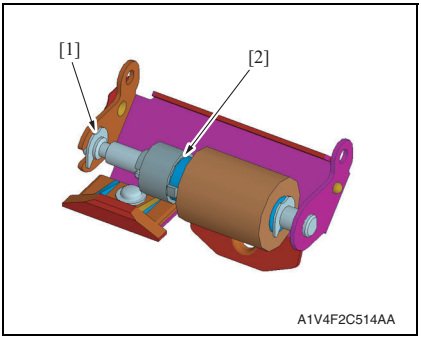

5. Remove the C-ring [1], and remove the separation roller assy [2].

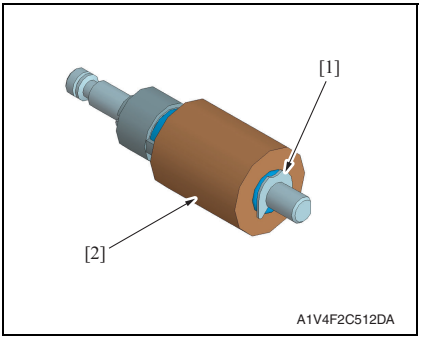

6. Remove the C-ring [1], and remove the separation roller [2].

7. Reinstall the above parts following the removal steps in reverse.

NOTE

- **Install the separation roller assy while pressing the holder down so that it aligns to the metal bracket of the machine.**
- **Make sure that the separation roller assy is not tilted to the right or left when installed.**

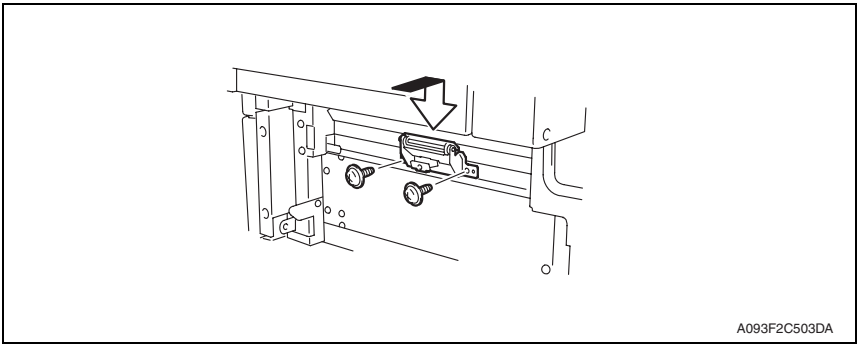

2.1.2 Replacing the feed roller

A. Periodically replaced parts/cycle

- Feed roller: Every 300,000 feed

NOTE

- **Replace the separation roller, feed roller and pick-up roller at the same time.**

B. Procedure

1. Remove the rear right cover.
See P.14

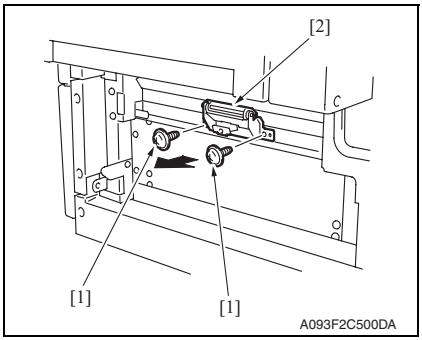

2. Remove two screws [1] and separation roller mounting bracket assy [2].

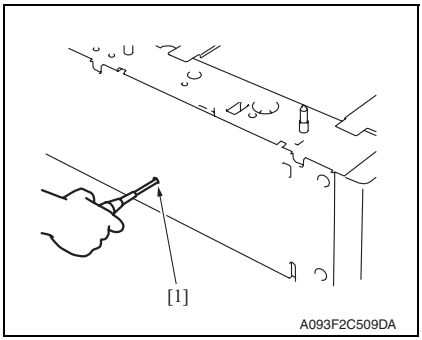

3. Insert a driver into the hole [1] at the rear of the feed tray and pull out the paper feed tray.

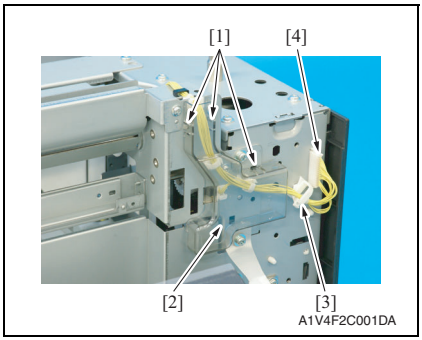

4. Unlock three tabs [1], and remove the harness cover [2].
5. Remove the harness from two wire saddles [3].
6. Disconnect the connector [4].

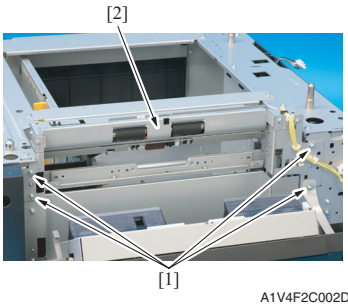

A1V4F2C002DA

7. Remove four screws [1] and remove the feed unit [2].

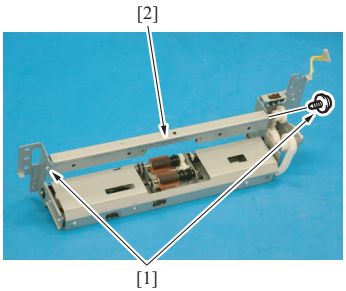

A0XWF2C020DA

8. Remove two screws [1] and remove the mounting frame [2] for the paper separation roller mounting bracket assy.

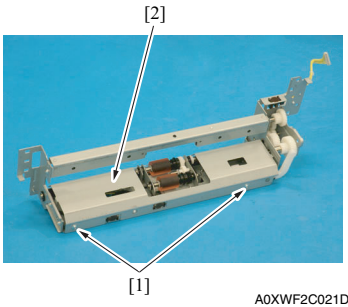

A0XWF2C021DA

9. Remove two screws [1] and remove the feed roller cover [2].

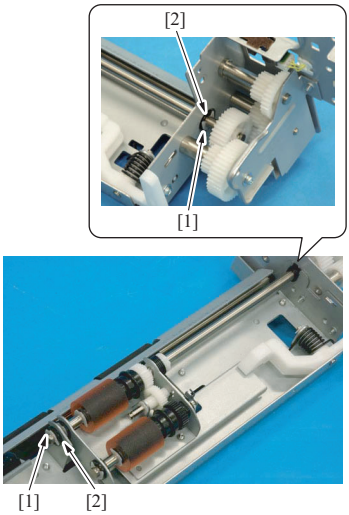

A0XWF2C022DA

10. Remove two C-rings [1] and remove two bushings [2].

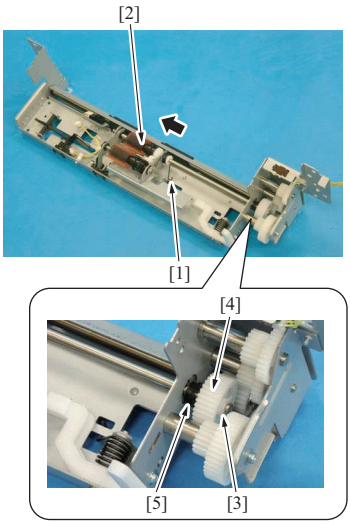

A0XWF2C023DA

11. Detach the hook [1] of the spring and shift the shaft assy [2] in the direction shown in the illustration.
12. Remove the C-ring [3], the gear [4] and the bushing [5].
13. Remove the shaft assy [2].

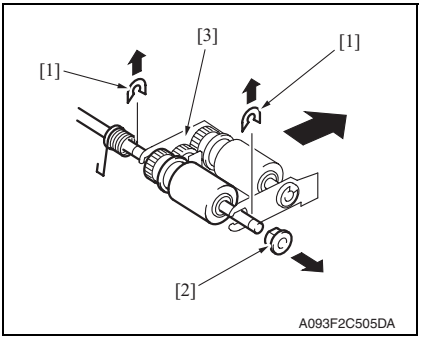

14. Remove two C-rings [1] and the bushing [2], and remove the pick-up roller fixing bracket assy [3].

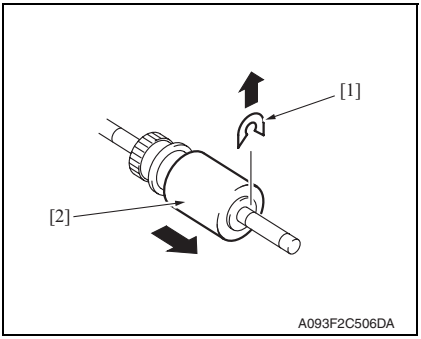

15. Remove the C-ring [1] and remove the feed roller [2].

16. Reinstall the above parts following the removal steps in reverse.

2.1.3 Replacing the pick-up roller

A. Periodically replaced parts/cycle

- Pick-up roller: Every 300,000 feed

NOTE

- **Replace the separation roller, feed roller and pick-up roller at the same time.**

B. Procedure

1. Remove the rear right cover.
See P.14

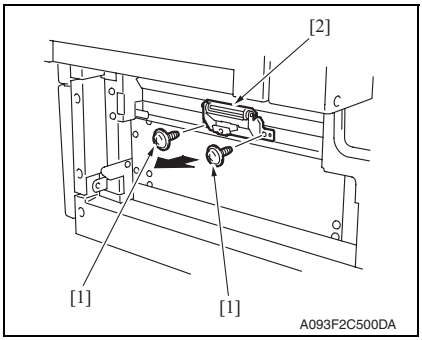

2. Remove two screws [1] and separation roller mounting bracket assy [2].

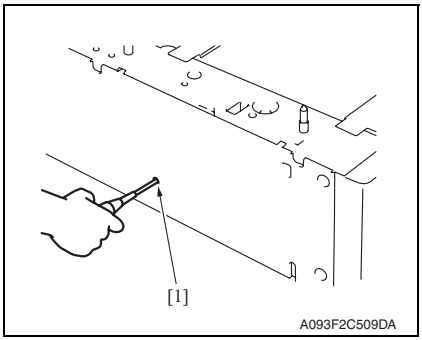

3. Insert a driver into the hole [1] at the rear of the feed tray and pull out the paper feed tray.

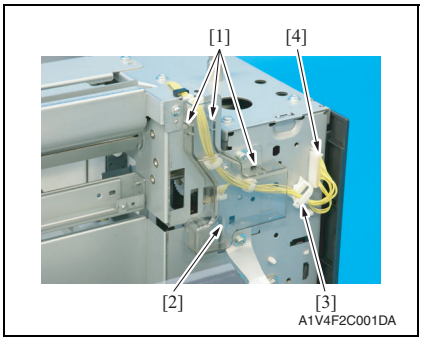

4. Unlock three tabs [1], and remove the harness cover [2].
5. Remove the harness from two wire saddles [3].
6. Disconnect the connector [4].

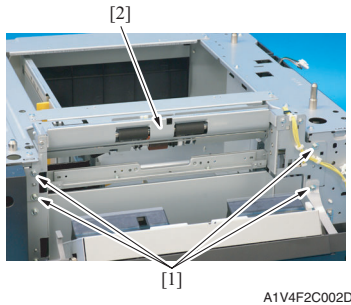

A1V4F2C002DA

7. Remove four screws [1] and remove the feed unit [2].

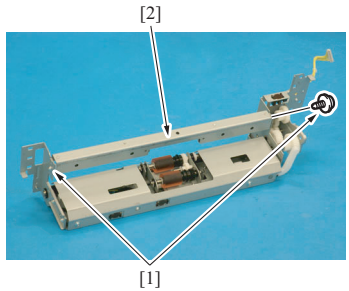

A0XWF2C020DA

8. Remove two screws [1] and remove the mounting frame [2] for the paper separation roller mounting bracket assy.

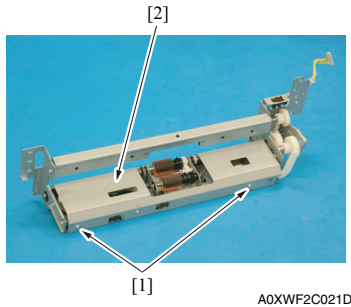

A0XWF2C021DA

9. Remove two screws [1] and remove the feed roller cover [2].

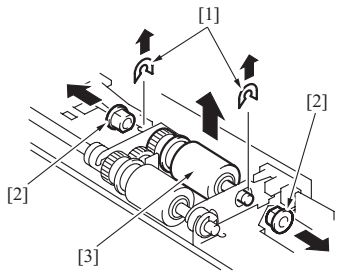

A093F2C507DA

10. Remove two C-rings [1], two bushings [2], and the pick-up roller assy [3].

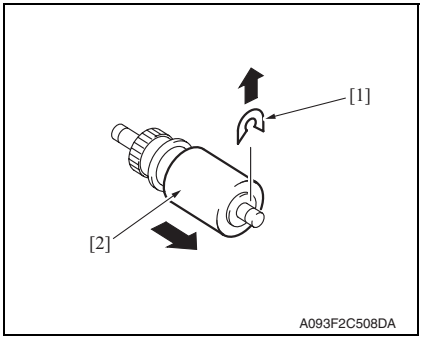

11. Remove the C-ring [1] and remove the pick-up roller [2].

12. Reinstall the above parts following the removal steps in reverse.

3. OTHER MAINTENANCE ITEM

3.1 Items not allowed to be disassembled and adjusted

A. Paint-locked screws

NOTE

- **To prevent loose screws, a screw lock in blue or green series color is applied to the screws.**
- **The screw lock is applied to the screws that may get loose due to the vibrations and loads created by the use of machine or due to the vibrations created during transportation.**
- **If the screw lock coated screws are loosened or removed, be sure to apply a screw lock after the screws are tightened.**

B. Red-painted screws

NOTE

- **The screws which are difficult to be adjusted in the field are painted in red in order to prevent them from being removed by mistake.**
- **Do not remove or loosen any of the red-painted screws in the field. It should also be noted that, when two or more screws are used for a single part, only one representative screw may be marked with the red paint.**

C. Variable resistors on board

NOTE

- **Do not turn the variable resistors on boards for which no adjusting instructions are given in Adjustment/Setting.**

D. Removal of PWBs

⚠ CAUTION

- **When removing a circuit board or other electrical component, refer to “Handling of PWBs” and follow the corresponding removal procedures.**
- **The removal procedures given in the following omit the removal of connectors and screws securing the circuit board support or circuit board.**
- **Where it is absolutely necessary to touch the ICs and other electrical components on the board, be sure to ground your body.**

3.2 Disassembly/reassembly parts list

Section	Part name	Ref. page
Exterior parts	Right door	P.13
	Rear right cover	P.14
	Lower right cover	P.14
	Front right cover	P.14
	Rear cover	P.14
	Left cover	P.14
Unit	Drawer	P.23
Boards	PC control board (PCCB51)	P.17
	Tray 3 LED board (LEDB51)	P.17
Motors	Paper feed motor (M51)	P.18
	Vertical transport motor (M52)	P.18
	Division board position motor (M53)	P.20
	Shift motor (M54)	P.21
Solenoid	Tray lock solenoid (SD51)	P.22
Other	Wire	P.24

3.3 Cleaning parts list

Section	Part name	Ref. page
Feed section	Separation roller	P.28
	Feed roller	P.28
	Pick-up roller	P.29
Transport section	Vertical transport roller	P.30

3.4 Disassembly/reassembly parts list

3.4.1 Right door

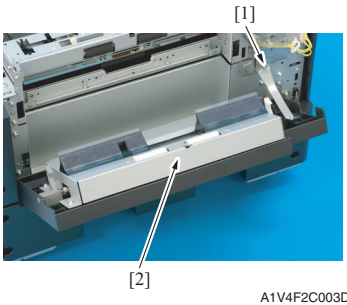

1. Open the right door.
2. Remove the screw [1], and remove the right door [2].

3.4.2 Rear right cover/Lower right cover/Front right cover

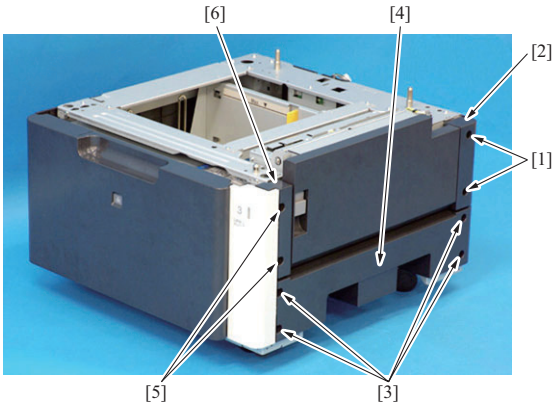

A1V4F2C004DA

1. Remove two screws [1] and remove the rear right cover [2].
2. Remove four screws [3] and remove the lower right cover [4].
3. Remove two screws [5] and remove the front right cover [6].

3.4.3 Rear cover/Left cover

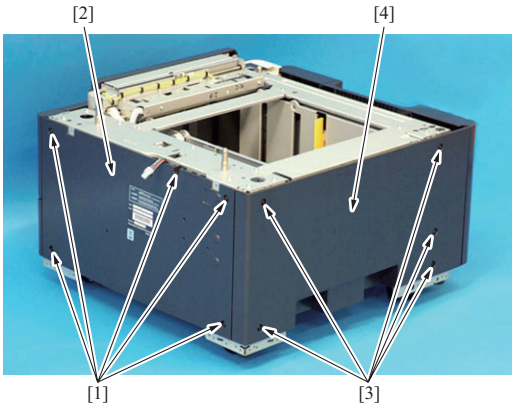

A1V4F2C005DA

1. Remove five screws [1] and remove the rear cover [2].
2. Remove five screws [3] and remove the left cover [4].

3.4.4 Paper feed cabinet

1. Slide out the tray 2 and tray 3.

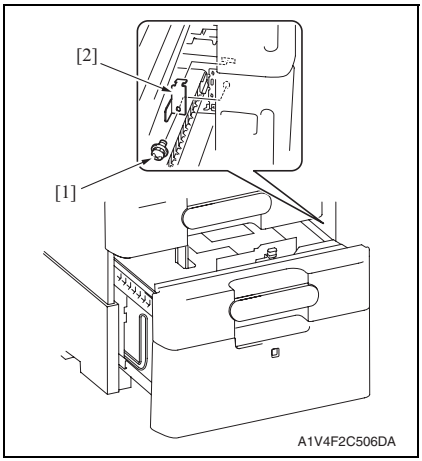

2. Remove the screw [1], and remove the fixing bracket [2].

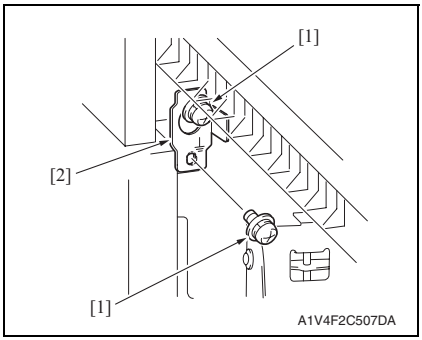

3. Remove two screws [1], and remove the fixing bracket [2].

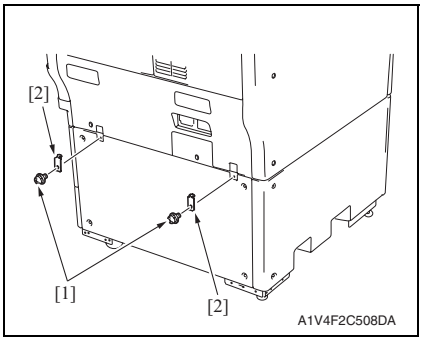

4. Remove the screw [1], and remove two fixing brackets [2].

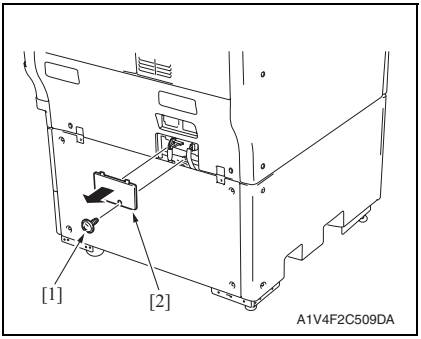

5. Remove the screw [1], and remove the cover [2].

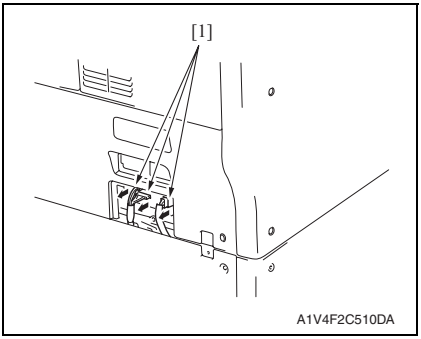

6. Disconnect three connectors [1].

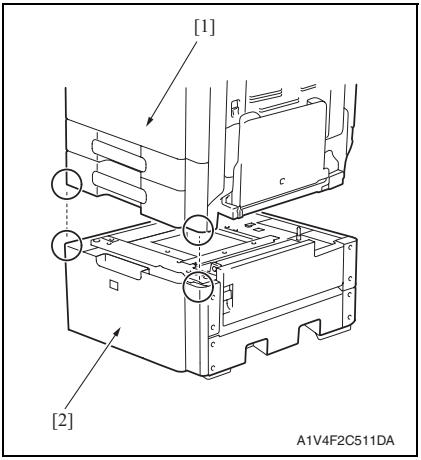

7. Lift the main body [1] and then remove the paper feed cabinet [2].

3.4.5 PC Control board (PCCB51)

1. Remove the rear cover.
See P.14

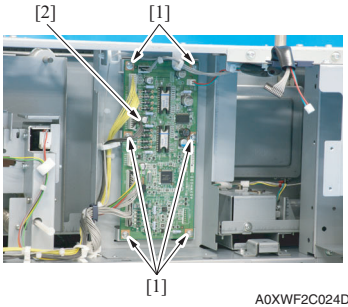

2. Disconnect all connectors of the PC control board.
3. Remove six screws [1], and remove the PC control board [2].

4. Reinstall the above parts following the removal steps in reverse.

3.4.6 Tray 3 LED board (LEDB51)

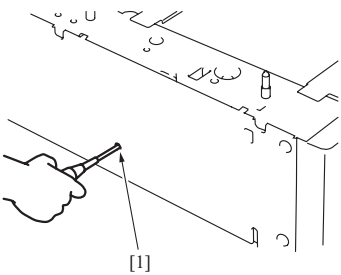

1. Insert a driver into the hole [1] at the rear of the feed tray and pull out the paper feed tray.

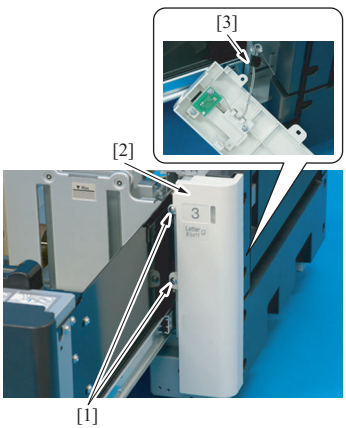

2. Remove two screws [1], and remove the cover [2].
3. Disconnect the connector [3].

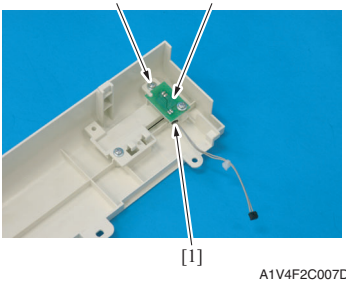

A1V4F2C007DA

4. Disconnect the connector [1].
5. Remove the screw [2], and remove the tray 3 LED board [3].

3.4.7 Paper feed motor (M51) / Vertical transport motor (M52)

1. Remove the rear cover.
See P.14

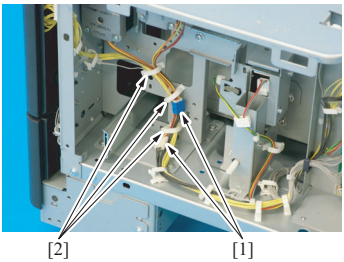

A1V4F2C008DA

2. Disconnect two connectors [1].
3. Remove the harness from three wire saddles [2].

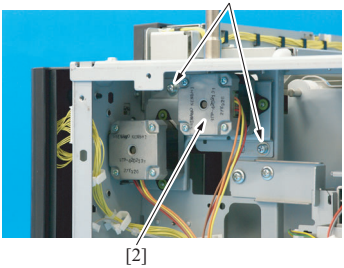

A1V4F2C009DA

4. Remove two screws [1], and remove the motor assy [2].

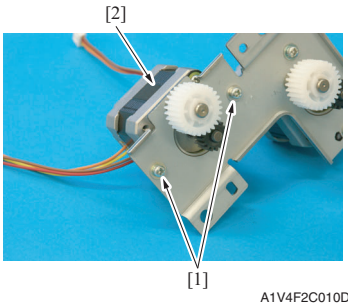

A1V4F2C010DA

5. Remove two screws [1], and remove the paper feed motor [2].

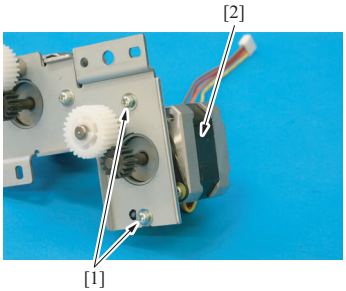

A1V4F2C011DA

6. Remove two screws [1], and remove the vertical transport motor [2].

7. Reinstall the above parts following the removal steps in reverse.

3.4.8 Division board position motor (M53)

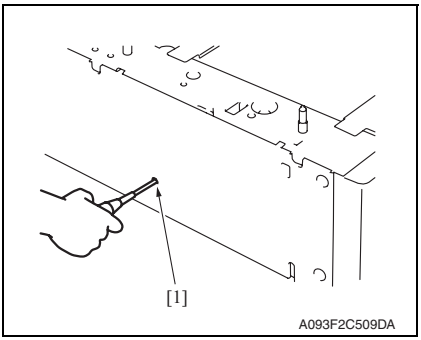

1. Insert a driver into the hole [1] at the rear of the feed tray and pull out the paper feed tray.

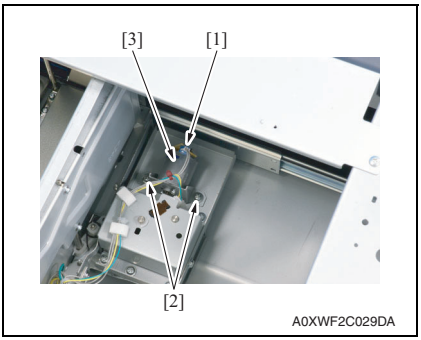

2. Disconnect the connector [1].
3. Remove two screws [2], and remove the division board position motor assy [3].

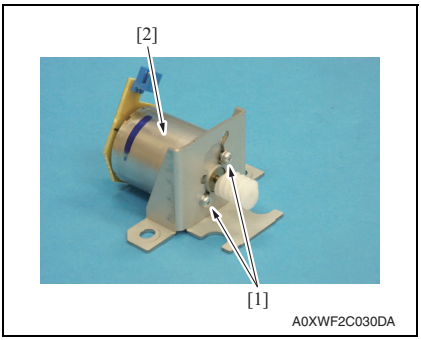

4. Remove two screws [1], and remove the division board position motor [2].

5. Reinstall the above parts following the removal steps in reverse.

3.4.9 Shift motor (M4)

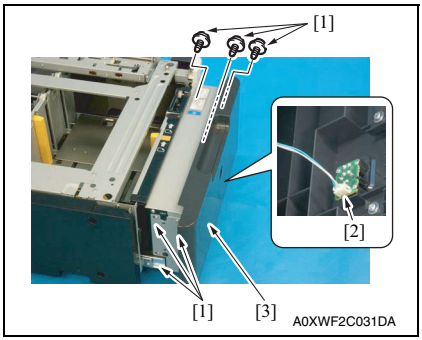

1. Remove six screws [1].
2. Disconnect the connector [2], and remove the front cover assy [3].

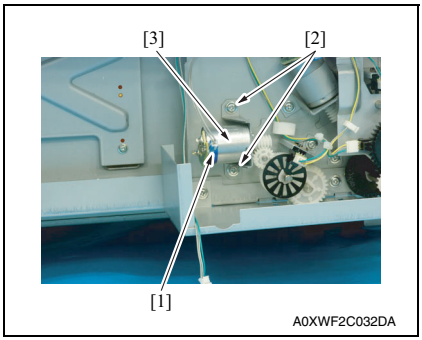

3. Disconnect the connector [1].
4. Remove two screws [2], and remove the shift motor assy [3].

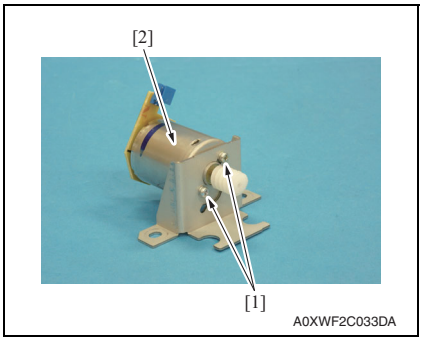

5. Remove two screws [1], and remove the shift motor [2].

6. Reinstall the above parts following the removal steps in reverse.

3.4.10 Tray lock solenoid (SD51)

1. Remove the rear cover.
See P.14

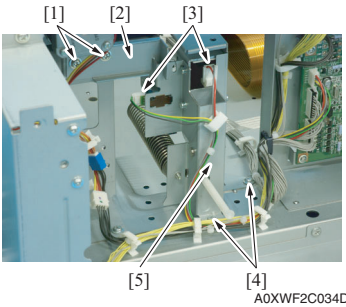

2. Remove two screws [1], and remove the plate [2].
3. Disconnect two connectors [3].
4. Remove two screws [4], and remove the tray lock solenoid assy [5].

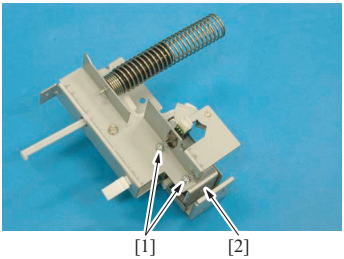

5. Remove two screws [1], and remove the tray lock solenoid [2].

6. Reinstall the above parts following the removal steps in reverse.

3.4.11 Drawer

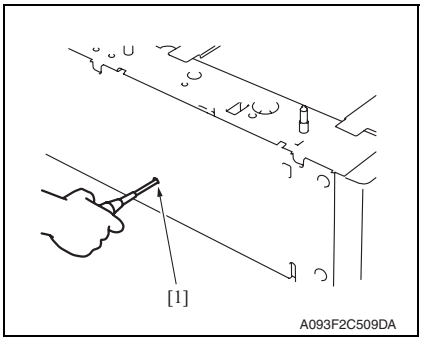

1. Insert a driver into the hole [1] at the rear of the feed tray and pull out the paper feed tray.
2. Remove the paper.

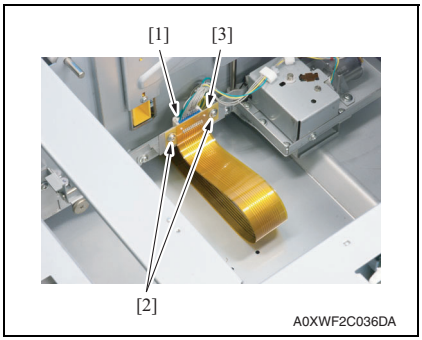

3. Disconnect the connector [1].
4. Remove two screws [2], and remove the connector board [3].

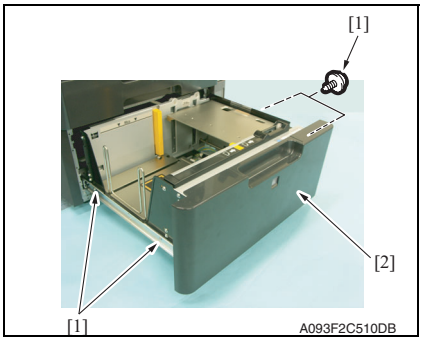

5. Remove four screws [1] and remove the drawer [2].

NOTE

- **When removing the drawer, be careful not to drop the drawer from the guide rails.**

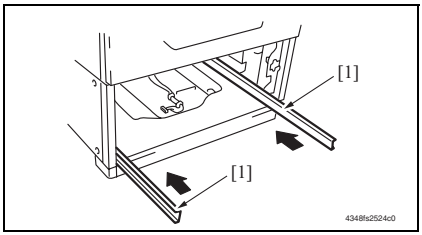

⚠ **CAUTION**

- **To prevent injuries, slide the guide rail [1] into the machine.**

6. Reinstall the above parts following the removal steps in reverse.

3.4.12 Wire

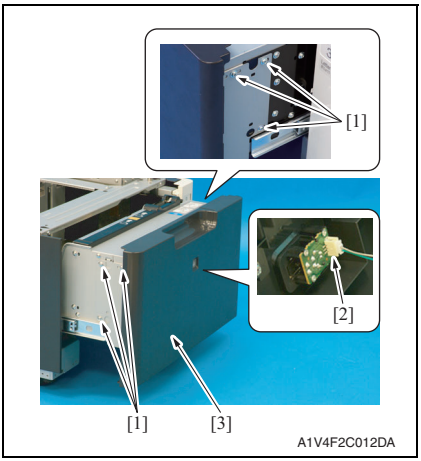

1. Remove six screws [1].
2. Disconnect the connector [2], and remove the front cover assy [3].

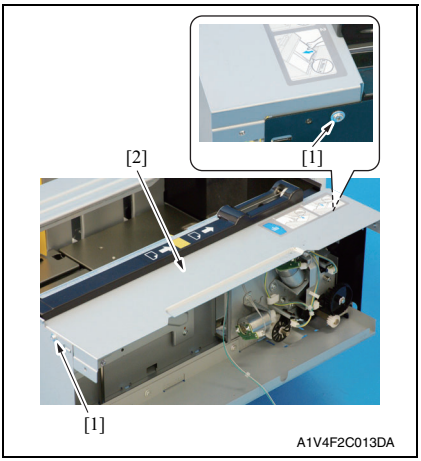

3. Remove two screws [1] and the inner cover assy [2].

NOTE

- **Do not peel off pulley protective mylar sheet.**

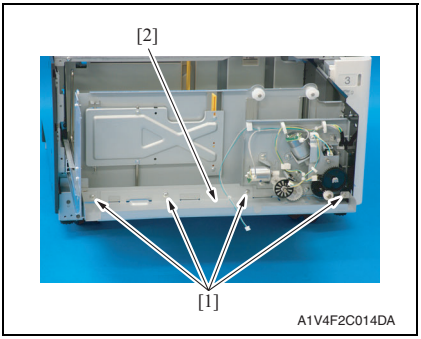

4. Remove four screws [1] and remove the driver cover [2].

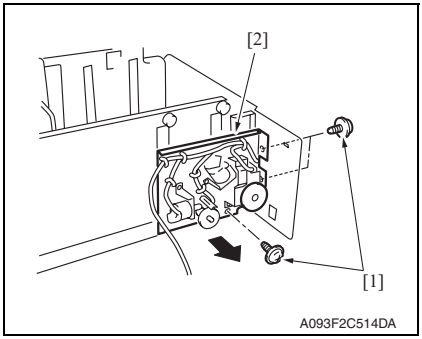

5. Remove three screws [1] and remove the driver mounting plate assy [2].

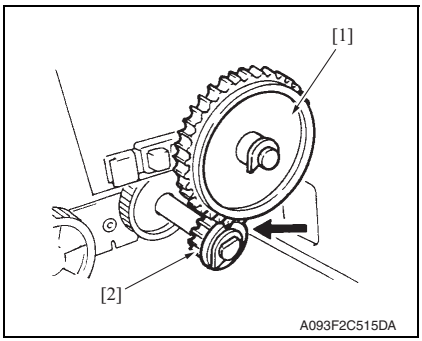

NOTE

- **When assembling, be sure to engage rib of gear 1 [1] with convex section of gear 2 [2].**

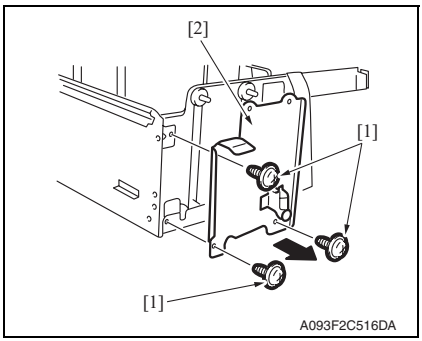

6. Remove three screws [1] and remove the reinforcement bracket assy [2].

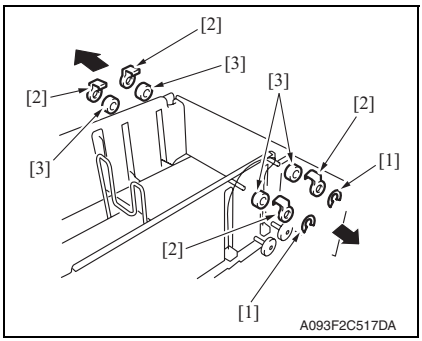

7. Remove two C-clips [1].
8. Remove four pulley covers [2].
9. Unhook four pulleys [3].

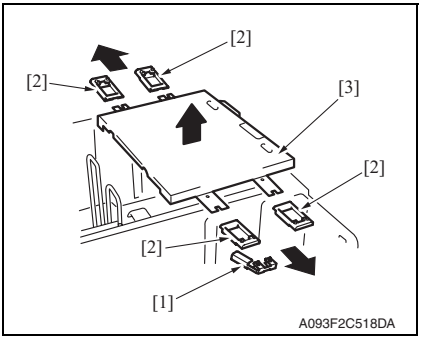

10. Remove the ground plate [1].
11. Remove four cable holding jigs [2] and remove the main drawer [3].

NOTE

- **Use care not to bend the wires.**

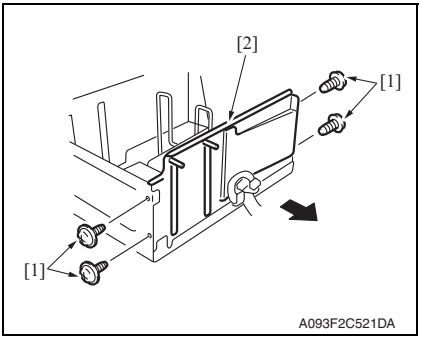

12. Remove four screws [1] and remove the rear trailing edge assy [2].

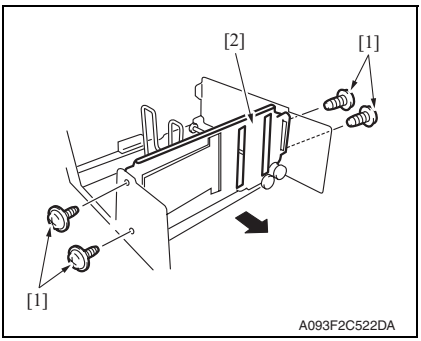

13. Remove four screws [1] and remove the front trailing edge assy [2].

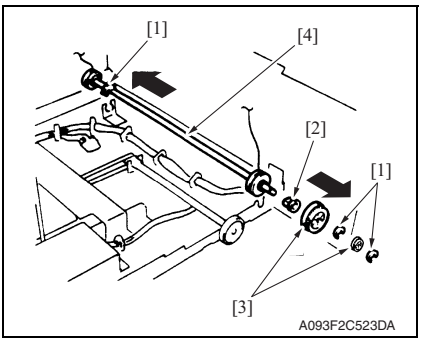

14. Remove three C-rings [1], the bushing [2], and two gears [3].
15. Remove the feed drum assy [4].

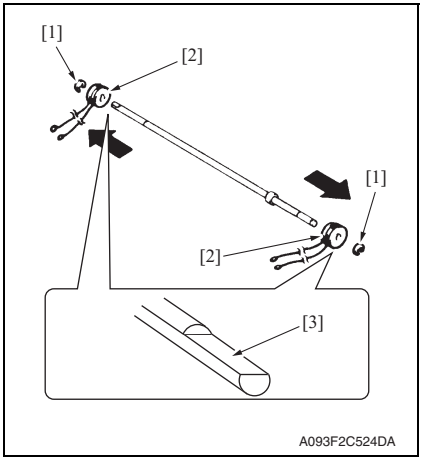

16. Remove two C-rings [1] and the feed drum [2].

NOTE

- **Take care not to lose fixing pins.**
- **When reinstalling the feed drum, check that the direction of the wire coming from both feed drums are the same.**
- **Install so that cut parts [3] at both ends of shaft face up.**

17. Reinstall the above parts following the removal steps in reverse.

3.5 Cleaning point

NOTE

- **The alcohol described in the cleaning procedure represents the isopropyl alcohol.**

3.5.1 Separation roller

1. Remove the right door.
See P.13

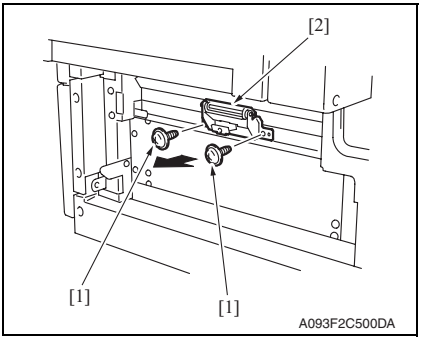

2. Remove two screws [1] and separation roller mounting bracket assy [2].

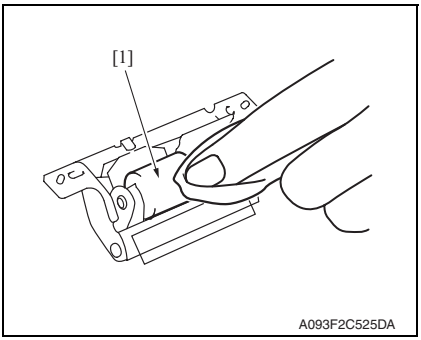

3. Using a cleaning pad dampened with alcohol, wipe the separation roller [1] clean of dirt.

3.5.2 Feed roller

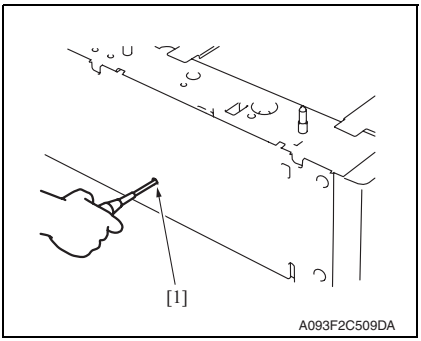

1. Insert a driver into the hole [1] at the rear of the feed tray and pull out the paper feed tray.

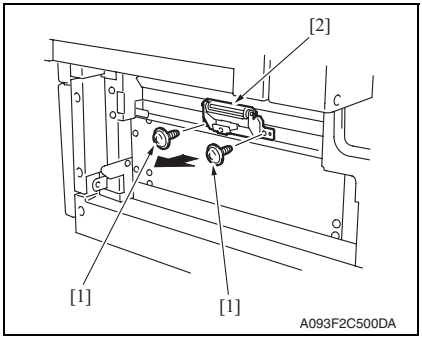

2. Remove two screws [1] and separation roller mounting bracket assy [2].

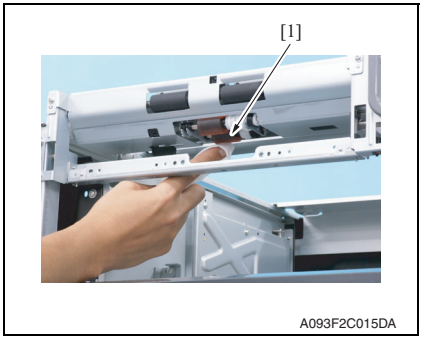

3. Using a cleaning pad dampened with alcohol, wipe the feed roller [1] clean of dirt.

3.5.3 Pick-up roller

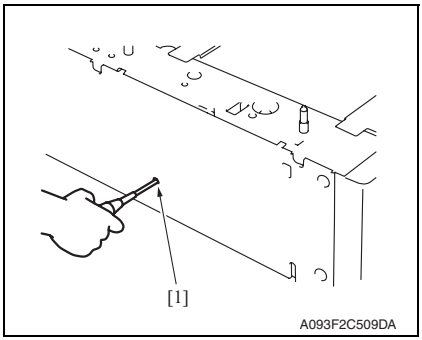

1. Insert a driver into the hole [1] at the rear of the feed tray and pull out the paper feed tray.

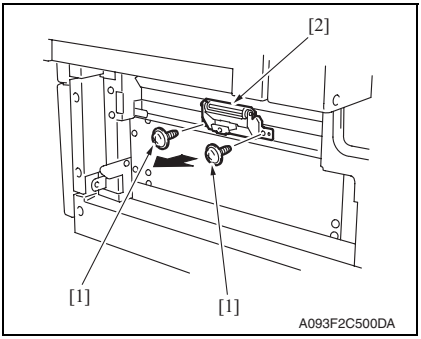

2. Remove two screws [1] and separation roller mounting bracket assy [2].

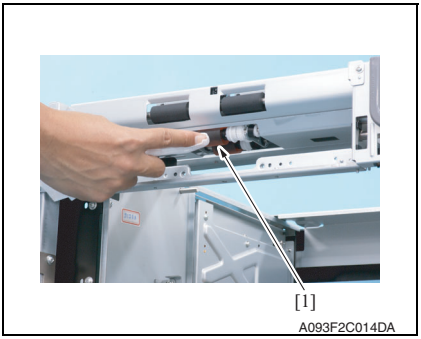

3. Using a cleaning pad dampened with alcohol, wipe the pick-up roller [1] clean of dirt.

3.5.4 Vertical transport roller

1. Open the right door.

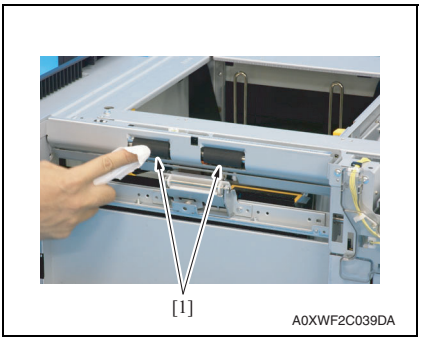

2. Using a cleaning pad dampened with alcohol, wipe the vertical transport roller [1] clean of dirt.

ADJUSTMENT/SETTING

4. How to use the adjustment section

- “Adjustment/Setting” contains detailed information on the adjustment items and procedures for this machine.
- Throughout this “Adjustment/Setting,” the default settings are indicated by “ ”.

Advance checks

Before attempting to solve the customer problem, the following advance checks must be made. Check to see if:

- The power supply voltage meets the specifications.
- The power supply is properly grounded.
- The machine shares the power supply with any other machine that draws large current intermittently (e.g., elevator and air conditioner that generate electric noise).
- The installation site is environmentally appropriate: high temperature, high humidity, direct sunlight, ventilation, etc.; levelness of the installation site.
- The original has a problem that may cause a defective image.
- The density is properly selected.
- The original glass, slit glass, or related part is dirty.
- Correct paper is being used for printing.
- The units, parts, and supplies used for printing (developer, PC drum, etc.) are properly replenished and replaced when they reach the end of their useful service life.
- Toner is not running out.

⚠ CAUTION

- **Be sure to unplug the power cord of the machine before starting the service job procedures.**
- **If it is unavoidably necessary to service the machine with its power turned ON, use utmost care not to be caught in the scanner cables or gears of the exposure unit.**
- **Special care should be used when handling the fusing unit which can be extremely hot.**
- **The developing unit has a strong magnetic field. Keep watches and measuring instruments away from it.**
- **Take care not to damage the PC drum with a tool or similar device.**
- **Do not touch IC pins with bare hands.**

5. MECHANICAL ADJUSTMENT

5.1 Adjusting the paper reference position

NOTE

- **Make this adjustment after any of the following procedures has been performed.**
  When the PH unit has been replaced.
  When the image on the print is offset in the main scan direction.
  When adjustment in the following screen does not resolve a problem.
  [Service Mode] - [Machine] - [Printer Area] - [Centering].

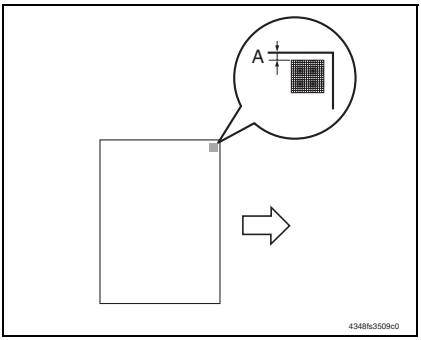

1. Measure the width of printed reference line A.
Specification: 3.0 mm ± 1.0 mm

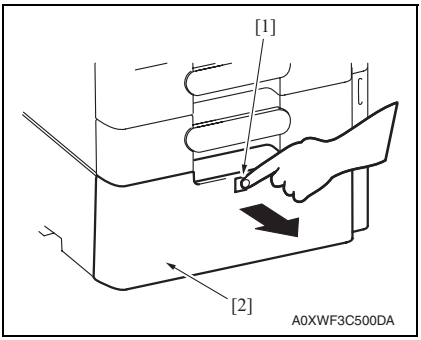

2. Press the drawer release button [1] and then slide out the drawer [2] from the paper feed cabinet.

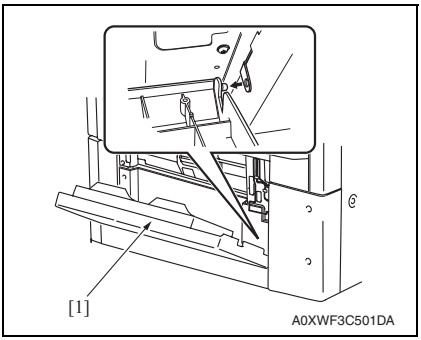

3. Remove the right door [1].

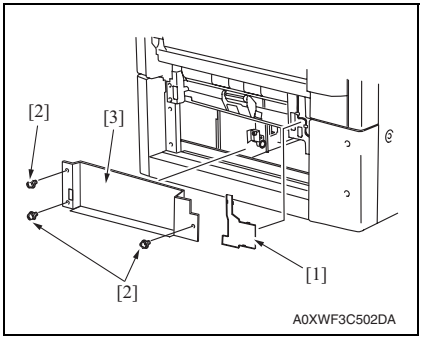

4. Remove the harness cover [1].
5. Remove three screws [2], and remove the plate [3].

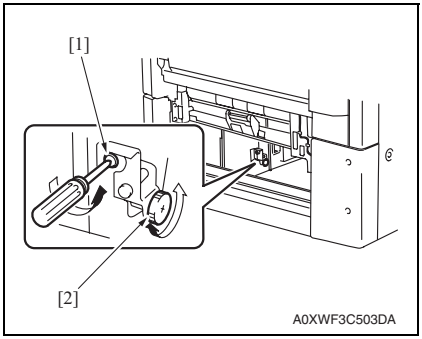

6. Loosen the adjustment screw [1] and turn screw [2] to make the adjustment.

NOTE

- **Do not damage the passage surface of the right door.**

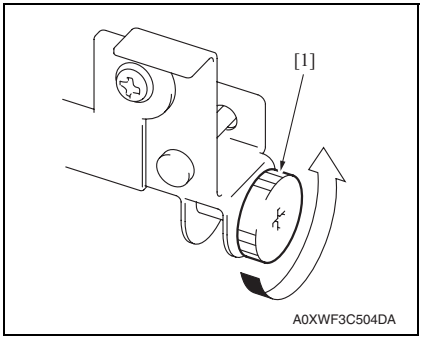

- If width A is greater than the specified value:
  Turn screw [1] counterclockwise.

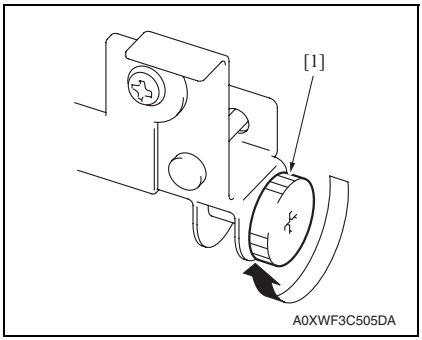

- If width A is smaller than the specified value:
  Turn screw [1] clockwise.

7. Perform another test print and check the reference deviation.

5.2 Shifter movement timing belt adjustment

1. Remove the drawer.
See P.23

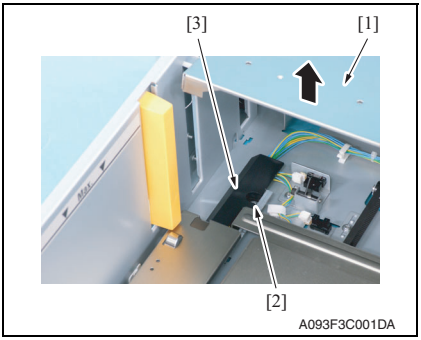

2. While raising the main tray [1], remove the screw [2] and the connector cover [3].

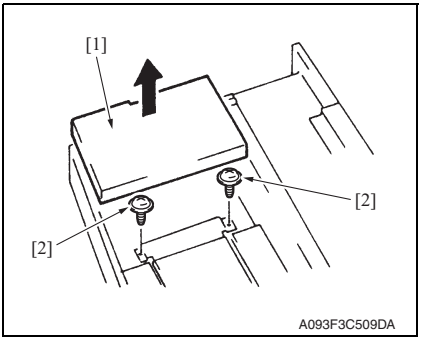

3. While raising the main tray [1], remove two screws [2] that hold the shift tray in position.

NOTE

- **When reinstalling, use caution because the wire of the main tray [1] comes off easily.**

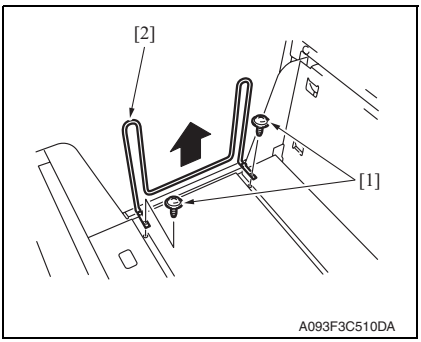

4. Remove two screws [1] and remove the shifter [2].

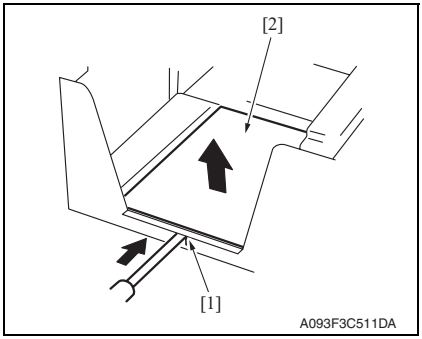

5. Push the tab [1] of the shift tray [2] as shown on the left and release the lock.
6. Remove the shift tray [2].

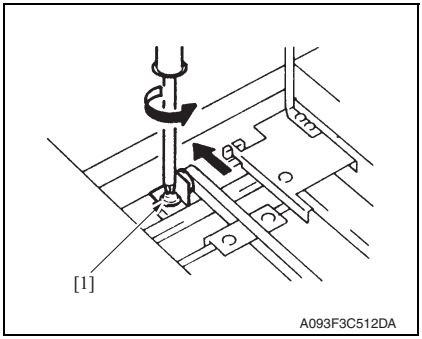

7. Loosen the screw [1] fixing the tension pulley assy as shown on the left and move it in the direction of the arrow.
8. After moving the shifter, tighten the fixing screw [1].

Blank Page

KONICA MINOLTA

SERVICE MANUAL

FIELD SERVICE

JS-505

2010.04

KONICA MINOLTA BUSINESS TECHNOLOGIES, INC. Ver. 1.0

Revision history

After publication of this service manual, the parts and mechanism may be subject to change for improvement of their performance.
Therefore, the descriptions given in this service manual may not coincide with the actual machine.

When any change has been made to the descriptions in the service manual, a revised version will be issued with a revision mark added as required.

Revision mark:

- To indicate clearly a specific section revised within text, △1 is shown at the left margin of the corresponding revised section.
  The number inside △1 represents the number of times the revision has been made.

- To indicate clearly a specific page that contains a revision or revisions, the page number appearing at the left or right bottom of the specific page is marked with ▲1 .
  The number inside ▲1 represents the number of times the revision has been made.

NOTE

Revision marks shown in a page are restricted only to the latest ones with the old ones deleted.

- When a page revised in Ver. 2.0 has been changed in Ver. 3.0:
  The revision marks for Ver. 3.0 only are shown with those for Ver. 2.0 deleted.
- When a page revised in Ver. 2.0 has not been changed in Ver. 3.0:
  The revision marks for Ver. 2.0 are left as they are.

2010/04	1.0	—	Issue of the first edition
Date	Service manual Ver.	Revision mark	Descriptions of revision

CONTENTS

JS-505

OUTLINE

1. PRODUCT SPECIFICATIONS 1

MAINTENANCE

2. PERIODICAL MAINTENANCE PROCEDURE 3
2.1 Paper exit section 3
2.1.1 Cleaning of the roller and roll 3
3. OTHER MAINTENANCE ITEM 4
3.1 Items not allowed to be disassembled and adjusted 4
3.2 Disassembly/reassembly parts list 5
3.3 Disassembly/reassembly procedure 5
3.3.1 Separator 5
3.3.2 Front cover 6
3.3.3 Rear left cover 7
3.3.4 Rear right cover 7
3.3.5 Upper tray 8
3.3.6 Paper guide plate 8
3.3.7 JS control board (JSCB) 9
3.3.8 Transport motor (M1) 9
3.3.9 Route change motor (M3) 10
3.3.10 Shift motor (M2) 11
3.3.11 Roller pressure/retraction clutch (CL1) 14

Blank Page

OUTLINE

1. PRODUCT SPECIFICATIONS

A. Type

Type	Built-in type 2-bin stacker
Installation	Installed in main body
Document alignment	Center

B. Functions

Modes	Sort, group, sort offset, group offset

C. Paper

Exit tray	Size	Type		Capacity
Lower tray	A6S, A5S/A5, B6S, B5S/B5, A4S/A4, B4, A3, A3 Wide, Post card S 5-1/2 X 8-1/2S/5-1/2 X 8-1/2, 8-1/2 X 11S/8-1/2 X 11, 8-1/2 X 14, 11 X 17, 12-1/4 X 18 Max.: 311.1 mm X 1200 mm 12.25 inch X 47.25 inch Min.: 90 mm X 139.7 mm 3.5 inch X 5.5 inch	Plain paper (60 to 90 g/m²) (16 to 24 lb)		150 sheets
		Special paper	Thick paper 1 (91 to 150 g/m²) (24.25 to 40 lb)	20 sheets
			Thick paper 2 (151 to 209 g/m²) (40.25 to 55.5 lb)	
			Thick paper 3 (210 to 256 g/m²) (55.75 to 68 lb)	
			Thick paper 4 (257 to 271 g/m²) (68.25 to 72 lb)	
			OHP film	
			Post card	
			Label	
			Envelope	10 sheets
			Long size paper	1 sheet
Upper tray	A5S, B5S/B5, A4S/A4, B4, A3 8-1/2 X 11S/8-1/2 X 11, 8-1/2 X 14, 11 X 17 Max.: 297 mm X 431.8 mm 11.75 inch X 17 inch Min.: 148 mm X 210 mm 5.75 inch X 8.25 inch	Plain paper (60 to 90 g/m²) (16 to 24 lb)		50 sheets

D. Offset function

Exit tray	Lower tray
Shift amount	30 mm
Types of paper to be used	Plain paper, Thick paper 1/2/3/4
Size	B5S/B5, A4S/A4, B4, A3 8-$^1/_2$ X 11S/8-$^1/_2$ X 11, 8-$^1/_2$ X 14, 11 X 17

E. Machine specifications

Power requirements	DC 24 V ± 10 % (supplied from the main body)
	DC5 V ± 5 %
Max. power consumption	40 W or less
Dimensions	423 mm (W) X 477 mm (D) X 129.5 mm (H) 16.75 inch (W) X 18.75 inch (D) X 5 inch (H) 543 mm (W) X 477 mm (D) X 129.5 mm (H) *1 21.5 inch (W) X 18.75 inch (D) X 5 inch (H) *1
Weight	5.0 kg (11 lb)

*1: Size when the paper exit tray is pulled out

F. Operating environment

- Conforms to the operating environment of the main body.

NOTE

- **These specifications are subject to change without notice.**

MAINTENANCE

2. PERIODICAL MAINTENANCE PROCEDURE

2.1 Paper exit section

NOTE

- **The alcohol described in the cleaning procedure of maintenance represents the isopropyl alcohol.**

2.1.1 Cleaning of the roller and roll

A. Periodically cleaning parts/cycle

- Roller and roll: Every 300,000 prints

1. Remove the separator.
See P.5

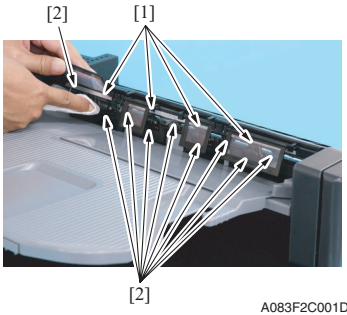

2. Using a cleaning pad dampened with alcohol, wipe the roller [1] and roll [2].

3. Remove the upper tray.
See P.8

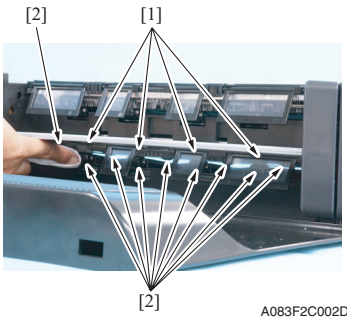

4. Using a cleaning pad dampened with alcohol, wipe the roller [1] and roll [2].

3. OTHER MAINTENANCE ITEM

3.1 Items not allowed to be disassembled and adjusted

A. Paint-locked screws

NOTE

- **To prevent loose screws, a screw lock in blue or green series color is applied to the screws.**
- **The screw lock is applied to the screws that may get loose due to the vibrations and loads created by the use of machine or due to the vibrations created during transportation.**
- **If the screw lock coated screws are loosened or removed, be sure to apply a screw lock after the screws are tightened.**

B. Red-painted screws

NOTE

- **The screws which are difficult to be adjusted in the field are painted in red in order to prevent them from being removed by mistake.**
- **Do not remove or loosen any of the red-painted screws in the field. It should also be noted that, when two or more screws are used for a single part, only one representative screw may be marked with the red paint.**

C. Variable resistors on board

NOTE

- **Do not turn the variable resistors on boards for which no adjusting instructions are given in Adjustment/Setting.**

D. Removal of PWBs

⚠ CAUTION

- **When removing a circuit board or other electrical component, refer to “Handling of PWBs” and follow the corresponding removal procedures.**
- **The removal procedures given in the following omit the removal of connectors and screws securing the circuit board support or circuit board.**
- **Where it is absolutely necessary to touch the ICs and other electrical components on the board, be sure to ground your body.**

3.2 Disassembly/reassembly parts list

Section	Part name	Ref. page
Unit	Separator	P.5
Exterior parts	Front cover	P.6
	Rear left cover	P.7
	Rear right cover	P.7
	Upper tray	P.8
	Paper guide plate	P.8
Board	JS control board (JSCB)	P.9
Motors	Transport motor (M1)	P.9
	Route change motor (M3)	P.10
	Shift motor (M2)	P.11
Clutch	Roller pressure/retraction clutch (CL1)	P.14

3.3 Disassembly/reassembly procedure

3.3.1 Separator

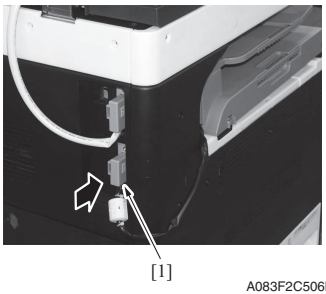

1. Disconnect the relay connector [1].

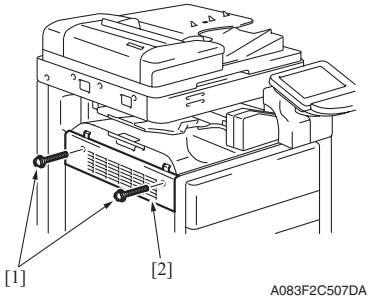

2. Remove two screws [1] and remove the mounting cover [2].

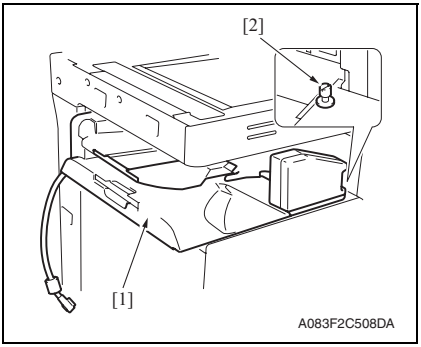

3. Remove the separator [1].

NOTE

- **When installing the job separator, align the U-groove on the job separator with the shoulder screw [2].**

4. Reinstall the above parts following the removal steps in reverse.

3.3.2 Front cover

1. Remove the separator.
See P.5

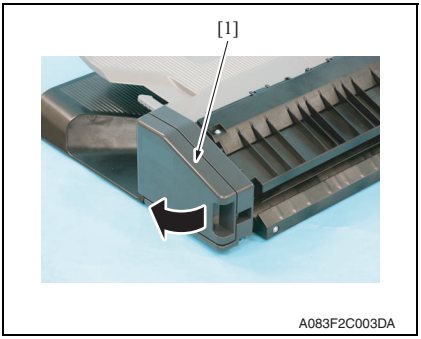

2. Open the misfeed clearing cover [1].

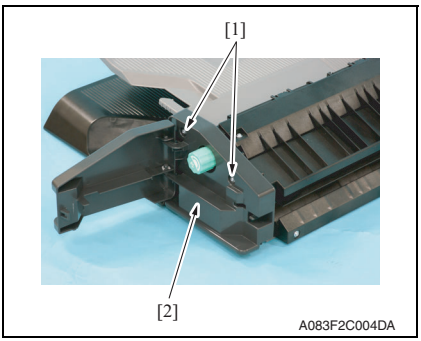

3. Remove two screws [1] and remove the front cover [2].

4. Reinstall the above parts following the removal steps in reverse.

3.3.3 Rear left cover

1. Remove the separator.
   See P.5

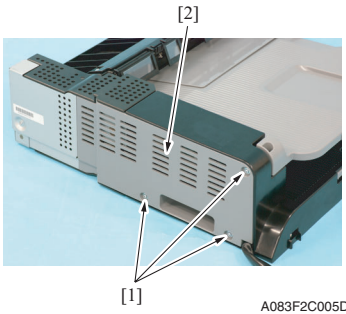

2. Remove three screws [1] and remove the rear left cover [2].
3. Reinstall the above parts following the removal steps in reverse.

3.3.4 Rear right cover

1. Remove the separator.
   See P.5
2. Remove the rear left cover.
   See P.7

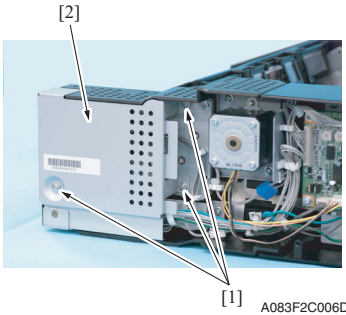

3. Remove three screws [1] and remove the rear right cover [2].
4. Reinstall the above parts following the removal steps in reverse.

3.3.5 Upper tray

1. Remove the separator.
See P.5

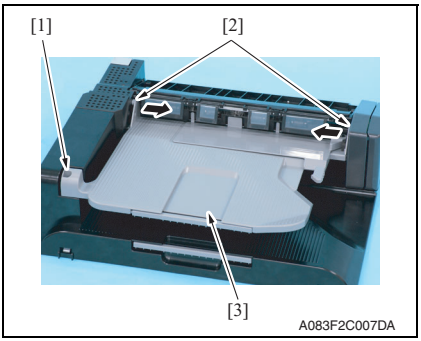

2. Remove the screw [1]. Push two protrusions [2] in the directions of the arrows and remove the upper tray [3].

3. Reinstall the above parts following the removal steps in reverse.

3.3.6 Paper guide plate

1. Remove the separator.
See P.5
2. Remove the upper tray.
See P.8

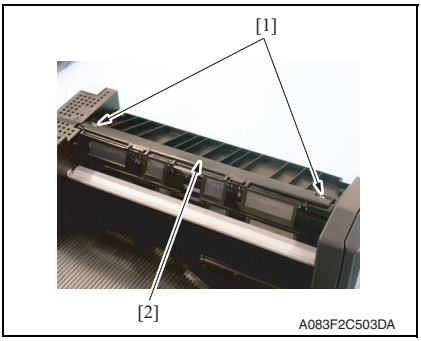

3. Remove two screws [1] and remove the paper guide plate cover [2].

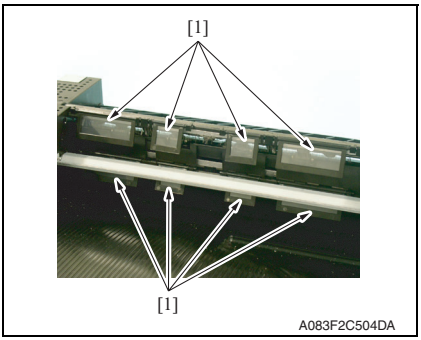

4. Remove eight paper guide plates [1].

NOTE

- **When reinstalling the paper guide plates [1], make sure that the film side must face the roller.**

5. Reinstall the above parts following the removal steps in reverse.

3.3.7 JS control board (JSCB)

1. Remove the separator.
   See P.5
2. Remove the rear left cover.
   See P.7

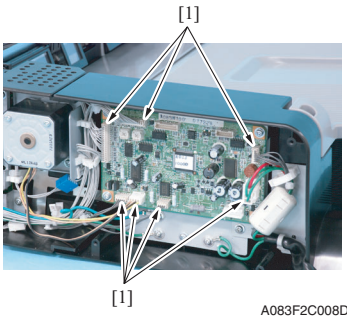

3. Disconnect all seven connectors [1] from the JS control board.

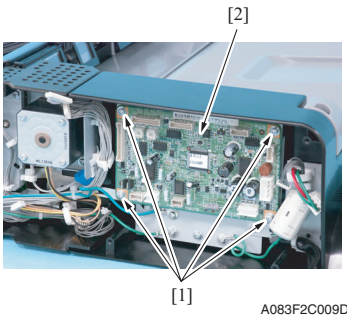

4. Remove four screws [1] and remove the JS control board [2].
5. Reinstall the above parts following the removal steps in reverse.

3.3.8 Transport motor (M1)

1. Remove the separator.
   See P.5
2. Remove the rear left cover.
   See P.7

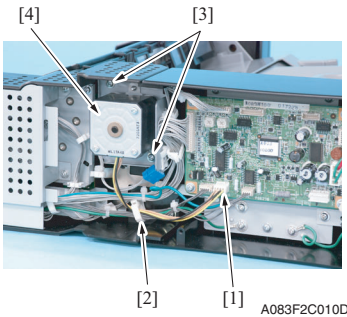

3. Disconnect the connector [1] and remove the wire saddle [2].
4. Remove two screws [3] and remove the transport motor assy [4].

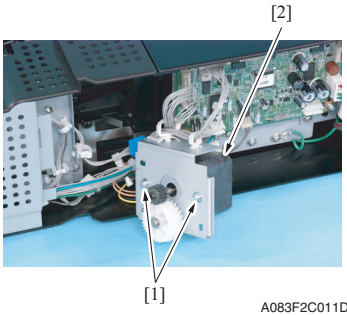

5. Remove two screws [1] and remove the transport motor [2].

6. Reinstall the above parts following the removal steps in reverse.

3.3.9 Route change motor (M3)

1. Remove the separator.
   See P.5
2. Remove the rear left cover.
   See P.7
3. Remove the rear right cover.
   See P.7

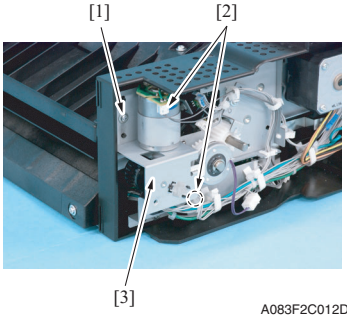

4. Remove the screw [1] and disconnect two connectors [2], and remove the route change motor assy [3].

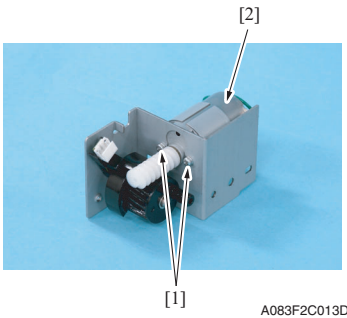

5. Remove two screws [1] and remove the route change motor [2].

6. Reinstall the above parts following the removal steps in reverse.

3.3.10 Shift motor (M2)

1. Remove the separator.
   See P.5
2. Remove the front cover.
   See P.6
3. Remove the route change motor.
   See P.10

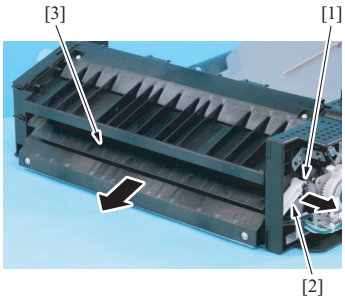

4. Remove the C-clip [1] and the lever [2], and remove the route change guide [3].

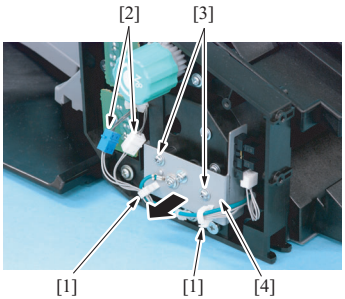

5. Remove two wire saddles [1], disconnect two connectors [2], and remove two screws [3]. Pull out the sensor assy [4] in the direction of the arrow.

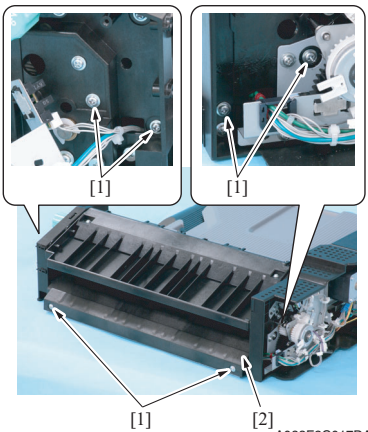

6. Remove six screws [1] and remove the transport guide/lower [2].

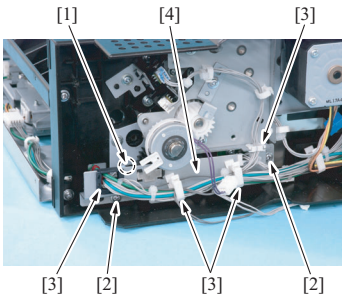

A083F2C018DA

7. Disconnect the connector [1], remove two screws [2], and remove the harness from four wire saddles [3]. Remove the sensor mounting plate assy [4].

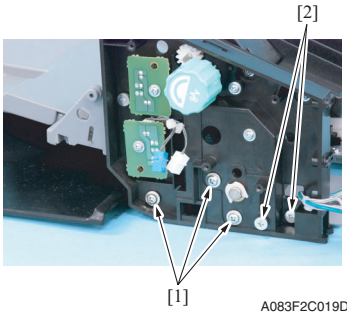

A083F2C019DA

8. Remove three screws [1] and two shoulder screws [2].

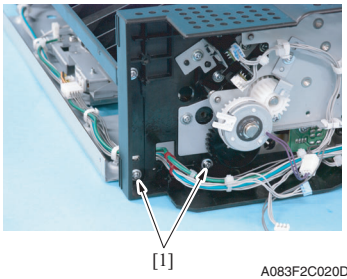

A083F2C020DA

9. Remove two screws [1].

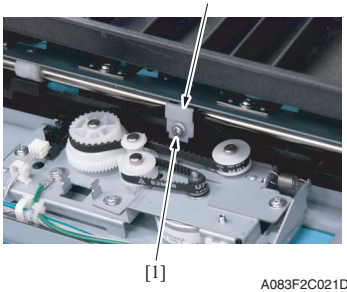

A083F2C021DA

10. Remove the screw [1] and remove the belt fixed plate [2].

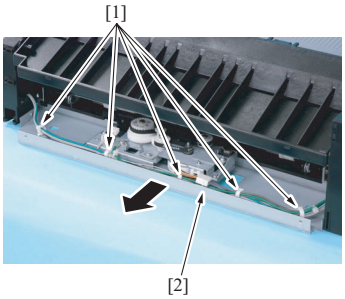

11. Remove five wire saddles [1] and pull out the shift drive section assy [2] in the direction of the arrow.

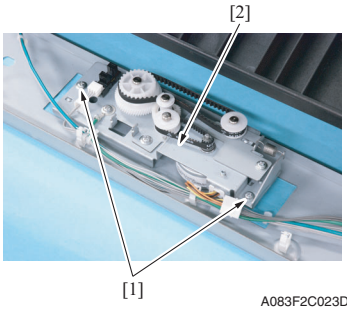

12. Remove two screws [1] and remove the shift motor assy [2].

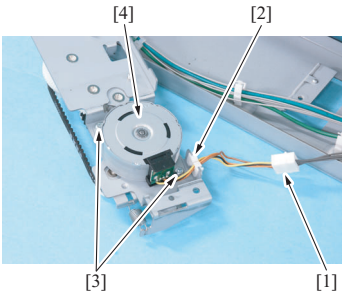

13. Disconnect the connector [1], remove wire saddle [2] and two screws [3], and remove the shift motor [4].

14. Reinstall the above parts following the removal steps in reverse.

3.3.11 Roller pressure/retraction clutch (CL1)

1. Remove the route change motor.
See P.10

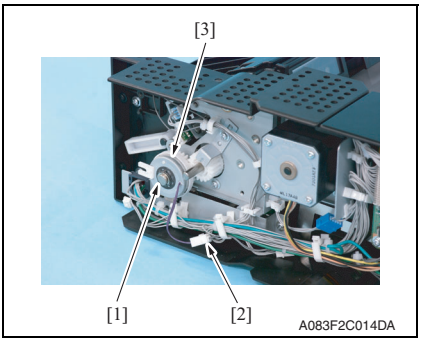

2. Remove the E-ring [1] and disconnect the connector [2], and remove the roller pressure/retraction clutch [3].

3. Reinstall the above parts following the removal steps in reverse.

KONICA MINOLTA

SERVICE MANUAL

FIELD SERVICE

FS-527

2010.04

KONICA MINOLTA BUSINESS TECHNOLOGIES, INC. Ver. 1.0

Revision history

After publication of this service manual, the parts and mechanism may be subject to change for improvement of their performance.
Therefore, the descriptions given in this service manual may not coincide with the actual machine.

When any change has been made to the descriptions in the service manual, a revised version will be issued with a revision mark added as required.

Revision mark:

- To indicate clearly a section revised, ⚠1 is shown at the left margin of the revised section.
  The number inside ⚠1 represents the number of times the revision has been made.

- To indicate clearly a page that contains the revision, ▲1 is shown near the page number of the corresponding page.
  The number inside ▲1 represents the number of times the revision has been made.

NOTE

Revision marks shown in a page are restricted only to the latest ones with the old ones deleted.

- When a page revised in Ver. 2.0 has been changed in Ver. 3.0:
  The revision marks for Ver. 3.0 only are shown with those for Ver. 2.0 deleted.
- When a page revised in Ver. 2.0 has not been changed in Ver. 3.0:
  The revision marks for Ver. 2.0 are left as they are.

2010/04	1.0	—	Issue of the first edition
Date	Service manual Ver.	Revision mark	Descriptions of revision

CONTENTS

FS-527

OUTLINE

1. PRODUCT SPECIFICATIONS 1

MAINTENANCE

2. PERIODICAL MAINTENANCE PROCEDURE 5
2.1 Paper exit section 5
2.1.1 Cleaning procedure for each parts 5
2.1.2 Replacing the upper paddles 6
2.1.3 Replacing the lower paddles 7
3. OTHER MAINTENANCE ITEM 9
3.1 Items not allowed to be disassembled and adjusted 9
3.2 Disassembly/reassembly parts list 10
3.3 Disassembly/reassembly procedure 11
3.3.1 Upper cover 11
3.3.2 Rear cover 11
3.3.3 Front door 12
3.3.4 Front upper cover 12
3.3.5 Front lower cover 13
3.3.6 Finisher 14
3.3.7 Horizontal transport unit 15
3.3.8 Stapler unit 16
3.3.9 FS control board (FSCB) 17
3.3.10 Paper passage motor/1 (M1) 18
3.3.11 Duplex path switching motor (M2) 19
3.3.12 Exit motor (M5) 20
3.3.13 Paper passage motor/2 (M3) 22
3.3.14 Conveyance motor (M4) 23
3.3.15 Upper lower path switching motor (M6) 25
3.3.16 Tray1 path switching motor (M8) 25
3.3.17 Exit roller retraction motor (M9) 26
3.3.18 Accommodation roller retraction motor (M10) 27
3.3.19 Stapler movement motor (M11) 27
3.3.20 Accommodation paddle motor (M12) 28

3.3.21 Elevate motor (M15) 29
3.3.22 Tray2 shift motor (M16) 30
3.3.23 Accommodation paddle solenoid (SD1) 31

OUTLINE

1. PRODUCT SPECIFICATIONS

A. Type

Name	Multi staple finisher
Type	Freestanding
Document alignment	Center
Consumables	Staples

B. Functions

Modes	Sort, group, offset, group offset, sort staple

C. Paper type
(1) Non sort/sort/group

Type	Size	Weight	Max. capacity		
Plain paper Recycled paper	A6S, A5S/A5, B5S/B5, B6S, A4S/A4, B4, A3, A3Wide 5 1/2 x 8 1/2S/5 1/2 x 8 1/2, 8 1/2 x 11S/8 1/2 x 11, 8 1/2 x 14, 11 x 17, 12 1/4 x 18	60 to 90 g/m² 16 to 24 lb	Exit tray1	200 sheets	
			Exit tray2	A4S, 8 1/2 x 11S or less	3,000 sheets
				B4, 8 1/2 x 14 or greater	1,500 sheets
				A5S, 5 1/2 x 8 1/2S or less	500 sheets
Envelope	Tray1 (Sub tray) Max. 311.15 mm x 1200 mm 12.25 x 47.24 inch Min. 90 mm x 139.7 mm 3.54 x 5.5 inch Tray2 (Main tray) Max. 311.15 mm x 457.2 mm 12.25 x 18 inch Min. 100 mm x 139.7 mm 3.94 x 5.5 inch	—	20 sheets		
OHP transparencies		—			
Label		—			
Letterhead		—			
Thick paper 1		91 to 150 g/m² 24.25 to 40 lb			
Thick paper 2		151 to 209 g/m² 40.25 to 55.5 lb			
Thick paper 3		210 to 256 g/m² 55.75 to 68 lb			
Thick paper 4		257 to 271 g/m² 68.25 to 72 lb			
Long size paper *	210 mm to 297 mm x 457.2 mm to 1200 mm	127 to 160 g/m² 33.75 to 42.5 lb	—		

*: Long size paper is available only for non-sort mode.

(2) Sort offset/group offset

Type	Size	Weight	Max. capacity		
Plain paper Recycled paper	A5, B5S/B5, A4S/A4, B4, A3, A3Wide 8 1/2 x 11S/8 1/2 x 11, 8 1/2 x 14, 11 x 17, 12 1/4 x 18 Max. 311.15 mm x 457.2 mm 12.25 x 18 inch Min. 182 mm x 148.5 mm 7.17 x 5.85 inch	60 to 90 g/m² 16 to 24 lb	Exit tray2	A4S, 8 1/2 x 11S or less	3,000 sheets *
				B4, 8 1/2 x 14 or greater	1,500 sheets
				A5	500 sheets
Thick paper		91 to 271 g/m² 24.25 to 72 lb	—		

*: 2,000 sheets when SD-509 is mounted

(3) Sort staple

Type	Size	Weight	No. of sheets to be stapled		Max. capacity		Max. No. of sheets to be stapled
					A4S, 8-1/2 X 11S or less	B4, 8-1/2 X 14 or greater	
Plain paper Recycled paper	A5, B5S/B5, A4S/A4, B4, A3 8 1/2 x 11S/8 1/2 x 11, 8 1/2 x 14, 11 x 17 Max. 297 mm x 431.8 mm 11.75 x 17 inch Min. 182 mm x 148.5 mm 7.25 x 5.75 inch	60 to 90 g/m² 16 to 24 lb	Exit tray2	2 to 9 sheets	100 copies	50 copies	50 sheets
				10 to 20 sheets	50 copies	50 copies	
				21 to 30 sheets	30 copies	30 copies	
				31 to 40 sheets	25 copies	25 copies	
				41 to 50 sheets	20 copies	20 copies	
Thick paper 1		91 to 209 g/m² 24.25 to 55.5 lb	—				30 sheets
Thick paper 2			—				15 sheets

D. Stapling

Staple filling mode	Dedicated staple cartridge (5000 staples)	
Stapling position	Back/Front of the corner (45 degree)	A4, A3 8 $^1/_2$ x 11, 11 x 17
	Back/Front of the corner (35 degree)	B5, B4
	Back/Front of the corner (Parallel)	A4S, B5S, A5 8 $^1/_2$ x 11S, 8 $^1/_2$ x 14
	Side: Parallel 2 point	A4S/A4, A3, B5S/B5, B4, A5 8 $^1/_2$ x 11S/8 $^1/_2$ x 11, 8 $^1/_2$ x 14, 11 x 17
Manual staple	None	

E. Machine specifications

Power requirements	DC 24 V ± 10 % (supplied from the main body)
Max. power consumption	56 W or less
Dimensions	528 (W) x 641 (D) x 1,025 (H) mm 20.79 (W) x 25.24 (D) x 40.35 (H) inch 658 (W) x 641 (D) x 1,087 (H) mm * 25.91 (W) x 25.24 (D) x 42.8 (H) inch *
Weight	42 kg (92.59 lb)

*: Size when the paper output tray is pulled out

F. Operating environment

- Conforms to the operating environment of the main body.

Blank Page

MAINTENANCE

2. PERIODICAL MAINTENANCE PROCEDURE

2.1 Paper exit section

NOTE

- **The alcohol described in the cleaning procedure of maintenance represents the isopropyl alcohol.**

2.1.1 Cleaning procedure for each parts

A. Periodically cleaning parts/cycle

- Each rollers/Each rolls: Every 300,000 counts
- Paddle: Every 300,000 counts

B. Cleaning point

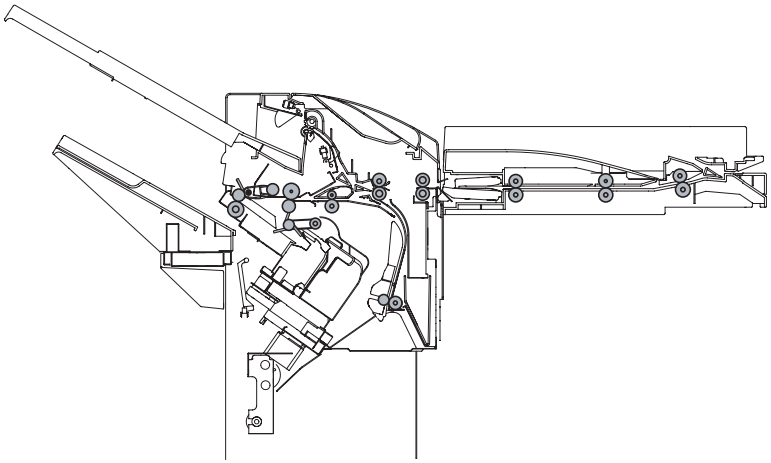

A0HRF2C511DA

2.1.2 Replacing the upper paddles

A. Periodically cleaning parts/cycle

- Upper paddles: Every 800,000 counts

B. Procedure

1. Open the front door of the finisher.

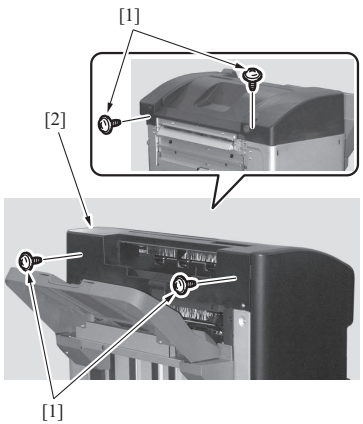

A0HRF2C503DA

2. Remove four screws [1], and remove the upper cover [2].

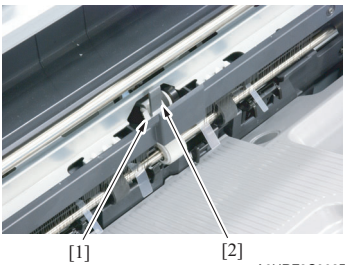

A0HRF2C002DA

3. Remove the C-clip [1], and remove the upper paddle assy [2].

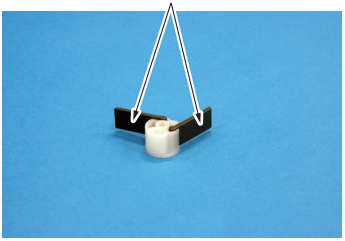

A0HRF2C003DA

4. Remove two paddles [1].

NOTE

- **When installing the paddles, use alcohol to moisten the surface of the paddles that are inserted into the grooves.**

5. Reinstall the above parts following the removal steps in reverse.

2.1.3 Replacing the lower paddles

A. Periodically cleaning parts/cycle

- Lower paddles: Every 800,000 counts

B. Procedure

1. Remove the finisher.
See P.14

2. Open the front door of the finisher.

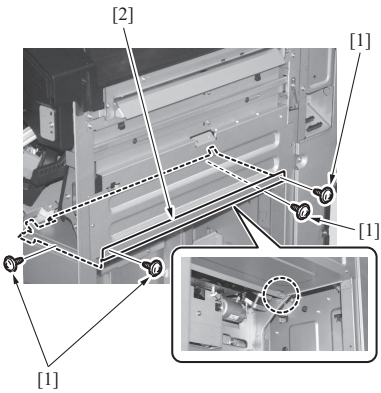

A0HRF2C504DA

NOTE

- **In case SD-509 is not mounted, remove the four screws [1] and take out the plate [2].**

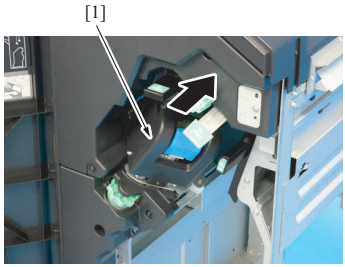

A0HRF2C004DA

3. Slide the stapler unit [1] backward.

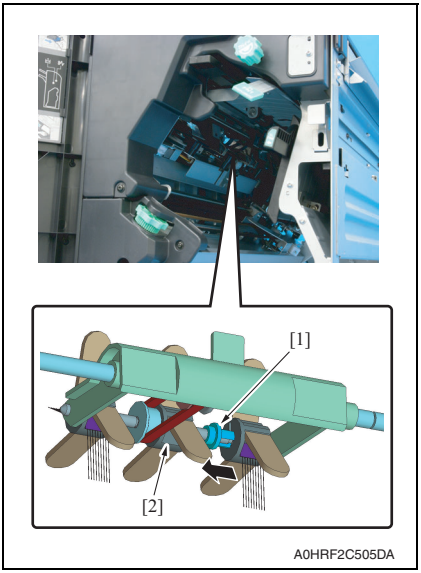

4. Move the stopper [1] forward, and release the lock.
5. Remove the lower paddle assy [2].

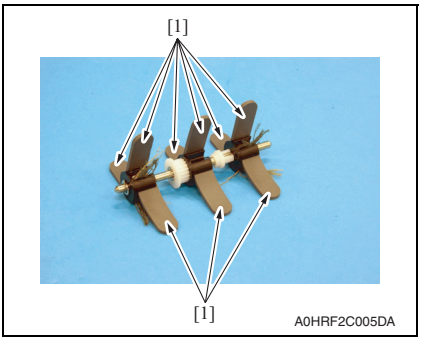

6. Remove nine paddles [1].

NOTE

- **When installing the paddles, use alcohol to moisten the surface of the paddles that are inserted into the grooves.**

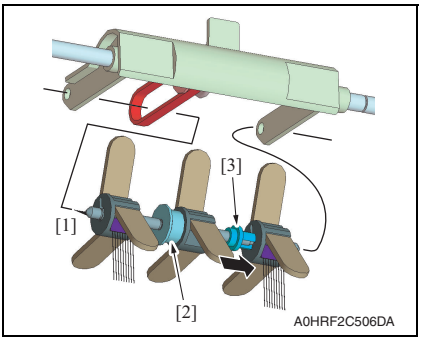

7. Put the front side of the lower paddle Assy [1] through the belt.
8. Attach the lower paddle Assy to the arm and put the belt on the gear [2].
9. Move the stopper [3] to secure.

10. Reinstall the above parts following the removal steps in reverse.

3. OTHER MAINTENANCE ITEM

3.1 Items not allowed to be disassembled and adjusted

A. Paint-locked screws

NOTE

- **To prevent loose screws, a screw lock in blue or green series color is applied to the screws.**
- **The screw lock is applied to the screws that may get loose due to the vibrations and loads created by the use of machine or due to the vibrations created during transportation.**
- **If the screw lock coated screws are loosened or removed, be sure to apply a screw lock after the screws are tightened.**

B. Red-painted screws

NOTE

- **The screws which are difficult to be adjusted in the field are painted in red in order to prevent them from being removed by mistake.**
- **Do not remove or loosen any of the red-painted screws in the field. It should also be noted that, when two or more screws are used for a single part, only one representative screw may be marked with the red paint.**

C. Variable resistors on board

NOTE

- **Do not turn the variable resistors on boards for which no adjusting instructions are given in Adjustment/Setting.**

D. Removal of PWBs

⚠ CAUTION

- **When removing a circuit board or other electrical component, refer to “Handling of PWBs” and follow the corresponding removal procedures.**
- **The removal procedures given in the following omit the removal of connectors and screws securing the circuit board support or circuit board.**
- **Where it is absolutely necessary to touch the ICs and other electrical components on the board, be sure to ground your body.**

3.2 Disassembly/reassembly parts list

Section	Part name	Ref. page
Exterior parts	Upper cover	P.11
	Rear cover	P.11
	Front door	P.12
	Front upper cover	P.12
	Front lower cover	P.13
Units	Finisher	P.14
	Horizontal transport unit	P.15
	Stapler unit	P.16
Other	FS control board (FSCB)	P.17
	Paper passage motor/1 (M1)	P.18
	Duplex path switching motor (M2)	P.19
	Paper passage motor/2 (M3)	P.22
	Conveyance motor (M4)	P.23
	Exit motor (M5)	P.20
	Upper lower path switching motor (M6)	P.25
	Tray1 path switching motor (M8)	P.25
	Exit roller retraction motor (M9)	P.26
	Accommodation roller retraction motor (M10)	P.27
	Stapler movement motor (M11)	P.27
	Accommodation paddle motor (M12)	P.28
	Elevate motor (M15)	P.29
	Tray2 shift motor (M16)	P.30
	Accommodation paddle solenoid (SD1)	P.31

3.3 Disassembly/reassembly procedure

3.3.1 Upper cover

1. Open the front door.

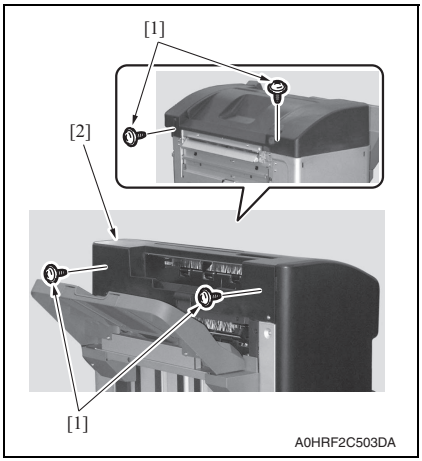

2. Remove four screws [1], and remove the upper cover [2].

3. Reinstall the above parts following the removal steps in reverse.

3.3.2 Rear cover

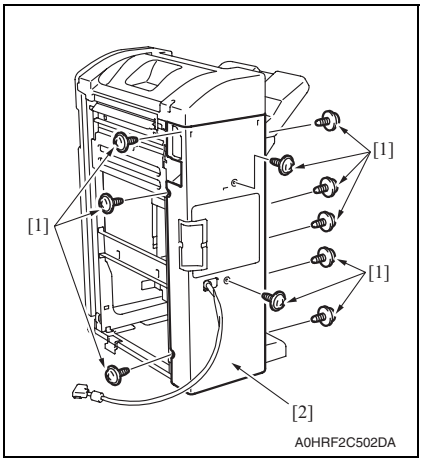

1. Remove ten screws [1], and remove the rear cover [2].

2. Reinstall the above parts following the removal steps in reverse.

3.3.3 Front door

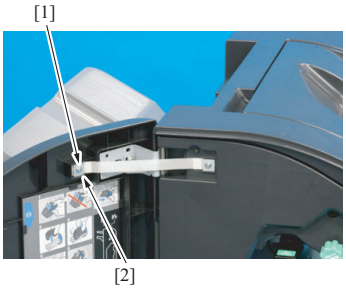

A0HRF2C006DA

1. Remove the screw [1] and the plate [2].

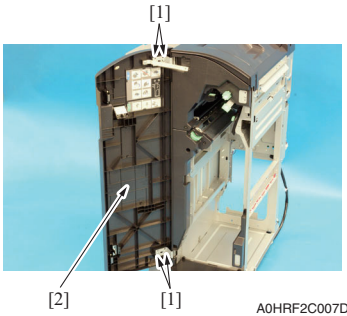

A0HRF2C007DA

2. Remove four screws [1], and remove the front door [2].

3. Reinstall the above parts following the removal steps in reverse.

3.3.4 Front upper cover

1. Remove the front door.
See P.12

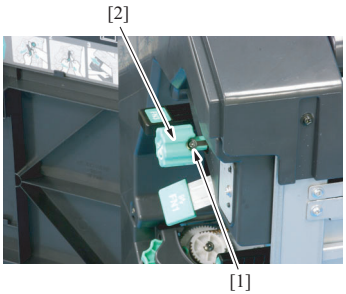

A0HRF2C008DA

2. Loosen the screw [1], and remove the dial (F2) [2].

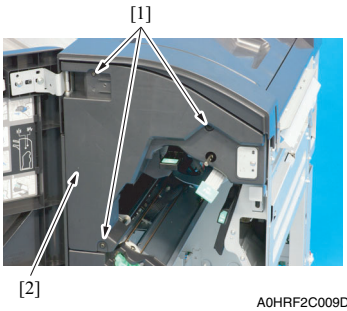

3. Remove three screws [1], and remove the front upper cover [2].

4. Reinstall the above parts following the removal steps in reverse.

3.3.5 Front lower cover

1. Remove the front door.
See P.12
2. Remove the front upper cover.
See P.12

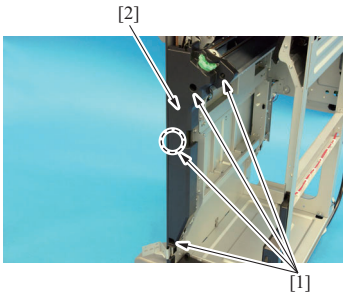

3. Remove four screws [1], and remove the front lower cover [2].

4. Reinstall the above parts following the removal steps in reverse.

3.3.6 Finisher

1. Open the front door.

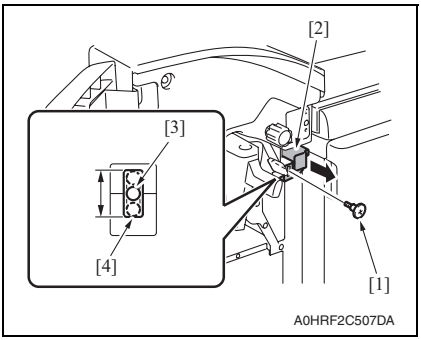

2. Remove the screw [1], and pull out the lever [2].

NOTE

- **At the time of the finisher installation, make sure that the screw hole [3] locates within the scope of the mounting hole of the lever [4].**

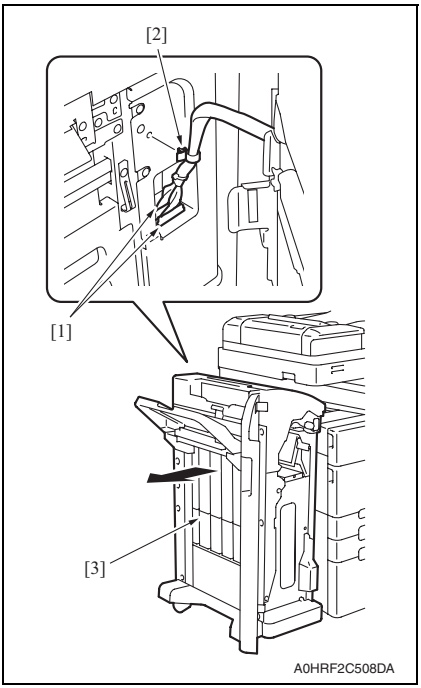

3. Disconnect two connectors [1].
4. Remove the cord clamp [2].
5. Remove the finisher [3] from the main body.

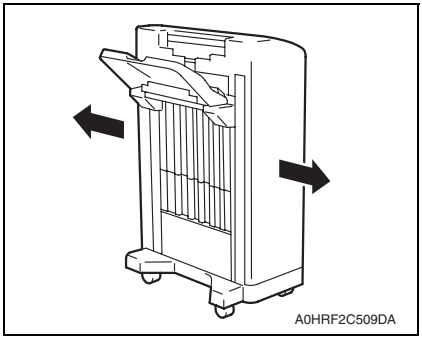

⚠ CAUTION

- **When transporting the finisher, make sure to push it to the direction as shown in the illustration. (to prevent turnover during transportation).**

6. Reinstall the above parts following the removal steps in reverse.

3.3.7 Horizontal transport unit

1. Remove the finisher from the main body.
See P.14

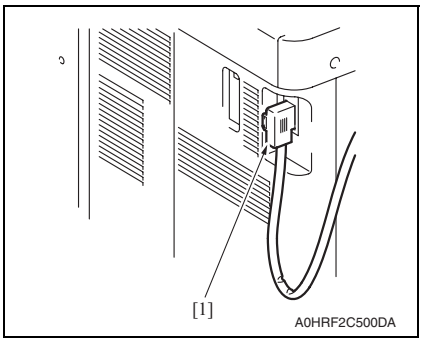

2. Remove the relay connector [1].

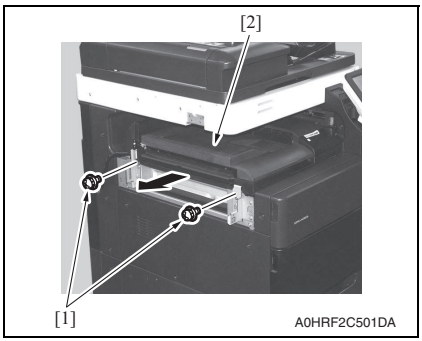

3. Remove two screws [1], and remove the horizontal transport unit [2].

4. Reinstall the above parts following the removal steps in reverse.

3.3.8 Stapler unit

1. Open the front door.

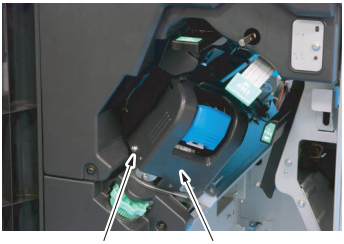

A0HRF2C011DA

2. Remove the screw [1], and remove the stapler unit cover [2].

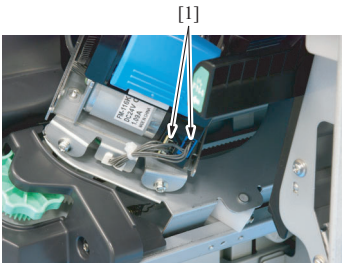

A0HRF2C012DA

3. Disconnect two connectors [1].

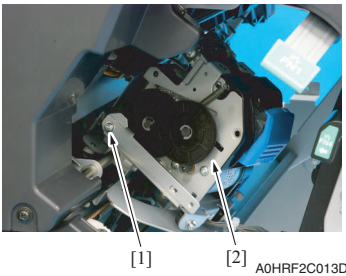

A0HRF2C013DA

4. Remove the screw [1], and remove the stapler unit [2].

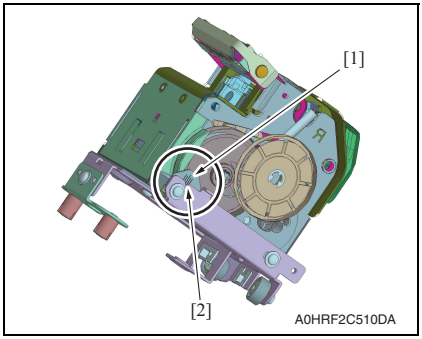

NOTE

- **When installing the staple unit, make sure to adjust the mark-off line [1] with the notch [2].**

5. Reinstall the above parts following the removal steps in reverse.

3.3.9 FS control board (FSCB)

1. Remove the finisher from the main body.
See P.14
2. Remove the rear cover.
See P.11

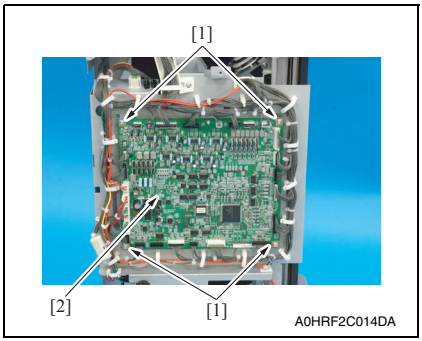

3. Remove all connectors from the FS control board.
4. Remove four screws [1], and remove the FS control board [2].

5. Reinstall the above parts following the removal steps in reverse.

3.3.10 Paper passage motor/1 (M1)

1. Remove the finisher from the main body.
   See P.14
2. Remove the horizontal transport unit.
   See P.15

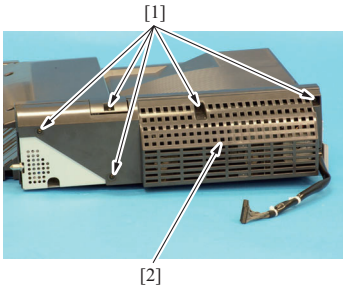

A0HRF2C015DA

3. Remove five screws [1], and remove the rear cover [2] of the horizontal transport unit.

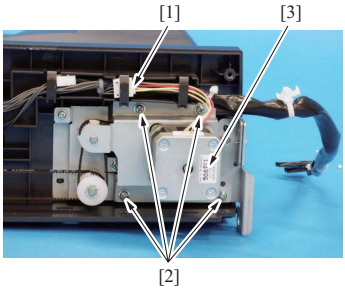

A0HRF2C016DA

4. Disconnect the connector [1].
5. Remove four screws [2], and remove the paper passage motor assy [3].

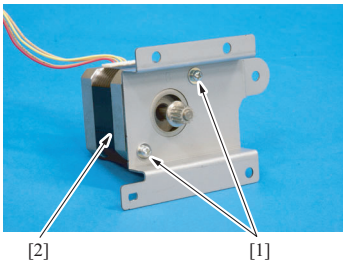

A0HRF2C017DA

6. Remove two screws [1], and remove the paper passage motor/1 [2].

7. Reinstall the above parts following the removal steps in reverse.

3.3.11 Duplex path switching motor (M2)

1. Remove the finisher from the main body.
See P.14

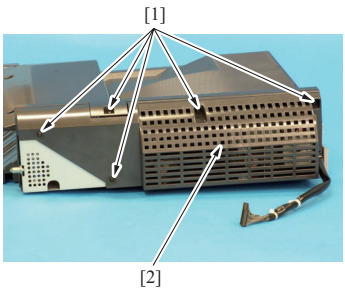

2. Remove five screws [1], and remove the rear cover [2] of the horizontal transport unit.

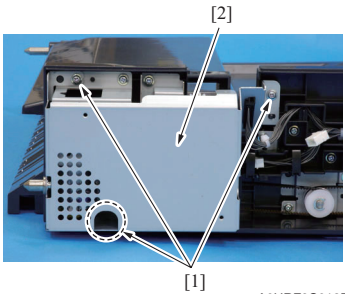

3. Remove three screws [1], and remove the plate [2].

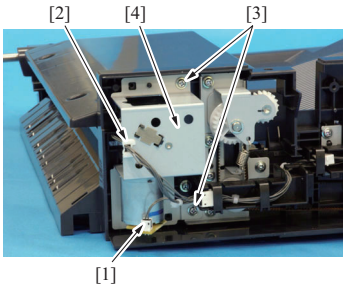

4. Disconnect the connector [1].
5. Remove the harness from the edge cover [2].
6. Remove two screws [3], and remove the duplex path switching motor assy [4].

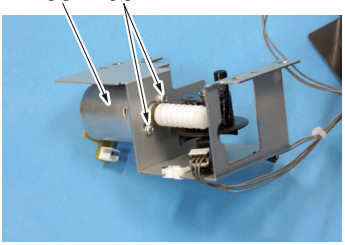

A0HRF2C020DA

7. Remove two screws [1], and remove the duplex path switching motor [2].

8. Reinstall the above parts following the removal steps in reverse.

3.3.12 Exit motor (M5)

1. Remove the finisher from the main body.
   See P.14
2. Remove the upper cover.
   See P.11
3. Remove the rear cover.
   See P.11
4. Remove the accommodation paddle motor.
   See P.28

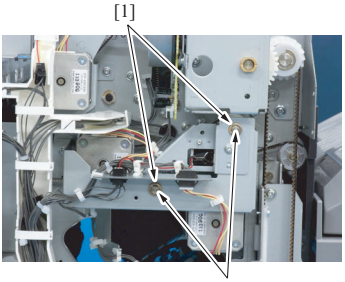

A0HRF2C021DA

5. Remove two E-rings [1] and two bushings [2].

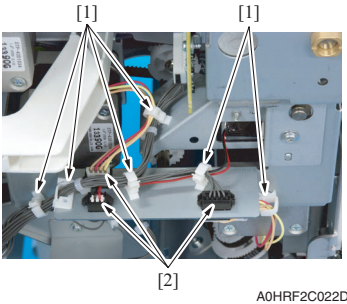

A0HRF2C022DA

6. Remove the harness from six wire saddles [1].
7. Disconnect three connectors [2].

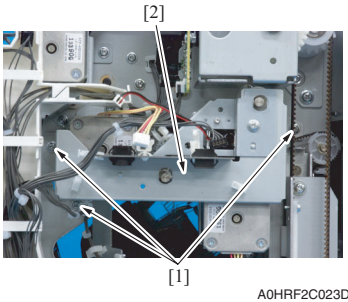

A0HRF2C023DA

8. Remove three screws [1], and remove the plate [2].

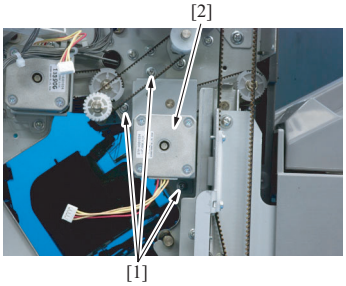

A0HRF2C024DA

9. Remove three screws [1], and remove the exit motor assy [2].

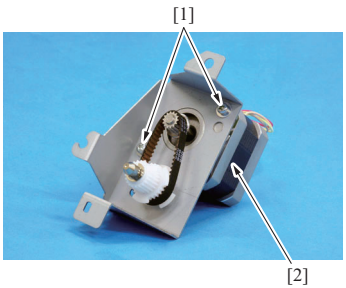

A0HRF2C025DA

10. Remove two screws [1], and remove the exit motor [2].

11. Reinstall the above parts following the removal steps in reverse.

3.3.13 Paper passage motor/2 (M3)

1. Remove the finisher from the main body.
   See P.14
2. Remove the upper cover.
   See P.11
3. Remove the rear cover.
   See P.11

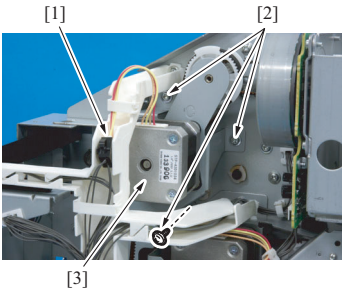

A0HRF2C026DA

4. Disconnect the connector [1].
5. Remove three screws [2], and remove the paper passage motor/2 assy [3].

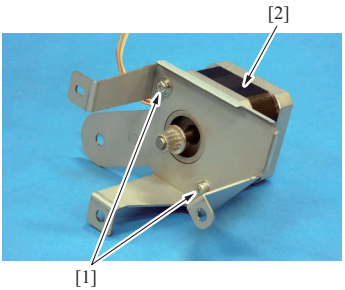

A0HRF2C027DA

6. Remove two screws [1], and remove the paper passage motor/2 [2].

7. Reinstall the above parts following the removal steps in reverse.

3.3.14 Conveyance motor (M4)

1. Remove the finisher from the main body.
   See P.14
2. Remove the upper cover.
   See P.11
3. Remove the rear cover.
   See P.11
4. Remove the accommodation paddle motor.
   See P.28

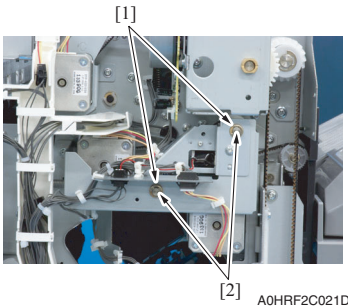

A0HRF2C021DA

5. Remove two E-rings [1] and two bushings [2].

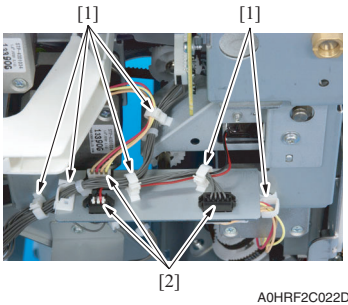

A0HRF2C022DA

6. Remove the harness from six wire saddles [1].
7. Disconnect three connectors [2].

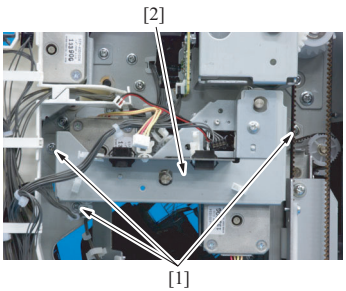

A0HRF2C023DA

8. Remove three screws [1], and remove the plate [2].

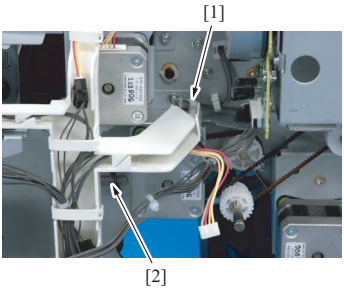

A0HRF2C028DA

9. Remove the harness from the wire saddles [1].
10. Remove the spring [2].

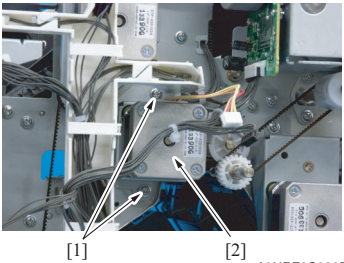

A0HRF2C029DA

11. Remove two screws [1], and remove the conveyance motor assy [2].

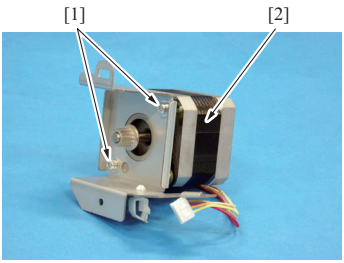

A0HRF2C030DA

12. Remove two screws [1], and remove the conveyance motor [2].

13. Reinstall the above parts following the removal steps in reverse.

3.3.15 Upper lower path switching motor (M6)

1. Remove the upper cover.
   See P.11
2. Remove the front upper cover.
   See P.12

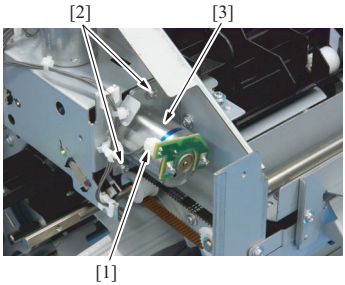

A0HRF2C031DA

3. Disconnect the connector [1].
4. Remove two screws [2], and remove the upper lower path switching motor [3].
5. Reinstall the above parts following the removal steps in reverse.

3.3.16 Tray1 path switching motor (M8)

1. Remove the upper cover.
   See P.11
2. Remove the front upper cover.
   See P.12

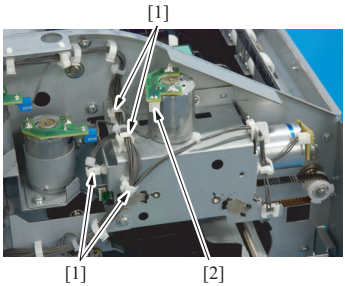

A0HRF2C032DA

3. Remove the harness from four wire saddles [1].
4. Disconnect the connector [2].

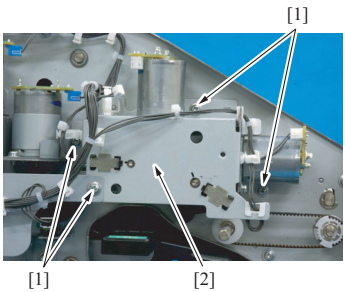

A0HRF2C033DA

5. Remove four screws [1], and remove the tray1 path switching motor assy [2].

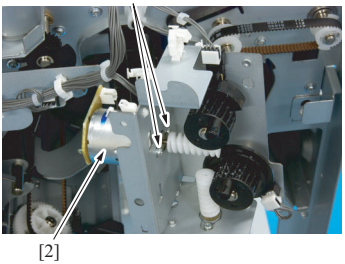

6. Remove two screws [1], and remove the tray1 path switching motor [2].

7. Reinstall the above parts following the removal steps in reverse.

3.3.17 Exit roller retraction motor (M9)

1. Remove the upper cover.
See P.11
2. Remove the front upper cover.
See P.12

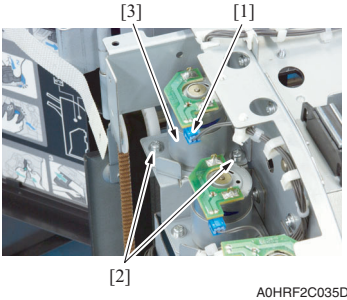

3. Disconnect the connector [1].
4. Remove two screws [1], and remove the exit roller retraction motor [2].

5. Reinstall the above parts following the removal steps in reverse.

3.3.18 Accommodation roller retraction motor (M10)

1. Remove the upper cover.
   See P.11
2. Remove the front upper cover.
   See P.12

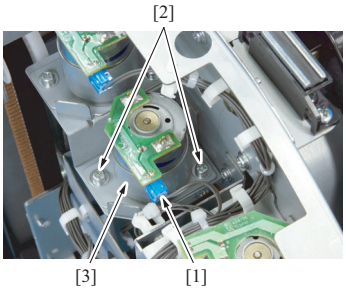

3. Disconnect the connector [1].
4. Remove two screws [2], and remove the accommodation roller retraction motor [3].
5. Reinstall the above parts following the removal steps in reverse.

3.3.19 Stapler movement motor (M11)

1. Remove the finisher from the main body.
   See P.14
2. Remove the upper cover.
   See P.11
3. Remove the rear cover.
   See P.11

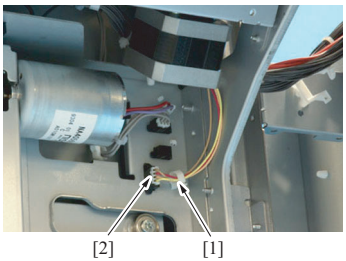

4. Remove the harness from four wire saddles [1].
5. Disconnect the connector [2].

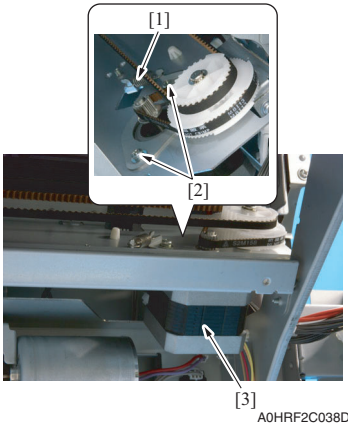

A0HRF2C038DA

6. Remove the spring [1].
7. Remove two screws [2], and remove the stapler movement motor [3].

8. Reinstall the above parts following the removal steps in reverse.

3.3.20 Accommodation paddle motor (M12)

1. Remove the finisher from the main body.
   See P.14
2. Remove the upper cover.
   See P.11
3. Remove the rear cover.
   See P.11

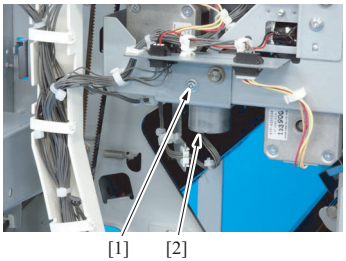

A0HRF2C039DA

4. Remove the screw [1].
5. Disconnect the connector [2].

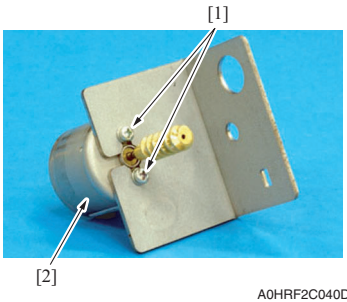

6. Remove two screws [1], and remove the accommodation paddle motor [2].

7. Reinstall the above parts following the removal steps in reverse.

3.3.21 Elevate motor (M15)

1. Remove the finisher from the main body.
See P.14
2. Remove the upper cover.
See P.11
3. Remove the rear cover.
See P.11

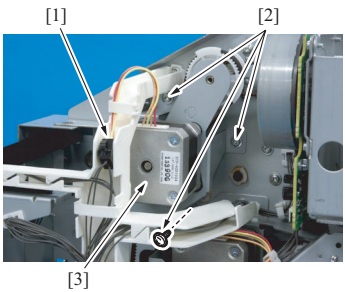

4. Disconnect the connector [1].
5. Remove three screws [2], and remove the elevate motor assy [3].

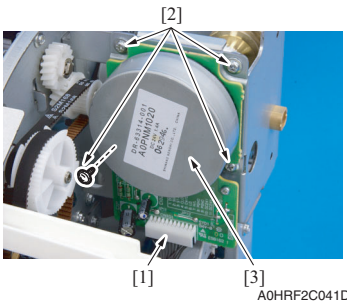

6. Disconnect the connector [1].
7. Remove four screws [2], and remove the elevate motor [3].

8. Reinstall the above parts following the removal steps in reverse.

3.3.22 Tray2 shift motor (M16)

1. Remove the finisher from the main body.
See P.14

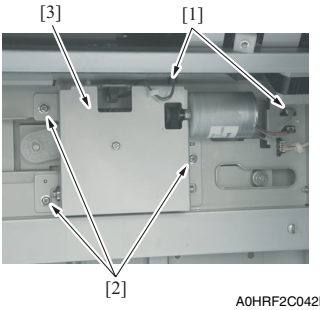

A0HRF2C042DA

2. Disconnect two connectors [1].
3. Remove three screws [2], and remove the tray2 shift motor assy [3].

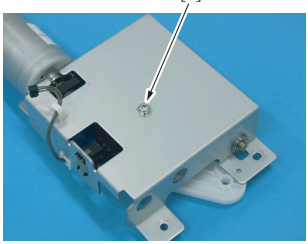

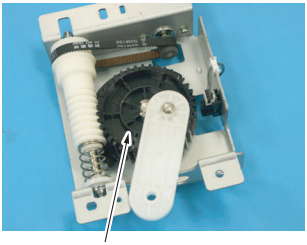

A0HRF2C512DA

4. Remove the screw [1], and remove the gear assy [2].

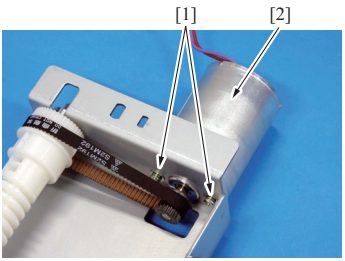

A0HRF2C043DA

5. Remove two screws [1], and remove the tray2 shift motor [2].
6. Reinstall the above parts following the removal steps in reverse.

3.3.23 Accommodation paddle solenoid (SD1)

1. Remove the finisher from the main body.
   See P.14
2. Remove the upper cover.
   See P.11
3. Remove the rear cover.
   See P.11

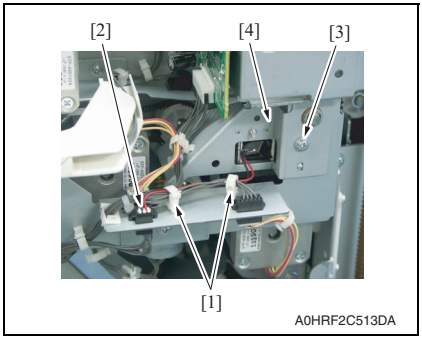

4. Remove the harness from two wire saddles [1].
5. Disconnect the connector [2].
6. Remove the screw [3], and remove the plate [4].

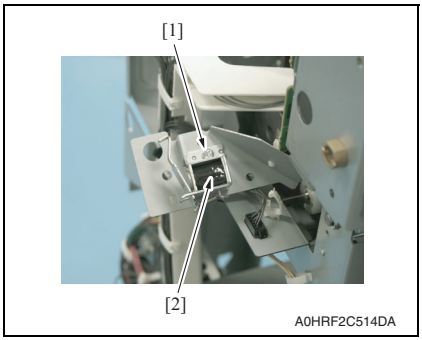

7. Remove the screw [1], and remove the accommodation paddle solenoid [2].

8. Reinstall the above parts following the removal steps in reverse.

Blank Page

KONICA MINOLTA

SERVICE MANUAL

FIELD SERVICE

PK-517

2010.04

KONICA MINOLTA BUSINESS TECHNOLOGIES, INC. Ver. 1.0

Revision history

After publication of this service manual, the parts and mechanism may be subject to change for improvement of their performance.
Therefore, the descriptions given in this service manual may not coincide with the actual machine.

When any change has been made to the descriptions in the service manual, a revised version will be issued with a revision mark added as required.

Revision mark:

- To indicate clearly a section revised, ⚠1 is shown at the left margin of the revised section.
  The number inside ⚠1 represents the number of times the revision has been made.

- To indicate clearly a page that contains the revision, ▲1 is shown near the page number of the corresponding page.
  The number inside ▲1 represents the number of times the revision has been made.

NOTE

Revision marks shown in a page are restricted only to the latest ones with the old ones deleted.

- When a page revised in Ver. 2.0 has been changed in Ver. 3.0:
  The revision marks for Ver. 3.0 only are shown with those for Ver. 2.0 deleted.
- When a page revised in Ver. 2.0 has not been changed in Ver. 3.0:
  The revision marks for Ver. 2.0 are left as they are.

2010/04	1.0	—	Issue of the first edition
Date	Service manual Ver.	Revision mark	Descriptions of revision

CONTENTS

PK-517

OUTLINE

1. PRODUCT SPECIFICATIONS 1

MAINTENANCE

2. PERIODICAL MAINTENANCE PROCEDURE 3
3. OTHER MAINTENANCE ITEM 4
3.1 Items not allowed to be disassembled and adjusted 4
3.2 Disassembly/reassembly parts list 5
3.3 Disassembly/reassembly procedure 5
3.3.1 Punch kit 5

ADJUSTMENT/SETTING

4. HOW TO USE THE ADJUSTMENT SECTION 7
5. MECHANICAL ADJUSTMENT 8
5.1 Mechanical adjustment of the punch section 8
5.1.1 Punch hole deviation correction 8

Blank Page

OUTLINE

1. PRODUCT SPECIFICATIONS

A. Type

Name	Punch kit
Type	FS-integrated type punching operation device

B. Functions

Punching method	Stops and punches every paper
No. of holes	2-3 holes / 4 holes / Sweden 4 holes
Hole diameter/pitch	2 holes / ϕ 8.0 mm / 70 mm pitch - 3 holes / ϕ 8.0 mm / 108 mm pitch 4 holes / ϕ 6.5 mm / 80 mm pitch Sweden 4 holes / ϕ 6.5 mm / 70 mm, 21 mm pitch
Supported mode	Punch mode
Applicable post processing mode	Sort, group, staple

C. Paper type

Size	2 hole punch setting: 11 x 17, 8-$^1/_2$ x 14, 8-$^1/_2$ x 11/8-$^1/_2$ x 11S 3 hole punch setting: 11 x 17, 8-$^1/_2$ x 11 4 hole punch setting: A3, B4, A4, B5 Sweden 4 hole punch setting: A3, B4, A4/A4S, B5
Supported paper	Plain paper, bond paper, thick paper 1/2/3 (Main unit specifications prioritized)
Weight	60 to 256 g/m^2
Punch prohibited paper	Label paper, tab paper, transparency film, 2nd base paper, holed paper, and the other paper that may interfere with the operation of the punch kit or the punch blade

D. Machine specifications

Power requirements	DC 24 V (supplied from the main body)
	DC 5 V (supplied from the main body)
Max. power consumption	30 W or less
Dimensions	58 mm (W) x 470 mm (D) x 135 mm (H) 2.28 inch (W) x 18.50 inch (D) x 5.31 inch (H)
Weight	1.8 kg (3.97 lb)

E. Operating environment

- Conforms to the operating environment of the main body.

NOTE

- **These specifications are subject to change without notice.**

Blank Page

MAINTENANCE

2. PERIODICAL MAINTENANCE PROCEDURE

- Periodically replaced parts are not employed.

3. OTHER MAINTENANCE ITEM

3.1 Items not allowed to be disassembled and adjusted

A. Paint-locked screws

NOTE

- **To prevent loose screws, a screw lock in blue or green series color is applied to the screws.**
- **The screw lock is applied to the screws that may get loose due to the vibrations and loads created by the use of machine or due to the vibrations created during transportation.**
- **If the screw lock coated screws are loosened or removed, be sure to apply a screw lock after the screws are tightened.**

B. Red-painted screws

NOTE

- **The screws which are difficult to be adjusted in the field are painted in red in order to prevent them from being removed by mistake.**
- **Do not remove or loosen any of the red-painted screws in the field. It should also be noted that, when two or more screws are used for a single part, only one representative screw may be marked with the red paint.**

C. Variable resistors on board

NOTE

- **Do not turn the variable resistors on boards for which no adjusting instructions are given in Adjustment/Setting.**

D. Removal of PWBs

⚠ CAUTION

- **When removing a circuit board or other electrical component, refer to “Handling of PWBs” and follow the corresponding removal procedures.**
- **The removal procedures given in the following omit the removal of connectors and screws securing the circuit board support or circuit board.**
- **Where it is absolutely necessary to touch the ICs and other electrical components on the board, be sure to ground your body.**

3.2 Disassembly/reassembly parts list

Section	Part name	Ref. page
Unit	Punch kit	P.5

3.3 Disassembly/reassembly procedure

3.3.1 Punch kit

1. Remove the finisher from the main body.

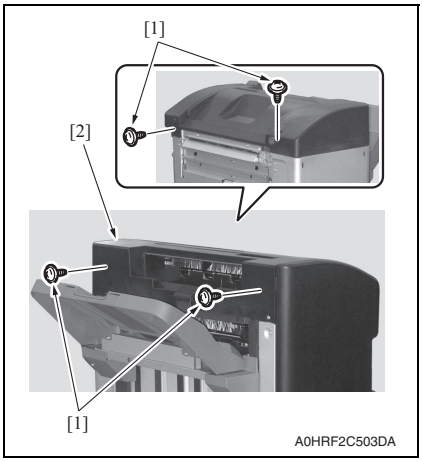

2. Remove four screws [1], and remove the finisher upper cover [2].

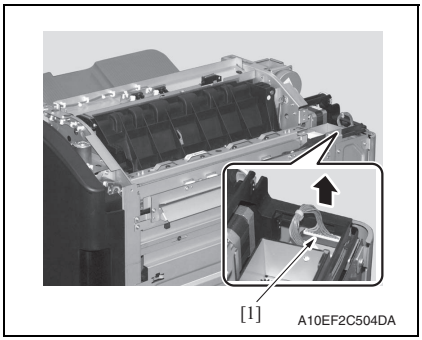

3. Disconnect the connector [1].

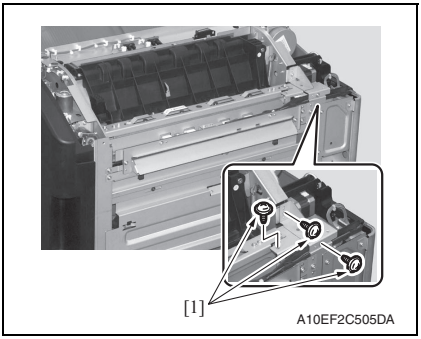

4. Remove three screws [1].

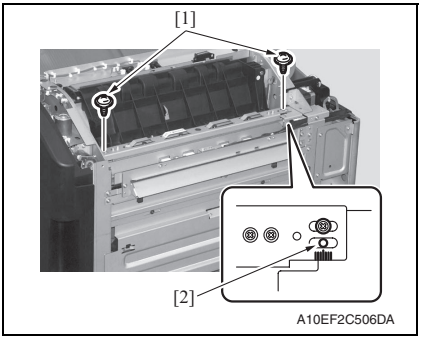

5. Remove two screws [1].

NOTE

- **At the time of installation, secure it by adjusting the plate dowel [2] to the center of the stamp mark.**

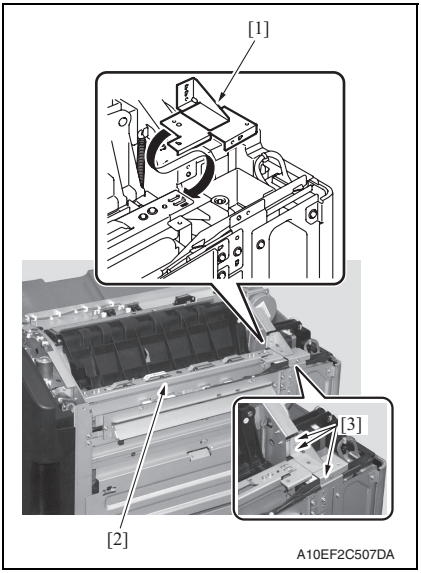

6. Remove the plate [1], and remove the punch kit [2].

NOTE

- **At the time of installation, align the position of the three dowel holes of the plate [3].**

7. Reinstall the above parts following the removal steps in reverse.

ADJUSTMENT/SETTING

4. HOW TO USE THE ADJUSTMENT SECTION

- “Adjustment/Setting” contains detailed information on the adjustment items and procedures for this machine.
- Throughout this “Adjustment/Setting,” the default settings are indicated by “ ”.

Advance checks

Before attempting to solve the customer problem, the following advance checks must be made. Check to see if:

- The power supply voltage meets the specifications.
- The power supply is properly grounded.
- The machine shares the power supply with any other machine that draws large current intermittently (e.g., elevator and air conditioner that generate electric noise).
- The installation site is environmentally appropriate: high temperature, high humidity, direct sunlight, ventilation, etc.; levelness of the installation site.
- The original has a problem that may cause a defective image.
- The density is properly selected.
- The original glass, slit glass, or related part is dirty.
- Correct paper is being used for printing.
- The units, parts, and supplies used for printing (developer, PC drum, etc.) are properly replenished and replaced when they reach the end of their useful service life.
- Toner is not running out.

⚠ CAUTION

- **Be sure to unplug the power cord of the machine before starting the service job procedures.**
- **If it is unavoidably necessary to service the machine with its power turned ON, use utmost care not to be caught in the scanner cables or gears of the exposure unit.**
- **Special care should be used when handling the fusing unit which can be extremely hot.**
- **The developing unit has a strong magnetic field. Keep watches and measuring instruments away from it.**
- **Take care not to damage the PC drum with a tool or similar device.**
- **Do not touch IC pins with bare hands.**

5. MECHANICAL ADJUSTMENT

5.1 Mechanical adjustment of the punch section

5.1.1 Punch hole deviation correction

- **This adjustment must be made in the following case:**
  The punch holes are on a slanted line.

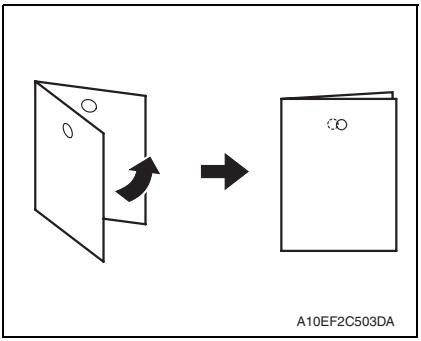

1. Set the mode to Punch mode for printing.
2. Hold the output paper half and check the displacement of the punch hole.
   Standard value: 0 ± 2.0 mm

3. In case the figure exceeds the above mentioned standard value, follow the procedures shown below.

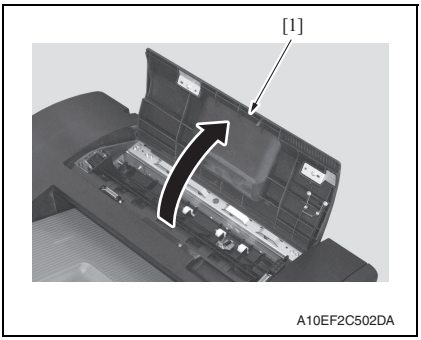

4. Open the upper cover [1].

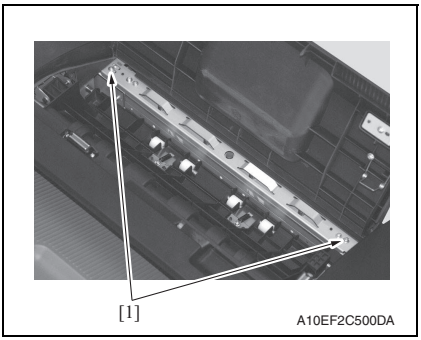

- Loosen two screws [1].

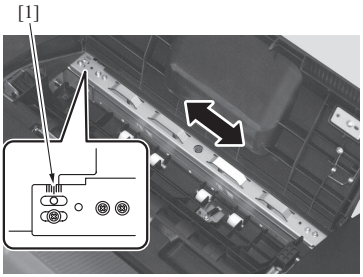

A10EF2C501DA

- Move the punch unit forward or backward for adjustment referring the mark-off line [1].

Blank Page

KONICA MINOLTA

SERVICE MANUAL

FIELD SERVICE

SD-509

2010.04

KONICA MINOLTA BUSINESS TECHNOLOGIES, INC. Ver. 2.0

Revision history

After publication of this service manual, the parts and mechanism may be subject to change for improvement of their performance.
Therefore, the descriptions given in this service manual may not coincide with the actual machine.

When any change has been made to the descriptions in the service manual, a revised version will be issued with a revision mark added as required.

Revision mark:

- To indicate clearly a section revised, ⚠1 is shown at the left margin of the revised section.
  The number inside ⚠1 represents the number of times the revision has been made.

- To indicate clearly a page that contains the revision, ▲1 is shown near the page number of the corresponding page.
  The number inside ▲1 represents the number of times the revision has been made.

NOTE

Revision marks shown in a page are restricted only to the latest ones with the old ones deleted.

- When a page revised in Ver. 2.0 has been changed in Ver. 3.0:
  The revision marks for Ver. 3.0 only are shown with those for Ver. 2.0 deleted.
- When a page revised in Ver. 2.0 has not been changed in Ver. 3.0:
  The revision marks for Ver. 2.0 are left as they are.

2010/04	1.0	—	Issue of the first edition
Date	Service manual Ver.	Revision mark	Descriptions of revision

CONTENTS

SD-509

OUTLINE

1. PRODUCT SPECIFICATIONS 1

MAINTENANCE

2. PERIODICAL MAINTENANCE PROCEDURE 3
3. OTHER MAINTENANCE ITEM 4
3.1 Items not allowed to be disassembled and adjusted 4
3.2 Disassembly/reassembly parts list 5
3.3 Disassembly/reassembly procedure 5
3.3.1 Front cover 5
3.3.2 Right cover 6
3.3.3 Staple unit cover 6
3.3.4 Saddle unit 7
3.3.5 Paper exit tray 10
3.3.6 Staple unit 11
3.3.7 SD drive board (SDDB) 12
3.3.8 Leading edge stopper motor (M20) 13
3.3.9 Upper paddle motor (M21) 14
3.3.10 Lower paddle motor (M22) 15
3.3.11 Center staple alignment motor/R (M23) 16
3.3.12 Center staple alignment motor/F (M24) 17
3.3.13 Center fold roller motor (M25) 18
3.3.14 Center fold plate motor (M26) 18
3.3.15 Leading edge grip solenoid (SD3) 19

ADJUSTMENT/SETTING

4. HOW TO USE THE ADJUSTMENT SECTION 21
5. MECHANICAL ADJUSTMENT 22
5.1 Mechanical adjustment of the paper exit section 22
5.1.1 Half-fold skew adjustment 22

Blank Page

OUTLINE

1. PRODUCT SPECIFICATIONS

A. Type

Name	Saddle sticher SD-509
Type	Built into the finisher
Installation	Screwed to the finisher
Document alignment	Center
Stapling function	Center parallel two points

B. Paper

(1) Saddle stitching

Type	Plain paper, Thick paper 1, Thick paper 2
Size	A3, B4, A4S, A3 Wide, 11 x 17, 8-$^1/_2$ x 14, 8-$^1/_2$ x 11S Min: 210 mm x 279.4 mm, 8.27 inch X 11 inch Max: 311.15 mm x 457.2 mm, 12.25 inch X 18 inch
Max. saddle stitching capacity	15 sheets (60 g/m^2 to 90 g/m^2 , 16 to 24 lb)
	14 sheets (60 g/m^2 to 90 g/m^2 , 16 to 24 lb) + 1 sheet (60 g/m^2 to 209 g/m^2 , 16 to 55.5 lb)

(2) Folding

Type	Plain paper
Size	A3, B4, A4S, A3 Wide, 11 x 17, 8-$^1/_2$ x 14, 8-$^1/_2$ x 11S Min: 210 mm x 279.4 mm, 8.27 inch X 11 inch Max: 311.15 mm x 457.2 mm, 12.25 inch X 18 inch
Max. number of sheets folded together	3 sheets (60 g/m^2 to 90 g/m^2 , 16 to 24 lb)

C. Machine specifications

Dimensions	239 mm (W) x 579 mm (D) x 534 mm (H) 9.41 inch (W) x 22.80 inch (D) x 21.02 inch (H)
Weight	24 kg (52.91 lb)

D. Operating environment

- Conforms to the operating environment of the main body.

E. Consumables

- Staples 5,000 (SK-602: Staple kit)

NOTE

- **These specifications are subject to change without notice.**

Blank Page

MAINTENANCE

2. PERIODICAL MAINTENANCE PROCEDURE

- Periodically replaced parts are not employed.

3. OTHER MAINTENANCE ITEM

3.1 Items not allowed to be disassembled and adjusted

A. Paint-locked screws

NOTE

- **To prevent loose screws, a screw lock in blue or green series color is applied to the screws.**
- **The screw lock is applied to the screws that may get loose due to the vibrations and loads created by the use of machine or due to the vibrations created during transportation.**
- **If the screw lock coated screws are loosened or removed, be sure to apply a screw lock after the screws are tightened.**

B. Red-painted screws

NOTE

- **The screws which are difficult to be adjusted in the field are painted in red in order to prevent them from being removed by mistake.**
- **Do not remove or loosen any of the red-painted screws in the field. It should also be noted that, when two or more screws are used for a single part, only one representative screw may be marked with the red paint.**

C. Variable resistors on board

NOTE

- **Do not turn the variable resistors on boards for which no adjusting instructions are given in Adjustment/Setting.**

D. Removal of PWBs

⚠ CAUTION

- **When removing a circuit board or other electrical component, refer to “Handling of PWBs” and follow the corresponding removal procedures.**
- **The removal procedures given in the following omit the removal of connectors and screws securing the circuit board support or circuit board.**
- **Where it is absolutely necessary to touch the ICs and other electrical components on the board, be sure to ground your body.**

3.2 Disassembly/reassembly parts list

Section	Part name	Ref. page
Exterior parts	Front cover	P.5
	Right cover	P.6
	Staple unit cover	P.6
Units	Saddle unit	P.7
	Paper exit tray	P.10
	Staple unit	P.11
Board and etc.	SD drive board (SDDB)	P.12
	Leading edge stopper motor (M20)	P.13
	Upper paddle motor (M21)	P.14
	Lower paddle motor (M22)	P.15
	Center staple alignment motor/R (M23)	P.16
	Center staple alignment motor/F (M24)	P.17
	Center fold roller motor (M25)	P.18
	Center fold plate motor (M26)	P.18
	Leading edge grip solenoid (SD3)	P.19

3.3 Disassembly/reassembly procedure

3.3.1 Front cover

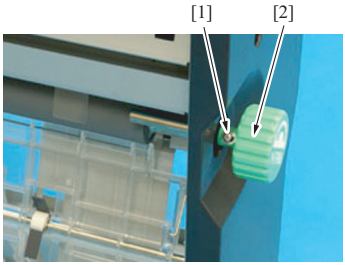

A10DF2C001DA

1. Remove the screw [1], and remove the jam clearing dial [2].

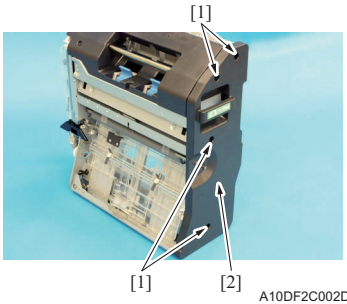

A10DF2C002DA

2. Remove four screws [1], and remove the front cover [2].
3. Reinstall the above parts following the removal steps in reverse.

3.3.2 Right cover

1. Remove the saddle unit.
   See P.7

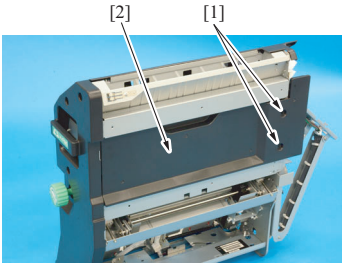

A10DF2C003DA

2. Remove two screws [1], and remove the right cover [2].
3. Reinstall the above parts following the removal steps in reverse.

3.3.3 Staple unit cover

1. Remove the saddle unit.
   See P.7
2. Remove the front cover.
   See P.5

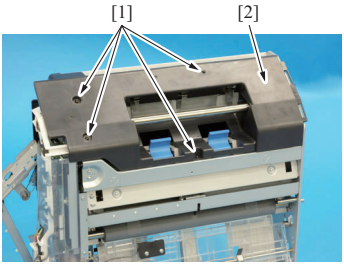

A10DF2C004DA

3. Remove four screws [1], and remove the staple unit cover [2].
4. Reinstall the above parts following the removal steps in reverse.

3.3.4 Saddle unit

⚠ CAUTION

- **Be careful not to catch your finger in the edge of the rail when mounting the saddle unit on the right rail for the saddle unit installation.**
- **Be careful not to jam your finger in the connecting section of the panto-graph.**

1. Remove the finisher.
See P.14 of the FS-527 service manual.

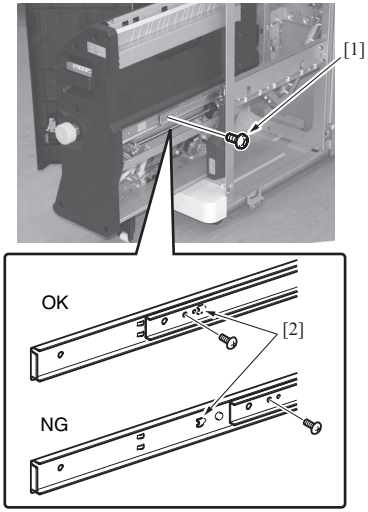

A10DF2C501DA

2. Open the front door of the finisher.
3. Pull out the saddle unit.
4. Remove the screw [1].

NOTE

- **For installation of the saddle unit, install the screw after confirming that the protruding portion of the rail [2] locates behind the screw hole.**

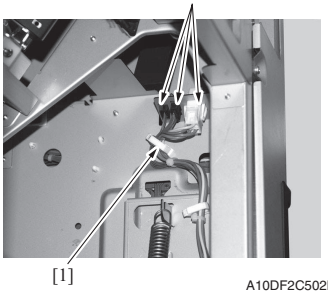

A10DF2C502DA

5. Remove the harness from the wire saddle [1].
6. Disconnect three connectors [2].

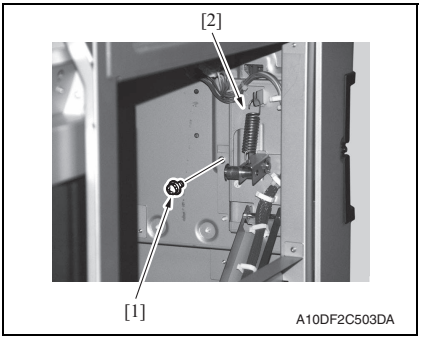

7. Remove the screw [1], and remove the pantograph [2].

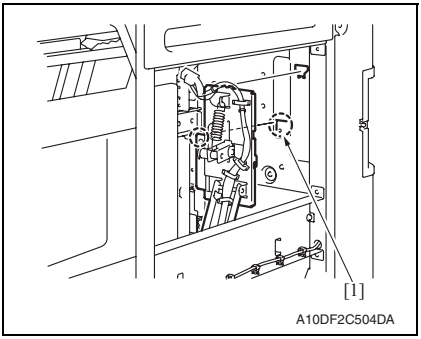

NOTE

- **For installation of the pantograph, insert two hooks on the pantograph of the saddle unit into the back holes inside the finisher referring the punch mark [1].**

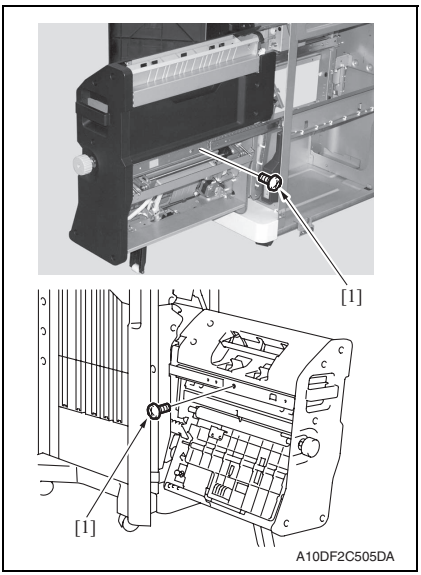

8. Remove two screws [1].

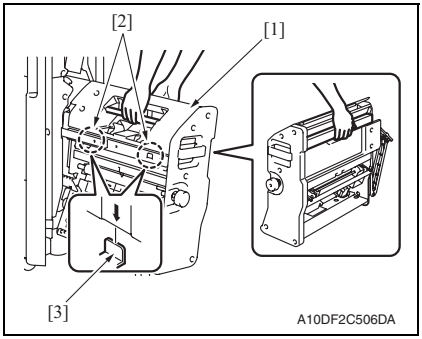

9. Grip the portion as shown in the illustration [1] to raise the saddle unit and take it out.

NOTE

- **For installation of the saddle unit, insert two hooks on the left rail [3] into the two holes of the saddle unit [2].**

10. Reinstall the above parts following the removal steps in reverse.

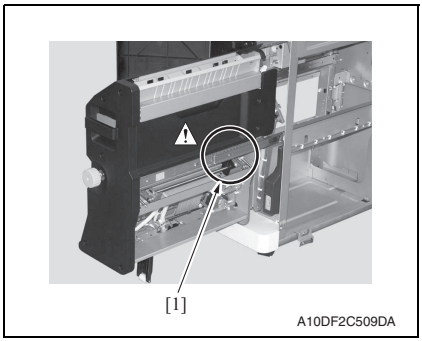

⚠ **CAUTION**

- **Be careful not to catch your finger in the edge of the rail [1] when mounting the saddle unit on the right rail for the saddle unit installation.**

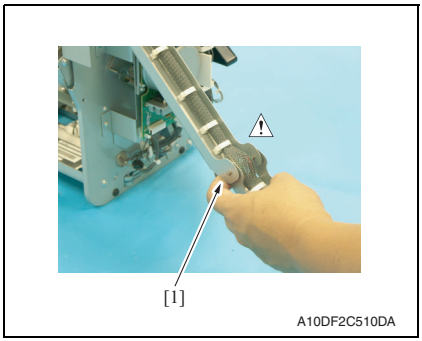

⚠ **CAUTION**

- **Be careful not to jam your finger in the connecting section of the pantograph [1].**

3.3.5 Paper exit tray

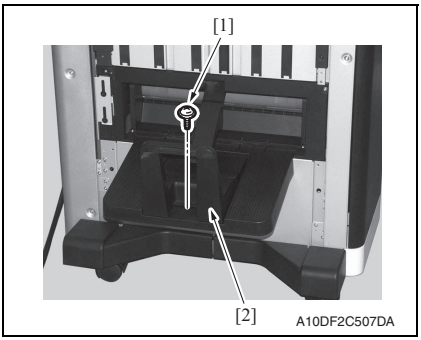

1. Remove the screw [1], and unlock the stopper [2].

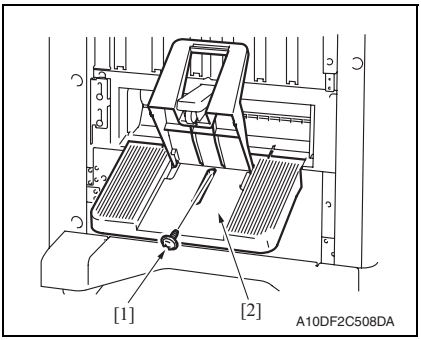

2. Remove the screw [1], and remove the paper exit tray [2].

3. Reinstall the above parts following the removal steps in reverse.

3.3.6 Staple unit

1. Remove the front cover.
   See P.5
2. Remove the staple unit cover.
   See P.6

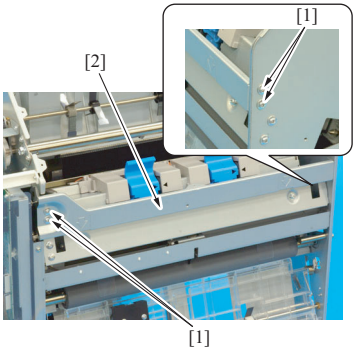

A10DF2C005DA

3. Remove four screws [1], and remove the plate [2].

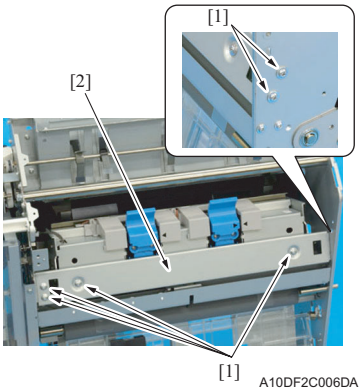

A10DF2C006DA

4. Remove six screws [1], and remove the plate [2].

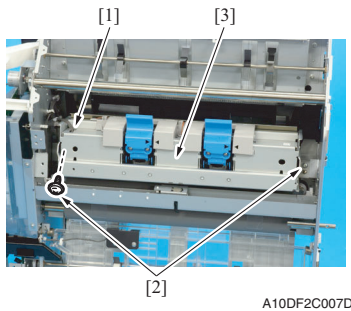

5. Disconnect the connector [1].
6. Remove two screws [2], and remove the staple unit [3].

7. Reinstall the above parts following the removal steps in reverse.

3.3.7 SD drive board (SDDB)

1. Remove the saddle unit.
   See P.7
2. Remove the front cover.
   See P.5
3. Remove the staple unit cover.
   See P.6

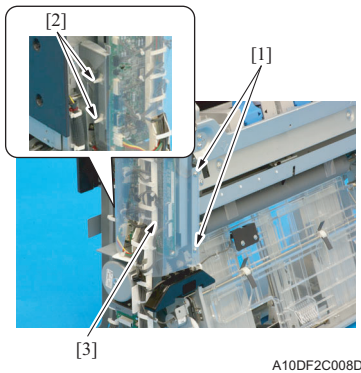

4. Remove two screws [1].
5. Remove the board support film [3] from two spacer [2].

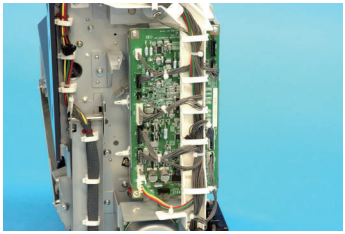

A10DF2C009DA

6. Disconnect all the twelve connectors from the SD drive board.

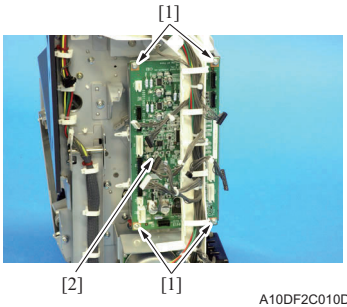

A10DF2C010DA

7. Remove four screws [1], and remove the SD drive board [2].

8. Reinstall the above parts following the removal steps in reverse.

3.3.8 Leading edge stopper motor (M20)

1. Remove the saddle unit.
See P.7

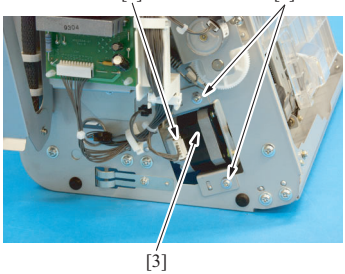

A10DF2C011DA

2. Disconnect the connector [1].
3. Remove two screws [2], and remove the leading edge stopper motor assy [3].

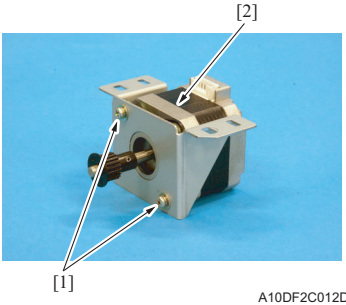

4. Remove two screws [1], and remove the leading edge stopper motor [2].

5. Reinstall the above parts following the removal steps in reverse.

3.3.9 Upper paddle motor (M21)

1. Remove the saddle unit.
See P.7

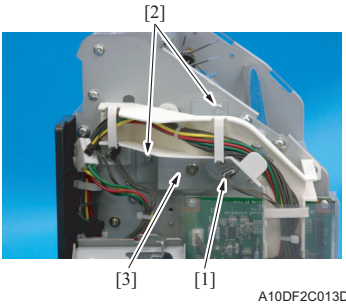

2. Disconnect the connector [1].
3. Remove two screws [2], and remove the upper paddle motor assy [3].

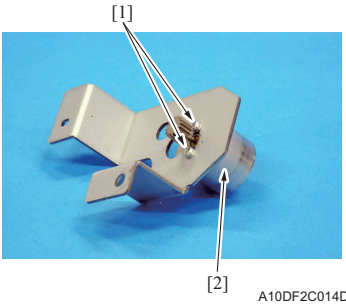

4. Remove two screws [1], and remove the upper paddle motor [2].

5. Reinstall the above parts following the removal steps in reverse.

3.3.10 Lower paddle motor (M22)

1. Remove the saddle unit.
See P.7

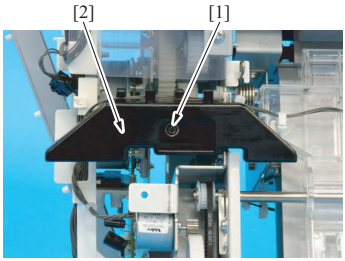

A10DF2C015DA

2. Remove the screw [1], and remove the paper exit tray guide [2].

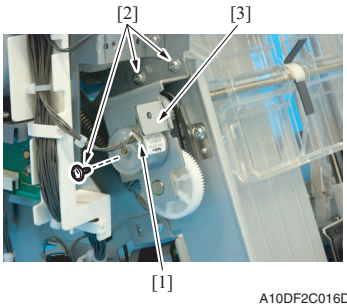

A10DF2C016DA

3. Disconnect the connector [1].
4. Remove three screws [2], and remove the lower paddle motor assy [3].

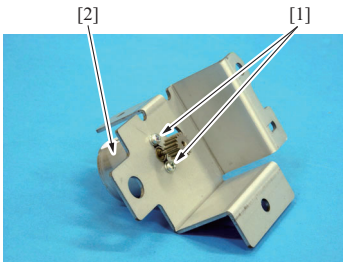

A10DF2C017DA

5. Remove two screws [1], and remove the lower paddle motor [2].

6. Reinstall the above parts following the removal steps in reverse.

3.3.11 Center staple alignment motor/R (M23)

1. Remove the saddle unit.
   See P.7
2. Remove the right cover.
   See P.6

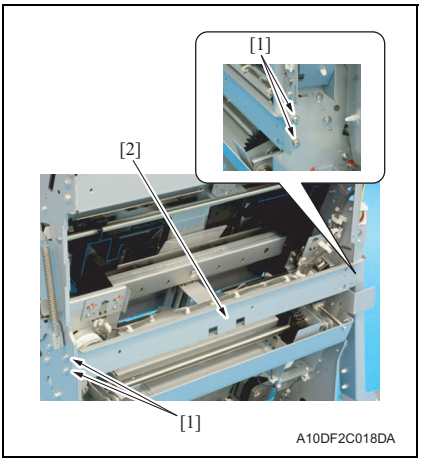

3. Remove four screws [1], and remove the plate [2].

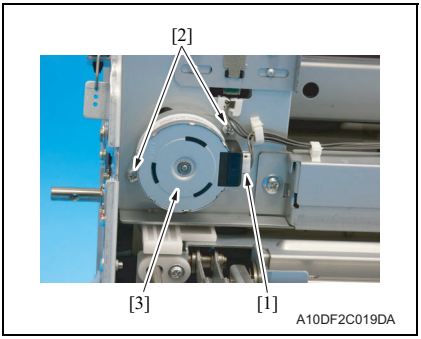

4. Disconnect the connector [1].
5. Remove two screws [2], and remove the center staple alignment motor/R [3].

6. Reinstall the above parts following the removal steps in reverse.

3.3.12 Center staple alignment motor/F (M24)

1. Remove the saddle unit.
   See P.7
2. Remove the right cover.
   See P.6

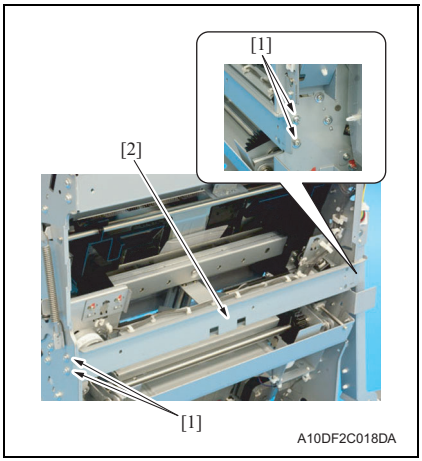

3. Remove four screws [1], and remove the plate [2].

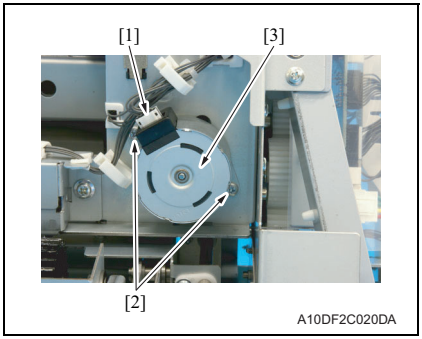

4. Disconnect the connector [1].
5. Remove two screws [2], and remove the center staple alignment motor/F [3].
6. Reinstall the above parts following the removal steps in reverse.

3.3.13 Center fold roller motor (M25)

1. Remove the saddle unit.
   See P.7

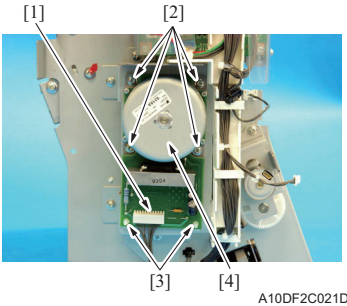

A10DF2C021DA

2. Disconnect the connector [1].
3. Remove four screws [2] and two card spacers [3], and remove the center fold roller motor [4].
4. Reinstall the above parts following the removal steps in reverse.

3.3.14 Center fold plate motor (M26)

1. Remove the saddle unit.
   See P.7
2. Remove the leading edge stopper motor.
   See P.13

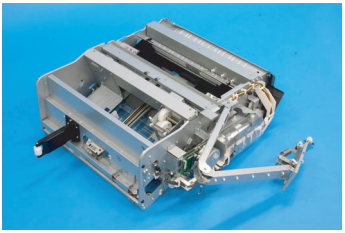
A10DF2C022DA

3. Lay down the saddle unit as shown in the illustration.

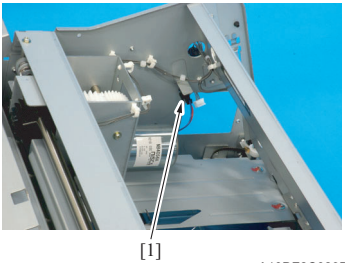

A10DF2C023DA

4. Disconnect the connector [1].

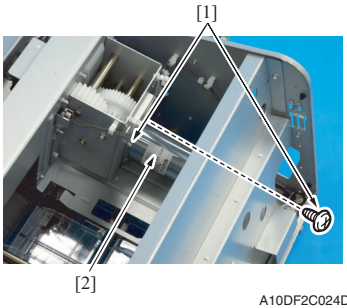

A10DF2C024DA

5. Remove two screws [1], and remove the center fold plate motor [2].

6. Reinstall the above parts following the removal steps in reverse.

3.3.15 Leading edge grip solenoid (SD3)

1. Remove the saddle unit.
See P.7

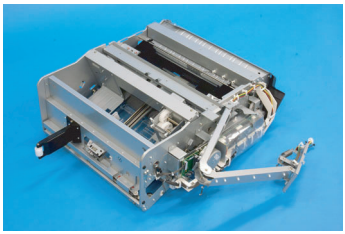
A10DF2C022DA

2. Lay down the saddle unit as shown in the illustration.

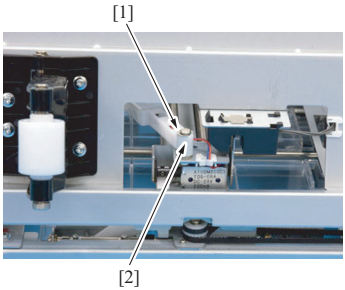

A10DF2C025DA

3. Remove the E-ring [1], and remove the drive lever [2].

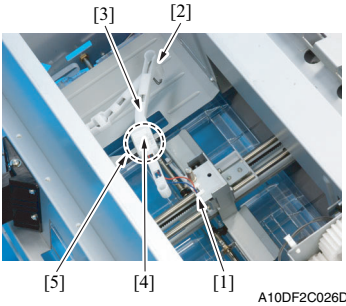

A10DF2C026DA

4. Remove the harness from the cord clamp [1].
5. Remove the C-clip [2], and remove the drive lever [3].
6. Remove the tape [4], and disconnect the connector [5].

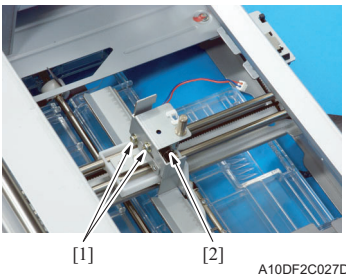

A10DF2C027DA

7. Remove two screws [1], and remove the leading edge grip solenoid [2].

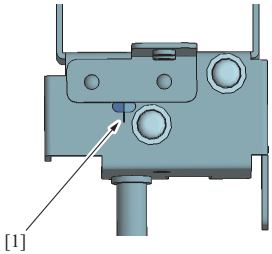

A10DF2C500DA

8. Reinstall the above parts following the removal steps in reverse.

NOTE

- **Secure the plate edge section of the leading edge grip solenoid by fitting the mark-off line [1].**

ADJUSTMENT/SETTING

4. HOW TO USE THE ADJUSTMENT SECTION

- “Adjustment/Setting” contains detailed information on the adjustment items and procedures for this machine.
- Throughout this “Adjustment/Setting,” the default settings are indicated by “ ”.

Advance checks

Before attempting to solve the customer problem, the following advance checks must be made. Check to see if:

- The power supply voltage meets the specifications.
- The power supply is properly grounded.
- The machine shares the power supply with any other machine that draws large current intermittently (e.g., elevator and air conditioner that generate electric noise).
- The installation site is environmentally appropriate: high temperature, high humidity, direct sunlight, ventilation, etc.; levelness of the installation site.
- The original has a problem that may cause a defective image.
- The density is properly selected.
- The original glass, slit glass, or related part is dirty.
- Correct paper is being used for printing.
- The units, parts, and supplies used for printing (developer, PC drum, etc.) are properly replenished and replaced when they reach the end of their useful service life.
- Toner is not running out.

⚠ CAUTION

- **Be sure to unplug the power cord of the machine before starting the service job procedures.**
- **If it is unavoidably necessary to service the machine with its power turned ON, use utmost care not to be caught in the scanner cables or gears of the exposure unit.**
- **Special care should be used when handling the fusing unit which can be extremely hot.**
- **The developing unit has a strong magnetic field. Keep watches and measuring instruments away from it.**
- **Take care not to damage the PC drum with a tool or similar device.**
- **Do not touch IC pins with bare hands.**

5. MECHANICAL ADJUSTMENT

5.1 Mechanical adjustment of the paper exit section

5.1.1 Half-fold skew adjustment

This adjustment must be made in the following case:
- **Fold line goes off the tolerance in the half-fold mode.**

A. Procedure

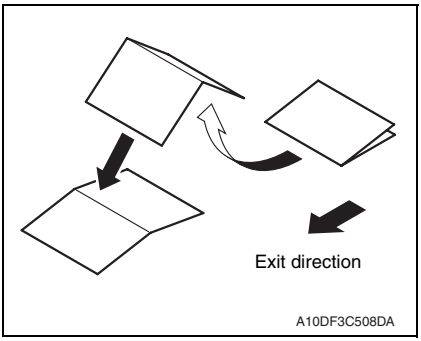

1. Make a copy in the half-fold mode.
2. Unfold the paper that exits the machine and lay the paper with the ridge facing up.

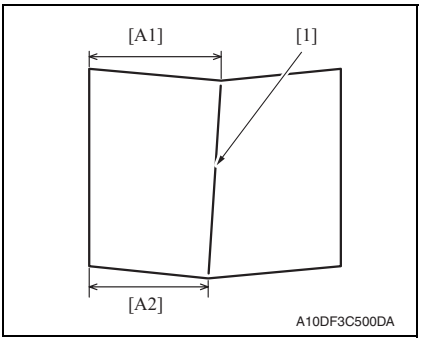

3. Confirm the skew of the fold line [1] of the output copy sample (Widths of A1 and A2)
   Standard value: A1-A2=0±1.0 mm
4. In case the figure exceeds the above mentioned standard value, follow the adjustment procedures below.

5. Open the front door of the finisher.
6. Pull the saddle unit.

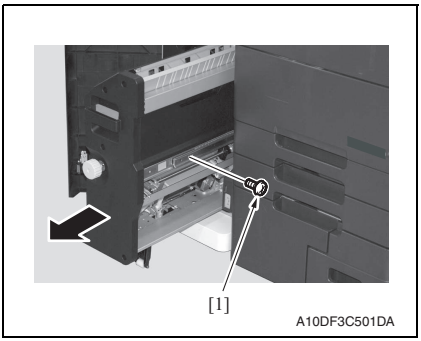

7. Remove the screw [1], and pull the saddle unit out completely.

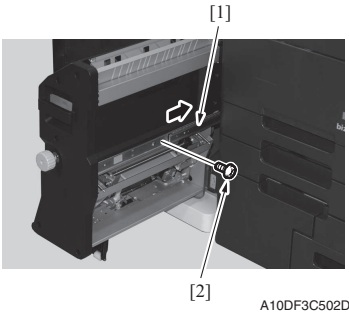

A10DF3C502DA

8. Slide down the movable part [1] of the right rail and remove the screw [2].

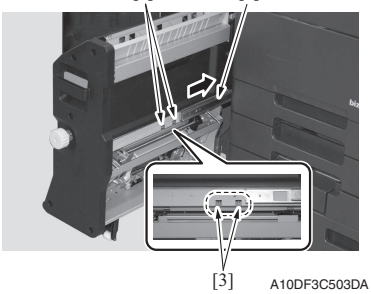

A10DF3C503DA

9. Push down the right rail [2] until the two notches [1] are visible as shown in the illustration below.

10. Loosen two screws [3].

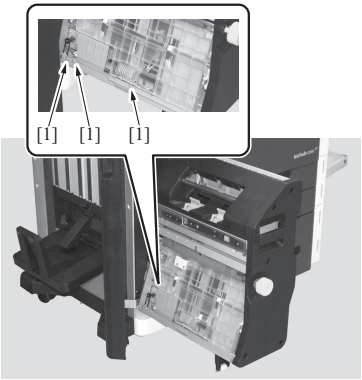

A10DF3C504DA

11. Loosen three screws [1].

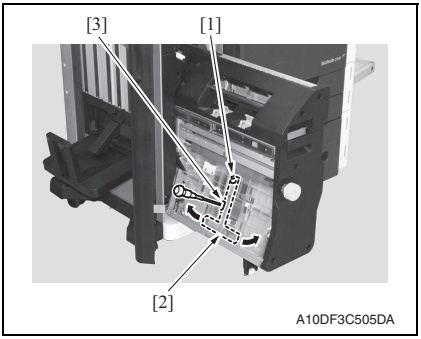

12. Incline the stopper [2] forward or backward according to the skew of the crease using the shoulder screw [1] as the supporting point.

NOTE

- **Push the driver or equivalent into the cover hole [3] to incline the stopper [2].**

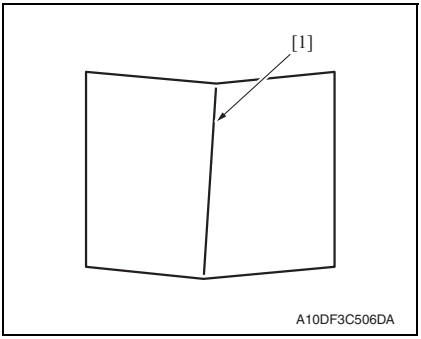

- In case the cease [1] skews as shown in the illustration:
  Incline the stopper backward.

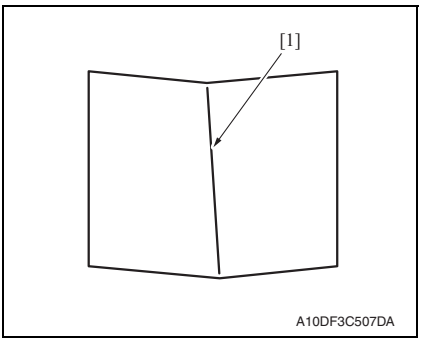

- In case the cease [1] skews as shown in the illustration:
  Incline the stopper forward.

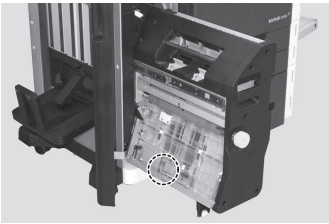

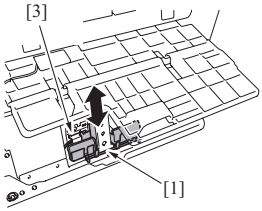

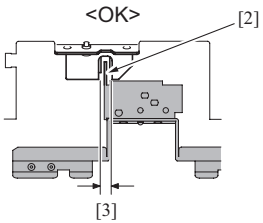

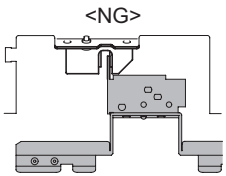

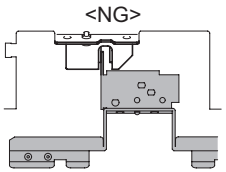

A10DF3C509DA

13. Move the stopper [1] up and down to confirm that the stopper's light blocking plate [2] does not touch the inner surfaces of the sensor slit [3].

14. In case of <NG>, take the following step.

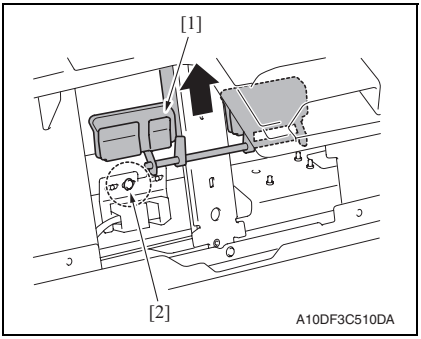

15. Raise the stopper [1] and loosen the screw [2] that holds the sensor mounting plate.

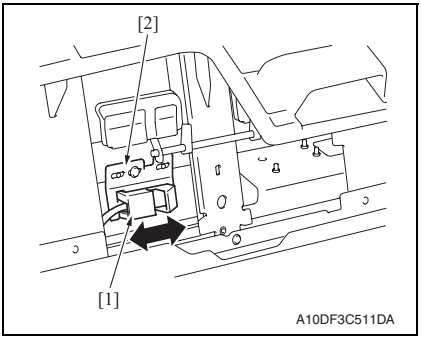

16. To make the light blocking plate pass the center of the sensor slit [1], move the sensor mounting plate [2] from side to side and adjust the mounting plate's position.

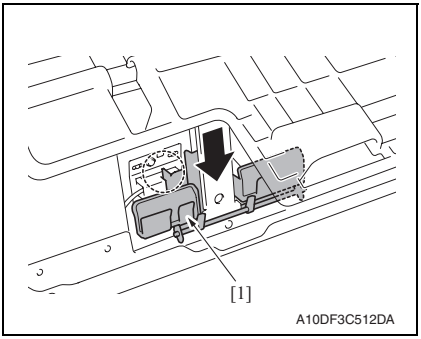

17. Lower the stopper [1] and confirm that the state is that of <OK>.

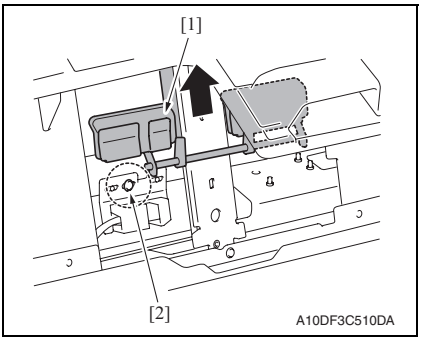

18. Raise the stopper [1] again and tighten the screw [2] that was loosened in step 15.

19. Make the copy sample again to confirm the cease skew.

20. Reinstall the above parts following the removal steps in reverse.

KONICA MINOLTA

SERVICE MANUAL

FIELD SERVICE

JS-603

2010.04

KONICA MINOLTA BUSINESS TECHNOLOGIES, INC. Ver. 1.0

Revision history

After publication of this service manual, the parts and mechanism may be subject to change for improvement of their performance.
Therefore, the descriptions given in this service manual may not coincide with the actual machine.

When any change has been made to the descriptions in the service manual, a revised version will be issued with a revision mark added as required.

Revision mark:

- To indicate clearly a section revised, ⚠1 is shown at the left margin of the revised section.
  The number inside ⚠1 represents the number of times the revision has been made.

- To indicate clearly a page that contains the revision, ▲1 is shown near the page number of the corresponding page.
  The number inside ▲1 represents the number of times the revision has been made.

NOTE

Revision marks shown in a page are restricted only to the latest ones with the old ones deleted.

- When a page revised in Ver. 2.0 has been changed in Ver. 3.0:
  The revision marks for Ver. 3.0 only are shown with those for Ver. 2.0 deleted.
- When a page revised in Ver. 2.0 has not been changed in Ver. 3.0:
  The revision marks for Ver. 2.0 are left as they are.

2010/04	1.0	—	Issue of the first edition
Date	Service manual Ver.	Revision mark	Descriptions of revision

CONTENTS

JS-603

OUTLINE

1. PRODUCT SPECIFICATIONS 1

MAINTENANCE

2. PERIODICAL MAINTENANCE PROCEDURE 3
3. OTHER MAINTENANCE ITEM 4
3.1 Items not allowed to be disassembled and adjusted 4
3.2 Disassembly/reassembly parts list 5
3.3 Disassembly/reassembly procedure 5
3.3.1 Separator 5
3.3.2 Tray3 exit roller retraction motor (M17) 6

Blank Page

OUTLINE

1. PRODUCT SPECIFICATIONS

A. Type

Type	Fixed to the finisher
Document alignment	Center

B. Functions

Modes	Sort, group

C. Paper

Size	Type		Capacity
A5S, B5S/B5, A4S/A4, B4, A3, A3 Wide 5-1/2 X 8-1/2S, 8-1/2 X 11S/8-1/2 X 11, 8-1/2 X 14, 11 X 17, 12-1/4 X 18 Max.: 311.15 mm X 457.2 mm 12.25 inch X 18 inch Min.: 139.7 mm X 182 mm 5.5 inch X 7.17 inch	Plain paper (60 to 90 g/m²) (16 to 24 lb)		100 sheets
	Special paper	Thick paper 1 (91 to 150 g/m²) (24.25 to 40 lb)	10 sheets
		Thick paper 2 (151 to 209 g/m²) (40.25 to 55.5 lb)	
		Thick paper 3 (210 to 256 g/m²) (55.75 to 68 lb)	
		Thick paper 4 (257 to 271 g/m²) (68.25 to 72 lb)	
		OHP film	
		Label	
		Envelope	

D. Machine specifications

Power requirements	DC 24 V ± 10 % (supplied from the main body)
	DC5 V ± 5 %
Dimensions	165 mm (W) X 389 mm (D) X 63 mm (H) 6.5 inch (W) X 15.31 inch (D) X 2.48 inch (H)
Weight	1.0 kg (2.2 lb)

E. Operating environment

- Conforms to the operating environment of the main body.

NOTE

- **These specifications are subject to change without notice.**

Blank Page

MAINTENANCE

2. PERIODICAL MAINTENANCE PROCEDURE

- Periodically replaced parts are not employed.

3. OTHER MAINTENANCE ITEM

3.1 Items not allowed to be disassembled and adjusted

A. Paint-locked screws

NOTE

- **To prevent loose screws, a screw lock in blue or green series color is applied to the screws.**
- **The screw lock is applied to the screws that may get loose due to the vibrations and loads created by the use of machine or due to the vibrations created during transportation.**
- **If the screw lock coated screws are loosened or removed, be sure to apply a screw lock after the screws are tightened.**

B. Red-painted screws

NOTE

- **The screws which are difficult to be adjusted in the field are painted in red in order to prevent them from being removed by mistake.**
- **Do not remove or loosen any of the red-painted screws in the field. It should also be noted that, when two or more screws are used for a single part, only one representative screw may be marked with the red paint.**

C. Variable resistors on board

NOTE

- **Do not turn the variable resistors on boards for which no adjusting instructions are given in Adjustment/Setting.**

D. Removal of PWBs

⚠ CAUTION

- **When removing a circuit board or other electrical component, refer to “Handling of PWBs” and follow the corresponding removal procedures.**
- **The removal procedures given in the following omit the removal of connectors and screws securing the circuit board support or circuit board.**
- **Where it is absolutely necessary to touch the ICs and other electrical components on the board, be sure to ground your body.**

3.2 Disassembly/reassembly parts list

Section	Part name	Ref. page
Unit	Separator	P.5
Other	Tray3 exit roller retraction motor (M17)	P.6

3.3 Disassembly/reassembly procedure

3.3.1 Separator

1. Remove the horizontal transport unit.
   See P.15 of the FS-527 service manual.

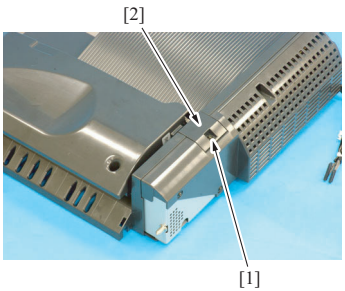

A10FF2C001DA

2. Remove two screws [1], and remove the cover [2].

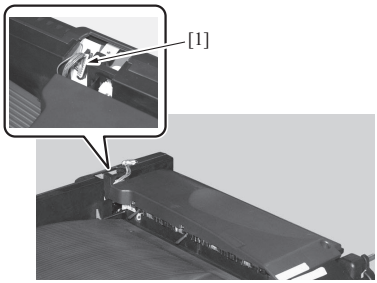

A10FF2C500DA

3. Disconnect the connector [1].

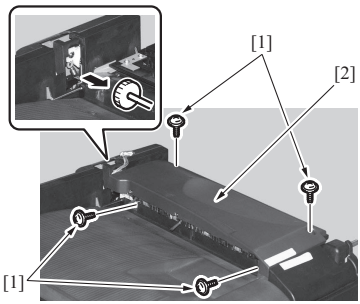

A10FF2C501DA

4. Remove four screws [1], and remove the separator [2].
5. Reinstall the above parts following the removal steps in reverse.

3.3.2 Tray3 exit roller retraction motor (M17)

1. Remove the separator.
See P.5

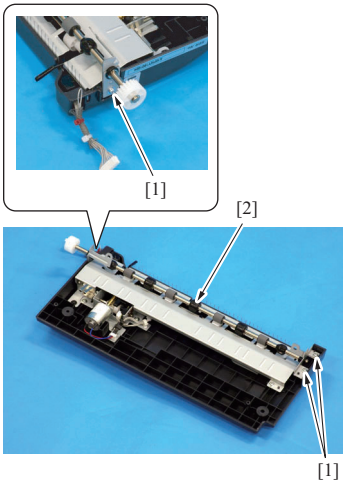

A10FF2C002DA

2. Remove three screws [1], and remove the exit roller assy [2].

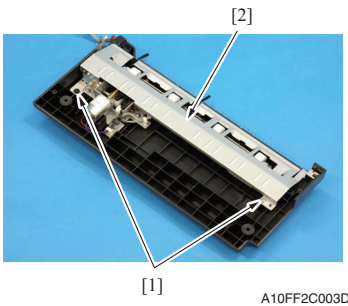

A10FF2C003DA

3. Remove two screws [1], and remove the plate [2].

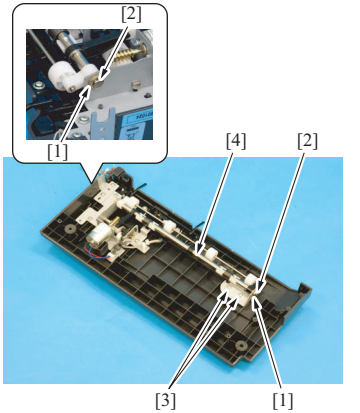

A10FF2C004DA

4. Remove two E-rings [1] and two bushings [2].
5. Remove two screws [3], and remove the exit rolls assy [4].

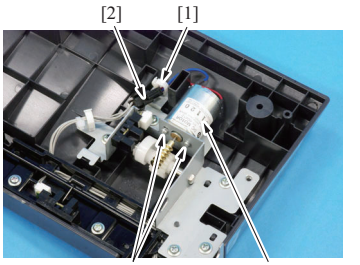

A10FF2C005DA

6. Remove the harness from the wire saddle [1].
7. Disconnect the connector [2].
8. Remove two screws [3], and remove the tray3 exit roller retraction motor [4].

9. Reinstall the above parts following the removal steps in reverse.

Blank Page

KONICA MINOLTA

SERVICE MANUAL

FIELD SERVICE

FS-529

2010.04

KONICA MINOLTA BUSINESS TECHNOLOGIES, INC. Ver. 1.0

Revision history

After publication of this service manual, the parts and mechanism may be subject to change for improvement of their performance.
Therefore, the descriptions given in this service manual may not coincide with the actual machine.

When any change has been made to the descriptions in the service manual, a revised version will be issued with a revision mark added as required.

Revision mark:

- To indicate clearly a section revised, ⚠1 is shown at the left margin of the revised section.
  The number inside ⚠1 represents the number of times the revision has been made.

- To indicate clearly a page that contains the revision, ▲1 is shown near the page number of the corresponding page.
  The number inside ▲1 represents the number of times the revision has been made.

NOTE

Revision marks shown in a page are restricted only to the latest ones with the old ones deleted.

- When a page revised in Ver. 2.0 has been changed in Ver. 3.0:
  The revision marks for Ver. 3.0 only are shown with those for Ver. 2.0 deleted.
- When a page revised in Ver. 2.0 has not been changed in Ver. 3.0:
  The revision marks for Ver. 2.0 are left as they are.

2010/04	1.0	—	Issue of the first edition
Date	Service manual Ver.	Revision mark	Descriptions of revision

CONTENTS

FS-529

OUTLINE

1. PRODUCT SPECIFICATIONS 1

MAINTENANCE

2. PERIODICAL MAINTENANCE PROCEDURE 3
2.1 Paper exit section 3
2.1.1 Cleaning procedure for each parts 3
3. OTHER MAINTENANCE ITEM 4
3.1 Items not allowed to be disassembled and adjusted 4
3.2 Disassembly/reassembly parts list 5
3.3 Disassembly/reassembly procedure 6
3.3.1 Front left cover 6
3.3.2 Front right cover 6
3.3.3 Upper cover 7
3.3.4 Rear cover 8
3.3.5 Finisher 8
3.3.6 Conveyance roller unit 10
3.3.7 Stapler unit 10
3.3.8 Paper exit tray unit 12
3.3.9 FS control board (FSCB) 15
3.3.10 Pick up roller position motor (M1) 16
3.3.11 Tray up/down motor (M2) 17
3.3.12 Conveyance motor/1 (M5) 19
3.3.13 Conveyance motor/2 (M6) 20
3.3.14 Stapler movement motor (M7) 21
3.3.15 Fan motor (FM1) 22
3.3.16 Paddle solenoid (SD2) 24
3.3.17 Flapper solenoid (SD4) 25
3.3.18 Belt retract solenoid (SD5) 27
3.3.19 Harness guide 28

Blank Page

OUTLINE

1. PRODUCT SPECIFICATIONS

A. Type

Type	Multi staple finisher built into the main body
Installation	Installed in main body
Document alignment	Center

B. Functions

Modes	Sort, group, sort offset, group offset, sort staple

C. Paper

Size	Type		Capacity	
			Letter S, A4S, 8-1/2 X 11S or less	Legal, B4, 8-1/2 X 14 or greater
A6S, A5S/A5, B6S, B5S/B5, A4S/A4, B4, A3, A3 Wide 5-1/2 X 8-1/2S/5-1/2 X 8-1/2, 8-1/2 X 11S/8-1/2 X 11, 8-1/2 X 14, 11 X 17, 12-1/4 X 18 Max.: 311.15 mm X 1200 mm 12.25 inch X 47.24 inch Min.: 90 mm X 139.7 mm 3.54 inch X 5.5 inch	Plain paper (60 to 90 g/m²) (16 to 24 lb)		300 sheets (30 copies)	250 sheets (30 copies)
	Special paper	Thick paper 1 (91 to 150 g/m²) (24.25 to 40 lb)	10 sheets	
		Thick paper 2 (151 to 209 g/m²) (40.25 to 55.5 lb)		
		Thick paper 3 (210 to 256 g/m²) (55.75 to 68 lb)		
		Thick paper 4 (257 to 271 g/m²) (68.25 to 72 lb)		
		OHP film		
		Label		
		Envelope		
		Long size paper	—	

D. Offset function

Shift amount	30 mm
Types of paper to be used	Plain paper, Thick paper (91 to 209 g/m², 24.25 to 55.5 lb)
Size	B5, A4S/A4, B4, A3 8-1/2 X 11S/8-1/2 X 11, 8-1/2 X 14, 11 X 17

E. Stapling

No. of sheets to be stapled	Letter S, A4S, 8-1/2 X 11S or less	50 sheets
	Legal, B4, 8-1/2 X 14 or greater	30 sheets
	60 to 90 g/m² (16 to 24 lb): 48 sheets + 2 sheets (209 g/m² (55.5 lb))	
Stapling position	Back of the corner Front of the corner Center two points	

F. Machine specifications

Power requirements	DC 24 V ± 10 % (supplied from the main body)
	DC5.1 V ± 5 %
Max. power consumption	56 W or less
Dimensions	471 mm (W) X 564 mm (D) X 147 mm (H) 18.54 inch (W) X 22.20 inch (D) X 5.79 inch (H)
Weight	12.0 kg (26.46 lb)

G. Operating environment

- Conforms to the operating environment of the main body.

NOTE

- **These specifications are subject to change without notice.**

MAINTENANCE

2. PERIODICAL MAINTENANCE PROCEDURE

2.1 Paper exit section

NOTE

- **The alcohol described in the cleaning procedure of maintenance represents the isopropyl alcohol.**

2.1.1 Cleaning procedure for each parts

A. Periodically cleaning parts/cycle

- Each rollers/Each rolls: Every 300,000 counts

B. Cleaning point

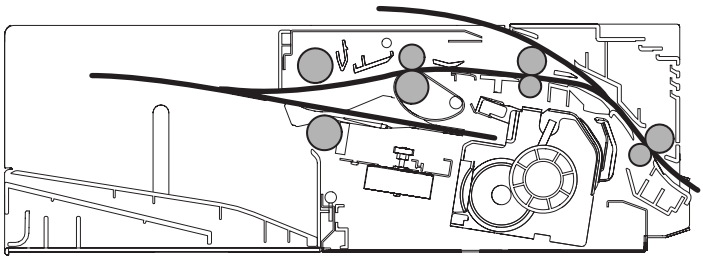

A0U7F2C500DA

3. OTHER MAINTENANCE ITEM

3.1 Items not allowed to be disassembled and adjusted

A. Paint-locked screws

NOTE

- **To prevent loose screws, a screw lock in blue or green series color is applied to the screws.**
- **The screw lock is applied to the screws that may get loose due to the vibrations and loads created by the use of machine or due to the vibrations created during transportation.**
- **If the screw lock coated screws are loosened or removed, be sure to apply a screw lock after the screws are tightened.**

B. Red-painted screws

NOTE

- **The screws which are difficult to be adjusted in the field are painted in red in order to prevent them from being removed by mistake.**
- **Do not remove or loosen any of the red-painted screws in the field. It should also be noted that, when two or more screws are used for a single part, only one representative screw may be marked with the red paint.**

C. Variable resistors on board

NOTE

- **Do not turn the variable resistors on boards for which no adjusting instructions are given in Adjustment/Setting.**

D. Removal of PWBs

⚠ CAUTION

- **When removing a circuit board or other electrical component, refer to “Handling of PWBs” and follow the corresponding removal procedures.**
- **The removal procedures given in the following omit the removal of connectors and screws securing the circuit board support or circuit board.**
- **Where it is absolutely necessary to touch the ICs and other electrical components on the board, be sure to ground your body.**

3.2 Disassembly/reassembly parts list

Section	Part name	Ref. page
Exterior parts	Front left cover	P.6
	Front right cover	P.6
	Upper cover	P.7
	Rear cover	P.8
Units	Finisher	P.8
	Conveyance roller unit	P.10
	Stapler unit	P.10
	Paper exit tray unit	P.12
Board and etc.	FS control board (FSCB)	P.15
	Pick up roller position motor (M1)	P.16
	Tray up/down motor (M2)	P.17
	Conveyance motor/1 (M5)	P.19
	Conveyance motor/2 (M6)	P.20
	Stapler movement motor (M7)	P.21
	Fan motor (FM1)	P.22
	Paddle solenoid (SD2)	P.24
	Flapper solenoid (SD4)	P.25
	Belt retract solenoid (SD5)	P.27
Other	Harness guide	P.28

3.3 Disassembly/reassembly procedure

3.3.1 Front left cover

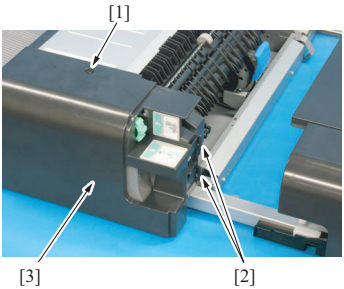

1. Remove the screw [1] and two tabs [2], and remove the front left cover [3].

2. Reinstall the above parts following the removal steps in reverse.

3.3.2 Front right cover

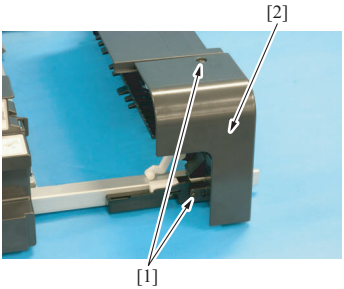

1. Remove two screws [1], and remove the front right cover [2].

2. Reinstall the above parts following the removal steps in reverse.

3.3.3 Upper cover

1. Remove the front left cover.
   See P.6
2. Remove the rear cover.
   See P.8

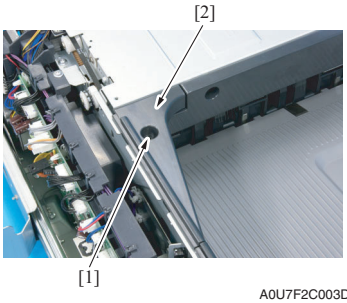

3. Remove the screw [1], and remove the cover [2].

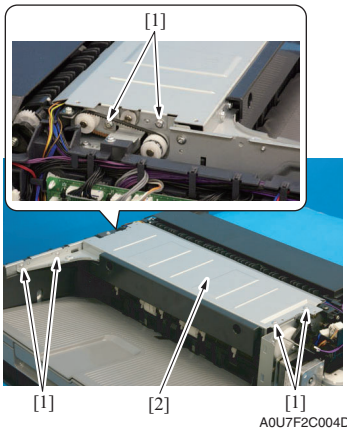

4. Remove six screws [1], and remove the upper cover [2].

5. Reinstall the above parts following the removal steps in reverse.

3.3.4 Rear cover

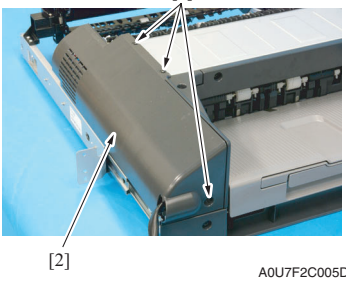

A0U7F2C005DA

1. Remove three screws [1], and remove the rear cover [2].

2. Reinstall the above parts following the removal steps in reverse.

3.3.5 Finisher

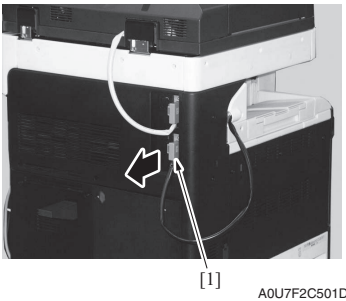

A0U7F2C501DA

1. Remove the relay cord [1].

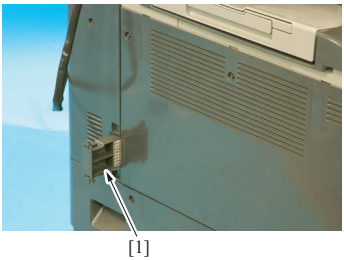

A0U7F2C006DA

2. Remove the ozone filter [1].

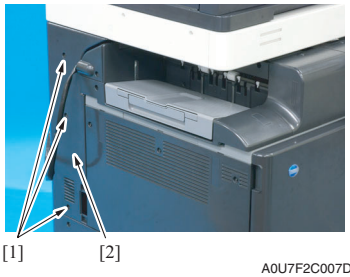

3. Remove three screws [1], and remove the rear left cover [2] of the main body.

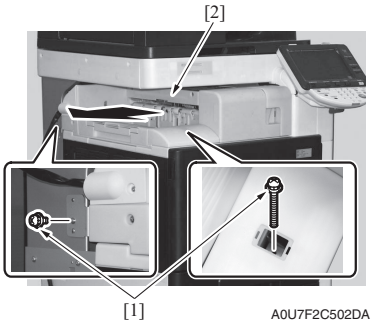

4. Remove two screws [1], and remove the finisher [2].

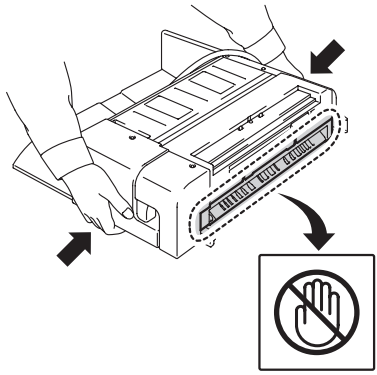

NOTE

- **When carrying the finisher, be sure to hold onto the specified positions as shown in the left illustlation.**

5. Reinstall the above parts following the removal steps in reverse.

3.3.6 Conveyance roller unit

1. Remove the front right cover.
   See P.6

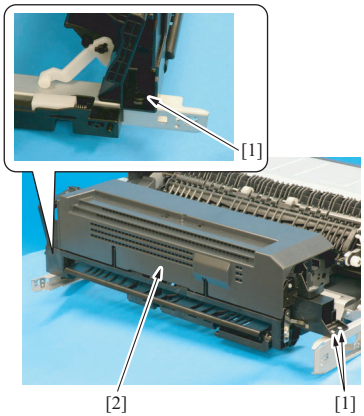

2. Remove three screws [1], and remove the conveyance roller unit [2].

3. Reinstall the above parts following the removal steps in reverse.

3.3.7 Stapler unit

1. Remove the front right cover.
   See P.6
2. Remove the conveyance roller unit.
   See P.10

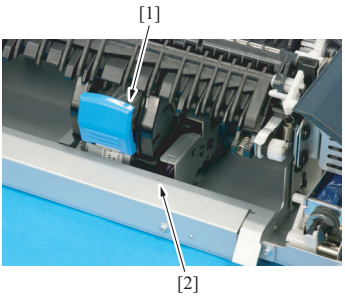

3. Move the stapler unit [1] to the marked position [2].

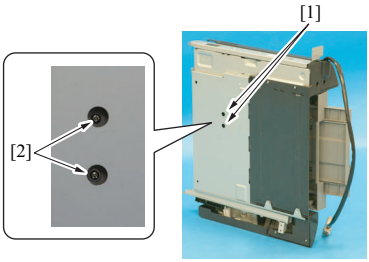

A0U7F2C010DA

4. Put the finisher as shown in the illustration and remove two screws [2] from the screw access holes [1] on the bottom plate.

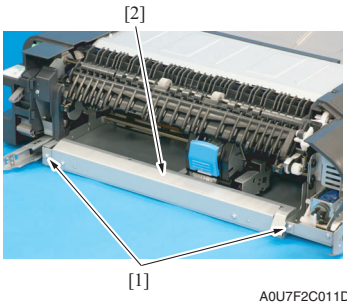

A0U7F2C011DA

5. Remove two screws [1], and remove the plate [2].

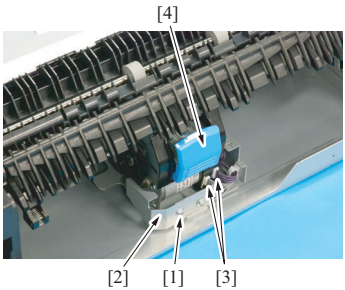

A0U7F2C012DA

6. Remove the screw [1], and remove the stapler cover plate [2].
7. Disconnect two connectors [3].
8. Remove the stapler unit [4].

9. Reinstall the above parts following the removal steps in reverse.

3.3.8 Paper exit tray unit

1. Remove the front left cover.
   See P.6
2. Remove the rear cover.
   See P.8

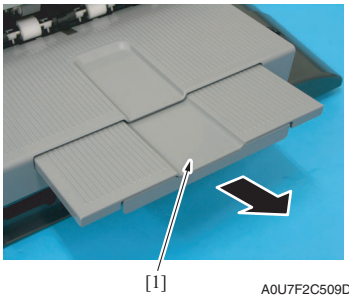

3. Remove the support tray [1].

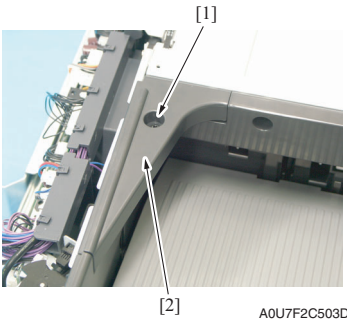

4. Remove the screw [1], and remove the cover [2].

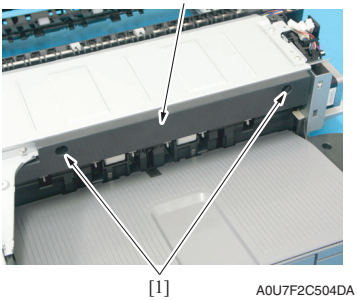

5. Remove two screws [1], and remove the exit roller cover [2].

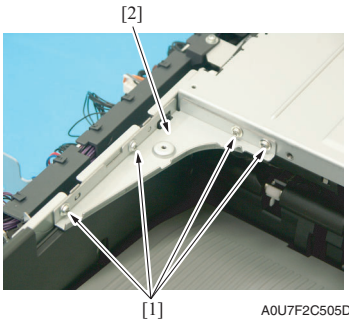

6. Remove four screws [1], and remove the plate [2].

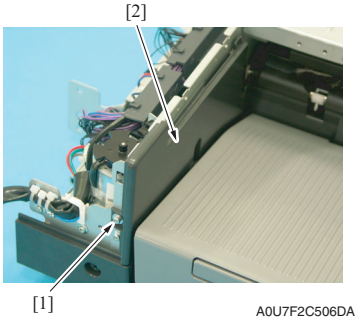

7. Remove the screw [1], and remove the rear sub cover [2].

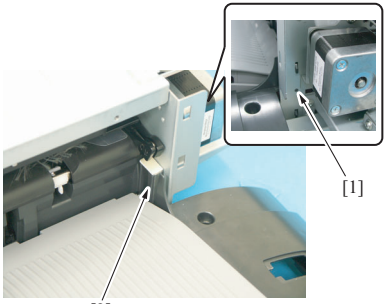

8. Press the dowel [1] and remove the cover rail [2].

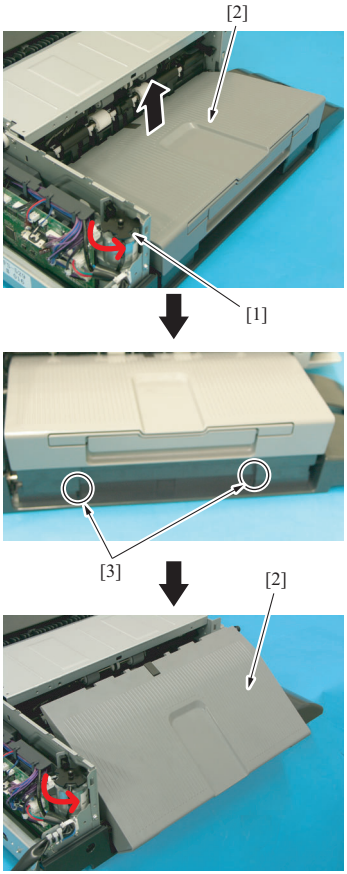

A0U7F2C508DA

9. Turn the motor [1] in the direction shown by the arrow and raise the exit tray [2].
10. Unhook two shutter tabs [3].
11. Turn the motor [1] further and raise the exit tray [2].

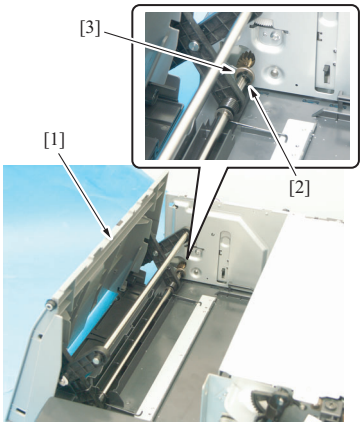

A0U7F2C510DA

12. Raise the exit tray [1] until the spring tension becomes weak as shown in the illustration.
13. Remove the clip [2] and bushing [3].

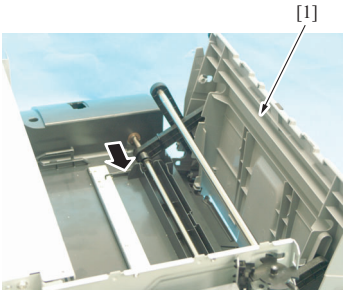

A0U7F2C511DA

14. Remove the front shaft and remove the exit tray unit [1].

15. Reinstall the above parts following the removal steps in reverse.

3.3.9 FS control board (FSCB)

1. Remove the rear cover.
   See P.8
2. Remove all connectors from the FS control board.
3. Remove the screw [1] and two board supports [2], and remove the FS control board [3].

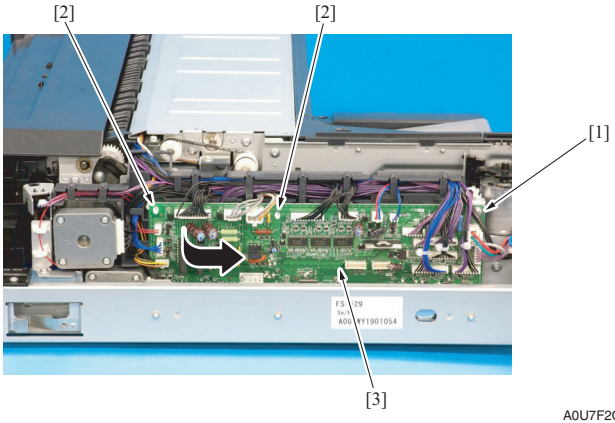

A0U7F2C013DA

4. Reinstall the above parts following the removal steps in reverse.

3.3.10 Pick up roller position motor (M1)

1. Remove the front left cover.
See P.6

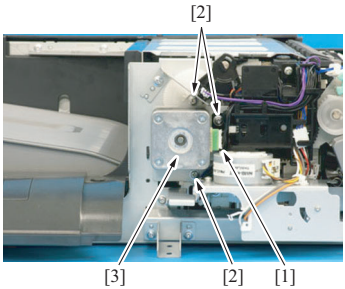

2. Disconnect the connector [1].
3. Remove three screws [2], and remove the pick up roller position motor assy [3].

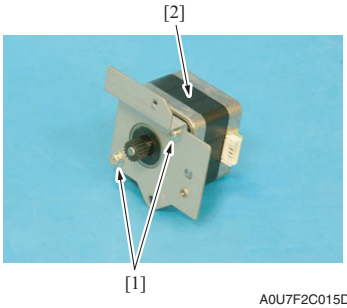

4. Remove two screws [1], and remove the pick up roller position motor [2].

5. Reinstall the above parts following the removal steps in reverse.

3.3.11 Tray up/down motor (M2)

1. Remove the rear cover.
   See P.8
2. Remove the upper cover.
   See P.7
3. Remove the FS control board.
   See P.15
4. Remove the conveyance roller unit.
   See P.10
5. Remove the harness guide.
   See P.28

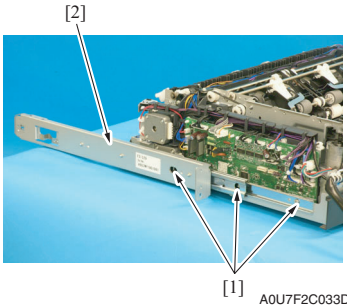

6. Remove three screws [1], and remove the rear rail [2].

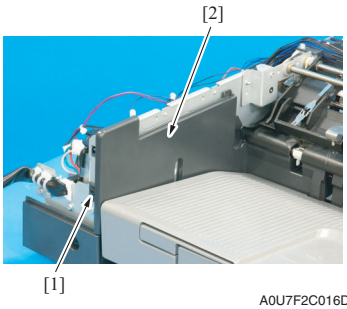

7. Remove the screw [1], and remove the rear sub cover [2].

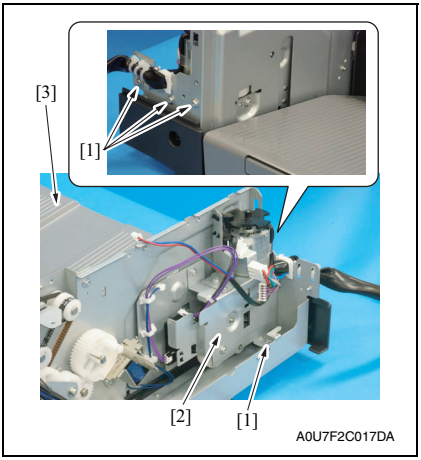

8. Remove four screws [1], and remove the tray up/down motor assy [2].

NOTE

- **When removing the tray up/down motor assy [2], the exit tray [3] bounces. Be sure to press the exit tray [3] down when removing the tray up/down motor assy [2].**

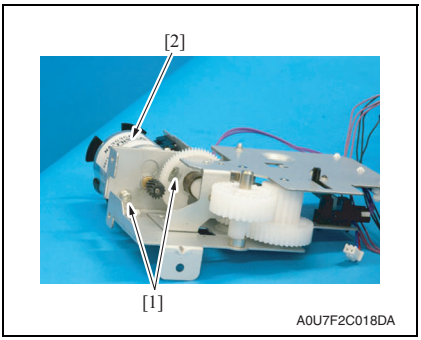

9. Remove two screws [1], and remove the tray up/down motor [2].

10. Reinstall the above parts following the removal steps in reverse.

3.3.12 Conveyance motor/1 (M5)

1. Remove the rear cover.
   See P.8
2. Remove the conveyance roller unit.
   See P.10
3. Remove the FS control board.
   See P.15
4. Remove the harness guide.
   See P.28

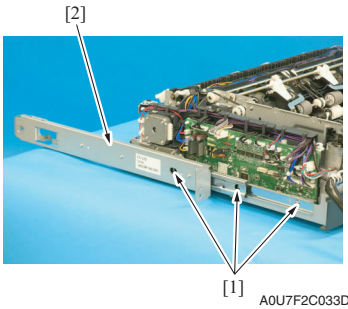

5. Remove three screws [1], and remove the rear rail [2].

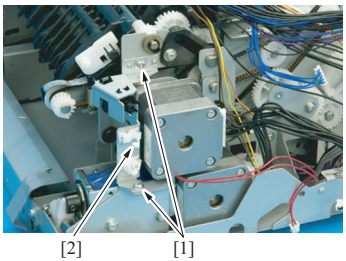

6. Remove two screws [1], and remove the sensor assy [2].

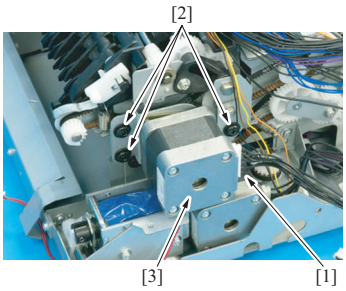

7. Disconnect the connector [1].
8. Remove three screws [2], and remove the conveyance motor/1 [3].

9. Reinstall the above parts following the removal steps in reverse.

3.3.13 Conveyance motor/2 (M6)

1. Remove the rear cover.
   See P.8
2. Remove the conveyance roller unit.
   See P.10
3. Remove the flapper solenoid.
   See P.25
4. Remove the conveyance motor/1.
   See P.19

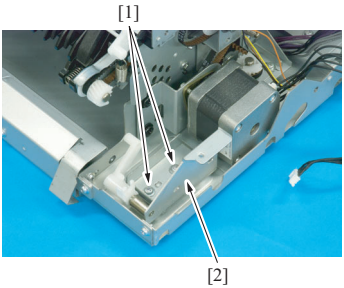

A0U7F2C021DA

5. Remove two screws [1] and the solenoid mounting plate [2].

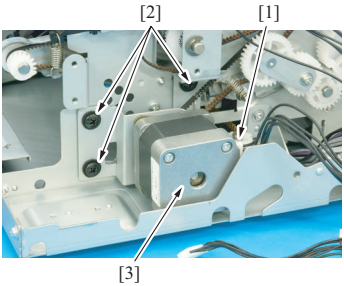

A0U7F2C022DA

6. Disconnect the connector [1].
7. Remove three screws [2], and remove the conveyance motor/2 [3].
8. Reinstall the above parts following the removal steps in reverse.

3.3.14 Stapler movement motor (M7)

1. Remove the front left cover.
   See P.6
2. Remove the rear cover.
   See P.8
3. Remove the upper cover.
   See P.7
4. Remove the pick up roller position motor.
   See P.16

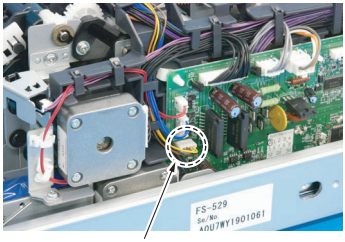

A0U7F2C023DA

5. Disconnect the connector (CN18) [1] of the FS control board.

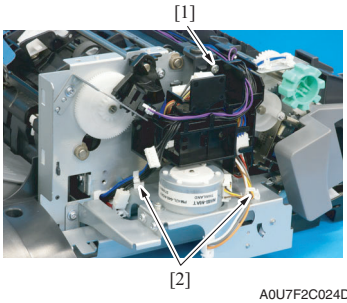

A0U7F2C024DA

6. Remove the screw [1].
7. Remove the harness from two wire saddles [2].

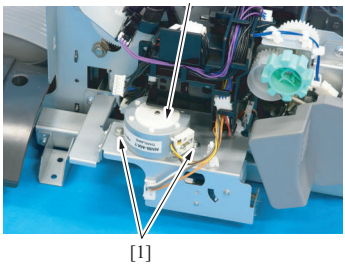

A0U7F2C025DA

8. Remove two screws [1], and remove the stapler movement motor [2].

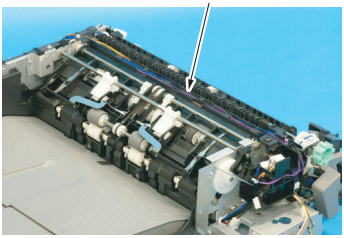

A0U7F2C026DA

9. Remove the harness from the harness guide [1].

10. Reinstall the above parts following the removal steps in reverse.

3.3.15 Fan motor (FM1)

1. Remove the front left cover.
See P.6
2. Remove the conveyance roller unit.
See P.10
3. Remove the belt retract solenoid.
See P.27

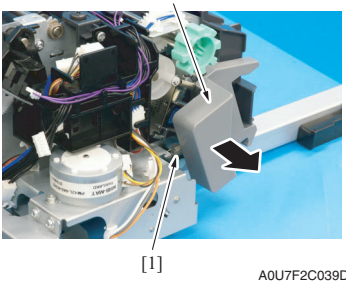

A0U7F2C039DA

4. Remove the spring [1], and remove the lever [2].

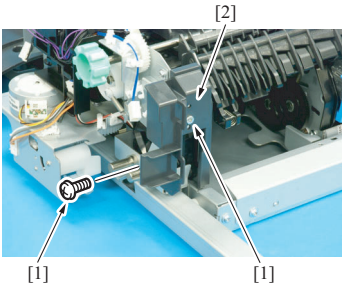

A0U7F2C027DA

5. Remove two screws [1], and remove the cover [2].

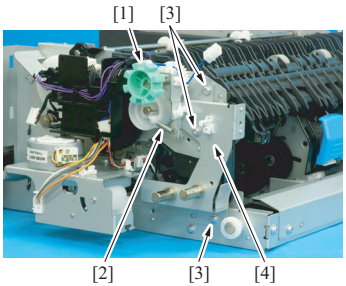

A0U7F2C028DA

6. Remove the JAM processing dial [1].
7. Remove the spring [2].
8. Remove three screws [1], and remove the plate [4].

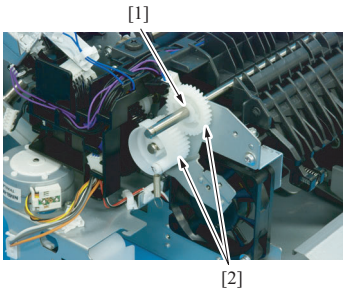

A0U7F2C029DA

9. Remove the C-ring [1], and remove two gears [2].

NOTE

- **Be careful not to lose the pin.**

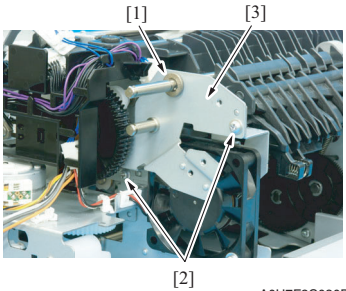

A0U7F2C030DA

10. Remove the bushing [1].
11. Remove two screws [2], and remove the gear assy [3].

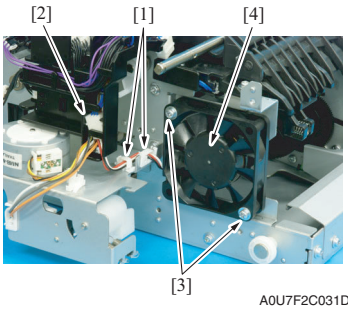

A0U7F2C031DA

12. Remove the harness from two wire saddles [1].
13. Disconnect the connector [2].
14. Remove two screws [3], and remove the fan motor [4].
15. Reinstall the above parts following the removal steps in reverse.

3.3.16 Paddle solenoid (SD2)

1. Remove the rear cover.
   See P.8
2. Remove the upper cover.
   See P.7
3. Remove the FS control board.
   See P.15
4. Remove the conveyance roller unit.
   See P.10
5. Remove the harness guide.
   See P.28

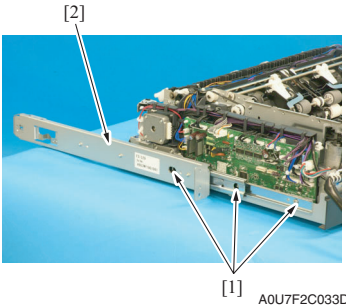

6. Remove three screws [1], and remove the rear rail [2].

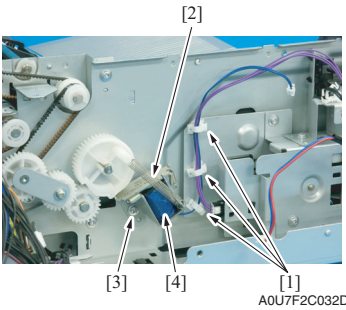

7. Remove the harness from three wire saddles [1].
8. Remove the spring [2] and the screw [3], and remove the paddle solenoid [4].
9. Reinstall the above parts following the removal steps in reverse.

3.3.17 Flapper solenoid (SD4)

1. Remove the rear cover.
   See P.8
2. Remove the conveyance roller unit.
   See P.10

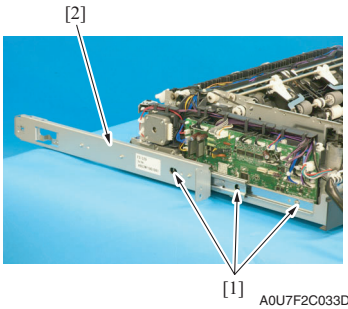

A0U7F2C033DA

3. Remove three screws [1], and remove the rear rail [2].

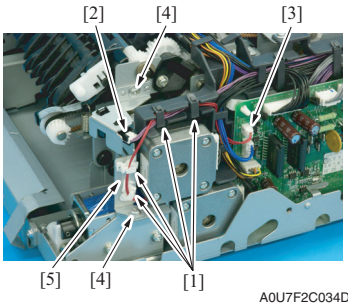

A0U7F2C034DA

4. Remove the harness from four wire saddles [1].
5. Disconnect the connector [2].
6. Disconnect the connector (CN16) [3] of the FS control board.
7. Remove two screws [4], and remove the sensor assy [5].

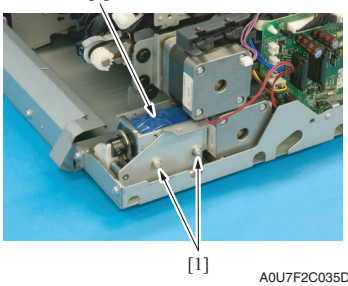

A0U7F2C035DA

8. Remove two screws [1], and remove the flapper solenoid [2].

9. Reinstall the above parts following the removal steps in reverse.

A. Adjustment after installation

1. Remove the rear cover.
See P.8

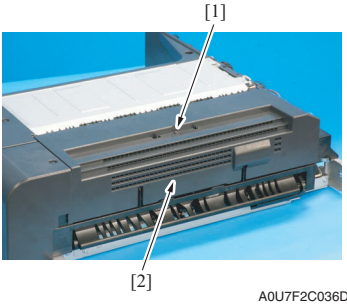

A0U7F2C036DA

2. Remove the screw [1], and remove the cover [2].

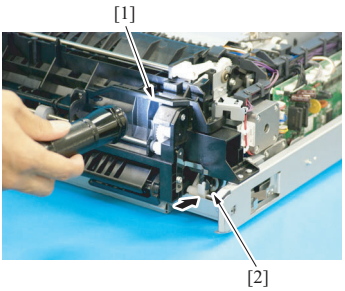

A0U7F2C037DA

3. Illuminate the inside from the opening [1] shown in the illustration.

4. Remove the flapper solenoid [2].

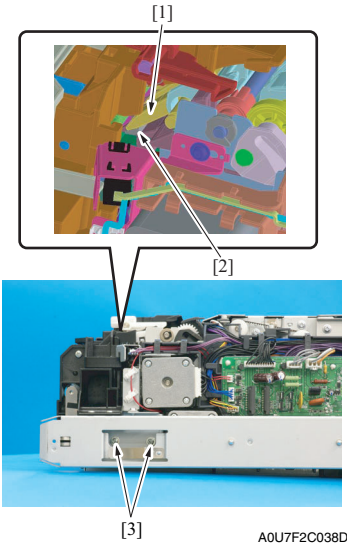

A0U7F2C038DA

5. Make sure that the flapper [1] and the damper [2] are in contact with each other and then tighten two screws [3].

3.3.18 Belt retract solenoid (SD5)

1. Remove the front left cover.
See P.6

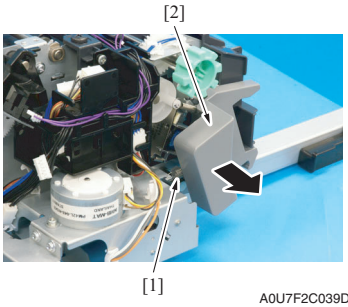

2. Remove the spring [1], and remove the lever [2].

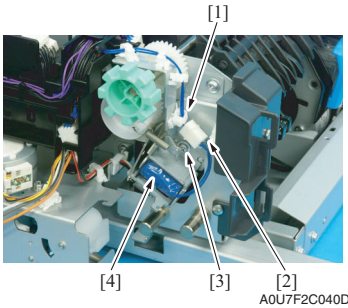

3. Remove the harness from the wire saddle [1].
4. Disconnect the connector [2].
5. Remove the screw [3], and remove the belt retract solenoid [4].

6. Reinstall the above parts following the removal steps in reverse.

3.3.19 Harness guide

1. Remove the rear cover.
   See P.8
2. Remove the FS control board.
   See P.15
3. Disconnect the connector [1].
4. Remove the harness from two wire saddles [2].
5. Remove the screw [3], and remove the ground terminal [4].
6. Remove all harness from the harness guide [5].
7. Remove the screw [6], and remove the harness guide [5].

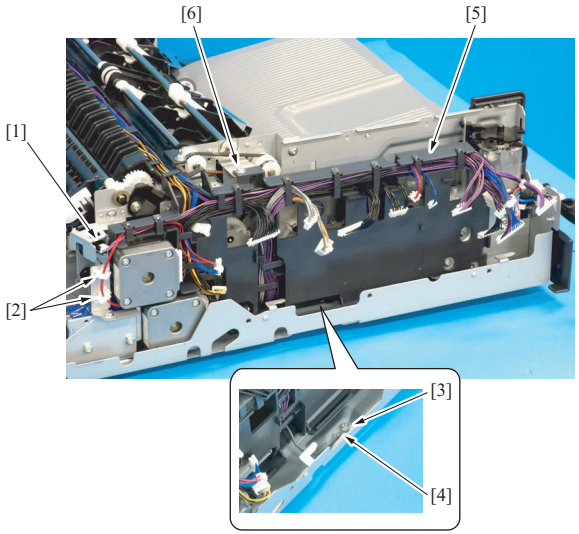

A0U7F2C041DA

8. Reinstall the above parts following the removal steps in reverse.

KONICA MINOLTA

© 2010 KONICA MINOLTA BUSINESS TECHNOLOGIES, INC.

Use of this manual should be strictly supervised to
avoid disclosure of confidential information.

Printed in Japan
DDA1UD-M-FE1.1