TOSHIBA

SERVICE PARTS LIST

DIGITAL PLAIN PAPER COPIER

DP1600/2000/2500

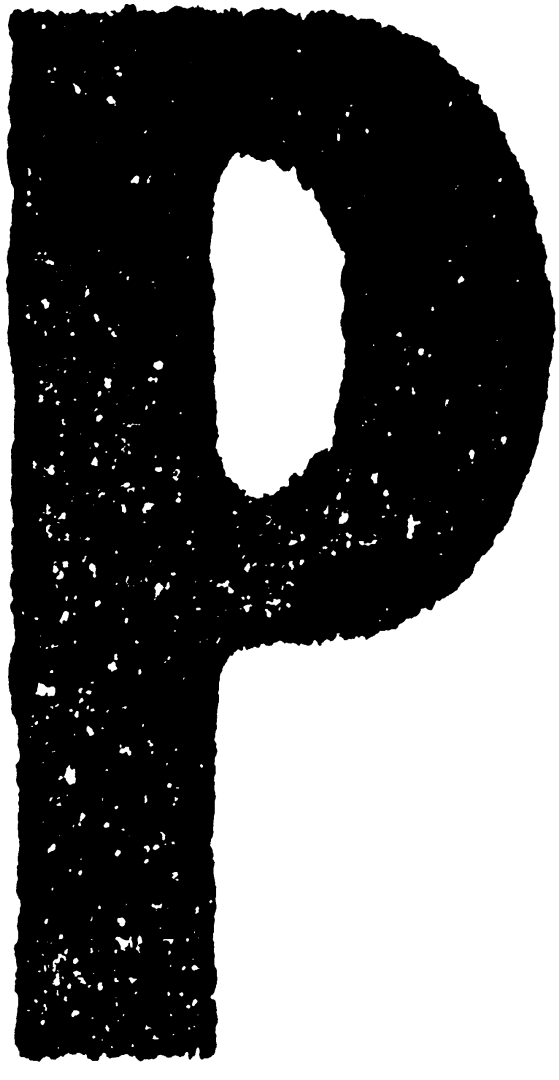

File No. 31130015

Copyright 2000

TOSHIBA TEC CORPORATION

TOSHIBA

SERVICE PARTS LIST

DIGITAL PLAIN PAPER COPIER

DP1600/2000/2500

© Copyright 2000 TOSHIBA TEC CORPORATION

EXPLANATION OF SERVICE-PARTS LIST

1. HOW TO READ THE PARTS LIST

(1) Number of pieces
The number of pieces in the list denotes total pieces used per unit. But the numbers in the list for PACKING MATERIAL and ACCESSORY denote total pieces used per machine.

(2) One pack of screws in the list includes 50 pieces.

(3) ABBREVIATED CODES

QTY/PAC
- QTY ..... one piece
- PAC ..... one pack
- 1/P ..... one piece packed in polyethylene bag
- 1/S ..... one piece packed in special pack
- 1/C ..... one piece packed in carton box
- 1/PP ..... one piece packed in paper and polyethylene bag
- 1/KP ..... one piece packed in polyethylene bag with cardboard
- 1/D ..... one piece packed in polyethylene-cushion bag
- 1/SB ..... one piece packed in shielding bag
- N/A ..... not available

P ..... PURPOSE
- A ..... ADD
- B ..... DELETE
- C ..... CHANGE
- D ..... QTY, CHANGE
- E ..... MISENTRY
- F ..... OMISSION

I ..... INTERCHANGEABILITY STATUS

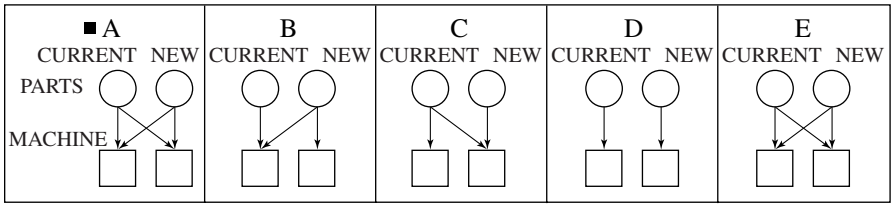

- ■ A ..... LAST SUFFIX IS CHANGED
- B.C.D.E ..... PART NUMBER IS CHANGED

2. HOW TO PLACE ORDER FOR PARTS

(1) The parts handled as service parts are only those with their "Q'TY/PACK" column listed with a quantity other than "N/A***" or "SUPPLY".
Those parts with "N/A***" are listed only for the purpose of showing the mechanical construction, those listed with "SUPPLY" are handled only as a sales item, and therefore both types of parts are not supplied as service parts.

(2) Orders for any parts which form a component of a semi-assembled unit are not acceptable.
Note: All the screws and nuts used are ISO standard.

3. REGION

NAD ..... 115V/60Hz, UL & CSA
TWD ..... 110V/60Hz, TAIWAN
SAD ..... 127V/60Hz, SAUDI ARABIA
ASD 220V
50/60Hz, ASIA, etc.
AUD ..... 240V/50Hz, AUSTRALIA
MJD 230-240V
50/60Hz, EUROPE
UKD 230-240V
50/60Hz, UNITED KINGDOM

NOTICE EXPLICATIVE DE LA LISTE DES PIECES DE RECHANGE

1. COMMENT UTILISER LA LISTE DES PIECES DE RECHANGE

(1) Nombre de pièces
Le nombre de pièces indiqué sur la liste est le nombre total de pièces utilisées pour chaque unité.
Toutefois, le nombre indequé sur la liste EMBALLAGE ACCESSOIRES est le nombre total de pièces utilisées pour chaque machine.

(2) Un paquest de vis indiqué sur la liste contient 50 vis.

(3) ABREVIATIONS

QTY ..... une pièce
PAC ..... un paquet

Q'TY/PAC
- 1/P ..... une pièce emballée dans un sac en polyéthylène
- 1/S ..... une pièce emballée dans un sac spécial
- 1/C ..... une pièce emballée dans une boîte en carton
- 1/PP ..... une pièce emballée dans un sac en papier et en polyéthylène
- 1/KP ..... une pièce emballée dans un sac en polyéthylène avec carton
- 1/D ..... une pièce emballée dans un sac rembourré en polyéthylène
- 1/SB ..... une pièce emballée dans
- N/A*** ..... non disponible

P ..... BUT

P
- A ..... AJOUTER
- B ..... SUPPRIMER
- C ..... MODIFIER
- D ..... CHANGEMENT DE QUANTITE
- E ..... INSCRIPTION ERRONEE
- F ..... OMISSION

I ..... INTERCHANGEABILITE

I

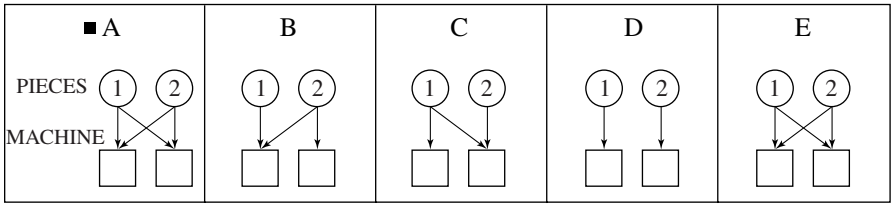

① ACTUELLE ② NOUVELLE
■ A ..... LE DERNIER SUFFIXE EST CHANGE
B.C.D.E ..... LE NOMBRE DE PIECES EST CHANGE

2. COMMENT COMMANDER LES PIECES

(1) Les pièces de rechange sont uniquement celles qui sont mentionnées dans la colonne "Q'TY/PACK" avec une quantité autre que "N/A***" ou "SUPPLY".
Le pièces dans la colonne "N/A***" sont mentionnées uniquement dans le but d'indiquer la construction mécanique. Les pièces dans la colonne "SUPPLY" sont detinées uniquement à la vente. Par conséquent, ces deux types de pièces ne sont pas fournies en tant que pièces de rechange.

(2) Les commandes de toute pièce formant un élément ou une unité semi-assemblée ne seront pas acceptées.
Nota: Toutes les vis et tours le écrous seront conformes au code ISO.

3. PAYS

NAD ..... 115V/60Hz, UL & CSA
TWD ..... 110V/60Hz, TAIWAN
SAD ..... 127V/60Hz, ARABIE SAOUDITE
ASD 220V
50/60Hz, ASIE, etc.
AUD ..... 240V/50Hz, AUSTRALIE
MJD 230-240V
50/60Hz, EUROPE
UKD 230-240V
50/60Hz, ROYAUME-UNI

ERKLÄRUNG DES ERSATZTEIL-KATALOGES

1. WIE LIEST MAN DIE TEILELISTE?

(1) Die Teileanzahl
Die Anzahl der Teile in der Liste, drücken die gesamten Teile pro Verpackungseinheit aus. Aber die Zahl in der Liste "Packing" (Verpackung) und "Accessory" (Zubehör) beschreibt die gesamte Teileanzahl pro Maschine.

(2) Eine Verpackungseinheit SCHRAUBEN enthält 50 stück.

(3) Abkürzungscode

QTY/PAC
- QTY ..... Stück
- PAC ..... Packung
- 1/P ..... ein Stück in einem Plastikbeutel
- 1/S ..... ein Stück in einer Spezialverpackung
- 1/C ..... ein Stück in einem Karton
- 1/PP ..... ein Stück in Papier und einem Plastikbeutel
- 1/KP ..... ein Stück in einem Plastikbeutel mit Pappdeckel
- 1/D ..... ein Stück in einem gepolsterten Plastikbeutel
- N/A ..... nicht lieferbar
- 1/SB ..... ein Stück in einer Schutzhülle

P
- P ..... Zweck
- A ..... Zusätzlich
- B ..... Entfernen
- C ..... Ändern
- D ..... Menge geändert
- E ..... Fehlangabe
- F ..... Weglassen

I
- I ..... Austauschbar untereinander

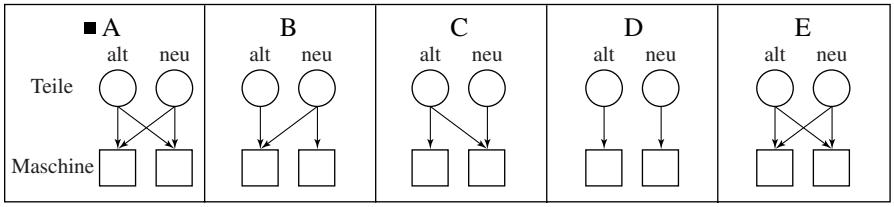

- ■ A ..... letzte Ziffer ist geändert
- B.C.D.E ..... Teilenummer ist geändert

2. WIE WERDEN ERSATZTEILE BESTELLT?

(1) Die Ersatzteile für den Service haben in der Spalte "QTY/PACK" eine Nummer.
Die Teile mit der Angabe "N/A***" shid nur aufgeführt, um die technische Konstruktion zu zeigen und sind einzeln nicht lieferbar.
Die Bezeichnung "SUPPLY" weist darauf hin, daß dieses Teil als Zubehör gehandelt wird und beim Verkauf bestellt werden muß.

(2) Bestellungen für Einzelteile, die einer Baueinheit angehören können nicht akzeptiert werden.
Hinweis: Alle Schrauben und Muttern werden nach dem ISO-Standard hergestellt.

3. REGION

NAD	115V/60Hz, UL & CSA
TWD	110V/60Hz, TAIWAN
SAD	127V/60Hz, SAUDI-ARABIEN
ASD	220V 50/60Hz, ASIEN, usw.
AUD	240V/50Hz, AUSTRALIEN
MJD	230-240V 50/60Hz, EUROPA
UKD	230-240V 50/60Hz, GROSSBRITANNIEN

SPIEGAZIONE DELLA LISTA DEI PEZZI DI RICAMBIO

1. COME LEGGERE LA LISTA DEI PEZZI DI RICAMBIO

(1) Numero dei pezzi
Il numero dei pezzi indica il totale dei pezzi per elemento. I numeri nella lista del materiale d'imballagio e accessori indicano il totale dei pezzi per macchina.

(2) Nella lista, un pacco di viti contiene 50 viti.

(3) ABBREVIAZIONI

QTY/PAC
- QTY ..... un pezzo
- PAC ..... un pacco
- 1/P ..... un pezzo imballato in sacco di polietilene
- 1/S ..... un pezzo imballato in pacco speciale
- 1/C ..... un pezzo imballato in scatola di cartone
- 1/PP ..... un pezzo imballato in sacco di polietillene e carta
- 1/KP ..... un pezzo imballato in sacco di polietilene con cartone
- 1/D ..... un pezzo imballato in sacco morbido di polietilene
- 1/SB ..... un pezzo imballato in sacco di protezione
- N/A ..... non disponibile

P
- P ..... scopo
- A ..... aggiunta
- B ..... annullamento
- C ..... modifica
- D ..... modifica QTY
- E ..... ingresso errato
- F ..... omissione

I ..... stato di intercambiabilità

I

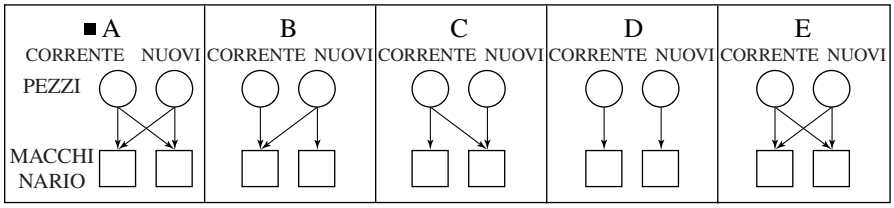

- ■A ..... modifica dell'ultimo suffisso
- B.C.D.E ..... modifica del numero di pezzo

2. ORDINAZIONE DEI PEZZI

(1) I pezzi usati come pezzi di ricambio sono elencati nella colonna "QTY/PACK" con una quantià differente da "N/A***" o "SUPPLY".
I pezzi con "N/A***" sono elencati solamente per mostrare la construzione meccanica e quelli con "SUPPLY" sono elencati solamente come articoli di vendità: cio significa che questi due tipi di pezzi non sono forniti come pezzi di recambio.

(2) L'ordinazione dei pezzi non viene accettata quando questi pezzi formano un componente di un messo elemento.
Nota: Tuttle le viti e i dadi sono standard ISO.

3. NAZIONE

NAD ..... 115V/60Hz, UL & CSA
TWD ..... 110V/60Hz, TAIWAN
SAD ..... 127V/60Hz, ARABIA SAUDITA
ASD 220V
50/60Hz, ASIA, ecc.
AUD ..... 240V/50Hz, AUSTRALIA
MJD 230-240V
50/60Hz, EUROPA
UKD 230-240V
50/60Hz, GRAN BRETAGNA

EXPLICACION DE LA LISTA DE PIEZAS DE SERVICIO

1. Cómo se lee la lista de piezas

(1) El número de piezas
El número de piezas en la lista especifica las plezas totales usada pou unidad, mientras que el número en la lista para METERIAL DE EMBALAJE y ACCESORIOS especifica las piezas totales usadas por máquina.

(2) En el paquete de tornillos se incluyen 50 unidades.

(3) Còdigos abreviados

QTY/PAC
- QTY ..... una pieza
- PAC ..... una paquete
- 1/P ..... una pieza empaquetada en la bolsa de politileno
- 1/S ..... una pieza empaquetada en paquete especial
- 1/C ..... una pieza empaquetada en caja de cartón
- 1/PP ..... una pieza empaquetada en papel y bolsa de politileno
- 1/KP ..... una pieza empaquetada en bolsa de politileno con cartón
- 1/D ..... una pieza empaquetada en bolsa almohadillada de politileno
- 1/SB ..... una pieza empaquetada en una
- N/A ..... bolsa protegida

P
- P ..... PROPOSITO
- A ..... AÑADIR
- B ..... BORRAR
- C ..... CAMBIO
- D ..... CANTIDAD, CAMBIO
- E ..... ENTRADA ERRONEA
- F ..... OMISION

I ..... SITUACION DE INTERCAMBIABILIDAD

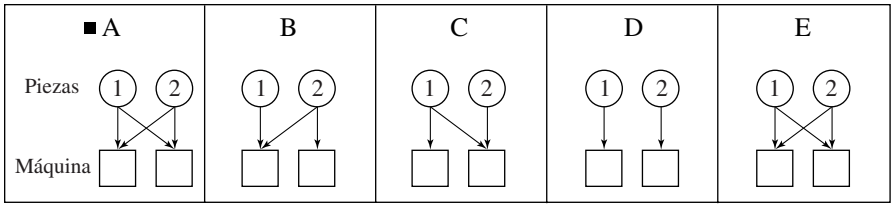

① Actualmente ② Nueva
- ■ A ..... El último sufijo ha cambiado
- B,C,D,E ..... Se ha cambiado el número de la pieza

2. Cómo realizar un pedido de piezas

(1) Las piezas consideradas como piezas de servicio son sólo aquellas designadas con Q'TY/PACK y no las designadas con N/A ... o SUPPLY.
Aquellas piezas con N/A ... se ponen en lista sólo con el propósito de monstrar la construcción mecánlca. Aquéllas piezas designadas bajo SUPPLY se consideran sólo como un artículo para ventas y por lo tanto ambos tipos de piezas no se consideran como piezas de servicio.

(2) Los pedidos para cualquler pieza que forme un componente de la unidad semiensamblada no será aceptados.
NOTA: todos los tornillos y tuercas son del estandar ISO.

3. PAISES

- NAD ..... 115V/60Hz, UL & CSA
- TWD ..... 110V/60Hz, TAIWAN
- SAD ..... 127V/60Hz, SAUDI ARABIA
- ASD ..... 220V 50/60Hz, ASIA, etc.
- AUD ..... 240V/50Hz, AUSTRALIA
- MJD ..... 230-240V 50/60Hz, EUROPA
- UKD ..... 230-240V 50/60Hz, GRAN BRETAÑA

CONTENTS

1. ASM-COVER (1)
2. ASM-COVER (2)
3. ASM-GLASS-PLTN
4. ASM-OPTICS-DRIVE (1)
5. ASM-OPTICS-DRIVE (2)
6. ASM-CONTROL-PANEL
7. ASM-CHARGER
8. ASM-EXIT
9. ASM-FUSER
10. ASM-ELECTRIC
11. ASM-MAIN-DRIVE
12. ASM-TRAY-UP
13. ASM-LVPS/LSU
14. ASM-DEV. MOTOR
15. ASM-GUIDE-P/U
16. ASM-GUIDE 2ND
17. ASM-FEEDER
18. ASM-CASSETTE
19. ASM-FRAME
20. SERVICE TOOLS
21. PM KIT
22. ASM-FUSER (DP2000/2500)
23. ASM-DRUM
24. ASM-DEVELOPER

51. PWA-MAIN (1/2)
52. PWA-MAIN (2/2)
53. PWA-RELAY
54. PWA-PIF

101. SUPPLIES

PARTS NUMBER INDEX

1. ASM-COVER (1) 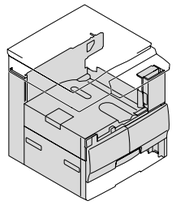	2. ASM-COVER (2) 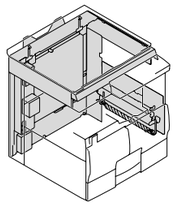	3. ASM-GLASS-PLTN 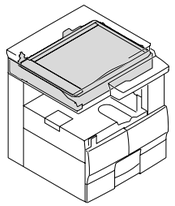	4. ASM-OPTICS-DRIVE (1) 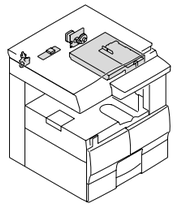	5. ASM-OPTICS-DRIVE (2) 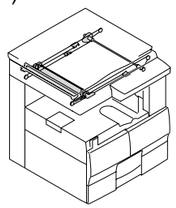	6. ASM-CONTROL-PANEL 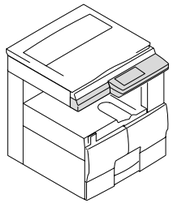	7. ASM-CHARGER 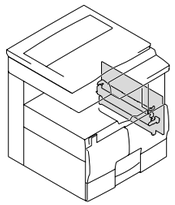
8. ASM-EXIT 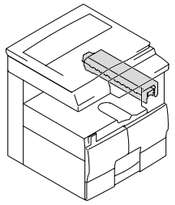	9. ASM-FUSER 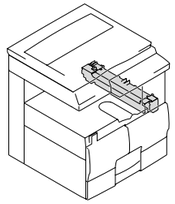	10.ASM-ELECTRIC 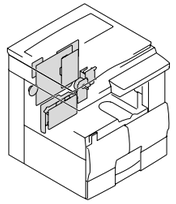	11.ASM-MAIN-DRIVE 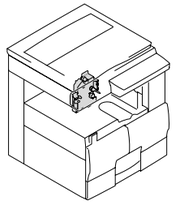	12.ASM-TRAY-UP 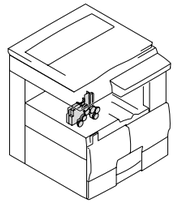	13.ASM-LVPS/LSU 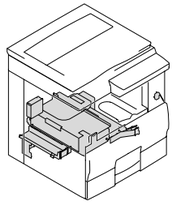	14.ASM-DEV. MOTOR 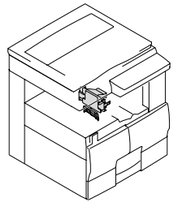
15.ASM-GUIDE-P/U 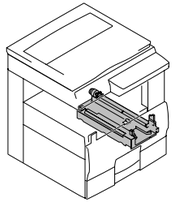	16.ASM-GUIDE 2ND 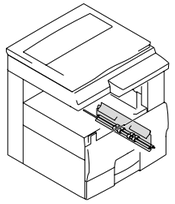	17.ASM-FEEDER 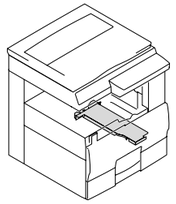	18.ASM-CASSETTE 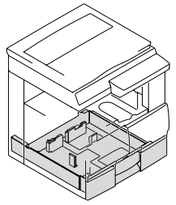	19.ASM-FRAME 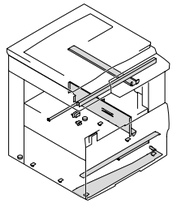		

ASM-COVER (1)

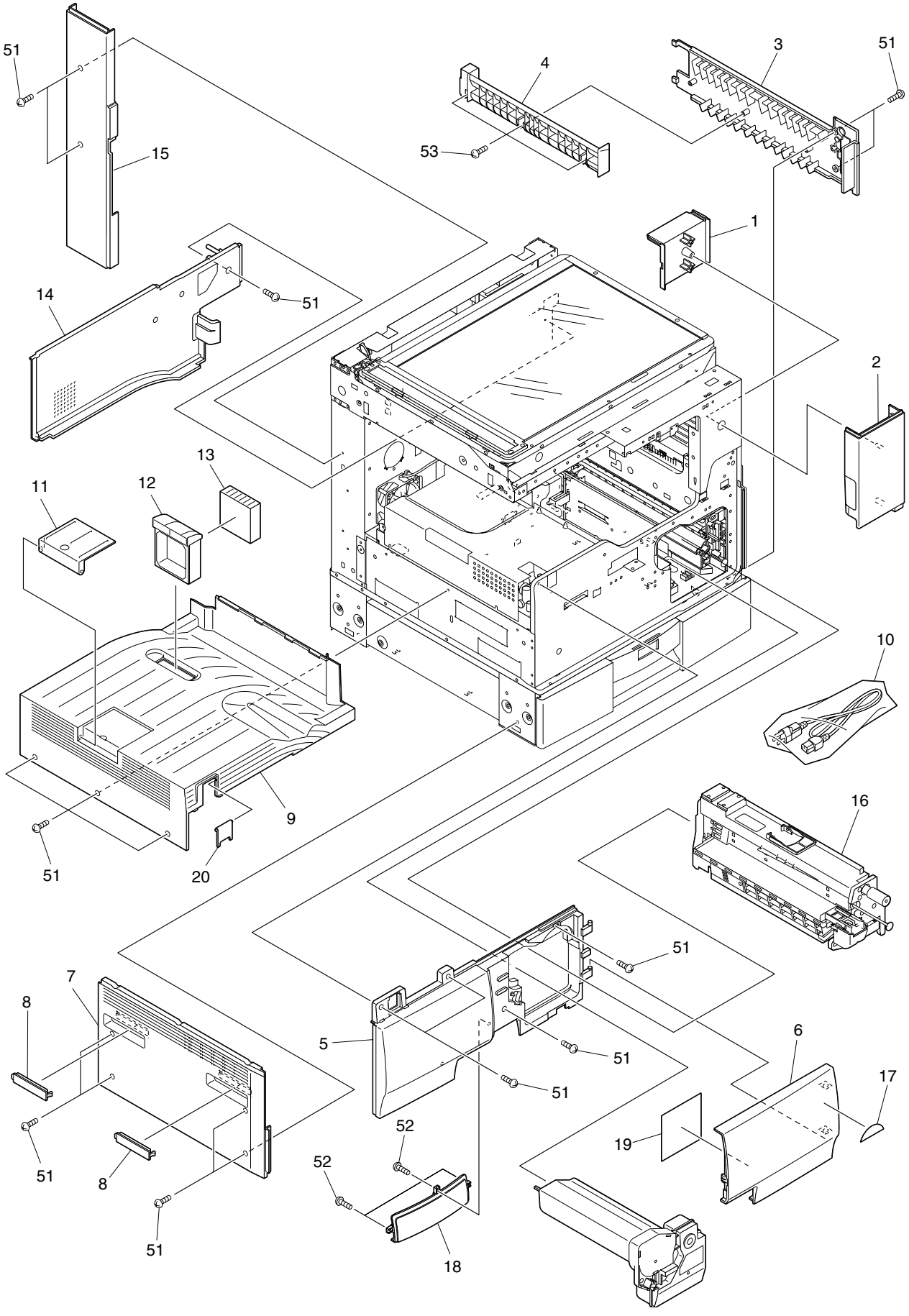
51
15
4
53
3
51
1
14
51
2
13
11
12
10
9
51
20
16
51
7
8
5
51
51
6
17
19
51
8
52
52
51
18

ITEM NO.	PARTS NO.	PARTS NAME	Q'TY / PAGE	Q'TY / PACK	P	I	R	BSI NO.	TO	T	FROM	SERIAL NO.	REMARKS	C
1	41306168000	COV-FRM-F-2	1	1/P										
2	41306176000	COV-FRM-F-1	1	1/PP										
3	41306178000	COV-GUIDE	1	1/PP										
4	41306019000	GUIDE-SFB-AT	1	1/P										
5	41304059000	K-COV-FRONT	1	1/PP					5A					
5A	41304059000	K-COV-FRONT	1	1/PP	-	-	-	G01C317			5		DP1600	
5B	41304059100	K-COV-FRONT	1	1/PP	A	-	J	G01C317					DP2000/2500	
6	41306175100	COV-OPEN-F	1	1/PP					6A					
6A	41306175100	COV-OPEN-F	1	1/PP	-	-	-	G01C317			6		DP1600	
6B	41306175200	COV-OPEN-F	1	1/PP	A	-	J	G01C317					DP2000	
6C	41306175300	COV-OPEN-F	1	1/PP	A	-	J	G01C317					DP2500	
6D	41306377000	COV-OPEN-S	1	1/PP	A	-	J	G01J733					DP1600S (NAD, MJD, AUD, ASD, SAD, TWD)	
6E	41306377100	COV-OPEN-S	1	1/PP	A	-	J	G01J733					DP2000S (NAD, MJD, AUD, ASD, SAD, TWD)	
6F	41306377200	COV-OPEN-S	1	1/PP	A	-	J	G01J733					DP2500S (NAD, MJD, AUD, ASD, SAD, TWD)	
7	41306180000	COV-LEFT	1	1/PP					7-1					
7-1	41304106000	K-COV-LEFT	1	1/PP	C	E	E	G01B269			7			
8	41306256000	LID-HANDLE-L	2	1/P										
9	41306182000	TRAY-PAPER	1	1/PP										
10A	4402449900	CBL/P-INLET-UC	1	1/P									NAD/SAD	
10B	4400395940	CBL/P-INLET-EUR	1	1/P									MJD/ASD	
10C	4400494940	CBL/P-INLET-AU	1	1/P									AUD	
10D	4402494070	CBL-INLET-CND	1	1/P									CND	
11	41306169000	STOP-PAPER	1	1/P										
12	41306035000	CASING-OZON-S	1	1/P										
13	41306746000	FILTER-OZON-S	1	1/PP										MSP
14	41306177000	COV-FRM-R	1	1/PP										
15	41306181000	COV-LEFT-R	1	1/PP					15-1					
15-1	41304107000	K-COV-LEFT-R	1	1/PP	C	E	E	G01B269			15			
16A	41303011300	PU-1600	1	1/S					16A-1 16F				NAD	PU
16A-1	41303033300	PU-1600N	1	1/S	C	B	J	G01C301			16A		NAD(except CANADA)	PU
16B	41303011400	PU-1600E	1	1/S					16B-1				MJD	PU
16B-1	41303033400	PU-1600EN	1	1/S	C	B	J	G01C301			16B		MJD	PU
16C	41303011200	PU-1600D	1	1/S					16C-1 16E				ASD/AUD/TWD/SAD	PU
16C-1	41303033200	PU-1600DN	1	1/S	C	B	J	G01C301			16C		AUD	PU
16D	41303011500	PU-1600C	1	1/S					16D-1				CND	PU
16D-1	41303033500	PU-1600CN	1	1/S	C	B	J	G01C301			16D		CND	PU
16E	41303033600	PU-1600DNN	1	1/S	C	B	J	G01C301			16C		ASD/TWD/SAD	PU
16F	41303033700	PU-1600CA	1	1/S	C	B	J	G01C301			16A		NAD(CANADA only)	PU
16G	41311008000	PU-1600S	1	1/S	F	-	J	G01K784					DP1600S/2000S/2500S (NAD)	PU
16H	41311008100	PU-1600DS	1	1/S	F	-	J	G01K784					DP1600S/2000S/2500S(ASD, AUD, TWD, SAD)	PU
16I	41311008300	PU-1600ES	1	1/S	F	-	J	G01K784					DP1600S/2000S/2500S (MJD)	PU
17	4406359320	LBL-ENERGY-T-PS	1	5/P	F	-	J	G01B232						
18	41306173000	COV-PANEL-F	1	1/PP										
19	41307591000	LBL/O-T/C-TSB	1	5/P					19-1					
19-1	41307700000	LBL/O-T/C-TSB	1	5/P	C	B	J	G01B283			19			
20	41306165000	LID-SW	1	1/P										
51	4842040685	TBID3008MSZN3A	16	50/P										
52	4842042077	TBIDP3008MSZN3A	3	50/P										
53	4842040846	PTBR30*08MSZN3A	3	50/P										

ASM-COVER (2)

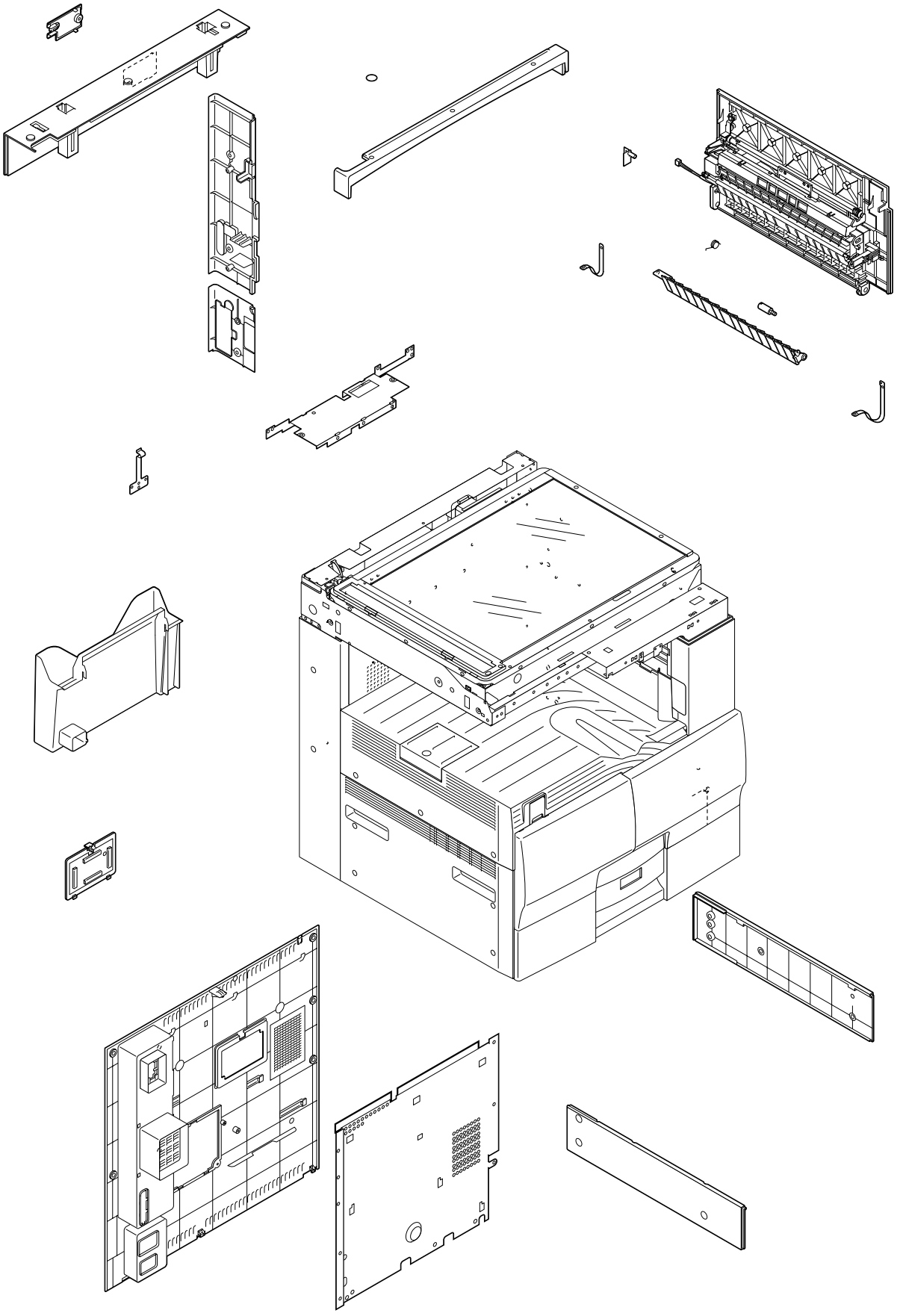

ITEM NO.	PARTS NO.	PARTS NAME	Q'TY / PAGE	Q'TY / PACK	P	I	R	BSI NO.	TO	T	FROM	SERIAL NO.	REMARKS	C
1	41306185000	COV-REAR	1	1/PP					1-1					
1-1	41304124000	K-COV-REAR	1	1/PP	C	B	E	G01C393	1-2		1			
1-2	41306376000	COV-REAR	1	1/PP	C	B	J	G01F522			1-1			
2	41304053000	K-LID-MEMORY	1	1/P					2A					
3	41306164000	LID-ADF	1	1/P					3-1					
3-1	41304103000	K-LID-ADF	1	1/P	C	E	E	G01B269			3			
4	41304045000	K-COV-TOP	1	1/PP										
5	41306221000	COV-SCANNER-F	1	1/PP										
6	41306179000	COV-RIGHT-R	1	1/PP					6-1 20	S				
6-1	41306362000	COV-RIGHT-RT	1	1/PP	C	E	J	G01C334			6			
7	41306186000	COV-TOP-R	1	1/PP					7-1					
7-1	41304104000	K-COV-TOP-R	1	1/PP	C	E	E	G01B269			7			
9	41304007000	K-PIN-GUIDE	1	1/P										
10	41306296000	STOPPER-REAR	1	1/P										
11	41306054000	FLAP-PAPER-B	1	1/P										
12	41304515000	PIN-GUIDE	1	5/P										
13	41306525000	STOPPER	1	1/P										
14	41305504000	SPL-ADF	1	1/P										
15	41305066000	SHIELD-PCB	1	1/P					15-1					
15-1	41305137100	SHIELD-PCB	1	1/PP	C	B	J	G01F522			15			
16	41306187000	COV-TOP-L	1	1/PP					16-1					
16-1	41304105000	K-COV-TOP-L	1	1/PP	C	E	E	G01B269			16			
17	41306249000	POCKET-MANUAL	1	1/PP										
18	41306710000	LID-SCREW-G	3	1/P										
19	41305566000	SPR-FLAP-B	1	5/P										
20	41306363000	COV-RIGHT-RB	1	1/PP	C	E	J	G01C334			6			
21A	41304133000	K-LID/M-PCON	1	1/P	A	-	J	G01F522					NAD, MJD, AUD, ASD, SAD, CND	
21B	41304125000	K-LID-MEMORY-2	1	1/P	F	-	J	G01J708					TWD	
22C	41307832000	LBL/O-TEL-TWD	1	5/P	A	-	J	G01J708					TWD	
51	4842040846	PTBR30*08MSZN3A	4	50/P										
52	4842040685	TBID3008MSZN3A	11	50/P					52-1					
52-1	4842040685	TBID3008MSZN3A	4	50/P	D	-	J	G01B232			52			
53	4842042077	TBIDP3008MSZN3A	1	50/P										
54	4842042065	TBIDS3008MSCR1A	29	50/P					54-1					
54-1	4842042065	TBIDS3008MSCR1A	21	50/P	D	-	E	G01C393	54-2		54			
54-2	4842042065	TBIDS3008MSCR1A	22	50/P	D	-	J	G01F522			54-1			
55	4842040370	TBID3006MSZN3L	7	50/P	F	-	J	G01B232						

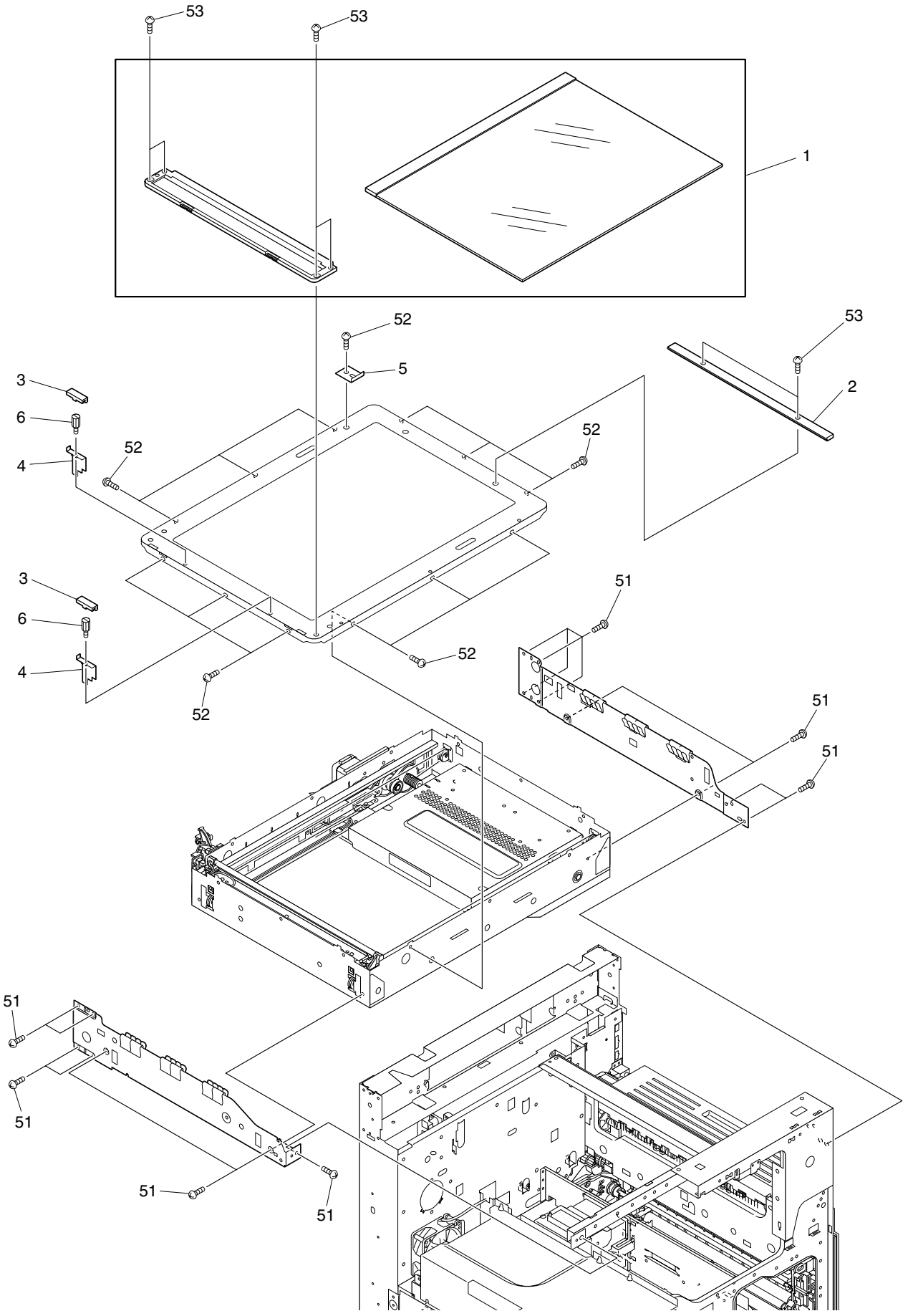
53
53
1
52
5
53
2
3
6
4
52
52
3
6
4
52
52
51
51
51
51
51
51
51
51

ITEM NO.	PARTS NO.	PARTS NAME	Q'TY / PAGE	Q'TY / PACK	P	I	R	BSI NO.	TO	T	FROM	SERIAL NO.	REMARKS	C
1A	41303665000	ASM-PG-G/P-INCH	1	1/C					1A-1				NAD	
1A-1	41307775100	ASM-PG-G/P-INCH	1	1/C	C	B	J	G01C347			1A		NAD	
1B	41303664000	ASM-PG-G/P-AB	1	1/C					1B-1				MJD, AUD, ASD, SAD	
1B-1	41307775000	ASM-PG-G/P-AB	1	1/C	C	B	J	G01C347			1B		MJD, AUD, ASD, SAD	
1C	41303666000	ASM-PG-G/P-ABK	1	1/C					1C-1				TWD/CND	
1C-1	41307775200	ASM-PG-G/P-ABK	1	1/C	C	B	J	G01C347			1C		TWD/CND	
2	41306801000	GUIDE-RIGHT	1	1/P										
3	41306804000	COVER-C-STOP	2	1/P										
4	41306791000	BKT-C-STOP	2	1/P										
5	41306793000	HOLD-GUIDE-REAR	1	1/P										
6	41314507000	SCREW-LOCK-CRG	2	10/P										
51	4842040685	TBID3008MSZN3A	15	50/P										
52	7043300515	BID30*05MSNI3CI	13	10/P										
53	7043300515	BID30*05MSNI3CI	6	10/P										

ASM-OPTICS-DRIVE (1)

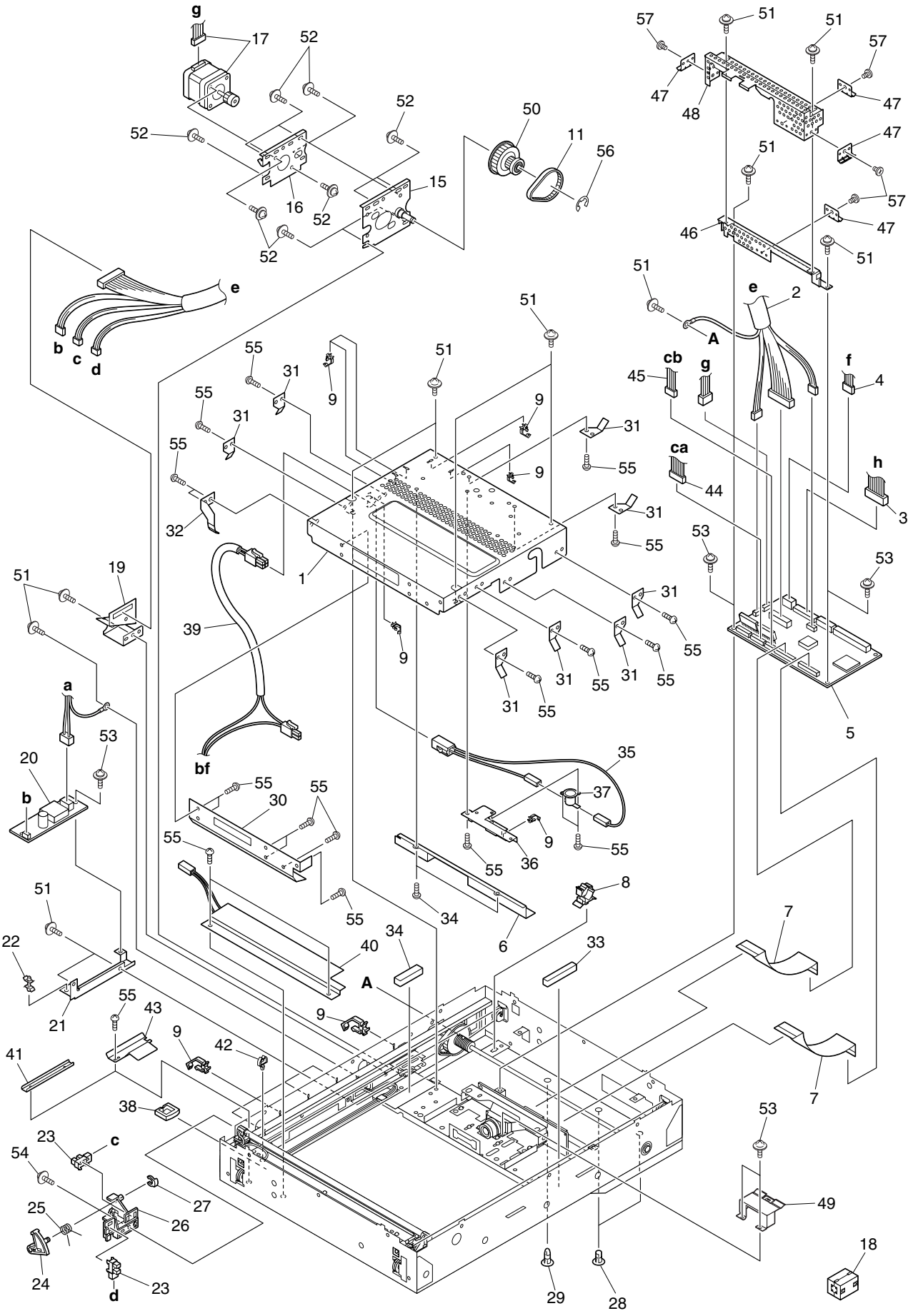

ITEM NO.	PARTS NO.	PARTS NAME	Q'TY / PAGE	Q'TY / PACK	P	I	R	BSI NO.	TO	T	FROM	SERIAL NO.	REMARKS	C
1	41306789000	COVER-SLG-AT	1	1/P					1A					
1A	41306789000	COVER-SLG-AT	1	1/P	-	-	-	G01C317	1A-1		1		DP1600	
1A-1	41307889000	COVER-SLG-AT	1	1/PP	C	B	F	G01I675			1A		DP1600	
1B	41313003000	COVER-SLG-AW	1	1/P	A	-	J	G01C317	1B-1				DP2000/2500	
1B-1	41314590000	COVER-SLG-AW	1	1/PP	C	B	F	G01I675			1B		DP2000/2500	
2	41301106000	WH-SCN-ADF-AT	1	1/P					2A					
2A	41301106000	WH-SCN-ADF-AT	1	1/P	-	-	-	G01C317			2		DP1600	
2B	41309018000	WH-SCN-ADF-AW	1	1/P	A	-	J	G01C317					DP2000/2500	
3	41301107000	WH-SCN-MAIN-AT	1	1/P										
4	41301108000	WH-SCN-PWR-AT	1	1/P										
5	41301105000	PWA-F-SLG-AT	1	1/SB					5A					
5A	41301105000	PWA-F-SLG-AT	1	1/SB	-	-	-	G01C317			5		DP1600	
5B	41309017000	PWA-F-SLG-AW	1	1/SB	A	-	J	G01C317					DP2000/2500	
6	41306787000	SFT-GUARD	1	1/P										
7	41301111000	PWB-F-CBL-AT	2	1/P					7A					
7A	41301111000	PWB-F-CBL-AT	2	1/P	-	-	-	G01J708			7		NAD, MJD, AUD, ASD, SAD, CND, DP1600(TWD)	
7F	41315505000	CBL/F-FCC-TW	2	1/P	F	-	J	G01J708					DP2500 TWD	
8	4843391672	CLP/W-CKT-13SV0	1	5/P										
9A	41301146000	CLP/W-RLMC-5TV0	5	5/P									NAD, MJD	
9B	41301146000	CLP/W-RLMC-5TV0	10	5/P									AUD, ASD, SAD, TWD/CND	
10	41306803000	FLANGE-S-PLY	1	1/P					10-1					
10-1	41306803000	FLANGE-S-PLY	0	1/P	B	-	J	G01I686			10			
11	41306827000	BELT-ST1095060	1	1/P										
12	4400921880	BRG-1260ZZ-4	1	1/P					12-1					
12-1	4400921880	BRG-1260ZZ-4	0	1/P	B	-	J	G01I686			12			
13	41306815000	PPS15M83/S15M33	1	1/P					13-1					
13-1	41306815000	PPS15M83/S15M33	0	1/P	B	-	J	G01I686			13			
14	4406363680	BRG-1680HH-F	1	1/P					14-1					
14-1	4406363680	BRG-1680HH-F	0	1/P	B	-	J	G01I686			14			
15	41306778000	K-BKT-DRV	1	1/P										
16	41306783000	BKT-MOT-S	1	1/P										
17	41301109000	M/P-SCN-AT	1	1/C										
18	41301156000	CORE-KCF-130BK	2	1/D										
19	41306792000	BKT-ADF	1	1/P										
20	41301113000	INV-EXPO-AT	1	1/C					20A					
20A	41301113000	INV-EXPO-AT	1	1/C	-	-	-	G01C317			20		DP1600	
20B	41309020000	INV-EXPO-AW	1	1/C	A	-	J	G01C317					DP2000/2500	
21	41306790000	BKT-INV-AT	1	1/P					21A					
21A	41306790000	BKT-INV-AT	1	1/P	-	-	-	G01C317			21		DP1600	
21B	41314505000	BKT-INV-AW	1	1/P	A	-	J	G01C317					DP2000/2500	
22	4843391432	PWB/Z-WLS-12-0	1	5/P										
23	3038646531	SCO-TLP1241(C5)	2	1/D										
24	41306795000	LVR-OPEN	1	1/P										
25	41306808000	SPRING-OPEN	1	1/P										
26	41306796000	BKT-OPEN	1	1/P										
27	41306829000	CLIP-4	1	5/P										
28	4843391476	PWB/Z-KGLS-8RF	1	5/P										
29	4843390843	PWZ-KGLS-8RT	2	5/P										
30	41301152000	PLT-NOISE-LR	1	1/P										
31	41301153000	PLT-NOISE-R	5	1/P					31A					
31A	41301153000	PLT-NOISE-R	5	1/P	-	-	-	G01J708			31		DP1600/2000, DP2500(NAD, MJD, AUD, ASD, SAD, CND)	
31F	41301153000	PLT-NOISE-R	8	1/P	F	-	J	G01J708					DP2500 TWD	
32	41301151000	PLT-NOISE-LF	1	1/P										
33	41301154000	GSKT-300286	1	1/P										
34	41301155000	GSKT-300278	1	1/P					34A					
34A	41301155000	GSKT-300278	1	1/P	-	-	-	G01C317			34		DP1600	
34B	41309023000	GSKT-300281	1	1/P	A	-	J	G01C317					DP2000/2500	
35	41301139000	WH-DHT-COVER-AT	1	1/P									AUD, ASD, SAD, TWD/CND	
36	41306831000	BKT-DH-L	1	1/P									AUD, ASD, SAD, TWD/CND	
37	41301114000	THEM-CS-7SA-AT	1	1/C									AUD, ASD, SAD, TWD/CND	
38	4843391164	BD/W-EDS-1717U	1	10/P										
39	41301110000	WH-DHT-RELAY-AT	1	1/P					39A				AUD, ASD, SAD, TWD/CND	
39A	41301110000	WH-DHT-RELAY-AT	1	1/P	-	-	-	G01C317			39		DP1600(AUD, ASD, SAD, TWD/CND)	
39B	41314506000	WH-DHT-RELAY-AW	1	1/P	A	-	J	G01C317					DP2000/2500(AUD, ASD, SAD, TWD/CND)	
40A	41301103000	K-DHT-SCN-115	1	1/D									SAD, TWD	
40B	41301104000	K-DHT-SCN-230	1	1/D									AUD, ASD, CND	
41	41307561000	SHEET-FILM-LOW	1	1/P					41A				AUD, ASD, SAD, TWD/CND	

ITEM NO.	PARTS NO.	PARTS NAME	Q'TY / PAGE	Q'TY / PACK	P	I	R	BSI NO.	TO	T	FROM	SERIAL NO.	REMARKS	C
41A	41307561000	SHEET-FILM-LOW	1	1/P	-	-	-	G01C317					DP1600	
41B	41307561000	SHEET-FILM-LOW	1	1/P	A	-	J	G01C317					DP2000/2500(NAD,MJD)	
42	41301145000	CLP/W-RLMC-1TV0	1	5/P	F	-	J	G01B232					AUD,ASD,SAD,TWD/CND	
43B	41307557000	PLT-NOISE-UR	1	1/P	A	-	J	G01C317					DP2000/2500(AUD,ASD,SAD,TWD/CND)	
44C	41301163000	WH-APS-2-LT-AW	1	1/P	A	-	J	G01C317					DP2000/2500(NAD)	
44D	41301162000	WH-APS-2-AB-AW	1	1/P	A	-	J	G01C317					DP2000/2500(MJD,AUD,ASD,SAD,TWD/CND)	
45C	41301161000	WH-APS-1-LT-AW	1	1/P	A	-	J	G01C317					DP2000/2500(NAD)	
45D	41301160000	WH-APS-1-AB-AW	1	1/P	A	-	J	G01C317					DP2000/2500(MJD,AUD,ASD,SAD,TWD/CND)	
46F	41315507000	BRKT-CCD-SHLD-C	1	1/P	A	-	J	G01J708					DP2500 TWD	
47F	41315504000	PL-CCD-SHLD-TW	4	1/P	A	-	J	G01J708					DP2500 TWD	
48F	41315509000	BRKT-CCD-SHLD-R	1	1/P	A	-	J	G01J708					DP2500 TWD	
49F	41315508000	BRKT-CCD-SHLD-F	1	1/P	A	-	J	G01J708					DP2500 TWD	
L61-.70A	41304143000	K-PLY-SCN	1	1/P	A	B	D	G01I686						
I686	4842040854	TPPAN3005MSZN3A	8	50/P					51A					
	4842040854	TPPAN3005MSZN3A	8	50/P	-	-	-	G01J708	51A-1		51		DP1600/2000,DP2500(NAD,MJD,AUD,ASD,SAD,CND)	
	4842040854	TPPAN3005MSZN3A	9	50/P	D	-	J	G01I686			51A		DP1600/2000,DP2500(NAD,MJD,AUD,ASD,SAD,CND)	
	4842040854	TPPAN3005MSZN3A	12	50/P	F	-	J	G01J708	51F-1				DP2500 TWD	
G0 1	4842040854	TPPAN3005MSZN3A	13	50/P	D	-	J	G01I686			51F		DP2500 TWD	
	41301150000	ZPAN30*05MSZN3L	9	50/P										
	7620300641	ZPAN30*06MSZN3A	3	50/P										
	4842040713	TPPAN3010MSZN3A	1	50/P										
	4842041799	SCREW-MR-M3-6	23	50/P										
	7405004031	ERR040SKZN3A	1	50/P										
	41315503000	SRW-34-TW	4	5/P	A	-	J	G01J708					DP2500 TWD	

ASM-OPTICS-DRIVE (2)

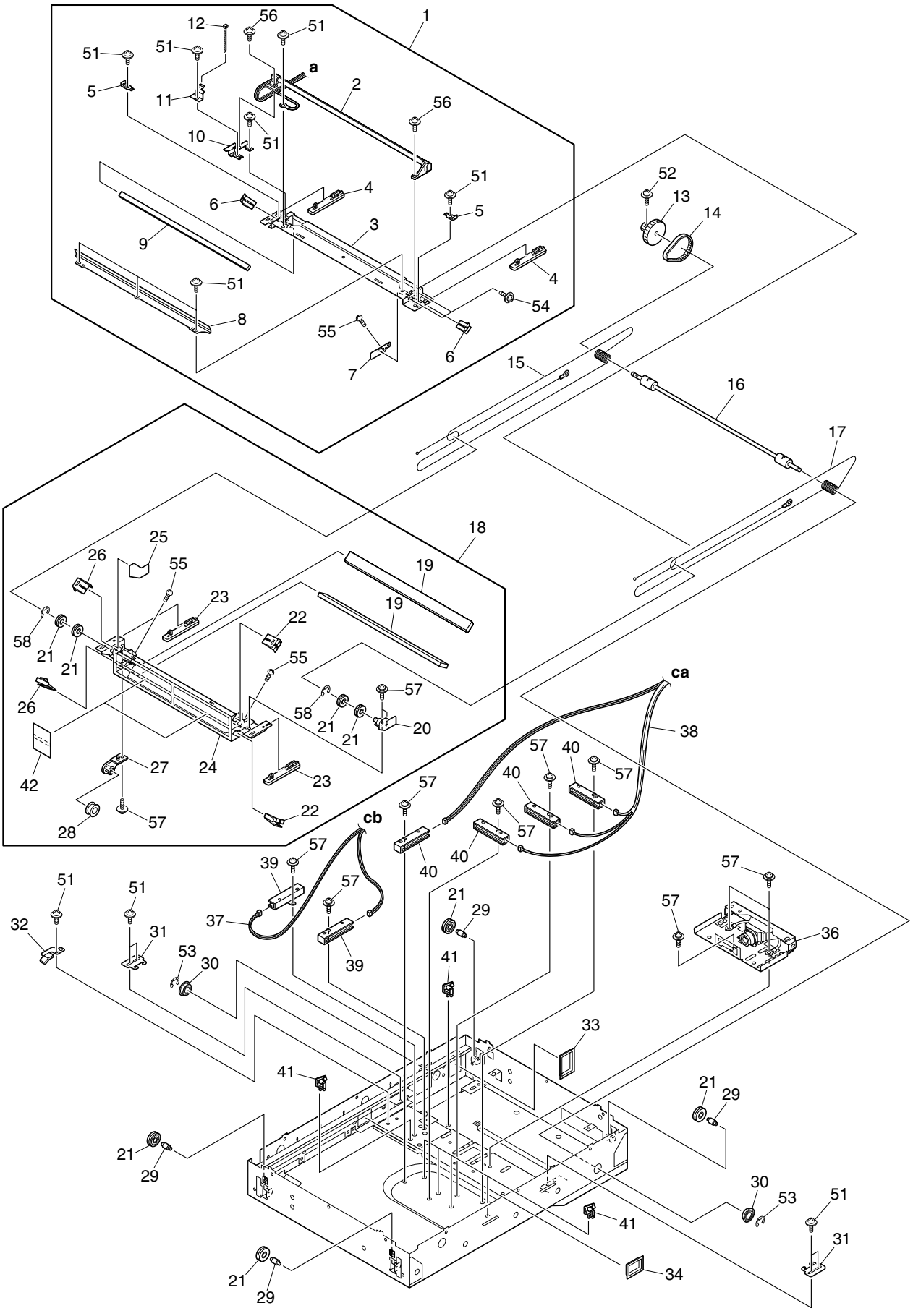

ITEM NO.	PARTS NO.	PARTS NAME	Q'TY / PAGE	Q'TY / PACK	P	I	R	BSI NO.	TO	T	FROM	SERIAL NO.	REMARKS	C
1	41303651000	ASM-PG-CRG-1	1	1/S					1A					
									1B					
1A	41303651000	ASM-PG-CRG-1	1	1/S	-	-	-	G01J735			1		DP1600	
1B	41311013000	ASM-PG-CRG1-AW	1	1/C	E	B	J	G01J735			1		DP2000/2500	
2	41301112000	LP-EXPO-AT	1	1/S					2A					
2A	41301112000	LP-EXPO-AT	1	1/S	-	-	-	G01C317			2		DP1600	
2B	41309019000	LP-EXPO-AW	1	1/C	A	-	J	G01C317					DP2000/2500	
3	41306774000	K-BASE-CRG-1	1	1/P										
4	41306797000	SLIDE-BUSH-CRG1	2	5/P										
5	41306785000	BKT-WIRE	2	1/P										
6	41306834000	SPL-MIRROR-1-F	2	1/P										
7	41306835000	BKT-AJ-CRG1	1	1/P										
8	41306784000	REFRECTER-XL	1	1/PP										
9	41303649000	ASM-PG-MIRROR-1	1	1/S										
10	41306786000	BKT-SENS	1	1/P										
11	41306794000	BKT-LH-HOLD	1	1/P										
12	4843391496	BD/W-SKB-8OMZ	1	10/P										
13	41306814000	PLY-T-S1.5M84	1	1/P										
14	41306828000	BELT-ST1105060	1	1/P										
15	41306810000	WIRE-Z-F	1	1/P										
16	41306807000	DRIVE-SFT-PLY	1	1/P										
17	41306811000	WIRE-S-B	1	1/P										
18	41303652000	ASM-PG-CRG-2	1	1/S					18-1					
18-1	41303687000	ASM-PG-CRG-2	1	1/S	C	B	J	G01B285			18			
19	41303650000	ASM-PG-MIRROR-2	2	1/S										
20	41306830000	SLIDER-CRG2-C	1	1/P										
21	41306813000	BRG-DV-19	8	1/P										
22	41306837000	SPL-MIRROR-2-F	2	1/P										
23	41306798000	SLIDE-BUSH-CRG2	2	5/P										
24	41306775000	K-BASE-CRG-2	1	1/P										
25	41306824000	SHEET-FILM-CABL	1	1/KP										
26	41306838000	SPL-MIRROR-2-R	2	1/P										
27	41306800000	BKT-TURN	1	1/P										
28	41306799000	PLY-TURN	1	1/P										
29	41306806000	SFT-DV	4	1/P										
30	4406363680	BRG-1680HH-F	2	1/P										
31	41306782000	BKT-WIRE-HOLD	2	1/P										
32	41306788000	BKT-HOLD-CBL	1	1/P					32-1					
32-1	41307903000	K-CBL-HOLD	1	1/P	C	B	D	G01I676			32			
33	41301144000	WR-Z-SB-4025	1	5/P										
34	41301147000	WR-Z-SB-2718	1	5/P										
35	41306812000	CUSHION-CBL	1	5/P					35-1					
35-1	41306812000	CUSHION-CBL	0	5/P	B	-	D	G01I676			35			
36	41303644000	ASM-PG-CCD-AS	1	1/S					36A					
36A	41303644000	ASM-PG-CCD-AS	1	1/S	-	-	-	G01C317			36		DP1600	
36B	41303645000	ASM-PG-CCD-AS-2	1	1/S	A	-	J	G01C317					DP2000/2500	
37C	41301161000	WH-APS-1-LT-AW	1	1/P	A	-	J	G01C317					DP2000/2500(NAD)	
37D	41301160000	WH-APS-1-AB-AW	1	1/P	A	-	J	G01C317					DP2000/2500(MJD, AUD, ASD, SAD, CND)	
38C	41301163000	WH-APS-2-LT-AW	1	1/P	A	-	J	G01C317					DP2000/2500(NAD)	
38D	41301162000	WH-APS-2-AB-AW	1	1/P	A	-	J	G01C317	38D-1				DP2000/2500(MJD, AUD, ASD, SAD, TWD/CND)	
38D-1	41301162000	WH-APS-2-AB-AW	1	1/P	-	-	-	G01J708			38D		DP2000/2500(MJD, AUD, ASD, SAD, CND)	
38F	41315506000	WH-APS-TW	1	1/P	F	-	J	G01J708					DP2500 TWD	
39C	4406379920	SNSR-PS-TY1CH56	2	1/D	A	-	J	G01C317					DP2000/2500(NAD)	
39D	4406379920	SNSR-PS-TY1CH56	1	1/D	A	-	J	G01C317					DP2000/2500(MJD, AUD, ASD, SAD, TWD/CND)	
40C	44205167000	SNSR-PS-TW05	3	1/C	A	-	J	G01C317					DP2000/2500(NAD)	
40D	44205167000	SNSR-PS-TW05	4	1/C	A	-	J	G01C317					DP2000/2500(MJD, AUD, ASD, SAD, TWD/CND)	
41B	41301146000	CLP/W-RLMC-5TV0	6	5/P	A	-	J	G01C317					DP2000/2500	
42	41307750000	FILM-CRG2	2	5/P	A	B	J	G01B285						
51	4842040854	TPPAN3005MSZN3A	13	50/P										
52	4842080212	ZPAN40*16MSZN3A	1	50/P										
53	7405007031	ERR070SKZN3A	2	50/P										
54	7640200651	ZPAN20*06MSZN3A	2	10/P										
55	41306832000	SRW-020080	3	5/P										
56	41301150000	ZPAN30*05MSZN3L	2	50/P										
57	7620300641	ZPAN30*06MSZN3A	6	50/P					57A					
57A	7620300641	ZPAN30*06MSZN3A	6	50/P	-	-	-	G01C317			57		DP1600	

ITEM NO.	PARTS NO.	PARTS NAME	Q'TY / PAGE	Q'TY / PACK	P	I	R	BSI NO.	TO	T	FROM	SERIAL NO.	REMARKS	C
57B	7620300641	ZPAN30*06MSZN3A	12	50/P	A	-	J	G01C317					DP2000/2500	
58	7405004031	ERR040SKZN3A	2	50/P										

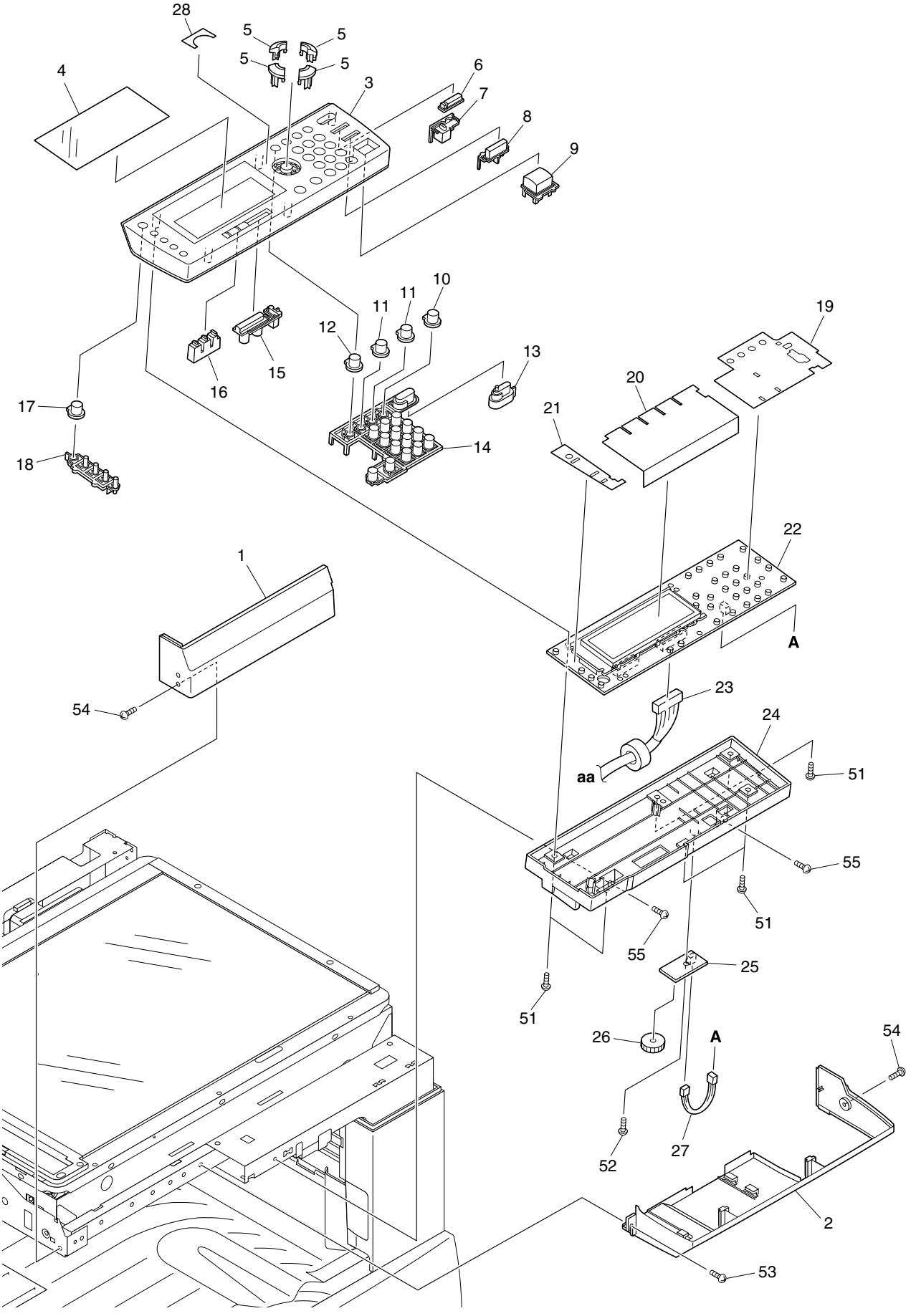
28
5
5
5
5
4
3
6
7
8
9
10
11
11
12
13
14
15
16
17
18
19
20
21
22
A
1
54
23
24
aa
51
55
51
55
25
51
26
A
54
52
27
2
53

ITEM NO.	PARTS NO.	PARTS NAME	Q'TY / PAGE	Q'TY / PACK	P	I	R	BSI NO.	TO	T	FROM	SERIAL NO.	REMARKS	C
1	41306223000	COV-ONT-AT5	1	1/PP					1-1					
1-1	41304109000	K-COV-ONT-AT5	1	1/PP	C	E	E	G01B269			1			
2-1	41306351000	COV-OPE-LOW	1	1/PP										
3	41306195000	COV-OPE-TOP	1	1/PP					3A					
3A	41306195000	COV-OPE-TOP	1	1/PP	-	-	-	G01J708			3		NAD, MJD, AUD, ASD, SAD, CND	
3C	41306195200	COV-OPE-TOP	1	1/PP	F	-	J	G01J708					TWD	
4	41306203000	COV-LCD	1	1/D										
5	41306202000	KEY-CROSS	4	1/D										
6	41306209000	KEY-FNC-CLR	1	1/D										
7	41306211000	COV-LCD-FNC-CLR	1	1/D										
8	41306207000	KEY-STOP	1	1/D										
9	41306205000	KEY-START	1	1/D										
10	41306215200	COV-LCD-FNC	1	1/P										
11	41306215000	COV-LCD-FNC	2	1/P					11A					
11A	41306215000	COV-LCD-FNC	2	1/P	-	-	-	G01J708			11		NAD, MJD, AUD, ASD, SAD, CND	
11C	41306215000	COV-LCD-FNC	1	1/P	D	-	J	G01J708					TWD	
12	41306215300	COV-LCD-FNC	1	1/P										
13	41306200000	COV-LCD-POWER	1	1/D										
14	41306198000	KEY-TEN	1	1/D										
15	41306213000	KEY-TYPE	1	1/D										
16	41306212000	COV-LCD-TYPE	1	1/D										
17	41306215400	COV-LCD-FNC	1	1/P										
18	41306214000	KEY-COPY	1	1/D										
19	41306589000	FILM-SW-OPE	1	1/KP										
20	41306590000	FILM-LCD	1	1/C										
21	41306591000	FILM-SW-COPY	1	1/KP										
22	41300525000	PWA-F-PNL-TO-AT	1	1/SB					22A					
22A	41300525000	PWA-F-PNL-TO-AT	1	1/SB	-	-	-	G01J708			22		DP1600(except TWD), DP2000/2500	
22B	41300551000	PWA-F-PNL-TO-TW	1	1/SB	F	-	J	G01J708					DP1600 TWD	
23	41301060000	WH-OPE-AT	1	1/P										
24	41306216000	HOLDER-OPE-TOP	1	1/P										
25	41300511000	PWA-F-LCD-VR-AT	1	1/SB					25-1					
25-1	41300511100	PWA-F-LCD-VR-AT	1	1/SB	C	B	J	G01F524			25			
26	41306218000	COV-LCD-VOLUME	1	1/P										
27	41301048000	WH-OPE-VR-AT	1	1/P										
51	4842042066	TBIDP3012MSZN3A	6	50/P										
52	4842042077	TBIDP3008MSZN3A	1	50/P										
53	4842040685	TBID3008MSZN3A	1	50/P										
54	7043300515	BID30*05MSNI3CI	2	10/P										
55	4842040691	TZPAN3008MSZN3A	2	50/P										

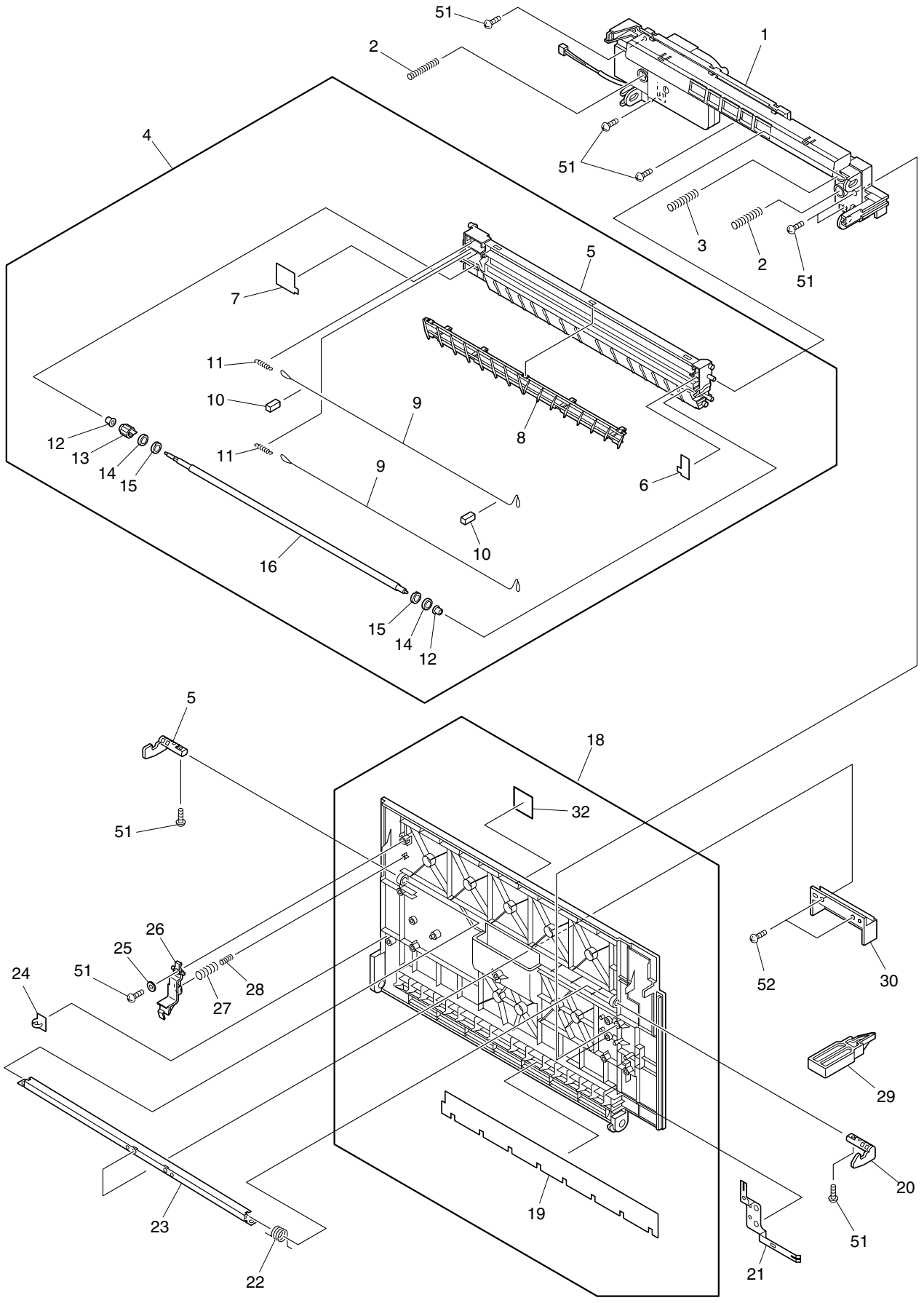
51
2
1
4
51
3
2
51
5
7
11
10
9
8
12
13
14
15
11
9
6
10
16
15
14
12
5
18
32
51
26
25
24
51
28
27
52
30
29
20
23
19
51
22
21

ITEM NO.	PARTS NO.	PARTS NAME	Q'TY / PAGE	Q'TY / PACK	P	I	R	BSI NO.	TO	T	FROM	SERIAL NO.	REMARKS	C
1	41303518000	ASM-GIDE-PAPER	1	1/C										
2	41305512000	SPC-TC	2	1/P					2-1					
2-1	41305578000	SPC-TC	2	1/P	C	B	J	G01C394			2			
3	41305547000	SPC-DC	1	1/P										
4	41303636000	MAIN-CH-1600	1	1/S										USP
5	41304035000	K-HOLDER-TC	1	1/P										
6	41306528000	SHEET-DEFENSE-R	1	1/P										MSP
7	41306529000	SHEET-DEFENSE-F	1	1/P										MSP
8-1	41306352000	GUIDE-TC	1	1/P										
9	41304008000	WIRE-TC	2	1/P										MSP
10	41306712000	DAMPER	2	5/P										
11	41305548000	SPE-WIRE-FED3	2	5/P										
12	41306677000	BUSH-RLR-GUIDE	2	1/P										MSP
13	41306272000	GEAR-RLR-GUIDE	1	1/P										MSP
14	41306323000	COLLER-DRUM	2	5/P										
15	41306301000	COLLER-RLR-GUID	2	5/P										
16	41306530000	ROLLER-GUIDE	1	1/KP										MSP
17	41306050000	HOOK-R	1	1/P										
18	41304083000	K-CVR-SR-S	1	1/PP										
19	41306961000	SHEET-COV-SIDE	1	1/KP										
20	41306051000	HOOK-F	1	1/P										
21	41305513000	PL-CH-EARTH	1	1/P										
22	41305511000	SPR-HOOK	1	5/P										
23	41305042000	PL-HOOK	1	1/P										
24	4843391726	CLP/W-K-103G	1	5/P										
25	41306293000	WAS-PUSH-SHTR	1	10/P										
26	41306295000	LEVER-PUSH-SHTR	1	1/P										
27	41305551000	SPC-LVR-PUSH-A	1	5/P										
28	41305561000	SPC-LVR-PUSH-B	1	5/P										
29	41304046000	K-KIT-CLN(TSB)	1	1/P										
30	41306052000	HOOK-LEVER	1	1/P										
32	44204540000	LBL-JAM-1	1	5/P										
51	4842040846	PTBR30*08MSZN3A	8	50/P					51-1					
51-1	4842042077	TBIDP3008MSZN3A	8	50/P	C	B	D	G01K760			51			
52	4842040685	TBID3008MSZN3A	2	50/P										

ASM-EXIT

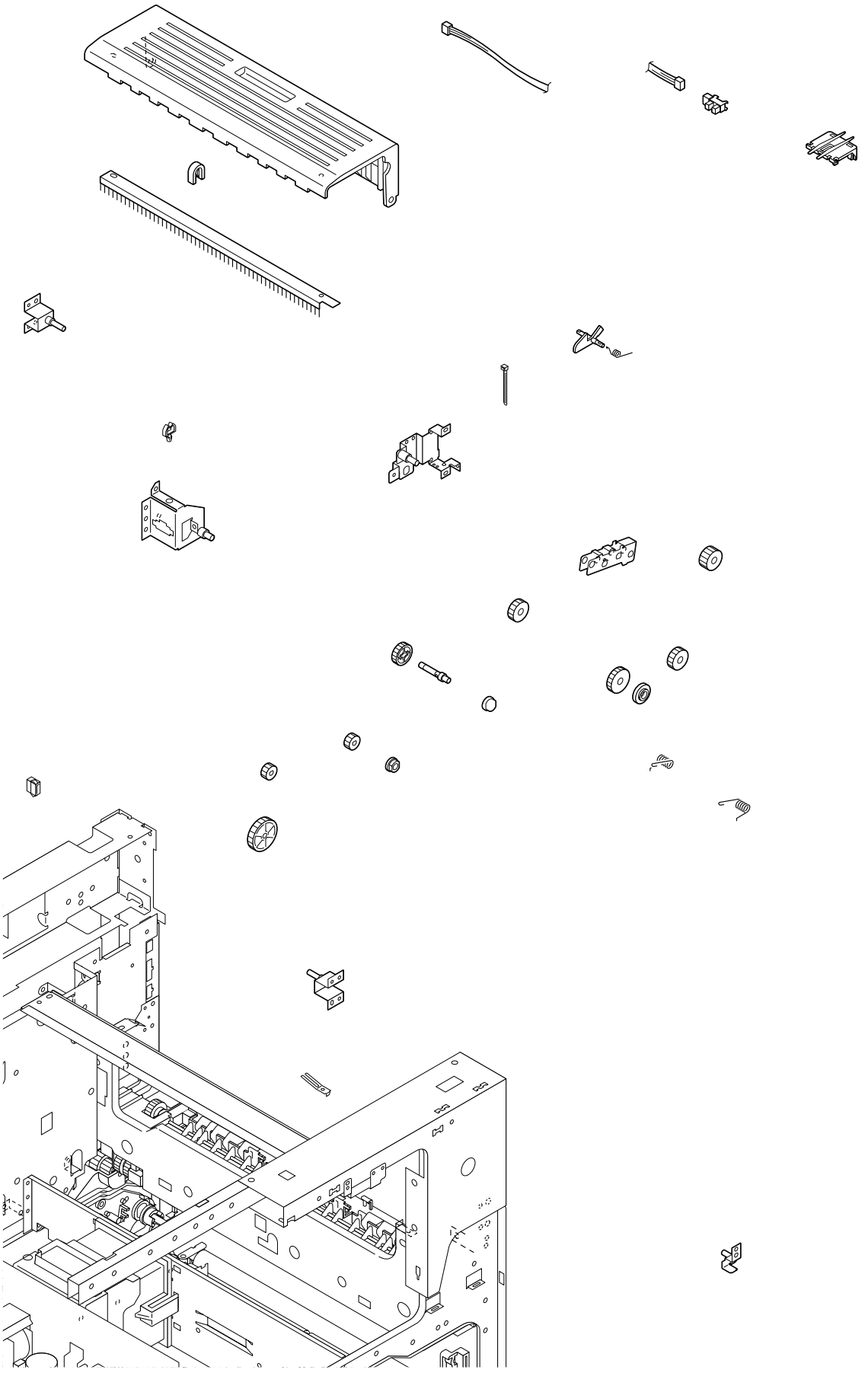

ITEM NO.	PARTS NO.	PARTS NAME	Q'TY / PAGE	Q'TY / PACK	P	I	R	BSI NO.	TO	T	FROM	SERIAL NO.	REMARKS	C
1	41306348000	CVR-EXIT-UNIT	1	1/PP										
2-1	41307652000	K-BRUSH-EXIT	1	1/KP										
3	4407972860	STOP-RING-6-5	2	5/P										
4	41304009000	K-BRKT-STUD-ADU	2	1/P										
5	41301080000	WH-FDS2-STH-AT	1	1/P										
6	41301070000	WH-FDS2-AT	1	1/P										
7	4401983230	SZ-LG248L1	1	1/C										
8	41306157000	CVR-EXIT-GUIDE	1	1/P										
9	41304541000	SHAFT-GATE	2	1/P										
10	41304031000	K-GUIDE-EXIT-1	1	1/C										
11	41306328000	GUIDE-EXIT-JOIN	1	1/P										
12	41306152000	GEAR-DRV-EXIT-5	1	1/P										
13	41304557000	SFT-EXIT-JOIN-2	1	1/P										
14	41304556000	SFT-EXIT-JOIN-1	2	1/P										
15	41305105000	BRKT-JOINT-EXIT	1	1/P										
16	41306156000	GATE-EXIT	12	1/P					16A					
16A	41306156000	GATE-EXIT	12	1/P	-	-	-	G01C317			16		DP1600	
16B	41306357000	GATE-EXIT-AW	10	1/P	A	-	J	G01C317					DP2000/2500	
17	41305538000	SPRING-ACTR	1	5/P										
18	41306147000	ACTR-EXIT-SENS	1	1/P					18A					
18A	41306147000	ACTR-EXIT-SENS	1	1/P	-	-	-	G01C317			18		DP1600	
18B	41306359000	ACTR-EXT-SEN-AW	1	1/P	A	-	J	G01C317					DP2000/2500	
19	41305559000	SPRING-DRV-FR-2	1	5/P										
20	41306150000	GEAR-DR-EXIT2/4	2	1/P										
21	41306153000	ROL-GUIDE-2	1	1/P										
22	41306151000	GEAR-DRV-EXIT-3	1	1/P										
23	41305107000	BRKT-JOINT-SPRT	1	1/P										
24	41304055000	K-BRKT-RE-EXIT	1	1/P										
25	4843391730	WIRE/B-T18R	2	5/P										
26	4843391006	CLP/W-UAMS-02-0	1	5/P										
27	41304029000	K-BRKT-EXIT-CON	1	1/P										
28	44201492000	BUSH-6-POM	4	5/P										
29	4408636730	CLUTCH-6-08R	1	1/D										
30	41306303000	GEAR-EXIT-9	1	1/P										
31	41306302000	GEAR-EXIT-8	1	1/P										
32	4842904035	HPIN20/10SUSH7	1	50/P										
33	41304549000	SFT-CLH-EXIT	1	1/P										
34	41306154000	ROL-GUIDE-1	1	1/P										
35	41306149000	GEAR-DRV-EXIT-1	1	1/P										
36	41305540000	SPRING-EXIT-R-1	1	5/P					36A					
36A	41305540000	SPRING-EXIT-R-1	1	5/P	-	-	-	G01C317			36		DP1600	
36B	41313504000	SPRING-EXIT-R-2	1	5/P	A	-	J	G01C317					DP2000/2500	
37	41305539000	SPRING-EXIT-F-1	1	5/P					37A					
37A	41305539000	SPRING-EXIT-F-1	1	5/P	-	-	-	G01C317			37		DP1600	
37B	41313503000	SPRING-EXIT-F-2	1	5/P	A	-	J	G01C317					DP2000/2500	
38	41304030000	K-GUIDE-EXIT-2	1	1/P					38A					
38A	41304030000	K-GUIDE-EXIT-2	1	1/P	-	-	-	G01C317			38		DP1600	
38B	41304100000	K-GUIDE-EX-2-AW	1	1/P	A	-	J	G01C317					DP2000/2500	
39	41304564000	SFT-EXIT-FR	1	1/P					39A					
39A	41304564000	SFT-EXIT-FR	1	1/P	-	-	-	G01C317	39A-1		39		DP1600	
39A-1	41304566000	SFT-EXIT-FR	1	1/P	C	B	F	G01C324			39A		DP1600	
39B	41304566000	SFT-EXIT-FR	1	1/P	A	-	J	G01C317					DP2000/2500	
40	41306148000	ROLLER-EXIT	4	1/P										
41	41304544000	SFT-EXIT	1	1/P										
42	41304028000	K-BRKT-FR-EXIT	1	1/P										
43	41304060000	K-ROLLER-EXIT	1	1/KP					43A					
43A	41304060000	K-ROLLER-EXIT	1	1/KP	-	-	-	G01C317			43		DP1600	
43B	41304102000	K-RLR-EXIT-AW	1	1/KP	A	-	J	G01C317					DP2000/2500	
44	41306336000	GEAR-DRV-EX-JSP	1	1/P										
45	4842904019	HPIN20/08SUSH7	1	50/P										
46	41306160000	GEAR-DRV-EXIT-7	1	1/P										
47	4401774650	SPL-GUIDE-P-2	1	1/P										
48	44204542000	LBL-JAM-2	1	5/P										
49B	41306358000	GATE-EXIT-AW-2	2	1/P	A	-	J	G01C317					DP2000/2500	
50B	41306354000	HLDR-RLR-EXIT-F	2	1/P	A	-	J	G01C317					DP2000/2500	
51B	41306355000	HLDR-RLR-EXIT-R	2	1/P	A	-	J	G01C317					DP2000/2500	
52B	41306356000	RLR-GUIDE-EXIT	8	1/P	A	-	J	G01C317					DP2000/2500	
53B	41314540000	BRG-L-106ZZLY13	2	1/P	A	-	J	G01C317					DP2000/2500	
54B	41306364000	BUSH-RLR-EXIT	2	5/P	A	-	J	G01C317					DP2000/2500	
101	4842040495	PTBR30*06MSZN3A	2	50/P										

ITEM NO.	PARTS NO.	PARTS NAME	Q'TY / PAGE	Q'TY / PACK	P	I	R	BSI NO.	TO	T	FROM	SERIAL NO.	REMARKS	C
102	4842080198	ZPAN30*08MSZN3C	6	50/P										
103	4842040685	TBID3008MSZN3A	6	50/P										
104	4842040683	TBID30*06MSZN3A	2	50/P										
105	4842090313	ERR060SKZN3A	3	50/P										
106	4842090310	ERR030SKZN3A	4	50/P										
107	4842090312	ERR050SKZN3A	6	50/P										
108	4842040370	TBID3006MSZN3L	5	50/P										
109B	4842040846	PTBR30*08MSZN3A	4	50/P	A	-	J	G01C317					DP2000/2500	
110B	4842090311	ERR040SKZN3A	2	50/P	A	-	J	G01C317					DP2000/2500	

ASM-FUSER (DP1600)

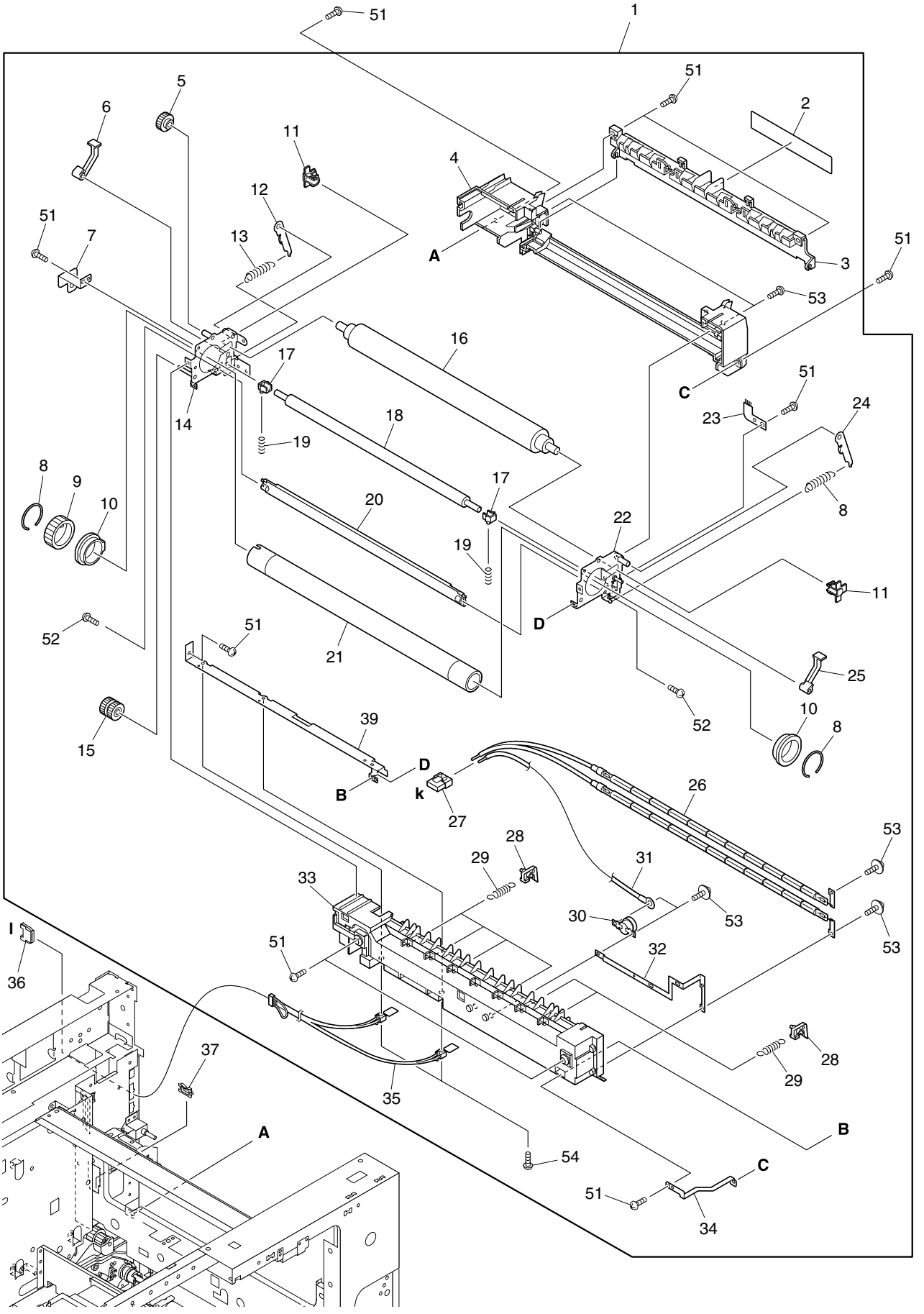

ITEM NO.	PARTS NO.	PARTS NAME	Q'TY / PAGE	Q'TY / PACK	P	I	R	BSI NO.	TO	T	FROM	SERIAL NO.	REMARKS	C
1A	41303607000	FUSER-1600-120	1	1/S					1A-1				DP1600(120V)	USP
1A-1	41303607000	FUSER-1600-120	1	1/S	-	-	-	G01J708	1A-2		1A		DP1600(NAD, AUD, ASD, SAD, CND)	USP
1A-2	41303715300	FUSER-1600-120	1	1/S	C	B	D	G01K772			1A-1		DP1600(NAD, AUD, ASD, SAD, CND)	USP
1B	41303607100	FUSER-1600-240	1	1/S					1B-1				DP1600(220V)	USP
1B-1	41303715400	FUSER-1600-240	1	1/S	C	B	D	G01K772			1B		DP1600(220V)	USP
1C	41303607800	FUSER-1600-TW	1	1/S	F	-	J	G01J708	1C-1				DP1600 TWD	USP
1C-1	41303715500	FUSER-1600-TWD	1	1/S	C	B	D	G01K772			1C		DP1600 TWD	USP
2	41307590000	LBL/O-JAM-TSB	1	5/P					2A				DP1600	
2A	41307590000	LBL/O-JAM-TSB	1	5/P	-	-	-	G01J708			2		DP1600	
													NAD, MJD, AUD, ASD, SAD, CND	
2C	41307833000	LBL/O-JAM-TWD	1	5/P	F	-	J	G01J708					DP1600 TWD	
3	41306258100	COVER-PR	1	1/PP					3-1				DP1600	
3-1	41314021000	COVER-PR-AW	1	1/PP	C	B	D	G01J719			3		DP1600	
4	41304037100	K-HSG-PR/RLR	1	1/C									DP1600	
5	41306061000	GEAR-HR/EXIT	1	1/P									DP1600	
6	41306063000	LEVER-PR-R	1	1/P									DP1600	
7	41305046000	BRKT-HTR	1	1/P									DP1600	
8	41305515000	CRR-HT/RLR	2	5/P									DP1600	
9	41306341000	GEAR-HR/RLR	1	1/P									DP1600	
10	41306059000	BUSH-HR/RLR	2	1/P									DP1600	MSP
11-1	41306360000	BUSH-PR-RLR	2	5/P									DP1600	
12-1	41305128000	PLATE-LVR-R	1	1/P									DP1600	
13	41305517000	SPE-PR30-200	2	1/P									DP1600	
14	41304011000	K-FRAME-HR-R	1	1/P									DP1600	
15	41306065000	GEAR-HT/IDLE	1	1/P									DP1600	MSP
16	41303608000	HR-1600-L	1	1/S									DP1600	CSP
17	41306058000	BUSH-CL-RLR	2	1/P									DP1600	MSP
18	41304523000	RLR-FUS-CLN	1	1/KP									DP1600	MSP
19	41305514000	SPC-CL-300	2	1/P					19-1				DP1600	
19-1	41305582000	SPC-CL-500	2	1/P	C	B	D	G01K772			19		DP1600	
20	41306066000	GUIDE-PR/RLR	1	1/P					20-1				DP1600	
21	41303609000	HR-1600-U	1	1/S									DP1600	CSP
22	41304012000	K-FRAME-HR-F	1	1/P									DP1600	
23	41306533000	BRUSH-FUSER-P	1	1/KP									DP1600	
24-1	41305127000	PLATE-LVR-F	1	1/P									DP1600	
25	41306062000	LEVER-PR-F	1	1/P									DP1600	
26A	41303610000	ASM-PG-HTR-S	1	1/S									DP1600(120V)	
26B	41303610100	ASM-PG-HTR-S	1	1/S									DP1600(220V)	
27	4843309864	J-VLP-03V	1	5/P									DP1600	
28	41306067000	SEP-HT/RLR	6	6/P									DP1600	MSP
29	41305516000	SPE-CLW	6	5/P									DP1600	
30	41306532000	THERMO-FUSER	1	1/C					30-1				DP1600	
30-1	44205189000	THRM-CS-7TA-190	1	1/D	C	B	A	G01E477			30		DP1600	
31	41301030000	WH-HTRLMP-AT	1	1/P									DP1600	
32	41305518000	SPL-THERMO	1	1/P									DP1600	
33	41304036000	K-HSG-HR/RLR	1	1/C									DP1600	
34	41305047000	SPL-FRAME-F	1	1/P					34-1				DP1600	
34-1	41304144000	K-SPL-EARTH-AT	1	1/P	C	B	D	G01J747			34		DP1600	
35	41309012000	THMS-HTR-25	1	1/C									DP1600	
36	41301080000	WH-FDS2-STH-AT	1	1/P									DP1600	
37	4843390942	BD/W-EDS-2	1	10/P									DP1600	
38	41307511000	SHEET-FUS	1	1/KP					38-1				DP1600	
38-1	41307511000	SHEET-FUS	0	1/KP	B	-	D	G01K772			38		DP1600	
39	41305104000	STAY-HF-SENSOR	1	1/P					39-1				DP1600	
51	4842040685	TBID3008MSZN3A	9	50/P					51-1					
51-1	4842040370	TBID3006MSZN3L	9	50/P	E	B	J	G01B232			51		DP1600	
52	4842040846	PTBR30*08MSZN3A	2	50/P									DP1600	
53A	4842080197	ZPAN30*06MSZN3A	5	50/P									DP1600(120V)	
53B	4842080197	ZPAN30*06MSZN3A	6	50/P									DP1600(220V)	
54	4842042097	TBIDS2608MSZN3A	2	50/P									DP1600	

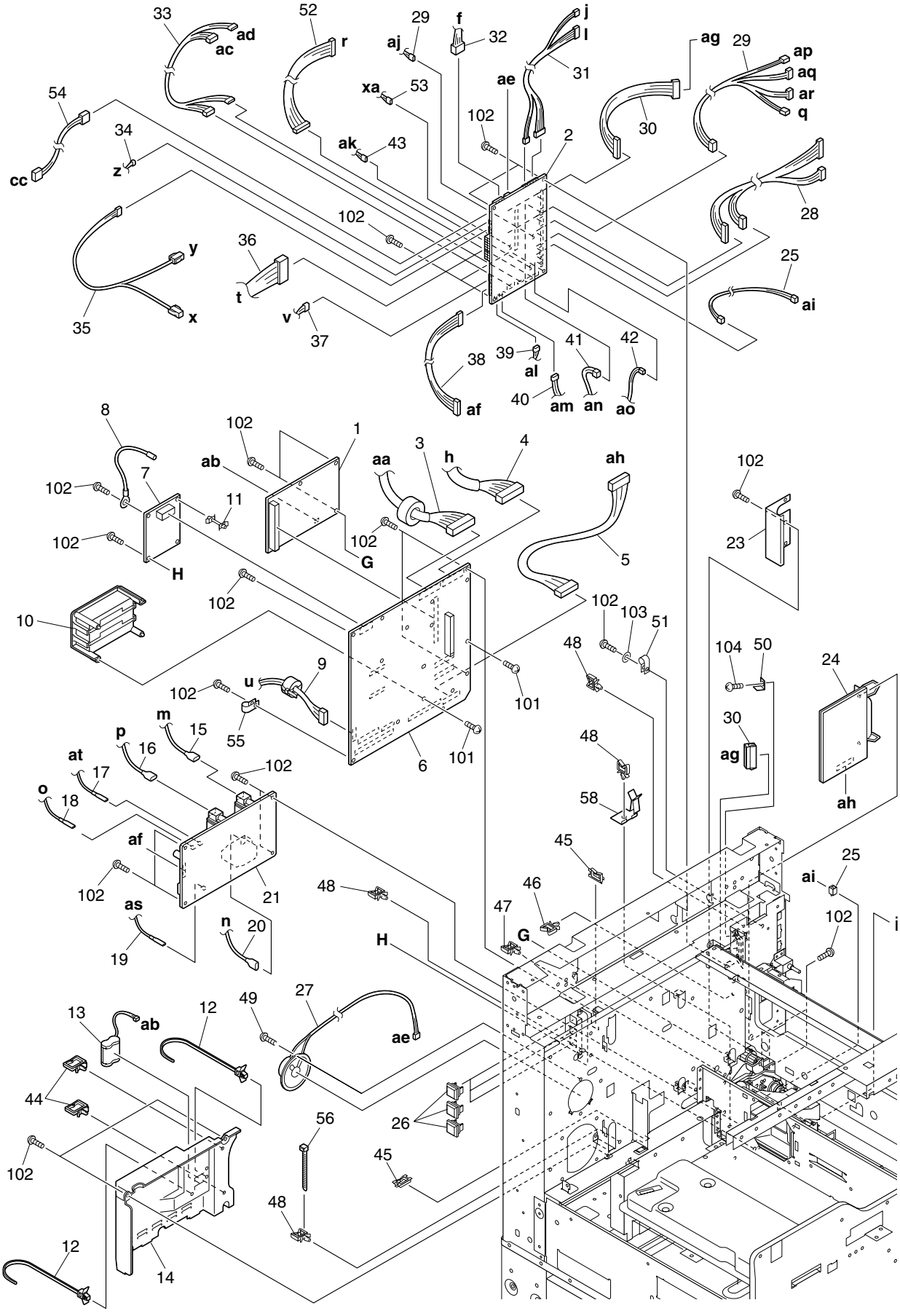
33
ad
ac
52
r
29
aj
f
32
j
l
31
ag
29
ap
aq
ar
q
54
cc
34
z
xa
53
ae
102
2
30
ak
43
28
102
y
36
t
35
x
v
37
25
ai
38
af
39
al
41
42
40
am
an
ao
8
102
1
ab
aa
3
h
4
ah
102
7
11
102
102
H
G
23
5
102
10
102
103
51
48
104
50
24
9
u
102
101
55
m
15
p
16
at
17
o
18
102
6
101
30
ag
48
ah
58
af
45
25
ai
102
21
48
46
47
102
i
as
n
20
G
H
19
27
49
13
ab
12
ae
44
26
56
102
45
48
12
14

ITEM NO.	PARTS NO.	PARTS NAME	Q'TY / PAGE	Q'TY / PACK	P	I	R	BSI NO.	TO	T	FROM	SERIAL NO.	REMARKS	C
2	41300521000	PWA-F-RLY-AT	1	1/SB					2A					
2A	41300521000	PWA-F-RLY-AT	1	1/SB	-	-	-	G01C317	2A-1		2		DP1600	
2A-1	41300521000	PWA-F-RLY-AT	1	1/SB	-	-	-	G01I704	2C		2A		DP1600	
2B	41300521100	PWA-F-RLY-AT	1	1/SB	A	-	J	G01C317	2B-1				NAD, MJD, AUD, ASD, SAD, TWD DP2000/2500	
2B-1	41300521100	PWA-F-RLY-AT	1	1/SB	-	-	-	G01I704	2D 2B-2		2B		DP2000/2500	
2B-2	41300521700	PWA-F-RLY-AT	1	1/SB	C	B	B	G01J717			2B-1		NAD, MJD, AUD, ASD, SAD, TWD DP2000/2500	
2C	41300521500	PWA-F-PLY-AT	1	1/SB	C	B	D	G01I704			2A		NAD, MJD, AUD, ASD, SAD, TWD DP1608 CND	
2D	41300521600	PWA-F-RLY-AT	1	1/SB	C	B	D	G01I704	2D-1		2B		DP2008/2508 CND	
2D-1	41300521900	PWA-F-RLY-AT	1	1/SB	C	B	B	G01J717			2D		DP2008/2508 CND	
3	41301060000	WH-OPE-AT	1	1/P										
4	41301107000	WH-SCN-MAIN-AT	1	1/P										
5	41301020000	WH-PCIF-AT	1	1/P					5A					
5A	41301020000	WH-PCIF-AT	1	1/P	-	-	-	G01J708			5		NAD, MJD, AUD, ASD, SAD, CND	
5B	41301189000	WH-PCIF-TW-AT	1	1/P	F	-	J	G01J708					DP1600 TWD	
5C	41309038000	WH-PCIF-TW-AW	1	1/P	F	-	J	G01J708					DP2500 TWD	
6	41300008000	MEM-F-NAD-AT	1	1/SB					6A					
6A	41300008000	MEM-F-NAD-AT	1	1/SB	-	-	-	G01C317	6A-1		6		DP1600	
6A-1	41300008000	MEM-F-NAD-AT	1	1/SB	-	-	-	G01J708			6A		DP1600	
6B	41308008000	MEM-F-NAD-DM20	1	1/SB	A	-	J	G01C317					NAD, MJD, AUD, ASD, SAD, CND DP2000	
6C	41308001000	MEM-F-NAD-AW	1	1/SB	A	-	J	G01C317					DP2500	
6D	41300035000	MEM-F-TWD-AT	1	1/SB	F	-	J	G01J708					NAD, MJD, AUD, ASD, SAD, CND DP1600 TWD	
6E	41308023000	MEM-F-TWD-AW	1	1/SB	F	-	J	G01J708					DP2500 TWD	
8	41301057000	WH-NCU-FG-AT	1	1/P					8-1					
8-1	41301182000	WH-NCU-FG-AT	1	1/P	E	B	J	G01B232			8			
9	41301122000	WH-LD-AT	1	1/P					9A					
9A	41301122000	WH-LD-AT	1	1/P	-	-	-	G01C317			9		DP1600	
9B	41309026000	WH-LD-CORE-AW	1	1/P	A	-	J	G01C317					DP2000/2500	
10	41306041000	GUIDE-MEMORY	1	1/P										
11	4843391423	PWB/Z-WLS-18-0	2	5/P										
12	4843390903	BD/W-SG-130	1	5/P										
13	41301044000	BAT-TH-1550AA	1	1/D										
14	41306167000	COVER-HVPS	1	1/P										
15	41301076000	WH-CCH-HV-AT	1	1/P										
16	41301074000	WH-SP-HV-AT	1	1/P										
17	41301034000	WH-DRB-HV-AT	1	1/P					17-1					
17-1	41301180000	WH-DRB-HV-AT	1	1/P	C	E	E	G01B292			17			
18	41301035000	WH-PG-HV-AT	1	1/P					18-1					
18-1	41301181000	WH-PG-HV-AT	1	1/P	C	E	E	G01B292			18			
19	41301033000	WH-DVB-HV-AT	1	1/P					19-1					
19-1	41301179000	WH-DVB-HV-AT	1	1/P	C	E	E	G01B292			19			
20	41301075000	WH-TCH-HV-AT	1	1/P										
21	41301096000	PS-HVPS-AT	1	1/C										
22	41301002000	WH-SFB-AT	1	1/P										
23	41305018000	SHIELD-PCI/F	1	1/P										
24	41300512000	PWA-F-PIF-AR1	1	1/SB										
25	41301053000	WH-BFAN-AT	1	1/P										
26	41306252000	COVER-MODULAR	3	1/PP										
27	41301001000	SPEAKER-AT	1	1/C										
28	41301061000	WH-PFC-AT	1	1/P										
29	41301006000	WH-CASSETTE-AT	1	1/P										
30	41301016000	WH-JSP-AT	1	1/P										
31	41301080000	WH-FDS2-STH-AT	1	1/P										
32	41301108000	WH-SCN-PWR-AT	1	1/P										
33	41301084000	WH-MDM-AT	1	1/P					33A					
33A	41301084000	WH-MDM-AT	1	1/P	-	-	-	G01C317			33		DP1600	
33B	41309001000	WH-MDM-AW	1	1/P	A	-	J	G01C317					DP2000/2500	
34	41301082000	WH-FCOS-AT	1	1/P										
35	41301083000	WH-FAN-AT	1	1/P										
36	41301085000	WH-LVPS-AT	1	1/P					36A					
36A	41301085000	WH-LVPS-AT	1	1/P	-	-	-	G01C317			36		DP1600	
36B	41309004000	WH-LVPS-AW	1	1/P	A	-	J	G01C317					DP2000/2500	
37	41301081000	WH-PM-AT	1	1/P										
38	41301012000	WH-HVPS-AT	1	1/P					38-1					
38-1	41301178000	WH-HVPS-AT	1	1/P	E	B	J	G01B232			38			

ITEM NO.	PARTS NO.	PARTS NAME	Q'TY / PAGE	Q'TY / PACK	P	I	R	BSI NO.	TO	T	FROM	SERIAL NO.	REMARKS	C
39	41301058000	WH-DEL-AT	1	1/P										
40	41301077000	WH-TES-AT	1	1/P										
41	41306613000	M/DC-TNR-AT5	1	1/C					41A					
41A	41306613000	M/DC-TNR-AT5	1	1/C	-	-	-	G01C317			41		DP1600	
41B	41309035000	M/DC-TNR-AW	1	1/C	A	-	J	G01C317					DP2000/2500	
42	41301067000	WH-TCSW-AT	1	1/P										
43	41301094000	WH-FDS1-AT	1	1/P										
44	4843391729	CLP/W-CH-30	2	5/P										
45	4843390941	BD/W-EDS-1	2	10/P										
46	4843390854	CLP/W-LWS-1U	1	5/P										
47	4843390855	CLP/W-LWS-2U	1	5/P										
48	4843391725	CLP/W-WS-1NS	4	5/P										
49	41306916000	SCREW-SPEAKER	1	10/P										
50	4843391764	FT-42117-2	1	1/D										
51	4402953760	CLP/W-EMT-6N	1	5/P										
52	4843390314	PWZ-KGPS-8S	1	10/P										
53B	41301188000	WH-AC-RESET-AT	1	1/P	A	-	J	G01I704					CND	
54B	41309010000	WH-FIN-RELAY	1	1/P	A	-	J	G01C317					DP2000/2500	
55B	4843391399	CLP/W-FGC-5	1	1/P	A	-	J	G01C317					DP2000/2500	
58E	41313506000	SPRING-MAIN-TWA	1	5/P	A	-	J	G01J708					DP2500 TWD	
101	4842040846	PTBR30*08MSZN3A	2	50/P										
102	4842040685	TBID3008MSZN3A	21	50/P					102-1					
102-1	4842040685	TBID3008MSZN3A	20	50/P	D	-	J	G01B232			102			
103	4842080261	1HWAS030MSZN3A	1	50/P										
104	4842040370	TBID3006MSZN3L	1	50/P	F	-	J	G01B232						

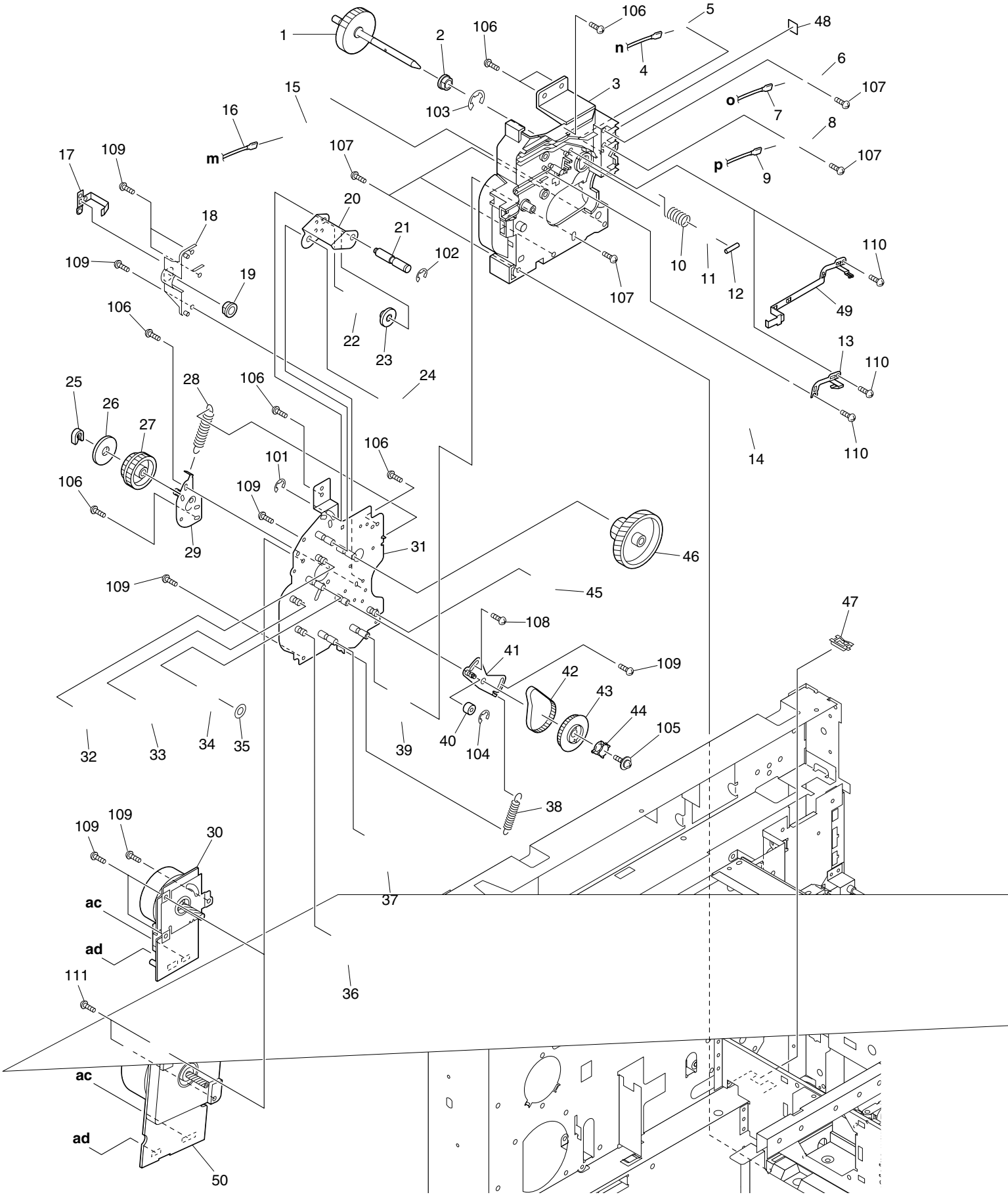
1
2
106
106
5
48
n
4
6
3
15
103
107
o
7
8
16
m
107
107
p
9
17
109
20
18
21
102
110
109
19
10
11
12
107
49
106
22
23
13
110
25
28
106
24
26
27
106
101
110
14
106
109
29
31
46
109
45
47
108
41
109
42
43
44
105
32
33
34
35
39
40
104
38
109
109
30
37
ac
ad
111
36
ac
ad
50

ITEM NO.	PARTS NO.	PARTS NAME	Q'TY / PAGE	Q'TY / PACK	P	I	R	BSI NO.	TO	T	FROM	SERIAL NO.	REMARKS	C
1	41304016000	K-SHAFT-DRUM-AT	1	1/P										
2	4402461720	BUSH-8*5.5-GCB	1	5/P										
3-1	41306347000	FRAME-GEAR	1	1/P					3A					
3A	41306347000	FRAME-GEAR	1	1/P	-	-	-	G01C317	3A-1		3-1		DP1600	
3A-1	41306367000	FRAME-GEAR	1	1/P	C	B	F	G01C322			3A		DP1600	
3B	41306367100	FRAME-GEAR	1	1/P	A	-	J	G01C317					DP2000/2500	
4	41301075000	WH-TCH-HV-AT	1	1/P										
5-1	41305575000	SPL-TREW-AT5	1	1/P					5-2					
5-2	41305588000	SPL-TREW-AT5-N	1	5/P	C	B	D	G01K773			5-1			
6	41305527000	SPL-PAG-AT5	1	1/P					6-1					
6-1	41305590000	SPL-PAG-AT5-N	1	5/P	C	B	D	G01K773			6			
7	41301035000	WH-PG-HV-AT	1	1/P					7-1					
7-1	41301181000	WH-PG-HV-AT	1	1/P	C	E	E	G01B292			7			
8	41305529000	SPL-DCW-AT5	1	1/P					8-1					
8-1	41305589000	SPL-DCW-AT5-N	1	5/P	C	B	D	G01K773			8			
9	41301074000	WH-SP-HV-AT	1	1/P										
10	41305521000	SPC-CPG-DRUM	1	5/P										
11	41306088000	CPG-DRUM-AT5	1	1/P					11A					
11A	41306088000	CPG-DRUM-AT5	1	1/P	-	-	-	G01C317			11		DP1600	
11B	41314022000	CPG-DRUM-AW5	1	1/P	A	-	J	G01C317					DP2000/2500	
12	4842904035	HPIN20/10SUSH7	1	50/P										
13	41304092000	K-SPL-GRID	1	1/P					13A					
13A	41304092000	K-SPL-GRID	1	1/P	-	-	-	G01C317	13A-1		13		DP1600	
13A-1	41305577000	K-SPL-GRID	1	1/P	C	B	D	G01C304	13A-2		13A		DP1600	
13A-2	41305587000	SPL-GRID-AT5-N	1	5/P	C	B	D	G01K773			13A-1		DP1600	
14	41305525000	SPL-GRID2-AT5	1	1/P					14A					
14A	41305525000	SPL-GRID2-AT5	1	1/P	-	-	-	G01C317			14		DP1600	
15	41305523000	SPL-CW-AT5	1	1/P					15-1					
15-1	41305586000	SPL-CW-AT5-N	1	5/P	C	B	D	G01K773			15			
16	41301076000	WH-CCH-HV-AT	1	1/P										
17	41305528000	SPL-SFT/D-AT5	1	1/P										
18	41306090000	HOLDER-BRG-12	1	1/P										
19	4346312030	BUSHING	1	5/P										
20	41305108000	PLT-HR-DRV	1	1/P					20A					
20A	41305108000	PLT-HR-DRV	1	1/P	-	-	-	G01C317			20		DP1600	
20B	41313019000	PLT-HR-DRV-AW	1	1/P	A	-	J	G01C317					DP2000/2500	
21	41304560000	STUD-DHR	1	1/P					21-1					
22	41306085000	GER-34M0819M10	1	1/P					22A					
22A	41306085000	GER-34M0819M10	1	1/P	-	-	-	G01C317			22		DP1600	
22B	41314010000	GER-34M0819M1AW	1	1/P	A	-	J	G01C317					DP2000/2500	
23	41306329000	BUSH-HRD	1	5/P					23A					
23A	41306329000	BUSH-HRD	1	5/P	-	-	-	G01C317			23		DP1600	
23B	41314009000	BUSH HRD-AW	1	5/P	A	-	J	G01C317					DP2000/2500	
24	41306082000	GER-42M0620M08	1	1/P										
25	4407972860	STOP-RING-6-5	1	5/P										
26	41306259000	FLG-GP-3GT025	1	1/P										
27	41306092000	GP-1S030/3GT025	1	1/P										
28	41305517000	SPE-PR30-200	1	1/P										
29	41304017000	K-PLT-PLY/G	1	1/P					29A					
29A	41304017000	K-PLT-PLY/G	1	1/P	-	-	-	G01C317	29A-1		29		DP1600	
29A-1	41304097000	K-PLT-PLY/G	1	1/P	C	B	F	G01C306			29A		DP1600	
29B	41304097000	K-PLT-PLY/G	1	1/P	A	-	J	G01C317					DP2000/2500	
30	41304061000	K-M/DC-MAIN-AT	1	1/C					30A					
30A	41304061000	K-M/DC-MAIN-AT	1	1/C	-	-	-	G01C317	30A-1		30		DP1600	
30A-1	41304061100	K-M/DC-MAIN-AT	1	1/C	C	B	E	G01H633			30A		DP1600	
31	41304015000	K-PLT-GEAR-AT	1	1/P					31A					
31A	41304015000	K-PLT-GEAR-AT	1	1/P	-	-	-	G01C317			31		DP1600	
31B	41312021100	K-PLT-GEAR-AW	1	1/P	A	-	J	G01C317					DP2000/2500	
32	41306078000	GER-50M0.6-AT5	1	1/P					32A					
32A	41306078000	GER-50M0.6-AT5	1	1/P	-	-	-	G01C317			32		DP1600	
32B	41314008000	GEAR-49M06-AW	1	1/P	A	-	J	G01C317					DP2000/2500	
33	41306081000	GER-56M0.6	1	1/P										
34	41306076000	GER-63M0527M06	1	1/P										
35	4842080107	WAS-6*11.5*1.6	5	10/P					35-1					
35-1	4842080107	WAS-6*11.5*1.6	1	10/P	D	-	J	G01B232			35			
36	41306077000	GER-77M0.6	1	1/P										
37	41306084000	GER-48M0642M10	1	1/P					37A					
37A	41306084000	GER-48M0642M10	1	1/P	-	-	-	G01C317			37		DP1600	
37B	41314005000	GER-45M629M1-AW	1	1/P	A	-	J	G01C317					DP2000/2500	
38	41305567000	SPE-RLR-TSN	1	1/P										

ITEM NO.	PARTS NO.	PARTS NAME	Q'TY / PAGE	Q'TY / PACK	P	I	R	BSI NO.	TO	T	FROM	SERIAL NO.	REMARKS	C
39	41306086000	GER-16M1048M10	1	1/P										
39A	41306086000	GER-16M1048M10	1	1/P	-	-	-	G01C317			39		DP1600	
39B	41314003000	GER-19M142M1-AW	1	1/P	A	-	J	G01C317					DP2000/2500	
40	41306335000	RLR-DRV-TSN	1	1/P					40A					
40A	41306335000	RLR-DRV-TSN	1	1/P	-	-	-	G01C317			40		DP1600	
40B	41314014000	RLR-DRV-TSN-AW	1	1/KP	A	-	J	G01C317					DP2000/2500	
41	41304058000	K-PL-RLR-TSN	1	1/P					41A					
41A	41304058000	K-PL-RLR-TSN	1	1/P	-	-	-	G01C317			41		DP1600	
41B	41304058100	K-PL-RLR-TSN	1	1/P	A	-	J	G01C317					DP2000/2500	
42	41306871000	BELT-COUPLER-PU	1	1/P										
43	41306332000	PLY/T-60S2M	1	1/P					43A					
43A	41306332000	PLY/T-60S2M	1	1/P	-	-	-	G01C317			43		DP1600	
43B	41314006000	PULLEY-56S2M	1	1/P	A	-	J	G01C317					DP2000/2500	
44	41306331000	CPG-PU	1	1/P										
45	41306079000	GER-35M1.0	1	1/P										
46	41306075000	GER-98M0525M06	1	1/P										
47	4843390941	BD/W-EDS-1	1	10/P										
48	41306954000	LBL/W-HV	1	5/P										
49B	41313502000	SPL-GRID	1	1/P	A	-	J	G01C317	49B-1				DP2000/2500	
49B-1	41313507000	SPL-GRID-AW5-N	1	5/P	C	B	D	G01K773			49B		DP2000/2500	
50B	41312002000	K-M/DC-MAIN-AW	1	1/C	A	-	J	G01C317					DP2000/2500	
101	4842090309	ERR025SKZN3A	1	50/P										
102	4842090311	ERR040SKZN3A	1	50/P										
103	4842090315	ERR080SKZN3A	1	50/P										
104	4842090310	ERR030SKZN3A	1	50/P										
105	4842080197	ZPAN30*06MSZN3A	1	50/P										
106	4842040685	TBID3008MSZN3A	6	50/P										
107	4842040846	PTBR30*08MSZN3A	6	50/P										
108	7040300311	PAN30*03MSZN3AI	1	50/P										
109	4842040370	TBID3006MSZN3L	9	50/P					109A					
109A	4842040370	TBID3006MSZN3L	9	50/P	-	-	-	G01C317			109		DP1600	
109B	4842040370	TBID3006MSZN3L	6	50/P	A	-	J	G01C317					DP2000/2500	
110	4842042076	TBIDP3006MSZN3A	2	50/P	A	-	D	G01B270						
111B	4842042094	TBIDS4014MSZN3A	2	10/P	A	-	J	G01C317					DP2000/2500	

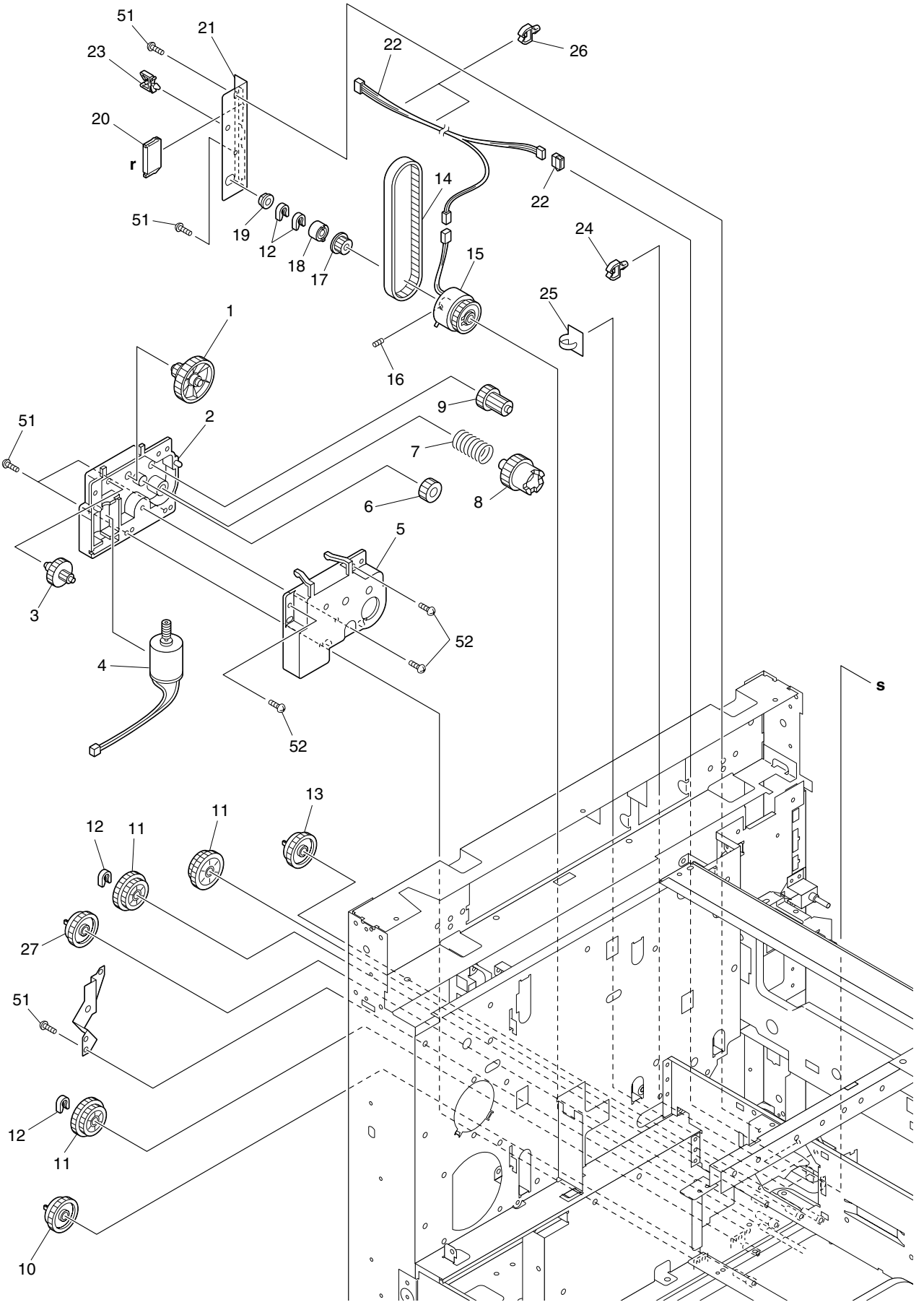
51
21
23
22
26
20
r
14
22
51
19
12
18
17
24
15
25
1
16
9
51
2
7
6
8
5
3
52
4
s
52
13
11
12
11
27
51
12
11
10

ITEM NO.	PARTS NO.	PARTS NAME	Q'TY / PAGE	Q'TY / PACK	P	I	R	BSI NO.	TO	T	FROM	SERIAL NO.	REMARKS	C
1	41306023000	GER-TRAY-80-13	1	1/P										
2	41306026000	CASE-TRY-DEV-R	1	1/P										
3	4401966040	G05H-45/G05S-15	1	1/P										
4	41306513000	M/DC-TRAY-CST	1	1/C										
5	41306027000	CASE-TRY-DEV-F	1	1/P										
6	41306025000	GER-TRAY-21	1	1/P										
7	41305502000	SPC-CPG-LIFT	1	1/P										
8	41306022000	CPG-LIFT-28	1	1/P										
9	41306024000	GER-TRAY-24-14	1	1/P										
10	41306255000	GER-IDL-MID-29W	1	1/P										
11	41306010000	GER-MID-24-30	3	1/P										
12	4407972860	STOP-RING-6-5	5	5/P										
13	41306001000	GER-IDL-MID-29	2	1/P					13-1					
13-1	41306001000	GER-IDL-MID-29	1	1/P	D	-	D	G01J709			13			
14	41306511000	BLT/T-309-3GT-4	1	1/P										
15	41306506000	CLUTCH-8K-CCW-6	1	1/C										
16	4842011062	9HSS30/04MSFB	1	50/P										
17	41306020000	PLY/T-MID-16-3G	1	1/P										
18	4408636730	CLUTCH-6-08R	1	1/D										
19	4407734980	BUSH-6-GCB	1	5/P										
20	41301002000	WH-SFB-AT	1	1/P										
21	41305011000	PL-CONT-SFB	1	1/P										
22	41301065000	WH-2PFC-AT	1	1/P										
23	4843391725	CLP/W-WS-1NS	1	5/P										
24	4843391006	CLP/W-UAMS-02-0	1	5/P										
25	4843391726	CLP/W-K-103G	1	5/P										
26	4843391177	CLP/W-UAMS05S	2	5/P										
27	41306386000	GER-IDLE-MID-29	1	1/P	A	-	D	G01J709						
51	4842040685	TBID3008MSZN3A	5	50/P										
52	4842040846	PTBR30*08MSZN3A	3	50/P										

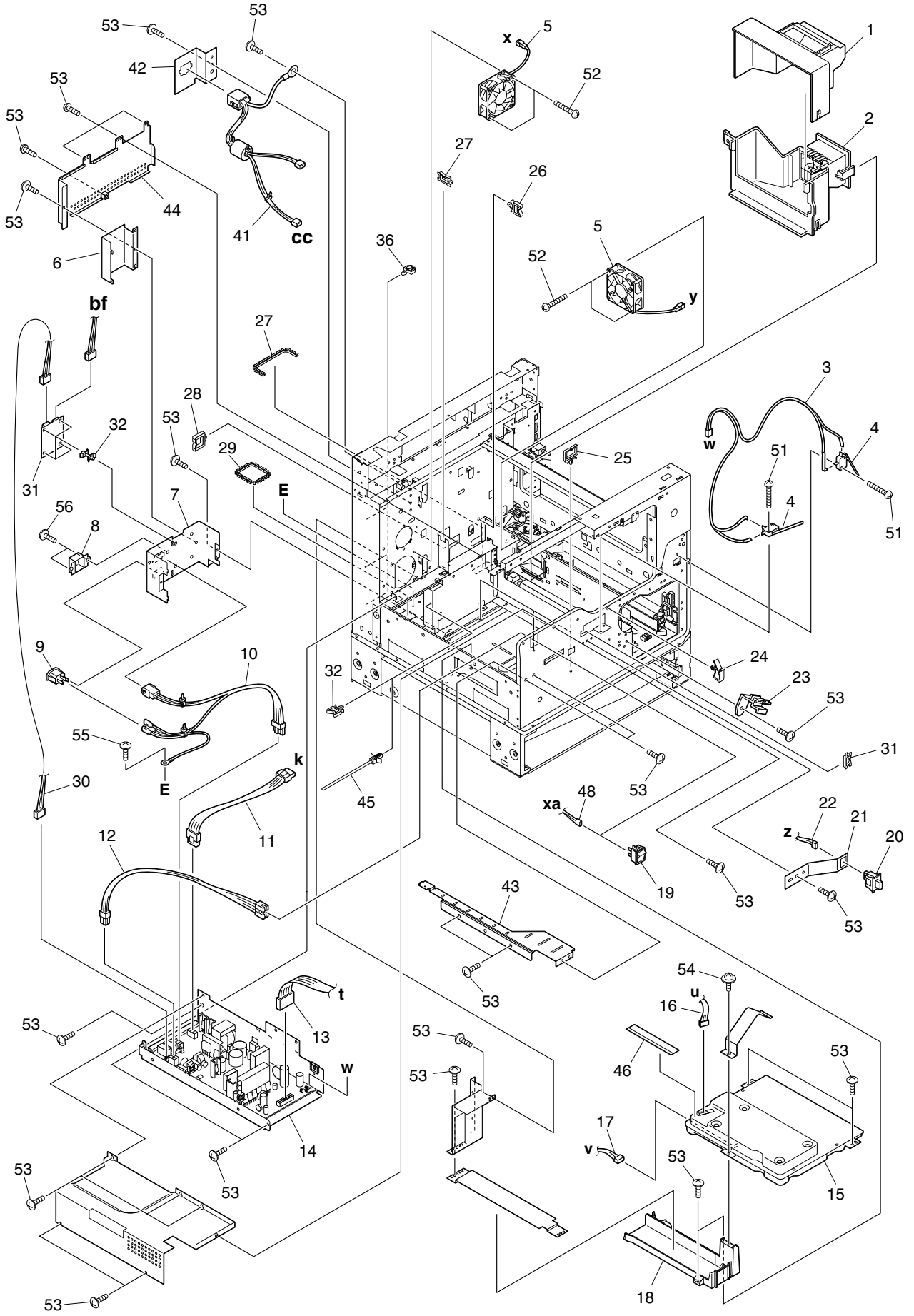
53
42
5
x
52
1
2
27
26
44
41
cc
36
6
bf
y
3
28
32
29
E
25
w
51
4
31
7
56
8
9
10
24
23
55
k
30
45
48
xa
22
z
21
20
12
11
19
43
54
u
16
t
13
w
14
46
17
v
15
18

ITEM NO.	PARTS NO.	PARTS NAME	Q'TY / PAGE	Q'TY / PACK	P	I	R	BSI NO.	TO	T	FROM	SERIAL NO.	REMARKS	C
1	41306307000	DUCT-UPPER-SIDE	1	1/P										
2	41306308000	DUCT-LOWER-SIDE	1	1/P										
3	41301068000	WH-24VCOS-AT	1	1/P										
4	41301079000	SM-V-21522-3C6	2	1/C					4-1					
4-1	41301175000	SM-V-21522-3C6	2	1/C	E	B	J	G01B232			4			
5	41306518000	FAN-EXHAUST	2	1/D										
6	41305020000	SHIELD-AC	1	1/P										
7	41305024000	HOLDER-INLET	1	1/P										
8	41305083000	LID-CONNECTOR	1	1/P										
9	4843309865	JP-NC-179-F6.35	1	5/P										
10	41301093000	WH-AC-IO-AT	1	1/P										
11A	41301036000	WH-HTLP-USAT	1	1/P									120V	
11B	41301024000	WH-HTLP-AT	1	1/P									220V	
12	41301078000	WH-MAINSW-AT	1	1/P					12A 12B					
12A	41301078000	WH-MAINSW-AT	1	1/P	-	-	-	G01I704			12		NAD, MJD, AUD, ASD, SAD, TWD	
12B	41301187000	WH-MAINSW-R-AT	1	1/P	C	B	D	G01I704			12		CND	
13	41301085000	WH-LVPS-AT	1	1/P					13A					
13A	41301085000	WH-LVPS-AT	1	1/P	-	-	-	G01C317			13		DP1600	
13B	41309004000	WH-LVPS-AW	1	1/P	A	-	J	G01C317					DP2000/2500	
14A	41301130000	PS-LVPS-ATUS	1	1/C					14A-1				120V	
14A-1	41301130000	PS-LVPS-ATUS	1	1/C	-	-	-	G01C317	14A-2		14A		DP1600(120V)	
14A-2	41301130000	PS-LVPS-ATUS	1	1/C	-	-	-	G01J708			14A-1		DP1600 (NAD, SAD)	
14B	41301130100	PS-LVPS-ATEU	1	1/C					14B-1				220V	
14B-1	41301130100	PS-LVPS-ATEU	1	1/C	-	-	-	G01C317			14B		DP1600(220V)	
14C	41309022000	PS-LVPS-AW	1	1/C	A	-	J	G01C317	14C-1				DP2000/2500(120V)	
14C-1	41309022000	PS-LVPS-AW	1	1/C	-	-	-	G01J708			14C		DP2000/2500(NAD, SAD)	
14D	41309022100	PS-LVPS-AW	1	1/C	A	-	J	G01C317					DP2000/2500(220V)	
14E	41301130200	PS-LVPS-ATTW	1	1/C	F	-	J	G01J708					DP1600 TWD	
14F	41309022200	PS-LVPS-AW(TW)	1	1/C	F	-	J	G01J708					DP2500 TWD	
15	41303621000	ASM-PG-LSU-S	1	1/S					15A					
15A	41303621000	ASM-PG-LSU-S	1	1/S	-	-	-	G01C317			15		DP1600	
15B	41303621100	ASM-PG-LSU-S	1	1/S	A	-	J	G01C317					DP2000/2500	
16	41301122000	WH-LD-AT	1	1/P					16A					
16A	41301122000	WH-LD-AT	1	1/P	-	-	-	G01C317			16		DP1600	
16B	41309026000	WH-LD-CORE-AW	1	1/P	A	-	J	G01C317					DP2000/2500	
17	41301081000	WH-PM-AT	1	1/P										
18	41306038000	HOLDER-AU1	1	1/P										
19	4843232258	SW-AJ8W200WW	1	1/D					19A 19B					
19A	4843232258	SW-AJ8W200WW	1	1/D	-	-	-	G01I704			19		NAD, MJD, AUD, ASD, SAD, TWD	
19B	44205162000	SZ-AJ8R2004ZC	1	1/D	C	B	D	G01I704			19		CND	
20	4843232255	SP-CS1A-B2CA	1	1/D										
21	41305076000	PLT-CO-SW	1	1/P										
22	41301082000	WH-FCOS-AT	1	1/P										
23	41306284000	LOCK-CART-TNR	1	1/P										
24	4842413233	CLP-YMC-05-O	1	5/P										
25	4843391729	CLP/W-CH-30	1	5/P										
26	4843391725	CLP/W-WS-1NS	2	5/P										
27	4843390941	BD/W-EDS-1	1	10/P										
28	4843391164	BD/W-EDS-1717U	1	10/P										
29	4843391727	WIRE/B-KG-010	2	5/P										
30	41301028000	WH-PS-ACRLY-AT	1	1/P									AUD, ASD, SAD, TWD/CND	
31	41300515100	PWA-F-FUS-AT	1	1/SB					31A				AUD, ASD, SAD, TWD/CND	
31A	41300515100	PWA-F-FUS-AT	1	1/SB	-	-	-	G01J708			31		AUD, ASD, CND	
31B	41300515200	PWA-F-FUS-AT	1	1/SB	F	-	J	G01J708					SAD, TWD	
32	4843391431	PWB/Z-WLS-10-O	4	5/P									ASD/AUD/TWD/SAD	
36	4843391177	CLP/W-UAMS05S	3	5/P	F	-	J	G01B232					AUD, ASD, SAD, TWD/CND	
41B	41309025000	WH-FIN-IPC-CORE	1	1/P	A	-	J	G01C317					DP2000/2500	
42B	41321477000	STAY-FINISHER	1	1/P	A	-	J	G01C317					DP2000/2500	
43C	41305139000	STAY-LVPS-EMI	1	1/P	A	-	J	G01J708					DP1600/2500 TWD	
44C	41305138000	PL-SHIELD-PFC	1	1/P	A	-	J	G01J708					DP1600/2500 TWD	
45F	4843390841	BD/W-SKB-145P	1	5/P	A	-	J	G01J708					DP2500 TWD	
46F	41314597000	SHEET-1245-TWA	1	1/KP	A	-	J	G01J708					DP2500 TWD	
48B	41301188000	WH-AC-RESET-AT	1	1/P	A	-	J	G01I704					CND	
51	4842042071	TBIDS3016MSZN3A	2	50/P										
52	4842042072	TBIDS3030MSZN3A	4	50/P										
53	4842040685	TBID3008MSZN3A	20	50/P					53A					
53A	4842040685	TBID3008MSZN3A	20	50/P	-	-	-	G01C317			53		DP1600	
53B	4842040685	TBID3008MSZN3A	22	50/P	A	-	J	G01C317	53B-1				DP2000/2500	

ITEM NO.	PARTS NO.	PARTS NAME	Q'TY / PAGE	Q'TY / PACK	P	I	R	BSI NO.	TO	T	FROM	SERIAL NO.	REMARKS	C
53B-1	4842040685	TBID3008MSZN3A	22	50/P	-	-	-	G01J708					DP2000/2500	
													NAD, MJD, AUD, ASD, SAD, CND	
53F	4842040685	TBID3008MSZN3A	30	50/P	D	-	J	G01J708					DP2500 TWD	
54	4842040846	PTBR30*08MSZN3A	1	50/P										
55	7043400813	BID40*08MSCR1AI	1	50/P										
56	4842042065	TBIDS3008MSCR1A	2	50/P										

ASM-DEV. MOTOR

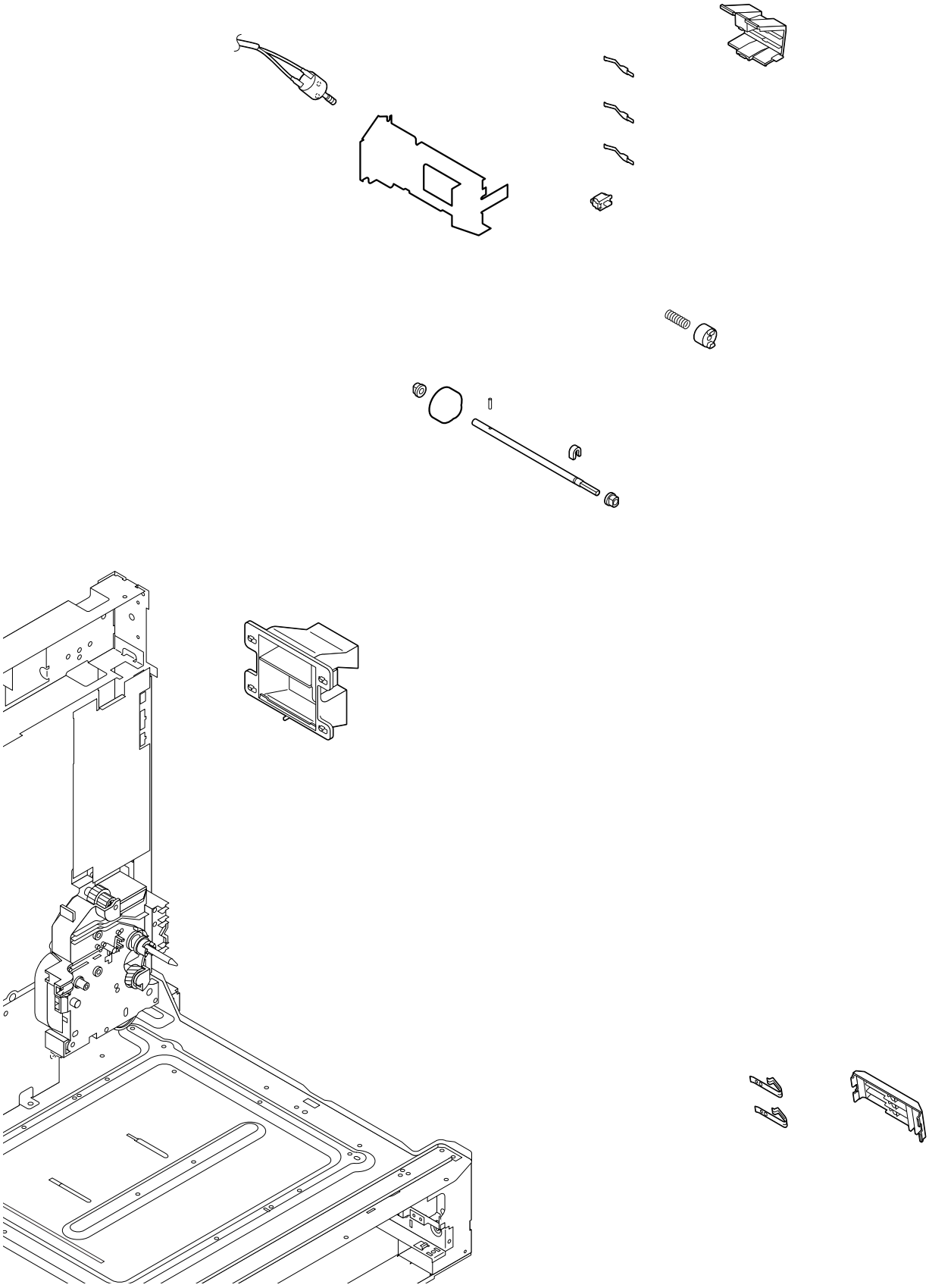

ITEM NO.	PARTS NO.	PARTS NAME	Q'TY / PAGE	Q'TY / PACK	P	I	R	BSI NO.	TO	T	FROM	SERIAL NO.	REMARKS	C
1	41306037000	DUCT-FRONT-SIDE	1	1/P										
2	41306613000	M/DC-TNR-AT5	1	1/C					2A					
2A	41306613000	M/DC-TNR-AT5	1	1/C	-	-	-	G01C317			2		DP1600	
2B	41309035000	M/DC-TNR-AW	1	1/C	A	-	J	G01C317					DP2000/2500	
3-1	41305126000	PL-M/DC-TS-ATAW	1	1/P					3A					
3A	41305126000	PL-M/DC-TS-ATAW	1	1/P	-	-	-	G01C317	3A-1		3-1		DP1600	
3A-1	41313022000	PL-M/DC-TS-ATAW	1	1/P	C	B	F	G01C305			3A		DP1600	
3B	41313022000	PL-M/DC-TS-ATAW	1	1/P	A	-	J	G01C317					DP2000/2500	
4	41306073000	HOLDER-SPL-DCL	1	1/P										
5	41305520000	SPL-DCL-AT5	3	1/P										
6	41301067000	WH-TCSW-AT	1	1/P										
7	4843232255	SP-CS1A-B2CA	1	1/D										
8	41301058000	WH-DEL-AT	1	1/P										
9	41305519000	SPC-CPG-TC	2	5/P										
10	41306070000	CPG-TC-AT5	1	5/P										
11	41306326000	GUIDE-CART	1	1/P										
12	44201492000	BUSH-6-POM	2	5/P										
13	41306072000	WHEEL-WORM-AT5	1	1/P					13A					
13A	41306072000	WHEEL-WORM-AT5	1	1/P	-	-	-	G01C317			13		DP1600	
13B	41314012000	WHEEL-WORM-AW	1	1/P	A	-	J	G01C317					DP2000/2500	
14	4842904035	HPIN20/10SUSH7	1	50/P										
15	41304525000	SHAFT-TSM-AT5	1	1/P										
16	4407972860	STOP-RING-6-5	1	5/P										
17	41306049000	COVER-TERM-TES	1	1/P										
18	41305509000	SPL-TES-AT5	2	1/P										
19	41301077000	WH-TES-AT	1	1/P										
20	4843391730	WIRE/B-T18R	2	5/P										
21B	41314547000	FILM-DUCT	1	1/C	A	-	J	G01C317					DP2000/2500	
22B	41313021000	PLATE-FUSER	1	1/P	A	-	J	G01C317					DP2000/2500	
23B	41314548000	SHIELD-DUCT	1	1/KP	A	-	J	G01C317					DP2000/2500	
24B	41313013000	CASE-DC	1	1/P	A	-	J	G01C317					DP2000/2500	
51	4842041344	ZPAN26X05MSZN3A	2	50/P					51-1					
51-1	41307879100	ZPANS26*05ZN3A	2	10/P	C	B	D	G01I677			51			
52	4842040685	TBID3008MSZN3A	1	50/P										
53	4842040846	PTBR30*08MSZN3A	2	50/P										
54	4842090309	ERR025SKZN3A	1	50/P										
55B	4842040370	TBID3006MSZN3L	4	50/P	A	-	J	G01C317					DP2000/2500	
56	4842040495	PTBR30*06MSZN3A	2	50/P	F	-	J	G01I677						

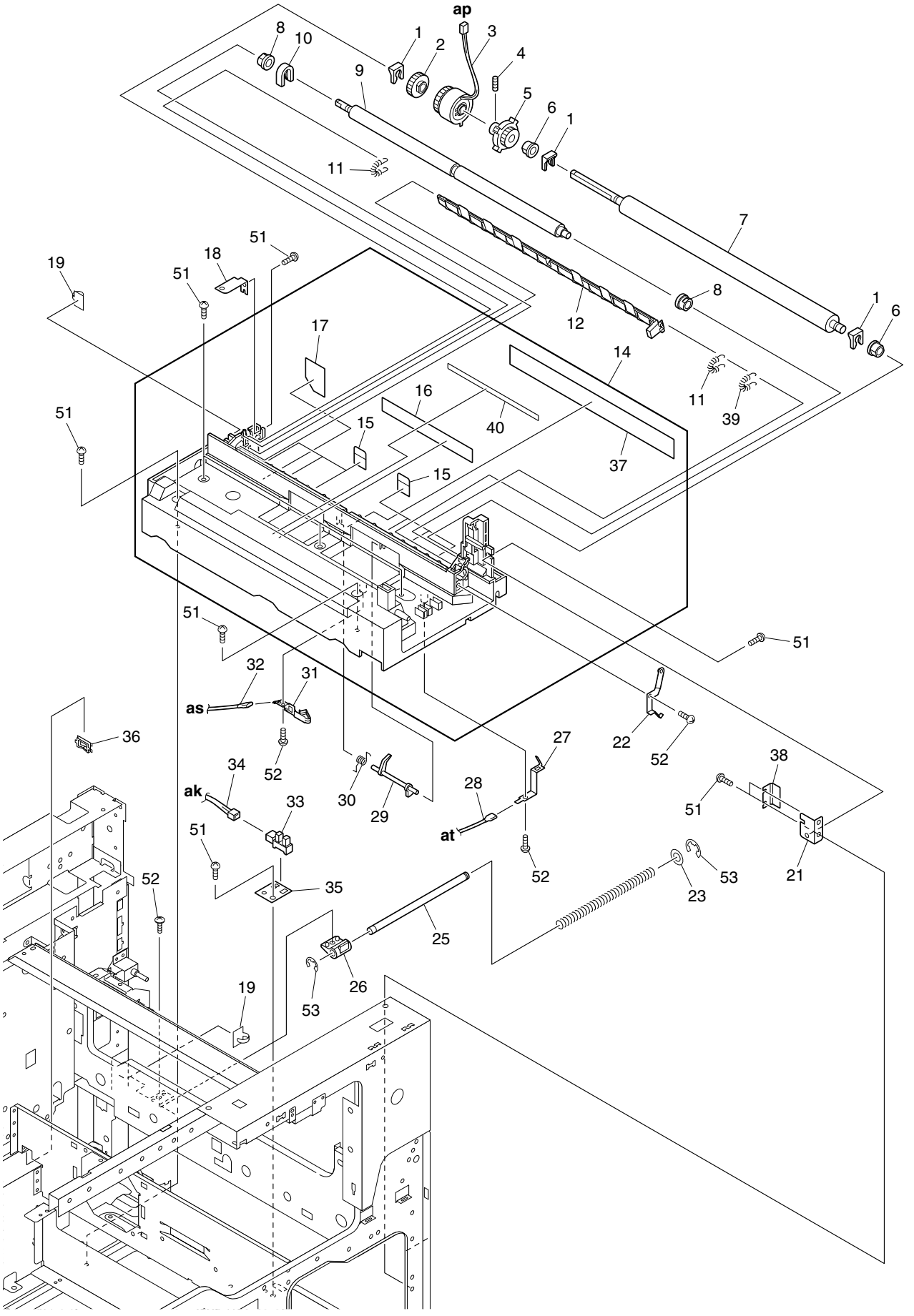
ap
8
10
1
2
3
4
9
5
6
1
11
7
51
18
19
51
8
1
6
12
17
14
11
39
16
51
15
40
37
15
51
51
32
31
as
36
27
22
52
52
34
38
ak
33
30
28
29
51
51
at
52
53
21
52
35
23
25
26
19
53

ITEM NO.	PARTS NO.	PARTS NAME	Q'TY / PAGE	Q'TY / PACK	P	I	R	BSI NO.	TO	T	FROM	SERIAL NO.	REMARKS	C
1	4400336190	STOP-RING-8	3	5/P										
2	41306044000	GEAR-24M1.0	1	1/P										
3	41306527000	CLUTCH-8K-CCW-8	1	1/C										
4	4842011062	9HSS30/04MSFB	1	50/P										
5	41306046000	GEAR-F/R	1	1/P										
6	4346312030	BUSHING	2	5/P										
7	41306526000	ROLLER-REGIST	1	1/KP										
8	41306623000	BUSH-D6*7-GCB	2	5/P										
9	41304514000	SHAFT-PINCH	1	1/KP										
10	4407972860	STOP-RING-6-5	1	5/P										
11	41305571000	SPE-P/R-CLN-550	1	5/P					11A					
11A	41305571000	SPE-P/R-CLN-550	2	5/P	E	E	J	G01C317			11		DP1600	
11B	41305571000	SPE-P/R-CLN-550	1	5/P	A	-	J	G01C317					DP2000/2500	
12	41304040000	K-FLAP-A	1	1/P										
14A	41304066300	K-GUIDE P/U	1	1/P									NAD	
14B	41304066400	K-GUIDE-P/U	1	1/P									MJD/CND	
14C	41304066200	K-GUIDE-P/U	1	1/P									ASD, AUD, SAD	
14D	41304066500	K-GUIDE-P/U	1	1/PP	A	-	J	G01J708					TWD	
15	41306628000	SHEET-P/U-GUIDE	6	5/P										
16	41306969000	SHEET-P/U-G-R	1	1/P					16-1					
17	41306720000	LBL/W-LASER	1	1/KP					17-1					
18	41304077000	K-LBL-PLT-PFR/B	1	1/P					18A					
18A	41304077000	K-LBL-PLT-PFR/B	1	1/P	-	-	-	G01C317	18A-1		18		DP1600	
18A-1	41304114000	K-LBL-PLT-TSB	1	1/P	C	B	F	G01C308			18A		DP1600	
18B	41304114000	K-LBL-PLT-TSB	1	1/P	A	-	J	G01C317					DP2000/2500	
19	4843391726	CLP/W-K-103G	2	5/P										
21	41305074000	PL-P/U-SUPPORT	1	1/P										
22	41305507000	SPL-PFR-AT5	1	1/P										
23	41306941000	WASHER-SHTR	1	10/P										
24	41305550000	SPC-PUSH-SHTR	1	1/P										
25	41304546000	SFT-PUSH-SHTR	1	1/P										
26	41306294000	BUSH-PUSH-SHTR	1	1/P										
27	41305508000	SPL-PFPR-AT5	1	1/P										
28	41301034000	WH-DRB-HV-AT	1	1/P					28-1					
28-1	41301180000	WH-DRB-HV-AT	1	1/P	C	E	E	G01B292			28			
29	41306045000	LEVER-SENSOR	1	1/P										
30	41305505000	SPR-SENSOR-LVR	1	1/P										
31	41305506000	SPL-DEV-AT5	1	1/P										
32	41301033000	WH-DVB-HV-AT	1	1/P					32-1					
32-1	41301179000	WH-DVB-HV-AT	1	1/P	C	E	E	G01B292			32			
33	4408683480	SZ-GP1A73A	1	1/C										
34	41301094000	WH-FDS1-AT	1	1/P										
35	41305067000	PL-FDS1	1	1/P										
36	4843390941	BD/W-EDS-1	1	10/P										
37	41307588000	SHEET-PUG-LIB1	1	1/KP										
38	41305576000	SPL-F-CH-EARTH	1	1/P										
39B	41313501000	SPE-P/R-CLN-AW	1	5/P	A	-	J	G01C317					DP2000/2500	
40D	41307834000	LBL/W-LASER-TWD	1	5/P	A	-	J	G01J708					TWD	
51	4842040685	TBID3008MSZN3A	8	50/P										
52	4842040846	PTBR30*08MSZN3A	4	50/P										
53	4842090308	ERR020SKZN3A	2	50/P										

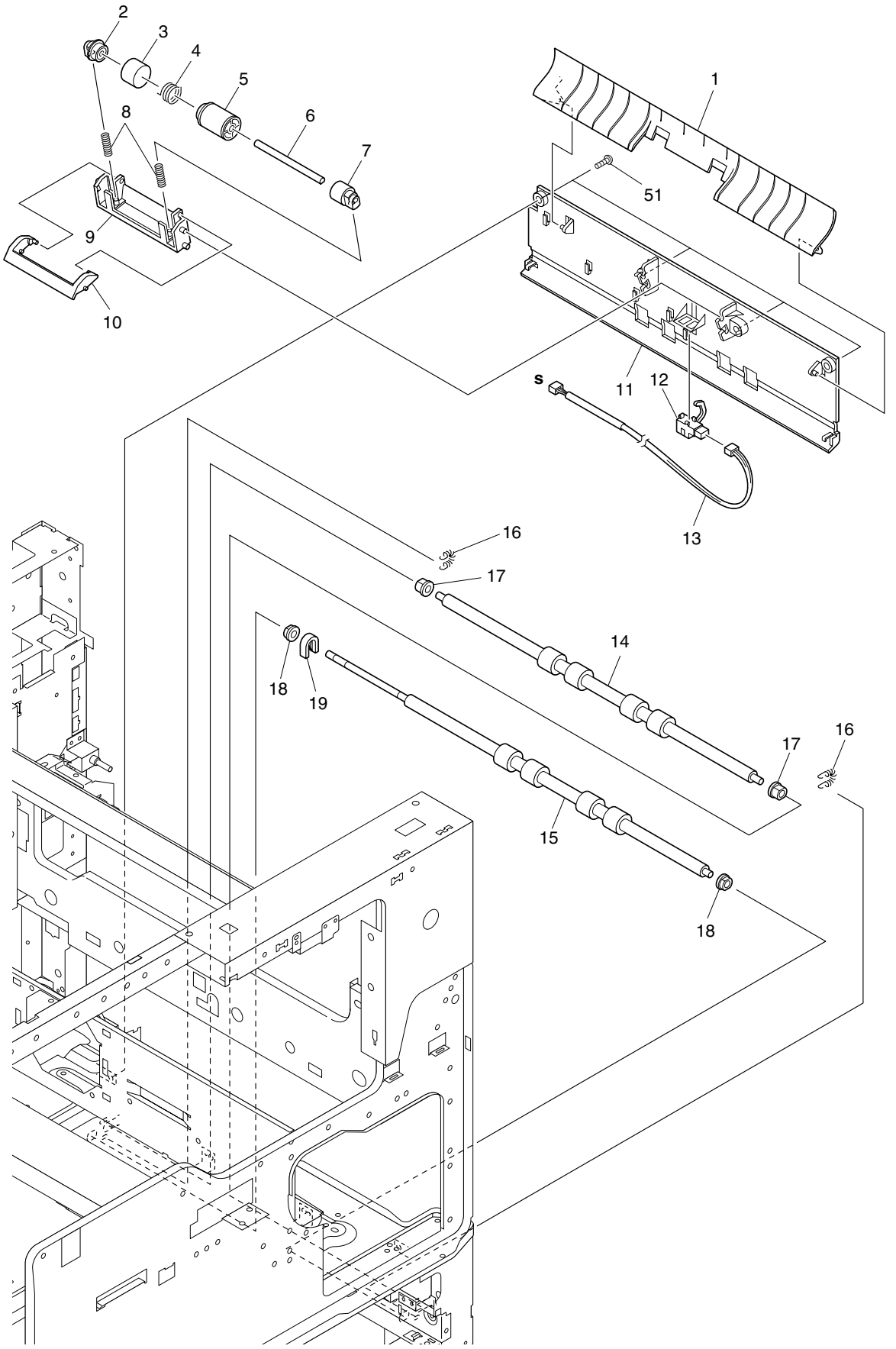
2
3
4
5
6
7
8
9
10
1
51
11
12
S
13
16
17
14
18
19
17
16
15
18

ITEM NO.	PARTS NO.	PARTS NAME	Q'TY / PAGE	Q'TY / PACK	P	I	R	BSI NO.	TO	T	FROM	SERIAL NO.	REMARKS	C
1	41306018000	GUIDE-1ST-AT	1	1/P										
2	4401964270	ARBOR-SPT-R	1	1/P										
3	4400683950	COVER-SPE/ARBOR	1	1/P										
4	4401784210	SPR-1.0-15·60RF	1	5/P					4-1					
4-1	44201817000	SPR-1.0-15.60RF	1	5/P	E	B	J	G01K781			4			
5	4401964290	K-ROLL-SPT	1	1/P					5-1					MSP
6	41304506000	SFT-SEP-AT	1	1/P										
7	4401964360	ARBOR-SPT-F	1	1/P										
8-1	44201806000	SPC054-045-0170	2	5/P										
9	41306013000	HOLDER-RLR-SEP	1	1/P					9A					
9A	41306013000	HOLDER-RLR-SEP	1	1/P	-	-	-	G01C317			9		DP1600	
9B	41314013000	HLDR-RLR-SEP	1	1/P	A	-	J	G01C317					DP2000/2500	
10	41306014000	LEVER-RLR-SEP	1	1/P										
11	41306017000	GUIDE-2ND-AT	1	1/P										
12	4401983080	SZ-FED-210	1	1/C										
13	41301064000	WH-2PFS-AT	1	1/P										
14	41306510000	ROLLER-2ND-P	1	1/P										
15	41306509000	ROLLER-2ND	1	1/P										
16	4408302710	SPRING-770	2	5/P										
17	4407976990	BUSH-D6-GCB	2	1/P										
18	4407734980	BUSH-6-GCB	2	5/P										
19	4407972860	STOP-RING-6-5	1	5/P										
51	4842040685	TBID3008MSZN3A	4	50/P										

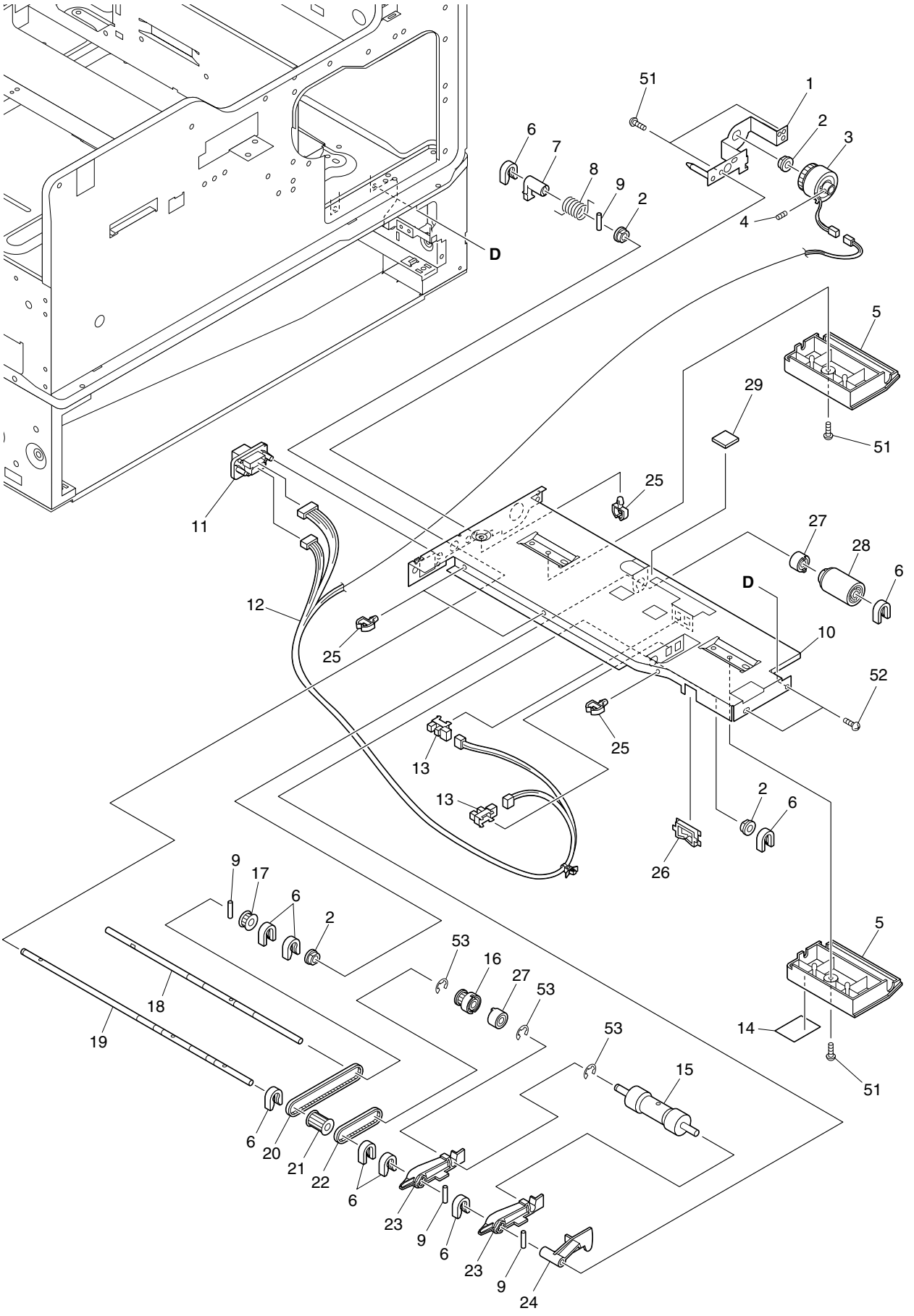
51
1
2
3
6
7
8
9
2
4
D
5
29
51
25
11
27
28
6
D
12
10
25
52
25
13
13
2
6
26
9
17
6
2
53
16
27
53
5
18
19
14
53
15
51
6
20
21
22
6
23
9
6
23
9
24

ITEM NO.	PARTS NO.	PARTS NAME	Q'TY / PAGE	Q'TY / PACK	P	I	R	BSI NO.	TO	T	FROM	SERIAL NO.	REMARKS	C
1	41304001000	K-PL-CLT-FEED	1	1/P										
2	44201492000	BUSH-6-POM	4	5/P										
3	41306508000	CLUTCH-8K-CW-6	1	1/C										
4	4842011062	9HSS30/04MSFB	1	50/P										
5	41306015000	GUIDE-FRM-FEED	2	1/P										
6	4407972860	STOP-RING-6-5	9	5/P										
7	41306005000	LEVER-RLR-PICK	1	1/P										
8	41305501000	SPR-LVR-PICK	1	1/P										
9	4842904019	HPIN20/08SUSH7	4	50/P										
10	41305010000	FRM-RLR-FEED	1	1/P										
11	4843309862	J-54702-1211	1	5/P										
12	41301063000	WH-1CST-AT	1	1/P										
13	4408683480	SZ-GP1A73A	2	1/C										
14	41306953000	FILM-PICK-UP	1	1/KP										
15	41306719000	ROLLER-PICK-AT	1	1/P										MSP
16	4402231780	PLY-20-2M	1	1/P										
17	4400884670	PLY-20-ROL	1	1/P										
18	41304508000	SFT-ROL-FEED	1	1/P										
19	41304507000	SFT-DRV-PICK	1	1/P										
20	41306504000	BLT/T-194-2GT-2	1	1/P										
21	41306002000	PLY/T-PICK-20	1	1/P										
22	41306502000	BLT/T-124-2GT-2	1	1/P										
23	41306011000	ARM-RLR-PICK	2	1/P										
24	41306012000	ACTR-EMPTY-PPR	1	1/P										
25	4843391391	CLP/W-UAMS-05-2	4	5/P										
26	4843390942	BD/W-EDS-2	1	10/P										
27	4402833110	CLUTCH-6-L	2	1/P										
28	4401964410	K-ROLL-FEED	1	1/P										MSP
29	41307589000	SPACER-FRM-FEED	1	5/P										
51	4842040683	TBID30*06MSZN3A	4	50/P										
52	4842040685	TBID3008MSZN3A	2	50/P										
53	4842090312	ERR050SKZN3A	3	50/P										

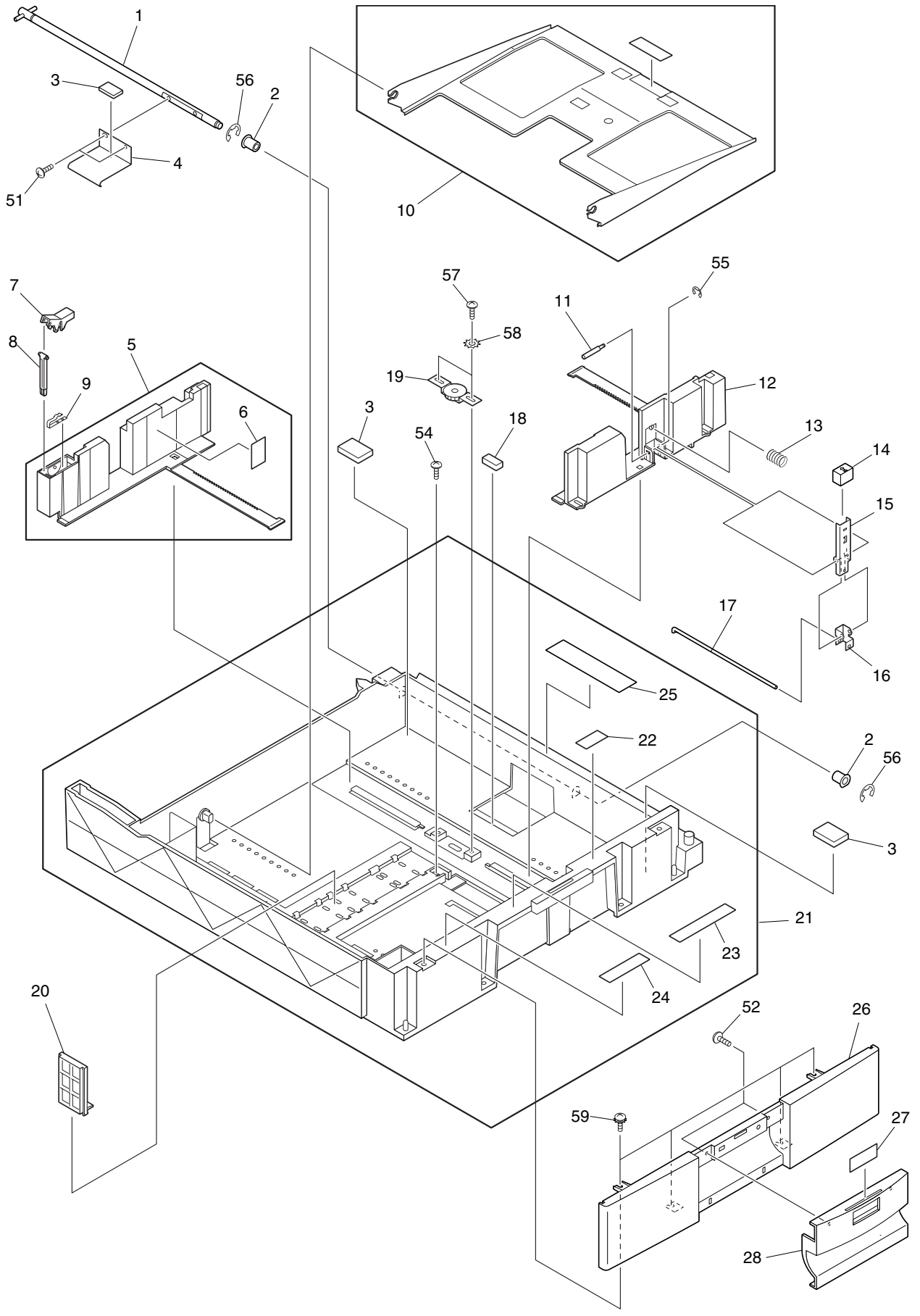
1
3
56
2
4
51
10
7
8
5
9
6
57
58
19
3
54
18
11
55
12
13
14
15
17
16
25
22
2
56
3
21
23
24
20
52
26
59
27
28

ITEM NO.	PARTS NO.	PARTS NAME	Q'TY / PAGE	Q'TY / PACK	P	I	R	BSI NO.	TO	T	FROM	SERIAL NO.	REMARKS	C
1	41304004000	K-SFT-LIFT-TRAY	1	1/P										
2	41306028000	BUSH-SFT-LIFT	2	5/P										
3	41306517000	CUSH-TRAY-CST	3	1/P										
4	41305014000	LVR-LIFT-TRAY	1	1/P										
5	41304065000	K-WALL-SIDE-R	1	1/PP										
6	41306694000	LBL/O-P-MAX	1	5/P					6-1					
6-1	41307701000	LBL/O-P-MAX	1	5/P	C	B	J	G01B283			6			
7	41306261000	LVR-LOC-WALL-R	1	1/P										
8	41306260000	LOCK-WALL-R	1	1/P										
9	41305546000	SPL-LOCK-WALL-R	1	1/P										
10	41304006000	K-TRAY-CST-AT	1	1/PP										
11	41304510000	PIN-ADJUST-LVR	1	1/P										
12	41306033000	WALL-SIDE-F-AT	1	1/KP										
13	41305503000	SPC-LVR-WALL	1	1/P										
14	41306030000	LID-LVR-ADJUST	1	1/P										
15	41305015000	LVR-ADJUST-WALL	1	1/P										
16	41305012000	PL-ADJUST-WALL	1	1/P										
17	41304511000	PIN-ADJUST-WALL	1	1/P										
18	41306614000	CUSH-LVR-LIFT	1	5/P										
19	41304005000	K-PL-PINION-TRY	1	1/P										
20	41306031000	WALL-END-AT	1	1/P										
21	41304067000	K-CST-AT	1	1/PP										
22	41306696000	LBL/O-LD	1	5/P					22-1					
22-1	41307704000	LBL/O-LD	1	5/P	C	B	J	G01B283			22			
23	41306698000	LBL/O-GUIDE	1	1/KP					23-1					
23-1	41307703000	LBL/O-GUIDE	1	1/KP	C	B	J	G01B283			23			
24	41306692000	LBL/O-PAPER	1	5/P					24-1					
24-1	41307702000	LBL/O-PAPER	1	5/P	C	B	J	G01B283			24			
25	41306917000	SHEET-CST	1	1/KP					25-1					
25-1	41307599000	SHEET-CST	1	1/KP	E	B	J	G01B232			25			
26	41306183000	COV-CST	1	1/PP										
27A	41306706000	SHEET-CST-US	1	1/KP									LT	
27B	41306705000	SHEET-CST	1	1/KP									A4	
27C	41307607000	SHEET-CST-CN	1	1/KP									8K/16K	
28	41306184000	HANDLE-CST	1	1/PP										
51	4842040685	TBID3008MSZN3A	2	50/P										
52	4842042077	TBIDP3008MSZN3A	2	50/P										
53	7402204031	2TWAS40SKZN3A	4	50/P					53-1					
53-1	7402204031	2TWAS40SKZN3A	0	50/P	B	-	E	G01B284			53			
54	4842040846	PTBR30*08MSZN3A	2	50/P										
55	4842090308	ERR020SKZN3A	1	50/P										
56	4842090314	ERR070SKZN3A	2	50/P										
57	4842042080	PTBR30*10MSCR3C	2	50/P										
58	4842080090	TWAS030MSZN3A	2	50/P										
59	4842042073	TZPAN-M3*08P-3A	4	50/P					59-1					
59-1	4842042105	TBIDB30*10ZMSZN	4	10/P	C	B	E	G01B284			59			

ASM-FRAME

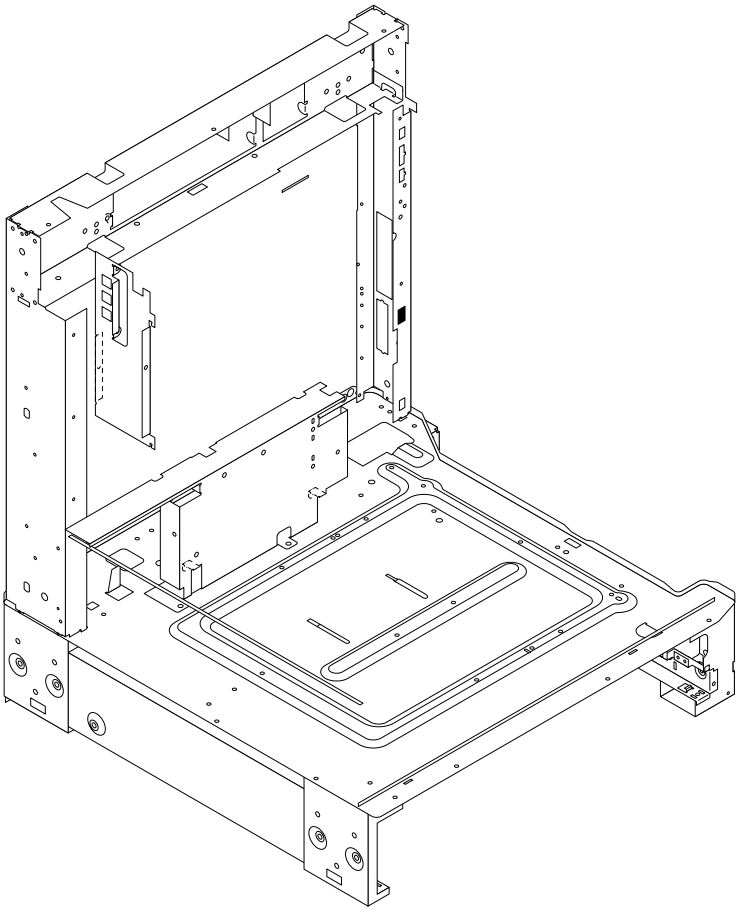

ITEM NO.	PARTS NO.	PARTS NAME	Q'TY / PAGE	Q'TY / PACK	P	I	R	BSI NO.	TO	T	FROM	SERIAL NO.	REMARKS	C
1	41304084000	K-STAY-F-S	1	1/PP										
2	41305022000	PLT-BASE-ADD	1	1/P										
3	41304064000	K-SFT-HANDLE	1	1/P										
4	41304064100	K-SFT-HANDLE	1	1/P										
5	41305017000	PLT-MDL-BASE	1	1/P										
6	41306007000	SLIDER-CST	6	1/P										
7	41301141000	THMS-DRM-AT	1	1/C					7-1					
8	41301140000	WH-DRMTHMS-AT	1	1/P					8-1					
9	41304054000	K-SP-TC	1	1/P										
10	4842413233	CLP-YMC-05-0	3	5/P										
11	41301006000	WH-CASSETTE-AT	1	1/P										
12	4843309863	J-55533-1211	1	5/P										
13	41306016000	STAY-CST-F	1	1/P										
14	41306008000	CATCH-CST	1	1/P										
15	4843232255	SP-CS1A-B2CA	2	1/D										
16	41306501000	FOOT-MAIN-AT	2	1/P										
17	4843391726	CLP/W-K-103G	1	5/P										
18	4843391391	CLP/W-UAMS-05-2	3	5/P										
51	4842040685	TBID3008MSZN3A	26	50/P					51-1					
51-1	4842040685	TBID3008MSZN3A	25	50/P	D	-	E	G01B281			51			
52	4842042074	TZPAN-M3*08S-3A	2	50/P										
53	4842090313	ERR060SKZN3A	2	50/P										
54	4842040370	TBID3006MSZN3L	1	50/P	A	-	E	G01B281						

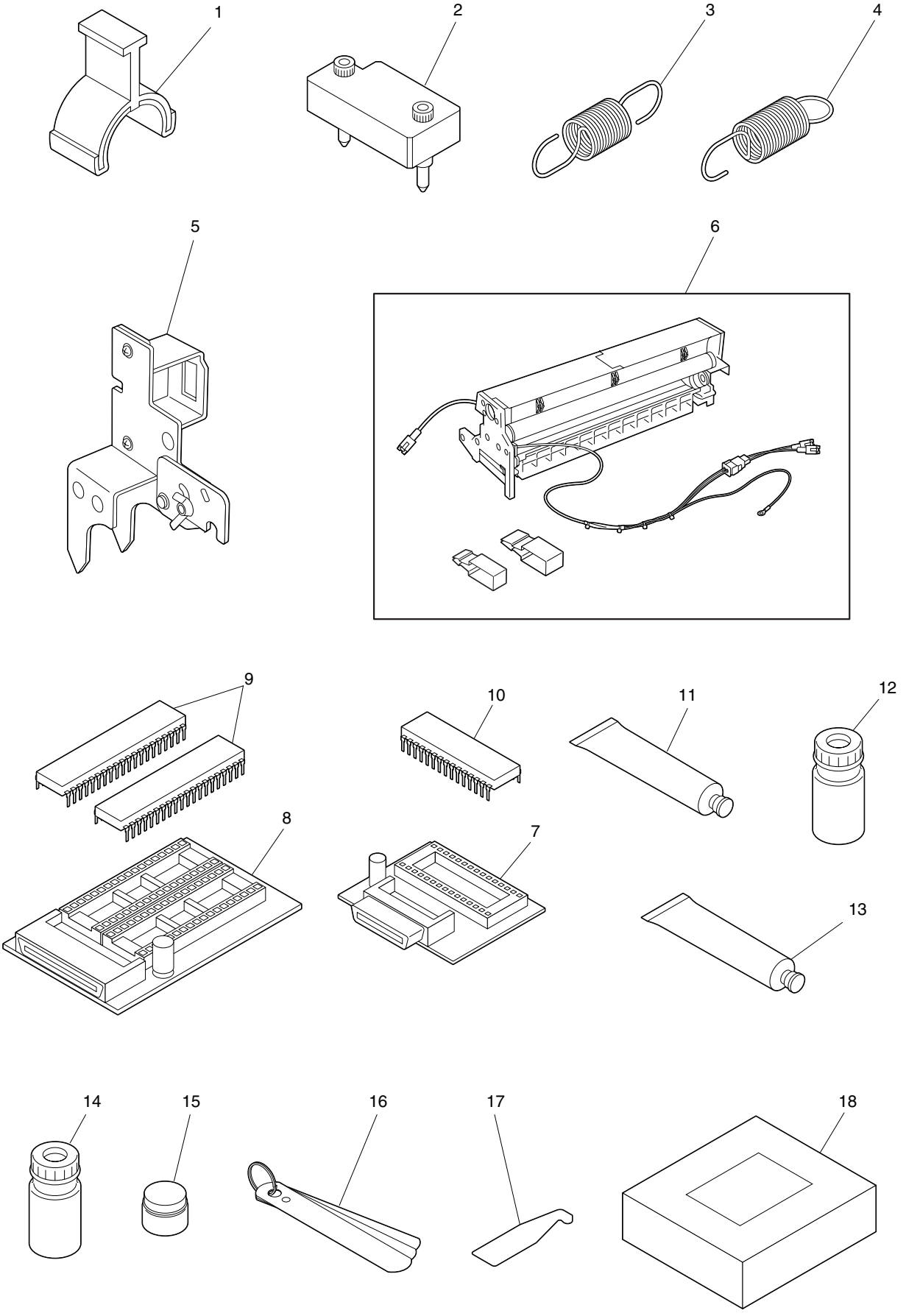
1
2
3
4
5
6
9
10
11
12
8
7
13
14
15
16
17
18

ITEM NO.	PARTS NO.	PARTS NAME	Q'TY / PAGE	Q'TY / PACK	P	I	R	BSI NO.	TO	T	FROM	SERIAL NO.	REMARKS	C
1	41306911000	SPE-TENS-WIRE	1	1/P					1-1				2 pcs. should be required for adjustment	
1-1	41306915000	ASM-HLD-W-AT	1	1/P	E	-	J	G01E455			1		2 pcs. should be required for adjustment	
2	41306913000	JIG-CCDUNIT-AT	1	1/P										
3	41306915000	ASM-HLD-W-AT	1	1/P					3-1					
3-1	41306911000	SPE-TENS-WIRE	1	1/P	E	-	J	G01E455			3			
4	41306912000	SPE-TENS-BELT	1	1/P										
5	41303024000	ASM-GBOX-JIG	1	1/C										
6	41303630000	ASM-P/U-TOOL	1	1/C										
7	41300532000	PWA-F-SCNRCV-AT	1	1/SB										
8	41300531000	PWA-F-RCV-AT	1	1/SB										
9	4843117732	IC-MSM27C1602CZ	2	1/S										
10	4843117582	IC-M27C4001-10F	1	1/S										
11	4400545160	MOLYKOTE-100	1	1/C	A	-	J	G01J732						
12	4407933080	ASM-SILICONE-1M	1	1/P	A	-	J	G01J732						
13	41303711000	ASM-PG-ALV2	1	1/C	A	-	J	G01J732						
14	41303709000	ASM-PG-HP300-S	1	1/C	A	-	J	G01J732						
15	41303710000	ASM-PG-GE334C-S	1	1/C	A	-	J	G01J732						
16	41307944000	K-JIG-DC-SL	1	1/P	A	-	J	G01J733					DP1600S/2000S/2500S (NAD, MJD, AUD, ASD, SAD, TWD)	
17	41335013000	MYLER-SCRAPER	1	5/P	A	-	J	G01J733					DP1600S/2000S/2500S (NAD, MJD, AUD, ASD, SAD, TWD)	
18	4407015430	P-POWDER-PPT001	1	1/P	A	-	J	G01J733					DP1600S/2000S/2500S (NAD, MJD, AUD, ASD, SAD, TWD)	

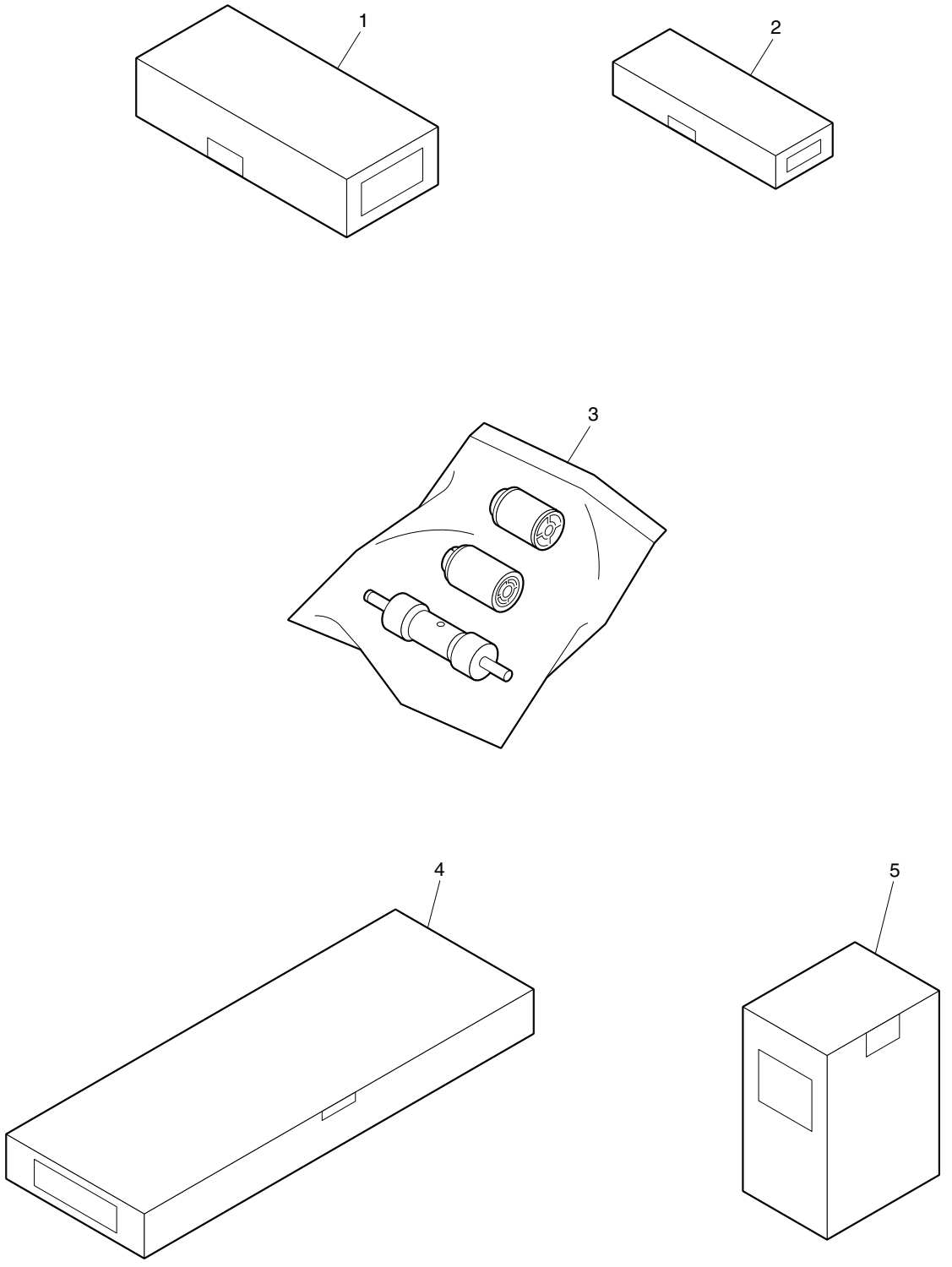
1
2
3
4
5

ITEM NO.	PARTS NO.	PARTS NAME	Q'TY / PAGE	Q'TY / PACK	P	I	R	BSI NO.	TO	T	FROM	SERIAL NO.	REMARKS	C
1	41303639000	FU-KIT-1600	1	1/S					1A				81K	KIT
1A	41303639000	FU-KIT-1600	1	1/S	-	-	-	G01C317			1		DP1600(81K)	KIT
1B	41303639100	FU-KIT-2500	1	1/S	A	-	J	G01C317					DP2000/2500(99K)	KIT
2	41303638000	CH-KIT-1600	1	1/S									81K/99K	KIT
3	41303640000	ROL-KIT-16CST	1	1/S									81K/99K	KIT
4	41303713000	PU-KIT-1600	1	1/S	A	-	J	G01J733					27K/33K DP16/20/2500S(NAD, MJD, AUD, ASD, SAD, TWD)	KIT
5	41303714000	DEV-KIT-1600	1	1/S	A	-	J	G01J733					27K/33K DP16/20/2500S(NAD, MJD, AUD, ASD, SAD, TWD)	KIT

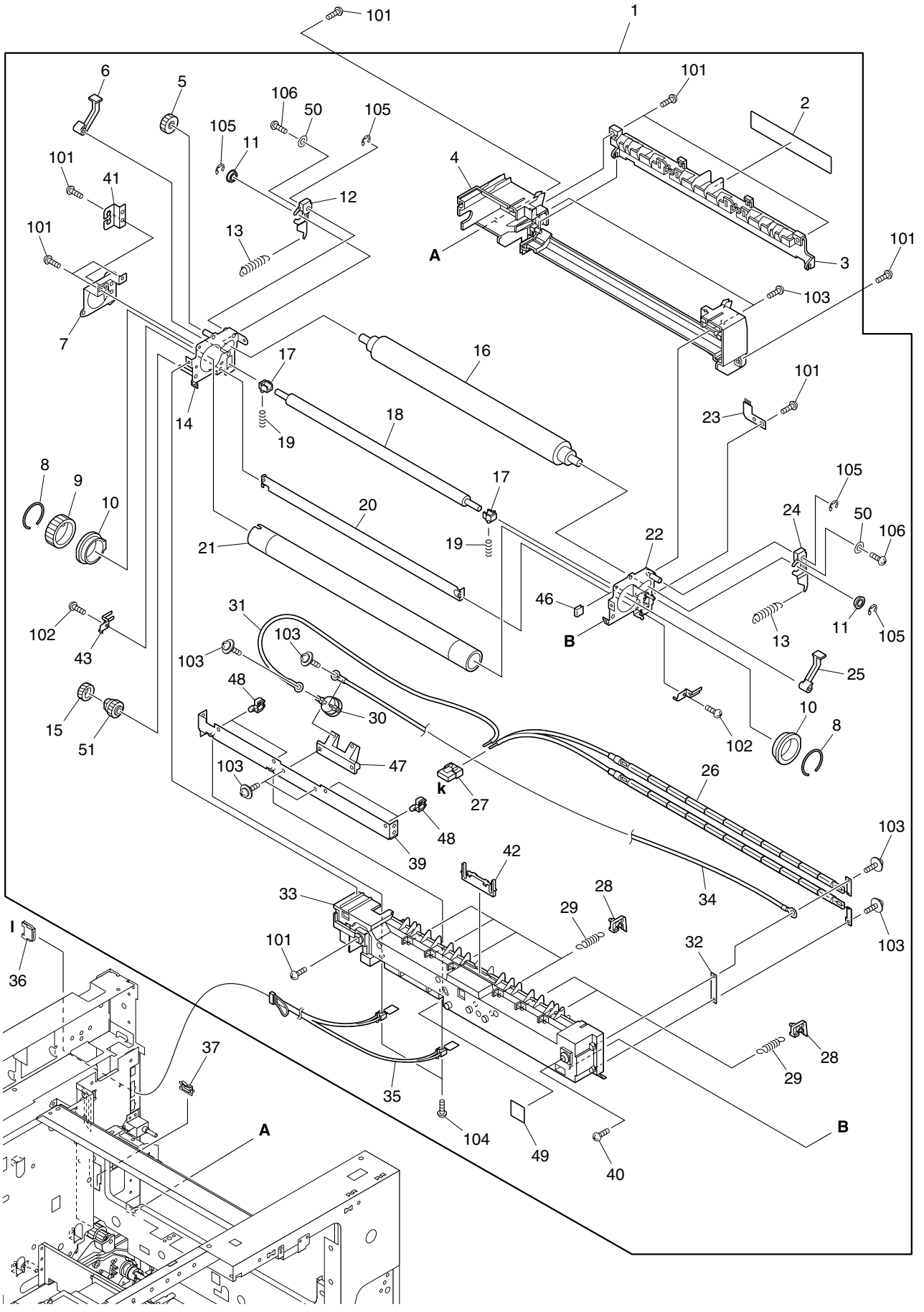
101
1
6
5
106
50
105
101
2
105
11
101
41
4
12
101
13
A
3
101
103
7
17
16
101
14
18
23
19
8
9
10
17
105
20
24
50
106
21
19
22
46
31
102
43
103
B
13
11
105
103
25
48
30
15
51
10
102
8
47
103
k
27
26
48
39
42
103
33
28
29
34
I
101
32
103
36
37
28
29
35
104
49
40
B
A

ITEM NO.	PARTS NO.	PARTS NAME	Q'TY / PAGE	Q'TY / PACK	P	I	R	BSI NO.	TO	T	FROM	SERIAL NO.	REMARKS	C
1A	41303607500	FUSER-2500-120	1	1/S	A	-	J	G01C317	1A-1				DP2000/2500(120V)	USP
1A-1	41303607500	FUSER-2500-120	1	1/S	-	-	-	G01J708	1A-2		1A		DP2000/2500(NAD, SAD)	USP
1A-2	41311535300	FUSER-2500-120	1	1/S	C	B	D	G01K772			1A-1		DP2000/2500(NAD, SAD)	USP
1B	41303607600	FUSER-2500-240	1	1/S	A	-	J	G01C317	1B-1				DP2000/2500(240V)	USP
1B-1	41311535400	FUSER-2500-240	1	1/S	C	B	D	G01K772			1B		DP2000/2500(240V)	USP
1C	41303607900	FUSER-2500-TW	1	1/S	F	-	J	G01J708	1C-1				DP2500 TWD	
1C-1	41311535500	FUSER-2500-TWD	1	1/S	C	B	D	G01K772			1C		DP2500 TWD	USP
2	41307590000	LBL/O-JAM-TSB	1	5/P	A	-	J	G01C317	2A				DP2000/2500	
2A	41307590000	LBL/O-JAM-TSB	1	5/P	-	-	-	G01J708			2		DP2000/2500	
													NAD, MJD, AUD, ASD, SAD, CND	
2C	41307833000	LBL/O-JAM-TWD	1	5/P	F	-	J	G01J708					DP2500 TWD	
3	41314021000	COVER-PR-AW	1	1/PP	A	-	J	G01C317					DP2000/2500	
4	41312018000	K-HSG-PR/RLR-AW	1	1/KP	A	-	J	G01C317					DP2000/2500	
5	41306061000	GEAR-HR/EXIT	1	1/P	A	-	J	G01C317					DP2000/2500	
6	41314016000	LEVER-PR-R-AW	1	1/P	A	-	J	G01C317					DP2000/2500	
7	41313026000	BRKT-HTR-1	1	1/P	A	-	J	G01C317					DP2000/2500	
8	41305515000	CRR-HT/RLR	2	5/P	A	-	J	G01C317					DP2000/2500	
9	41306341000	GEAR-HR/RLR	1	1/P	A	-	J	G01C317					DP2000/2500	
10	41306059000	BUSH-HR/RLR	2	1/P	A	-	J	G01C317					DP2000/2500	MSP
11	41314539000	BRG-LF126ZZLY13	1	1/P	A	-	J	G01C317					DP2000/2500	
12	41313034000	PLATE-LVR-R-AW	1	1/P	A	-	J	G01C317					DP2000/2500	
13	41305517000	SPE-PR30-200	2	1/P	A	-	J	G01C317					DP2000/2500	
14	41312028000	K-FRAME-HR-R-AW	1	1/P	A	-	J	G01C317					DP2000/2500	
15	41314011000	GEAR-HT/IDLE-AW	1	1/P	A	-	J	G01C317	15-1	S			DP2000/2500	MSP
									51					
15-1	41314028000	GER1-HT/IDLE-AW	1	1/P	C	E	J	G01F523			15		DP2000/2500	
16	41303608100	HR-2500-L	1	1/S	A	-	J	G01C317					DP2000/2500	CSP
17	41306058000	BUSH-CL-RLR	2	1/P	A	-	J	G01C317					DP2000/2500	MSP
18	41304523000	RLR-FUS-CLN	1	1/KP	A	-	J	G01C317					DP2000/2500	MSP
19	41305514000	SPC-CL-300	2	1/P	A	-	J	G01C317	19-1				DP2000/2500	
19-1	41305582000	SPC-CL-500	2	1/P	C	B	D	G01K772			19		DP2000/2500	
20	41313031000	GUIDE-PR/FU-AW	1	1/P	A	-	J	G01C317					DP2000/2500	
21	41303609100	HR-2500-U	1	1/S	A	-	J	G01C317					DP2000/2500	CSP
22	41312027000	K-FRAME-HR-F-AW	1	1/P	A	-	J	G01C317					DP2000/2500	
23	41306533000	BRUSH-FUSER-P	1	1/KP	A	-	J	G01C317					DP2000/2500	
24	41313035000	PLATE-LVR-F-AW	1	1/P	A	-	J	G01C317					DP2000/2500	
25	41314015000	LEVER-PR-F-AW	1	1/P	A	-	J	G01C317					DP2000/2500	
26A	41303610000	ASM-PG-HTR-S	1	1/S	A	-	J	G01C317					DP2000/2500(120V)	
26B	41303610100	ASM-PG-HTR-S	1	1/S	A	-	J	G01C317					DP2000/2500(220V)	
27	4843309864	J-VLP-03V	1	5/P	A	-	J	G01C317					DP2000/2500	
28	41306067000	SEP-HT/RLR	6	6/P	A	-	J	G01C317					DP2000/2500	MSP
29	41305516000	SPE-CLW	6	5/P	A	-	J	G01C317					DP2000/2500	
30	44205189000	THRM-CS-7TA-190	1	1/D	A	-	J	G01C317					DP2000/2500	
31	41301030000	WH-HTRLMP-AT	1	1/P	A	-	J	G01C317					DP2000/2500	
32	41313009000	SPL-LAMP-AW	1	1/P	A	-	J	G01C317					DP2000/2500	
33	41312019000	K-HSG-HR/RLR-AW	1	1/KP	A	-	J	G01C317					DP2000/2500	
34	41314524000	FUSER-HARNESS	1	1/P	A	-	J	G01C317					DP2000/2500	
35	41309012000	THMS-HTR-25	1	1/C	A	-	J	G01C317					DP2000/2500	
36	41301080000	WH-FDS2-STH-AT	1	1/P	A	-	J	G01C317					DP2000/2500	
37	4843390942	BD/W-EDS-2	1	10/P	A	-	J	G01C317					DP2000/2500	
38	41314534000	SHEET-FUS-AW	1	1/KP	A	-	J	G01C317	38-1				DP2000/2500	
38-1	41314534000	SHEET-FUS-AW	0	1/KP	B	-	D	G01K772			38		DP2000/2500	
39	41313010000	STAY-HF-SENS-AW	1	1/P	A	-	J	G01C317					DP2000/2500	
40	41306916000	SCREW-SPEAKER	1	10/P	A	-	J	G01C317					DP2000/2500	
41	41313008000	BRKT-HTR-2	1	1/P	A	-	J	G01C317					DP2000/2500	
42	41314020000	CAP-AW	1	1/P	A	-	J	G01C317					DP2000/2500	
43	41313017000	ARM-HOL-R-AW	1	1/P	A	-	J	G01C317					DP2000/2500	
44	41313018000	ARM-HOL-F-AW	1	1/P	A	-	J	G01C317					DP2000/2500	
45	41314537000	FILM-1	1	1/KP	A	-	J	G01C317	45-1				DP2000/2500	
45-1	41314537000	FILM-1	0	1/KP	B	-	D	G01K772			45		DP2000/2500	
46	41314538000	FILM-2	1	1/KP	A	-	J	G01C317					DP2000/2500	
47	41312017000	K-HOLDER-THERM	1	1/P	A	-	J	G01C317					DP2000/2500	
48	4843391499	CLP/W-UAMS05L46	4	10/P	A	-	J	G01C317					DP2000/2500	
49	41314571000	SHEET-REAR-AW	1	5/P	A	-	J	G01C317	49-1				DP2000/2500	
49-1	41314607000	SHEET-REAR-AW	1	1/KP	C	B	D	G01K772			49		DP2000/2500	
50	4842080243	OSWAS030PBNI3E	2	10/P	A	-	J	G01C317					DP2000/2500	
51	41314029000	GER2-HT/IDLE-AW	1	1/P	C	E	J	G01F523			15		DP2000/2500	
101	4842040370	TBID3006MSZN3L	10	50/P	A	-	J	G01C317					DP2000/2500	
102	4842040685	TBID3008MSZN3A	2	50/P	A	-	J	G01C317					DP2000/2500	
103	4842080197	ZPAN30*06MSZN3A	8	50/P	A	-	J	G01C317					DP2000/2500	

ITEM NO.	PARTS NO.	PARTS NAME	Q'TY / PAGE	Q'TY / PACK	P	I	R	BSI NO.	TO	T	FROM	SERIAL NO.	REMARKS	C
104	4842080163	ZPANS30*10ZN3A	2	10/P	A	-	J	G01C317					DP2000/2500	
105	7405004031	ERR040SKZN3A	4	50/P	A	-	J	G01C317					DP2000/2500	
106	4842041748	TZPAN-30*06S-3L	2	10/P	A	-	J	G01C317					DP2000/2500	

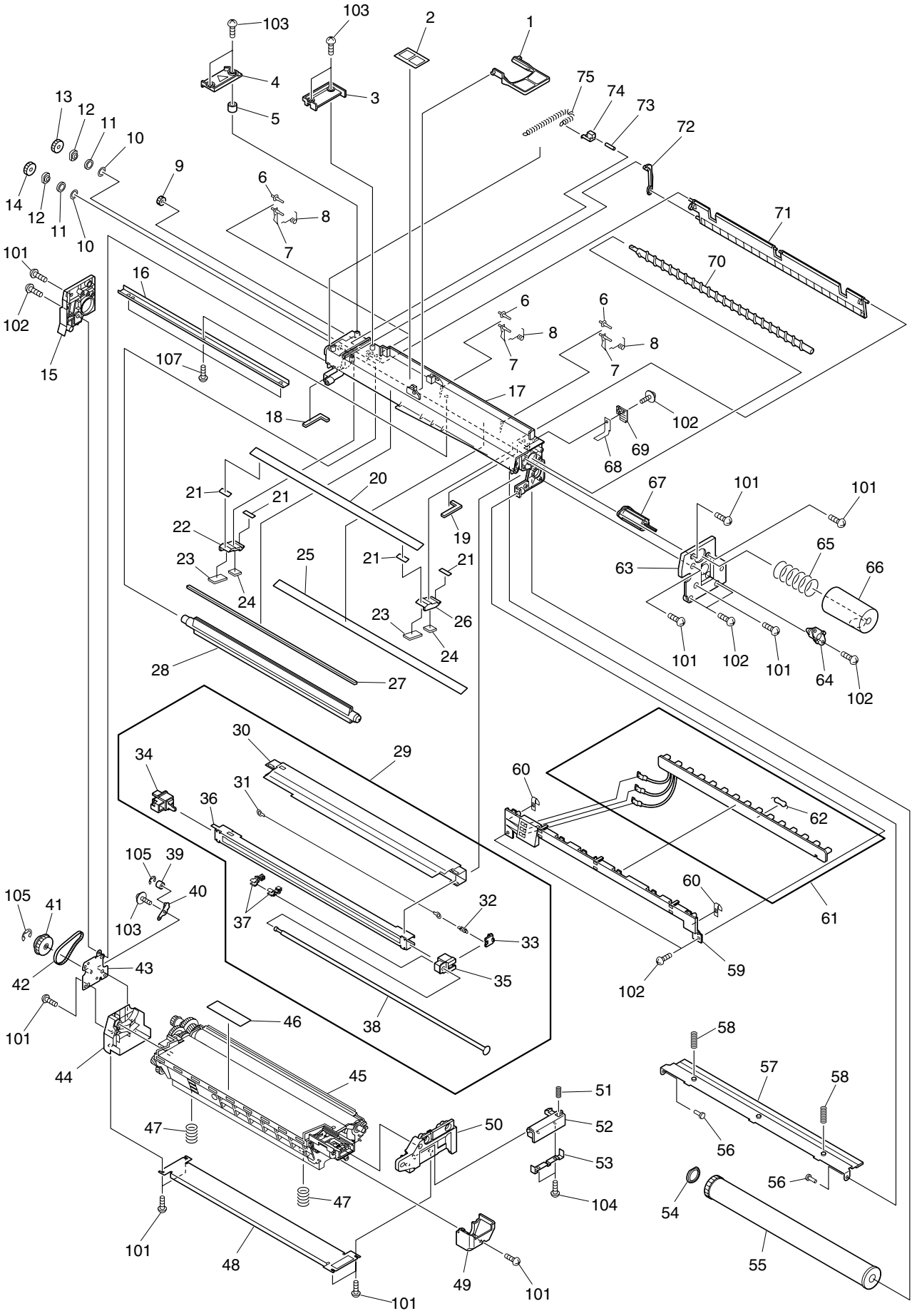
103
103
2
1
4
3
5
75
74
73
72
13
12
11
10
9
14
12
11
10
6
8
7
71
70
101
102
15
16
6
8
7
6
8
7
107
17
18
102
69
68
20
21
21
22
19
67
101
101
65
66
63
23
24
25
21
21
23
26
24
101
102
101
64
102
28
27
30
29
34
31
36
60
62
105
39
40
105
41
103
37
32
33
60
61
42
43
35
59
102
101
46
38
44
45
58
57
58
51
47
50
52
53
56
56
104
54
101
48
49
101
55
101

ITEM NO.	PARTS NO.	PARTS NAME	Q'TY / PAGE	Q'TY / PACK	P	I	R	BSI NO.	TO	T	FROM	SERIAL NO.	REMARKS	C
1	41306306000	HANDLE-PU-N	1	1/P	A	-	J	G01J733					DP1600S/2000S/2500S (NAD, MJD, AUD, ASD, SAD, TWD)	
2	41306991000	LBL/O-PU-HANDLE	1	5/P	A	-	J	G01J733					DP1600S/2000S/2500S (NAD, MJD, AUD, ASD, SAD, TWD)	
3	41306289000	COV-GUIDE-ROD-F	1	1/P	A	-	J	G01J733					DP1600S/2000S/2500S (NAD, MJD, AUD, ASD, SAD, TWD)	
4	41306290000	COV-GUIDE-ROD-R	1	1/P	A	-	J	G01J733					DP1600S/2000S/2500S (NAD, MJD, AUD, ASD, SAD, TWD)	
5	41306287000	COLLAR	1	5/P	A	-	J	G01J733					DP1600S/2000S/2500S (NAD, MJD, AUD, ASD, SAD, TWD)	
6	41306325000	WHEEL-CLN-8	3	1/P	A	-	J	G01J733					DP1600S/2000S/2500S (NAD, MJD, AUD, ASD, SAD, TWD)	
7	41306384000	SCRAPER-DRUM-S	3	3/P	A	-	J	G01J733					DP1600S/2000S/2500S (NAD, MJD, AUD, ASD, SAD, TWD)	MSP
8	41305536000	SPD-SCRPR-DRUM	3	1/P	A	-	J	G01J733					DP1600S/2000S/2500S (NAD, MJD, AUD, ASD, SAD, TWD)	
9	41306123000	GEAR-04S023-04	1	1/P	A	-	J	G01J733					DP1600S/2000S/2500S (NAD, MJD, AUD, ASD, SAD, TWD)	
10	41307698000	WAS-CLN	2	5/P	A	-	J	G01J733					DP1600S/2000S/2500S (NAD, MJD, AUD, ASD, SAD, TWD)	
11	41307699000	SEAL-PADDLE-CLN	3	5/P	A	-	J	G01J733					DP1600S/2000S/2500S (NAD, MJD, AUD, ASD, SAD, TWD)	
12	41306567000	BUSH-O508*04-M	2	5/P	A	-	J	G01J733					DP1600S/2000S/2500S (NAD, MJD, AUD, ASD, SAD, TWD)	
13	41306121000	GEAR-04S030-04	1	1/P	A	-	J	G01J733					DP1600S/2000S/2500S (NAD, MJD, AUD, ASD, SAD, TWD)	
14	41306122000	GEAR-04S035-04	1	1/P	A	-	J	G01J733					DP1600S/2000S/2500S (NAD, MJD, AUD, ASD, SAD, TWD)	
15	41314026000	COV-PU-R-UPPER	1	1/P	A	-	J	G01J733					DP1600S/2000S/2500S (NAD, MJD, AUD, ASD, SAD, TWD)	
16	41305146000	PLT-DRUM-MAIN-S	1	1/P	A	-	J	G01J733					DP1600S/2000S/2500S (NAD, MJD, AUD, ASD, SAD, TWD)	
17	41312042000	K-COV-DRUM-MAIN	1	1/PP	A	-	J	G01J733					DP1600S/2000S/2500S (NAD, MJD, AUD, ASD, SAD, TWD)	
18	41314611000	SEAL-CLN-R-S	1	1/KP	A	-	J	G01J733					DP1600S/2000S/2500S (NAD, MJD, AUD, ASD, SAD, TWD)	
19	41314610000	SEAL-CLN-F-S	1	1/KP	A	-	J	G01J733					DP1600S/2000S/2500S (NAD, MJD, AUD, ASD, SAD, TWD)	
20	41306566000	SCRPR-PADDLE	1	1/KP	A	-	J	G01J733					DP1600S/2000S/2500S (NAD, MJD, AUD, ASD, SAD, TWD)	
21	41306663000	SEAL-BRKT-CLN	4	5/P	A	-	J	G01J733					DP1600S/2000S/2500S (NAD, MJD, AUD, ASD, SAD, TWD)	
22	41306612000	BRKT-CLN-R	1	1/P	A	-	J	G01J733					DP1600S/2000S/2500S (NAD, MJD, AUD, ASD, SAD, TWD)	
23	41306568000	SEAL-CLN-U	2	5/P	A	-	J	G01J733					DP1600S/2000S/2500S (NAD, MJD, AUD, ASD, SAD, TWD)	
24	41306569000	SEAL-CLN-L	2	5/P	A	-	J	G01J733					DP1600S/2000S/2500S (NAD, MJD, AUD, ASD, SAD, TWD)	
25	41306575000	SHEET-RECOV	1	1/KP	A	-	J	G01J733					DP1600S/2000S/2500S (NAD, MJD, AUD, ASD, SAD, TWD)	MSP
26	41306611000	BRKT-CLN-F	1	1/P	A	-	J	G01J733					DP1600S/2000S/2500S (NAD, MJD, AUD, ASD, SAD, TWD)	
27	41306565000	SEAL-CLN-A	1	1/KP	A	-	J	G01J733					DP1600S/2000S/2500S (NAD, MJD, AUD, ASD, SAD, TWD)	
28	41304034000	K-PADDLE-CLN	1	1/P	A	-	J	G01J733					DP1600S/2000S/2500S (NAD, MJD, AUD, ASD, SAD, TWD)	
29	41311531000	ASM-CASE-CHGR-S	1	1/PP	A	-	J	G01J733					DP1600S/2000S/2500S (NAD, MJD, AUD, ASD, SAD, TWD)	
30	41312033000	K-GRID-13	1	1/KP	A	-	J	G01J733					DP1600S/2000S/2500S (NAD, MJD, AUD, ASD, SAD, TWD)	MSP
31	41307887000	WIRE-CHG-S	1	1/P	A	-	J	G01J733					DP1600S/2000S/2500S (NAD, MJD, AUD, ASD, SAD, TWD)	MSP
32	41305579000	SPE-WIRE-DRUM-2	1	1/P	A	-	J	G01J733					DP1600S/2000S/2500S (NAD, MJD, AUD, ASD, SAD, TWD)	
33	41306380000	BRKT-WIRE-CHGR	1	1/P	A	-	J	G01J733					DP1600S/2000S/2500S (NAD, MJD, AUD, ASD, SAD, TWD)	
34	41312035000	K-TERM-CHGR-R-S	1	1/P	A	-	J	G01J733					DP1600S/2000S/2500S (NAD, MJD, AUD, ASD, SAD, TWD)	
35	41314031000	TERM-CHGR-F	1	1/P	A	-	J	G01J733					DP1600S/2000S/2500S (NAD, MJD, AUD, ASD, SAD, TWD)	
36	41305149000	CASE-CHGR-N	1	1/PP	A	-	J	G01J733					DP1600S/2000S/2500S (NAD, MJD, AUD, ASD, SAD, TWD)	
37	41304026000	K-HLDR-PAD	2	1/P	A	-	J	G01J733					DP1600S/2000S/2500S (NAD, MJD, AUD, ASD, SAD, TWD)	MSP
38	41306130000	SFT-WIRE-CHG	1	1/P	A	-	J	G01J733					DP1600S/2000S/2500S	

ITEM NO.	PARTS NO.	PARTS NAME	Q'TY / PAGE	Q'TY / PACK	P	I	R	BSI NO.	TO	T	FROM	SERIAL NO.	REMARKS	C
39	41306334000	RLR-IDLER-DEV	1	1/P	A	-	J	G01J733					(NAD, MJD, AUD, ASD, SAD, TWD) DP1600S/2000S/2500S	
40	41304113000	K-PL-ROLLER-ID-	1	1/KP	A	-	J	G01J733					(NAD, MJD, AUD, ASD, SAD, TWD) DP1600S/2000S/2500S	
41	41306333000	PLY/T-45S2M	1	1/P	A	-	J	G01J733					(NAD, MJD, AUD, ASD, SAD, TWD) DP1600S/2000S/2500S	
42	41306872000	BELT-RLR-MG	1	1/P	A	-	J	G01J733					(NAD, MJD, AUD, ASD, SAD, TWD) DP1600S/2000S/2500S	
43	41312029000	K-PL-GEAR-MG-B	1	1/P	A	-	J	G01J733					(NAD, MJD, AUD, ASD, SAD, TWD) DP1600S/2000S/2500S	
44	41314027000	COV-PU-R-UNDR	1	1/PP	A	-	J	G01J733					(NAD, MJD, AUD, ASD, SAD, TWD) DP1600S/2000S/2500S	
45	41311530000	ASM-DEV-UNIT-S	1	1/C	A	-	J	G01J733					(NAD, MJD, AUD, ASD, SAD, TWD) DP1600S/2000S/2500S	
46	41307758000	LBL/O-PU	1	5/P	A	-	J	G01J733					(NAD, MJD, AUD, ASD, SAD, TWD) DP1600S/2000S/2500S	
47	41305553000	SPE-PU-SIDE	2	5/P	A	-	J	G01J733					(NAD, MJD, AUD, ASD, SAD, TWD) DP1600S/2000S/2500S	
48	41305071000	SUPPORT-PU	1	1/P	A	-	J	G01J733					(NAD, MJD, AUD, ASD, SAD, TWD) DP1600S/2000S/2500S	
49	41304050000	K-TRAY-NZL-TNR	1	1/P	A	-	J	G01J733					(NAD, MJD, AUD, ASD, SAD, TWD) DP1600S/2000S/2500S	
50A	41312030000	K-COV-PU-F-UNDR	1	1/PP	A	-	J	G01J733					(NAD, MJD, AUD, ASD, SAD, TWD) DP1600S/2000S/2500S	
50B	41312030100	K-COV-PU-F-UNDR	1	1/PP	A	-	J	G01J733					(AUD, ASD, SAD, TWD) DP1600S/2000S/2500S (NAD)	
50C	41312030200	K-COV-PU-F-UNDR	1	1/PP	A	-	J	G01J733					DP1600S/2000S/2500S (MJD)	
51	41305542000	SPC-HOOK-PU	1	5/P	A	-	J	G01J733					DP1600S/2000S/2500S	
52	41306344000	HOOK-PU	1	1/P	A	-	J	G01J733					(NAD, MJD, AUD, ASD, SAD, TWD) DP1600S/2000S/2500S	
53	41306345000	HOOK-PU-SUPPORT	1	1/P	A	-	J	G01J733					(NAD, MJD, AUD, ASD, SAD, TWD) DP1600S/2000S/2500S	
54	41306135000	BUSH-1821*03-M	1	1/P	A	-	J	G01J733					(NAD, MJD, AUD, ASD, SAD, TWD) DP1600S/2000S/2500S	
55	41303611000	OD-1600	1	1/S	A	-	J	G01J733					(NAD, MJD, AUD, ASD, SAD, TWD) DP1600S/2000S/2500S	DRM
56	41312508000	STUD-CLN-S	2	1/P	A	-	J	G01J733					(NAD, MJD, AUD, ASD, SAD, TWD) DP1600S/2000S/2500S	
57	41303612000	BL-1600D	1	1/S	A	-	J	G01J733					(NAD, MJD, AUD, ASD, SAD, TWD) DP1600S/2000S/2500S	CSP
58	41305532000	SPC-BLADE-CLN	2	5/P	A	-	J	G01J733					(NAD, MJD, AUD, ASD, SAD, TWD) DP1600S/2000S/2500S	
59	41312032000	K-COV-DRUM-SUB	1	1/PP	A	-	J	G01J733					(NAD, MJD, AUD, ASD, SAD, TWD) DP1600S/2000S/2500S	
60	41313505000	SPL-CHGR	2	5/P	A	-	J	G01J733					(NAD, MJD, AUD, ASD, SAD, TWD) DP1600S/2000S/2500S	
61	41300510000	PWA-F-DLE-AT	1	1/C	A	-	J	G01J733					(NAD, MJD, AUD, ASD, SAD, TWD) DP1600S/2000S/2500S	
62	4843078009	RF-Z2EP75ROG	1	5/P	A	-	J	G01J733					(NAD, MJD, AUD, ASD, SAD, TWD) DP1600S/2000S/2500S	
63	41314024000	COV-PU-F-UPPER	1	1/P	A	-	J	G01J733					(NAD, MJD, AUD, ASD, SAD, TWD) DP1600S/2000S/2500S	
64	41314030000	BRKT-DRUM	1	1/P	A	-	J	G01J733					(NAD, MJD, AUD, ASD, SAD, TWD) DP1600S/2000S/2500S	
65	41305556000	NZL-CLN-SP	1	1/P	A	-	J	G01J733					(NAD, MJD, AUD, ASD, SAD, TWD) DP1600S/2000S/2500S	
66	41306282000	SHUTTER-CLN-N	1	1/P	A	-	J	G01J733					(NAD, MJD, AUD, ASD, SAD, TWD) DP1600S/2000S/2500S	
67	41304049000	K-NOZZLE-CLN	1	1/P	A	-	J	G01J733					(NAD, MJD, AUD, ASD, SAD, TWD) DP1600S/2000S/2500S	
68	41307886000	PAD-BRK-DRUM-3	1	5/P	A	-	J	G01J733					(NAD, MJD, AUD, ASD, SAD, TWD) DP1600S/2000S/2500S	
69	41306379000	PLT-BRK-S	1	1/P	A	-	J	G01J733					(NAD, MJD, AUD, ASD, SAD, TWD) DP1600S/2000S/2500S	
70	41306119000	AUGER-CLN	1	1/P	A	-	J	G01J733					(NAD, MJD, AUD, ASD, SAD, TWD) DP1600S/2000S/2500S	
71	41306350000	DRUM-SHUTTER	1	1/P	A	-	J	G01J733					(NAD, MJD, AUD, ASD, SAD, TWD) DP1600S/2000S/2500S	
72	41306291000	LINK-SHTR	1	1/P	A	-	J	G01J733					(NAD, MJD, AUD, ASD, SAD, TWD) DP1600S/2000S/2500S	
73	4842904021	HPIN20/14SUSH7	1	10/P	A	-	J	G01J733					(NAD, MJD, AUD, ASD, SAD, TWD) DP1600S/2000S/2500S	
74	41306288000	GUIDE-ROD	1	1/P	A	-	J	G01J733					(NAD, MJD, AUD, ASD, SAD, TWD) DP1600S/2000S/2500S	
													(NAD, MJD, AUD, ASD, SAD, TWD)	

ITEM NO.	PARTS NO.	PARTS NAME	Q'TY / PAGE	Q'TY / PACK	P	I	R	BSI NO.	TO	T	FROM	SERIAL NO.	REMARKS	C
75	41305552000	SPC-RPLC-SHTR	1	1/P	A	-	J	G01J733					DP1600S/2000S/2500S (NAD, MJD, AUD, ASD, SAD, TWD)	
101	4842042077	TBIDP3008MSZN3A	11	50/P	A	-	J	G01J733					DP1600S/2000S/2500S (NAD, MJD, AUD, ASD, SAD, TWD)	
102	4842080198	ZPAN30*08MSZN3C	7	50/P	A	-	J	G01J733					DP1600S/2000S/2500S (NAD, MJD, AUD, ASD, SAD, TWD)	
103	4842080197	ZPAN30*06MSZN3A	5	50/P	A	-	J	G01J733					DP1600S/2000S/2500S (NAD, MJD, AUD, ASD, SAD, TWD)	
104	41307538000	SRW-2.6X6P TITE	2	5/P	A	-	J	G01J733					DP1600S/2000S/2500S (NAD, MJD, AUD, ASD, SAD, TWD)	
105	4842090310	ERR030SKZN3A	2	50/P	A	-	J	G01J733					DP1600S/2000S/2500S (NAD, MJD, AUD, ASD, SAD, TWD)	
106	4842040711	TPPAN3008MSZN3A	1	50/P	A	-	J	G01J733					DP1600S/2000S/2500S (NAD, MJD, AUD, ASD, SAD, TWD)	
107	41314612000	TFLP3*08ZN3A	3	10/P	A	-	J	G01J733					DP1600S/2000S/2500S (NAD, MJD, AUD, ASD, SAD, TWD)	

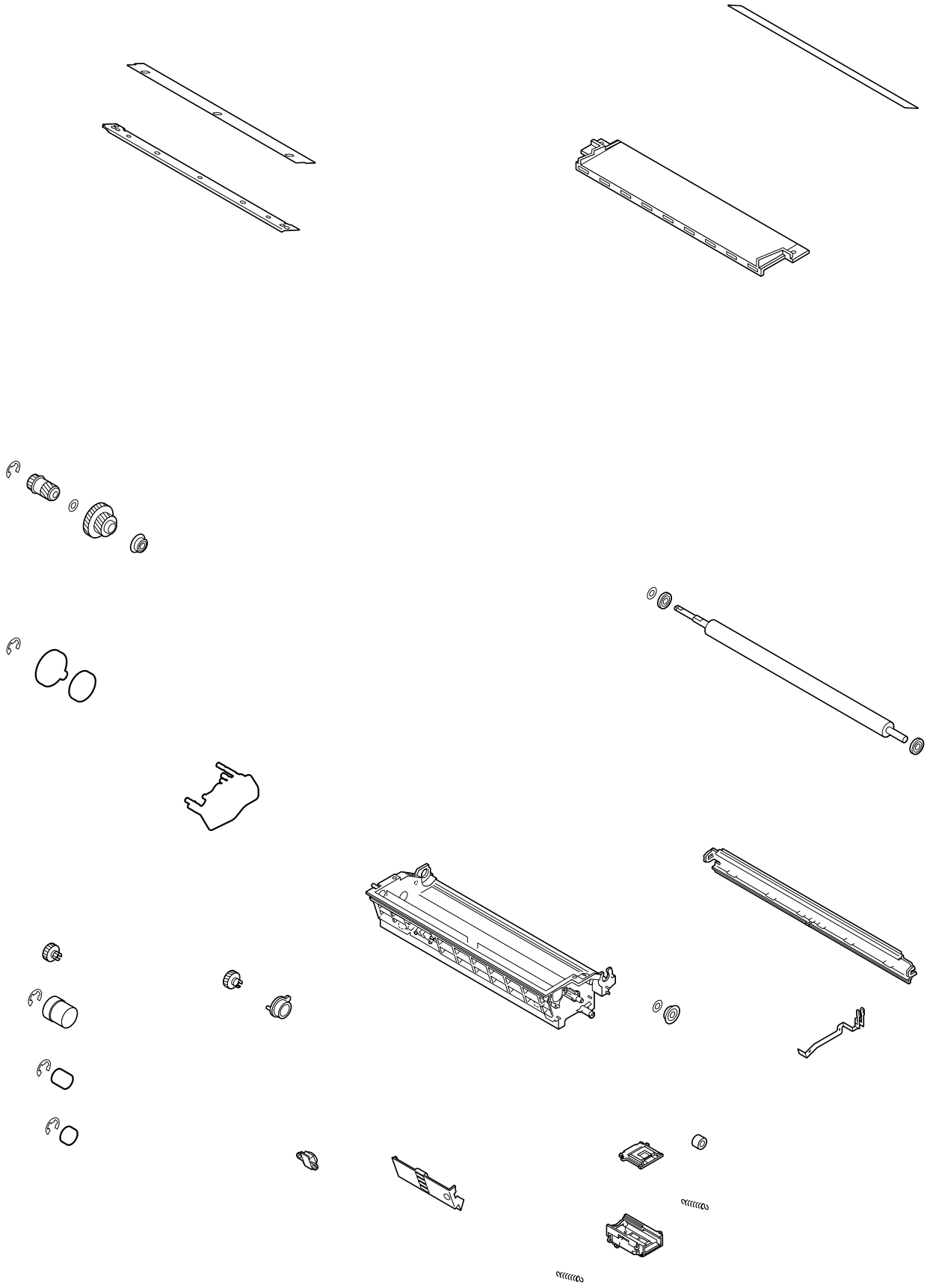

ITEM NO.	PARTS NO.	PARTS NAME	Q'TY / PAGE	Q'TY / PACK	P	I	R	BSI NO.	TO	T	FROM	SERIAL NO.	REMARKS	C
1	41306116000	COVER-DEV	1	1/P	A	-	J	G01J733					DP1600S/2000S/2500S (NAD, MJD, AUD, ASD, SAD, TWD)	
2	41306960000	SHEET-COVER	1	1/KP	A	-	J	G01J733					DP1600S/2000S/2500S (NAD, MJD, AUD, ASD, SAD, TWD)	
3	41307580000	SHEET-COVER-B	1	5/P	A	-	J	G01J733					DP1600S/2000S/2500S (NAD, MJD, AUD, ASD, SAD, TWD)	
4	41307713000	SHEET-COVER-C	1	5/P	A	-	J	G01J733					DP1600S/2000S/2500S (NAD, MJD, AUD, ASD, SAD, TWD)	
5	41304020000	K-AGIATOR-DEV	1	1/P	A	-	J	G01J733					DP1600S/2000S/2500S (NAD, MJD, AUD, ASD, SAD, TWD)	
6	41305059000	BLADE-DOCTOR	1	1/P	A	-	J	G01J733					DP1600S/2000S/2500S (NAD, MJD, AUD, ASD, SAD, TWD)	
7	41307726000	SEAL-BLADE-R2	1	5/P	A	-	J	G01J733					DP1600S/2000S/2500S (NAD, MJD, AUD, ASD, SAD, TWD)	
8	41305060000	BRKT-BLADE-DEV	1	1/P	A	-	J	G01J733					DP1600S/2000S/2500S (NAD, MJD, AUD, ASD, SAD, TWD)	
9	41306550000	SEAL-CASE-FR	1	5/P	A	-	J	G01J733					DP1600S/2000S/2500S (NAD, MJD, AUD, ASD, SAD, TWD)	
10	41306552000	SEAL-CASE-REAR	1	5/P	A	-	J	G01J733					DP1600S/2000S/2500S (NAD, MJD, AUD, ASD, SAD, TWD)	
11	41306327000	GEAR-RLR-MG-B	1	1/P	A	-	J	G01J733					DP1600S/2000S/2500S (NAD, MJD, AUD, ASD, SAD, TWD)	
12	41306564000	WASHER-THRUST	1	5/P	A	-	J	G01J733					DP1600S/2000S/2500S (NAD, MJD, AUD, ASD, SAD, TWD)	
13	41306103000	GEAR-SLEEVE-DEV	1	1/P	A	-	J	G01J733					DP1600S/2000S/2500S (NAD, MJD, AUD, ASD, SAD, TWD)	
14	41307761000	BRG-LF1280LY13	2	1/P	A	-	J	G01J733					DP1600S/2000S/2500S (NAD, MJD, AUD, ASD, SAD, TWD)	
15	41306104000	GEAR-IDLER-A	1	1/P	A	-	J	G01J733					DP1600S/2000S/2500S (NAD, MJD, AUD, ASD, SAD, TWD)	
16	41306099000	GEAR-IDLER-C	1	1/P	A	-	J	G01J733					DP1600S/2000S/2500S (NAD, MJD, AUD, ASD, SAD, TWD)	
17	41305091000	BRKT-CASE-DEV	1	1/P	A	-	J	G01J733					DP1600S/2000S/2500S (NAD, MJD, AUD, ASD, SAD, TWD)	
18	41304052000	K-PLTE-GER-STD-	1	1/P	A	-	J	G01J733					DP1600S/2000S/2500S (NAD, MJD, AUD, ASD, SAD, TWD)	
19	41306866000	SEAL-BUSH-AGITA	2	5/P	A	-	J	G01J733					DP1600S/2000S/2500S (NAD, MJD, AUD, ASD, SAD, TWD)	
20	41306097000	BUSH-AGITATOR	2	5/P	A	-	J	G01J733					DP1600S/2000S/2500S (NAD, MJD, AUD, ASD, SAD, TWD)	
21	41306264000	SEAL-TONER	3	5/P	A	-	J	G01J733					DP1600S/2000S/2500S (NAD, MJD, AUD, ASD, SAD, TWD)	
22	41306100000	GEAR-IDLER-D	1	1/P	A	-	J	G01J733					DP1600S/2000S/2500S (NAD, MJD, AUD, ASD, SAD, TWD)	
23	41306105000	GEAR-IDLER-B	1	1/P	A	-	J	G01J733					DP1600S/2000S/2500S (NAD, MJD, AUD, ASD, SAD, TWD)	
24	41306101000	GEAR-AGITA-DEV	1	1/P	A	-	J	G01J733					DP1600S/2000S/2500S (NAD, MJD, AUD, ASD, SAD, TWD)	
25	41306313000	GEAR-IDLER-G	1	1/P	A	-	J	G01J733					DP1600S/2000S/2500S (NAD, MJD, AUD, ASD, SAD, TWD)	
26	41306315000	GEAR-IDLER-J	1	1/P	A	-	J	G01J733					DP1600S/2000S/2500S (NAD, MJD, AUD, ASD, SAD, TWD)	
27	41306314000	GEAR-IDLER-H	1	1/P	A	-	J	G01J733					DP1600S/2000S/2500S (NAD, MJD, AUD, ASD, SAD, TWD)	
28	41306312000	GEAR-AUGER-DEV	1	1/P	A	-	J	G01J733					DP1600S/2000S/2500S (NAD, MJD, AUD, ASD, SAD, TWD)	
29	41306867000	WASHER-THRUST-B	1	5/P	A	-	J	G01J733					DP1600S/2000S/2500S (NAD, MJD, AUD, ASD, SAD, TWD)	
30	41306094000	BUSH-AUGER	1	5/P	A	-	J	G01J733					DP1600S/2000S/2500S (NAD, MJD, AUD, ASD, SAD, TWD)	
31	41306684000	OT-SENSOR-TNR	1	1/C	A	-	J	G01J733					DP1600S/2000S/2500S (NAD, MJD, AUD, ASD, SAD, TWD)	
32	41303529000	ASM-HOLDER-TERM	1	1/P	A	-	J	G01J733					DP1600S/2000S/2500S (NAD, MJD, AUD, ASD, SAD, TWD)	
33	41304018000	K-SHUTTER-DEV	1	1/P	A	-	J	G01J733					DP1600S/2000S/2500S (NAD, MJD, AUD, ASD, SAD, TWD)	
34	41306299000	NOZZLE-DEV	1	1/P	A	-	J	G01J733					DP1600S/2000S/2500S (NAD, MJD, AUD, ASD, SAD, TWD)	
35	41305560000	SPE-SHUTTER	2	5/P	A	-	J	G01J733					DP1600S/2000S/2500S (NAD, MJD, AUD, ASD, SAD, TWD)	
36	41314600000	WASHER-TURUST-S	1	5/P	A	-	J	G01J733					DP1600S/2000S/2500S (NAD, MJD, AUD, ASD, SAD, TWD)	
37	41306873000	SEAL-SIDE-DEV	1	5/P	A	-	J	G01J733					DP1600S/2000S/2500S (NAD, MJD, AUD, ASD, SAD, TWD)	
38	41306717000	SEAL-EX-TNR-DEV	1	5/P	A	-	J	G01J733					DP1600S/2000S/2500S	

ITEM NO.	PARTS NO.	PARTS NAME	Q'TY / PAGE	Q'TY / PACK	P	I	R	BSI NO.	TO	T	FROM	SERIAL NO.	REMARKS	C
39	41312034000	K-AUGER-DEV-S	1	1/P	A	-	J	G01J733					(NAD, MJD, AUD, ASD, SAD, TWD) DP1600S/2000S/2500S	
40	41306117000	CASE-DEV	1	1/P	A	-	J	G01J733					(NAD, MJD, AUD, ASD, SAD, TWD) DP1600S/2000S/2500S	
41	41306678000	SPACER-10*8.1	2	5/P	A	-	J	G01J733					(NAD, MJD, AUD, ASD, SAD, TWD) DP1600S/2000S/2500S	
42	41305150000	TERM-BIAS-DEV-N	1	1/P	A	-	J	G01J733					(NAD, MJD, AUD, ASD, SAD, TWD) DP1600S/2000S/2500S	
43	41304038100	K-GUIDE-CASE	1	1/P	A	-	J	G01J733					(NAD, MJD, AUD, ASD, SAD, TWD) DP1600S/2000S/2500S	
44	41307736000	SPACER-DEV-SIDE	2	5/P	A	-	J	G01J733					(NAD, MJD, AUD, ASD, SAD, TWD) DP1600S/2000S/2500S	
45	41306975000	SEAL-CASE-D-FR	2	5/P	A	-	J	G01J733					(NAD, MJD, AUD, ASD, SAD, TWD) DP1600S/2000S/2500S	
46	41306546000	SEAL-SLEEVE-L	1	5/P	A	-	J	G01J733					(NAD, MJD, AUD, ASD, SAD, TWD) DP1600S/2000S/2500S	
47	41306549000	SEAL-BRKT-FR	2	5/P	A	-	J	G01J733					(NAD, MJD, AUD, ASD, SAD, TWD) DP1600S/2000S/2500S	
48	41306891000	SEAL-BRKT-DEV	2	5/P	A	-	J	G01J733					(NAD, MJD, AUD, ASD, SAD, TWD) DP1600S/2000S/2500S	
49	41306562000	SEAL-SLEEVE-R	1	5/P	A	-	J	G01J733					(NAD, MJD, AUD, ASD, SAD, TWD) DP1600S/2000S/2500S	
50	41306553000	SEAL-BRKT-REAR	2	5/P	A	-	J	G01J733					(NAD, MJD, AUD, ASD, SAD, TWD) DP1600S/2000S/2500S	
51	41306551000	SEAL-CASE-SIDE	2	5/P	A	-	J	G01J733					(NAD, MJD, AUD, ASD, SAD, TWD) DP1600S/2000S/2500S	
52	41307899000	ROLLER-MG-S	1	1/KP	A	-	J	G01J733					(NAD, MJD, AUD, ASD, SAD, TWD) DP1600S/2000S/2500S	
53	41306309100	ROLLER-DEV-GAP	2	1/KP	A	-	J	G01J733					(NAD, MJD, AUD, ASD, SAD, TWD) DP1600S/2000S/2500S	
101	4842042077	TBIDP3008MSZN3A	12	50/P	A	-	J	G01J733					(NAD, MJD, AUD, ASD, SAD, TWD) DP1600S/2000S/2500S	
102	41306674000	ZPAN-BLADE-DCT	3	10/P	A	-	J	G01J733					(NAD, MJD, AUD, ASD, SAD, TWD) DP1600S/2000S/2500S	
103	4842080106	WAS-3.5*7*0.5	1	5/P	A	-	J	G01J733					(NAD, MJD, AUD, ASD, SAD, TWD) DP1600S/2000S/2500S	
104	4842090310	ERR030SKZN3A	4	50/P	A	-	J	G01J733					(NAD, MJD, AUD, ASD, SAD, TWD) DP1600S/2000S/2500S	
105	4842090309	ERR025SKZN3A	1	50/P	A	-	J	G01J733					(NAD, MJD, AUD, ASD, SAD, TWD) DP1600S/2000S/2500S	
													(NAD, MJD, AUD, ASD, SAD, TWD)	

PWA-MAIN (1/2)

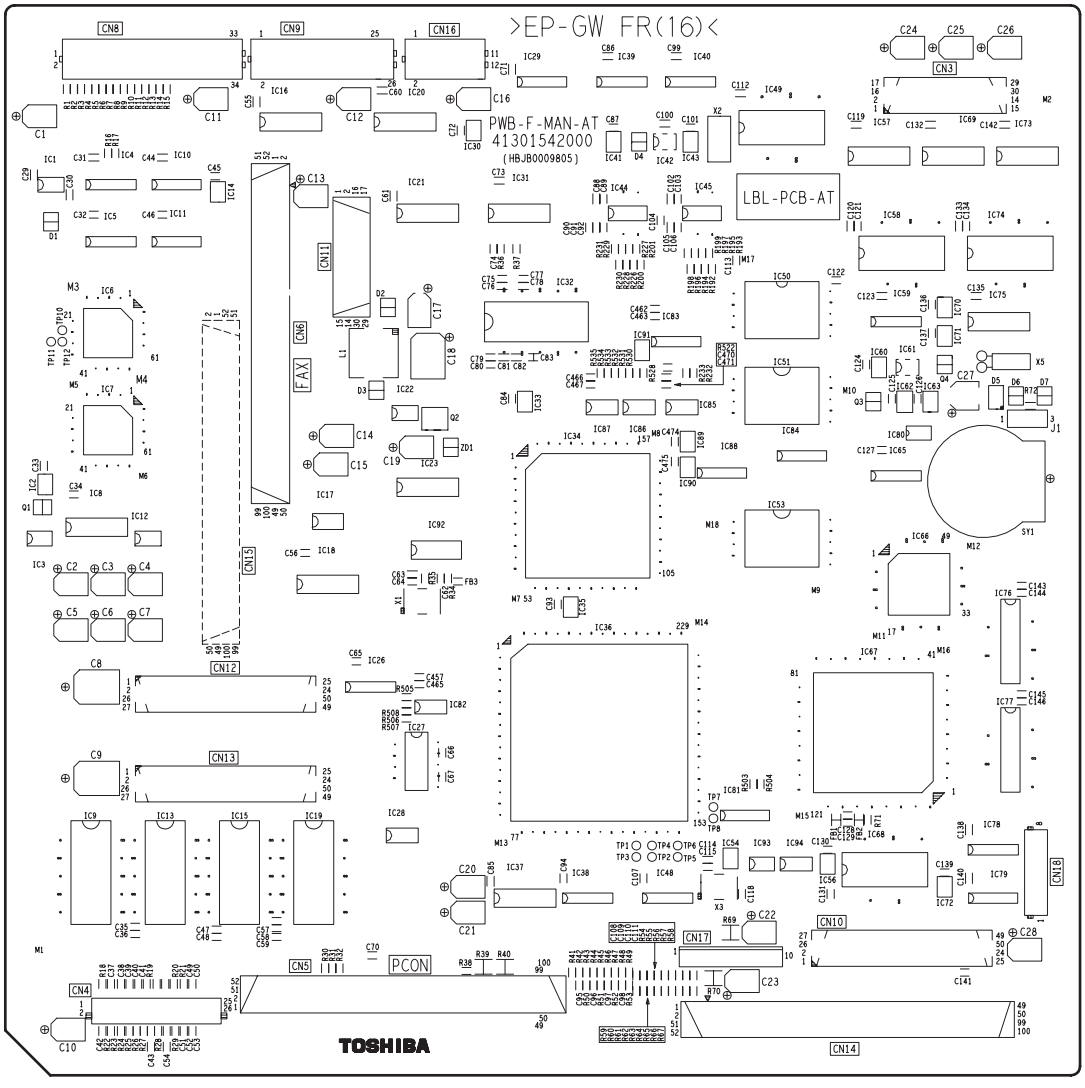
>EP-GW FR(16)<
PWB-F-MAN-AT
41301542000
(HBJB0009805)
LBL-PCB-AT
FAX
PCON
TOSHIBA

PWA-MAIN (1/2)

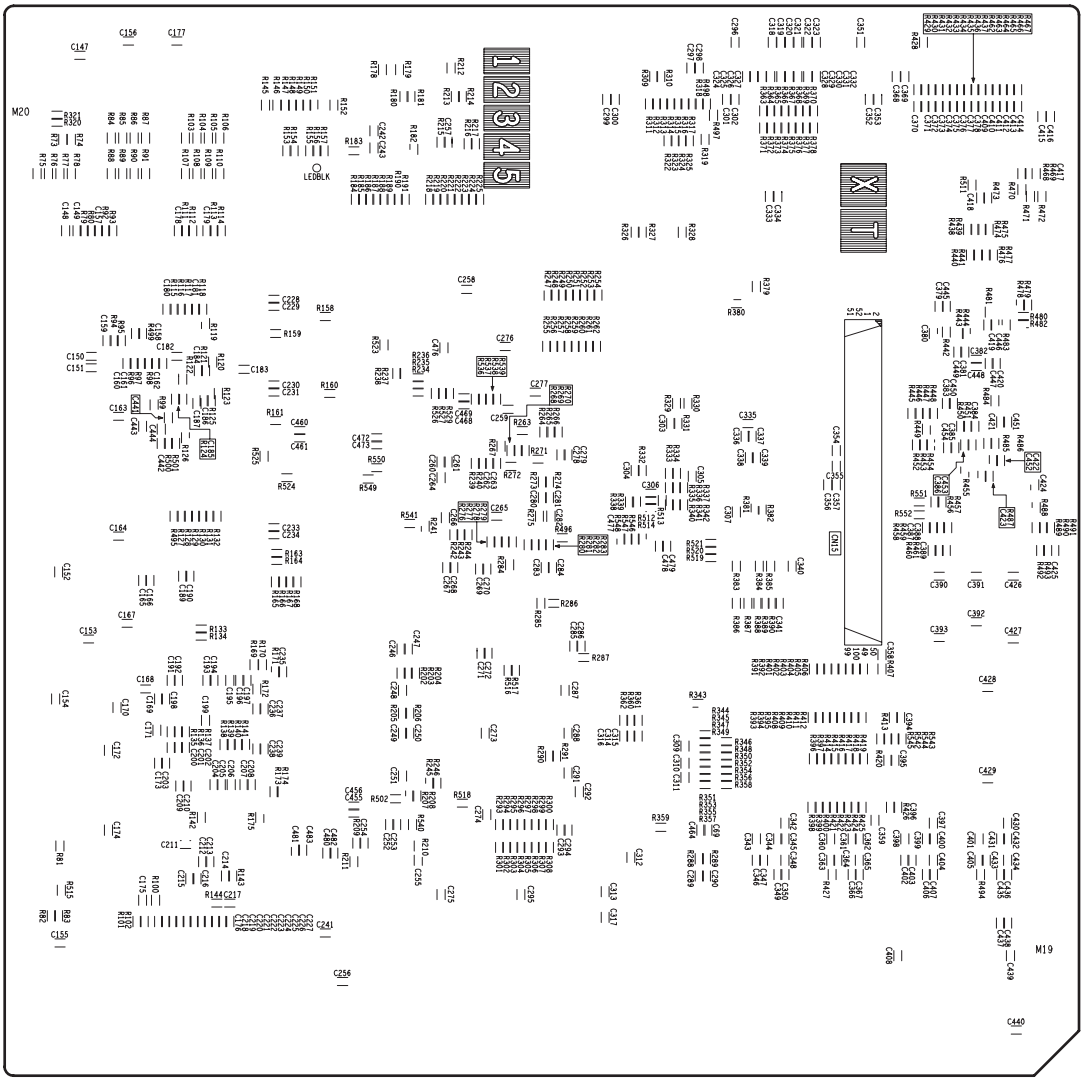

ITEM NO.	PARTS NO.	PARTS NAME	Q'TY / PAGE	Q'TY / PACK	P	I	R	BSI NO.	TO	T	FROM	SERIAL NO.	REMARKS	C
0	41300008000	MEM-F-NAD-AT	1	1/SB					0A					
0A	41300008000	MEM-F-NAD-AT	1	1/SB	-	-	-	G01C317	0A-1		0		DP1600	
0A-1	41300008000	MEM-F-NAD-AT	1	1/SB	-	-	-	G01J708			0A		DP1600 NAD, MJD, AUD, ASD, SAD, CND	
0B	41308008000	MEM-F-NAD-DM20	1	1/SB	A	-	J	G01C317					DP2000	
0C	41308001000	MEM-F-NAD-AW	1	1/SB	A	-	J	G01C317					DP2500 NAD, MJD, AUD, ASD, SAD, CND	
0D	41300035000	MEM-F-TWD-AT	1	1/SB	F	-	J	G01J708					DP1600 TWD	
0E	41308023000	MEM-F-TWD-AW	1	1/SB	F	-	J	G01J708					DP2500 TWD	
11	4849300025	IC-NJM4558M(T1) IC1	1	1/S										
12	3036030620	IC-TC7S04F IC2	1	5/S										
13	4843117500	IC-TW6407-T1 IC3	1	1/S										
14	3040470161	IC-TC4053BF IC4	1	5/S										
15	3040470124	IC-TC4051BF(ELN IC5	1	5/S										
16	4849300087	IC-EC-A957 IC6	1	1/S										
17	4849300087	IC-EC-A957 IC7	1	1/S										
18	4849300136	IC-SN74HCT244NS IC8	1	5/S										
20	4843116409	IC-SN74LS06NSE2 IC10	1	5/S										
21	4843116409	IC-SN74LS06NSE2 IC11	1	5/S										
22	4843117459	IC-UPC393G2-T1 IC12	1	5/S										
23	4843117476	IC-HM5264805FA6 IC13	1	1/S					23A					
24	3036030631	IC-TC7S08FTE85R IC14	1	5/S										
26	3040485666	IC-TC74VHC245FE IC16	1	5/S										
27	4843114470	IC-M62352GP IC17	1	5/S										
28	3040489275	IC-TC74ACT244FT IC18	1	5/S										
29	4843117476	IC-HM5264805FA6 IC19	1	1/S					29A					
30	3040489632	IC-TC74VHC244F IC20	1	5/S										
31	3040488061	IC-TC74HC541ATP IC21	1	5/S										
32	4849300108	IC-XC6361A332SR IC22	1	5/S					32A					
33	3040451907	IC-TC35095AFTP1 IC23	1	5/S										
36	3040487032	IC-TC74LCX14FEL IC26	1	5/S										
37	4849300033	IC-74FCT163245P IC27	1	5/S										
38	4849300130	IC-SN74LV245APW IC28	1	5/S										
39B	4843116409	IC-SN74LS06NSE2 IC29	1	5/S	A	-	J	G01C317					DP2000/2500	
40	3036030641	IC-TC7S32FTE85R IC30	1	5/S					40A					
40A	3036030641	IC-TC7S32FTE85R IC30	1	5/S	-	-	-	G01C317			40		DP1600	
41B	3040488182	IC-TC74HC273ATP IC31	1	5/S	A	-	J	G01C317					DP2000/2500	
42	4843117509	IC-HM5264165FA6 IC32	1	1/S										
43	3036031224	IC-TC7SZ04FTE85 IC33	1	5/S										
44	4849300089	IC-EC-N023	1	1/S										

ITEM NO.	PARTS NO.	PARTS NAME	Q'TY / PAGE	Q'TY / PACK	P	I	R	BSI NO.	TO	T	FROM	SERIAL NO.	REMARKS	C
		IC34												
45	3036031218	IC-TC7SZ08FTE85	1	5/S										
		IC35												
46	4849300090	IC-EC-N024	1	1/S										
		IC36												
47	3040488182	IC-TC74HC273ATP	1	5/S										
		IC37												
48	3040487413	IC-TC74LCX32FEL	1	5/S										
		IC38												
49	3040488480	IC-TC74HC08AFEL	1	5/S										
		IC39												
50	4849300028	IC-MC74HC125AFR	1	5/S										
		IC40												
51	3036030631	IC-TC7S08FTE85R	1	5/S										
		IC41												
52	4843117467	IC-PST593CMT	1	5/S										
		IC42												
53	3036030620	IC-TC7S04F	1	5/S										
		IC43												
54	3040485091	IC-TC74LVXC3245	1	5/S										
		IC44												
55	3040485091	IC-TC74LVXC3245	1	5/S										
		IC45												
58	3040486831	IC-TC74LCX02F(E	1	5/S										
		IC48												
59	4849300129	IC-EC-N027	1	1/S					59-1					
		IC49												
59-1	4849300158	IC-EC-N034	1	1/S	C	B	D	G01B282			59			
		IC49												
60	4843117547	IC-MBM29LV4BC-9	1	1/S										
		IC50												
61	4843117458	IC-MBM29LV16B90	1	1/S										
		IC51												
63	4843117458	IC-MBM29LV16B90	1	1/S										
		IC53												
66	3036031222	IC-TC7SZ32FTE85	1	5/S										
		IC56												
67	3040485827	IC-TCVHCT244FT2	1	5/S										
		IC57												
68	4843117571	IC-W24258S-70LE	1	1/S										
		IC58												
69	3040485648	IC-TC74HC32AFTP	1	5/S										
		IC59												
70	3036030620	IC-TC7S04F	1	5/S										
		IC60												
71	4843117467	IC-PST593CMT	1	5/S										
		IC61												
72	3036030631	IC-TC7S08FTE85R	1	5/S										
		IC62												
73	3036030620	IC-TC7S04F	1	5/S										
		IC63												
75	3040487399	IC-TC74LCX04F(E	1	5/S					75A					
		IC65												
76	4843117457	IC-MC68SEC00016	1	1/S										
		IC66												
77	4843117499	IC-PM-22	1	1/S										
		IC67												
78	4849300037	IC-D9011XI	1	1/S										
		IC68												
79	3040485827	IC-TCVHCT244FT2	1	5/S										
		IC69												
80	3036030620	IC-TC7S04F	1	5/S										
		IC70												
81	3036030620	IC-TC7S04F	1	5/S										
		IC71												
82	3036031222	IC-TC7SZ32FTE85	1	5/S										
		IC72												
83	3040485827	IC-TCVHCT244FT2	1	5/S										
		IC73												

ITEM NO.	PARTS NO.	PARTS NAME	Q'TY / PAGE	Q'TY / PACK	P	I	R	BSI NO.	TO	T	FROM	SERIAL NO.	REMARKS	C
84	4843117571	IC-W24258S-70LE IC74	1	1/S										
85	3040490332	IC-TC8521AM(EL) IC75	1	1/S										
86	4843117465	IC-IS61LV25612J IC76	1	5/S										
87	4843117465	IC-IS61LV25612J IC77	1	5/S										
88	3040487032	IC-TC74LCX14FEL IC78	1	5/S										
89	4849300034	IC-SN74F38NSR IC79	1	5/S										
90	4843112690	IC-M51957BFP IC80	1	5/S										
91	4849300128	IC-SN74LVC74ANS IC81	1	5/S										
92	3040469017	IC-TC74LCX245FL IC82	1	1/S										
93	4849300128	IC-SN74LVC74ANS IC83	1	5/S										
94	4849300128	IC-SN74LVC74ANS IC84	1	5/S										
95	4849300130	IC-SN74LV245APW IC85	1	5/S										
96	4849300130	IC-SN74LV245APW IC86	1	5/S										
97	4849300130	IC-SN74LV245APW IC87	1	5/S										
98	4849300128	IC-SN74LVC74ANS IC88	1	5/S										
99	3036030600	IC-TC7S00F IC89	1	5/S										
100	3036030620	IC-TC7S04F IC90	1	5/S										
101	3036030641	IC-TC7S32FTE85R IC91	1	5/S										
102	3040487413	IC-TC74LCX32FEL IC92	1	5/S										
103	3040488592	IC-TC74LCX157FL IC93	1	5/S										
104	3040469011	IC-TC74LCX374FL IC94	1	5/S										
131	4843101727	Q-DTA114GKAT146 Q1	1	1/P										
132	3036543615	Q-2SA1213Y(TE12 Q2	1	5/P					132A					
133	4843101717	Q-DTC114EKAT146 Q3	1	1/P										
134	4843101717	Q-DTC114EKAT146 Q4	1	1/P										
151	4843412073	CE-67C1C100M C1	1	5/P										
152	4843412073	CE-67C1C100M C2	1	5/P										
153	4843412073	CE-67C1C100M C3	1	5/P					153A					
154	4843412073	CE-67C1C100M C4	1	5/P										
155	4843412073	CE-67C1C100M C5	1	5/P										
156	4843412073	CE-67C1C100M C6	1	5/P					156A					
157	4843412073	CE-67C1C100M C7	1	5/P										
158	4843412074	CE-67C1C470M C8	1	5/P										
159	4843412074	CE-67C1C470M C9	1	5/P										
160	4843412073	CE-67C1C100M C10	1	5/P										

ITEM NO.	PARTS NO.	PARTS NAME	Q'TY / PAGE	Q'TY / PACK	P	I	R	BSI NO.	TO	T	FROM	SERIAL NO.	REMARKS	C
161	4843412073	CE-67C1C100M C11	1	5/P										
162	4843412073	CE-67C1C100M C12	1	5/P										
163	4843412073	CE-67C1C100M C13	1	5/P										
164	4843412073	CE-67C1C100M C14	1	5/P										
165	4843412073	CE-67C1C100M C15	1	5/P										
166	4843412073	CE-67C1C100M C16	1	5/P										
167	4843412073	CE-67C1C100M C17	1	5/P					167A					
168	4843412074	CE-67C1C470M C18	1	5/P										
169	4843412073	CE-67C1C100M C19	1	5/P					169A					
170	4843412073	CE-67C1C100M C20	1	5/P										
171	4843412073	CE-67C1C100M C21	1	5/P										
172	4843412073	CE-67C1C100M C22	1	5/P										
173	4843412073	CE-67C1C100M C23	1	5/P										
174	4843412073	CE-67C1C100M C24	1	5/P					174A					
175	4843412073	CE-67C1C100M C25	1	5/P					175A					
176	4843412073	CE-67C1C100M C26	1	5/P										
177	4843414041	CTP-EHHG1C226MT C27	1	10/P										
178	4843412073	CE-67C1C100M C28	1	5/P										
179	4843413167	CTP-MOF1E104ZT C29	1	10/P										
180	4843413167	CTP-MOF1E104ZT C30	1	10/P										
181	4843413167	CTP-MOF1E104ZT C31	1	10/P										
182	4843413167	CTP-MOF1E104ZT C32	1	10/P										
183	4843413167	CTP-MOF1E104ZT C33	1	10/P										
184	4843413167	CTP-MOF1E104ZT C34	1	10/P										
185	4843413321	CTP-CZCH1H221JT C35	1	10/P										
186	4843413167	CTP-MOF1E104ZT C36	1	10/P										
187	4843413199	CTP-MOCH1H100DT C37	1	10/P										
188	4843413199	CTP-MOCH1H100DT C38	1	10/P										
189	4843413199	CTP-MOCH1H100DT C39	1	10/P										
190	4843413199	CTP-MOCH1H100DT C40	1	10/P										
191	4843413199	CTP-MOCH1H100DT C41	1	10/P										
192	4843413199	CTP-MOCH1H100DT C42	1	10/P										
193	4843413313	CTP-CZCH1H470JT C43	1	10/P										
194	4843413167	CTP-MOF1E104ZT C44	1	10/P										
195	4843413167	CTP-MOF1E104ZT C45	1	10/P										

ITEM NO.	PARTS NO.	PARTS NAME	Q'TY / PAGE	Q'TY / PACK	P	I	R	BSI NO.	TO	T	FROM	SERIAL NO.	REMARKS	C
196	4843413167	CTP-MOF1E104ZT C46	1	10/P										
197	4843413321	CTP-CZCH1H221JT C47	1	10/P					197A					
198	4843413167	CTP-MOF1E104ZT C48	1	10/P					198A					
199	4843413199	CTP-MOCH1H100DT C49	1	10/P										
200	4843413199	CTP-MOCH1H100DT C50	1	10/P										
201	4843413199	CTP-MOCH1H100DT C51	1	10/P										
202	4843413199	CTP-MOCH1H100DT C52	1	10/P										
203	4843413199	CTP-MOCH1H100DT C53	1	10/P										
204	4843413199	CTP-MOCH1H100DT C54	1	10/P										
205	4843413167	CTP-MOF1E104ZT C55	1	10/P										
206	4843413167	CTP-MOF1E104ZT C56	1	10/P										
207	4843413321	CTP-CZCH1H221JT C57	1	10/P					207A					
208	4843413167	CTP-MOF1E104ZT C58	1	10/P					208A					
209	4843413167	CTP-MOF1E104ZT C59	1	10/P										
210	4843413167	CTP-MOF1E104ZT C60	1	10/P										
211	4843413167	CTP-MOF1E104ZT C61	1	10/P										
213	4843413167	CTP-MOF1E104ZT C63	1	10/P										
214	4843413317	CTP-CZCH1H101JT C64	1	10/P										
215	4843413167	CTP-MOF1E104ZT C65	1	10/P										
216	4843413167	CTP-MOF1E104ZT C66	1	10/P										
217	4843413167	CTP-MOF1E104ZT C67	1	10/P										
219	4843413167	CTP-MOF1E104ZT C69	1	10/P										
220	4843413167	CTP-MOF1E104ZT C70	1	10/P										
221	4843413167	CTP-MOF1E104ZT C71	1	10/P										
222	4843413167	CTP-MOF1E104ZT C72	1	10/P										
223B	4843413167	CTP-MOF1E104ZT C73	1	10/P	A	-	J	G01C317					DP2000/2500	
224	4843413313	CTP-CZCH1H470JT C74	1	10/P										
225	4843413321	CTP-CZCH1H221JT C75	1	10/P										
226	4843413167	CTP-MOF1E104ZT C76	1	10/P										
227	4843413321	CTP-CZCH1H221JT C77	1	10/P										
228	4843413167	CTP-MOF1E104ZT C78	1	10/P										
229	4843413167	CTP-MOF1E104ZT C79	1	10/P										
230	4843413321	CTP-CZCH1H221JT C80	1	10/P										
231	4843413167	CTP-MOF1E104ZT C81	1	10/P										
232	4843413167	CTP-MOF1E104ZT C82	1	10/P										

ITEM NO.	PARTS NO.	PARTS NAME	Q'TY / PAGE	Q'TY / PACK	P	I	R	BSI NO.	TO	T	FROM	SERIAL NO.	REMARKS	C
233	4843413167	CTP-MOF1E104ZT C83	1	10/P										
234	4843413167	CTP-MOF1E104ZT C84	1	10/P										
235	4843413167	CTP-MOF1E104ZT C85	1	10/P										
236	4843413167	CTP-MOF1E104ZT C86	1	10/P										
237	4843413167	CTP-MOF1E104ZT C87	1	10/P										
238	4843413167	CTP-MOF1E104ZT C88	1	10/P										
239	4843413321	CTP-CZCH1H221JT C89	1	10/P										
240	4843413167	CTP-MOF1E104ZT C90	1	10/P										
241	4843413167	CTP-MOF1E104ZT C91	1	10/P										
242	4843413321	CTP-CZCH1H221JT C92	1	10/P										
243	4843413167	CTP-MOF1E104ZT C93	1	10/P										
244	4843413167	CTP-MOF1E104ZT C94	1	10/P										
245	4843413199	CTP-MOCH1H100DT C95	1	10/P										
246	4843413199	CTP-MOCH1H100DT C96	1	10/P										
247	4843413199	CTP-MOCH1H100DT C97	1	10/P										
248	4843413199	CTP-MOCH1H100DT C98	1	10/P										
249	4843413167	CTP-MOF1E104ZT C99	1	10/P										
250	4843413167	CTP-MOF1E104ZT C100	1	10/P										
251	4843413167	CTP-MOF1E104ZT C101	1	10/P										
252	4843413167	CTP-MOF1E104ZT C102	1	10/P										
253	4843413321	CTP-CZCH1H221JT C103	1	10/P										
254	4843413167	CTP-MOF1E104ZT C104	1	10/P										
255	4843413167	CTP-MOF1E104ZT C105	1	10/P										
256	4843413321	CTP-CZCH1H221JT C106	1	10/P										
257	4843413167	CTP-MOF1E104ZT C107	1	10/P										
258	4843413199	CTP-MOCH1H100DT C108	1	10/P										
259	4843413199	CTP-MOCH1H100DT C109	1	10/P										
260	4843413199	CTP-MOCH1H100DT C110	1	10/P										
261	4843413199	CTP-MOCH1H100DT C111	1	10/P										
262	4843413167	CTP-MOF1E104ZT C112	1	10/P										
263	4843413167	CTP-MOF1E104ZT C113	1	10/P										
264	4843413167	CTP-MOF1E104ZT C114	1	10/P										
265	4843413317	CTP-CZCH1H101JT C115	1	10/P										
268	4843413167	CTP-MOF1E104ZT C118	1	10/P										
269	4843413167	CTP-MOF1E104ZT C119	1	10/P										

ITEM NO.	PARTS NO.	PARTS NAME	Q'TY / PAGE	Q'TY / PACK	P	I	R	BSI NO.	TO	T	FROM	SERIAL NO.	REMARKS	C
270	4843413167	CTP-MOF1E104ZT C120	1	10/P										
271	4843413321	CTP-CZCH1H221JT C121	1	10/P										
272	4843413167	CTP-MOF1E104ZT C122	1	10/P										
273	4843413167	CTP-MOF1E104ZT C123	1	10/P										
274	4843413167	CTP-MOF1E104ZT C124	1	10/P										
275	4843413167	CTP-MOF1E104ZT C125	1	10/P										
276	4843413167	CTP-MOF1E104ZT C126	1	10/P										
277	4843413167	CTP-MOF1E104ZT C127	1	10/P					277A					
278	4843413167	CTP-MOF1E104ZT C128	1	10/P										
279	4843412009	CTP-MOB1H103KT C129	1	10/P										
280	4843413167	CTP-MOF1E104ZT C130	1	10/P										
281	4843413167	CTP-MOF1E104ZT C131	1	10/P										
282	4843413167	CTP-MOF1E104ZT C132	1	10/P										
283	4843413167	CTP-MOF1E104ZT C133	1	10/P										
284	4843413321	CTP-CZCH1H221JT C134	1	10/P										
285	4843413167	CTP-MOF1E104ZT C135	1	10/P										
286	4843413167	CTP-MOF1E104ZT C136	1	10/P										
287	4843413167	CTP-MOF1E104ZT C137	1	10/P										
288	4843413167	CTP-MOF1E104ZT C138	1	10/P										
289	4843413167	CTP-MOF1E104ZT C139	1	10/P										
290	4843413167	CTP-MOF1E104ZT C140	1	10/P										
291	4843413167	CTP-MOF1E104ZT C141	1	10/P										
292	4843413167	CTP-MOF1E104ZT C142	1	10/P										
293	4843413167	CTP-MOF1E104ZT C143	1	10/P										
294	4843413321	CTP-CZCH1H221JT C144	1	10/P										
295	4843413167	CTP-MOF1E104ZT C145	1	10/P										
296	4843413321	CTP-CZCH1H221JT C146	1	10/P										
297	4843413167	CTP-MOF1E104ZT C147	1	10/P										
298	4843413313	CTP-CZCH1H470JT C148	1	10/P										
299	4843413313	CTP-CZCH1H470JT C149	1	10/P										
300	4843413306	CTP-CZCH1H120JT C150	1	10/P										
301	4843413313	CTP-CZCH1H470JT C151	1	10/P										
302	4843413167	CTP-MOF1E104ZT C152	1	10/P										
303	4843413167	CTP-MOF1E104ZT C153	1	10/P										
304	4843413167	CTP-MOF1E104ZT C154	1	10/P										

ITEM NO.	PARTS NO.	PARTS NAME	Q'TY / PAGE	Q'TY / PACK	P	I	R	BSI NO.	TO	T	FROM	SERIAL NO.	REMARKS	C
305	4843413167	CTP-MOF1E104ZT C155	1	10/P										
306	4843413167	CTP-MOF1E104ZT C156	1	10/P										
307	4843413313	CTP-CZCH1H470JT C157	1	10/P										
308	4843413317	CTP-CZCH1H101JT C158	1	10/P										
309	4843413313	CTP-CZCH1H470JT C159	1	10/P										
310	4843413167	CTP-MOF1E104ZT C160	1	10/P										
311	4843411993	CTP-MOB1H471KT C161	1	10/P										
312	4843411993	CTP-MOB1H471KT C162	1	10/P										
313	4843413167	CTP-MOF1E104ZT C163	1	10/P										
314	4843413167	CTP-MOF1E104ZT C164	1	10/P										
315	4843413321	CTP-CZCH1H221JT C165	1	10/P										
316	4843413167	CTP-MOF1E104ZT C166	1	10/P										
317	4843413167	CTP-MOF1E104ZT C167	1	10/P										
318	4843413167	CTP-MOF1E104ZT C168	1	10/P										
319	4843413317	CTP-CZCH1H101JT C169	1	10/P										
320	4843413167	CTP-MOF1E104ZT C170	1	10/P										
321	4843413167	CTP-MOF1E104ZT C171	1	10/P										
322	4843413167	CTP-MOF1E104ZT C172	1	10/P										
323	4843413317	CTP-CZCH1H101JT C173	1	10/P										
324	4843413167	CTP-MOF1E104ZT C174	1	10/P										
325	4843413167	CTP-MOF1E104ZT C175	1	10/P										
326	4843413199	CTP-MOCH1H100DT C176	1	10/P										
327	4843413167	CTP-MOF1E104ZT C177	1	10/P										
328	4843413313	CTP-CZCH1H470JT C178	1	10/P										
329	4843413313	CTP-CZCH1H470JT C179	1	10/P										
330	4843412001	CTP-MOB1H222KT C180	1	10/P										
331	4843413313	CTP-CZCH1H470JT C181	1	10/P										
332	4843413167	CTP-MOF1E104ZT C182	1	10/P										
333	4843413167	CTP-MOF1E104ZT C183	1	10/P										
334	4843413317	CTP-CZCH1H101JT C184	1	10/P										
335	4843413317	CTP-CZCH1H101JT C185	1	10/P										
336	4843411993	CTP-MOB1H471KT C186	1	10/P										
337	4843413167	CTP-MOF1E104ZT C187	1	10/P										
339	4843413167	CTP-MOF1E104ZT C189	1	10/P										
340	4843413321	CTP-CZCH1H221JT C190	1	10/P										

ITEM NO.	PARTS NO.	PARTS NAME	Q'TY / PAGE	Q'TY / PACK	P	I	R	BSI NO.	TO	T	FROM	SERIAL NO.	REMARKS	C
341	4843413167	CTP-MOF1E104ZT C191	1	10/P										
342	4843413317	CTP-CZCH1H101JT C192	1	10/P										
343	4843413167	CTP-MOF1E104ZT C193	1	10/P										
344	4843413317	CTP-CZCH1H101JT C194	1	10/P										
345	4843413167	CTP-MOF1E104ZT C195	1	10/P										
346	4843413167	CTP-MOF1E104ZT C196	1	10/P										
347	4843413167	CTP-MOF1E104ZT C197	1	10/P										
348	4843413167	CTP-MOF1E104ZT C198	1	10/P										
349	4843413167	CTP-MOF1E104ZT C199	1	10/P										
350	4843413199	CTP-MOCH1H100DT C200	1	10/P										
351	4843413199	CTP-MOCH1H100DT C201	1	10/P										
352	4843413199	CTP-MOCH1H100DT C202	1	10/P										
353	4843413167	CTP-MOF1E104ZT C203	1	10/P										
354	4843413167	CTP-MOF1E104ZT C204	1	10/P										
355	4843413317	CTP-CZCH1H101JT C205	1	10/P										
356	4843413167	CTP-MOF1E104ZT C206	1	10/P										
357	4843413167	CTP-MOF1E104ZT C207	1	10/P										
358	4843413317	CTP-CZCH1H101JT C208	1	10/P										
359	4843413167	CTP-MOF1E104ZT C209	1	10/P										
360	4843413317	CTP-CZCH1H101JT C210	1	10/P										
361	4843413167	CTP-MOF1E104ZT C211	1	10/P										
362	4843413321	CTP-CZCH1H221JT C212	1	10/P										
363	4843413167	CTP-MOF1E104ZT C213	1	10/P										
364	4843413313	CTP-CZCH1H470JT C214	1	10/P										
365	4843413167	CTP-MOF1E104ZT C215	1	10/P										
366	4843413321	CTP-CZCH1H221JT C216	1	10/P										
367	4843413199	CTP-MOCH1H100DT C217	1	10/P										
368	4843413199	CTP-MOCH1H100DT C218	1	10/P										
369	4843413199	CTP-MOCH1H100DT C219	1	10/P										
370	4843413199	CTP-MOCH1H100DT C220	1	10/P										
371	4843413199	CTP-MOCH1H100DT C221	1	10/P										
372	4843413199	CTP-MOCH1H100DT C222	1	10/P										
373	4843413199	CTP-MOCH1H100DT C223	1	10/P										
374	4843413199	CTP-MOCH1H100DT C224	1	10/P										
375	4843413199	CTP-MOCH1H100DT C225	1	10/P										

ITEM NO.	PARTS NO.	PARTS NAME	Q'TY / PAGE	Q'TY / PACK	P	I	R	BSI NO.	TO	T	FROM	SERIAL NO.	REMARKS	C
376	4843413199	CTP-MOCH1H100DT C226	1	10/P										
377	4843413199	CTP-MOCH1H100DT C227	1	10/P										
378	4843413167	CTP-MOF1E104ZT C228	1	10/P										
379	4843413321	CTP-CZCH1H221JT C229	1	10/P										
380	4843413167	CTP-MOF1E104ZT C230	1	10/P										
381	4843413321	CTP-CZCH1H221JT C231	1	10/P										
383	4843413167	CTP-MOF1E104ZT C233	1	10/P										
384	4843413321	CTP-CZCH1H221JT C234	1	10/P										
385	4843413167	CTP-MOF1E104ZT C235	1	10/P										
386	4843413167	CTP-MOF1E104ZT C236	1	10/P										
387	4843413321	CTP-CZCH1H221JT C237	1	10/P										
388	4843413167	CTP-MOF1E104ZT C238	1	10/P										
389	4843413317	CTP-CZCH1H101JT C239	1	10/P										
391	4843413167	CTP-MOF1E104ZT C241	1	10/P										
392	4843414054	CTP-COCH1H300JT C242	1	10/P										
393	4843414054	CTP-COCH1H300JT C243	1	10/P										
396	4843413321	CTP-CZCH1H221JT C246	1	10/P										
397	4843413167	CTP-MOF1E104ZT C247	1	10/P										
398	4843413167	CTP-MOF1E104ZT C248	1	10/P										
399	4843413317	CTP-CZCH1H101JT C249	1	10/P										
400	4843413167	CTP-MOF1E104ZT C250	1	10/P										
401	4843413167	CTP-MOF1E104ZT C251	1	10/P										
402	4843413167	CTP-MOF1E104ZT C252	1	10/P										
403	4843413317	CTP-CZCH1H101JT C253	1	10/P										
404	4843413313	CTP-CZCH1H470JT C254	1	10/P										
405	4843413199	CTP-MOCH1H100DT C255	1	10/P										
406	4843413167	CTP-MOF1E104ZT C256	1	10/P										
407	4843411997	CTP-MOB1H102KT C257	1	10/P										
408	4843413167	CTP-MOF1E104ZT C258	1	10/P										
409	4843413167	CTP-MOF1E104ZT C259	1	10/P										
410	4843413317	CTP-CZCH1H101JT C260	1	10/P										
411	4843413167	CTP-MOF1E104ZT C261	1	10/P										
412	4843413167	CTP-MOF1E104ZT C262	1	10/P										
413	4843413321	CTP-CZCH1H221JT C263	1	10/P										
414	4843413167	CTP-MOF1E104ZT C264	1	10/P										

ITEM NO.	PARTS NO.	PARTS NAME	Q'TY / PAGE	Q'TY / PACK	P	I	R	BSI NO.	TO	T	FROM	SERIAL NO.	REMARKS	C
415	4843413167	CTP-MOF1E104ZT C265	1	10/P										
416	4843413167	CTP-MOF1E104ZT C266	1	10/P										
417	4843413317	CTP-CZCH1H101JT C267	1	10/P										
418	4843413167	CTP-MOF1E104ZT C268	1	10/P										
419	4843413167	CTP-MOF1E104ZT C269	1	10/P										
420	4843413317	CTP-CZCH1H101JT C270	1	10/P										
421	4843413167	CTP-MOF1E104ZT C271	1	10/P										
422	4843413167	CTP-MOF1E104ZT C272	1	10/P										
423	4843413167	CTP-MOF1E104ZT C273	1	10/P										
424	4843413167	CTP-MOF1E104ZT C274	1	10/P										
425	4843413167	CTP-MOF1E104ZT C275	1	10/P										
426	4843413167	CTP-MOF1E104ZT C276	1	10/P										
427	4843413167	CTP-MOF1E104ZT C277	1	10/P										
428	4843413167	CTP-MOF1E104ZT C278	1	10/P										
429	4843413167	CTP-MOF1E104ZT C279	1	10/P										
430	4843413199	CTP-MOCH1H100DT C280	1	10/P										
431	4843413199	CTP-MOCH1H100DT C281	1	10/P										
432	4843413167	CTP-MOF1E104ZT C282	1	10/P										
433	4843413167	CTP-MOF1E104ZT C283	1	10/P										
434	4843413317	CTP-CZCH1H101JT C284	1	10/P										
435	4843413317	CTP-CZCH1H101JT C285	1	10/P										
436	4843413167	CTP-MOF1E104ZT C286	1	10/P										
437	4843413167	CTP-MOF1E104ZT C287	1	10/P										
438	4843413167	CTP-MOF1E104ZT C288	1	10/P										
439	4843413199	CTP-MOCH1H100DT C289	1	10/P										
440	4843413199	CTP-MOCH1H100DT C290	1	10/P										
441	4843413167	CTP-MOF1E104ZT C291	1	10/P										
442	4843413167	CTP-MOF1E104ZT C292	1	10/P										
443	4843413167	CTP-MOF1E104ZT C293	1	10/P										
444	4843413317	CTP-CZCH1H101JT C294	1	10/P										
445	4843413167	CTP-MOF1E104ZT C295	1	10/P										
446	4843413167	CTP-MOF1E104ZT C296	1	10/P										
447	4843413167	CTP-MOF1E104ZT C297	1	10/P										
448	4843413321	CTP-CZCH1H221JT C298	1	10/P										
449	4843413167	CTP-MOF1E104ZT C299	1	10/P										

ITEM NO.	PARTS NO.	PARTS NAME	Q'TY / PAGE	Q'TY / PACK	P	I	R	BSI NO.	TO	T	FROM	SERIAL NO.	REMARKS	C
450	4843413321	CTP-CZCH1H221JT C300	1	10/P										
451	4843413321	CTP-CZCH1H221JT C301	1	10/P										
452	4843413167	CTP-MOF1E104ZT C302	1	10/P										
453	4843412001	CTP-MOB1H222KT C303	1	10/P					453A					
454	4843413167	CTP-MOF1E104ZT C304	1	10/P										
455	4843413167	CTP-MOF1E104ZT C305	1	10/P										
456	4843413167	CTP-MOF1E104ZT C306	1	10/P										
457	4843413167	CTP-MOF1E104ZT C307	1	10/P										
459	4843413167	CTP-MOF1E104ZT C309	1	10/P										
460	4843413167	CTP-MOF1E104ZT C310	1	10/P										
461	4843413167	CTP-MOF1E104ZT C311	1	10/P										
462	4843413167	CTP-MOF1E104ZT C312	1	10/P										
463	4843413167	CTP-MOF1E104ZT C313	1	10/P										
464	4843413199	CTP-MOCH1H100DT C314	1	10/P										
465	4843413199	CTP-MOCH1H100DT C315	1	10/P										
466	4843413199	CTP-MOCH1H100DT C316	1	10/P										
467	4843413167	CTP-MOF1E104ZT C317	1	10/P										
468	4843413199	CTP-MOCH1H100DT C318	1	10/P										
469	4843413199	CTP-MOCH1H100DT C319	1	10/P										
470	4843413199	CTP-MOCH1H100DT C320	1	10/P										
471	4843413199	CTP-MOCH1H100DT C321	1	10/P										
472	4843413199	CTP-MOCH1H100DT C322	1	10/P										
473	4843413199	CTP-MOCH1H100DT C323	1	10/P										
474	4843413199	CTP-MOCH1H100DT C324	1	10/P										
475	4843413199	CTP-MOCH1H100DT C325	1	10/P										
476	4843413199	CTP-MOCH1H100DT C326	1	10/P										
477	4843413199	CTP-MOCH1H100DT C327	1	10/P										
478	4843413199	CTP-MOCH1H100DT C328	1	10/P										
479	4843413199	CTP-MOCH1H100DT C329	1	10/P										
480	4843413199	CTP-MOCH1H100DT C330	1	10/P										
481	4843413199	CTP-MOCH1H100DT C331	1	10/P										
482	4843413199	CTP-MOCH1H100DT C332	1	10/P										
483	4843413321	CTP-CZCH1H221JT C333	1	10/P										
484	4843413167	CTP-MOF1E104ZT C334	1	10/P										
485	4843413167	CTP-MOF1E104ZT C335	1	10/P										

ITEM NO.	PARTS NO.	PARTS NAME	Q'TY / PAGE	Q'TY / PACK	P	I	R	BSI NO.	TO	T	FROM	SERIAL NO.	REMARKS	C
486	4843413321	CTP-CZCH1H221JT C336	1	10/P										
487	4843413167	CTP-MOF1E104ZT C337	1	10/P										
488	4843413321	CTP-CZCH1H221JT C338	1	10/P										
489	4843413167	CTP-MOF1E104ZT C339	1	10/P										
490	4843413167	CTP-MOF1E104ZT C340	1	10/P										
491	4843413317	CTP-CZCH1H101JT C341	1	10/P										
492	4843413167	CTP-MOF1E104ZT C342	1	10/P					492A					
493	4843413167	CTP-MOF1E104ZT C343	1	10/P					493A					
494	4843413167	CTP-MOF1E104ZT C344	1	10/P					494A					
495	4843413321	CTP-CZCH1H221JT C345	1	10/P					495A					
496	4843413167	CTP-MOF1E104ZT C346	1	10/P					496A					
497	4843413167	CTP-MOF1E104ZT C347	1	10/P					497A					
498	4843413167	CTP-MOF1E104ZT C348	1	10/P					498A					
499	4843413167	CTP-MOF1E104ZT C349	1	10/P					499A					
500	4843413321	CTP-CZCH1H221JT C350	1	10/P					500A					
501	4843413167	CTP-MOF1E104ZT C351	1	10/P										
502	4843413321	CTP-CZCH1H221JT C352	1	10/P										
503	4843413167	CTP-MOF1E104ZT C353	1	10/P										
504	4843413167	CTP-MOF1E104ZT C354	1	10/P										
505	4843413167	CTP-MOF1E104ZT C355	1	10/P										
506	4843413321	CTP-CZCH1H221JT C356	1	10/P										
507	4843413167	CTP-MOF1E104ZT C357	1	10/P										
508	4843413199	CTP-MOCH1H100DT C358	1	10/P										
509	4843413167	CTP-MOF1E104ZT C359	1	10/P					509A					
510	4843413167	CTP-MOF1E104ZT C360	1	10/P					510A					
511	4843413167	CTP-MOF1E104ZT C361	1	10/P					511A					
512	4843413321	CTP-CZCH1H221JT C362	1	10/P					512A					
513	4843413167	CTP-MOF1E104ZT C363	1	10/P					513A					
514	4843413167	CTP-MOF1E104ZT C364	1	10/P					514A					
515	4843413167	CTP-MOF1E104ZT C365	1	10/P					515A					
516	4843413167	CTP-MOF1E104ZT C366	1	10/P					516A					
517	4843413321	CTP-CZCH1H221JT C367	1	10/P					517A					
518	4843413321	CTP-CZCH1H221JT C368	1	10/P										
519	4843413167	CTP-MOF1E104ZT C369	1	10/P										
520	4843413313	CTP-CZCH1H470JT C370	1	10/P										

ITEM NO.	PARTS NO.	PARTS NAME	Q'TY / PAGE	Q'TY / PACK	P	I	R	BSI NO.	TO	T	FROM	SERIAL NO.	REMARKS	C
521	4843413313	CTP-CZCH1H470JT C371	1	10/P										
522	4843413313	CTP-CZCH1H470JT C372	1	10/P										
523	4843413313	CTP-CZCH1H470JT C373	1	10/P										
524	4843413313	CTP-CZCH1H470JT C374	1	10/P										
525	4843413313	CTP-CZCH1H470JT C375	1	10/P										
527	4843413313	CTP-CZCH1H470JT C377	1	10/P										
528	4843413313	CTP-CZCH1H470JT C378	1	10/P										
529	4843413167	CTP-MOF1E104ZT C379	1	10/P										
530	4843413313	CTP-CZCH1H470JT C380	1	10/P										
531	4843413167	CTP-MOF1E104ZT C381	1	10/P										
532	4843413167	CTP-MOF1E104ZT C382	1	10/P										
533	4843413167	CTP-MOF1E104ZT C383	1	10/P										
534	4843413313	CTP-CZCH1H470JT C384	1	10/P										
535	4843413167	CTP-MOF1E104ZT C385	1	10/P										
536	4843413167	CTP-MOF1E104ZT C386	1	10/P										
537	4843413317	CTP-CZCH1H101JT C387	1	10/P										
538	4843413167	CTP-MOF1E104ZT C388	1	10/P										
539	4843413317	CTP-CZCH1H101JT C389	1	10/P										
540	4843413167	CTP-MOF1E104ZT C390	1	10/P										
541	4843413167	CTP-MOF1E104ZT C391	1	10/P										
542	4843413167	CTP-MOF1E104ZT C392	1	10/P										
543	4843413167	CTP-MOF1E104ZT C393	1	10/P										
544	4843413199	CTP-MOCH1H100DT C394	1	10/P										
545	4843413199	CTP-MOCH1H100DT C395	1	10/P										
546	4843413199	CTP-MOCH1H100DT C396	1	10/P										
547	4843413167	CTP-MOF1E104ZT C397	1	10/P										
548	4843413167	CTP-MOF1E104ZT C398	1	10/P										
549	4843413167	CTP-MOF1E104ZT C399	1	10/P										
550	4843413321	CTP-CZCH1H221JT C400	1	10/P										
551	4843413167	CTP-MOF1E104ZT C401	1	10/P										
552	4843413167	CTP-MOF1E104ZT C402	1	10/P										
553	4843413167	CTP-MOF1E104ZT C403	1	10/P										
554	4843413167	CTP-MOF1E104ZT C404	1	10/P										
555	4843413167	CTP-MOF1E104ZT C405	1	10/P										
556	4843413167	CTP-MOF1E104ZT C406	1	10/P										

ITEM NO.	PARTS NO.	PARTS NAME	Q'TY / PAGE	Q'TY / PACK	P	I	R	BSI NO.	TO	T	FROM	SERIAL NO.	REMARKS	C
557	4843413321	CTP-CZCH1H221JT C407	1	10/P										
558	4843413167	CTP-MOF1E104ZT C408	1	10/P										
559	4843413313	CTP-CZCH1H470JT C409	1	10/P										
560	4843413313	CTP-CZCH1H470JT C410	1	10/P										
561	4843413313	CTP-CZCH1H470JT C411	1	10/P										
562	4843413313	CTP-CZCH1H470JT C412	1	10/P										
563	4843413313	CTP-CZCH1H470JT C413	1	10/P										
564	4843413313	CTP-CZCH1H470JT C414	1	10/P										
565	4843413321	CTP-CZCH1H221JT C415	1	10/P										
566	4843413167	CTP-MOF1E104ZT C416	1	10/P										
567	4843413167	CTP-MOF1E104ZT C417	1	10/P										
568	4843413167	CTP-MOF1E104ZT C418	1	10/P										
569	4843413167	CTP-MOF1E104ZT C419	1	10/P										
570	4843413167	CTP-MOF1E104ZT C420	1	10/P										
571	4843413167	CTP-MOF1E104ZT C421	1	10/P										
572	4843413167	CTP-MOF1E104ZT C422	1	10/P										
573	4843413313	CTP-CZCH1H470JT C423	1	10/P										
574	4843413167	CTP-MOF1E104ZT C424	1	10/P										
575	4843411997	CTP-MOB1H102KT C425	1	10/P										
576	4843413167	CTP-MOF1E104ZT C426	1	10/P										
577	4843413167	CTP-MOF1E104ZT C427	1	10/P										
578	4843413167	CTP-MOF1E104ZT C428	1	10/P										
579	4843413167	CTP-MOF1E104ZT C429	1	10/P										
580	4843413167	CTP-MOF1E104ZT C430	1	10/P										
581	4843413167	CTP-MOF1E104ZT C431	1	10/P										
582	4843413321	CTP-CZCH1H221JT C432	1	10/P										
583	4843413167	CTP-MOF1E104ZT C433	1	10/P										
584	4843413167	CTP-MOF1E104ZT C434	1	10/P										
585	4843413167	CTP-MOF1E104ZT C435	1	10/P										
586	4843413321	CTP-CZCH1H221JT C436	1	10/P										
587	4843413167	CTP-MOF1E104ZT C437	1	10/P										
588	4843413321	CTP-CZCH1H221JT C438	1	10/P										
589	4843413167	CTP-MOF1E104ZT C439	1	10/P										
590	4843413167	CTP-MOF1E104ZT C440	1	10/P										
591	4843413317	CTP-CZCH1H101JT C441	1	10/P										

ITEM NO.	PARTS NO.	PARTS NAME	Q'TY / PAGE	Q'TY / PACK	P	I	R	BSI NO.	TO	T	FROM	SERIAL NO.	REMARKS	C
592	4843413167	CTP-MOF1E104ZT	1	10/P										
		C442												
593	4843414115	CTP-KOBJ1A224KT	1	10/P										
		C443												
594	4843413167	CTP-MOF1E104ZT	1	10/P										
		C444												
595	4843413321	CTP-CZCH1H221JT	1	10/P										
		C445												
596	4843413321	CTP-CZCH1H221JT	1	10/P										
		C446												
597	4843413321	CTP-CZCH1H221JT	1	10/P										
		C447												
598	4843413321	CTP-CZCH1H221JT	1	10/P										
		C448												
599	4843413321	CTP-CZCH1H221JT	1	10/P										
		C449												
600	4843413321	CTP-CZCH1H221JT	1	10/P										
		C450												
601	4843413321	CTP-CZCH1H221JT	1	10/P										
		C451												
602	4843413321	CTP-CZCH1H221JT	1	10/P										
		C452												
603	4843413321	CTP-CZCH1H221JT	1	10/P										
		C453												
604	4843413321	CTP-CZCH1H221JT	1	10/P										
		C454												
605	4843413167	CTP-MOF1E104ZT	1	10/P										
		C455												
606	4843413321	CTP-CZCH1H221JT	1	10/P										
		C456												
607	4843413167	CTP-MOF1E104ZT	1	10/P										
		C457												
610	4843413167	CTP-MOF1E104ZT	1	10/P										
		C460												
611	4843413321	CTP-CZCH1H221JT	1	10/P										
		C461												
612	4843413167	CTP-MOF1E104ZT	1	10/P										
		C462												
613	4843413321	CTP-CZCH1H221JT	1	10/P										
		C463												
614	4843413321	CTP-CZCH1H221JT	1	10/P										
		C464												
615	4843413321	CTP-CZCH1H221JT	1	10/P										
		C465												
616	4843413167	CTP-MOF1E104ZT	1	10/P										
		C466												
617	4843413321	CTP-CZCH1H221JT	1	10/P										
		C467												
618	4843413167	CTP-MOF1E104ZT	1	10/P										
		C468												
619	4843413321	CTP-CZCH1H221JT	1	10/P										
		C469												
620	4843413167	CTP-MOF1E104ZT	1	10/P										
		C470												
621	4843413321	CTP-CZCH1H221JT	1	10/P										
		C471												
622	4843413167	CTP-MOF1E104ZT	1	10/P										
		C472												
623	4843413321	CTP-CZCH1H221JT	1	10/P										
		C473												
624	4843413167	CTP-MOF1E104ZT	1	10/P										
		C474												
625	4843413167	CTP-MOF1E104ZT	1	10/P										
		C475												
626	4843413167	CTP-MOF1E104ZT	1	10/P										
		C476												
628	4843413167	CTP-MOF1E104ZT	1	10/P										
		C478												
629	4843413321	CTP-CZCH1H221JT	1	10/P										
		C479												

ITEM NO.	PARTS NO.	PARTS NAME	Q'TY / PAGE	Q'TY / PACK	P	I	R	BSI NO.	TO	T	FROM	SERIAL NO.	REMARKS	C
630	4843413167	CTP-MOF1E104ZT C480	1	10/P										
631	4843413167	CTP-MOF1E104ZT C481	1	10/P										
632	4843413321	CTP-CZCH1H221JT C482	1	10/P										
633	4843413321	CTP-CZCH1H221JT C483	1	10/P										
651	3037150952	D-1SS190(TE85L) D1	1	5/P										
652	3037153902	D-1SS294(TE85R) D2	1	5/P										
653	3037153902	D-1SS294(TE85R) D3	1	5/P										
654	3037150952	D-1SS190(TE85L) D4	1	5/P										
655	3037154602	D-1SS319(TE85R) D5	1	5/P										
656	3037153902	D-1SS294(TE85R) D6	1	5/P										
657	3037153902	D-1SS294(TE85R) D7	1	5/P										
663	4843309882	J-DHBRD30-S13N4 CN3	1	1/P										
664	4843309905	J-B26B-PHDSS CN4	1	1/P										
665	4843309885	J-DHBRK100S13NN CN5	1	1/P										
666	4843309891	J-52368-1001 CN6	1	1/P										
668	4843307788	J-53313-3415 CN8	1	5/P										
669	4843307785	J-53313-2615 CN9	1	5/P										
670	4843309883	J-DHBRD50-S13N4 CN10	1	1/P										
671B	4843307793	J-174215-1 CN11	1	1/P	A	-	J	G01C317					DP2000/2500	
672	4843308501	J-DHBPB050S131N CN12	1	1/P										
673	4843308501	J-DHBPB050S131N CN13	1	1/P										
674	4843309954	J-1B100-6102JN CN14	1	1/P										
675	4843309903	J-DHBPB100S13NN CN15	1	1/P										
676B	4843307778	J-53313-1215 CN16	1	5/P	A	-	J	G01C317					DP2000/2500	
677	4843306504	J-53253-1010 CN17	1	10/P										
678	4843309906	J-B8B-PH-K-S CN18	1	1/P										

PWA-MAIN (2/2)

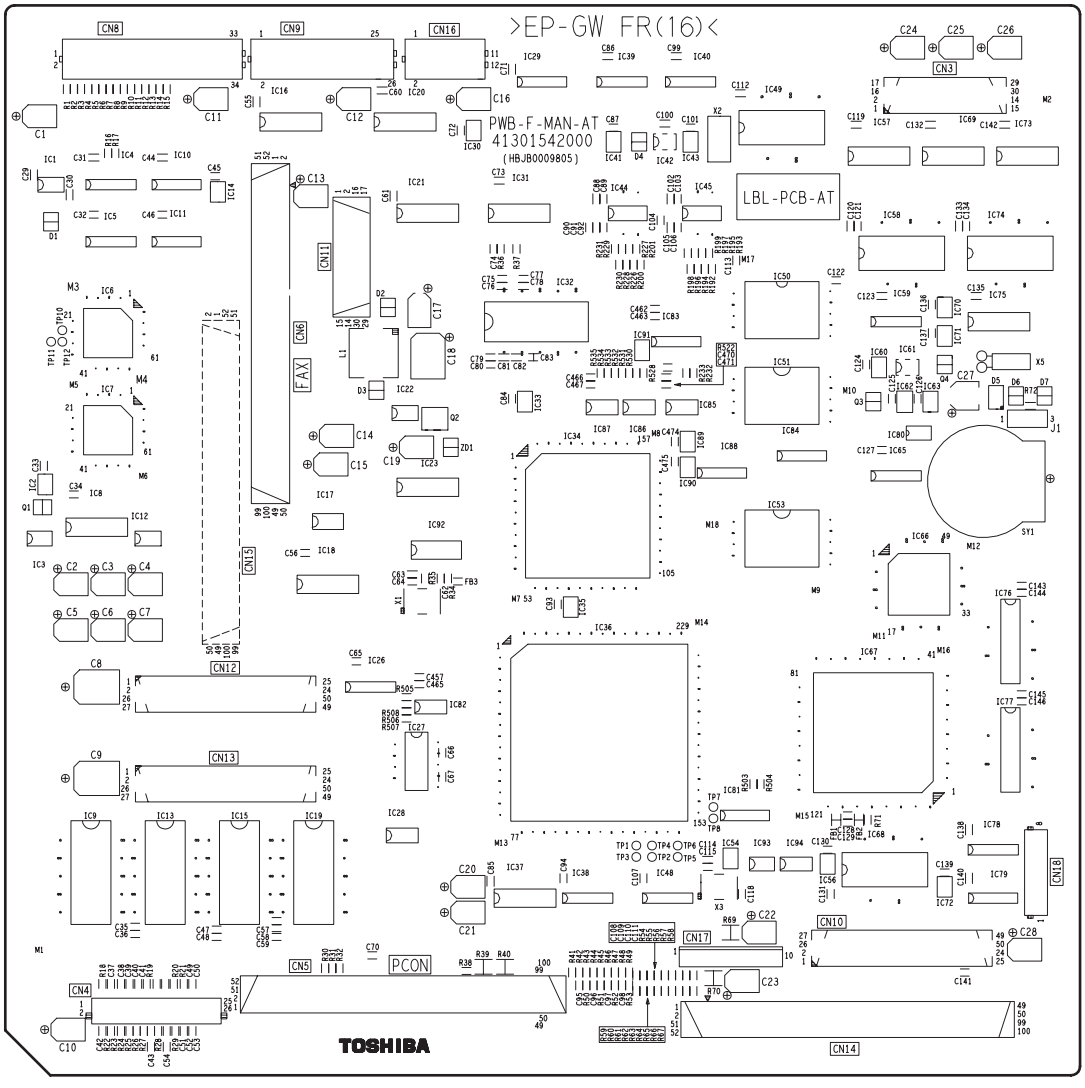
>EP-GW FR(16)<
PWB-F-MAN-AT
41301542000
(HBJB0009805)
LBL-PCB-AT
FAX
PCON
TOSHIBA

PWA-MAIN (2/2)

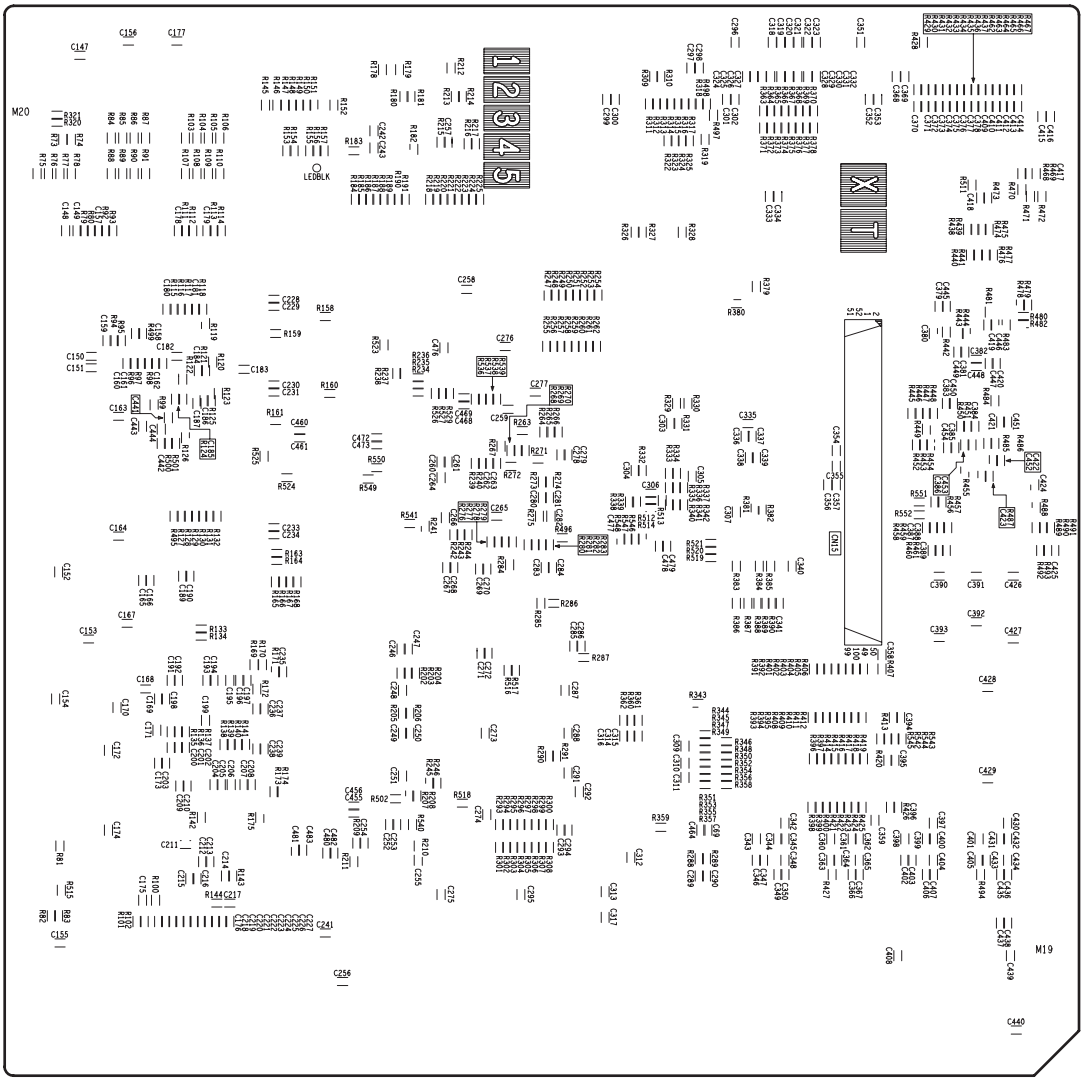

ITEM NO.	PARTS NO.	PARTS NAME	Q'TY / PAGE	Q'TY / PACK	P	I	R	BSI NO.	TO	T	FROM	SERIAL NO.	REMARKS	C
11	4843077282	RTP-4J2A103JDT R1	1	10/P										
12	4843077282	RTP-4J2A103JDT R2	1	10/P										
13	4843077282	RTP-4J2A103JDT R3	1	10/P										
14	4843077282	RTP-4J2A103JDT R4	1	10/P										
15	4843077282	RTP-4J2A103JDT R5	1	10/P										
16	4843077282	RTP-4J2A103JDT R6	1	10/P										
17	4843077282	RTP-4J2A103JDT R7	1	10/P										
18	4843077282	RTP-4J2A103JDT R8	1	10/P										
19	4843077282	RTP-4J2A103JDT R9	1	10/P										
20	4843077282	RTP-4J2A103JDT R10	1	10/P										
21	4843077282	RTP-4J2A103JDT R11	1	10/P										
22	4843077282	RTP-4J2A103JDT R12	1	10/P										
23	4843077282	RTP-4J2A103JDT R13	1	10/P										
24	4843077282	RTP-4J2A103JDT R14	1	10/P										
25	4843077282	RTP-4J2A103JDT R15	1	10/P										
26	4843077982	RTP-4H1J3301FDT R16	1	10/P										
27	4843077282	RTP-4J2A103JDT R17	1	10/P										
28	4843077846	RTP-4J2A330JDT R18	1	10/P										
29	4843077282	RTP-4J2A103JDT R19	1	10/P										
30	4843077282	RTP-4J2A103JDT R20	1	10/P										
31	4843077282	RTP-4J2A103JDT R21	1	10/P										
32	4843077282	RTP-4J2A103JDT R22	1	10/P										
33	4843077282	RTP-4J2A103JDT R23	1	10/P										
34	4843077282	RTP-4J2A103JDT R24	1	10/P										
35	4843077282	RTP-4J2A103JDT R25	1	10/P										
36	4843077282	RTP-4J2A103JDT R26	1	10/P										
37	4843077846	RTP-4J2A330JDT R27	1	10/P										
38	4843077282	RTP-4J2A103JDT R28	1	10/P										
39	4843077846	RTP-4J2A330JDT R29	1	10/P										
40	4843077342	RTP-4J2A101JDT R30	1	10/P										
41	4843077846	RTP-4J2A330JDT R31	1	10/P										
42	4843077408	RTP-4J2A473JDT R32	1	10/P										
44	4843077483	RTP-4J2A470JDT R34	1	10/P										
45	4843077282	RTP-4J2A103JDT R35	1	10/P										
46	4843077846	RTP-4J2A330JDT R36	1	10/P										

ITEM NO.	PARTS NO.	PARTS NAME	Q'TY / PAGE	Q'TY / PACK	P	I	R	BSI NO.	TO	T	FROM	SERIAL NO.	REMARKS	C
47	4843077282	RTP-4J2A103JDT R37	1	10/P	F	-	J	G01B232						
47A	4843077282	RTP-4J2A103JDT R37	1	10/P	-	-	-	G01C317			47		DP1600	
48	4843077282	RTP-4J2A103JDT R38	1	10/P										
50	4843077989	RTP-5Z2E000JDT R40	1	10/P					50A					
51	4843077846	RTP-4J2A330JDT R41	1	10/P										
52	4843077846	RTP-4J2A330JDT R42	1	10/P										
53	4843077846	RTP-4J2A330JDT R43	1	10/P										
54	4843077846	RTP-4J2A330JDT R44	1	10/P										
55	4843077846	RTP-4J2A330JDT R45	1	10/P										
56	4843077846	RTP-4J2A330JDT R46	1	10/P										
57	4843077846	RTP-4J2A330JDT R47	1	10/P										
58	4843077846	RTP-4J2A330JDT R48	1	10/P										
59	4843077846	RTP-4J2A330JDT R49	1	10/P										
60	4843077282	RTP-4J2A103JDT R50	1	10/P										
61	4843077282	RTP-4J2A103JDT R51	1	10/P										
62	4843077282	RTP-4J2A103JDT R52	1	10/P										
63	4843077282	RTP-4J2A103JDT R53	1	10/P										
64	4843077282	RTP-4J2A103JDT R54	1	10/P										
65	4843077282	RTP-4J2A103JDT R55	1	10/P										
66	4843077282	RTP-4J2A103JDT R56	1	10/P										
67	4843077282	RTP-4J2A103JDT R57	1	10/P										
68	4843077282	RTP-4J2A103JDT R58	1	10/P										
69	4843077846	RTP-4J2A330JDT R59	1	10/P										
70	4843077846	RTP-4J2A330JDT R60	1	10/P										
71	4843077846	RTP-4J2A330JDT R61	1	10/P										
72	4843077846	RTP-4J2A330JDT R62	1	10/P										
73	4843077846	RTP-4J2A330JDT R63	1	10/P										
74	4843077846	RTP-4J2A330JDT R64	1	10/P										
75	4843077846	RTP-4J2A330JDT R65	1	10/P										
76	4843077846	RTP-4J2A330JDT R66	1	10/P										
77	4843077846	RTP-4J2A330JDT R67	1	10/P										
80	4843077989	RTP-5Z2E000JDT R70	1	10/P					80A					
81	4843076858	RTP-4N1JR50JDT R71	1	10/P										
82	4843077322	RTP-4J2A102JDT R72	1	10/P										
83	4843077282	RTP-4J2A103JDT R73	1	10/P										

ITEM NO.	PARTS NO.	PARTS NAME	Q'TY / PAGE	Q'TY / PACK	P	I	R	BSI NO.	TO	T	FROM	SERIAL NO.	REMARKS	C
84	4843077846	RTP-4J2A330JDT R74	1	10/P										
85	4843077483	RTP-4J2A470JDT R75	1	10/P										
86	4843077483	RTP-4J2A470JDT R76	1	10/P										
87	4843077483	RTP-4J2A470JDT R77	1	10/P										
88	4843077483	RTP-4J2A470JDT R78	1	10/P										
89	4843077846	RTP-4J2A330JDT R79	1	10/P										
90	4843077282	RTP-4J2A103JDT R80	1	10/P										
91	4843077282	RTP-4J2A103JDT R81	1	10/P										
93	4843076858	RTP-4N1JR50JDT R83	1	10/P										
94	4843077483	RTP-4J2A470JDT R84	1	10/P										
95	4843077483	RTP-4J2A470JDT R85	1	10/P										
96	4843077483	RTP-4J2A470JDT R86	1	10/P										
97	4843077483	RTP-4J2A470JDT R87	1	10/P										
98	4843077483	RTP-4J2A470JDT R88	1	10/P										
99	4843077483	RTP-4J2A470JDT R89	1	10/P										
100	4843077483	RTP-4J2A470JDT R90	1	10/P										
101	4843077483	RTP-4J2A470JDT R91	1	10/P										
102	4843077846	RTP-4J2A330JDT R92	1	10/P										
103	4843077282	RTP-4J2A103JDT R93	1	10/P										
104	4843077342	RTP-4J2A101JDT R94	1	10/P										
105	4843077282	RTP-4J2A103JDT R95	1	10/P										
106	4843077887	RTP-4J2A151JDF R96	1	10/P										
107	4843077322	RTP-4J2A102JDT R97	1	10/P										
108	4843077887	RTP-4J2A151JDF R98	1	10/P										
109	4843077282	RTP-4J2A103JDT R99	1	10/P										
110	4843077282	RTP-4J2A103JDT R100	1	10/P										
111	4843077282	RTP-4J2A103JDT R101	1	10/P										
112	4843077282	RTP-4J2A103JDT R102	1	10/P										
113	4843077483	RTP-4J2A470JDT R103	1	10/P										
114	4843077483	RTP-4J2A470JDT R104	1	10/P										
115	4843077483	RTP-4J2A470JDT R105	1	10/P										
116	4843077483	RTP-4J2A470JDT R106	1	10/P										
117	4843077483	RTP-4J2A470JDT R107	1	10/P										
118	4843077483	RTP-4J2A470JDT R108	1	10/P										
119	4843077483	RTP-4J2A470JDT R109	1	10/P										

ITEM NO.	PARTS NO.	PARTS NAME	Q'TY / PAGE	Q'TY / PACK	P	I	R	BSI NO.	TO	T	FROM	SERIAL NO.	REMARKS	C
120	4843077483	RTP-4J2A470JDT R110	1	10/P										
121	4843077846	RTP-4J2A330JDT R111	1	10/P										
122	4843077282	RTP-4J2A103JDT R112	1	10/P										
123	4843077846	RTP-4J2A330JDT R113	1	10/P										
124	4843077282	RTP-4J2A103JDT R114	1	10/P										
125	4843076863	RTP-4J2A123JDT R115	1	10/P										
126	4843077282	RTP-4J2A103JDT R116	1	10/P										
127	4843077846	RTP-4J2A330JDT R117	1	10/P										
128	4843077846	RTP-4J2A330JDT R118	1	10/P										
129	4843077282	RTP-4J2A103JDT R119	1	10/P										
130	4843077408	RTP-4J2A473JDT R120	1	10/P										
131	4843077846	RTP-4J2A330JDT R121	1	10/P										
132	4843077322	RTP-4J2A102JDT R122	1	10/P										
133	4843077348	RTP-4J2A472JDT R123	1	10/P										
134	4843077342	RTP-4J2A101JDT R124	1	10/P										
135	4843077887	RTP-4J2A151JDF R125	1	10/P										
136	4843077846	RTP-4J2A330JDT R126	1	10/P										
137	4843077846	RTP-4J2A330JDT R127	1	10/P										
138	4843077846	RTP-4J2A330JDT R128	1	10/P										
139	4843077846	RTP-4J2A330JDT R129	1	10/P										
140	4843077846	RTP-4J2A330JDT R130	1	10/P										
141	4843077846	RTP-4J2A330JDT R131	1	10/P										
142	4843077846	RTP-4J2A330JDT R132	1	10/P					142A					
143	4843077342	RTP-4J2A101JDT R133	1	10/P										
144	4843077342	RTP-4J2A101JDT R134	1	10/P										
145	4843077342	RTP-4J2A101JDT R135	1	10/P										
146	4843077844	RTP-4J2A220JDT R136	1	10/P										
147	4843077844	RTP-4J2A220JDT R137	1	10/P										
149	4843076858	RTP-4N1JR50JDT R139	1	10/P					149A					
150	4843077282	RTP-4J2A103JDT R140	1	10/P										
151	4843077342	RTP-4J2A101JDT R141	1	10/P										
152	4843077348	RTP-4J2A472JDT R142	1	10/P										
153	4843077846	RTP-4J2A330JDT R143	1	10/P										
154	4843077844	RTP-4J2A220JDT R144	1	10/P										
155	4843077408	RTP-4J2A473JDT R145	1	10/P										

ITEM NO.	PARTS NO.	PARTS NAME	Q'TY / PAGE	Q'TY / PACK	P	I	R	BSI NO.	TO	T	FROM	SERIAL NO.	REMARKS	C
156	4843077485	RTP-4J2A104JDT R146	1	10/P										
157	4843077408	RTP-4J2A473JDT R147	1	10/P										
158	4843077342	RTP-4J2A101JDT R148	1	10/P										
159	4843077342	RTP-4J2A101JDT R149	1	10/P										
160	4843077342	RTP-4J2A101JDT R150	1	10/P										
161	4843077342	RTP-4J2A101JDT R151	1	10/P										
162	4843077342	RTP-4J2A101JDT R152	1	10/P										
163	4843077408	RTP-4J2A473JDT R153	1	10/P										
164	4843077408	RTP-4J2A473JDT R154	1	10/P										
165	4843077342	RTP-4J2A101JDT R155	1	10/P										
166	4843077408	RTP-4J2A473JDT R156	1	10/P										
167	4843077408	RTP-4J2A473JDT R157	1	10/P										
168	4843077282	RTP-4J2A103JDT R158	1	10/P										
169	4843077840	RTP-4J2A100JDT R159	1	10/P					169A					
170	4843077840	RTP-4J2A100JDT R160	1	10/P										
171	4843077840	RTP-4J2A100JDT R161	1	10/P					171A					
173	4843077840	RTP-4J2A100JDT R163	1	10/P										
174	4843077840	RTP-4J2A100JDT R164	1	10/P					174A					
175	4843077846	RTP-4J2A330JDT R165	1	10/P										
176	4843077846	RTP-4J2A330JDT R166	1	10/P										
177	4843077846	RTP-4J2A330JDT R167	1	10/P										
178	4843077342	RTP-4J2A101JDT R168	1	10/P										
179	4843077348	RTP-4J2A472JDT R169	1	10/P										
180	4843077348	RTP-4J2A472JDT R170	1	10/P										
182	4843076858	RTP-4N1JR50JDT R172	1	10/P					182A					
183	4843077348	RTP-4J2A472JDT R173	1	10/P										
184	4843077348	RTP-4J2A472JDT R174	1	10/P										
185	4843077282	RTP-4J2A103JDT R175	1	10/P										
188	4843077485	RTP-4J2A104JDT R178	1	10/P										
189	4843077485	RTP-4J2A104JDT R179	1	10/P										
190	4843077408	RTP-4J2A473JDT R180	1	10/P										
191	4843077408	RTP-4J2A473JDT R181	1	10/P										
193	4843077475	RTP-4H1J2200FDT R183	1	10/P										
194	4843077342	RTP-4J2A101JDT R184	1	10/P										
195	4843077342	RTP-4J2A101JDT R185	1	10/P										

ITEM NO.	PARTS NO.	PARTS NAME	Q'TY / PAGE	Q'TY / PACK	P	I	R	BSI NO.	TO	T	FROM	SERIAL NO.	REMARKS	C
196	4843077342	RTP-4J2A101JDT R186	1	10/P										
197	4843077342	RTP-4J2A101JDT R187	1	10/P										
198	4843077342	RTP-4J2A101JDT R188	1	10/P										
199	4843077342	RTP-4J2A101JDT R189	1	10/P										
200	4843077342	RTP-4J2A101JDT R190	1	10/P										
201	4843077342	RTP-4J2A101JDT R191	1	10/P										
202	4843077846	RTP-4J2A330JDT R192	1	10/P										
203	4843077846	RTP-4J2A330JDT R193	1	10/P										
204	4843077846	RTP-4J2A330JDT R194	1	10/P										
205	4843077846	RTP-4J2A330JDT R195	1	10/P										
206	4843077846	RTP-4J2A330JDT R196	1	10/P										
207	4843077846	RTP-4J2A330JDT R197	1	10/P										
208	4843077846	RTP-4J2A330JDT R198	1	10/P										
209	4843077846	RTP-4J2A330JDT R199	1	10/P										
210	4843077846	RTP-4J2A330JDT R200	1	10/P										
211	4843077846	RTP-4J2A330JDT R201	1	10/P										
212	4843077342	RTP-4J2A101JDT R202	1	10/P										
213	4843077342	RTP-4J2A101JDT R203	1	10/P										
214	4843077342	RTP-4J2A101JDT R204	1	10/P										
215	4843077282	RTP-4J2A103JDT R205	1	10/P										
216	4843077282	RTP-4J2A103JDT R206	1	10/P										
217	4843077844	RTP-4J2A220JDT R207	1	10/P										
218	4843077844	RTP-4J2A220JDT R208	1	10/P										
219	4843077483	RTP-4J2A470JDT R209	1	10/P										
220	4843077844	RTP-4J2A220JDT R210	1	10/P										
221	4843077282	RTP-4J2A103JDT R211	1	10/P										
222	4843077408	RTP-4J2A473JDT R212	1	10/P										
223	4843077408	RTP-4J2A473JDT R213	1	10/P										
224	4843077408	RTP-4J2A473JDT R214	1	10/P										
225	4843077322	RTP-4J2A102JDT R215	1	10/P										
226	4843077282	RTP-4J2A103JDT R216	1	10/P										
227	4843077408	RTP-4J2A473JDT R217	1	10/P										
228	4843077483	RTP-4J2A470JDT R218	1	10/P										
229	4843077483	RTP-4J2A470JDT R219	1	10/P										
230	4843077483	RTP-4J2A470JDT R220	1	10/P										

ITEM NO.	PARTS NO.	PARTS NAME	Q'TY / PAGE	Q'TY / PACK	P	I	R	BSI NO.	TO	T	FROM	SERIAL NO.	REMARKS	C
231	4843077483	RTP-4J2A470JDT R221	1	10/P										
232	4843077483	RTP-4J2A470JDT R222	1	10/P										
233	4843077483	RTP-4J2A470JDT R223	1	10/P										
234	4843077483	RTP-4J2A470JDT R224	1	10/P										
235	4843077483	RTP-4J2A470JDT R225	1	10/P										
236	4843077846	RTP-4J2A330JDT R226	1	10/P										
237	4843077846	RTP-4J2A330JDT R227	1	10/P										
238	4843077846	RTP-4J2A330JDT R228	1	10/P										
239	4843077846	RTP-4J2A330JDT R229	1	10/P										
240	4843077846	RTP-4J2A330JDT R230	1	10/P										
241	4843077846	RTP-4J2A330JDT R231	1	10/P										
242	4843077840	RTP-4J2A100JDT R232	1	10/P										
243	4843077840	RTP-4J2A100JDT R233	1	10/P										
244	4843077840	RTP-4J2A100JDT R234	1	10/P										
245	4843077840	RTP-4J2A100JDT R235	1	10/P										
246	4843077840	RTP-4J2A100JDT R236	1	10/P										
247	4843077840	RTP-4J2A100JDT R237	1	10/P										
248	4843077342	RTP-4J2A101JDT R238	1	10/P										
249	4843077282	RTP-4J2A103JDT R239	1	10/P										
251	4843077342	RTP-4J2A101JDT R241	1	10/P										
252	4843077846	RTP-4J2A330JDT R242	1	10/P										
253	4843077846	RTP-4J2A330JDT R243	1	10/P										
254	4843077348	RTP-4J2A472JDT R244	1	10/P										
256	4843077408	RTP-4J2A473JDT R246	1	10/P					256A					
257	4843077846	RTP-4J2A330JDT R247	1	10/P										
258	4843077846	RTP-4J2A330JDT R248	1	10/P										
259	4843077846	RTP-4J2A330JDT R249	1	10/P										
260	4843077846	RTP-4J2A330JDT R250	1	10/P										
261	4843077846	RTP-4J2A330JDT R251	1	10/P										
262	4843077846	RTP-4J2A330JDT R252	1	10/P										
263	4843077846	RTP-4J2A330JDT R253	1	10/P										
264	4843077846	RTP-4J2A330JDT R254	1	10/P										
265	4843077846	RTP-4J2A330JDT R255	1	10/P										
266	4843077846	RTP-4J2A330JDT R256	1	10/P										
267	4843077846	RTP-4J2A330JDT R257	1	10/P										

ITEM NO.	PARTS NO.	PARTS NAME	Q'TY / PAGE	Q'TY / PACK	P	I	R	BSI NO.	TO	T	FROM	SERIAL NO.	REMARKS	C
268	4843077846	RTP-4J2A330JDT R258	1	10/P										
269	4843077846	RTP-4J2A330JDT R259	1	10/P										
270	4843077846	RTP-4J2A330JDT R260	1	10/P										
271	4843077846	RTP-4J2A330JDT R261	1	10/P										
272	4843077846	RTP-4J2A330JDT R262	1	10/P										
273	4843077282	RTP-4J2A103JDT R263	1	10/P										
274	4843077342	RTP-4J2A101JDT R264	1	10/P										
275	4843077342	RTP-4J2A101JDT R265	1	10/P										
276	4843077342	RTP-4J2A101JDT R266	1	10/P										
277	4843077840	RTP-4J2A100JDT R267	1	10/P										
278	4843077282	RTP-4J2A103JDT R268	1	10/P										
279	4843077282	RTP-4J2A103JDT R269	1	10/P										
280	4843077282	RTP-4J2A103JDT R270	1	10/P										
281	4843077846	RTP-4J2A330JDT R271	1	10/P										
282	4843077846	RTP-4J2A330JDT R272	1	10/P										
283	4843077846	RTP-4J2A330JDT R273	1	10/P										
284	4843077846	RTP-4J2A330JDT R274	1	10/P										
285	4843077408	RTP-4J2A473JDT R275	1	10/P										
286	4843077282	RTP-4J2A103JDT R276	1	10/P										
287	4843077846	RTP-4J2A330JDT R277	1	10/P										
288	4843077282	RTP-4J2A103JDT R278	1	10/P										
289	4843077846	RTP-4J2A330JDT R279	1	10/P					289A					
290	4843077408	RTP-4J2A473JDT R280	1	10/P										
291	4843077408	RTP-4J2A473JDT R281	1	10/P										
292	4843077342	RTP-4J2A101JDT R282	1	10/P										
293	4843077282	RTP-4J2A103JDT R283	1	10/P										
294	4843077408	RTP-4J2A473JDT R284	1	10/P										
295	4843077282	RTP-4J2A103JDT R285	1	10/P										
296	4843077846	RTP-4J2A330JDT R286	1	10/P										
297	4843077282	RTP-4J2A103JDT R287	1	10/P										
298	4843077342	RTP-4J2A101JDT R288	1	10/P										
299	4843077342	RTP-4J2A101JDT R289	1	10/P										
300	4843077408	RTP-4J2A473JDT R290	1	10/P					300A					
303	4843077846	RTP-4J2A330JDT R293	1	10/P										
304	4843077846	RTP-4J2A330JDT R294	1	10/P										

ITEM NO.	PARTS NO.	PARTS NAME	Q'TY / PAGE	Q'TY / PACK	P	I	R	BSI NO.	TO	T	FROM	SERIAL NO.	REMARKS	C
305	4843077846	RTP-4J2A330JDT R295	1	10/P										
306	4843077846	RTP-4J2A330JDT R296	1	10/P										
307	4843077846	RTP-4J2A330JDT R297	1	10/P										
308	4843077846	RTP-4J2A330JDT R298	1	10/P										
309	4843077846	RTP-4J2A330JDT R299	1	10/P										
310	4843077846	RTP-4J2A330JDT R300	1	10/P										
311	4843077846	RTP-4J2A330JDT R301	1	10/P										
312	4843077846	RTP-4J2A330JDT R302	1	10/P										
313	4843077846	RTP-4J2A330JDT R303	1	10/P										
314	4843077846	RTP-4J2A330JDT R304	1	10/P										
315	4843077846	RTP-4J2A330JDT R305	1	10/P										
316	4843077846	RTP-4J2A330JDT R306	1	10/P										
317	4843077846	RTP-4J2A330JDT R307	1	10/P										
318	4843077846	RTP-4J2A330JDT R308	1	10/P										
319B	4843076858	RTP-4N1JR50JDT R309	1	10/P	A	-	J	G01C317					DP2000/2500	
320B	4843076858	RTP-4N1JR50JDT R310	1	10/P	A	-	J	G01C317					DP2000/2500	
321	4843077282	RTP-4J2A103JDT R311	1	10/P										
322	4843077846	RTP-4J2A330JDT R312	1	10/P										
323	4843077282	RTP-4J2A103JDT R313	1	10/P										
324	4843077846	RTP-4J2A330JDT R314	1	10/P										
325	4843077282	RTP-4J2A103JDT R315	1	10/P										
326	4843077846	RTP-4J2A330JDT R316	1	10/P										
327	4843077282	RTP-4J2A103JDT R317	1	10/P										
328	4843077846	RTP-4J2A330JDT R318	1	10/P										
329	4843077282	RTP-4J2A103JDT R319	1	10/P										
330	4843077282	RTP-4J2A103JDT R320	1	10/P										
331	4843077846	RTP-4J2A330JDT R321	1	10/P										
332	4843077282	RTP-4J2A103JDT R322	1	10/P										
333	4843077846	RTP-4J2A330JDT R323	1	10/P										
334	4843077282	RTP-4J2A103JDT R324	1	10/P										
335	4843077846	RTP-4J2A330JDT R325	1	10/P										
336	4843077282	RTP-4J2A103JDT R326	1	10/P										
337	4843077282	RTP-4J2A103JDT R327	1	10/P										
338	4843077282	RTP-4J2A103JDT R328	1	10/P										
339	4843076858	RTP-4N1JR50JDT R329	1	10/P					339A					

ITEM NO.	PARTS NO.	PARTS NAME	Q'TY / PAGE	Q'TY / PACK	P	I	R	BSI NO.	TO	T	FROM	SERIAL NO.	REMARKS	C
340	4843076858	RTP-4N1JR50JDT R330	1	10/P										
341	4843076858	RTP-4N1JR50JDT R331	1	10/P					341A					
342	4843077475	RTP-4H1J2200FDT R332	1	10/P										
343	4843077282	RTP-4J2A103JDT R333	1	10/P										
344	4843077282	RTP-4J2A103JDT R334	1	10/P										
345	4843077817	RTP-4J2A512JDT R335	1	10/P										
346	4843077347	RTP-4J2A222JDT R336	1	10/P										
347	4843077817	RTP-4J2A512JDT R337	1	10/P										
348	4843077282	RTP-4J2A103JDT R338	1	10/P	F	-	J	G01B232	348A					
348A	4843077282	RTP-4J2A103JDT R338	1	10/P	-	-	-	G01C317			348		DP1600	
348C	4843077282	RTP-4J2A103JDT R338	1	10/P	A	-	J	G01C317					DP2500	
350	4843077893	RTP-4J2A564JDT R340	1	10/P										
351	4843077893	RTP-4J2A564JDT R341	1	10/P										
352	4843077893	RTP-4J2A564JDT R342	1	10/P										
353	4843077846	RTP-4J2A330JDT R343	1	10/P										
354	4843077846	RTP-4J2A330JDT R344	1	10/P										
355	4843077846	RTP-4J2A330JDT R345	1	10/P										
356	4843077846	RTP-4J2A330JDT R346	1	10/P										
357	4843077846	RTP-4J2A330JDT R347	1	10/P										
358	4843077846	RTP-4J2A330JDT R348	1	10/P										
359	4843077846	RTP-4J2A330JDT R349	1	10/P										
360	4843077846	RTP-4J2A330JDT R350	1	10/P										
361	4843077846	RTP-4J2A330JDT R351	1	10/P										
362	4843077846	RTP-4J2A330JDT R352	1	10/P										
363	4843077846	RTP-4J2A330JDT R353	1	10/P										
364	4843077846	RTP-4J2A330JDT R354	1	10/P										
365	4843077846	RTP-4J2A330JDT R355	1	10/P										
366	4843077846	RTP-4J2A330JDT R356	1	10/P										
367	4843077846	RTP-4J2A330JDT R357	1	10/P										
368	4843077846	RTP-4J2A330JDT R358	1	10/P										
369	4843077846	RTP-4J2A330JDT R359	1	10/P										
370	4843077846	RTP-4J2A330JDT R360	1	10/P										
371	4843077846	RTP-4J2A330JDT R361	1	10/P										
372	4843077846	RTP-4J2A330JDT R362	1	10/P										
373	4843077846	RTP-4J2A330JDT R363	1	10/P										

ITEM NO.	PARTS NO.	PARTS NAME	Q'TY / PAGE	Q'TY / PACK	P	I	R	BSI NO.	TO	T	FROM	SERIAL NO.	REMARKS	C
374	4843077846	RTP-4J2A330JDT R364	1	10/P										
375	4843077846	RTP-4J2A330JDT R365	1	10/P										
376	4843077846	RTP-4J2A330JDT R366	1	10/P										
377	4843077846	RTP-4J2A330JDT R367	1	10/P										
378	4843077846	RTP-4J2A330JDT R368	1	10/P										
379	4843077846	RTP-4J2A330JDT R369	1	10/P										
380	4843077846	RTP-4J2A330JDT R370	1	10/P										
381	4843077408	RTP-4J2A473JDT R371	1	10/P										
382	4843077408	RTP-4J2A473JDT R372	1	10/P										
383	4843077408	RTP-4J2A473JDT R373	1	10/P										
384	4843077408	RTP-4J2A473JDT R374	1	10/P										
385	4843077408	RTP-4J2A473JDT R375	1	10/P										
386	4843077408	RTP-4J2A473JDT R376	1	10/P										
387	4843077408	RTP-4J2A473JDT R377	1	10/P										
388	4843077408	RTP-4J2A473JDT R378	1	10/P										
389	4843077282	RTP-4J2A103JDT R379	1	10/P										
390	4843077282	RTP-4J2A103JDT R380	1	10/P										
391	4843076861	RTP-4J2A332JDT R381	1	10/P										
392	4843076861	RTP-4J2A332JDT R382	1	10/P										
393	4843077342	RTP-4J2A101JDT R383	1	10/P										
394	4843077342	RTP-4J2A101JDT R384	1	10/P										
395	4843077342	RTP-4J2A101JDT R385	1	10/P										
396	4843077342	RTP-4J2A101JDT R386	1	10/P										
397	4843077342	RTP-4J2A101JDT R387	1	10/P										
398	4843077342	RTP-4J2A101JDT R388	1	10/P										
399	4843077846	RTP-4J2A330JDT R389	1	10/P										
400	4843077342	RTP-4J2A101JDT R390	1	10/P										
401	4843077846	RTP-4J2A330JDT R391	1	10/P										
402	4843077846	RTP-4J2A330JDT R392	1	10/P										
403	4843077846	RTP-4J2A330JDT R393	1	10/P										
404	4843077846	RTP-4J2A330JDT R394	1	10/P										
405	4843077846	RTP-4J2A330JDT R395	1	10/P										
406	4843077846	RTP-4J2A330JDT R396	1	10/P										
407	4843077846	RTP-4J2A330JDT R397	1	10/P										
408	4843077846	RTP-4J2A330JDT R398	1	10/P										

ITEM NO.	PARTS NO.	PARTS NAME	Q'TY / PAGE	Q'TY / PACK	P	I	R	BSI NO.	TO	T	FROM	SERIAL NO.	REMARKS	C
409	4843077846	RTP-4J2A330JDT R399	1	10/P										
410	4843077846	RTP-4J2A330JDT R400	1	10/P										
411	4843077846	RTP-4J2A330JDT R401	1	10/P										
412	4843077846	RTP-4J2A330JDT R402	1	10/P										
413	4843077846	RTP-4J2A330JDT R403	1	10/P										
414	4843077846	RTP-4J2A330JDT R404	1	10/P										
415	4843077846	RTP-4J2A330JDT R405	1	10/P										
416	4843077846	RTP-4J2A330JDT R406	1	10/P										
417	4843077846	RTP-4J2A330JDT R407	1	10/P										
418	4843077846	RTP-4J2A330JDT R408	1	10/P										
419	4843077846	RTP-4J2A330JDT R409	1	10/P										
420	4843077846	RTP-4J2A330JDT R410	1	10/P										
421	4843077846	RTP-4J2A330JDT R411	1	10/P										
422	4843077846	RTP-4J2A330JDT R412	1	10/P										
423	4843077846	RTP-4J2A330JDT R413	1	10/P										
424	4843077846	RTP-4J2A330JDT R414	1	10/P										
425	4843077846	RTP-4J2A330JDT R415	1	10/P										
426	4843077846	RTP-4J2A330JDT R416	1	10/P										
427	4843077846	RTP-4J2A330JDT R417	1	10/P										
428	4843077846	RTP-4J2A330JDT R418	1	10/P										
429	4843077846	RTP-4J2A330JDT R419	1	10/P										
430	4843077846	RTP-4J2A330JDT R420	1	10/P										
431	4843077846	RTP-4J2A330JDT R421	1	10/P										
432	4843077846	RTP-4J2A330JDT R422	1	10/P										
433	4843077846	RTP-4J2A330JDT R423	1	10/P										
434	4843077846	RTP-4J2A330JDT R424	1	10/P										
435	4843077846	RTP-4J2A330JDT R425	1	10/P										
436	4843077846	RTP-4J2A330JDT R426	1	10/P										
437	4843077996	RTP-4J2A680JDT R427	1	10/P										
438	4843077846	RTP-4J2A330JDT R428	1	10/P										
439	4843077846	RTP-4J2A330JDT R429	1	10/P										
440	4843077846	RTP-4J2A330JDT R430	1	10/P										
441	4843077846	RTP-4J2A330JDT R431	1	10/P										
442	4843077846	RTP-4J2A330JDT R432	1	10/P										
443	4843077846	RTP-4J2A330JDT R433	1	10/P										

ITEM NO.	PARTS NO.	PARTS NAME	Q'TY / PAGE	Q'TY / PACK	P	I	R	BSI NO.	TO	T	FROM	SERIAL NO.	REMARKS	C
444	4843077846	RTP-4J2A330JDT R434	1	10/P										
445	4843077846	RTP-4J2A330JDT R435	1	10/P										
446	4843077846	RTP-4J2A330JDT R436	1	10/P										
447	4843077846	RTP-4J2A330JDT R437	1	10/P										
448	4843077991	RTP-4H1J5600FDT R438	1	10/P										
449	4843076858	RTP-4N1JR50JDT R439	1	10/P										
450	4843077981	RTP-4H1J2701FDT R440	1	10/P										
451	4843077896	RTP-4H1J9101FDT R441	1	10/P										
452	4843077846	RTP-4J2A330JDT R442	1	10/P										
453	4843077342	RTP-4J2A101JDT R443	1	10/P										
454	4843077282	RTP-4J2A103JDT R444	1	10/P										
455	4843077282	RTP-4J2A103JDT R445	1	10/P										
456	4843077282	RTP-4J2A103JDT R446	1	10/P										
457	4843077282	RTP-4J2A103JDT R447	1	10/P										
458	4843077282	RTP-4J2A103JDT R448	1	10/P										
459	4843077408	RTP-4J2A473JDT R449	1	10/P										
460	4843076858	RTP-4N1JR50JDT R450	1	10/P										
461	4843077846	RTP-4J2A330JDT R451	1	10/P										
462	4843077408	RTP-4J2A473JDT R452	1	10/P										
463	4843077282	RTP-4J2A103JDT R453	1	10/P										
464	4843077282	RTP-4J2A103JDT R454	1	10/P										
465	4843077846	RTP-4J2A330JDT R455	1	10/P										
466	4843077282	RTP-4J2A103JDT R456	1	10/P										
467	4843077282	RTP-4J2A103JDT R457	1	10/P										
468	4843077282	RTP-4J2A103JDT R458	1	10/P										
469	4843077348	RTP-4J2A472JDT R459	1	10/P										
470	4843077282	RTP-4J2A103JDT R460	1	10/P										
471	4843077348	RTP-4J2A472JDT R461	1	10/P										
472	4843077846	RTP-4J2A330JDT R462	1	10/P										
473	4843077846	RTP-4J2A330JDT R463	1	10/P										
474	4843077846	RTP-4J2A330JDT R464	1	10/P										
475	4843077846	RTP-4J2A330JDT R465	1	10/P										
476	4843077846	RTP-4J2A330JDT R466	1	10/P										
477	4843077846	RTP-4J2A330JDT R467	1	10/P										
478	4843077993	RTP-4H1J5603FDT R468	1	10/P										

ITEM NO.	PARTS NO.	PARTS NAME	Q'TY / PAGE	Q'TY / PACK	P	I	R	BSI NO.	TO	T	FROM	SERIAL NO.	REMARKS	C
479	4843077951	RTP-4H1J4703FDT R469	1	10/P										
480	4843077350	RTP-4J2A105JDT R470	1	10/P										
481	4843077481	RTP-4H1J1003FDT R471	1	10/P										
482	4843077490	RTP-4H1J1001FDT R472	1	10/P										
483	4843077481	RTP-4H1J1003FDT R473	1	10/P										
484	4843077990	RTP-4H1J2000FDT R474	1	10/P										
485	4843077475	RTP-4H1J2200FDT R475	1	10/P										
486	4843077895	RTP-4H1J6201FDT R476	1	10/P										
487	4843077992	RTP-4H1J1201FDT R477	1	10/P										
490	4843077846	RTP-4J2A330JDT R480	1	10/P										
491	4843077846	RTP-4J2A330JDT R481	1	10/P										
492	4843077846	RTP-4J2A330JDT R482	1	10/P										
493	4843077846	RTP-4J2A330JDT R483	1	10/P										
494	4843077282	RTP-4J2A103JDT R484	1	10/P										
495	4843077282	RTP-4J2A103JDT R485	1	10/P										
496	4843077282	RTP-4J2A103JDT R486	1	10/P										
497	4843076858	RTP-4N1JR50JDT R487	1	10/P										
498	4843076860	RTP-4J2A152JDT R488	1	10/P										
499	4843076858	RTP-4N1JR50JDT R489	1	10/P										
500	4843077348	RTP-4J2A472JDT R490	1	10/P										
501	4843077416	RTP-4J2A183JDT R491	1	10/P										
503	4843077324	RTP-4J2A224JDT R493	1	10/P										
504	4843077996	RTP-4J2A680JDT R494	1	10/P										
505	4843077846	RTP-4J2A330JDT R495	1	10/P										
506	4843077282	RTP-4J2A103JDT R496	1	10/P										
507	4843076858	RTP-4N1JR50JDT R497	1	10/P										
509	4843077846	RTP-4J2A330JDT R499	1	10/P										
510	4843077871	RTP-4J2A1002FDT R500	1	10/P										
511	4843077873	RTP-4J2A1302FDT R501	1	10/P										
512	4843077844	RTP-4J2A220JDT R502	1	10/P										
513	4843077844	RTP-4J2A220JDT R503	1	10/P										
514	4843077844	RTP-4J2A220JDT R504	1	10/P										
515	4843077844	RTP-4J2A220JDT R505	1	10/P										
516	4843077844	RTP-4J2A220JDT R506	1	10/P										
517	4843077844	RTP-4J2A220JDT R507	1	10/P										

ITEM NO.	PARTS NO.	PARTS NAME	Q'TY / PAGE	Q'TY / PACK	P	I	R	BSI NO.	TO	T	FROM	SERIAL NO.	REMARKS	C
518	4843077844	RTP-4J2A220JDT R508	1	10/P										
521	4843077282	RTP-4J2A103JDT R511	1	10/P										
522	4843077282	RTP-4J2A103JDT R512	1	10/P										
523	4843077282	RTP-4J2A103JDT R513	1	10/P	F	-	J	G01B232	523A					
523A	4843077282	RTP-4J2A103JDT R513	1	10/P	-	-	-	G01C317			523		DP1600	
523C	4843077282	RTP-4J2A103JDT R513	1	10/P	A	-	J	G01C317					DP2500	
524	4843077282	RTP-4J2A103JDT R514	1	10/P										
525	4843076858	RTP-4N1JR50JDT R515	1	10/P					525A					
526	4843076861	RTP-4J2A332JDT R516	1	10/P										
527	4843077282	RTP-4J2A103JDT R517	1	10/P										
528	4843077282	RTP-4J2A103JDT R518	1	10/P										
529	4843077282	RTP-4J2A103JDT R519	1	10/P										
530	4843077282	RTP-4J2A103JDT R520	1	10/P										
531	4843077282	RTP-4J2A103JDT R521	1	10/P										
532	4843077844	RTP-4J2A220JDT R522	1	10/P										
533	4843077844	RTP-4J2A220JDT R523	1	10/P										
534	4843077844	RTP-4J2A220JDT R524	1	10/P										
535	4843077844	RTP-4J2A220JDT R525	1	10/P										
536	4843077840	RTP-4J2A100JDT R526	1	10/P										
537	4843077840	RTP-4J2A100JDT R527	1	10/P										
538	4843077840	RTP-4J2A100JDT R528	1	10/P										
539	4843077840	RTP-4J2A100JDT R529	1	10/P										
540	4843077840	RTP-4J2A100JDT R530	1	10/P										
541	4843077840	RTP-4J2A100JDT R531	1	10/P										
542	4843077840	RTP-4J2A100JDT R532	1	10/P										
543	4843077840	RTP-4J2A100JDT R533	1	10/P										
544	4843077840	RTP-4J2A100JDT R534	1	10/P										
545	4843077840	RTP-4J2A100JDT R535	1	10/P										
546	4843077840	RTP-4J2A100JDT R536	1	10/P										
547	4843077840	RTP-4J2A100JDT R537	1	10/P										
548	4843077840	RTP-4J2A100JDT R538	1	10/P										
549	4843077840	RTP-4J2A100JDT R539	1	10/P										
550	4843077342	RTP-4J2A101JDT R540	1	10/P										
551	4843077846	RTP-4J2A330JDT R541	1	10/P										
552	4843077282	RTP-4J2A103JDT R542	1	10/P										

ITEM NO.	PARTS NO.	PARTS NAME	Q'TY / PAGE	Q'TY / PACK	P	I	R	BSI NO.	TO	T	FROM	SERIAL NO.	REMARKS	C
553	4843077282	RTP-4J2A103JDT R543	1	10/P										
554	4843077282	RTP-4J2A103JDT R544	1	10/P										
555	4843077282	RTP-4J2A103JDT R545	1	10/P										
556	4843077282	RTP-4J2A103JDT R546	1	10/P										
557	4843077483	RTP-4J2A470JDT R547	1	10/P										
558	4843076858	RTP-4N1JR50JDT R548	1	10/P										
559	4843076858	RTP-4N1JR50JDT R550	1	10/P										
560	4843077342	RTP-4J2A101JDT R551	1	10/P										
561	4843077342	RTP-4J2A101JDT R552	1	10/P										
581	4843524930	FL-BK2125HM601T FB1	1	5/P										
582	4843524930	FL-BK2125HM601T FB2	1	5/P										
583	4843524966	FL-BLM11A121SPT FB3	1	5/P										
601	4843309970	J-IMSA-9206H-T J1	1	1/P										
602	4843309962	J-IMSA-9202B103 J1	1	1/P										
621	4843250906	XO-VX-3H33.0000 X1	1	5/S										
622	4843250821	X-CSA4.00MGTF01 X2	1	5/S										
623	4843250907	XO-VX-3H39.9278 X3	1	5/S					623A					
623A	4843250907	XO-VX-3H39.9278 X3	1	5/S	-	-	-	G01C317			623		DP1600	
623B	4843250908	XO-VX-3H54.2174 X3	1	1/C	A	-	J	G01C317					DP2000/2500	
625	4849300084	X-MX38T32.768K5 X5	1	1/C										
651	3037238212	D-02CZ3.3X-85R ZD1	1	5/P										
671	4843524942	LTP-SLF104701R4 L1	1	5/P										
691	4843524918	BT-CR2450-HE4 SY1	1	1/C										

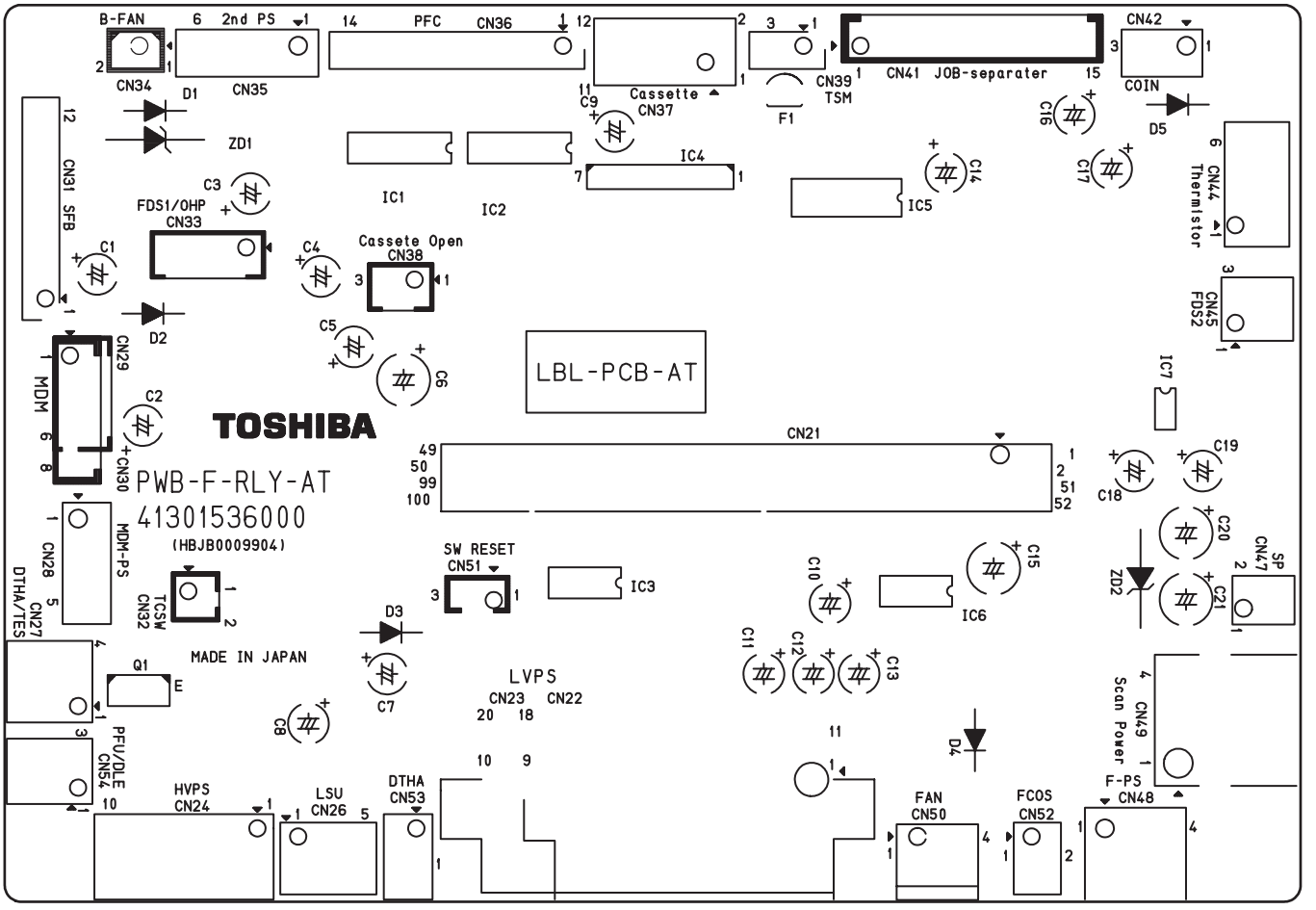
B-FAN
CN34
2nd PS
CN35
PFC
CN36
Cassette
CN37
CN39
TSM
F1
CN41 JOB-separater
CN42
COIN
D1
ZD1
D5
CN31 SFB
C3
FDS1/OHP
CN33
IC1
IC2
IC4
IC5
C14
C16
C17
CN44
Thermistor
C1
C4
Cassete Open
CN38
D2
C5
C6
CN29
MDM
C2
CN30
LBL-PCB-AT
TOSHIBA
PWB-F-RLY-AT
41301536000
(HBJB0009904)
CN21
IC7
C19
C18
C20
C21
ZD2
SP
CN47
CN45
FDS2
SW RESET
CN51
IC3
IC6
C10
C15
CN28
MDM-PS
CN27
DTHA/TES
TCSW
CN32
D3
MADE IN JAPAN
Q1
C7
C8
LVPS
CN23
CN22
C11
C12
C13
D4
Scan Power
CN49
PFU/DLE
CN54
HVPS
CN24
LSU
CN26
DTHA
CN53
FAN
CN50
FCOS
CN52
F-PS
CN48

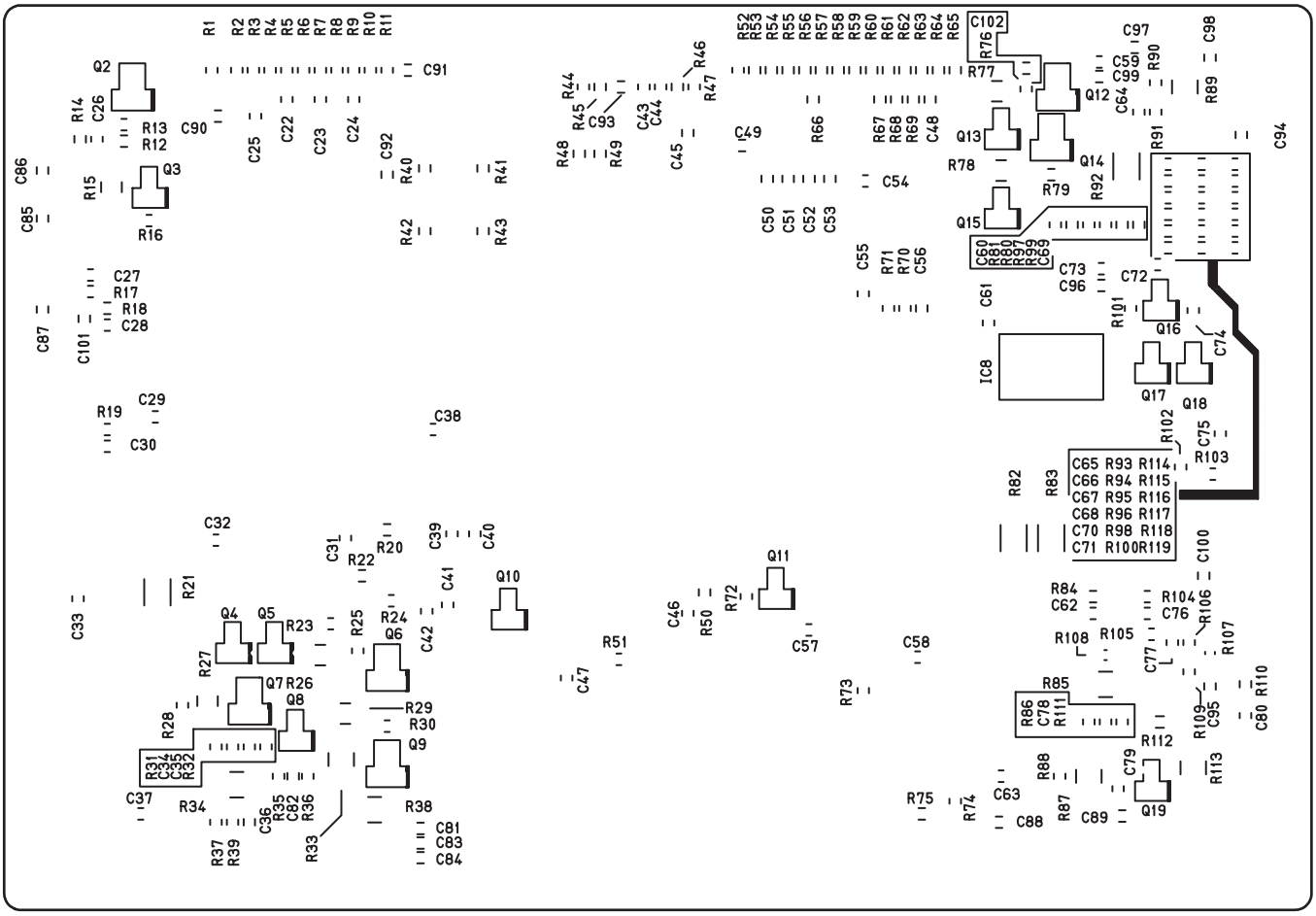
R1 R2 R3 R4 R5 R6 R7 R8 R9 R10 R11
Q2
R14 C26
R13 R12
C90
C91
C25 C22 C23 C24
C92
R40
R41
R42
R43
R44
R45
C93
R46
R47
R48
R49
C43 C44
C45
C49
R52 R53 R54 R55 R56 R57 R58 R59 R60 R61 R62 R63 R64 R65
R66
R67 R68 R69 R48
C102
R76
R77
C97
C5 C99
R90
C98
R89
Q12
C64
Q13
R78
Q14
R79
R92
R91
C94
C86
R15
Q3
R16
C85
C54
Q15
C50 C51 C52 C53
C60 R81 R80 R97 R99 C69
C55
R71 R70 C56
C73 C96
C72
C61
R101
Q16
C74
IC8
Q17
Q18
C27
R17
R18
C28
C87
C101
R19
C29
C30
C38
R102
C75
R103
C65 R93 R114
C66 R94 R115
C67 R95 R116
C68 R96 R117
C70 R98 R118
C71 R100R119
R82
R83
C32
C31
R22
R20
C39
C40
C41
Q10
Q11
C100
R84
C62
R104
C76
R106
R107
C33
R21
Q4
Q5
R23
R25
R24
Q6
C42
C46
R50
R72
C57
C58
R108
R105
C77
R27
R51
C47
Q7
R26
Q8
R29
R30
Q9
R73
R85
R86 C78 R111
R109
C95
C80 R110
R28
R31 C34 C35 R32
C37
R34
C36
R35 C82 R36
R38
R33
C81 C83 C84
R37 R39
R112
R88
C79
R113
R75
R74
C63
C88
R87
C89
Q19

ITEM NO.	PARTS NO.	PARTS NAME	Q'TY / PAGE	Q'TY / PACK	P	I	R	BSI NO.	TO	T	FROM	SERIAL NO.	REMARKS	C
0	41300521000	PWA-F-RLY-AT	1	1/SB					0A					
0A	41300521000	PWA-F-RLY-AT	1	1/SB	-	-	-	G01C317	0A-1		0		DP1600	
0A-1	41300521000	PWA-F-RLY-AT	1	1/SB	-	-	-	G01I704	0C		0A		DP1600	
0B	41300521100	PWA-F-RLY-AT	1	1/SB	A	-	J	G01C317	0B-1				NAD, MJD, AUD, ASD, SAD, TWD DP2000/2500	
0B-1	41300521100	PWA-F-RLY-AT	1	1/SB	-	-	-	G01I704	0D 0B-2		0B		DP2000/2500	
0B-2	41300521700	PWA-F-RLY-AT	1	1/SB	C	B	B	G01J717			0B-1		NAD, MJD, AUD, ASD, SAD, TWD DP2000/2500	
0C	41300521500	PWA-F-PLY-AT	1	1/SB	C	B	D	G01I704			0A		NAD, MJD, AUD, ASD, SAD, TWD DP1608 CND	
0D	41300521600	PWA-F-RLY-AT	1	1/SB	C	B	D	G01I704	0D-1		0B		DP2008/2508 CND	
0D-1	41300521900	PWA-F-RLY-AT	1	1/SB	C	B	B	G01J717			0D		DP2008/2508 CND	
11	3040485827	IC-TCVHCT244FT2 IC1	1	5/S										
12	3040485827	IC-TCVHCT244FT2 IC2	1	5/S										
13	4843116409	IC-SN74LS06NSE2 IC3	1	5/S										
14	3040378538	IC-TA8428K(S) IC4	1	1/S										
15	3040274380	IC-TD62064F IC5	1	5/S										
16	3040487405	IC-TC74LCX08FEL IC6	1	5/S										
17	4849300006	IC-NJM386M(TE3) IC7	1	1/S										
18	3040371005	IC-TA7805F IC8	1	5/S										
31	4843101729	Q-2SC4485T-AN Q1	1	1/P										
32B	3036341976	Q-2SC2873Y(TE12 Q2	1	10/P	A	-	J	G01C317					DP2000/2500	
33B	4843101717	Q-DTC114EKAT146 Q3	1	1/P	A	-	J	G01C317					DP2000/2500	
34	4843101717	Q-DTC114EKAT146 Q4	1	1/P										
35	4843101717	Q-DTC114EKAT146 Q5	1	1/P										
36	4843304923	J-173981-8 Q6	1	5/P										
37	4843304923	J-173981-8 Q7	1	5/P										
40	4843101720	Q-DTA114EKAT146 Q10	1	1/P										
42	4843304923	J-173981-8 Q12	1	5/P										
43	4843101717	Q-DTC114EKAT146 Q13	1	1/P										
46	3036004131	Q-RN1422(TE85L) Q16	1	5/P										
47	4843101717	Q-DTC114EKAT146 Q17	1	1/P										
48	4843101717	Q-DTC114EKAT146 Q18	1	1/P										
49	4843304923	J-173981-8 Q19	1	5/P										
61	4849300073	CE-04WQ1H226MF C1	1	5/P										
62	4849300068	CE-04WQ1E226MF C2	1	5/P										
63	4849300068	CE-04WQ1E226MF C3	1	5/P										
64	4849300068	CE-04WQ1E226MF C4	1	5/P										
65	4849300070	CE-04WQ1V475MF C5	1	5/P										
66	4849300064	CE-04WQ1C106MF C6	1	5/P										

ITEM NO.	PARTS NO.	PARTS NAME	Q'TY / PAGE	Q'TY / PACK	P	I	R	BSI NO.	TO	T	FROM	SERIAL NO.	REMARKS	C
67	4849300073	CE-04WQ1H226MF C7	1	5/P										
68	4849300073	CE-04WQ1H226MF C8	1	5/P										
69	4843413736	CE-04WG1H106MB C9	1	10/P										
70	4849300069	CE-04WQ1E476MF C10	1	5/P										
71	4849300069	CE-04WQ1E476MF C11	1	5/P										
72	4849300069	CE-04WQ1E476MF C12	1	5/P										
73	4849300069	CE-04WQ1E476MF C13	1	5/P										
74	4849300073	CE-04WQ1H226MF C14	1	5/P										
75	4849300064	CE-04WQ1C106MF C15	1	5/P										
76	4849300068	CE-04WQ1E226MF C16	1	5/P										
77	4849300073	CE-04WQ1H226MF C17	1	5/P										
78	4849300063	CE-04WQ1A107MF C18	1	5/P										
79	4849300063	CE-04WQ1A107MF C19	1	5/P										
80	4849300071	CE-04WQ1V107MF C20	1	5/P										
81	4849300071	CE-04WQ1V107MF C21	1	5/P										
82	4843413167	CTP-MOF1E104ZT C22	1	10/P										
83	4843413167	CTP-MOF1E104ZT C23	1	10/P										
84	4843413167	CTP-MOF1E104ZT C24	1	10/P										
85	4843413167	CTP-MOF1E104ZT C25	1	10/P										
86	4843413167	CTP-MOF1E104ZT C26	1	10/P										
87	4843413167	CTP-MOF1E104ZT C27	1	10/P										
88	4843413317	CTP-CZCH1H101JT C28	1	10/P										
89	4843413317	CTP-CZCH1H101JT C29	1	10/P										
90	4843412016	CTP-MOF1H473ZT C30	1	10/P										
91	4843413167	CTP-MOF1E104ZT C31	1	10/P										
92	4843411997	CTP-MOB1H102KT C32	1	10/P										
93	4843411997	CTP-MOB1H102KT C33	1	10/P										
94	4843413167	CTP-MOF1E104ZT C34	1	10/P										
95	4843413167	CTP-MOF1E104ZT C35	1	10/P										
96	4843413317	CTP-CZCH1H101JT C36	1	10/P										
97	4843413167	CTP-MOF1E104ZT C37	1	10/P										
98	4843413167	CTP-MOF1E104ZT C38	1	10/P										
99	4843413167	CTP-MOF1E104ZT C39	1	10/P										
100	4843413167	CTP-MOF1E104ZT C40	1	10/P										
101	4843413167	CTP-MOF1E104ZT C41	1	10/P										

ITEM NO.	PARTS NO.	PARTS NAME	Q'TY / PAGE	Q'TY / PACK	P	I	R	BSI NO.	TO	T	FROM	SERIAL NO.	REMARKS	C
102	4843413167	CTP-MOF1E104ZT	1	10/P										
		C42												
103	4843413317	CTP-CZCH1H101JT	1	10/P										
		C43												
104	4843413317	CTP-CZCH1H101JT	1	10/P										
		C44												
105	4843412016	CTP-MOF1H473ZT	1	10/P										
		C45												
106	4843413167	CTP-MOF1E104ZT	1	10/P										
		C46												
107	4843413167	CTP-MOF1E104ZT	1	10/P										
		C47												
108	4843413199	CTP-MOCH1H100DT	1	10/P										
		C48												
109	4843413167	CTP-MOF1E104ZT	1	10/P										
		C49												
110	4843413199	CTP-MOCH1H100DT	1	10/P										
		C50												
111	4843413199	CTP-MOCH1H100DT	1	10/P										
		C51												
112	4843413199	CTP-MOCH1H100DT	1	10/P										
		C52												
113	4843413199	CTP-MOCH1H100DT	1	10/P										
		C53												
114	4843413167	CTP-MOF1E104ZT	1	10/P										
		C54												
115	4843413167	CTP-MOF1E104ZT	1	10/P										
		C55												
116	4843413317	CTP-CZCH1H101JT	1	10/P										
		C56												
118	4843412016	CTP-MOF1H473ZT	1	10/P										
		C58												
119	4843413167	CTP-MOF1E104ZT	1	10/P										
		C59												
120	4843411997	CTP-MOB1H102KT	1	10/P										
		C60												
121	4843412016	CTP-MOF1H473ZT	1	10/P										
		C61												
122	4843413167	CTP-MOF1E104ZT	1	10/P										
		C62												
123	4843412016	CTP-MOF1H473ZT	1	10/P										
		C63												
124	4843413167	CTP-MOF1E104ZT	1	10/P										
		C64												
125	4843413317	CTP-CZCH1H101JT	1	10/P										
		C65												
126	4843413317	CTP-CZCH1H101JT	1	10/P										
		C66												
127	4843413317	CTP-CZCH1H101JT	1	10/P										
		C67												
128	4843413317	CTP-CZCH1H101JT	1	10/P										
		C68												
129	4843413317	CTP-CZCH1H101JT	1	10/P										
		C69												
130	4843413317	CTP-CZCH1H101JT	1	10/P										
		C70												
131	4843413317	CTP-CZCH1H101JT	1	10/P										
		C71												
132	4843413167	CTP-MOF1E104ZT	1	10/P										
		C72												
133	4843413167	CTP-MOF1E104ZT	1	10/P										
		C73												
134	4843413317	CTP-CZCH1H101JT	1	10/P										
		C74												
135	4843413167	CTP-MOF1E104ZT	1	10/P										
		C75												
136	4843413167	CTP-MOF1E104ZT	1	10/P										
		C76												
137	4843412009	CTP-MOB1H103KT	1	10/P										
		C77												

ITEM NO.	PARTS NO.	PARTS NAME	Q'TY / PAGE	Q'TY / PACK	P	I	R	BSI NO.	TO	T	FROM	SERIAL NO.	REMARKS	C
138	4843412009	CTP-MOB1H103KT C78	1	10/P										
139	4843412009	CTP-MOB1H103KT C79	1	10/P										
140	4843413167	CTP-MOF1E104ZT C80	1	10/P										
141	4843413321	CTP-CZCH1H221JT C81	1	10/P										
142	4843413321	CTP-CZCH1H221JT C82	1	10/P										
143	4843413321	CTP-CZCH1H221JT C83	1	10/P										
144	4843413321	CTP-CZCH1H221JT C84	1	10/P										
145	4843413321	CTP-CZCH1H221JT C85	1	10/P										
146	4843413321	CTP-CZCH1H221JT C86	1	10/P										
147	4843413321	CTP-CZCH1H221JT C87	1	10/P										
148	4843412016	CTP-MOF1H473ZT C88	1	10/P										
149	4843412016	CTP-MOF1H473ZT C89	1	10/P										
150	4843413167	CTP-MOF1E104ZT C90	1	10/P										
151	4843412016	CTP-MOF1H473ZT C91	1	10/P										
152	4843412016	CTP-MOF1H473ZT C92	1	10/P										
153	4843413167	CTP-MOF1E104ZT C93	1	10/P										
154	4843413167	CTP-MOF1E104ZT C94	1	10/P										
155	4843413167	CTP-MOF1E104ZT C95	1	10/P										
156	4843413167	CTP-MOF1E104ZT C96	1	10/P										
157	4843413321	CTP-CZCH1H221JT C97	1	10/P										
158	4843413321	CTP-CZCH1H221JT C98	1	10/P										
159	4843413167	CTP-MOF1E104ZT C99	1	10/P										
160	4843412016	CTP-MOF1H473ZT C100	1	10/P										
161	4843413321	CTP-CZCH1H221JT C101	1	10/P										
162	4843412016	CTP-MOF1H473ZT C102	1	10/P										
181	4843077282	RTP-4J2A103JDT R1	1	10/P										
182	4843077282	RTP-4J2A103JDT R2	1	10/P										
183	4843077282	RTP-4J2A103JDT R3	1	10/P										
184	4843077282	RTP-4J2A103JDT R4	1	10/P										
185	4843077342	RTP-4J2A101JDT R5	1	10/P										
186	4843077282	RTP-4J2A103JDT R6	1	10/P										
187	4843077342	RTP-4J2A101JDT R7	1	10/P										
188	4843077282	RTP-4J2A103JDT R8	1	10/P										
189	4843077342	RTP-4J2A101JDT R9	1	10/P										
190	4843077282	RTP-4J2A103JDT R10	1	10/P										

ITEM NO.	PARTS NO.	PARTS NAME	Q'TY / PAGE	Q'TY / PACK	P	I	R	BSI NO.	TO	T	FROM	SERIAL NO.	REMARKS	C
191	4843077282	RTP-4J2A103JDT R11	1	10/P										
192B	4843077282	RTP-4J2A103JDT R12	1	10/P	A	-	J	G01C317	192B-1				DP2000/2500	
192B-1	4843077322	RTP-4J2A102JDT R12	1	10/P	C	B	B	G01J717			192B		DP2000/2500	
193B	4843077348	RTP-4J2A472JDT R13	1	10/P	A	-	J	G01C317	193B-1				DP2000/2500	
193B-1	4843077282	RTP-4J2A103JDT R13	1	10/P	C	B	B	G01J717			193B		DP2000/2500	
194	4843077408	RTP-4J2A473JDT R14	1	10/P										
195B	4843074214	RTP-5B2E471JDT R15	1	10/P	A	-	J	G01C317					DP2000/2500	
196B	4843077282	RTP-4J2A103JDT R16	1	10/P	A	-	J	G01C317					DP2000/2500	
197	4843077282	RTP-4J2A103JDT R17	1	10/P										
198	4843077342	RTP-4J2A101JDT R18	1	10/P										
199	4843077929	RTP-4J2A10ROFDT R19	1	10/P										
200	4843077282	RTP-4J2A103JDT R20	1	10/P										
201	4843077927	RTP-7J3A470JDT R21	1	10/P										
202	4843077282	RTP-4J2A103JDT R22	1	10/P										
203	4843077348	RTP-4J2A472JDT R23	1	10/P										
204	4843077282	RTP-4J2A103JDT R24	1	10/P										
205	4843077282	RTP-4J2A103JDT R25	1	10/P										
206	4843074174	RTP-5B2E472JDT R26	1	10/P										
207	4843074174	RTP-5B2E472JDT R27	1	10/P										
208	4843077282	RTP-4J2A103JDT R28	1	10/P										
211	4843077342	RTP-4J2A101JDT R31	1	10/P										
212	4843077342	RTP-4J2A101JDT R32	1	10/P										
213	4843077940	RTP-6J2H220JDT R33	1	10/P										
214	4843077940	RTP-6J2H220JDT R34	1	10/P										
215	4843077350	RTP-4J2A105JDT R35	1	10/P										
216	4843077350	RTP-4J2A105JDT R36	1	10/P										
217	4843077282	RTP-4J2A103JDT R37	1	10/P										
218	4843077938	RTP-6Z2H000JDT R38	1	10/P										
219	4843077342	RTP-4J2A101JDT R39	1	10/P										
220	4843077282	RTP-4J2A103JDT R40	1	10/P										
221	4843077282	RTP-4J2A103JDT R41	1	10/P										
222	4843077282	RTP-4J2A103JDT R42	1	10/P										
223	4843077282	RTP-4J2A103JDT R43	1	10/P										
224	4843077282	RTP-4J2A103JDT R44	1	10/P										
225	4843077342	RTP-4J2A101JDT R45	1	10/P										

ITEM NO.	PARTS NO.	PARTS NAME	Q'TY / PAGE	Q'TY / PACK	P	I	R	BSI NO.	TO	T	FROM	SERIAL NO.	REMARKS	C
226	4843077342	RTP-4J2A101JDT R46	1	10/P										
227	4843077282	RTP-4J2A103JDT R47	1	10/P										
228	4843077282	RTP-4J2A103JDT R48	1	10/P										
229	4843077282	RTP-4J2A103JDT R49	1	10/P										
230	4843077282	RTP-4J2A103JDT R50	1	10/P										
231	4843077933	RTP-4J2A912JDT R51	1	10/P										
232	4843077282	RTP-4J2A103JDT R52	1	10/P										
233	4843077846	RTP-4J2A330JDT R53	1	10/P										
234	4843077846	RTP-4J2A330JDT R54	1	10/P										
235	4843077846	RTP-4J2A330JDT R55	1	10/P										
236	4843077282	RTP-4J2A103JDT R56	1	10/P										
237	4843077846	RTP-4J2A330JDT R57	1	10/P										
238	4843077846	RTP-4J2A330JDT R58	1	10/P										
239	4843077846	RTP-4J2A330JDT R59	1	10/P										
240	4843077282	RTP-4J2A103JDT R60	1	10/P										
241	4843077282	RTP-4J2A103JDT R61	1	10/P										
242	4843077282	RTP-4J2A103JDT R62	1	10/P										
243	4843077846	RTP-4J2A330JDT R63	1	10/P										
244	4843077846	RTP-4J2A330JDT R64	1	10/P										
245	4843077846	RTP-4J2A330JDT R65	1	10/P										
246	4843077846	RTP-4J2A330JDT R66	1	10/P										
247	4843077846	RTP-4J2A330JDT R67	1	10/P										
248	4843077846	RTP-4J2A330JDT R68	1	10/P										
249	4843077846	RTP-4J2A330JDT R69	1	10/P										
250	4843077342	RTP-4J2A101JDT R70	1	10/P										
251	4843077282	RTP-4J2A103JDT R71	1	10/P										
253	4843077408	RTP-4J2A473JDT R73	1	10/P										
254	4843077348	RTP-4J2A472JDT R74	1	10/P										
255	4843076858	RTP-4N1JR50JDT R75	1	10/P										
256	4843077282	RTP-4J2A103JDT R76	1	10/P										
257	4843074174	RTP-5B2E472JDT R77	1	10/P										
260	4843077282	RTP-4J2A103JDT R80	1	10/P										
261	4843077342	RTP-4J2A101JDT R81	1	10/P										
262	4843077488	RTP-7M3A100JDT R82	1	10/P										
263	4843077488	RTP-7M3A100JDT R83	1	10/P										

ITEM NO.	PARTS NO.	PARTS NAME	Q'TY / PAGE	Q'TY / PACK	P	I	R	BSI NO.	TO	T	FROM	SERIAL NO.	REMARKS	C
264	4843077342	RTP-4J2A101JDT	1	10/P										
		R84												
265	4843077939	RTP-6Z2H1R0JDT	1	10/P										
		R85												
266	4843077342	RTP-4J2A101JDT	1	10/P										
		R86												
267	4843077941	RTP-6J2H620JDT	1	10/P										
		R87												
268	4843077342	RTP-4J2A101JDT	1	10/P										
		R88												
269	4843077940	RTP-6J2H220JDT	1	10/P										
		R89												
270	4843077350	RTP-4J2A105JDT	1	10/P										
		R90												
271	4843077342	RTP-4J2A101JDT	1	10/P										
		R91												
273	4843077342	RTP-4J2A101JDT	1	10/P										
		R93												
274	4843077342	RTP-4J2A101JDT	1	10/P										
		R94												
275	4843077342	RTP-4J2A101JDT	1	10/P										
		R95												
276	4843077342	RTP-4J2A101JDT	1	10/P										
		R96												
277	4843077282	RTP-4J2A103JDT	1	10/P										
		R97												
278	4843077342	RTP-4J2A101JDT	1	10/P										
		R98												
279	4843077342	RTP-4J2A101JDT	1	10/P										
		R99												
280	4843077342	RTP-4J2A101JDT	1	10/P										
		R100												
281	4843077408	RTP-4J2A473JDT	1	10/P										
		R101												
282	4843077282	RTP-4J2A103JDT	1	10/P										
		R102												
283	4843077282	RTP-4J2A103JDT	1	10/P										
		R103												
284	4843077282	RTP-4J2A103JDT	1	10/P										
		R104												
285	4843077342	RTP-4J2A101JDT	1	10/P										
		R105												
286	4843076858	RTP-4N1JR50JDT	1	10/P										
		R106												
287	4843077913	RTP-2H2B1202FDT	1	10/P										
		R107												
288	4843073739	RTP-2J2B471JDT	1	10/P										
		R108												
289	4843077282	RTP-4J2A103JDT	1	10/P										
		R109												
290	4843076858	RTP-4N1JR50JDT	1	10/P										
		R110												
291	4843077322	RTP-4J2A102JDT	1	10/P										
		R111												
292	4843076312	RTP-3B2B103JD	1	10/P										
		R112												
293	4843077944	RTP-6J2H181JDT	1	10/P										
		R113												
294	4843077282	RTP-4J2A103JDT	1	10/P										
		R114												
295	4843077282	RTP-4J2A103JDT	1	10/P										
		R115												
296	4843077282	RTP-4J2A103JDT	1	10/P										
		R116												
297	4843077282	RTP-4J2A103JDT	1	10/P										
		R117												
298	4843077282	RTP-4J2A103JDT	1	10/P										
		R118												
299	4843077282	RTP-4J2A103JDT	1	10/P										
		R119												

ITEM NO.	PARTS NO.	PARTS NAME	Q'TY / PAGE	Q'TY / PACK	P	I	R	BSI NO.	TO	T	FROM	SERIAL NO.	REMARKS	C
312	3037568554	D-1S1885A(TPA1)	1	5/P										
		D2												
314	3037568554	D-1S1885A(TPA1)	1	5/P										
		D4												
315B	3037568554	D-1S1885A(TPA1)	1	5/P	A	-	J	G01C317					DP2000/2500	
		D5												
322	4843101735	D-RD4.7FB1-T7	1	1/P										
		ZD2												
331	4843075359	RZ-RXE025	1	1/P					331A					
		F1												
331A	4843075359	RZ-RXE025	1	1/P	-	-	-	G01C317			331		DP1600	
		F1												
331B	4843075357	RZ-RXE017	1	1/P	A	-	J	G01C317					DP2000/2500	
		F1												
351	4843309884	J-DHBRD100S13N4	1	1/P										
		CN21												
352	4843309899	J-5569-18A1	1	1/P					352A					
		CN22												
352A	4843309899	J-5569-18A1	1	1/P	-	-	-	G01C317			352		DP1600	
		CN22												
353	4843309900	J-5569-20A1	1	1/P					353-1					
		CN23												
353-1	4843309900	J-5569-20A1	0	1/P	B	-	J	G01B232			353			
		CN23												
353B	4843309900	J-5569-20A1	1	1/P	A	-	J	G01C317					DP2000/2500	
		CN23												
354	4843306518	J-53254-1010	1	5/P										
		CN24												
356	4843304370	J-173979-05	1	5/P										
		CN26												
357	4843309893	J-53254-0410	1	1/P										
		CN27												
358	4843304943	J-53052-0510	1	5/P										
		CN28												
359	4843304921	J-173981-6	1	5/P					359A					
		CN29												
359A	4843304921	J-173981-6	1	5/P	-	-	-	G01C317			359		DP1600	
		CN29												
360B	4843304923	J-173981-8	1	5/P	A	-	J	G01C317					DP2000/2500	
		CN30												
361	4843308001	J-53324-1210	1	5/P										
		CN31												
362	4843304917	J-173981-2	1	5/P										
		CN32												
363	4843304919	J-173981-4	1	5/P										
		CN33												
364	4843304836	J-53014-0210	1	5/P										
		CN34												
365	4843304942	J-53052-0610	1	5/P										
		CN35												
366	4843308003	J-53324-1410	1	5/P										
		CN36												
367	4843307778	J-53313-1215	1	5/P										
		CN37												
368	4843304918	J-173981-3	1	5/P										
		CN38												
369	4843307992	J-53324-0310	1	5/P										
		CN39												
371	4843309933	J-1-173981-5	1	1/P										
		CN41												
372B	4843304945	J-53052-0310	1	5/P	A	-	J	G01C317					DP2000/2500	
		CN42												
374	4843308009	J-53325-0610	1	10/P										
		CN44												
375	4843304368	J-173979-03	1	5/P										
		CN45												
377	4843306175	J-S2B-PH-K-S	1	5/P										
		CN47												
378B	4843309889	J-53426-0410	1	1/P	A	-	J	G01C317					DP2000/2500	
		CN48												

ITEM NO.	PARTS NO.	PARTS NAME	Q'TY / PAGE	Q'TY / PACK	P	I	R	BSI NO.	TO	T	FROM	SERIAL NO.	REMARKS	C
379	4843309890	J-53259-0410 CN49	1	1/P										
380	4843305047	J-53015-0410 CN50	1	5/P										
382	4843309934	J-6-173979-2 CN52	1	1/P										
383	4843306510	J-53254-0210 CN53	1	5/P										
384	4843309892	J-53254-0310 CN54	1	1/P										

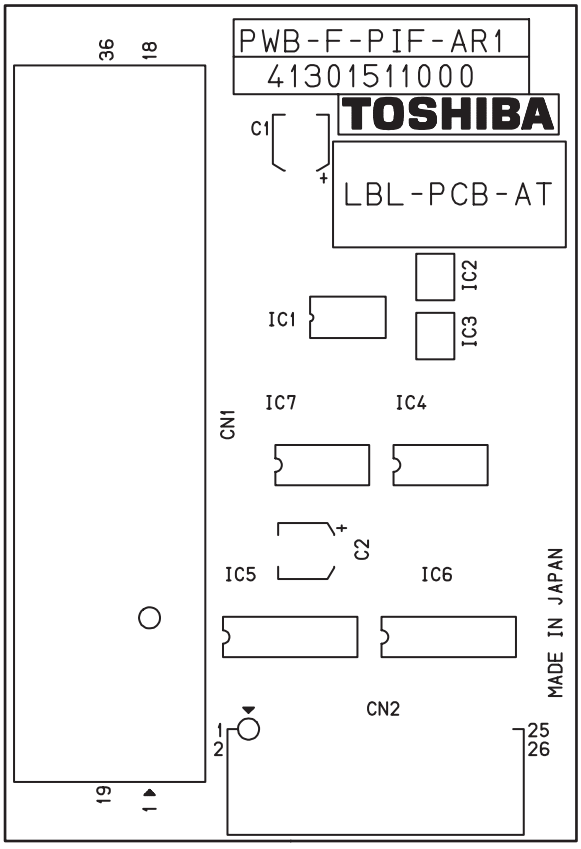
PWB-F-PIF-AR1
41301511000
TOSHIBA
LBL-PCB-AT
C1
IC1
IC2
IC3
IC4
IC5
IC6
IC7
CN1
CN2
C2
MADE IN JAPAN
36
18
19
1
2
25
26

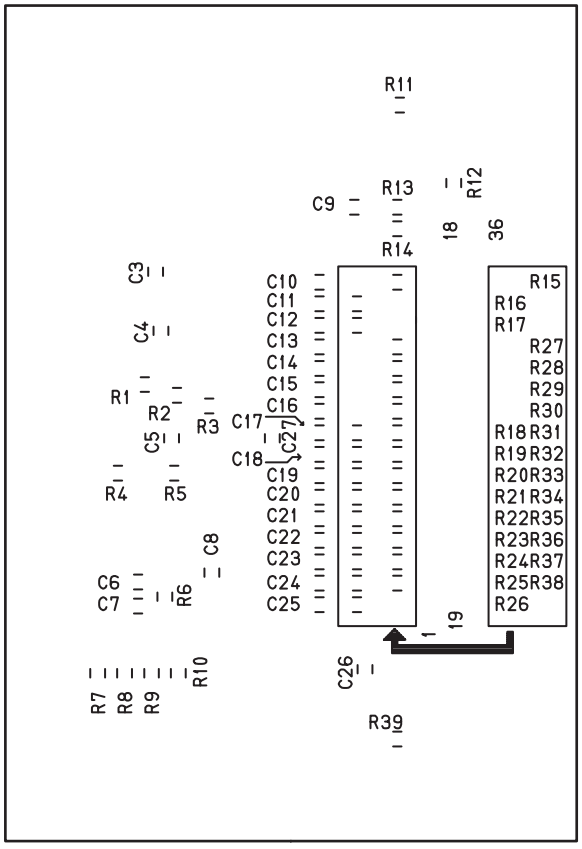
R11
R12
R13
R14
R15
R16
R17
R18
R19
R20
R21
R22
R23
R24
R25
R26
R27
R28
R29
R30
R31
R32
R33
R34
R35
R36
R37
R38
R39
C9
C10
C11
C12
C13
C14
C15
C16
C17
C18
C19
C20
C21
C22
C23
C24
C25
C26
C27
C3
C4
C5
C6
C7
C8
R1
R2
R3
R4
R5
R6
R7
R8
R9
R10
18
36
19
1

ITEM NO.	PARTS NO.	PARTS NAME	Q'TY / PAGE	Q'TY / PACK	P	I	R	BSI NO.	TO	T	FROM	SERIAL NO.	REMARKS	C
0	41300512000	PWA-F-PIF-AR1	1	1/SB										
11	4849300030	IC-74ACT1284MSA IC1	1	1/S										
12	3036030631	IC-TC7S08FTE85R IC2	1	5/S										
13	3036030620	IC-TC7S04F IC3	1	5/S										
17	3040488275	IC-TC74HC00AFTP IC7	1	5/S										
31	4843414088	CTP-EHHG1A227MT C1	1	10/P										
32	4843414088	CTP-EHHG1A227MT C2	1	10/P										
33	4843413167	CTP-MOF1E104ZT C3	1	10/P										
34	4843413167	CTP-MOF1E104ZT C4	1	10/P										
35	4843413167	CTP-MOF1E104ZT C5	1	10/P										
38	4843413167	CTP-MOF1E104ZT C8	1	10/P										
39	4843413321	CTP-CZCH1H221JT C9	1	10/P										
40	4843411997	CTP-MOB1H102KT C10	1	10/P										
41	4843413321	CTP-CZCH1H221JT C11	1	10/P										
42	4843413321	CTP-CZCH1H221JT C12	1	10/P										
43	4843413321	CTP-CZCH1H221JT C13	1	10/P										
44	4843413321	CTP-CZCH1H221JT C14	1	10/P										
45	4843413321	CTP-CZCH1H221JT C15	1	10/P										
46	4843413321	CTP-CZCH1H221JT C16	1	10/P										
47	4843413321	CTP-CZCH1H221JT C17	1	10/P										
48	4843413321	CTP-CZCH1H221JT C18	1	10/P										
49	4843413321	CTP-CZCH1H221JT C19	1	10/P										
50	4843413321	CTP-CZCH1H221JT C20	1	10/P										
51	4843413321	CTP-CZCH1H221JT C21	1	10/P										
52	4843413321	CTP-CZCH1H221JT C22	1	10/P										
53	4843413321	CTP-CZCH1H221JT C23	1	10/P										
54	4843413321	CTP-CZCH1H221JT C24	1	10/P										
55	4843413321	CTP-CZCH1H221JT C25	1	10/P										
56	4843413167	CTP-MOF1E104ZT C26	1	10/P										
57	4843413167	CTP-MOF1E104ZT C27	1	10/P										
81	4843076866	RTP-4J1J391JDT R1	1	10/P										
82	4843076866	RTP-4J1J391JDT R2	1	10/P										
83	4843076866	RTP-4J1J391JDT R3	1	10/P										
84	4843076866	RTP-4J1J391JDT R4	1	10/P										
85	4843076866	RTP-4J1J391JDT R5	1	10/P										
86	4843077342	RTP-4J2A101JDT	1	10/P										

ITEM NO.	PARTS NO.	PARTS NAME	Q'TY / PAGE	Q'TY / PACK	P	I	R	BSI NO.	TO	T	FROM	SERIAL NO.	REMARKS	C
		R6												
87	4843077322	RTP-4J2A102JDT	1	10/P										
		R7												
88	4843077322	RTP-4J2A102JDT	1	10/P										
		R8												
89	4843077322	RTP-4J2A102JDT	1	10/P										
		R9												
90	4843077322	RTP-4J2A102JDT	1	10/P										
		R10												
91	4843076858	RTP-4N1JR50JDT	1	10/P										
		R11												
92	4843076858	RTP-4N1JR50JDT	1	10/P										
		R12												
93	4843077840	RTP-4J2A100JDT	1	10/P										
		R13												
94	4843077408	RTP-4J2A473JDT	1	10/P										
		R14												
95	4843077322	RTP-4J2A102JDT	1	10/P										
		R15												
96	4843077840	RTP-4J2A100JDT	1	10/P										
		R16												
97	4843077840	RTP-4J2A100JDT	1	10/P										
		R17												
98	4843077342	RTP-4J2A101JDT	1	10/P										
		R18												
99	4843077342	RTP-4J2A101JDT	1	10/P										
		R19												
100	4843077342	RTP-4J2A101JDT	1	10/P										
		R20												
101	4843077342	RTP-4J2A101JDT	1	10/P										
		R21												
102	4843077342	RTP-4J2A101JDT	1	10/P										
		R22												
103	4843077342	RTP-4J2A101JDT	1	10/P										
		R23												
104	4843077342	RTP-4J2A101JDT	1	10/P										
		R24												
105	4843077342	RTP-4J2A101JDT	1	10/P										
		R25												
106	4843077840	RTP-4J2A100JDT	1	10/P										
		R26												
107	4843077408	RTP-4J2A473JDT	1	10/P										
		R27												
108	4843077408	RTP-4J2A473JDT	1	10/P										
		R28												
109	4843077408	RTP-4J2A473JDT	1	10/P										
		R29												
110	4843077408	RTP-4J2A473JDT	1	10/P										
		R30												
111	4843077282	RTP-4J2A103JDT	1	10/P										
		R31												
112	4843077282	RTP-4J2A103JDT	1	10/P										
		R32												
113	4843077282	RTP-4J2A103JDT	1	10/P										
		R33												
114	4843077282	RTP-4J2A103JDT	1	10/P										
		R34												
115	4843077282	RTP-4J2A103JDT	1	10/P										
		R35												
116	4843077282	RTP-4J2A103JDT	1	10/P										
		R36												
117	4843077282	RTP-4J2A103JDT	1	10/P										
		R37												
118	4843077282	RTP-4J2A103JDT	1	10/P										
		R38												
119	4843076858	RTP-4N1JR50JDT	1	10/P										
		R39												
131	4843309932	J-57R403607329B	1	1/P										
		CN1												

ITEM NO.	PARTS NO.	PARTS NAME	Q'TY / PAGE	Q'TY / PACK	P	I	R	BSI NO.	TO	T	FROM	SERIAL NO.	REMARKS	C
132	4843309960	J-S26B-PHDSS CN2	1	1/P										

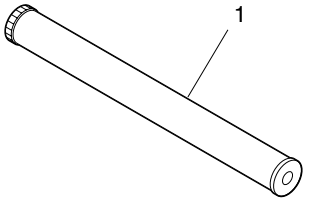
1

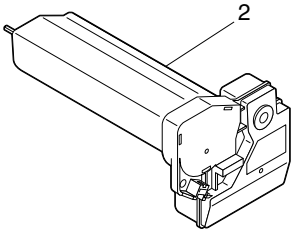
2

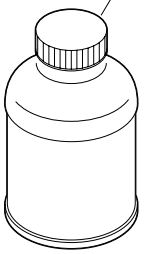
3

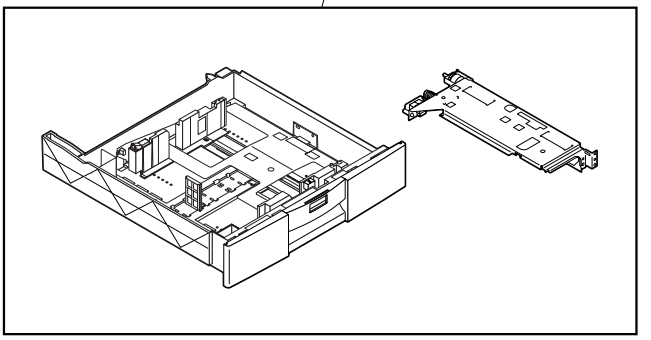
4

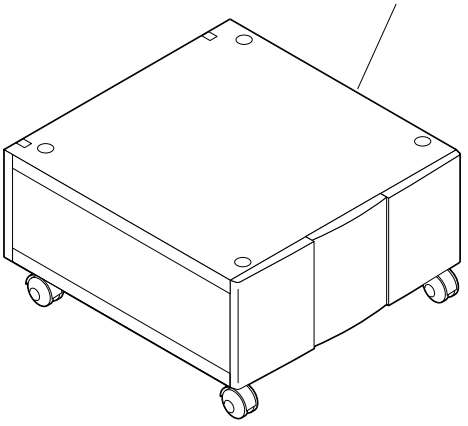
5

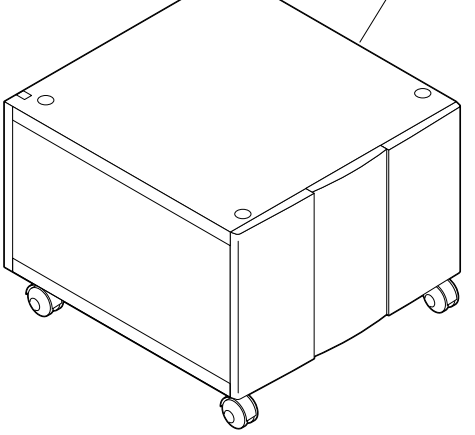
6

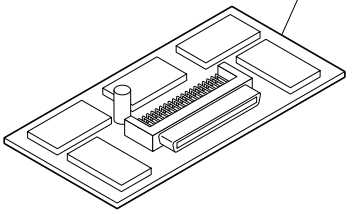
7

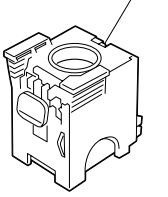
8

ITEM NO.	PARTS NO.	PARTS NAME	Q'TY / PAGE	Q'TY / PACK	P	I	R	BSI NO.	TO	T	FROM	SERIAL NO.	REMARKS	C
1	41303611000	OD-1600	1	1/S	A	-	J	G01K784					DP1600S/2000S/2500S(NAD, MJD, AUD, ASD, SAD, TWD	DRM
2A	66061613	PS-ZT1600	1	SUPPLY	A	-	J	G01K784					DP1600 (NAD)	
2B	66061614	PS-ZT1600E	1	SUPPLY	A	-	J	G01K784					DP1600 (MJD)	
2C	66061615	PS-ZT1600D	1	SUPPLY	A	-	J	G01K784					DP1600 (ASD, AUD, TWD, SAD)	
2D	66061616	PS-ZT1600C	1	SUPPLY	A	-	J	G01K784					DP1600 (CND)	
2E	66061617	PS-ZT2500	1	SUPPLY	A	-	J	G01K784					DP2000/2500 (NAD)	
2F	66061618	PS-ZT2500E	1	SUPPLY	A	-	J	G01K784					DP2000/2500 (MJD)	
2G	66061619	PS-ZT2500D	1	SUPPLY	A	-	J	G01K784					DP2000/2500 (ASD, AUD, TWD, SAD)	
2H	66061620	PS-ZT2500C	1	SUPPLY	A	-	J	G01K784					DP2000/2500 (CND)	
3	41303712000	D-1600	1	1/S	A	-	J	G01K784					DP1600S/2000S/2500S(NAD, MJD, AUD, ASD, SAD, TWD)	DEV
4A	66099416	MY-1017	1	SUPPLY	A	-	J	G01K784					NAD, MJD, AUD	
4B	66099417	MY-1017-N	1	SUPPLY	A	-	J	G01K784					ASD, SAD, TWD	
4C	66099488	MY-1017-C	1	SUPPLY	A	-	J	G01K784					CND	
5	66099481	MH-1600L	1	SUPPLY	A	-	J	G01K784						
6	66099482	MH-1600H	1	SUPPLY	A	-	J	G01K784						
7A	66099443	GC-1050	1	SUPPLY	A	-	J	G01K784					NAD, MJD, AUD	
7B	66099468	GC-1050-N	1	SUPPLY	A	-	J	G01K784					ASD, SAD, TWD	
7C	66099493	GC-1050-C	1	SUPPLY	A	-	J	G01K784					CND	
8	66089599	STAPLE-1600	1	SUPPLY	A	-	J	G01K784						

PARTS NO.	PARTS NAME	Q'TY / PAGE	Q'TY / PACK	PAGE	ITEM NO.	P	I	R	BSI NO.	SERIAL NO.	REMARKS	LOCATION	C
3036004131	Q-RN1422(TE85L)	1	5/P	53	46							Q16	
3036030600	IC-TC7S00F	1	5/S	51	99							IC89	
3036030620	IC-TC7S04F	1	5/S	51	12							IC2	
		1	5/S	51	53							IC43	
		1	5/S	51	70							IC60	
		1	5/S	51	73							IC63	
		1	5/S	51	80							IC70	
		1	5/S	51	81							IC71	
		1	5/S	51	100							IC90	
		1	5/S	54	13							IC3	
3036030631	IC-TC7S08FTE85R	1	5/S	51	24							IC14	
		1	5/S	51	51							IC41	
		1	5/S	51	72							IC62	
		1	5/S	54	12							IC2	
3036030641	IC-TC7S32FTE85R	1	5/S	51	40							IC30	
		1	5/S	51	40A	-	-	-	G01C317		DP1600	IC30	
		1	5/S	51	101							IC91	
3036031218	IC-TC7SZ08FTE85	1	5/S	51	45							IC35	
3036031222	IC-TC7SZ32FTE85	1	5/S	51	66							IC56	
		1	5/S	51	82							IC72	
3036031224	IC-TC7SZ04FTE85	1	5/S	51	43							IC33	
3036341976	Q-2SC2873Y(TE12	1	10/P	53	32B	A	-	J	G01C317		DP2000/2500	Q2	
3036543615	Q-2SA1213Y(TE12	1	5/P	51	132							Q2	
3037150952	D-1SS190(TE85L)	1	5/P	51	651							D1	
		1	5/P	51	654							D4	
3037153902	D-1SS294(TE85R)	1	5/P	51	652							D2	
		1	5/P	51	653							D3	
		1	5/P	51	656							D6	
		1	5/P	51	657							D7	
3037154602	D-1SS319(TE85R)	1	5/P	51	655							D5	
3037238212	D-02CZ3.3X-85R	1	5/P	52	651							ZD1	
3037568554	D-1S1885A(TPA1)	1	5/P	53	312							D2	
		1	5/P	53	314							D4	
		1	5/P	53	315B	A	-	J	G01C317		DP2000/2500	D5	
3038646531	SCO-TLP1241(C5)	2	1/D	4	23								
3040274380	IC-TD62064F	1	5/S	53	15							IC5	
3040371005	IC-TA7805F	1	5/S	53	18							IC8	
3040378538	IC-TA8428K(S)	1	1/S	53	14							IC4	
3040451907	IC-TC35095AFTP1	1	5/S	51	33							IC23	
3040469011	IC-TC74LCX374FL	1	5/S	51	104							IC94	
3040469017	IC-TC74LCX245FL	1	1/S	51	92							IC82	
3040470124	IC-TC4051BF(ELN	1	5/S	51	15							IC5	
3040470161	IC-TC4053BF	1	5/S	51	14							IC4	
3040485091	IC-TC74LVXC3245	1	5/S	51	54							IC44	
		1	5/S	51	55							IC45	
3040485648	IC-TC74HC32AFTP	1	5/S	51	69							IC59	
3040485666	IC-TC74VHC245FE	1	5/S	51	26							IC16	
3040485827	IC-TCVHCT244FT2	1	5/S	51	67							IC57	
		1	5/S	51	79							IC69	
		1	5/S	51	83							IC73	
		1	5/S	53	11							IC1	
		1	5/S	53	12							IC2	
3040486831	IC-TC74LCX02F(E	1	5/S	51	58							IC48	
3040487032	IC-TC74LCX14FEL	1	5/S	51	36							IC26	
		1	5/S	51	88							IC78	
3040487399	IC-TC74LCX04F(E	1	5/S	51	75							IC65	
3040487405	IC-TC74LCX08FEL	1	5/S	53	16							IC6	
3040487413	IC-TC74LCX32FEL	1	5/S	51	48							IC38	
		1	5/S	51	102							IC92	
3040488061	IC-TC74HC541ATP	1	5/S	51	31							IC21	
3040488182	IC-TC74HC273ATP	1	5/S	51	41B	A	-	J	G01C317		DP2000/2500	IC31	
		1	5/S	51	47							IC37	
3040488275	IC-TC74HC00AFTP	1	5/S	54	17							IC7	
3040488480	IC-TC74HC08AFEL	1	5/S	51	49							IC39	
3040488592	IC-TC74LCX157FL	1	5/S	51	103							IC93	
3040489275	IC-TC74ACT244FT	1	5/S	51	28							IC18	
3040489632	IC-TC74VHC244F	1	5/S	51	30							IC20	
3040490332	IC-TC8521AM(EL)	1	1/S	51	85							IC75	
41300008000	MEM-F-NAD-AT	1	1/SB	10	6								
		1	1/SB	10	6A	-	-	-	G01C317		DP1600		

PARTS NO.	PARTS NAME	Q'TY / PAGE	Q'TY / PACK	PAGE	ITEM NO.	P	I	R	BSI NO.	SERIAL NO.	REMARKS	LOCATION	C
		1	1/SB	10	6A-1				G01J708		DP1600 NAD, MJD, AUD, ASD, SAD, CND		
41300008000	MEM-F-NAD-AT	1	1/SB	51	0								
		1	1/SB	51	0A				G01C317		DP1600		
		1	1/SB	51	0A-1				G01J708		DP1600 NAD, MJD, AUD, ASD, SAD, CND		
41300035000	MEM-F-TWD-AT	1	1/SB	10	6D	F		J	G01J708		DP1600 TWD		
		1	1/SB	51	0D	F		J	G01J708		DP1600 TWD		
41300510000	PWA-F-DLE-AT	1	1/C	23	61	A		J	G01J733		DP1600S/2000S/2500S (NAD, MJD, AUD, ASD, SAD, TWD)		
41300511000	PWA-F-LCD-VR-AT	1	1/SB	6	25								
41300511100	PWA-F-LCD-VR-AT	1	1/SB	6	25-1	C	B	J	G01F524				
41300512000	PWA-F-PIF-AR1	1	1/SB	10	24								
		1	1/SB	54	0								
41300515100	PWA-F-FUS-AT	1	1/SB	13	31						AUD, ASD, SAD, TWD/CND		
		1	1/SB	13	31A				G01J708		AUD, ASD, CND		
41300515200	PWA-F-FUS-AT	1	1/SB	13	31B	F		J	G01J708		SAD, TWD		
41300521000	PWA-F-RLY-AT	1	1/SB	10	2								
		1	1/SB	10	2A				G01C317		DP1600		
		1	1/SB	10	2A-1				G01I704		DP1600 NAD, MJD, AUD, ASD, SAD, TWD		
		1	1/SB	53	0								
		1	1/SB	53	0A				G01C317		DP1600		
		1	1/SB	53	0A-1				G01I704		DP1600 NAD, MJD, AUD, ASD, SAD, TWD		
41300521100	PWA-F-RLY-AT	1	1/SB	10	2B	A		J	G01C317		DP2000/2500		
		1	1/SB	10	2B-1				G01I704		DP2000/2500 NAD, MJD, AUD, ASD, SAD, TWD		
		1	1/SB	53	0B	A		J	G01C317		DP2000/2500		
		1	1/SB	53	0B-1				G01I704		DP2000/2500 NAD, MJD, AUD, ASD, SAD, TWD		
41300521500	PWA-F-PLY-AT	1	1/SB	10	2C	C	B	D	G01I704		DP1608 CND		
		1	1/SB	53	0C	C	B	D	G01I704		DP1608 CND		
41300521600	PWA-F-RLY-AT	1	1/SB	10	2D	C	B	D	G01I704		DP2008/2508 CND		
		1	1/SB	53	0D	C	B	D	G01I704		DP2008/2508 CND		
41300521700	PWA-F-RLY-AT	1	1/SB	10	2B-2	C	B	B	G01J717		DP2000/2500 NAD, MJD, AUD, ASD, SAD, TWD		
		1	1/SB	53	0B-2	C	B	B	G01J717		DP2000/2500 NAD, MJD, AUD, ASD, SAD, TWD		
41300521900	PWA-F-RLY-AT	1	1/SB	10	2D-1	C	B	B	G01J717		DP2008/2508 CND		
		1	1/SB	53	0D-1	C	B	B	G01J717		DP2008/2508 CND		
41300525000	PWA-F-PNL-TO-AT	1	1/SB	6	22								
		1	1/SB	6	22A				G01J708		DP1600(except TWD),DP2000/2500		
41300531000	PWA-F-RCV-AT	1	1/SB	20	8								
41300532000	PWA-F-SCNRCV-AT	1	1/SB	20	7								
41300551000	PWA-F-PNL-TO-TW	1	1/SB	6	22B	F		J	G01J708		DP1600 TWD		
41301001000	SPEAKER-AT	1	1/C	10	27								
41301002000	WH-SFB-AT	1	1/P	10	22								
		1	1/P	12	20								
41301006000	WH-CASSETTE-AT	1	1/P	10	29								
		1	1/P	19	11								
41301012000	WH-HVPS-AT	1	1/P	10	38								
41301016000	WH-JSP-AT	1	1/P	10	30								
41301020000	WH-PCIF-AT	1	1/P	10	5								
		1	1/P	10	5A				G01J708		NAD, MJD, AUD, ASD, SAD, CND		
41301024000	WH-HTLP-AT	1	1/P	13	11B						220V		
41301028000	WH-PS-ACRLY-AT	1	1/P	13	30						AUD, ASD, SAD, TWD/CND		
41301030000	WH-HTRLMP-AT	1	1/P	9	31						DP1600		
		1	1/P	22	31	A		J	G01C317		DP2000/2500		
41301033000	WH-DVB-HV-AT	1	1/P	10	19								
		1	1/P	15	32								
41301034000	WH-DRB-HV-AT	1	1/P	10	17								
		1	1/P	15	28								
41301035000	WH-PG-HV-AT	1	1/P	10	18								
		1	1/P	11	7								
41301036000	WH-HTLP-USAT	1	1/P	13	11A						120V		
41301044000	BAT-TH-1550AA	1	1/D	10	13								
41301048000	WH-OPE-VR-AT	1	1/P	6	27								
41301053000	WH-BFAN-AT	1	1/P	10	25								
41301057000	WH-NCU-FG-AT	1	1/P	10	8								
41301058000	WH-DEL-AT	1	1/P	10	39								
		1	1/P	14	8								
41301060000	WH-OPE-AT	1	1/P	6	23								
		1	1/P	10	3								
41301061000	WH-PFC-AT	1	1/P	10	28								

PARTS NO.	PARTS NAME	Q'TY / PAGE	Q'TY / PACK	PAGE	ITEM NO.	P	I	R	BSI NO.	SERIAL NO.	REMARKS	LOCATION	C
41301063000	WH-1CST-AT	1	1/P	17	12								
41301064000	WH-2PFS-AT	1	1/P	16	13								
41301065000	WH-2PFC-AT	1	1/P	12	22								
41301067000	WH-TCSW-AT	1	1/P	10	42								
		1	1/P	14	6								
41301068000	WH-24VCOS-AT	1	1/P	13	3								
41301070000	WH-FDS2-AT	1	1/P	8	6								
41301074000	WH-SP-HV-AT	1	1/P	10	16								
		1	1/P	11	9								
41301075000	WH-TCH-HV-AT	1	1/P	10	20								
		1	1/P	11	4								
41301076000	WH-CCH-HV-AT	1	1/P	10	15								
		1	1/P	11	16								
41301077000	WH-TES-AT	1	1/P	10	40								
		1	1/P	14	19								
41301078000	WH-MAINSW-AT	1	1/P	13	12								
		1	1/P	13	12A				G01I704		NAD, MJD, AUD, ASD, SAD, TWD		
41301079000	SM-V-21522-3C6	2	1/C	13	4								
41301080000	WH-FDS2-STH-AT	1	1/P	8	5								
		1	1/P	9	36						DP1600		
		1	1/P	10	31								
		1	1/P	22	36	A	-	J	G01C317		DP2000/2500		
41301081000	WH-PM-AT	1	1/P	10	37								
		1	1/P	13	17								
41301082000	WH-FCOS-AT	1	1/P	10	34								
		1	1/P	13	22								
41301083000	WH-FAN-AT	1	1/P	10	35								
41301084000	WH-MDM-AT	1	1/P	10	33								
		1	1/P	10	33A				G01C317		DP1600		
41301085000	WH-LVPS-AT	1	1/P	10	36								
		1	1/P	10	36A				G01C317		DP1600		
		1	1/P	13	13								
		1	1/P	13	13A				G01C317		DP1600		
41301093000	WH-AC-IO-AT	1	1/P	13	10								
41301094000	WH-FDS1-AT	1	1/P	10	43								
		1	1/P	15	34								
41301096000	PS-HVPS-AT	1	1/C	10	21								
41301103000	K-DHT-SCN-115	1	1/D	4	40A						SAD, TWD		
41301104000	K-DHT-SCN-230	1	1/D	4	40B						AUD, ASD, CND		
41301105000	PWA-F-SLG-AT	1	1/SB	4	5								
		1	1/SB	4	5A				G01C317		DP1600		
41301106000	WH-SCN-ADF-AT	1	1/P	4	2								
		1	1/P	4	2A				G01C317		DP1600		
41301107000	WH-SCN-MAIN-AT	1	1/P	4	3								
		1	1/P	10	4								
41301108000	WH-SCN-PWR-AT	1	1/P	4	4								
		1	1/P	10	32								
41301109000	M/P-SCN-AT	1	1/C	4	17								
41301110000	WH-DHT-RELAY-AT	1	1/P	4	39						AUD, ASD, SAD, TWD/CND		
		1	1/P	4	39A				G01C317		DP1600(AUD, ASD, SAD, TWD/CND)		
41301111000	PWB-F-CBL-AT	2	1/P	4	7								
		2	1/P	4	7A				G01J708		NAD, MJD, AUD, ASD, SAD, CND, DP1600(TWD)		
41301112000	LP-EXPO-AT	1	1/S	5	2								
		1	1/S	5	2A				G01C317		DP1600		
41301113000	INV-EXPO-AT	1	1/C	4	20								
		1	1/C	4	20A				G01C317		DP1600		
41301114000	THEM-CS-7SA-AT	1	1/C	4	37						AUD, ASD, SAD, TWD/CND		
41301122000	WH-LD-AT	1	1/P	10	9								
		1	1/P	10	9A				G01C317		DP1600		
		1	1/P	13	16								
		1	1/P	13	16A				G01C317		DP1600		
41301130000	PS-LVPS-ATUS	1	1/C	13	14A						120V		
		1	1/C	13	14A-1				G01C317		DP1600(120V)		
		1	1/C	13	14A-2				G01J708		DP1600 (NAD, SAD)		
41301130100	PS-LVPS-ATEU	1	1/C	13	14B						220V		
		1	1/C	13	14B-1				G01C317		DP1600(220V)		
41301130200	PS-LVPS-ATTW	1	1/C	13	14E	F	-	J	G01J708		DP1600 TWD		
41301139000	WH-DHT-COVER-AT	1	1/P	4	35						AUD, ASD, SAD, TWD/CND		
41301140000	WH-DRMTHMS-AT	1	1/P	19	8								

PARTS NO.	PARTS NAME	Q'TY / PAGE	Q'TY / PACK	PAGE	ITEM NO.	P	I	R	BSI NO.	SERIAL NO.	REMARKS	LOCATION	C
41301141000	THMS-DRM-AT	1	1/C	19	7								
41301144000	WR-Z-SB-4025	1	5/P	5	33								
41301145000	CLP/W-RLMC-1TV0	1	5/P	4	42	F	-	J	G01B232		AUD, ASD, SAD, TWD/CND		
41301146000	CLP/W-RLMC-5TV0	5	5/P	4	9A						NAD, MJD		
		10	5/P	4	9B						AUD, ASD, SAD, TWD/CND		
		6	5/P	5	41B	A	-	J	G01C317		DP2000/2500		
41301147000	WR-Z-SB-2718	1	5/P	5	34								
41301150000	ZPAN30*05MSZN3L	9	50/P	4	52								
		2	50/P	5	56								
41301151000	PLT-NOISE-LF	1	1/P	4	32								
41301152000	PLT-NOISE-LR	1	1/P	4	30								
41301153000	PLT-NOISE-R	5	1/P	4	31								
		5	1/P	4	31A	-	-	-	G01J708		DP1600/2000, DP2500(NAD, MJD, AUD, ASD, SAD, CND)		
		8	1/P	4	31F	F	-	J	G01J708		DP2500 TWD		
41301154000	GSKT-300286	1	1/P	4	33								
41301155000	GSKT-300278	1	1/P	4	34								
		1	1/P	4	34A	-	-	-	G01C317		DP1600		
41301156000	CORE-KCF-130BK	2	1/D	4	18								
41301160000	WH-APS-1-AB-AW	1	1/P	4	45D	A	-	J	G01C317		DP2000/2500(MJD, AUD, ASD, SAD, TWD/CND)		
		1	1/P	5	37D	A	-	J	G01C317		DP2000/2500(MJD, AUD, ASD, SAD, CND)		
41301161000	WH-APS-1-LT-AW	1	1/P	4	45C	A	-	J	G01C317		DP2000/2500(NAD)		
		1	1/P	5	37C	A	-	J	G01C317		DP2000/2500(NAD)		
41301162000	WH-APS-2-AB-AW	1	1/P	4	44D	A	-	J	G01C317		DP2000/2500(MJD, AUD, ASD, SAD, TWD/CND)		
		1	1/P	5	38D	A	-	J	G01C317		DP2000/2500(MJD, AUD, ASD, SAD, TWD/CND)		
		1	1/P	5	38D-1	-	-	-	G01J708		DP2000/2500(MJD, AUD, ASD, SAD, CND)		
41301163000	WH-APS-2-LT-AW	1	1/P	4	44C	A	-	J	G01C317		DP2000/2500(NAD)		
		1	1/P	5	38C	A	-	J	G01C317		DP2000/2500(NAD)		
41301175000	SM-V-21522-3C6	2	1/C	13	4-1	E	B	J	G01B232				
41301178000	WH-HVPS-AT	1	1/P	10	38-1	E	B	J	G01B232				
41301179000	WH-DVB-HV-AT	1	1/P	10	19-1	C	E	E	G01B292				
		1	1/P	15	32-1	C	E	E	G01B292				
41301180000	WH-DRB-HV-AT	1	1/P	10	17-1	C	E	E	G01B292				
		1	1/P	15	28-1	C	E	E	G01B292				
41301181000	WH-PG-HV-AT	1	1/P	10	18-1	C	E	E	G01B292				
		1	1/P	11	7-1	C	E	E	G01B292				
41301182000	WH-NCU-FG-AT	1	1/P	10	8-1	E	B	J	G01B232				
41301187000	WH-MAINSW-R-AT	1	1/P	13	12B	C	B	D	G01I704		CND		
41301188000	WH-AC-RESET-AT	1	1/P	10	53B	A	-	J	G01I704		CND		
		1	1/P	13	48B	A	-	J	G01I704		CND		
41301189000	WH-PCIF-TW-AT	1	1/P	10	5B	F	-	J	G01J708		DP1600 TWD		
41303011200	PU-1600D	1	1/S	1	16C						ASD/AUD/TWD/SAD		PU
41303011300	PU-1600	1	1/S	1	16A						NAD		PU
41303011400	PU-1600E	1	1/S	1	16B						MJD		PU
41303011500	PU-1600C	1	1/S	1	16D						CND		PU
41303024000	ASM-GBOX-JIG	1	1/C	20	5								
41303033200	PU-1600DN	1	1/S	1	16C-1	C	B	J	G01C301		AUD		PU
41303033300	PU-1600N	1	1/S	1	16A-1	C	B	J	G01C301		NAD(except CANADA)		PU
41303033400	PU-1600EN	1	1/S	1	16B-1	C	B	J	G01C301		MJD		PU
41303033500	PU-1600CN	1	1/S	1	16D-1	C	B	J	G01C301		CND		PU
41303033600	PU-1600DNN	1	1/S	1	16E	C	B	J	G01C301		ASD/TWD/SAD		PU
41303033700	PU-1600CA	1	1/S	1	16F	C	B	J	G01C301		NAD(CANADA only)		PU
41303518000	ASM-GIDE-PAPER	1	1/C	7	1								
41303529000	ASM-HOLDER-TERM	1	1/P	24	32	A	-	J	G01J733		DP1600S/2000S/2500S (NAD, MJD, AUD, ASD, SAD, TWD)		
41303607000	FUSER-1600-120	1	1/S	9	1A						DP1600(120V)		USP
		1	1/S	9	1A-1	-	-	-	G01J708		DP1600(NAD, AUD, ASD, SAD, CND)		USP
41303607100	FUSER-1600-240	1	1/S	9	1B						DP1600(220V)		USP
41303607500	FUSER-2500-120	1	1/S	22	1A	A	-	J	G01C317		DP2000/2500(120V)		USP
		1	1/S	22	1A-1	-	-	-	G01J708		DP2000/2500(NAD, SAD)		USP
41303607600	FUSER-2500-240	1	1/S	22	1B	A	-	J	G01C317		DP2000/2500(240V)		USP
41303607800	FUSER-1600-TW	1	1/S	9	1C	F	-	J	G01J708		DP1600 TWD		USP
41303607900	FUSER-2500-TW	1	1/S	22	1C	F	-	J	G01J708		DP2500 TWD		
41303608000	HR-1600-L	1	1/S	9	16						DP1600		CSP
41303608100	HR-2500-L	1	1/S	22	16	A	-	J	G01C317		DP2000/2500		CSP
41303609000	HR-1600-U	1	1/S	9	21						DP1600		CSP
41303609100	HR-2500-U	1	1/S	22	21	A	-	J	G01C317		DP2000/2500		CSP
41303610000	ASM-PG-HTR-S	1	1/S	9	26A						DP1600(120V)		

PARTS NO.	PARTS NAME	Q'TY / PAGE	Q'TY / PACK	PAGE	ITEM NO.	P	I	R	BSI NO.	SERIAL NO.	REMARKS	LOCATION	C
		1	1/S	22	26A	A	-	J	G01C317		DP2000/2500(120V)		
41303610100	ASM-PG-HTR-S	1	1/S	9	26B						DP1600(220V)		
		1	1/S	22	26B	A	-	J	G01C317		DP2000/2500(220V)		
41303611000	OD-1600	1	1/S	23	55	A	-	J	G01J733		DP1600S/2000S/2500S (NAD, MJD, AUD, ASD, SAD, TWD)		DRM
		1	1/S	101	1	A	-	J	G01K784		DP1600S/2000S/2500S(NAD, MJD, AUD, ASD, SAD, TWD		DRM
41303612000	BL-1600D	1	1/S	23	57	A	-	J	G01J733		DP1600S/2000S/2500S (NAD, MJD, AUD, ASD, SAD, TWD)		CSP
41303621000	ASM-PG-LSU-S	1	1/S	13	15								
		1	1/S	13	15A	-	-	-	G01C317		DP1600		
41303621100	ASM-PG-LSU-S	1	1/S	13	15B	A	-	J	G01C317		DP2000/2500		
41303630000	ASM-P/U-TOOL	1	1/C	20	6								
41303636000	MAIN-CH-1600	1	1/S	7	4								USP
41303638000	CH-KIT-1600	1	1/S	21	2						81K/99K		KIT
41303639000	FU-KIT-1600	1	1/S	21	1						81K		KIT
		1	1/S	21	1A	-	-	-	G01C317		DP1600(81K)		KIT
41303639100	FU-KIT-2500	1	1/S	21	1B	A	-	J	G01C317		DP2000/2500(99K)		KIT
41303640000	ROL-KIT-16CST	1	1/S	21	3						81K/99K		KIT
41303644000	ASM-PG-CCD-AS	1	1/S	5	36								
		1	1/S	5	36A	-	-	-	G01C317		DP1600		
41303645000	ASM-PG-CCD-AS-2	1	1/S	5	36B	A	-	J	G01C317		DP2000/2500		
41303649000	ASM-PG-MIRROR-1	1	1/S	5	9								
41303650000	ASM-PG-MIRROR-2	2	1/S	5	19								
41303651000	ASM-PG-CRG-1	1	1/S	5	1								
		1	1/S	5	1A	-	-	-	G01J735		DP1600		
41303652000	ASM-PG-CRG-2	1	1/S	5	18								
41303664000	ASM-PG-G/P-AB	1	1/C	3	1B						MJD, AUD, ASD, SAD		
41303665000	ASM-PG-G/P-INCH	1	1/C	3	1A						NAD		
41303666000	ASM-PG-G/P-ABK	1	1/C	3	1C						TWD/CND		
41303687000	ASM-PG-CRG-2	1	1/S	5	18-1	C	B	J	G01B285				
41303709000	ASM-PG-HP300-S	1	1/C	20	14	A	-	J	G01J732				
41303710000	ASM-PG-GE334C-S	1	1/C	20	15	A	-	J	G01J732				
41303711000	ASM-PG-ALV2	1	1/C	20	13	A	-	J	G01J732				
41303712000	D-1600	1	1/S	101	3	A	-	J	G01K784		DP1600S/2000S/2500S(NAD, MJD, AUD, ASD, SAD, TWD)		DEV
41303713000	PU-KIT-1600	1	1/S	21	4	A	-	J	G01J733		27K/33K DP16/20/2500S(NAD, MJD, AUD, ASD, SAD, TWD)		KIT
41303714000	DEV-KIT-1600	1	1/S	21	5	A	-	J	G01J733		27K/33K DP16/20/2500S(NAD, MJD, AUD, ASD, SAD, TWD)		KIT
41303715300	FUSER-1600-120	1	1/S	9	1A-2	C	B	D	G01K772		DP1600(NAD, AUD, ASD, SAD, CND)		USP
41303715400	FUSER-1600-240	1	1/S	9	1B-1	C	B	D	G01K772		DP1600(220V)		USP
41303715500	FUSER-1600-TWD	1	1/S	9	1C-1	C	B	D	G01K772		DP1600 TWD		USP
41304001000	K-PL-CLT-FEED	1	1/P	17	1								
41304004000	K-SFT-LIFT-TRAY	1	1/P	18	1								
41304005000	K-PL-PINION-TRY	1	1/P	18	19								
41304006000	K-TRAY-CST-AT	1	1/PP	18	10								
41304007000	K-PIN-GUIDE	1	1/P	2	9								
41304008000	WIRE-TC	2	1/P	7	9								MSP
41304009000	K-BRKT-STUD-ADU	2	1/P	8	4								
41304011000	K-FRAME-HR-R	1	1/P	9	14						DP1600		
41304012000	K-FRAME-HR-F	1	1/P	9	22						DP1600		
41304015000	K-PLT-GEAR-AT	1	1/P	11	31								
		1	1/P	11	31A	-	-	-	G01C317		DP1600		
41304016000	K-SHAFT-DRUM-AT	1	1/P	11	1								
41304017000	K-PLT-PLY/G	1	1/P	11	29								
		1	1/P	11	29A	-	-	-	G01C317		DP1600		
41304018000	K-SHUTTER-DEV	1	1/P	24	33	A	-	J	G01J733		DP1600S/2000S/2500S (NAD, MJD, AUD, ASD, SAD, TWD)		
41304020000	K-AGIATOR-DEV	1	1/P	24	5	A	-	J	G01J733		DP1600S/2000S/2500S (NAD, MJD, AUD, ASD, SAD, TWD)		
41304026000	K-HLDR-PAD	2	1/P	23	37	A	-	J	G01J733		DP1600S/2000S/2500S (NAD, MJD, AUD, ASD, SAD, TWD)		MSP
41304028000	K-BRKT-FR-EXIT	1	1/P	8	42								
41304029000	K-BRKT-EXIT-CON	1	1/P	8	27								
41304030000	K-GUIDE-EXIT-2	1	1/P	8	38								
		1	1/P	8	38A	-	-	-	G01C317		DP1600		
41304031000	K-GUIDE-EXIT-1	1	1/C	8	10								
41304034000	K-PADDLE-CLN	1	1/P	23	28	A	-	J	G01J733		DP1600S/2000S/2500S (NAD, MJD, AUD, ASD, SAD, TWD)		

PARTS NO.	PARTS NAME	Q'TY / PAGE	Q'TY / PACK	PAGE	ITEM NO.	P	I	R	BSI NO.	SERIAL NO.	REMARKS	LOCATION	C
41304035000	K-HOLDER-TC	1	1/P	7	5								
41304036000	K-HSG-HR/RLR	1	1/C	9	33						DP1600		
41304037100	K-HSG-PR/RLR	1	1/C	9	4						DP1600		
41304038100	K-GUIDE-CASE	1	1/P	24	43	A	-	J	G01J733		DP1600S/2000S/2500S		
											(NAD, MJD, AUD, ASD, SAD, TWD)		
41304040000	K-FLAP-A	1	1/P	15	12								
41304045000	K-COV-TOP	1	1/PP	2	4								
41304046000	K-KIT-CLN(TSB)	1	1/P	7	29								
41304049000	K-NOZZLE-CLN	1	1/P	23	67	A	-	J	G01J733		DP1600S/2000S/2500S		
											(NAD, MJD, AUD, ASD, SAD, TWD)		
41304050000	K-TRAY-NZL-TNR	1	1/P	23	49	A	-	J	G01J733		DP1600S/2000S/2500S		
											(NAD, MJD, AUD, ASD, SAD, TWD)		
41304052000	K-PLTE-GER-STD-	1	1/P	24	18	A	-	J	G01J733		DP1600S/2000S/2500S		
											(NAD, MJD, AUD, ASD, SAD, TWD)		
41304053000	K-LID-MEMORY	1	1/P	2	2								
41304054000	K-SP-TC	1	1/P	19	9								
41304055000	K-BRKT-RE-EXIT	1	1/P	8	24								
41304058000	K-PL-RLR-TSN	1	1/P	11	41								
		1	1/P	11	41A	-	-	-	G01C317		DP1600		
41304058100	K-PL-RLR-TSN	1	1/P	11	41B	A	-	J	G01C317		DP2000/2500		
41304059000	K-COV-FRONT	1	1/PP	1	5								
		1	1/PP	1	5A	-	-	-	G01C317		DP1600		
41304059100	K-COV-FRONT	1	1/PP	1	5B	A	-	J	G01C317		DP2000/2500		
41304060000	K-ROLLER-EXIT	1	1/KP	8	43								
		1	1/KP	8	43A	-	-	-	G01C317		DP1600		
41304061000	K-M/DC-MAIN-AT	1	1/C	11	30								
		1	1/C	11	30A	-	-	-	G01C317		DP1600		
41304061100	K-M/DC-MAIN-AT	1	1/C	11	30A-1	C	B	E	G01H633		DP1600		
41304064000	K-SFT-HANDLE	1	1/P	19	3								
41304064100	K-SFT-HANDLE	1	1/P	19	4								
41304065000	K-WALL-SIDE-R	1	1/PP	18	5								
41304066200	K-GUIDE-P/U	1	1/P	15	14C						ASD, AUD, SAD		
41304066300	K-GUIDE P/U	1	1/P	15	14A						NAD		
41304066400	K-GUIDE-P/U	1	1/P	15	14B						MJD/CND		
41304066500	K-GUIDE-P/U	1	1/PP	15	14D	A	-	J	G01J708		TWD		
41304067000	K-CST-AT	1	1/PP	18	21								
41304077000	K-LBL-PLT-PFR/B	1	1/P	15	18								
		1	1/P	15	18A	-	-	-	G01C317		DP1600		
41304083000	K-CVR-SR-S	1	1/PP	7	18								
41304084000	K-STAY-F-S	1	1/PP	19	1								
41304092000	K-SPL-GRID	1	1/P	11	13								
		1	1/P	11	13A	-	-	-	G01C317		DP1600		
41304097000	K-PLT-PLY/G	1	1/P	11	29A-1	C	B	F	G01C306		DP1600		
		1	1/P	11	29B	A	-	J	G01C317		DP2000/2500		
41304100000	K-GUIDE-EX-2-AW	1	1/P	8	38B	A	-	J	G01C317		DP2000/2500		
41304102000	K-RLR-EXIT-AW	1	1/KP	8	43B	A	-	J	G01C317		DP2000/2500		
41304103000	K-LID-ADF	1	1/P	2	3-1	C	E	E	G01B269				
41304104000	K-COV-TOP-R	1	1/PP	2	7-1	C	E	E	G01B269				
41304105000	K-COV-TOP-L	1	1/PP	2	16-1	C	E	E	G01B269				
41304106000	K-COV-LEFT	1	1/PP	1	7-1	C	E	E	G01B269				
41304107000	K-COV-LEFT-R	1	1/PP	1	15-1	C	E	E	G01B269				
41304109000	K-COV-ONT-AT5	1	1/PP	6	1-1	C	E	E	G01B269				
41304113000	K-PL-ROLLER-ID-	1	1/KP	23	40	A	-	J	G01J733		DP1600S/2000S/2500S		
											(NAD, MJD, AUD, ASD, SAD, TWD)		
41304114000	K-LBL-PLT-TSB	1	1/P	15	18A-1	C	B	F	G01C308		DP1600		
		1	1/P	15	18B	A	-	J	G01C317		DP2000/2500		
41304124000	K-COV-REAR	1	1/PP	2	1-1	C	B	E	G01C393				
41304125000	K-LID-MEMORY-2	1	1/P	2	21B	F	-	J	G01J708		TWD		
41304133000	K-LID/M-PCON	1	1/P	2	21A	A	-	J	G01F522		NAD, MJD, AUD, ASD, SAD, CND		
41304143000	K-PLY-SCN	1	1/P	4	50	A	B	D	G01I686				
41304144000	K-SPL-EARTH-AT	1	1/P	9	34-1	C	B	D	G01J747		DP1600		
41304506000	SFT-SEP-AT	1	1/P	16	6								
41304507000	SFT-DRV-PICK	1	1/P	17	19								
41304508000	SFT-ROL-FEED	1	1/P	17	18								
41304510000	PIN-ADJUST-LVR	1	1/P	18	11								
41304511000	PIN-ADJUST-WALL	1	1/P	18	17								
41304514000	SHAFT-PINCH	1	1/KP	15	9								
41304515000	PIN-GUIDE	1	5/P	2	12								
41304523000	RLR-FUS-CLN	1	1/KP	9	18						DP1600		MSP
		1	1/KP	22	18	A	-	J	G01C317		DP2000/2500		MSP
41304525000	SHAFT-TSM-AT5	1	1/P	14	15								

PARTS NO.	PARTS NAME	Q'TY / PAGE	Q'TY / PACK	PAGE	ITEM NO.	P	I	R	BSI NO.	SERIAL NO.	REMARKS	LOCATION	C
41304541000	SHAFT-GATE	2	1/P	8	9								
41304544000	SFT-EXIT	1	1/P	8	41								
41304546000	SFT-PUSH-SHTR	1	1/P	15	25								
41304549000	SFT-CLH-EXIT	1	1/P	8	33								
41304556000	SFT-EXIT-JOIN-1	2	1/P	8	14								
41304557000	SFT-EXIT-JOIN-2	1	1/P	8	13								
41304560000	STUD-DHR	1	1/P	11	21								
41304564000	SFT-EXIT-FR	1	1/P	8	39								
		1	1/P	8	39A	-	-	-	G01C317		DP1600		
41304566000	SFT-EXIT-FR	1	1/P	8	39A-1	C	B	F	G01C324		DP1600		
		1	1/P	8	39B	A	-	J	G01C317		DP2000/2500		
41305010000	FRM-RLR-FEED	1	1/P	17	10								
41305011000	PL-CONT-SFB	1	1/P	12	21								
41305012000	PL-ADJUST-WALL	1	1/P	18	16								
41305014000	LVR-LIFT-TRAY	1	1/P	18	4								
41305015000	LVR-ADJUST-WALL	1	1/P	18	15								
41305017000	PLT-MDL-BASE	1	1/P	19	5								
41305018000	SHIELD-PCI/F	1	1/P	10	23								
41305020000	SHIELD-AC	1	1/P	13	6								
41305022000	PLT-BASE-ADD	1	1/P	19	2								
41305024000	HOLDER-INLET	1	1/P	13	7								
41305042000	PL-HOOK	1	1/P	7	23								
41305046000	BRKT-HTR	1	1/P	9	7						DP1600		
41305047000	SPL-FRAME-F	1	1/P	9	34						DP1600		
41305059000	BLADE-DOCTOR	1	1/P	24	6	A	-	J	G01J733		DP1600S/2000S/2500S		
											(NAD, MJD, AUD, ASD, SAD, TWD)		
41305060000	BRKT-BLADE-DEV	1	1/P	24	8	A	-	J	G01J733		DP1600S/2000S/2500S		
											(NAD, MJD, AUD, ASD, SAD, TWD)		
41305066000	SHIELD-PCB	1	1/P	2	15								
41305067000	PL-FDS1	1	1/P	15	35								
41305071000	SUPPORT-PU	1	1/P	23	48	A	-	J	G01J733		DP1600S/2000S/2500S		
											(NAD, MJD, AUD, ASD, SAD, TWD)		
41305074000	PL-P/U-SUPPORT	1	1/P	15	21								
41305076000	PLT-CO-SW	1	1/P	13	21								
41305083000	LID-CONNECTOR	1	1/P	13	8								
41305091000	BRKT-CASE-DEV	1	1/P	24	17	A	-	J	G01J733		DP1600S/2000S/2500S		
											(NAD, MJD, AUD, ASD, SAD, TWD)		
41305104000	STAY-HF-SENSOR	1	1/P	9	39						DP1600		
41305105000	BRKT-JOINT-EXIT	1	1/P	8	15								
41305107000	BRKT-JOINT-SPRT	1	1/P	8	23								
41305108000	PLT-HR-DRV	1	1/P	11	20								
		1	1/P	11	20A	-	-	-	G01C317		DP1600		
41305126000	PL-M/DC-TS-ATAW	1	1/P	14	3-1								
		1	1/P	14	3A	-	-	-	G01C317		DP1600		
41305127000	PLATE-LVR-F	1	1/P	9	24-1						DP1600		
41305128000	PLATE-LVR-R	1	1/P	9	12-1						DP1600		
41305137100	SHIELD-PCB	1	1/PP	2	15-1	C	B	J	G01F522				
41305138000	PL-SHIELD-PFC	1	1/P	13	44C	A	-	J	G01J708		DP1600/2500 TWD		
41305139000	STAY-LVPS-EMI	1	1/P	13	43C	A	-	J	G01J708		DP1600/2500 TWD		
41305146000	PLT-DRUM-MAIN-S	1	1/P	23	16	A	-	J	G01J733		DP1600S/2000S/2500S		
											(NAD, MJD, AUD, ASD, SAD, TWD)		
41305149000	CASE-CHGR-N	1	1/PP	23	36	A	-	J	G01J733		DP1600S/2000S/2500S		
											(NAD, MJD, AUD, ASD, SAD, TWD)		
41305150000	TERM-BIAS-DEV-N	1	1/P	24	42	A	-	J	G01J733		DP1600S/2000S/2500S		
											(NAD, MJD, AUD, ASD, SAD, TWD)		
41305501000	SPR-LVR-PICK	1	1/P	17	8								
41305502000	SPC-CPG-LIFT	1	1/P	12	7								
41305503000	SPC-LVR-WALL	1	1/P	18	13								
41305504000	SPL-ADF	1	1/P	2	14								
41305505000	SPR-SENSOR-LVR	1	1/P	15	30								
41305506000	SPL-DEV-AT5	1	1/P	15	31								
41305507000	SPL-PFR-AT5	1	1/P	15	22								
41305508000	SPL-PFPR-AT5	1	1/P	15	27								
41305509000	SPL-TES-AT5	2	1/P	14	18								
41305511000	SPR-HOOK	1	5/P	7	22								
41305512000	SPC-TC	2	1/P	7	2								
41305513000	PL-CH-EARTH	1	1/P	7	21								
41305514000	SPC-CL-300	2	1/P	9	19						DP1600		
		2	1/P	22	19	A	-	J	G01C317		DP2000/2500		
41305515000	CRR-HT/RLR	2	5/P	9	8						DP1600		
		2	5/P	22	8	A	-	J	G01C317		DP2000/2500		

PARTS NO.	PARTS NAME	Q'TY / PAGE	Q'TY / PACK	PAGE	ITEM NO.	P	I	R	BSI NO.	SERIAL NO.	REMARKS	LOCATION	C
41305516000	SPE-CLW	6	5/P	9	29						DP1600		
		6	5/P	22	29	A	-	J	G01C317		DP2000/2500		
41305517000	SPE-PR30-200	2	1/P	9	13						DP1600		
		1	1/P	11	28								
		2	1/P	22	13	A	-	J	G01C317		DP2000/2500		
41305518000	SPL-THERMO	1	1/P	9	32						DP1600		
41305519000	SPC-CPG-TC	2	5/P	14	9								
41305520000	SPL-DCL-AT5	3	1/P	14	5								
41305521000	SPC-CPG-DRUM	1	5/P	11	10								
41305523000	SPL-CW-AT5	1	1/P	11	15								
41305525000	SPL-GRID2-AT5	1	1/P	11	14								
		1	1/P	11	14A	-	-	-	G01C317		DP1600		
41305527000	SPL-PAG-AT5	1	1/P	11	6								
41305528000	SPL-SFT/D-AT5	1	1/P	11	17								
41305529000	SPL-DCW-AT5	1	1/P	11	8								
41305532000	SPC-BLADE-CLN	2	5/P	23	58	A	-	J	G01J733		DP1600S/2000S/2500S (NAD, MJD, AUD, ASD, SAD, TWD)		
41305536000	SPD-SCRPR-DRUM	3	1/P	23	8	A	-	J	G01J733		DP1600S/2000S/2500S (NAD, MJD, AUD, ASD, SAD, TWD)		
41305538000	SPRING-ACTR	1	5/P	8	17								
41305539000	SPRING-EXIT-F-1	1	5/P	8	37								
		1	5/P	8	37A	-	-	-	G01C317		DP1600		
41305540000	SPRING-EXIT-R-1	1	5/P	8	36								
		1	5/P	8	36A	-	-	-	G01C317		DP1600		
41305542000	SPC-HOOK-PU	1	5/P	23	51	A	-	J	G01J733		DP1600S/2000S/2500S (NAD, MJD, AUD, ASD, SAD, TWD)		
41305546000	SPL-LOCK-WALL-R	1	1/P	18	9								
41305547000	SPC-DC	1	1/P	7	3								
41305548000	SPE-WIRE-FED3	2	5/P	7	11								
41305550000	SPC-PUSH-SHTR	1	1/P	15	24								
41305551000	SPC-LVR-PUSH-A	1	5/P	7	27								
41305552000	SPC-RPLC-SHTR	1	1/P	23	75	A	-	J	G01J733		DP1600S/2000S/2500S (NAD, MJD, AUD, ASD, SAD, TWD)		
41305553000	SPE-PU-SIDE	2	5/P	23	47	A	-	J	G01J733		DP1600S/2000S/2500S (NAD, MJD, AUD, ASD, SAD, TWD)		
41305556000	NZL-CLN-SP	1	1/P	23	65	A	-	J	G01J733		DP1600S/2000S/2500S (NAD, MJD, AUD, ASD, SAD, TWD)		
41305559000	SPRING-DRV-FR-2	1	5/P	8	19								
41305560000	SPE-SHUTTER	2	5/P	24	35	A	-	J	G01J733		DP1600S/2000S/2500S (NAD, MJD, AUD, ASD, SAD, TWD)		
41305561000	SPC-LVR-PUSH-B	1	5/P	7	28								
41305566000	SPR-FLAP-B	1	5/P	2	19								
41305567000	SPE-RLR-TSN	1	1/P	11	38								
41305571000	SPE-P/R-CLN-550	1	5/P	15	11								
		2	5/P	15	11A	E	E	J	G01C317		DP1600		
		1	5/P	15	11B	A	-	J	G01C317		DP2000/2500		
41305575000	SPL-TREW-AT5	1	1/P	11	5-1								
41305576000	SPL-F-CH-EARTH	1	1/P	15	38								
41305577000	K-SPL-GRID	1	1/P	11	13A-1	C	B	D	G01C304		DP1600		
41305578000	SPC-TC	2	1/P	7	2-1	C	B	J	G01C394				
41305579000	SPE-WIRE-DRUM-2	1	1/P	23	32	A	-	J	G01J733		DP1600S/2000S/2500S (NAD, MJD, AUD, ASD, SAD, TWD)		
41305582000	SPC-CL-500	2	1/P	9	19-1	C	B	D	G01K772		DP1600		
		2	1/P	22	19-1	C	B	D	G01K772		DP2000/2500		
41305586000	SPL-CW-AT5-N	1	5/P	11	15-1	C	B	D	G01K773				
41305587000	SPL-GRID-AT5-N	1	5/P	11	13A-2	C	B	D	G01K773		DP1600		
41305588000	SPL-TREW-AT5-N	1	5/P	11	5-2	C	B	D	G01K773				
41305589000	SPL-DCW-AT5-N	1	5/P	11	8-1	C	B	D	G01K773				
41305590000	SPL-PAG-AT5-N	1	5/P	11	6-1	C	B	D	G01K773				
41306001000	GER-IDL-MID-29	2	1/P	12	13								
		1	1/P	12	13-1	D	-	D	G01J709				
41306002000	PLY/T-PICK-20	1	1/P	17	21								
41306005000	LEVER-RLR-PICK	1	1/P	17	7								
41306007000	SLIDER-CST	6	1/P	19	6								
41306008000	CATCH-CST	1	1/P	19	14								
41306010000	GER-MID-24-30	3	1/P	12	11								
41306011000	ARM-RLR-PICK	2	1/P	17	23								
41306012000	ACTR-EMPTY-PPR	1	1/P	17	24								
41306013000	HOLDER-RLR-SEP	1	1/P	16	9								
		1	1/P	16	9A	-	-	-	G01C317		DP1600		
41306014000	LEVER-RLR-SEP	1	1/P	16	10								

PARTS NO.	PARTS NAME	Q'TY / PAGE	Q'TY / PACK	PAGE	ITEM NO.	P	I	R	BSI NO.	SERIAL NO.	REMARKS	LOCATION	C
41306015000	GUIDE-FRM-FEED	2	1/P	17	5								
41306016000	STAY-CST-F	1	1/P	19	13								
41306017000	GUIDE-2ND-AT	1	1/P	16	11								
41306018000	GUIDE-1ST-AT	1	1/P	16	1								
41306019000	GUIDE-SFB-AT	1	1/P	1	4								
41306020000	PLY/T-MID-16-3G	1	1/P	12	17								
41306022000	CPG-LIFT-28	1	1/P	12	8								
41306023000	GER-TRAY-80-13	1	1/P	12	1								
41306024000	GER-TRAY-24-14	1	1/P	12	9								
41306025000	GER-TRAY-21	1	1/P	12	6								
41306026000	CASE-TRY-DEV-R	1	1/P	12	2								
41306027000	CASE-TRY-DEV-F	1	1/P	12	5								
41306028000	BUSH-SFT-LIFT	2	5/P	18	2								
41306030000	LID-LVR-ADJUST	1	1/P	18	14								
41306031000	WALL-END-AT	1	1/P	18	20								
41306033000	WALL-SIDE-F-AT	1	1/KP	18	12								
41306035000	CASING-OZON-S	1	1/P	1	12								
41306037000	DUCT-FRONT-SIDE	1	1/P	14	1								
41306038000	HOLDER-AU1	1	1/P	13	18								
41306041000	GUIDE-MEMORY	1	1/P	10	10								
41306044000	GEAR-24M1.0	1	1/P	15	2								
41306045000	LEVER-SENSOR	1	1/P	15	29								
41306046000	GEAR-F/R	1	1/P	15	5								
41306049000	COVER-TERM-TES	1	1/P	14	17								
41306050000	HOOK-R	1	1/P	7	17								
41306051000	HOOK-F	1	1/P	7	20								
41306052000	HOOK-LEVER	1	1/P	7	30								
41306054000	FLAP-PAPER-B	1	1/P	2	11								
41306058000	BUSH-CL-RLR	2	1/P	9	17						DP1600		MSP
		2	1/P	22	17	A	-	J	G01C317		DP2000/2500		MSP
41306059000	BUSH-HR/RLR	2	1/P	9	10						DP1600		MSP
		2	1/P	22	10	A	-	J	G01C317		DP2000/2500		MSP
41306061000	GEAR-HR/EXIT	1	1/P	9	5						DP1600		
		1	1/P	22	5	A	-	J	G01C317		DP2000/2500		
41306062000	LEVER-PR-F	1	1/P	9	25						DP1600		
41306063000	LEVER-PR-R	1	1/P	9	6						DP1600		
41306065000	GEAR-HT/IDLE	1	1/P	9	15						DP1600		MSP
41306066000	GUIDE-PR/RLR	1	1/P	9	20						DP1600		
41306067000	SEP-HT/RLR	6	6/P	9	28						DP1600		MSP
		6	6/P	22	28	A	-	J	G01C317		DP2000/2500		MSP
41306070000	CPG-TC-AT5	1	5/P	14	10								
41306072000	WHEEL-WORM-AT5	1	1/P	14	13								
		1	1/P	14	13A	-	-	-	G01C317		DP1600		
41306073000	HOLDER-SPL-DCL	1	1/P	14	4								
41306075000	GER-98M0525M06	1	1/P	11	46								
41306076000	GER-63M0527M06	1	1/P	11	34								
41306077000	GER-77M0.6	1	1/P	11	36								
41306078000	GER-50M0.6-AT5	1	1/P	11	32								
		1	1/P	11	32A	-	-	-	G01C317		DP1600		
41306079000	GER-35M1.0	1	1/P	11	45								
41306081000	GER-56M0.6	1	1/P	11	33								
41306082000	GER-42M062OM08	1	1/P	11	24								
41306084000	GER-48M0642M10	1	1/P	11	37								
		1	1/P	11	37A	-	-	-	G01C317		DP1600		
41306085000	GER-34M0819M10	1	1/P	11	22								
		1	1/P	11	22A	-	-	-	G01C317		DP1600		
41306086000	GER-16M1048M10	1	1/P	11	39								
		1	1/P	11	39A	-	-	-	G01C317		DP1600		
41306088000	CPG-DRUM-AT5	1	1/P	11	11								
		1	1/P	11	11A	-	-	-	G01C317		DP1600		
41306090000	HOLDER-BRG-12	1	1/P	11	18								
41306092000	GP-1S030/3GT025	1	1/P	11	27								
41306094000	BUSH-AUGER	1	5/P	24	30	A	-	J	G01J733		DP1600S/2000S/2500S (NAD, MJD, AUD, ASD, SAD, TWD)		
41306097000	BUSH-AGITATOR	2	5/P	24	20	A	-	J	G01J733		DP1600S/2000S/2500S (NAD, MJD, AUD, ASD, SAD, TWD)		
41306099000	GEAR-IDLER-C	1	1/P	24	16	A	-	J	G01J733		DP1600S/2000S/2500S (NAD, MJD, AUD, ASD, SAD, TWD)		
41306100000	GEAR-IDLER-D	1	1/P	24	22	A	-	J	G01J733		DP1600S/2000S/2500S (NAD, MJD, AUD, ASD, SAD, TWD)		
41306101000	GEAR-AGITA-DEV	1	1/P	24	24	A	-	J	G01J733		DP1600S/2000S/2500S		

PARTS NO.	PARTS NAME	Q'TY / PAGE	Q'TY / PACK	PAGE	ITEM NO.	P	I	R	BSI NO.	SERIAL NO.	REMARKS	LOCATION	C
											(NAD, MJD, AUD, ASD, SAD, TWD)		
41306103000	GEAR-SLEEVE-DEV	1	1/P	24	13	A	-	J	G01J733		DP1600S/2000S/2500S		
											(NAD, MJD, AUD, ASD, SAD, TWD)		
41306104000	GEAR-IDLER-A	1	1/P	24	15	A	-	J	G01J733		DP1600S/2000S/2500S		
											(NAD, MJD, AUD, ASD, SAD, TWD)		
41306105000	GEAR-IDLER-B	1	1/P	24	23	A	-	J	G01J733		DP1600S/2000S/2500S		
											(NAD, MJD, AUD, ASD, SAD, TWD)		
41306116000	COVER-DEV	1	1/P	24	1	A	-	J	G01J733		DP1600S/2000S/2500S		
											(NAD, MJD, AUD, ASD, SAD, TWD)		
41306117000	CASE-DEV	1	1/P	24	40	A	-	J	G01J733		DP1600S/2000S/2500S		
											(NAD, MJD, AUD, ASD, SAD, TWD)		
41306119000	AUGER-CLN	1	1/P	23	70	A	-	J	G01J733		DP1600S/2000S/2500S		
											(NAD, MJD, AUD, ASD, SAD, TWD)		
41306121000	GEAR-04S030-04	1	1/P	23	13	A	-	J	G01J733		DP1600S/2000S/2500S		
											(NAD, MJD, AUD, ASD, SAD, TWD)		
41306122000	GEAR-04S035-04	1	1/P	23	14	A	-	J	G01J733		DP1600S/2000S/2500S		
											(NAD, MJD, AUD, ASD, SAD, TWD)		
41306123000	GEAR-04S023-04	1	1/P	23	9	A	-	J	G01J733		DP1600S/2000S/2500S		
											(NAD, MJD, AUD, ASD, SAD, TWD)		
41306130000	SFT-WIRE-CHG	1	1/P	23	38	A	-	J	G01J733		DP1600S/2000S/2500S		
											(NAD, MJD, AUD, ASD, SAD, TWD)		
41306135000	BUSH-1821*03-M	1	1/P	23	54	A	-	J	G01J733		DP1600S/2000S/2500S		
											(NAD, MJD, AUD, ASD, SAD, TWD)		
41306147000	ACTR-EXIT-SENS	1	1/P	8	18								
		1	1/P	8	18A	-	-	-	G01C317		DP1600		
41306148000	ROLLER-EXIT	4	1/P	8	40								
41306149000	GEAR-DRV-EXIT-1	1	1/P	8	35								
41306150000	GEAR-DR-EXIT2/4	2	1/P	8	20								
41306151000	GEAR-DRV-EXIT-3	1	1/P	8	22								
41306152000	GEAR-DRV-EXIT-5	1	1/P	8	12								
41306153000	ROL-GUIDE-2	1	1/P	8	21								
41306154000	ROL-GUIDE-1	1	1/P	8	34								
41306156000	GATE-EXIT	12	1/P	8	16								
		12	1/P	8	16A	-	-	-	G01C317		DP1600		
41306157000	CVR-EXIT-GUIDE	1	1/P	8	8								
41306160000	GEAR-DRV-EXIT-7	1	1/P	8	46								
41306164000	LID-ADF	1	1/P	2	3								
41306165000	LID-SW	1	1/P	1	20								
41306167000	COVER-HVPS	1	1/P	10	14								
41306168000	COV-FRM-F-2	1	1/P	1	1								
41306169000	STOP-PAPER	1	1/P	1	11								
41306173000	COV-PANEL-F	1	1/PP	1	18								
41306175100	COV-OPEN-F	1	1/PP	1	6								
		1	1/PP	1	6A	-	-	-	G01C317		DP1600		
41306175200	COV-OPEN-F	1	1/PP	1	6B	A	-	J	G01C317		DP2000		
41306175300	COV-OPEN-F	1	1/PP	1	6C	A	-	J	G01C317		DP2500		
41306176000	COV-FRM-F-1	1	1/PP	1	2								
41306177000	COV-FRM-R	1	1/PP	1	14								
41306178000	COV-GUIDE	1	1/PP	1	3								
41306179000	COV-RIGHT-R	1	1/PP	2	6								
41306180000	COV-LEFT	1	1/PP	1	7								
41306181000	COV-LEFT-R	1	1/PP	1	15								
41306182000	TRAY-PAPER	1	1/PP	1	9								
41306183000	COV-CST	1	1/PP	18	26								
41306184000	HANDLE-CST	1	1/PP	18	28								
41306185000	COV-REAR	1	1/PP	2	1								
41306186000	COV-TOP-R	1	1/PP	2	7								
41306187000	COV-TOP-L	1	1/PP	2	16								
41306195000	COV-OPE-TOP	1	1/PP	6	3								
		1	1/PP	6	3A	-	-	-	G01J708		NAD, MJD, AUD, ASD, SAD, CND		
41306195200	COV-OPE-TOP	1	1/PP	6	3C	F	-	J	G01J708		TWD		
41306198000	KEY-TEN	1	1/D	6	14								
41306200000	COV-LCD-POWER	1	1/D	6	13								
41306202000	KEY-CROSS	4	1/D	6	5								
41306203000	COV-LCD	1	1/D	6	4								
41306205000	KEY-START	1	1/D	6	9								
41306207000	KEY-STOP	1	1/D	6	8								
41306209000	KEY-FNC-CLR	1	1/D	6	6								
41306211000	COV-LCD-FNC-CLR	1	1/D	6	7								
41306212000	COV-LCD-TYPE	1	1/D	6	16								
41306213000	KEY-TYPE	1	1/D	6	15								
41306214000	KEY-COPY	1	1/D	6	18								

PARTS NO.	PARTS NAME	Q'TY / PAGE	Q'TY / PACK	PAGE	ITEM NO.	P	I	R	BSI NO.	SERIAL NO.	REMARKS	LOCATION	C
41306215000	COV-LCD-FNC	2	1/P	6	11								
		2	1/P	6	11A	-	-	-	G01J708		NAD, MJD, AUD, ASD, SAD, CND		
		1	1/P	6	11C	D	-	J	G01J708		TWD		
41306215200	COV-LCD-FNC	1	1/P	6	10								
41306215300	COV-LCD-FNC	1	1/P	6	12								
41306215400	COV-LCD-FNC	1	1/P	6	17								
41306216000	HOLDER-OPE-TOP	1	1/P	6	24								
41306218000	COV-LCD-VOLUME	1	1/P	6	26								
41306221000	COV-SCANNER-F	1	1/PP	2	5								
41306223000	COV-ONT-AT5	1	1/PP	6	1								
41306249000	POCKET-MANUAL	1	1/PP	2	17								
41306252000	COVER-MODULAR	3	1/PP	10	26								
41306255000	GER-IDL-MID-29W	1	1/P	12	10								
41306256000	LID-HANDLE-L	2	1/P	1	8								
41306258100	COVER-PR	1	1/PP	9	3						DP1600		
41306259000	FLG-GP-3GTO25	1	1/P	11	26								
41306260000	LOCK-WALL-R	1	1/P	18	8								
41306261000	LVR-LOC-WALL-R	1	1/P	18	7								
41306264000	SEAL-TONER	3	5/P	24	21	A	-	J	G01J733		DP1600S/2000S/2500S (NAD, MJD, AUD, ASD, SAD, TWD)		
41306272000	GEAR-RLR-GUIDE	1	1/P	7	13								MSP
41306282000	SHUTTER-CLN-N	1	1/P	23	66	A	-	J	G01J733		DP1600S/2000S/2500S (NAD, MJD, AUD, ASD, SAD, TWD)		
41306284000	LOCK-CART-TNR	1	1/P	13	23								
41306287000	COLLAR	1	5/P	23	5	A	-	J	G01J733		DP1600S/2000S/2500S (NAD, MJD, AUD, ASD, SAD, TWD)		
41306288000	GUIDE-ROD	1	1/P	23	74	A	-	J	G01J733		DP1600S/2000S/2500S (NAD, MJD, AUD, ASD, SAD, TWD)		
41306289000	COV-GUIDE-ROD-F	1	1/P	23	3	A	-	J	G01J733		DP1600S/2000S/2500S (NAD, MJD, AUD, ASD, SAD, TWD)		
41306290000	COV-GUIDE-ROD-R	1	1/P	23	4	A	-	J	G01J733		DP1600S/2000S/2500S (NAD, MJD, AUD, ASD, SAD, TWD)		
41306291000	LINK-SHTR	1	1/P	23	72	A	-	J	G01J733		DP1600S/2000S/2500S (NAD, MJD, AUD, ASD, SAD, TWD)		
41306293000	WAS-PUSH-SHTR	1	10/P	7	25								
41306294000	BUSH-PUSH-SHTR	1	1/P	15	26								
41306295000	LEVER-PUSH-SHTR	1	1/P	7	26								
41306296000	STOPPER-REAR	1	1/P	2	10								
41306299000	NOZZLE-DEV	1	1/P	24	34	A	-	J	G01J733		DP1600S/2000S/2500S (NAD, MJD, AUD, ASD, SAD, TWD)		
41306301000	COLLER-RLR-GUID	2	5/P	7	15								
41306302000	GEAR-EXIT-8	1	1/P	8	31								
41306303000	GEAR-EXIT-9	1	1/P	8	30								
41306306000	HANDLE-PU-N	1	1/P	23	1	A	-	J	G01J733		DP1600S/2000S/2500S (NAD, MJD, AUD, ASD, SAD, TWD)		
41306307000	DUCT-UPPER-SIDE	1	1/P	13	1								
41306308000	DUCT-LOWER-SIDE	1	1/P	13	2								
41306309100	ROLLER-DEV-GAP	2	1/KP	24	53	A	-	J	G01J733		DP1600S/2000S/2500S (NAD, MJD, AUD, ASD, SAD, TWD)		
41306312000	GEAR-AUGER-DEV	1	1/P	24	28	A	-	J	G01J733		DP1600S/2000S/2500S (NAD, MJD, AUD, ASD, SAD, TWD)		
41306313000	GEAR-IDLER-G	1	1/P	24	25	A	-	J	G01J733		DP1600S/2000S/2500S (NAD, MJD, AUD, ASD, SAD, TWD)		
41306314000	GEAR-IDLER-H	1	1/P	24	27	A	-	J	G01J733		DP1600S/2000S/2500S (NAD, MJD, AUD, ASD, SAD, TWD)		
41306315000	GEAR-IDLER-J	1	1/P	24	26	A	-	J	G01J733		DP1600S/2000S/2500S (NAD, MJD, AUD, ASD, SAD, TWD)		
41306323000	COLLER-DRUM	2	5/P	7	14								
41306325000	WHEEL-CLN-8	3	1/P	23	6	A	-	J	G01J733		DP1600S/2000S/2500S (NAD, MJD, AUD, ASD, SAD, TWD)		
41306326000	GUIDE-CART	1	1/P	14	11								
41306327000	GEAR-RLR-MG-B	1	1/P	24	11	A	-	J	G01J733		DP1600S/2000S/2500S (NAD, MJD, AUD, ASD, SAD, TWD)		
41306328000	GUIDE-EXIT-JOIN	1	1/P	8	11								
41306329000	BUSH-HRD	1	5/P	11	23								
		1	5/P	11	23A	-	-	-	G01C317		DP1600		
41306331000	CPG-PU	1	1/P	11	44								
41306332000	PLY/T-60S2M	1	1/P	11	43								
		1	1/P	11	43A	-	-	-	G01C317		DP1600		
41306333000	PLY/T-45S2M	1	1/P	23	41	A	-	J	G01J733		DP1600S/2000S/2500S (NAD, MJD, AUD, ASD, SAD, TWD)		
41306334000	RLR-IDLER-DEV	1	1/P	23	39	A	-	J	G01J733		DP1600S/2000S/2500S (NAD, MJD, AUD, ASD, SAD, TWD)		

PARTS NO.	PARTS NAME	Q'TY / PAGE	Q'TY / PACK	PAGE	ITEM NO.	P	I	R	BSI NO.	SERIAL NO.	REMARKS	LOCATION	C
41306335000	RLR-DRV-TSN	1	1/P	11	40								
		1	1/P	11	40A				G01C317		DP1600		
41306336000	GEAR-DRV-EX-JSP	1	1/P	8	44								
41306341000	GEAR-HR/RLR	1	1/P	9	9						DP1600		
		1	1/P	22	9	A	-	J	G01C317		DP2000/2500		
41306344000	HOOK-PU	1	1/P	23	52	A	-	J	G01J733		DP1600S/2000S/2500S (NAD, MJD, AUD, ASD, SAD, TWD)		
41306345000	HOOK-PU-SUPPORT	1	1/P	23	53	A	-	J	G01J733		DP1600S/2000S/2500S (NAD, MJD, AUD, ASD, SAD, TWD)		
41306347000	FRAME-GEAR	1	1/P	11	3-1								
		1	1/P	11	3A				G01C317		DP1600		
41306348000	CVR-EXIT-UNIT	1	1/PP	8	1								
41306350000	DRUM-SHUTTER	1	1/P	23	71	A	-	J	G01J733		DP1600S/2000S/2500S (NAD, MJD, AUD, ASD, SAD, TWD)		
41306351000	COV-OPE-LOW	1	1/PP	6	2-1								
41306352000	GUIDE-TC	1	1/P	7	8-1								
41306354000	HLDR-RLR-EXIT-F	2	1/P	8	50B	A	-	J	G01C317		DP2000/2500		
41306355000	HLDR-RLR-EXIT-R	2	1/P	8	51B	A	-	J	G01C317		DP2000/2500		
41306356000	RLR-GUIDE-EXIT	8	1/P	8	52B	A	-	J	G01C317		DP2000/2500		
41306357000	GATE-EXIT-AW	10	1/P	8	16B	A	-	J	G01C317		DP2000/2500		
41306358000	GATE-EXIT-AW-2	2	1/P	8	49B	A	-	J	G01C317		DP2000/2500		
41306359000	ACTR-EXT-SEN-AW	1	1/P	8	18B	A	-	J	G01C317		DP2000/2500		
41306360000	BUSH-PR-RLR	2	5/P	9	11-1						DP1600		
41306362000	COV-RIGHT-RT	1	1/PP	2	6-1	C	E	J	G01C334				
41306363000	COV-RIGHT-RB	1	1/PP	2	20	C	E	J	G01C334				
41306364000	BUSH-RLR-EXIT	2	5/P	8	54B	A	-	J	G01C317		DP2000/2500		
41306367000	FRAME-GEAR	1	1/P	11	3A-1	C	B	F	G01C322		DP1600		
41306367100	FRAME-GEAR	1	1/P	11	3B	A	-	J	G01C317		DP2000/2500		
41306376000	COV-REAR	1	1/PP	2	1-2	C	B	J	G01F522				
41306377000	COV-OPEN-S	1	1/PP	1	6D	A	-	J	G01J733		DP1600S (NAD, MJD, AUD, ASD, SAD, TWD)		
41306377100	COV-OPEN-S	1	1/PP	1	6E	A	-	J	G01J733		DP2000S (NAD, MJD, AUD, ASD, SAD, TWD)		
41306377200	COV-OPEN-S	1	1/PP	1	6F	A	-	J	G01J733		DP2500S (NAD, MJD, AUD, ASD, SAD, TWD)		
41306379000	PLT-BRK-S	1	1/P	23	69	A	-	J	G01J733		DP1600S/2000S/2500S (NAD, MJD, AUD, ASD, SAD, TWD)		
41306380000	BRKT-WIRE-CHGR	1	1/P	23	33	A	-	J	G01J733		DP1600S/2000S/2500S (NAD, MJD, AUD, ASD, SAD, TWD)		
41306384000	SCRAPER-DRUM-S	3	3/P	23	7	A	-	J	G01J733		DP1600S/2000S/2500S (NAD, MJD, AUD, ASD, SAD, TWD)		MSP
41306386000	GER-IDLE-MID-29	1	1/P	12	27	A	-	D	G01J709				
41306501000	FOOT-MAIN-AT	2	1/P	19	16								
41306502000	BLT/T-124-2GT-2	1	1/P	17	22								
41306504000	BLT/T-194-2GT-2	1	1/P	17	20								
41306506000	CLUTCH-8K-CCW-6	1	1/C	12	15								
41306508000	CLUTCH-8K-CW-6	1	1/C	17	3								
41306509000	ROLLER-2ND	1	1/P	16	15								
41306510000	ROLLER-2ND-P	1	1/P	16	14								
41306511000	BLT/T-309-3GT-4	1	1/P	12	14								
41306513000	M/DC-TRAY-CST	1	1/C	12	4								
41306517000	CUSH-TRAY-CST	3	1/P	18	3								
41306518000	FAN-EXHAUST	2	1/D	13	5								
41306525000	STOPPER	1	1/P	2	13								
41306526000	ROLLER-REGIST	1	1/KP	15	7								
41306527000	CLUTCH-8K-CCW-8	1	1/C	15	3								
41306528000	SHEET-DEFENSE-R	1	1/P	7	6								MSP
41306529000	SHEET-DEFENSE-F	1	1/P	7	7								MSP
41306530000	ROLLER-GUIDE	1	1/KP	7	16								MSP
41306532000	THERMO-FUSER	1	1/C	9	30						DP1600		
41306533000	BRUSH-FUSER-P	1	1/KP	9	23						DP1600		
		1	1/KP	22	23	A	-	J	G01C317		DP2000/2500		
41306546000	SEAL-SLEEVE-L	1	5/P	24	46	A	-	J	G01J733		DP1600S/2000S/2500S (NAD, MJD, AUD, ASD, SAD, TWD)		
41306549000	SEAL-BRKT-FR	2	5/P	24	47	A	-	J	G01J733		DP1600S/2000S/2500S (NAD, MJD, AUD, ASD, SAD, TWD)		
41306550000	SEAL-CASE-FR	1	5/P	24	9	A	-	J	G01J733		DP1600S/2000S/2500S (NAD, MJD, AUD, ASD, SAD, TWD)		
41306551000	SEAL-CASE-SIDE	2	5/P	24	51	A	-	J	G01J733		DP1600S/2000S/2500S (NAD, MJD, AUD, ASD, SAD, TWD)		
41306552000	SEAL-CASE-REAR	1	5/P	24	10	A	-	J	G01J733		DP1600S/2000S/2500S (NAD, MJD, AUD, ASD, SAD, TWD)		

PARTS NO.	PARTS NAME	Q'TY / PAGE	Q'TY / PACK	PAGE	ITEM NO.	P	I	R	BSI NO.	SERIAL NO.	REMARKS	LOCATION	C
41306553000	SEAL-BRKT-REAR	2	5/P	24	50	A	-	J	G01J733		DP1600S/2000S/2500S (NAD, MJD, AUD, ASD, SAD, TWD)		
41306562000	SEAL-SLEEVE-R	1	5/P	24	49	A	-	J	G01J733		DP1600S/2000S/2500S (NAD, MJD, AUD, ASD, SAD, TWD)		
41306564000	WASHER-THRUST	1	5/P	24	12	A	-	J	G01J733		DP1600S/2000S/2500S (NAD, MJD, AUD, ASD, SAD, TWD)		
41306565000	SEAL-CLN-A	1	1/KP	23	27	A	-	J	G01J733		DP1600S/2000S/2500S (NAD, MJD, AUD, ASD, SAD, TWD)		
41306566000	SCRPR-PADDLE	1	1/KP	23	20	A	-	J	G01J733		DP1600S/2000S/2500S (NAD, MJD, AUD, ASD, SAD, TWD)		
41306567000	BUSH-0508*04-M	2	5/P	23	12	A	-	J	G01J733		DP1600S/2000S/2500S (NAD, MJD, AUD, ASD, SAD, TWD)		
41306568000	SEAL-CLN-U	2	5/P	23	23	A	-	J	G01J733		DP1600S/2000S/2500S (NAD, MJD, AUD, ASD, SAD, TWD)		
41306569000	SEAL-CLN-L	2	5/P	23	24	A	-	J	G01J733		DP1600S/2000S/2500S (NAD, MJD, AUD, ASD, SAD, TWD)		
41306575000	SHEET-RECOV	1	1/KP	23	25	A	-	J	G01J733		DP1600S/2000S/2500S (NAD, MJD, AUD, ASD, SAD, TWD)		MSP
41306589000	FILM-SW-OPE	1	1/KP	6	19								
41306590000	FILM-LCD	1	1/C	6	20								
41306591000	FILM-SW-COPY	1	1/KP	6	21								
41306611000	BRKT-CLN-F	1	1/P	23	26	A	-	J	G01J733		DP1600S/2000S/2500S (NAD, MJD, AUD, ASD, SAD, TWD)		
41306612000	BRKT-CLN-R	1	1/P	23	22	A	-	J	G01J733		DP1600S/2000S/2500S (NAD, MJD, AUD, ASD, SAD, TWD)		
41306613000	M/DC-TNR-AT5	1	1/C	10	41								
		1	1/C	10	41A	-	-	-	G01C317		DP1600		
		1	1/C	14	2								
		1	1/C	14	2A	-	-	-	G01C317		DP1600		
41306614000	CUSH-LVR-LIFT	1	5/P	18	18								
41306623000	BUSH-D6*7-GCB	2	5/P	15	8								
41306628000	SHEET-P/U-GUIDE	6	5/P	15	15								
41306663000	SEAL-BRKT-CLN	4	5/P	23	21	A	-	J	G01J733		DP1600S/2000S/2500S (NAD, MJD, AUD, ASD, SAD, TWD)		
41306674000	ZPAN-BLADE-DCT	3	10/P	24	102	A	-	J	G01J733		DP1600S/2000S/2500S (NAD, MJD, AUD, ASD, SAD, TWD)		
41306677000	BUSH-RLR-GUIDE	2	1/P	7	12								MSP
41306678000	SPACER-10*8.1	2	5/P	24	41	A	-	J	G01J733		DP1600S/2000S/2500S (NAD, MJD, AUD, ASD, SAD, TWD)		
41306684000	OT-SENSOR-TNR	1	1/C	24	31	A	-	J	G01J733		DP1600S/2000S/2500S (NAD, MJD, AUD, ASD, SAD, TWD)		
41306692000	LBL/O-PAPER	1	5/P	18	24								
41306694000	LBL/O-P-MAX	1	5/P	18	6								
41306696000	LBL/O-LD	1	5/P	18	22								
41306698000	LBL/O-GUIDE	1	1/KP	18	23								
41306705000	SHEET-CST	1	1/KP	18	27B						A4		
41306706000	SHEET-CST-US	1	1/KP	18	27A						LT		
41306710000	LID-SCREW-G	3	1/P	2	18								
41306712000	DAMPER	2	5/P	7	10								
41306717000	SEAL-EX-TNR-DEV	1	5/P	24	38	A	-	J	G01J733		DP1600S/2000S/2500S (NAD, MJD, AUD, ASD, SAD, TWD)		
41306719000	ROLLER-PICK-AT	1	1/P	17	15								MSP
41306720000	LBL/W-LASER	1	1/KP	15	17								
41306746000	FILTER-OZON-S	1	1/PP	1	13								MSP
41306774000	K-BASE-CRG-1	1	1/P	5	3								
41306775000	K-BASE-CRG-2	1	1/P	5	24								
41306778000	K-BKT-DRV	1	1/P	4	15								
41306782000	BKT-WIRE-HOLD	2	1/P	5	31								
41306783000	BKT-MOT-S	1	1/P	4	16								
41306784000	REFRECTER-XL	1	1/PP	5	8								
41306785000	BKT-WIRE	2	1/P	5	5								
41306786000	BKT-SENS	1	1/P	5	10								
41306787000	SFT-GUARD	1	1/P	4	6								
41306788000	BKT-HOLD-CBL	1	1/P	5	32								
41306789000	COVER-SLG-AT	1	1/P	4	1								
		1	1/P	4	1A	-	-	-	G01C317		DP1600		
41306790000	BKT-INV-AT	1	1/P	4	21								
		1	1/P	4	21A	-	-	-	G01C317		DP1600		
41306791000	BKT-C-STOP	2	1/P	3	4								
41306792000	BKT-ADF	1	1/P	4	19								
41306793000	HOLD-GUIDE-REAR	1	1/P	3	5								
41306794000	BKT-LH-HOLD	1	1/P	5	11								

PARTS NO.	PARTS NAME	Q'TY / PAGE	Q'TY / PACK	PAGE	ITEM NO.	P	I	R	BSI NO.	SERIAL NO.	REMARKS	LOCATION	C
41306795000	LVR-OPEN	1	1/P	4	24								
41306796000	BKT-OPEN	1	1/P	4	26								
41306797000	SLIDE-BUSH-CRG1	2	5/P	5	4								
41306798000	SLIDE-BUSH-CRG2	2	5/P	5	23								
41306799000	PLY-TURN	1	1/P	5	28								
41306800000	BKT-TURN	1	1/P	5	27								
41306801000	GUIDE-RIGHT	1	1/P	3	2								
41306803000	FLANGE-S-PLY	1	1/P	4	10								
		0	1/P	4	10-1	B	-	J	G01I686				
41306804000	COVER-C-STOP	2	1/P	3	3								
41306806000	SFT-DV	4	1/P	5	29								
41306807000	DRIVE-SFT-PLY	1	1/P	5	16								
41306808000	SPRING-OPEN	1	1/P	4	25								
41306810000	WIRE-Z-F	1	1/P	5	15								
41306811000	WIRE-S-B	1	1/P	5	17								
41306812000	CUSHION-CBL	1	5/P	5	35								
		0	5/P	5	35-1	B	-	D	G01I676				
41306813000	BRG-DV-19	8	1/P	5	21								
41306814000	PLY-T-S1.5M84	1	1/P	5	13								
41306815000	PPS15M83/S15M33	1	1/P	4	13								
		0	1/P	4	13-1	B	-	J	G01I686				
41306824000	SHEET-FILM-CABL	1	1/KP	5	25								
41306827000	BELT-ST1095060	1	1/P	4	11								
41306828000	BELT-ST1105060	1	1/P	5	14								
41306829000	CLIP-4	1	5/P	4	27								
41306830000	SLIDER-CRG2-C	1	1/P	5	20								
41306831000	BKT-DH-L	1	1/P	4	36						AUD, ASD, SAD, TWD/CND		
41306832000	SRW-020080	3	5/P	5	55								
41306834000	SPL-MIRROR-1-F	2	1/P	5	6								
41306835000	BKT-AJ-CRG1	1	1/P	5	7								
41306837000	SPL-MIRROR-2-F	2	1/P	5	22								
41306838000	SPL-MIRROR-2-R	2	1/P	5	26								
41306866000	SEAL-BUSH-AGITA	2	5/P	24	19	A	-	J	G01J733		DP1600S/2000S/2500S (NAD, MJD, AUD, ASD, SAD, TWD)		
41306867000	WASHER-THRUST-B	1	5/P	24	29	A	-	J	G01J733		DP1600S/2000S/2500S (NAD, MJD, AUD, ASD, SAD, TWD)		
41306871000	BELT-COUPLER-PU	1	1/P	11	42								
41306872000	BELT-RLR-MG	1	1/P	23	42	A	-	J	G01J733		DP1600S/2000S/2500S (NAD, MJD, AUD, ASD, SAD, TWD)		
41306873000	SEAL-SIDE-DEV	1	5/P	24	37	A	-	J	G01J733		DP1600S/2000S/2500S (NAD, MJD, AUD, ASD, SAD, TWD)		
41306891000	SEAL-BRKT-DEV	2	5/P	24	48	A	-	J	G01J733		DP1600S/2000S/2500S (NAD, MJD, AUD, ASD, SAD, TWD)		
41306911000	SPE-TENS-WIRE	1	1/P	20	1						2 pcs. should be required for adjustment		
		1	1/P	20	3-1	E	-	J	G01E455				
41306912000	SPE-TENS-BELT	1	1/P	20	4								
41306913000	JIG-CCDUNIT-AT	1	1/P	20	2								
41306915000	ASM-HLD-W-AT	1	1/P	20	1-1	E	-	J	G01E455		2 pcs. should be required for adjustment		
		1	1/P	20	3								
41306916000	SCREW-SPEAKER	1	10/P	10	49								
		1	10/P	22	40	A	-	J	G01C317		DP2000/2500		
41306917000	SHEET-CST	1	1/KP	18	25								
41306941000	WASHER-SHTR	1	10/P	15	23								
41306953000	FILM-PICK-UP	1	1/KP	17	14								
41306954000	LBL/W-HV	1	5/P	11	48								
41306960000	SHEET-COVER	1	1/KP	24	2	A	-	J	G01J733		DP1600S/2000S/2500S (NAD, MJD, AUD, ASD, SAD, TWD)		
41306961000	SHEET-COV-SIDE	1	1/KP	7	19								
41306969000	SHEET-P/U-G-R	1	1/P	15	16								
41306975000	SEAL-CASE-D-FR	2	5/P	24	45	A	-	J	G01J733		DP1600S/2000S/2500S (NAD, MJD, AUD, ASD, SAD, TWD)		
41306991000	LBL/O-PU-HANDLE	1	5/P	23	2	A	-	J	G01J733		DP1600S/2000S/2500S (NAD, MJD, AUD, ASD, SAD, TWD)		
41307511000	SHEET-FUS	1	1/KP	9	38						DP1600		
		0	1/KP	9	38-1	B	-	D	G01K772		DP1600		
41307538000	SRW-2.6X6P TITE	2	5/P	23	104	A	-	J	G01J733		DP1600S/2000S/2500S (NAD, MJD, AUD, ASD, SAD, TWD)		
41307557000	PLT-NOISE-UR	1	1/P	4	43B	A	-	J	G01C317		DP2000/2500(AUD, ASD, SAD, TWD/CND)		
41307561000	SHEET-FILM-LOW	1	1/P	4	41						AUD, ASD, SAD, TWD/CND		
		1	1/P	4	41A	-	-	-	G01C317		DP1600		

PARTS NO.	PARTS NAME	Q'TY / PAGE	Q'TY / PACK	PAGE	ITEM NO.	P	I	R	BSI NO.	SERIAL NO.	REMARKS	LOCATION	C
		1	1/P	4	41B	A	-	J	G01C317		DP2000/2500(NAD,MJD)		
41307580000	SHEET-COVER-B	1	5/P	24	3	A	-	J	G01J733		DP1600S/2000S/2500S (NAD,MJD,AUD,ASD,SAD,TWD)		
41307588000	SHEET-PUG-LIB1	1	1/KP	15	37								
41307589000	SPACER-FRM-FEED	1	5/P	17	29								
41307590000	LBL/O-JAM-TSB	1	5/P	9	2						DP1600		
		1	5/P	9	2A	-	-	-	G01J708		DP1600 NAD,MJD,AUD,ASD,SAD,CND		
		1	5/P	22	2	A	-	J	G01C317		DP2000/2500		
		1	5/P	22	2A	-	-	-	G01J708		DP2000/2500 NAD,MJD,AUD,ASD,SAD,CND		
41307591000	LBL/O-T/C-TSB	1	5/P	1	19								
41307599000	SHEET-CST	1	1/KP	18	25-1	E	B	J	G01B232				
41307607000	SHEET-CST-CN	1	1/KP	18	27C						8K/16K		
41307652000	K-BRUSH-EXIT	1	1/KP	8	2-1								
41307698000	WAS-CLN	2	5/P	23	10	A	-	J	G01J733		DP1600S/2000S/2500S (NAD,MJD,AUD,ASD,SAD,TWD)		
41307699000	SEAL-PADDLE-CLN	3	5/P	23	11	A	-	J	G01J733		DP1600S/2000S/2500S (NAD,MJD,AUD,ASD,SAD,TWD)		
41307700000	LBL/O-T/C-TSB	1	5/P	1	19-1	C	B	J	G01B283				
41307701000	LBL/O-P-MAX	1	5/P	18	6-1	C	B	J	G01B283				
41307702000	LBL/O-PAPER	1	5/P	18	24-1	C	B	J	G01B283				
41307703000	LBL/O-GUIDE	1	1/KP	18	23-1	C	B	J	G01B283				
41307704000	LBL/O-LD	1	5/P	18	22-1	C	B	J	G01B283				
41307713000	SHEET-COVER-C	1	5/P	24	4	A	-	J	G01J733		DP1600S/2000S/2500S (NAD,MJD,AUD,ASD,SAD,TWD)		
41307726000	SEAL-BLADE-R2	1	5/P	24	7	A	-	J	G01J733		DP1600S/2000S/2500S (NAD,MJD,AUD,ASD,SAD,TWD)		
41307736000	SPACER-DEV-SIDE	2	5/P	24	44	A	-	J	G01J733		DP1600S/2000S/2500S (NAD,MJD,AUD,ASD,SAD,TWD)		
41307750000	FILM-CRG2	2	5/P	5	42	A	B	J	G01B285				
41307758000	LBL/O-PU	1	5/P	23	46	A	-	J	G01J733		DP1600S/2000S/2500S (NAD,MJD,AUD,ASD,SAD,TWD)		
41307761000	BRG-LF1280LY13	2	1/P	24	14	A	-	J	G01J733		DP1600S/2000S/2500S (NAD,MJD,AUD,ASD,SAD,TWD)		
41307775000	ASM-PG-G/P-AB	1	1/C	3	1B-1	C	B	J	G01C347		MJD,AUD,ASD,SAD		
41307775100	ASM-PG-G/P-INCH	1	1/C	3	1A-1	C	B	J	G01C347		NAD		
41307775200	ASM-PG-G/P-ABK	1	1/C	3	1C-1	C	B	J	G01C347		TWD/CND		
41307832000	LBL/O-TEL-TWD	1	5/P	2	22C	A	-	J	G01J708		TWD		
41307833000	LBL/O-JAM-TWD	1	5/P	9	2C	F	-	J	G01J708		DP1600 TWD		
		1	5/P	22	2C	F	-	J	G01J708		DP2500 TWD		
41307834000	LBL/W-LASER-TWD	1	5/P	15	40D	A	-	J	G01J708		TWD		
41307879100	ZPANS26*05ZN3A	2	10/P	14	51-1	C	B	D	G01I677				
41307886000	PAD-BRK-DRUM-3	1	5/P	23	68	A	-	J	G01J733		DP1600S/2000S/2500S (NAD,MJD,AUD,ASD,SAD,TWD)		
41307887000	WIRE-CHG-S	1	1/P	23	31	A	-	J	G01J733		DP1600S/2000S/2500S (NAD,MJD,AUD,ASD,SAD,TWD)		MSP
41307889000	COVER-SLG-AT	1	1/PP	4	1A-1	C	B	F	G01I675		DP1600		
41307899000	ROLLER-MG-S	1	1/KP	24	52	A	-	J	G01J733		DP1600S/2000S/2500S (NAD,MJD,AUD,ASD,SAD,TWD)		
41307903000	K-CBL-HOLD	1	1/P	5	32-1	C	B	D	G01I676				
41307944000	K-JIG-DC-SL	1	1/P	20	16	A	-	J	G01J733		DP1600S/2000S/2500S (NAD,MJD,AUD,ASD,SAD,TWD)		
41308001000	MEM-F-NAD-AW	1	1/SB	10	6C	A	-	J	G01C317		DP2500 NAD,MJD,AUD,ASD,SAD,CND		
		1	1/SB	51	0C	A	-	J	G01C317		DP2500 NAD,MJD,AUD,ASD,SAD,CND		
41308008000	MEM-F-NAD-DM20	1	1/SB	10	6B	A	-	J	G01C317		DP2000		
		1	1/SB	51	0B	A	-	J	G01C317		DP2000		
41308023000	MEM-F-TWD-AW	1	1/SB	10	6E	F	-	J	G01J708		DP2500 TWD		
		1	1/SB	51	0E	F	-	J	G01J708		DP2500 TWD		
41309001000	WH-MDM-AW	1	1/P	10	33B	A	-	J	G01C317		DP2000/2500		
41309004000	WH-LVPS-AW	1	1/P	10	36B	A	-	J	G01C317		DP2000/2500		
		1	1/P	13	13B	A	-	J	G01C317		DP2000/2500		
41309010000	WH-FIN-RELAY	1	1/P	10	54B	A	-	J	G01C317		DP2000/2500		
41309012000	THMS-HTR-25	1	1/C	9	35						DP1600		
		1	1/C	22	35	A	-	J	G01C317		DP2000/2500		
41309017000	PWA-F-SLG-AW	1	1/SB	4	5B	A	-	J	G01C317		DP2000/2500		
41309018000	WH-SCN-ADF-AW	1	1/P	4	2B	A	-	J	G01C317		DP2000/2500		
41309019000	LP-EXPO-AW	1	1/C	5	2B	A	-	J	G01C317		DP2000/2500		
41309020000	INV-EXPO-AW	1	1/C	4	20B	A	-	J	G01C317		DP2000/2500		
41309022000	PS-LVPS-AW	1	1/C	13	14C	A	-	J	G01C317		DP2000/2500(120V)		
		1	1/C	13	14C-1	-	-	-	G01J708		DP2000/2500(NAD,SAD)		
41309022100	PS-LVPS-AW	1	1/C	13	14D	A	-	J	G01C317		DP2000/2500(220V)		
41309022200	PS-LVPS-AW(TW)	1	1/C	13	14F	F	-	J	G01J708		DP2500 TWD		

PARTS NO.	PARTS NAME	Q'TY / PAGE	Q'TY / PACK	PAGE	ITEM NO.	P	I	R	BSI NO.	SERIAL NO.	REMARKS	LOCATION	C
41309023000	GSKT-300281	1	1/P	4	34B	A		J	G01C317		DP2000/2500		
41309025000	WH-FIN-IPC-CORE	1	1/P	13	41B	A		J	G01C317		DP2000/2500		
41309026000	WH-LD-CORE-AW	1	1/P	10	9B	A		J	G01C317		DP2000/2500		
		1	1/P	13	16B	A		J	G01C317		DP2000/2500		
41309035000	M/DC-TNR-AW	1	1/C	10	41B	A		J	G01C317		DP2000/2500		
		1	1/C	14	2B	A		J	G01C317		DP2000/2500		
41309038000	WH-PCIF-TW-AW	1	1/P	10	5C	F		J	G01J708		DP2500 TWD		
41311008000	PU-1600S	1	1/S	1	16G	F		J	G01K784		DP1600S/2000S/2500S (NAD)		PU
41311008100	PU-1600DS	1	1/S	1	16H	F		J	G01K784		DP1600S/2000S/2500S(ASD, AUD, TWD, SAD)		PU
41311008300	PU-1600ES	1	1/S	1	16I	F		J	G01K784		DP1600S/2000S/2500S (MJD)		PU
41311013000	ASM-PG-CRG1-AW	1	1/C	5	1B	E	B	J	G01J735		DP2000/2500		
41311530000	ASM-DEV-UNIT-S	1	1/C	23	45	A		J	G01J733		DP1600S/2000S/2500S (NAD, MJD, AUD, ASD, SAD, TWD)		
41311531000	ASM-CASE-CHGR-S	1	1/PP	23	29	A		J	G01J733		DP1600S/2000S/2500S (NAD, MJD, AUD, ASD, SAD, TWD)		
41311535300	FUSER-2500-120	1	1/S	22	1A-2	C	B	D	G01K772		DP2000/2500(NAD, SAD)		USP
41311535400	FUSER-2500-240	1	1/S	22	1B-1	C	B	D	G01K772		DP2000/2500(240V)		USP
41311535500	FUSER-2500-TWD	1	1/S	22	1C-1	C	B	D	G01K772		DP2500 TWD		USP
41312002000	K-M/DC-MAIN-AW	1	1/C	11	50B	A		J	G01C317		DP2000/2500		
41312017000	K-HOLDER-THERM	1	1/P	22	47	A		J	G01C317		DP2000/2500		
41312018000	K-HSG-PR/RLR-AW	1	1/KP	22	4	A		J	G01C317		DP2000/2500		
41312019000	K-HSG-HR/RLR-AW	1	1/KP	22	33	A		J	G01C317		DP2000/2500		
41312021100	K-PLT-GEAR-AW	1	1/P	11	31B	A		J	G01C317		DP2000/2500		
41312027000	K-FRAME-HR-F-AW	1	1/P	22	22	A		J	G01C317		DP2000/2500		
41312028000	K-FRAME-HR-R-AW	1	1/P	22	14	A		J	G01C317		DP2000/2500		
41312029000	K-PL-GEAR-MG-B	1	1/P	23	43	A		J	G01J733		DP1600S/2000S/2500S (NAD, MJD, AUD, ASD, SAD, TWD)		
41312030000	K-COV-PU-F-UNDR	1	1/PP	23	50A	A		J	G01J733		DP1600S/2000S/2500S (AUD, ASD, SAD, TWD)		
41312030100	K-COV-PU-F-UNDR	1	1/PP	23	50B	A		J	G01J733		DP1600S/2000S/2500S (NAD)		
41312030200	K-COV-PU-F-UNDR	1	1/PP	23	50C	A		J	G01J733		DP1600S/2000S/2500S (MJD)		
41312032000	K-COV-DRUM-SUB	1	1/PP	23	59	A		J	G01J733		DP1600S/2000S/2500S (NAD, MJD, AUD, ASD, SAD, TWD)		
41312033000	K-GRID-13	1	1/KP	23	30	A		J	G01J733		DP1600S/2000S/2500S (NAD, MJD, AUD, ASD, SAD, TWD)		MSP
41312034000	K-AUGER-DEV-S	1	1/P	24	39	A		J	G01J733		DP1600S/2000S/2500S (NAD, MJD, AUD, ASD, SAD, TWD)		
41312035000	K-TERM-CHGR-R-S	1	1/P	23	34	A		J	G01J733		DP1600S/2000S/2500S (NAD, MJD, AUD, ASD, SAD, TWD)		
41312042000	K-COV-DRUM-MAIN	1	1/PP	23	17	A		J	G01J733		DP1600S/2000S/2500S (NAD, MJD, AUD, ASD, SAD, TWD)		
41312508000	STUD-CLN-S	2	1/P	23	56	A		J	G01J733		DP1600S/2000S/2500S (NAD, MJD, AUD, ASD, SAD, TWD)		
41313003000	COVER-SLG-AW	1	1/P	4	1B	A		J	G01C317		DP2000/2500		
41313008000	BRKT-HTR-2	1	1/P	22	41	A		J	G01C317		DP2000/2500		
41313009000	SPL-LAMP-AW	1	1/P	22	32	A		J	G01C317		DP2000/2500		
41313010000	STAY-HF-SENS-AW	1	1/P	22	39	A		J	G01C317		DP2000/2500		
41313013000	CASE-DC	1	1/P	14	24B	A		J	G01C317		DP2000/2500		
41313017000	ARM-HOL-R-AW	1	1/P	22	43	A		J	G01C317		DP2000/2500		
41313018000	ARM-HOL-F-AW	1	1/P	22	44	A		J	G01C317		DP2000/2500		
41313019000	PLT-HR-DRV-AW	1	1/P	11	20B	A		J	G01C317		DP2000/2500		
41313021000	PLATE-FUSER	1	1/P	14	22B	A		J	G01C317		DP2000/2500		
41313022000	PL-M/DC-TS-ATAW	1	1/P	14	3A-1	C	B	F	G01C305		DP1600		
		1	1/P	14	3B	A		J	G01C317		DP2000/2500		
41313026000	BRKT-HTR-1	1	1/P	22	7	A		J	G01C317		DP2000/2500		
41313031000	GUIDE-PR/FU-AW	1	1/P	22	20	A		J	G01C317		DP2000/2500		
41313034000	PLATE-LVR-R-AW	1	1/P	22	12	A		J	G01C317		DP2000/2500		
41313035000	PLATE-LVR-F-AW	1	1/P	22	24	A		J	G01C317		DP2000/2500		
41313501000	SPE-P/R-CLN-AW	1	5/P	15	39B	A		J	G01C317		DP2000/2500		
41313502000	SPL-GRID	1	1/P	11	49B	A		J	G01C317		DP2000/2500		
41313503000	SPRING-EXIT-F-2	1	5/P	8	37B	A		J	G01C317		DP2000/2500		
41313504000	SPRING-EXIT-R-2	1	5/P	8	36B	A		J	G01C317		DP2000/2500		
41313505000	SPL-CHGR	2	5/P	23	60	A		J	G01J733		DP1600S/2000S/2500S (NAD, MJD, AUD, ASD, SAD, TWD)		
41313506000	SPRING-MAIN-TWA	1	5/P	10	58E	A		J	G01J708		DP2500 TWD		
41313507000	SPL-GRID-AW5-N	1	5/P	11	49B-1	C	B	D	G01K773		DP2000/2500		
41314003000	GER-19M142M1-AW	1	1/P	11	39B	A		J	G01C317		DP2000/2500		
41314005000	GER-45M629M1-AW	1	1/P	11	37B	A		J	G01C317		DP2000/2500		
41314006000	PULLEY-56S2M	1	1/P	11	43B	A		J	G01C317		DP2000/2500		
41314008000	GEAR-49M06-AW	1	1/P	11	32B	A		J	G01C317		DP2000/2500		
41314009000	BUSH HRD-AW	1	5/P	11	23B	A		J	G01C317		DP2000/2500		

PARTS NO.	PARTS NAME	Q'TY / PAGE	Q'TY / PACK	PAGE	ITEM NO.	P	I	R	BSI NO.	SERIAL NO.	REMARKS	LOCATION	C
41314010000	GER-34M0819M1AW	1	1/P	11	22B	A	-	J	G01C317		DP2000/2500		
41314011000	GEAR-HT/IDLE-AW	1	1/P	22	15	A	-	J	G01C317		DP2000/2500		MSP
41314012000	WHEEL-WORM-AW	1	1/P	14	13B	A	-	J	G01C317		DP2000/2500		
41314013000	HLDR-RLR-SEP	1	1/P	16	9B	A	-	J	G01C317		DP2000/2500		
41314014000	RLR-DRV-TSN-AW	1	1/KP	11	40B	A	-	J	G01C317		DP2000/2500		
41314015000	LEVER-PR-F-AW	1	1/P	22	25	A	-	J	G01C317		DP2000/2500		
41314016000	LEVER-PR-R-AW	1	1/P	22	6	A	-	J	G01C317		DP2000/2500		
41314020000	CAP-AW	1	1/P	22	42	A	-	J	G01C317		DP2000/2500		
41314021000	COVER-PR-AW	1	1/PP	9	3-1	C	B	D	G01J719		DP1600		
		1	1/PP	22	3	A	-	J	G01C317		DP2000/2500		
41314022000	CPG-DRUM-AW5	1	1/P	11	11B	A	-	J	G01C317		DP2000/2500		
41314024000	COV-PU-F-UPPER	1	1/P	23	63	A	-	J	G01J733		DP1600S/2000S/2500S (NAD, MJD, AUD, ASD, SAD, TWD)		
41314026000	COV-PU-R-UPPER	1	1/P	23	15	A	-	J	G01J733		DP1600S/2000S/2500S (NAD, MJD, AUD, ASD, SAD, TWD)		
41314027000	COV-PU-R-UNDR	1	1/PP	23	44	A	-	J	G01J733		DP1600S/2000S/2500S (NAD, MJD, AUD, ASD, SAD, TWD)		
41314028000	GER1-HT/IDLE-AW	1	1/P	22	15-1	C	E	J	G01F523		DP2000/2500		
41314029000	GER2-HT/IDLE-AW	1	1/P	22	51	C	E	J	G01F523		DP2000/2500		
41314030000	BRKT-DRUM	1	1/P	23	64	A	-	J	G01J733		DP1600S/2000S/2500S (NAD, MJD, AUD, ASD, SAD, TWD)		
41314031000	TERM-CHGR-F	1	1/P	23	35	A	-	J	G01J733		DP1600S/2000S/2500S (NAD, MJD, AUD, ASD, SAD, TWD)		
41314505000	BKT-INV-AW	1	1/P	4	21B	A	-	J	G01C317		DP2000/2500		
41314506000	WH-DHT-RELAY-AW	1	1/P	4	39B	A	-	J	G01C317		DP2000/2500(AUD, ASD, SAD, TWD/CND)		
41314507000	SCREW-LOCK-CRG	2	10/P	3	6								
41314524000	FUSER-HARNESS	1	1/P	22	34	A	-	J	G01C317		DP2000/2500		
41314534000	SHEET-FUS-AW	1	1/KP	22	38	A	-	J	G01C317		DP2000/2500		
		0	1/KP	22	38-1	B	-	D	G01K772		DP2000/2500		
41314537000	FILM-1	1	1/KP	22	45	A	-	J	G01C317		DP2000/2500		
		0	1/KP	22	45-1	B	-	D	G01K772		DP2000/2500		
41314538000	FILM-2	1	1/KP	22	46	A	-	J	G01C317		DP2000/2500		
41314539000	BRG-LF126ZZLY13	1	1/P	22	11	A	-	J	G01C317		DP2000/2500		
41314540000	BRG-L-106ZZLY13	2	1/P	8	53B	A	-	J	G01C317		DP2000/2500		
41314547000	FILM-DUCT	1	1/C	14	21B	A	-	J	G01C317		DP2000/2500		
41314548000	SHIELD-DUCT	1	1/KP	14	23B	A	-	J	G01C317		DP2000/2500		
41314571000	SHEET-REAR-AW	1	5/P	22	49	A	-	J	G01C317		DP2000/2500		
41314590000	COVER-SLG-AW	1	1/PP	4	1B-1	C	B	F	G01I675		DP2000/2500		
41314597000	SHEET-1245-TWA	1	1/KP	13	46F	A	-	J	G01J708		DP2500 TWD		
41314600000	WASHER-TURUST-S	1	5/P	24	36	A	-	J	G01J733		DP1600S/2000S/2500S (NAD, MJD, AUD, ASD, SAD, TWD)		
41314607000	SHEET-REAR-AW	1	1/KP	22	49-1	C	B	D	G01K772		DP2000/2500		
41314610000	SEAL-CLN-F-S	1	1/KP	23	19	A	-	J	G01J733		DP1600S/2000S/2500S (NAD, MJD, AUD, ASD, SAD, TWD)		
41314611000	SEAL-CLN-R-S	1	1/KP	23	18	A	-	J	G01J733		DP1600S/2000S/2500S (NAD, MJD, AUD, ASD, SAD, TWD)		
41314612000	TFLP3*08ZN3A	3	10/P	23	107	A	-	J	G01J733		DP1600S/2000S/2500S (NAD, MJD, AUD, ASD, SAD, TWD)		
41315503000	SRW-34-TW	4	5/P	4	57F	A	-	J	G01J708		DP2500 TWD		
41315504000	PL-CCD-SHLD-TW	4	1/P	4	47F	A	-	J	G01J708		DP2500 TWD		
41315505000	CBL/F-FCC-TW	2	1/P	4	7F	F	-	J	G01J708		DP2500 TWD		
41315506000	WH-APS-TW	1	1/P	5	38F	F	-	J	G01J708		DP2500 TWD		
41315507000	BRKT-CCD-SHLD-C	1	1/P	4	46F	A	-	J	G01J708		DP2500 TWD		
41315508000	BRKT-CCD-SHLD-F	1	1/P	4	49F	A	-	J	G01J708		DP2500 TWD		
41315509000	BRKT-CCD-SHLD-R	1	1/P	4	48F	A	-	J	G01J708		DP2500 TWD		
41321477000	STAY-FINISHER	1	1/P	13	42B	A	-	J	G01C317		DP2000/2500		
41335013000	MYLER-SCRAPER	1	5/P	20	17	A	-	J	G01J733		DP1600S/2000S/2500S (NAD, MJD, AUD, ASD, SAD, TWD)		
4346312030	BUSHING	1	5/P	11	19								
		2	5/P	15	6								
4400336190	STOP-RING-8	3	5/P	15	1								
4400395940	CBL/P-INLET-EUR	1	1/P	1	10B						MJD/ASD		
4400494940	CBL/P-INLET-AU	1	1/P	1	10C						AUD		
4400545160	MOLYKOTE-100	1	1/C	20	11	A	-	J	G01J732				
4400683950	COVER-SPE/ARBOR	1	1/P	16	3								
4400884670	PLY-20-ROL	1	1/P	17	17								
4400921880	BRG-1260ZZ-4	1	1/P	4	12								
		0	1/P	4	12-1	B	-	J	G01I686				
4401774650	SPL-GUIDE-P-2	1	1/P	8	47								
4401784210	SPR-1.0-15·60RF	1	5/P	16	4								
4401964270	ARBOR-SPT-R	1	1/P	16	2								

PARTS NO.	PARTS NAME	Q'TY/PAGE	Q'TY/PACK	PAGE	ITEM NO.	P	I	R	BSI NO.	SERIAL NO.	REMARKS	LOCATION	C
4401964290	K-ROLL-SPT	1	1/P	16	5								MSP
4401964360	ARBOR-SPT-F	1	1/P	16	7								
4401964410	K-ROLL-FEED	1	1/P	17	28								MSP
4401966040	G05H-45/G05S-15	1	1/P	12	3								
4401983080	SZ-FED-210	1	1/C	16	12								
4401983230	SZ-LG248L1	1	1/C	8	7								
4402231780	PLY-20-2M	1	1/P	17	16								
4402449900	CBL/P-INLET-UC	1	1/P	1	10A						NAD/SAD		
4402461720	BUSH-8*5.5-GCB	1	5/P	11	2								
4402494070	CBL-INLET-CND	1	1/P	1	10D						CND		
4402833110	CLUTCH-6-L	2	1/P	17	27								
4402953760	CLP/W-EMT-6N	1	5/P	10	51								
4406359320	LBL-ENERGY-T-PS	1	5/P	1	17	F	-	J	G01B232				
4406363680	BRG-1680HH-F	1	1/P	4	14								
		0	1/P	4	14-1	B	-	J	G011686				
		2	1/P	5	30								
4406379920	SNSR-PS-TY1CH56	2	1/D	5	39C	A	-	J	G01C317		DP2000/2500(NAD)		
		1	1/D	5	39D	A	-	J	G01C317		DP2000/2500(MJD, AUD, ASD, SAD, TWD/CND)		
4407015430	P-POWDER-PPT001	1	1/P	20	18	A	-	J	G01J733		DP1600S/2000S/2500S (NAD, MJD, AUD, ASD, SAD, TWD)		
4407734980	BUSH-6-GCB	1	5/P	12	19								
		2	5/P	16	18								
4407933080	ASM-SILICONE-1M	1	1/P	20	12	A	-	J	G01J732				
4407972860	STOP-RING-6-5	2	5/P	8	3								
		1	5/P	11	25								
		5	5/P	12	12								
		1	5/P	14	16								
		1	5/P	15	10								
		1	5/P	16	19								
		9	5/P	17	6								
4407976990	BUSH-D6-GCB	2	1/P	16	17								
4408302710	SPRING-770	2	5/P	16	16								
4408636730	CLUTCH-6-08R	1	1/D	8	29								
		1	1/D	12	18								
4408683480	SZ-GP1A73A	1	1/C	15	33								
		2	1/C	17	13								
44201492000	BUSH-6-POM	4	5/P	8	28								
		2	5/P	14	12								
		4	5/P	17	2								
44201806000	SPC054-045-0170	2	5/P	16	8-1								
44201817000	SPR-1.0-15.60RF	1	5/P	16	4-1	E	B	J	G01K781				
44204540000	LBL-JAM-1	1	5/P	7	32								
44204542000	LBL-JAM-2	1	5/P	8	48								
44205162000	SZ-AJ8R2004ZC	1	1/D	13	19B	C	B	D	G011704		CND		
44205167000	SNSR-PS-TW05	3	1/C	5	40C	A	-	J	G01C317		DP2000/2500(NAD)		
		4	1/C	5	40D	A	-	J	G01C317		DP2000/2500(MJD, AUD, ASD, SAD, TWD/CND)		
44205189000	THRM-CS-7TA-190	1	1/D	9	30-1	C	B	A	G01E477		DP1600		
		1	1/D	22	30	A	-	J	G01C317		DP2000/2500		
4842011062	9HSS30/04MSFB	1	50/P	12	16								
		1	50/P	15	4								
		1	50/P	17	4								
4842040370	TBID3006MSZN3L	7	50/P	2	55	F	-	J	G01B232				
		5	50/P	8	108								
		9	50/P	9	51-1	E	B	J	G01B232		DP1600		
		1	50/P	10	104	F	-	J	G01B232				
		9	50/P	11	109								
		9	50/P	11	109A	-	-	-	G01C317		DP1600		
		6	50/P	11	109B	A	-	J	G01C317		DP2000/2500		
		4	50/P	14	55B	A	-	J	G01C317		DP2000/2500		
		1	50/P	19	54	A	-	E	G01B281				
		10	50/P	22	101	A	-	J	G01C317		DP2000/2500		
4842040495	PTBR30*06MSZN3A	2	50/P	8	101								
		2	50/P	14	56	F	-	J	G011677				
4842040683	TBID30*06MSZN3A	2	50/P	8	104								
		4	50/P	17	51								
4842040685	TBID3008MSZN3A	16	50/P	1	51								
		11	50/P	2	52								
		4	50/P	2	52-1	D	-	J	G01B232				

PARTS NO.	PARTS NAME	Q'TY / PAGE	Q'TY / PACK	PAGE	ITEM NO.	P	I	R	BSI NO.	SERIAL NO.	REMARKS	LOCATION	C
		15	50/P	3	51								
4842040685	TBID3008MSZN3A	1	50/P	6	53								
		2	50/P	7	52								
		6	50/P	8	103								
		9	50/P	9	51								
		21	50/P	10	102								
		20	50/P	10	102-1	D	-	J	G01B232				
		6	50/P	11	106								
		5	50/P	12	51								
		20	50/P	13	53								
		20	50/P	13	53A	-	-	-	G01C317		DP1600		
		22	50/P	13	53B	A	-	J	G01C317		DP2000/2500		
		22	50/P	13	53B-1	-	-	-	G01J708		DP2000/2500 NAD, MJD, AUD, ASD, SAD, CND		
		30	50/P	13	53F	D	-	J	G01J708		DP2500 TWD		
		1	50/P	14	52								
		8	50/P	15	51								
		4	50/P	16	51								
		2	50/P	17	52								
		2	50/P	18	51								
		26	50/P	19	51								
		25	50/P	19	51-1	D	-	E	G01B281				
		2	50/P	22	102	A	-	J	G01C317		DP2000/2500		
4842040691	TZPAN3008MSZN3A	2	50/P	6	55								
4842040711	TPPAN3008MSZN3A	1	50/P	23	106	A	-	J	G01J733		DP1600S/2000S/2500S (NAD, MJD, AUD, ASD, SAD, TWD)		
4842040713	TPPAN3010MSZN3A	1	50/P	4	54								
4842040846	PTBR30*08MSZN3A	3	50/P	1	53								
		4	50/P	2	51								
		8	50/P	7	51								
		4	50/P	8	109B	A	-	J	G01C317		DP2000/2500		
		2	50/P	9	52						DP1600		
		2	50/P	10	101								
		6	50/P	11	107								
		3	50/P	12	52								
		1	50/P	13	54								
		2	50/P	14	53								
		4	50/P	15	52								
		2	50/P	18	54								
4842040854	TPPAN3005MSZN3A	8	50/P	4	51								
		8	50/P	4	51A	-	-	-	G01J708		DP1600/2000, DP2500(NAD, MJD, AUD, ASD, SAD, CND)		
		9	50/P	4	51A-1	D	-	J	G01I686		DP1600/2000, DP2500(NAD, MJD, AUD, ASD, SAD, CND)		
		12	50/P	4	51F	F	-	J	G01J708		DP2500 TWD		
		13	50/P	4	51F-1	D	-	J	G01I686		DP2500 TWD		
		13	50/P	5	51								
4842041344	ZPAN26X05MSZN3A	2	50/P	14	51								
4842041748	TZPAN-30*06S-3L	2	10/P	22	106	A	-	J	G01C317		DP2000/2500		
4842041799	SCREW-MR-M3-6	23	50/P	4	55								
4842042065	TBIDS3008MSCR1A	29	50/P	2	54								
		21	50/P	2	54-1	D	-	E	G01C393				
		22	50/P	2	54-2	D	-	J	G01F522				
		2	50/P	13	56								
4842042066	TBIDP3012MSZN3A	6	50/P	6	51								
4842042071	TBIDS3016MSZN3A	2	50/P	13	51								
4842042072	TBIDS3030MSZN3A	4	50/P	13	52								
4842042073	TZPAN-M3*08P-3A	4	50/P	18	59								
4842042074	TZPAN-M3*08S-3A	2	50/P	19	52								
4842042076	TBIDP3006MSZN3A	2	50/P	11	110	A	-	D	G01B270				
4842042077	TBIDP3008MSZN3A	3	50/P	1	52								
		1	50/P	2	53								
		1	50/P	6	52								
		8	50/P	7	51-1	C	B	D	G01K760				
		2	50/P	18	52								
		11	50/P	23	101	A	-	J	G01J733		DP1600S/2000S/2500S (NAD, MJD, AUD, ASD, SAD, TWD)		
		12	50/P	24	101	A	-	J	G01J733		DP1600S/2000S/2500S (NAD, MJD, AUD, ASD, SAD, TWD)		
4842042080	PTBR30*10MSCR3C	2	50/P	18	57								
4842042094	TBIDS4014MSZN3A	2	10/P	11	111B	A	-	J	G01C317		DP2000/2500		

PARTS NO.	PARTS NAME	Q'TY / PAGE	Q'TY / PACK	PAGE	ITEM NO.	P	I	R	BSI NO.	SERIAL NO.	REMARKS	LOCATION	C
4842042097	TBIDS2608MSZN3A	2	50/P	9	54						DP1600		
4842042105	TBIDB30*10ZMSZN	4	10/P	18	59-1	C	B	E	G01B284				
4842080090	TWAS030MSZN3A	2	50/P	18	58								
4842080106	WAS-3.5*7*0.5	1	5/P	24	103	A	-	J	G01J733		DP1600S/2000S/2500S		
											(NAD, MJD, AUD, ASD, SAD, TWD)		
4842080107	WAS-6*11.5*1.6	5	10/P	11	35								
		1	10/P	11	35-1	D	-	J	G01B232				
4842080163	ZPANS30*10ZN3A	2	10/P	22	104	A	-	J	G01C317		DP2000/2500		
4842080197	ZPAN30*06MSZN3A	5	50/P	9	53A						DP1600(120V)		
		6	50/P	9	53B						DP1600(220V)		
		1	50/P	11	105								
		8	50/P	22	103	A	-	J	G01C317		DP2000/2500		
		5	50/P	23	103	A	-	J	G01J733		DP1600S/2000S/2500S		
											(NAD, MJD, AUD, ASD, SAD, TWD)		
4842080198	ZPAN30*08MSZN3C	6	50/P	8	102								
		7	50/P	23	102	A	-	J	G01J733		DP1600S/2000S/2500S		
											(NAD, MJD, AUD, ASD, SAD, TWD)		
4842080212	ZPAN40*16MSZN3A	1	50/P	5	52								
4842080243	0SWAS030PBNI3E	2	10/P	22	50	A	-	J	G01C317		DP2000/2500		
4842080261	1HWAS030MSZN3A	1	50/P	10	103								
4842090308	ERR020SKZN3A	2	50/P	15	53								
		1	50/P	18	55								
4842090309	ERR025SKZN3A	1	50/P	11	101								
		1	50/P	14	54								
		1	50/P	24	105	A	-	J	G01J733		DP1600S/2000S/2500S		
											(NAD, MJD, AUD, ASD, SAD, TWD)		
4842090310	ERR030SKZN3A	4	50/P	8	106								
		1	50/P	11	104								
		2	50/P	23	105	A	-	J	G01J733		DP1600S/2000S/2500S		
											(NAD, MJD, AUD, ASD, SAD, TWD)		
		4	50/P	24	104	A	-	J	G01J733		DP1600S/2000S/2500S		
											(NAD, MJD, AUD, ASD, SAD, TWD)		
4842090311	ERR040SKZN3A	2	50/P	8	110B	A	-	J	G01C317		DP2000/2500		
		1	50/P	11	102								
4842090312	ERR050SKZN3A	6	50/P	8	107								
		3	50/P	17	53								
4842090313	ERR060SKZN3A	3	50/P	8	105								
		2	50/P	19	53								
4842090314	ERR070SKZN3A	2	50/P	18	56								
4842090315	ERR080SKZN3A	1	50/P	11	103								
4842413233	CLP-YMC-05-0	1	5/P	13	24								
		3	5/P	19	10								
4842904019	HPIN20/08SUSH7	1	50/P	8	45								
		4	50/P	17	9								
4842904021	HPIN20/14SUSH7	1	10/P	23	73	A	-	J	G01J733		DP1600S/2000S/2500S		
											(NAD, MJD, AUD, ASD, SAD, TWD)		
4842904035	HPIN20/10SUSH7	1	50/P	8	32								
		1	50/P	11	12								
		1	50/P	14	14								
4843073739	RTP-2J2B471JDT	1	10/P	53	288							R108	
4843074174	RTP-5B2E472JDT	1	10/P	53	206							R26	
		1	10/P	53	207							R27	
		1	10/P	53	257							R77	
4843074214	RTP-5B2E471JDT	1	10/P	53	195B	A	-	J	G01C317		DP2000/2500	R15	
4843075357	RZ-RXE017	1	1/P	53	331B	A	-	J	G01C317		DP2000/2500	F1	
4843075359	RZ-RXE025	1	1/P	53	331							F1	
		1	1/P	53	331A	-	-	-	G01C317		DP1600	F1	
4843076312	RTP-3B2B103JD	1	10/P	53	292							R112	
4843076858	RTP-4N1JR50JDT	1	10/P	52	81							R71	
		1	10/P	52	93							R83	
		1	10/P	52	149							R139	
		1	10/P	52	182							R172	
		1	10/P	52	319B	A	-	J	G01C317		DP2000/2500	R309	
		1	10/P	52	320B	A	-	J	G01C317		DP2000/2500	R310	
		1	10/P	52	339							R329	
		1	10/P	52	340							R330	
		1	10/P	52	341							R331	
		1	10/P	52	449							R439	
		1	10/P	52	460							R450	
		1	10/P	52	497							R487	
		1	10/P	52	499							R489	

PARTS NO.	PARTS NAME	Q'TY / PAGE	Q'TY / PACK	PAGE	ITEM NO.	P	I	R	BSI NO.	SERIAL NO.	REMARKS	LOCATION	C
		1	10/P	52	507							R497	
4843076858	RTP-4N1JR50JDT	1	10/P	52	525							R515	
		1	10/P	52	558							R548	
		1	10/P	52	559							R550	
		1	10/P	53	255							R75	
		1	10/P	53	286							R106	
		1	10/P	53	290							R110	
		1	10/P	54	91							R11	
		1	10/P	54	92							R12	
		1	10/P	54	119							R39	
4843076860	RTP-4J2A152JDT	1	10/P	52	498							R488	
4843076861	RTP-4J2A332JDT	1	10/P	52	391							R381	
		1	10/P	52	392							R382	
		1	10/P	52	526							R516	
4843076863	RTP-4J2A123JDT	1	10/P	52	125							R115	
4843076866	RTP-4J1J391JDT	1	10/P	54	81							R1	
		1	10/P	54	82							R2	
		1	10/P	54	83							R3	
		1	10/P	54	84							R4	
		1	10/P	54	85							R5	
4843077282	RTP-4J2A103JDT	1	10/P	52	11							R1	
		1	10/P	52	12							R2	
		1	10/P	52	13							R3	
		1	10/P	52	14							R4	
		1	10/P	52	15							R5	
		1	10/P	52	16							R6	
		1	10/P	52	17							R7	
		1	10/P	52	18							R8	
		1	10/P	52	19							R9	
		1	10/P	52	20							R10	
		1	10/P	52	21							R11	
		1	10/P	52	22							R12	
		1	10/P	52	23							R13	
		1	10/P	52	24							R14	
		1	10/P	52	25							R15	
		1	10/P	52	27							R17	
		1	10/P	52	29							R19	
		1	10/P	52	30							R20	
		1	10/P	52	31							R21	
		1	10/P	52	32							R22	
		1	10/P	52	33							R23	
		1	10/P	52	34							R24	
		1	10/P	52	35							R25	
		1	10/P	52	36							R26	
		1	10/P	52	38							R28	
		1	10/P	52	45							R35	
		1	10/P	52	47	F		J	G01B232			R37	
		1	10/P	52	47A				G01C317		DP1600	R37	
		1	10/P	52	48							R38	
		1	10/P	52	60							R50	
		1	10/P	52	61							R51	
		1	10/P	52	62							R52	
		1	10/P	52	63							R53	
		1	10/P	52	64							R54	
		1	10/P	52	65							R55	
		1	10/P	52	66							R56	
		1	10/P	52	67							R57	
		1	10/P	52	68							R58	
		1	10/P	52	83							R73	
		1	10/P	52	90							R80	
		1	10/P	52	91							R81	
		1	10/P	52	103							R93	
		1	10/P	52	105							R95	
		1	10/P	52	109							R99	
		1	10/P	52	110							R100	
		1	10/P	52	111							R101	
		1	10/P	52	112							R102	
		1	10/P	52	122							R112	
		1	10/P	52	124							R114	
		1	10/P	52	126							R116	

PARTS NO.	PARTS NAME	Q'TY / PAGE	Q'TY / PACK	PAGE	ITEM NO.	P	I	R	BSI NO.	SERIAL NO.	REMARKS	LOCATION	C
		1	10/P	52	129							R119	
4843077282	RTP-4J2A103JDT	1	10/P	52	150							R140	
		1	10/P	52	168							R158	
		1	10/P	52	185							R175	
		1	10/P	52	215							R205	
		1	10/P	52	216							R206	
		1	10/P	52	221							R211	
		1	10/P	52	226							R216	
		1	10/P	52	249							R239	
		1	10/P	52	273							R263	
		1	10/P	52	278							R268	
		1	10/P	52	279							R269	
		1	10/P	52	280							R270	
		1	10/P	52	286							R276	
		1	10/P	52	288							R278	
		1	10/P	52	293							R283	
		1	10/P	52	295							R285	
		1	10/P	52	297							R287	
		1	10/P	52	321							R311	
		1	10/P	52	323							R313	
		1	10/P	52	325							R315	
		1	10/P	52	327							R317	
		1	10/P	52	329							R319	
		1	10/P	52	330							R320	
		1	10/P	52	332							R322	
		1	10/P	52	334							R324	
		1	10/P	52	336							R326	
		1	10/P	52	337							R327	
		1	10/P	52	338							R328	
		1	10/P	52	343							R333	
		1	10/P	52	344							R334	
		1	10/P	52	348	F	-	J	G01B232			R338	
		1	10/P	52	348A	-	-	-	G01C317		DP1600	R338	
		1	10/P	52	348C	A	-	J	G01C317		DP2500	R338	
		1	10/P	52	389							R379	
		1	10/P	52	390							R380	
		1	10/P	52	454							R444	
		1	10/P	52	455							R445	
		1	10/P	52	456							R446	
		1	10/P	52	457							R447	
		1	10/P	52	458							R448	
		1	10/P	52	463							R453	
		1	10/P	52	464							R454	
		1	10/P	52	466							R456	
		1	10/P	52	467							R457	
		1	10/P	52	468							R458	
		1	10/P	52	470							R460	
		1	10/P	52	494							R484	
		1	10/P	52	495							R485	
		1	10/P	52	496							R486	
		1	10/P	52	506							R496	
		1	10/P	52	521							R511	
		1	10/P	52	522							R512	
		1	10/P	52	523	F	-	J	G01B232			R513	
		1	10/P	52	523A	-	-	-	G01C317		DP1600	R513	
		1	10/P	52	523C	A	-	J	G01C317		DP2500	R513	
		1	10/P	52	524							R514	
		1	10/P	52	527							R517	
		1	10/P	52	528							R518	
		1	10/P	52	529							R519	
		1	10/P	52	530							R520	
		1	10/P	52	531							R521	
		1	10/P	52	552							R542	
		1	10/P	52	553							R543	
		1	10/P	52	554							R544	
		1	10/P	52	555							R545	
		1	10/P	52	556							R546	
		1	10/P	53	181							R1	
		1	10/P	53	182							R2	
		1	10/P	53	183							R3	

PARTS NO.	PARTS NAME	Q'TY / PAGE	Q'TY / PACK	PAGE	ITEM NO.	P	I	R	BSI NO.	SERIAL NO.	REMARKS	LOCATION	C
		1	10/P	53	184							R4	
4843077282	RTP-4J2A103JDT	1	10/P	53	186							R6	
		1	10/P	53	188							R8	
		1	10/P	53	190							R10	
		1	10/P	53	191							R11	
		1	10/P	53	192B	A	-	J	G01C317		DP2000/2500	R12	
		1	10/P	53	193B-1	C	B	B	G01J717		DP2000/2500	R13	
		1	10/P	53	196B	A	-	J	G01C317		DP2000/2500	R16	
		1	10/P	53	197							R17	
		1	10/P	53	200							R20	
		1	10/P	53	202							R22	
		1	10/P	53	204							R24	
		1	10/P	53	205							R25	
		1	10/P	53	208							R28	
		1	10/P	53	217							R37	
		1	10/P	53	220							R40	
		1	10/P	53	221							R41	
		1	10/P	53	222							R42	
		1	10/P	53	223							R43	
		1	10/P	53	224							R44	
		1	10/P	53	227							R47	
		1	10/P	53	228							R48	
		1	10/P	53	229							R49	
		1	10/P	53	230							R50	
		1	10/P	53	232							R52	
		1	10/P	53	236							R56	
		1	10/P	53	240							R60	
		1	10/P	53	241							R61	
		1	10/P	53	242							R62	
		1	10/P	53	251							R71	
		1	10/P	53	256							R76	
		1	10/P	53	260							R80	
		1	10/P	53	277							R97	
		1	10/P	53	282							R102	
		1	10/P	53	283							R103	
		1	10/P	53	284							R104	
		1	10/P	53	289							R109	
		1	10/P	53	294							R114	
		1	10/P	53	295							R115	
		1	10/P	53	296							R116	
		1	10/P	53	297							R117	
		1	10/P	53	298							R118	
		1	10/P	53	299							R119	
		1	10/P	54	111							R31	
		1	10/P	54	112							R32	
		1	10/P	54	113							R33	
		1	10/P	54	114							R34	
		1	10/P	54	115							R35	
		1	10/P	54	116							R36	
		1	10/P	54	117							R37	
		1	10/P	54	118							R38	
4843077322	RTP-4J2A102JDT	1	10/P	52	82							R72	
		1	10/P	52	107							R97	
		1	10/P	52	132							R122	
		1	10/P	52	225							R215	
		1	10/P	53	192B-1	C	B	B	G01J717		DP2000/2500	R12	
		1	10/P	53	291							R111	
		1	10/P	54	87							R7	
		1	10/P	54	88							R8	
		1	10/P	54	89							R9	
		1	10/P	54	90							R10	
		1	10/P	54	95							R15	
4843077324	RTP-4J2A224JDT	1	10/P	52	503							R493	
4843077342	RTP-4J2A101JDT	1	10/P	52	40							R30	
		1	10/P	52	104							R94	
		1	10/P	52	134							R124	
		1	10/P	52	143							R133	
		1	10/P	52	144							R134	
		1	10/P	52	145							R135	
		1	10/P	52	151							R141	

PARTS NO.	PARTS NAME	Q'TY / PAGE	Q'TY / PACK	PAGE	ITEM NO.	P	I	R	BSI NO.	SERIAL NO.	REMARKS	LOCATION	C
		1	10/P	52	158							R148	
4843077342	RTP-4J2A101JDT	1	10/P	52	159							R149	
		1	10/P	52	160							R150	
		1	10/P	52	161							R151	
		1	10/P	52	162							R152	
		1	10/P	52	165							R155	
		1	10/P	52	178							R168	
		1	10/P	52	194							R184	
		1	10/P	52	195							R185	
		1	10/P	52	196							R186	
		1	10/P	52	197							R187	
		1	10/P	52	198							R188	
		1	10/P	52	199							R189	
		1	10/P	52	200							R190	
		1	10/P	52	201							R191	
		1	10/P	52	212							R202	
		1	10/P	52	213							R203	
		1	10/P	52	214							R204	
		1	10/P	52	248							R238	
		1	10/P	52	251							R241	
		1	10/P	52	274							R264	
		1	10/P	52	275							R265	
		1	10/P	52	276							R266	
		1	10/P	52	292							R282	
		1	10/P	52	298							R288	
		1	10/P	52	299							R289	
		1	10/P	52	393							R383	
		1	10/P	52	394							R384	
		1	10/P	52	395							R385	
		1	10/P	52	396							R386	
		1	10/P	52	397							R387	
		1	10/P	52	398							R388	
		1	10/P	52	400							R390	
		1	10/P	52	453							R443	
		1	10/P	52	550							R540	
		1	10/P	52	560							R551	
		1	10/P	52	561							R552	
		1	10/P	53	185							R5	
		1	10/P	53	187							R7	
		1	10/P	53	189							R9	
		1	10/P	53	198							R18	
		1	10/P	53	211							R31	
		1	10/P	53	212							R32	
		1	10/P	53	219							R39	
		1	10/P	53	225							R45	
		1	10/P	53	226							R46	
		1	10/P	53	250							R70	
		1	10/P	53	261							R81	
		1	10/P	53	264							R84	
		1	10/P	53	266							R86	
		1	10/P	53	268							R88	
		1	10/P	53	271							R91	
		1	10/P	53	273							R93	
		1	10/P	53	274							R94	
		1	10/P	53	275							R95	
		1	10/P	53	276							R96	
		1	10/P	53	278							R98	
		1	10/P	53	279							R99	
		1	10/P	53	280							R100	
		1	10/P	53	285							R105	
		1	10/P	54	86							R6	
		1	10/P	54	98							R18	
		1	10/P	54	99							R19	
		1	10/P	54	100							R20	
		1	10/P	54	101							R21	
		1	10/P	54	102							R22	
		1	10/P	54	103							R23	
		1	10/P	54	104							R24	
		1	10/P	54	105							R25	
4843077347	RTP-4J2A222JDT	1	10/P	52	346							R336	

PARTS NO.	PARTS NAME	Q'TY / PAGE	Q'TY / PACK	PAGE	ITEM NO.	P	I	R	BSI NO.	SERIAL NO.	REMARKS	LOCATION	C
4843077348	RTP-4J2A472JDT	1	10/P	52	133							R123	
		1	10/P	52	152							R142	
		1	10/P	52	179							R169	
		1	10/P	52	180							R170	
		1	10/P	52	183							R173	
		1	10/P	52	184							R174	
		1	10/P	52	254							R244	
		1	10/P	52	469							R459	
		1	10/P	52	471							R461	
		1	10/P	52	500							R490	
		1	10/P	53	193B	A	-	J	G01C317		DP2000/2500	R13	
		1	10/P	53	203							R23	
		1	10/P	53	254							R74	
4843077350	RTP-4J2A105JDT	1	10/P	52	480							R470	
		1	10/P	53	215							R35	
		1	10/P	53	216							R36	
		1	10/P	53	270							R90	
4843077408	RTP-4J2A473JDT	1	10/P	52	42							R32	
		1	10/P	52	130							R120	
		1	10/P	52	155							R145	
		1	10/P	52	157							R147	
		1	10/P	52	163							R153	
		1	10/P	52	164							R154	
		1	10/P	52	166							R156	
		1	10/P	52	167							R157	
		1	10/P	52	190							R180	
		1	10/P	52	191							R181	
		1	10/P	52	222							R212	
		1	10/P	52	223							R213	
		1	10/P	52	224							R214	
		1	10/P	52	227							R217	
		1	10/P	52	256							R246	
		1	10/P	52	285							R275	
		1	10/P	52	290							R280	
		1	10/P	52	291							R281	
		1	10/P	52	294							R284	
		1	10/P	52	300							R290	
		1	10/P	52	381							R371	
		1	10/P	52	382							R372	
		1	10/P	52	383							R373	
		1	10/P	52	384							R374	
		1	10/P	52	385							R375	
		1	10/P	52	386							R376	
		1	10/P	52	387							R377	
		1	10/P	52	388							R378	
		1	10/P	52	459							R449	
		1	10/P	52	462							R452	
		1	10/P	53	194							R14	
		1	10/P	53	253							R73	
		1	10/P	53	281							R101	
		1	10/P	54	94							R14	
		1	10/P	54	107							R27	
		1	10/P	54	108							R28	
		1	10/P	54	109							R29	
		1	10/P	54	110							R30	
4843077416	RTP-4J2A183JDT	1	10/P	52	501							R491	
4843077475	RTP-4H1J2200FDT	1	10/P	52	193							R183	
		1	10/P	52	342							R332	
		1	10/P	52	485							R475	
4843077481	RTP-4H1J1003FDT	1	10/P	52	481							R471	
		1	10/P	52	483							R473	
4843077483	RTP-4J2A470JDT	1	10/P	52	44							R34	
		1	10/P	52	85							R75	
		1	10/P	52	86							R76	
		1	10/P	52	87							R77	
		1	10/P	52	88							R78	
		1	10/P	52	94							R84	
		1	10/P	52	95							R85	
		1	10/P	52	96							R86	
		1	10/P	52	97							R87	

PARTS NO.	PARTS NAME	Q'TY / PAGE	Q'TY / PACK	PAGE	ITEM NO.	P	I	R	BSI NO.	SERIAL NO.	REMARKS	LOCATION	C
		1	10/P	52	98							R88	
4843077483	RTP-4J2A470JDT	1	10/P	52	99							R89	
		1	10/P	52	100							R90	
		1	10/P	52	101							R91	
		1	10/P	52	113							R103	
		1	10/P	52	114							R104	
		1	10/P	52	115							R105	
		1	10/P	52	116							R106	
		1	10/P	52	117							R107	
		1	10/P	52	118							R108	
		1	10/P	52	119							R109	
		1	10/P	52	120							R110	
		1	10/P	52	219							R209	
		1	10/P	52	228							R218	
		1	10/P	52	229							R219	
		1	10/P	52	230							R220	
		1	10/P	52	231							R221	
		1	10/P	52	232							R222	
		1	10/P	52	233							R223	
		1	10/P	52	234							R224	
		1	10/P	52	235							R225	
		1	10/P	52	557							R547	
4843077485	RTP-4J2A104JDT	1	10/P	52	156							R146	
		1	10/P	52	188							R178	
		1	10/P	52	189							R179	
4843077488	RTP-7M3A100JDT	1	10/P	53	262							R82	
		1	10/P	53	263							R83	
4843077490	RTP-4H1J1001FDT	1	10/P	52	482							R472	
4843077817	RTP-4J2A512JDT	1	10/P	52	345							R335	
		1	10/P	52	347							R337	
4843077840	RTP-4J2A100JDT	1	10/P	52	169							R159	
		1	10/P	52	170							R160	
		1	10/P	52	171							R161	
		1	10/P	52	173							R163	
		1	10/P	52	174							R164	
		1	10/P	52	242							R232	
		1	10/P	52	243							R233	
		1	10/P	52	244							R234	
		1	10/P	52	245							R235	
		1	10/P	52	246							R236	
		1	10/P	52	247							R237	
		1	10/P	52	277							R267	
		1	10/P	52	536							R526	
		1	10/P	52	537							R527	
		1	10/P	52	538							R528	
		1	10/P	52	539							R529	
		1	10/P	52	540							R530	
		1	10/P	52	541							R531	
		1	10/P	52	542							R532	
		1	10/P	52	543							R533	
		1	10/P	52	544							R534	
		1	10/P	52	545							R535	
		1	10/P	52	546							R536	
		1	10/P	52	547							R537	
		1	10/P	52	548							R538	
		1	10/P	52	549							R539	
		1	10/P	54	93							R13	
		1	10/P	54	96							R16	
		1	10/P	54	97							R17	
		1	10/P	54	106							R26	
4843077844	RTP-4J2A220JDT	1	10/P	52	146							R136	
		1	10/P	52	147							R137	
		1	10/P	52	154							R144	
		1	10/P	52	217							R207	
		1	10/P	52	218							R208	
		1	10/P	52	220							R210	
		1	10/P	52	512							R502	
		1	10/P	52	513							R503	
		1	10/P	52	514							R504	
		1	10/P	52	515							R505	

PARTS NO.	PARTS NAME	Q'TY / PAGE	Q'TY / PACK	PAGE	ITEM NO.	P	I	R	BSI NO.	SERIAL NO.	REMARKS	LOCATION	C
		1	10/P	52	516							R506	
4843077844	RTP-4J2A220JDT	1	10/P	52	517							R507	
		1	10/P	52	518							R508	
		1	10/P	52	532							R522	
		1	10/P	52	533							R523	
		1	10/P	52	534							R524	
		1	10/P	52	535							R525	
4843077846	RTP-4J2A330JDT	1	10/P	52	28							R18	
		1	10/P	52	37							R27	
		1	10/P	52	39							R29	
		1	10/P	52	41							R31	
		1	10/P	52	46							R36	
		1	10/P	52	51							R41	
		1	10/P	52	52							R42	
		1	10/P	52	53							R43	
		1	10/P	52	54							R44	
		1	10/P	52	55							R45	
		1	10/P	52	56							R46	
		1	10/P	52	57							R47	
		1	10/P	52	58							R48	
		1	10/P	52	59							R49	
		1	10/P	52	69							R59	
		1	10/P	52	70							R60	
		1	10/P	52	71							R61	
		1	10/P	52	72							R62	
		1	10/P	52	73							R63	
		1	10/P	52	74							R64	
		1	10/P	52	75							R65	
		1	10/P	52	76							R66	
		1	10/P	52	77							R67	
		1	10/P	52	84							R74	
		1	10/P	52	89							R79	
		1	10/P	52	102							R92	
		1	10/P	52	121							R111	
		1	10/P	52	123							R113	
		1	10/P	52	127							R117	
		1	10/P	52	128							R118	
		1	10/P	52	131							R121	
		1	10/P	52	136							R126	
		1	10/P	52	137							R127	
		1	10/P	52	138							R128	
		1	10/P	52	139							R129	
		1	10/P	52	140							R130	
		1	10/P	52	141							R131	
		1	10/P	52	142							R132	
		1	10/P	52	153							R143	
		1	10/P	52	175							R165	
		1	10/P	52	176							R166	
		1	10/P	52	177							R167	
		1	10/P	52	202							R192	
		1	10/P	52	203							R193	
		1	10/P	52	204							R194	
		1	10/P	52	205							R195	
		1	10/P	52	206							R196	
		1	10/P	52	207							R197	
		1	10/P	52	208							R198	
		1	10/P	52	209							R199	
		1	10/P	52	210							R200	
		1	10/P	52	211							R201	
		1	10/P	52	236							R226	
		1	10/P	52	237							R227	
		1	10/P	52	238							R228	
		1	10/P	52	239							R229	
		1	10/P	52	240							R230	
		1	10/P	52	241							R231	
		1	10/P	52	252							R242	
		1	10/P	52	253							R243	
		1	10/P	52	257							R247	
		1	10/P	52	258							R248	
		1	10/P	52	259							R249	

PARTS NO.	PARTS NAME	Q'TY / PAGE	Q'TY / PACK	PAGE	ITEM NO.	P	I	R	BSI NO.	SERIAL NO.	REMARKS	LOCATION	C
		1	10/P	52	260							R250	
4843077846	RTP-4J2A330JDT	1	10/P	52	261							R251	
		1	10/P	52	262							R252	
		1	10/P	52	263							R253	
		1	10/P	52	264							R254	
		1	10/P	52	265							R255	
		1	10/P	52	266							R256	
		1	10/P	52	267							R257	
		1	10/P	52	268							R258	
		1	10/P	52	269							R259	
		1	10/P	52	270							R260	
		1	10/P	52	271							R261	
		1	10/P	52	272							R262	
		1	10/P	52	281							R271	
		1	10/P	52	282							R272	
		1	10/P	52	283							R273	
		1	10/P	52	284							R274	
		1	10/P	52	287							R277	
		1	10/P	52	289							R279	
		1	10/P	52	296							R286	
		1	10/P	52	303							R293	
		1	10/P	52	304							R294	
		1	10/P	52	305							R295	
		1	10/P	52	306							R296	
		1	10/P	52	307							R297	
		1	10/P	52	308							R298	
		1	10/P	52	309							R299	
		1	10/P	52	310							R300	
		1	10/P	52	311							R301	
		1	10/P	52	312							R302	
		1	10/P	52	313							R303	
		1	10/P	52	314							R304	
		1	10/P	52	315							R305	
		1	10/P	52	316							R306	
		1	10/P	52	317							R307	
		1	10/P	52	318							R308	
		1	10/P	52	322							R312	
		1	10/P	52	324							R314	
		1	10/P	52	326							R316	
		1	10/P	52	328							R318	
		1	10/P	52	331							R321	
		1	10/P	52	333							R323	
		1	10/P	52	335							R325	
		1	10/P	52	353							R343	
		1	10/P	52	354							R344	
		1	10/P	52	355							R345	
		1	10/P	52	356							R346	
		1	10/P	52	357							R347	
		1	10/P	52	358							R348	
		1	10/P	52	359							R349	
		1	10/P	52	360							R350	
		1	10/P	52	361							R351	
		1	10/P	52	362							R352	
		1	10/P	52	363							R353	
		1	10/P	52	364							R354	
		1	10/P	52	365							R355	
		1	10/P	52	366							R356	
		1	10/P	52	367							R357	
		1	10/P	52	368							R358	
		1	10/P	52	369							R359	
		1	10/P	52	370							R360	
		1	10/P	52	371							R361	
		1	10/P	52	372							R362	
		1	10/P	52	373							R363	
		1	10/P	52	374							R364	
		1	10/P	52	375							R365	
		1	10/P	52	376							R366	
		1	10/P	52	377							R367	
		1	10/P	52	378							R368	
		1	10/P	52	379							R369	

PARTS NO.	PARTS NAME	Q'TY / PAGE	Q'TY / PACK	PAGE	ITEM NO.	P	I	R	BSI NO.	SERIAL NO.	REMARKS	LOCATION	C
		1	10/P	52	380							R370	
4843077846	RTP-4J2A330JDT	1	10/P	52	399							R389	
		1	10/P	52	401							R391	
		1	10/P	52	402							R392	
		1	10/P	52	403							R393	
		1	10/P	52	404							R394	
		1	10/P	52	405							R395	
		1	10/P	52	406							R396	
		1	10/P	52	407							R397	
		1	10/P	52	408							R398	
		1	10/P	52	409							R399	
		1	10/P	52	410							R400	
		1	10/P	52	411							R401	
		1	10/P	52	412							R402	
		1	10/P	52	413							R403	
		1	10/P	52	414							R404	
		1	10/P	52	415							R405	
		1	10/P	52	416							R406	
		1	10/P	52	417							R407	
		1	10/P	52	418							R408	
		1	10/P	52	419							R409	
		1	10/P	52	420							R410	
		1	10/P	52	421							R411	
		1	10/P	52	422							R412	
		1	10/P	52	423							R413	
		1	10/P	52	424							R414	
		1	10/P	52	425							R415	
		1	10/P	52	426							R416	
		1	10/P	52	427							R417	
		1	10/P	52	428							R418	
		1	10/P	52	429							R419	
		1	10/P	52	430							R420	
		1	10/P	52	431							R421	
		1	10/P	52	432							R422	
		1	10/P	52	433							R423	
		1	10/P	52	434							R424	
		1	10/P	52	435							R425	
		1	10/P	52	436							R426	
		1	10/P	52	438							R428	
		1	10/P	52	439							R429	
		1	10/P	52	440							R430	
		1	10/P	52	441							R431	
		1	10/P	52	442							R432	
		1	10/P	52	443							R433	
		1	10/P	52	444							R434	
		1	10/P	52	445							R435	
		1	10/P	52	446							R436	
		1	10/P	52	447							R437	
		1	10/P	52	452							R442	
		1	10/P	52	461							R451	
		1	10/P	52	465							R455	
		1	10/P	52	472							R462	
		1	10/P	52	473							R463	
		1	10/P	52	474							R464	
		1	10/P	52	475							R465	
		1	10/P	52	476							R466	
		1	10/P	52	477							R467	
		1	10/P	52	490							R480	
		1	10/P	52	491							R481	
		1	10/P	52	492							R482	
		1	10/P	52	493							R483	
		1	10/P	52	505							R495	
		1	10/P	52	509							R499	
		1	10/P	52	551							R541	
		1	10/P	53	233							R53	
		1	10/P	53	234							R54	
		1	10/P	53	235							R55	
		1	10/P	53	237							R57	
		1	10/P	53	238							R58	
		1	10/P	53	239							R59	

PARTS NO.	PARTS NAME	Q'TY / PAGE	Q'TY / PACK	PAGE	ITEM NO.	P	I	R	BSI NO.	SERIAL NO.	REMARKS	LOCATION	C
		1	10/P	53	243							R63	
4843077846	RTP-4J2A330JDT	1	10/P	53	244							R64	
		1	10/P	53	245							R65	
		1	10/P	53	246							R66	
		1	10/P	53	247							R67	
		1	10/P	53	248							R68	
		1	10/P	53	249							R69	
4843077871	RTP-4J2A1002FDT	1	10/P	52	510							R500	
4843077873	RTP-4J2A1302FDT	1	10/P	52	511							R501	
4843077887	RTP-4J2A151JDF	1	10/P	52	106							R96	
		1	10/P	52	108							R98	
		1	10/P	52	135							R125	
4843077893	RTP-4J2A564JDT	1	10/P	52	350							R340	
		1	10/P	52	351							R341	
		1	10/P	52	352							R342	
4843077895	RTP-4H1J6201FDT	1	10/P	52	486							R476	
4843077896	RTP-4H1J9101FDT	1	10/P	52	451							R441	
4843077913	RTP-2H2B1202FDT	1	10/P	53	287							R107	
4843077927	RTP-7J3A470JDT	1	10/P	53	201							R21	
4843077929	RTP-4J2A10R0FDT	1	10/P	53	199							R19	
4843077933	RTP-4J2A912JDT	1	10/P	53	231							R51	
4843077938	RTP-6Z2H000JDT	1	10/P	53	218							R38	
4843077939	RTP-6Z2H1R0JDT	1	10/P	53	265							R85	
4843077940	RTP-6J2H220JDT	1	10/P	53	213							R33	
		1	10/P	53	214							R34	
		1	10/P	53	269							R89	
4843077941	RTP-6J2H620JDT	1	10/P	53	267							R87	
4843077944	RTP-6J2H181JDT	1	10/P	53	293							R113	
4843077951	RTP-4H1J4703FDT	1	10/P	52	479							R469	
4843077981	RTP-4H1J2701FDT	1	10/P	52	450							R440	
4843077982	RTP-4H1J3301FDT	1	10/P	52	26							R16	
4843077989	RTP-5Z2E000JDT	1	10/P	52	50							R40	
		1	10/P	52	80							R70	
4843077990	RTP-4H1J2000FDT	1	10/P	52	484							R474	
4843077991	RTP-4H1J5600FDT	1	10/P	52	448							R438	
4843077992	RTP-4H1J1201FDT	1	10/P	52	487							R477	
4843077993	RTP-4H1J5603FDT	1	10/P	52	478							R468	
4843077996	RTP-4J2A680JDT	1	10/P	52	437							R427	
		1	10/P	52	504							R494	
4843078009	RF-Z2EP75R0G	1	5/P	23	62	A	-	J	G01J733		DP1600S/2000S/2500S (NAD, MJD, AUD, ASD, SAD, TWD)		
4843101717	Q-DTC114EKAT146	1	1/P	51	133							Q3	
		1	1/P	51	134							Q4	
		1	1/P	53	33B	A	-	J	G01C317		DP2000/2500	Q3	
		1	1/P	53	34							Q4	
		1	1/P	53	35							Q5	
		1	1/P	53	43							Q13	
		1	1/P	53	47							Q17	
		1	1/P	53	48							Q18	
4843101720	Q-DTA114EKAT146	1	1/P	53	40							Q10	
4843101727	Q-DTA114GKAT146	1	1/P	51	131							Q1	
4843101729	Q-2SC4485T-AN	1	1/P	53	31							Q1	
4843101735	D-RD4.7FB1-T7	1	1/P	53	322							ZD2	
4843112690	IC-M51957BFP	1	5/S	51	90							IC80	
4843114470	IC-M62352GP	1	5/S	51	27							IC17	
4843116409	IC-SN74LS06NSE2	1	5/S	51	20							IC10	
		1	5/S	51	21							IC11	
		1	5/S	51	39B	A	-	J	G01C317		DP2000/2500	IC29	
		1	5/S	53	13							IC3	
4843117457	IC-MC68SEC00016	1	1/S	51	76							IC66	
4843117458	IC-MBM29LV16B90	1	1/S	51	61							IC51	
		1	1/S	51	63							IC53	
4843117459	IC-UPC393G2-T1	1	5/S	51	22							IC12	
4843117465	IC-IS61LV25612J	1	5/S	51	86							IC76	
		1	5/S	51	87							IC77	
4843117467	IC-PST593CMT	1	5/S	51	52							IC42	
		1	5/S	51	71							IC61	
4843117476	IC-HM5264805FA6	1	1/S	51	23							IC13	
		1	1/S	51	29							IC19	
4843117499	IC-PM-22	1	1/S	51	77							IC67	

PARTS NO.	PARTS NAME	Q'TY / PAGE	Q'TY / PACK	PAGE	ITEM NO.	P	I	R	BSI NO.	SERIAL NO.	REMARKS	LOCATION	C
4843117500	IC-TW6407-T1	1	1/S	51	13							IC3	
4843117509	IC-HM5264165FA6	1	1/S	51	42							IC32	
4843117547	IC-MBM29LV4BC-9	1	1/S	51	60							IC50	
4843117571	IC-W24258S-70LE	1	1/S	51	68							IC58	
		1	1/S	51	84							IC74	
4843117582	IC-M27C4001-10F	1	1/S	20	10								
4843117732	IC-MSM27C1602CZ	2	1/S	20	9								
4843232255	SP-CS1A-B2CA	1	1/D	13	20								
		1	1/D	14	7								
		2	1/D	19	15								
4843232258	SW-AJ8W200WW	1	1/D	13	19								
		1	1/D	13	19A	-	-	-	G011704		NAD, MJD, AUD, ASD, SAD, TWD		
4843250821	X-CSA4.00MGTF01	1	5/S	52	622							X2	
4843250906	XO-VX-3H33.0000	1	5/S	52	621							X1	
4843250907	XO-VX-3H39.9278	1	5/S	52	623							X3	
		1	5/S	52	623A	-	-	-	G01C317		DP1600	X3	
4843250908	XO-VX-3H54.2174	1	1/C	52	623B	A	-	J	G01C317		DP2000/2500	X3	
4843304368	J-173979-03	1	5/P	53	375							CN45	
4843304370	J-173979-05	1	5/P	53	356							CN26	
4843304836	J-53014-0210	1	5/P	53	364							CN34	
4843304917	J-173981-2	1	5/P	53	362							CN32	
4843304918	J-173981-3	1	5/P	53	368							CN38	
4843304919	J-173981-4	1	5/P	53	363							CN33	
4843304921	J-173981-6	1	5/P	53	359							CN29	
		1	5/P	53	359A	-	-	-	G01C317		DP1600	CN29	
4843304923	J-173981-8	1	5/P	53	36							Q6	
		1	5/P	53	37							Q7	
		1	5/P	53	42							Q12	
		1	5/P	53	49							Q19	
		1	5/P	53	360B	A	-	J	G01C317		DP2000/2500	CN30	
4843304942	J-53052-0610	1	5/P	53	365							CN35	
4843304943	J-53052-0510	1	5/P	53	358							CN28	
4843304945	J-53052-0310	1	5/P	53	372B	A	-	J	G01C317		DP2000/2500	CN42	
4843305047	J-53015-0410	1	5/P	53	380							CN50	
4843306175	J-S2B-PH-K-S	1	5/P	53	377							CN47	
4843306504	J-53253-1010	1	10/P	51	677							CN17	
4843306510	J-53254-0210	1	5/P	53	383							CN53	
4843306518	J-53254-1010	1	5/P	53	354							CN24	
4843307778	J-53313-1215	1	5/P	51	676B	A	-	J	G01C317		DP2000/2500	CN16	
		1	5/P	53	367							CN37	
4843307785	J-53313-2615	1	5/P	51	669							CN9	
4843307788	J-53313-3415	1	5/P	51	668							CN8	
4843307793	J-174215-1	1	1/P	51	671B	A	-	J	G01C317		DP2000/2500	CN11	
4843307992	J-53324-0310	1	5/P	53	369							CN39	
4843308001	J-53324-1210	1	5/P	53	361							CN31	
4843308003	J-53324-1410	1	5/P	53	366							CN36	
4843308009	J-53325-0610	1	10/P	53	374							CN44	
4843308501	J-DHBPB050S131N	1	1/P	51	672							CN12	
		1	1/P	51	673							CN13	
4843309862	J-54702-1211	1	5/P	17	11								
4843309863	J-55533-1211	1	5/P	19	12								
4843309864	J-VLP-03V	1	5/P	9	27						DP1600		
		1	5/P	22	27	A	-	J	G01C317		DP2000/2500		
4843309865	JP-NC-179-F6.35	1	5/P	13	9								
4843309882	J-DHBRD30-S13N4	1	1/P	51	663							CN3	
4843309883	J-DHBRD50-S13N4	1	1/P	51	670							CN10	
4843309884	J-DHBRD100S13N4	1	1/P	53	351							CN21	
4843309885	J-DHBRK100S13NN	1	1/P	51	665							CN5	
4843309889	J-53426-0410	1	1/P	53	378B	A	-	J	G01C317		DP2000/2500	CN48	
4843309890	J-53259-0410	1	1/P	53	379							CN49	
4843309891	J-52368-1001	1	1/P	51	666							CN6	
4843309892	J-53254-0310	1	1/P	53	384							CN54	
4843309893	J-53254-0410	1	1/P	53	357							CN27	
4843309899	J-5569-18A1	1	1/P	53	352							CN22	
		1	1/P	53	352A	-	-	-	G01C317		DP1600	CN22	
4843309900	J-5569-20A1	1	1/P	53	353							CN23	
		0	1/P	53	353-1	B	-	J	G01B232			CN23	
		1	1/P	53	353B	A	-	J	G01C317		DP2000/2500	CN23	
4843309903	J-DHBPB100S13NN	1	1/P	51	675							CN15	
4843309905	J-B26B-PHDSS	1	1/P	51	664							CN4	

PARTS NO.	PARTS NAME	Q'TY / PAGE	Q'TY / PACK	PAGE	ITEM NO.	P	I	R	BSI NO.	SERIAL NO.	REMARKS	LOCATION	C
4843309906	J-B8B-PH-K-S	1	1/P	51	678							CN18	
4843309932	J-57R403607329B	1	1/P	54	131							CN1	
4843309933	J-1-173981-5	1	1/P	53	371							CN41	
4843309934	J-6-173979-2	1	1/P	53	382							CN52	
4843309954	J-1B100-6102JN	1	1/P	51	674							CN14	
4843309960	J-S26B-PHDSS	1	1/P	54	132							CN2	
4843309962	J-IMSA-9202B103	1	1/P	52	602							J1	
4843309970	J-IMSA-9206H-T	1	1/P	52	601							J1	
4843390314	PWZ-KGPS-8S	1	10/P	10	52								
4843390841	BD/W-SKB-145P	1	5/P	13	45F	A	-	J	G01J708		DP2500 TWD		
4843390843	PWZ-KGLS-8RT	2	5/P	4	29								
4843390854	CLP/W-LWS-1U	1	5/P	10	46								
4843390855	CLP/W-LWS-2U	1	5/P	10	47								
4843390903	BD/W-SG-130	1	5/P	10	12								
4843390941	BD/W-EDS-1	2	10/P	10	45								
		1	10/P	11	47								
		1	10/P	13	27								
		1	10/P	15	36								
4843390942	BD/W-EDS-2	1	10/P	9	37						DP1600		
		1	10/P	17	26								
		1	10/P	22	37	A	-	J	G01C317		DP2000/2500		
4843391006	CLP/W-UAMS-02-0	1	5/P	8	26								
		1	5/P	12	24								
4843391164	BD/W-EDS-1717U	1	10/P	4	38								
		1	10/P	13	28								
4843391177	CLP/W-UAMS05S	2	5/P	12	26								
		3	5/P	13	36	F	-	J	G01B232		AUD, ASD, SAD, TWD/CND		
4843391391	CLP/W-UAMS-05-2	4	5/P	17	25								
		3	5/P	19	18								
4843391399	CLP/W-FGC-5	1	1/P	10	55B	A	-	J	G01C317		DP2000/2500		
4843391423	PWB/Z-WLS-18-0	2	5/P	10	11								
4843391431	PWB/Z-WLS-10-0	4	5/P	13	32						ASD/AUD/TWD/SAD		
4843391432	PWB/Z-WLS-12-0	1	5/P	4	22								
4843391476	PWB/Z-KGLS-8RF	1	5/P	4	28								
4843391496	BD/W-SKB-80MZ	1	10/P	5	12								
4843391499	CLP/W-UAMS05L46	4	10/P	22	48	A	-	J	G01C317		DP2000/2500		
4843391672	CLP/W-CKT-13SV0	1	5/P	4	8								
4843391725	CLP/W-WS-1NS	4	5/P	10	48								
		1	5/P	12	23								
		2	5/P	13	26								
4843391726	CLP/W-K-103G	1	5/P	7	24								
		1	5/P	12	25								
		2	5/P	15	19								
		1	5/P	19	17								
4843391727	WIRE/B-KG-010	2	5/P	13	29								
4843391729	CLP/W-CH-30	2	5/P	10	44								
		1	5/P	13	25								
4843391730	WIRE/B-T18R	2	5/P	8	25								
		2	5/P	14	20								
4843391764	FT-42117-2	1	1/D	10	50								
4843411993	CTP-MOB1H471KT	1	10/P	51	311							C161	
		1	10/P	51	312							C162	
		1	10/P	51	336							C186	
4843411997	CTP-MOB1H102KT	1	10/P	51	407							C257	
		1	10/P	51	575							C425	
		1	10/P	53	92							C32	
		1	10/P	53	93							C33	
		1	10/P	53	120							C60	
		1	10/P	54	40							C10	
4843412001	CTP-MOB1H222KT	1	10/P	51	330							C180	
		1	10/P	51	453							C303	
4843412009	CTP-MOB1H103KT	1	10/P	51	279							C129	
		1	10/P	53	137							C77	
		1	10/P	53	138							C78	
		1	10/P	53	139							C79	
4843412016	CTP-MOF1H473ZT	1	10/P	53	90							C30	
		1	10/P	53	105							C45	
		1	10/P	53	118							C58	
		1	10/P	53	121							C61	
		1	10/P	53	123							C63	

PARTS NO.	PARTS NAME	Q'TY / PAGE	Q'TY / PACK	PAGE	ITEM NO.	P	I	R	BSI NO.	SERIAL NO.	REMARKS	LOCATION	C
		1	10/P	53	148							C88	
4843412016	CTP-MOF1H473ZT	1	10/P	53	149							C89	
		1	10/P	53	151							C91	
		1	10/P	53	152							C92	
		1	10/P	53	160							C100	
		1	10/P	53	162							C102	
4843412073	CE-67C1C100M	1	5/P	51	151							C1	
		1	5/P	51	152							C2	
		1	5/P	51	153							C3	
		1	5/P	51	154							C4	
		1	5/P	51	155							C5	
		1	5/P	51	156							C6	
		1	5/P	51	157							C7	
		1	5/P	51	160							C10	
		1	5/P	51	161							C11	
		1	5/P	51	162							C12	
		1	5/P	51	163							C13	
		1	5/P	51	164							C14	
		1	5/P	51	165							C15	
		1	5/P	51	166							C16	
		1	5/P	51	167							C17	
		1	5/P	51	169							C19	
		1	5/P	51	170							C20	
		1	5/P	51	171							C21	
		1	5/P	51	172							C22	
		1	5/P	51	173							C23	
		1	5/P	51	174							C24	
		1	5/P	51	175							C25	
		1	5/P	51	176							C26	
		1	5/P	51	178							C28	
4843412074	CE-67C1C470M	1	5/P	51	158							C8	
		1	5/P	51	159							C9	
		1	5/P	51	168							C18	
4843413167	CTP-MOF1E104ZT	1	10/P	51	179							C29	
		1	10/P	51	180							C30	
		1	10/P	51	181							C31	
		1	10/P	51	182							C32	
		1	10/P	51	183							C33	
		1	10/P	51	184							C34	
		1	10/P	51	186							C36	
		1	10/P	51	194							C44	
		1	10/P	51	195							C45	
		1	10/P	51	196							C46	
		1	10/P	51	198							C48	
		1	10/P	51	205							C55	
		1	10/P	51	206							C56	
		1	10/P	51	208							C58	
		1	10/P	51	209							C59	
		1	10/P	51	210							C60	
		1	10/P	51	211							C61	
		1	10/P	51	213							C63	
		1	10/P	51	215							C65	
		1	10/P	51	216							C66	
		1	10/P	51	217							C67	
		1	10/P	51	219							C69	
		1	10/P	51	220							C70	
		1	10/P	51	221							C71	
		1	10/P	51	222							C72	
		1	10/P	51	223B	A	-	J	G01C317		DP2000/2500	C73	
		1	10/P	51	226							C76	
		1	10/P	51	228							C78	
		1	10/P	51	229							C79	
		1	10/P	51	231							C81	
		1	10/P	51	232							C82	
		1	10/P	51	233							C83	
		1	10/P	51	234							C84	
		1	10/P	51	235							C85	
		1	10/P	51	236							C86	
		1	10/P	51	237							C87	
		1	10/P	51	238							C88	

PARTS NO.	PARTS NAME	Q'TY / PAGE	Q'TY / PACK	PAGE	ITEM NO.	P	I	R	BSI NO.	SERIAL NO.	REMARKS	LOCATION	C
		1	10/P	51	240							C90	
4843413167	CTP-MOF1E104ZT	1	10/P	51	241							C91	
		1	10/P	51	243							C93	
		1	10/P	51	244							C94	
		1	10/P	51	249							C99	
		1	10/P	51	250							C100	
		1	10/P	51	251							C101	
		1	10/P	51	252							C102	
		1	10/P	51	254							C104	
		1	10/P	51	255							C105	
		1	10/P	51	257							C107	
		1	10/P	51	262							C112	
		1	10/P	51	263							C113	
		1	10/P	51	264							C114	
		1	10/P	51	268							C118	
		1	10/P	51	269							C119	
		1	10/P	51	270							C120	
		1	10/P	51	272							C122	
		1	10/P	51	273							C123	
		1	10/P	51	274							C124	
		1	10/P	51	275							C125	
		1	10/P	51	276							C126	
		1	10/P	51	277							C127	
		1	10/P	51	278							C128	
		1	10/P	51	280							C130	
		1	10/P	51	281							C131	
		1	10/P	51	282							C132	
		1	10/P	51	283							C133	
		1	10/P	51	285							C135	
		1	10/P	51	286							C136	
		1	10/P	51	287							C137	
		1	10/P	51	288							C138	
		1	10/P	51	289							C139	
		1	10/P	51	290							C140	
		1	10/P	51	291							C141	
		1	10/P	51	292							C142	
		1	10/P	51	293							C143	
		1	10/P	51	295							C145	
		1	10/P	51	297							C147	
		1	10/P	51	302							C152	
		1	10/P	51	303							C153	
		1	10/P	51	304							C154	
		1	10/P	51	305							C155	
		1	10/P	51	306							C156	
		1	10/P	51	310							C160	
		1	10/P	51	313							C163	
		1	10/P	51	314							C164	
		1	10/P	51	316							C166	
		1	10/P	51	317							C167	
		1	10/P	51	318							C168	
		1	10/P	51	320							C170	
		1	10/P	51	321							C171	
		1	10/P	51	322							C172	
		1	10/P	51	324							C174	
		1	10/P	51	325							C175	
		1	10/P	51	327							C177	
		1	10/P	51	332							C182	
		1	10/P	51	333							C183	
		1	10/P	51	337							C187	
		1	10/P	51	339							C189	
		1	10/P	51	341							C191	
		1	10/P	51	343							C193	
		1	10/P	51	345							C195	
		1	10/P	51	346							C196	
		1	10/P	51	347							C197	
		1	10/P	51	348							C198	
		1	10/P	51	349							C199	
		1	10/P	51	353							C203	
		1	10/P	51	354							C204	
		1	10/P	51	356							C206	

PARTS NO.	PARTS NAME	Q'TY / PAGE	Q'TY / PACK	PAGE	ITEM NO.	P	I	R	BSI NO.	SERIAL NO.	REMARKS	LOCATION	C
		1	10/P	51	357							C207	
4843413167	CTP-MOF1E104ZT	1	10/P	51	359							C209	
		1	10/P	51	361							C211	
		1	10/P	51	363							C213	
		1	10/P	51	365							C215	
		1	10/P	51	378							C228	
		1	10/P	51	380							C230	
		1	10/P	51	383							C233	
		1	10/P	51	385							C235	
		1	10/P	51	386							C236	
		1	10/P	51	388							C238	
		1	10/P	51	391							C241	
		1	10/P	51	397							C247	
		1	10/P	51	398							C248	
		1	10/P	51	400							C250	
		1	10/P	51	401							C251	
		1	10/P	51	402							C252	
		1	10/P	51	406							C256	
		1	10/P	51	408							C258	
		1	10/P	51	409							C259	
		1	10/P	51	411							C261	
		1	10/P	51	412							C262	
		1	10/P	51	414							C264	
		1	10/P	51	415							C265	
		1	10/P	51	416							C266	
		1	10/P	51	418							C268	
		1	10/P	51	419							C269	
		1	10/P	51	421							C271	
		1	10/P	51	422							C272	
		1	10/P	51	423							C273	
		1	10/P	51	424							C274	
		1	10/P	51	425							C275	
		1	10/P	51	426							C276	
		1	10/P	51	427							C277	
		1	10/P	51	428							C278	
		1	10/P	51	429							C279	
		1	10/P	51	432							C282	
		1	10/P	51	433							C283	
		1	10/P	51	436							C286	
		1	10/P	51	437							C287	
		1	10/P	51	438							C288	
		1	10/P	51	441							C291	
		1	10/P	51	442							C292	
		1	10/P	51	443							C293	
		1	10/P	51	445							C295	
		1	10/P	51	446							C296	
		1	10/P	51	447							C297	
		1	10/P	51	449							C299	
		1	10/P	51	452							C302	
		1	10/P	51	454							C304	
		1	10/P	51	455							C305	
		1	10/P	51	456							C306	
		1	10/P	51	457							C307	
		1	10/P	51	459							C309	
		1	10/P	51	460							C310	
		1	10/P	51	461							C311	
		1	10/P	51	462							C312	
		1	10/P	51	463							C313	
		1	10/P	51	467							C317	
		1	10/P	51	484							C334	
		1	10/P	51	485							C335	
		1	10/P	51	487							C337	
		1	10/P	51	489							C339	
		1	10/P	51	490							C340	
		1	10/P	51	492							C342	
		1	10/P	51	493							C343	
		1	10/P	51	494							C344	
		1	10/P	51	496							C346	
		1	10/P	51	497							C347	
		1	10/P	51	498							C348	

PARTS NO.	PARTS NAME	Q'TY / PAGE	Q'TY / PACK	PAGE	ITEM NO.	P	I	R	BSI NO.	SERIAL NO.	REMARKS	LOCATION	C
		1	10/P	51	499							C349	
4843413167	CTP-MOF1E104ZT	1	10/P	51	501							C351	
		1	10/P	51	503							C353	
		1	10/P	51	504							C354	
		1	10/P	51	505							C355	
		1	10/P	51	507							C357	
		1	10/P	51	509							C359	
		1	10/P	51	510							C360	
		1	10/P	51	511							C361	
		1	10/P	51	513							C363	
		1	10/P	51	514							C364	
		1	10/P	51	515							C365	
		1	10/P	51	516							C366	
		1	10/P	51	519							C369	
		1	10/P	51	529							C379	
		1	10/P	51	531							C381	
		1	10/P	51	532							C382	
		1	10/P	51	533							C383	
		1	10/P	51	535							C385	
		1	10/P	51	536							C386	
		1	10/P	51	538							C388	
		1	10/P	51	540							C390	
		1	10/P	51	541							C391	
		1	10/P	51	542							C392	
		1	10/P	51	543							C393	
		1	10/P	51	547							C397	
		1	10/P	51	548							C398	
		1	10/P	51	549							C399	
		1	10/P	51	551							C401	
		1	10/P	51	552							C402	
		1	10/P	51	553							C403	
		1	10/P	51	554							C404	
		1	10/P	51	555							C405	
		1	10/P	51	556							C406	
		1	10/P	51	558							C408	
		1	10/P	51	566							C416	
		1	10/P	51	567							C417	
		1	10/P	51	568							C418	
		1	10/P	51	569							C419	
		1	10/P	51	570							C420	
		1	10/P	51	571							C421	
		1	10/P	51	572							C422	
		1	10/P	51	574							C424	
		1	10/P	51	576							C426	
		1	10/P	51	577							C427	
		1	10/P	51	578							C428	
		1	10/P	51	579							C429	
		1	10/P	51	580							C430	
		1	10/P	51	581							C431	
		1	10/P	51	583							C433	
		1	10/P	51	584							C434	
		1	10/P	51	585							C435	
		1	10/P	51	587							C437	
		1	10/P	51	589							C439	
		1	10/P	51	590							C440	
		1	10/P	51	592							C442	
		1	10/P	51	594							C444	
		1	10/P	51	605							C455	
		1	10/P	51	607							C457	
		1	10/P	51	610							C460	
		1	10/P	51	612							C462	
		1	10/P	51	616							C466	
		1	10/P	51	618							C468	
		1	10/P	51	620							C470	
		1	10/P	51	622							C472	
		1	10/P	51	624							C474	
		1	10/P	51	625							C475	
		1	10/P	51	626							C476	
		1	10/P	51	628							C478	
		1	10/P	51	630							C480	

PARTS NO.	PARTS NAME	Q'TY / PAGE	Q'TY / PACK	PAGE	ITEM NO.	P	I	R	BSI NO.	SERIAL NO.	REMARKS	LOCATION	C
		1	10/P	51	631							C481	
4843413167	CTP-MOF1E104ZT	1	10/P	53	82							C22	
		1	10/P	53	83							C23	
		1	10/P	53	84							C24	
		1	10/P	53	85							C25	
		1	10/P	53	86							C26	
		1	10/P	53	87							C27	
		1	10/P	53	91							C31	
		1	10/P	53	94							C34	
		1	10/P	53	95							C35	
		1	10/P	53	97							C37	
		1	10/P	53	98							C38	
		1	10/P	53	99							C39	
		1	10/P	53	100							C40	
		1	10/P	53	101							C41	
		1	10/P	53	102							C42	
		1	10/P	53	106							C46	
		1	10/P	53	107							C47	
		1	10/P	53	109							C49	
		1	10/P	53	114							C54	
		1	10/P	53	115							C55	
		1	10/P	53	119							C59	
		1	10/P	53	122							C62	
		1	10/P	53	124							C64	
		1	10/P	53	132							C72	
		1	10/P	53	133							C73	
		1	10/P	53	135							C75	
		1	10/P	53	136							C76	
		1	10/P	53	140							C80	
		1	10/P	53	150							C90	
		1	10/P	53	153							C93	
		1	10/P	53	154							C94	
		1	10/P	53	155							C95	
		1	10/P	53	156							C96	
		1	10/P	53	159							C99	
		1	10/P	54	33							C3	
		1	10/P	54	34							C4	
		1	10/P	54	35							C5	
		1	10/P	54	38							C8	
		1	10/P	54	56							C26	
		1	10/P	54	57							C27	
4843413199	CTP-MOCH1H100DT	1	10/P	51	187							C37	
		1	10/P	51	188							C38	
		1	10/P	51	189							C39	
		1	10/P	51	190							C40	
		1	10/P	51	191							C41	
		1	10/P	51	192							C42	
		1	10/P	51	199							C49	
		1	10/P	51	200							C50	
		1	10/P	51	201							C51	
		1	10/P	51	202							C52	
		1	10/P	51	203							C53	
		1	10/P	51	204							C54	
		1	10/P	51	245							C95	
		1	10/P	51	246							C96	
		1	10/P	51	247							C97	
		1	10/P	51	248							C98	
		1	10/P	51	258							C108	
		1	10/P	51	259							C109	
		1	10/P	51	260							C110	
		1	10/P	51	261							C111	
		1	10/P	51	326							C176	
		1	10/P	51	350							C200	
		1	10/P	51	351							C201	
		1	10/P	51	352							C202	
		1	10/P	51	367							C217	
		1	10/P	51	368							C218	
		1	10/P	51	369							C219	
		1	10/P	51	370							C220	
		1	10/P	51	371							C221	

PARTS NO.	PARTS NAME	Q'TY / PAGE	Q'TY / PACK	PAGE	ITEM NO.	P	I	R	BSI NO.	SERIAL NO.	REMARKS	LOCATION	C
		1	10/P	51	372							C222	
4843413199	CTP-MOCH1H100DT	1	10/P	51	373							C223	
		1	10/P	51	374							C224	
		1	10/P	51	375							C225	
		1	10/P	51	376							C226	
		1	10/P	51	377							C227	
		1	10/P	51	405							C255	
		1	10/P	51	430							C280	
		1	10/P	51	431							C281	
		1	10/P	51	439							C289	
		1	10/P	51	440							C290	
		1	10/P	51	464							C314	
		1	10/P	51	465							C315	
		1	10/P	51	466							C316	
		1	10/P	51	468							C318	
		1	10/P	51	469							C319	
		1	10/P	51	470							C320	
		1	10/P	51	471							C321	
		1	10/P	51	472							C322	
		1	10/P	51	473							C323	
		1	10/P	51	474							C324	
		1	10/P	51	475							C325	
		1	10/P	51	476							C326	
		1	10/P	51	477							C327	
		1	10/P	51	478							C328	
		1	10/P	51	479							C329	
		1	10/P	51	480							C330	
		1	10/P	51	481							C331	
		1	10/P	51	482							C332	
		1	10/P	51	508							C358	
		1	10/P	51	544							C394	
		1	10/P	51	545							C395	
		1	10/P	51	546							C396	
		1	10/P	53	108							C48	
		1	10/P	53	110							C50	
		1	10/P	53	111							C51	
		1	10/P	53	112							C52	
		1	10/P	53	113							C53	
4843413306	CTP-CZCH1H120JT	1	10/P	51	300							C150	
4843413313	CTP-CZCH1H470JT	1	10/P	51	193							C43	
		1	10/P	51	224							C74	
		1	10/P	51	298							C148	
		1	10/P	51	299							C149	
		1	10/P	51	301							C151	
		1	10/P	51	307							C157	
		1	10/P	51	309							C159	
		1	10/P	51	328							C178	
		1	10/P	51	329							C179	
		1	10/P	51	331							C181	
		1	10/P	51	364							C214	
		1	10/P	51	404							C254	
		1	10/P	51	520							C370	
		1	10/P	51	521							C371	
		1	10/P	51	522							C372	
		1	10/P	51	523							C373	
		1	10/P	51	524							C374	
		1	10/P	51	525							C375	
		1	10/P	51	527							C377	
		1	10/P	51	528							C378	
		1	10/P	51	530							C380	
		1	10/P	51	534							C384	
		1	10/P	51	559							C409	
		1	10/P	51	560							C410	
		1	10/P	51	561							C411	
		1	10/P	51	562							C412	
		1	10/P	51	563							C413	
		1	10/P	51	564							C414	
		1	10/P	51	573							C423	
4843413317	CTP-CZCH1H101JT	1	10/P	51	214							C64	
		1	10/P	51	265							C115	

PARTS NO.	PARTS NAME	Q'TY / PAGE	Q'TY / PACK	PAGE	ITEM NO.	P	I	R	BSI NO.	SERIAL NO.	REMARKS	LOCATION	C
		1	10/P	51	308							C158	
4843413317	CTP-CZCH1H101JT	1	10/P	51	319							C169	
		1	10/P	51	323							C173	
		1	10/P	51	334							C184	
		1	10/P	51	335							C185	
		1	10/P	51	342							C192	
		1	10/P	51	344							C194	
		1	10/P	51	355							C205	
		1	10/P	51	358							C208	
		1	10/P	51	360							C210	
		1	10/P	51	389							C239	
		1	10/P	51	399							C249	
		1	10/P	51	403							C253	
		1	10/P	51	410							C260	
		1	10/P	51	417							C267	
		1	10/P	51	420							C270	
		1	10/P	51	434							C284	
		1	10/P	51	435							C285	
		1	10/P	51	444							C294	
		1	10/P	51	491							C341	
		1	10/P	51	537							C387	
		1	10/P	51	539							C389	
		1	10/P	51	591							C441	
		1	10/P	53	88							C28	
		1	10/P	53	89							C29	
		1	10/P	53	96							C36	
		1	10/P	53	103							C43	
		1	10/P	53	104							C44	
		1	10/P	53	116							C56	
		1	10/P	53	125							C65	
		1	10/P	53	126							C66	
		1	10/P	53	127							C67	
		1	10/P	53	128							C68	
		1	10/P	53	129							C69	
		1	10/P	53	130							C70	
		1	10/P	53	131							C71	
		1	10/P	53	134							C74	
4843413321	CTP-CZCH1H221JT	1	10/P	51	185							C35	
		1	10/P	51	197							C47	
		1	10/P	51	207							C57	
		1	10/P	51	225							C75	
		1	10/P	51	227							C77	
		1	10/P	51	230							C80	
		1	10/P	51	239							C89	
		1	10/P	51	242							C92	
		1	10/P	51	253							C103	
		1	10/P	51	256							C106	
		1	10/P	51	271							C121	
		1	10/P	51	284							C134	
		1	10/P	51	294							C144	
		1	10/P	51	296							C146	
		1	10/P	51	315							C165	
		1	10/P	51	340							C190	
		1	10/P	51	362							C212	
		1	10/P	51	366							C216	
		1	10/P	51	379							C229	
		1	10/P	51	381							C231	
		1	10/P	51	384							C234	
		1	10/P	51	387							C237	
		1	10/P	51	396							C246	
		1	10/P	51	413							C263	
		1	10/P	51	448							C298	
		1	10/P	51	450							C300	
		1	10/P	51	451							C301	
		1	10/P	51	483							C333	
		1	10/P	51	486							C336	
		1	10/P	51	488							C338	
		1	10/P	51	495							C345	
		1	10/P	51	500							C350	
		1	10/P	51	502							C352	

PARTS NO.	PARTS NAME	Q'TY / PAGE	Q'TY / PACK	PAGE	ITEM NO.	P	I	R	BSI NO.	SERIAL NO.	REMARKS	LOCATION	C
		1	10/P	51	506							C356	
4843413321	CTP-CZCH1H221JT	1	10/P	51	512							C362	
		1	10/P	51	517							C367	
		1	10/P	51	518							C368	
		1	10/P	51	550							C400	
		1	10/P	51	557							C407	
		1	10/P	51	565							C415	
		1	10/P	51	582							C432	
		1	10/P	51	586							C436	
		1	10/P	51	588							C438	
		1	10/P	51	595							C445	
		1	10/P	51	596							C446	
		1	10/P	51	597							C447	
		1	10/P	51	598							C448	
		1	10/P	51	599							C449	
		1	10/P	51	600							C450	
		1	10/P	51	601							C451	
		1	10/P	51	602							C452	
		1	10/P	51	603							C453	
		1	10/P	51	604							C454	
		1	10/P	51	606							C456	
		1	10/P	51	611							C461	
		1	10/P	51	613							C463	
		1	10/P	51	614							C464	
		1	10/P	51	615							C465	
		1	10/P	51	617							C467	
		1	10/P	51	619							C469	
		1	10/P	51	621							C471	
		1	10/P	51	623							C473	
		1	10/P	51	629							C479	
		1	10/P	51	632							C482	
		1	10/P	51	633							C483	
		1	10/P	53	141							C81	
		1	10/P	53	142							C82	
		1	10/P	53	143							C83	
		1	10/P	53	144							C84	
		1	10/P	53	145							C85	
		1	10/P	53	146							C86	
		1	10/P	53	147							C87	
		1	10/P	53	157							C97	
		1	10/P	53	158							C98	
		1	10/P	53	161							C101	
		1	10/P	54	39							C9	
		1	10/P	54	41							C11	
		1	10/P	54	42							C12	
		1	10/P	54	43							C13	
		1	10/P	54	44							C14	
		1	10/P	54	45							C15	
		1	10/P	54	46							C16	
		1	10/P	54	47							C17	
		1	10/P	54	48							C18	
		1	10/P	54	49							C19	
		1	10/P	54	50							C20	
		1	10/P	54	51							C21	
		1	10/P	54	52							C22	
		1	10/P	54	53							C23	
		1	10/P	54	54							C24	
		1	10/P	54	55							C25	
4843413736	CE-04WG1H106MB	1	10/P	53	69							C9	
4843414041	CTP-EHHG1C226MT	1	10/P	51	177							C27	
4843414054	CTP-COCH1H300JT	1	10/P	51	392							C242	
		1	10/P	51	393							C243	
4843414088	CTP-EHHG1A227MT	1	10/P	54	31							C1	
		1	10/P	54	32							C2	
4843414115	CTP-KOBJ1A224KT	1	10/P	51	593							C443	
4843524918	BT-CR2450-HE4	1	1/C	52	691							SY1	
4843524930	FL-BK2125HM601T	1	5/P	52	581							FB1	
		1	5/P	52	582							FB2	
4843524942	LTP-SLF104701R4	1	5/P	52	671							L1	
4843524966	FL-BLM11A121SPT	1	5/P	52	583							FB3	

PARTS NO.	PARTS NAME	Q'TY / PAGE	Q'TY / PACK	PAGE	ITEM NO.	P	I	R	BSI NO.	SERIAL NO.	REMARKS	LOCATION	C
4849300006	IC-NJM386M(TE3)	1	1/S	53	17							IC7	
4849300025	IC-NJM4558M(T1)	1	1/S	51	11							IC1	
4849300028	IC-MC74HC125AFR	1	5/S	51	50							IC40	
4849300030	IC-74ACT1284MSA	1	1/S	54	11							IC1	
4849300033	IC-74FCT163245P	1	5/S	51	37							IC27	
4849300034	IC-SN74F38NSR	1	5/S	51	89							IC79	
4849300037	IC-D9011XI	1	1/S	51	78							IC68	
4849300063	CE-04WQ1A107MF	1	5/P	53	78							C18	
		1	5/P	53	79							C19	
4849300064	CE-04WQ1C106MF	1	5/P	53	66							C6	
		1	5/P	53	75							C15	
4849300068	CE-04WQ1E226MF	1	5/P	53	62							C2	
		1	5/P	53	63							C3	
		1	5/P	53	64							C4	
		1	5/P	53	76							C16	
4849300069	CE-04WQ1E476MF	1	5/P	53	70							C10	
		1	5/P	53	71							C11	
		1	5/P	53	72							C12	
		1	5/P	53	73							C13	
4849300070	CE-04WQ1V475MF	1	5/P	53	65							C5	
4849300071	CE-04WQ1V107MF	1	5/P	53	80							C20	
		1	5/P	53	81							C21	
4849300073	CE-04WQ1H226MF	1	5/P	53	61							C1	
		1	5/P	53	67							C7	
		1	5/P	53	68							C8	
		1	5/P	53	74							C14	
		1	5/P	53	77							C17	
4849300084	X-MX38T32.768K5	1	1/C	52	625							X5	
4849300087	IC-EC-A957	1	1/S	51	16							IC6	
		1	1/S	51	17							IC7	
4849300089	IC-EC-N023	1	1/S	51	44							IC34	
4849300090	IC-EC-N024	1	1/S	51	46							IC36	
4849300108	IC-XC6361A332SR	1	5/S	51	32							IC22	
4849300128	IC-SN74LVC74ANS	1	5/S	51	91							IC81	
		1	5/S	51	93							IC83	
		1	5/S	51	94							IC84	
		1	5/S	51	98							IC88	
4849300129	IC-EC-N027	1	1/S	51	59							IC49	
4849300130	IC-SN74LV245APW	1	5/S	51	38							IC28	
		1	5/S	51	95							IC85	
		1	5/S	51	96							IC86	
		1	5/S	51	97							IC87	
4849300136	IC-SN74HCT244NS	1	5/S	51	18							IC8	
4849300158	IC-EC-N034	1	1/S	51	59-1	C	B	D	G01B282			IC49	
66061613	PS-ZT1600	1	SUPPLY	101	2A	A	-	J	G01K784		DP1600 (NAD)		
66061614	PS-ZT1600E	1	SUPPLY	101	2B	A	-	J	G01K784		DP1600 (MJD)		
66061615	PS-ZT1600D	1	SUPPLY	101	2C	A	-	J	G01K784		DP1600 (ASD, AUD, TWD, SAD)		
66061616	PS-ZT1600C	1	SUPPLY	101	2D	A	-	J	G01K784		DP1600 (CND)		
66061617	PS-ZT2500	1	SUPPLY	101	2E	A	-	J	G01K784		DP2000/2500 (NAD)		
66061618	PS-ZT2500E	1	SUPPLY	101	2F	A	-	J	G01K784		DP2000/2500 (MJD)		
66061619	PS-ZT2500D	1	SUPPLY	101	2G	A	-	J	G01K784		DP2000/2500 (ASD, AUD, TWD, SAD)		
66061620	PS-ZT2500C	1	SUPPLY	101	2H	A	-	J	G01K784		DP2000/2500 (CND)		
66089599	STAPLE-1600	1	SUPPLY	101	8	A	-	J	G01K784				
66099416	MY-1017	1	SUPPLY	101	4A	A	-	J	G01K784		NAD, MJD, AUD		
66099417	MY-1017-N	1	SUPPLY	101	4B	A	-	J	G01K784		ASD, SAD, TWD		
66099443	GC-1050	1	SUPPLY	101	7A	A	-	J	G01K784		NAD, MJD, AUD		
66099468	GC-1050-N	1	SUPPLY	101	7B	A	-	J	G01K784		ASD, SAD, TWD		
66099481	MH-1600L	1	SUPPLY	101	5	A	-	J	G01K784				
66099482	MH-1600H	1	SUPPLY	101	6	A	-	J	G01K784				
66099488	MY-1017-C	1	SUPPLY	101	4C	A	-	J	G01K784		CND		
66099493	GC-1050-C	1	SUPPLY	101	7C	A	-	J	G01K784		CND		
7040300311	PAN30*03MSZN3AI	1	50/P	11	108								
7043300515	BID30*05MSNI3CI	13	10/P	3	52								
		6	10/P	3	53								
		2	10/P	6	54								
7043400813	BID40*08MSCR1AI	1	50/P	13	55								
7402204031	2TWAS40SKZN3A	4	50/P	18	53								
		0	50/P	18	53-1	B	-	E	G01B284				
7405004031	ERR040SKZN3A	1	50/P	4	56								
		2	50/P	5	58								

PARTS NO.	PARTS NAME	Q'TY / PAGE	Q'TY / PACK	PAGE	ITEM NO.	P	I	R	BSI NO.	SERIAL NO.	REMARKS	LOCATION	C
		4	50/P	22	105	A	-	J	G01C317		DP2000/2500		
7405007031	ERR070SKZN3A	2	50/P	5	53								
7620300641	ZPAN30*06MSZN3A	3	50/P	4	53								
		6	50/P	5	57								
		6	50/P	5	57A	-	-	-	G01C317		DP1600		
		12	50/P	5	57B	A	-	J	G01C317		DP2000/2500		
7640200651	ZPAN20*06MSZN3A	2	10/P	5	54								

TOSHIBA

TOSHIBA TEC CORPORATION
1-1, KANDA NISHIKI-CHO, CHIYODA-KU, TOKYO, 101-8842 JAPAN