SHARP PARTS GUIDE

CODE:00ZMXC306WPG1

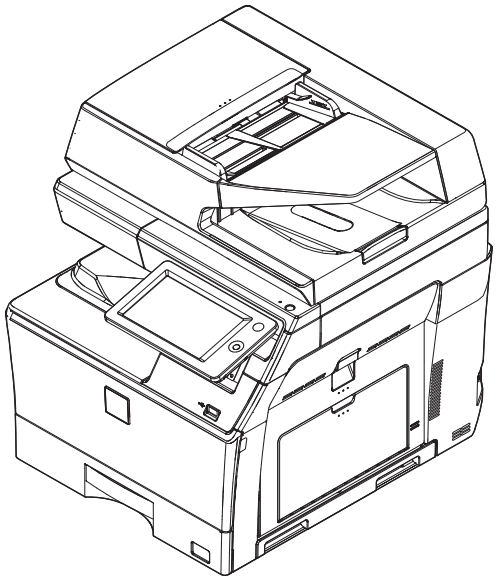

デジタルフルカラー複合機
DIGITAL FULL COLOR MULTIFUNCTIONAL SYSTEM

MODEL MX-C306W
MX-C305W
MX-C304W
MX-C303W

このパーツガイドに掲載されている表示価格ランクは消費税抜きです。

CONTENTS

SHARP CORPORATION

仕向地インデックス (Destination index)

マトリックスに記載している地域名について、各々の国がどの地域に該当するかは、下記表を参照する事。

Regarding the name of regions listed on matrix, refer to the table below to figure out which country belongs to which region.

Classification by the large area (大分類)	Classification by the small area (小分類)	Country(国)	Classification by the voltage	Classification by the Paper standard
Japan	Japan	Japan	100V	AB series
Americas	Americas1	U.S.A. / Canada / Mexico / Latin America(120V)	120V	Inch series
Europe	Europe1	United Kingdom / Germany / Spain / France / Italy / Netherlands / Switzerland / Sweden / Denmark / Finland / Norway	220-240V	AB series
	Europe2	Greek / Cyprus / Turkish / Polish / Hungarian / Czech / Slovak / Romania / Latvia / Portugal / Austria / Poland	220-240V	AB series

Note for use of Parts Guide

◎ How to see the parts guide:

・For the parts that the parts number in the parts list is 900s, it represents the entire unit. For the parts that the parts number in the parts list is 500s, it represents the sub unit (a part of the unit in the unit).
・If there is no enclosure line showing the range of the unit, all parts illustrated on that page are contained in the unit.
・However, the parts with the void number are excluded from the unit.
・Parts with “N” listed in NEW MARK section represent the new parts that have never been listed in any Parts Guides issued in the past However, even the parts with no “N” mark could be the new parts as the products taken up may differ depending on the countries.
・Parts with “*” listed in PRICE RANK are procured by SMF(Sharp Manufacturing France S.A.).
When the service parts are required, please contact the local SHARP subsidiary.
・Parts with ” ♣ ” mark has Matrix table by destination.
・Parts code with ” ◆ ” mark is the dedicated parts code for Service.

◎ Note when replacing the parts

Be sure to use the autorized parts to assure the safety and reliability.
Since the parts marked with "⚠" is indispensable for the machine safety maintenance and operation, it must be replaced with the parts specific to the product specification.

◎ Definition of PART RANK

Rank indicating the importance level of the parts is listed in PART RANK section.
The purpose of this rank is to help the stock control of the repair parts in the fields to be appropiately managed.

Rank A : Maintenance parts, and consumable parts which are not included in but closely related to maintenance parts
Rank B : Performance/function parts (sensors, clutches, and other electrical parts), consumable parts
Rank E : Unit parts including PWB
Rank D : Preparation parts (External fitting, packing, parts packed together)
Rank C : Parts other than the above (excluding sub components of PWB)

◎ Information about the design change

・New & Addition, Change, Abolition, and Quantity change are expressed with the marks shown in the table below, and those marks are listed at the left side of Part code and also the number section in the illustration.

New & Addition	N	Abolition	☒	Q'uantity (increase) Other	☆
Change	↻	Correction	C	Q'uantity (decrease)	★

◎ Implementation timing of design change

・The time that the design change is implemented is listed in Effective time section.
・If “RC: Running Chane” is listed after the date of Effective time, the parts are replaced with the new parts when the old parts are depleted after the effective time.
*17/Oct RC: it indicates that the parts was replaced in mid-October 2017 production or later.

◎ Interchanegeability of the parts at the time of design change

・Interchangeability between the old and new parts when the design change is implemented is expressed by No1~6 as shown in Interchange section.

1	Interchangeable
2	Current type can be used in place of new type. New type cannot be used in place of current type.
3	Current type cannot be used in place of new type. New type can be used in place of current type.
4	Not interchangeable
5	Interchangeable if replaced with same types of related parts in use.
6	Others

◎ Reason of the design change

・The purpose of the design change is listed in Reason for change section.
・If No. of Technical Report is listed in Reason for change section, please refer to the applicable Technical Report for the detail.

パーツガイド活用時の注意事項

◎パーツガイドの見方

・パーツリストの No. が 900 番台となっているパーツは、unit 全体を表します。また、No. が 500 番台となっているパーツは、サブユニット（ユニットの中の一部のユニット）となります。
・ユニットの範囲を表す囲み線が無い場合は、そのページに記載されているパーツ全てが、ユニットに含まれます。
・但し、ナンバーが白抜きのパーツは、ユニットのなかに含まれません。
・新部品マークの欄に「N」と記載されているパーツは、過去に発行されたパーツガイドに一度も記載された事の無い新規パーツである事を意味します。
　但し、販売店によって取り上げられている製品が異なる場合がある為、「N」と記載されていないパーツでも、新規パーツとなる場合があります。
・♣マークがあるパーツは、仕向地別 Matrix 表があることを意味しています。
・◆マークがあるパーツは、サービス専用のパーツコードであることを意味しています。

◎パーツ交換時の注意事項

安全性・信頼性確保のため、部品は、必ず正規のものをご使用下さい。
⚠ 印の部品は、安全上重要な部品です。交換をする時は、安全及び性能維持のため必ず指定の部品をご使用下さい。

◎パーツのランク付

パーツランクの欄には、パーツの重要度を示すランクを記載しています。
このランクは、市場における補修部品の在庫管理が、適正に運営出来る手助けとなることを、目的とします。
　A ランク: メンテナンスパーツ、メンテナンスパーツには入っていないがメンテナンスパーツに近い消耗パーツ
　B ランク: 性能・機能パーツ（センサー、クラッチ等の電気パーツ）、消耗パーツ
　E ランク: 基板を含むユニットパーツ
　D ランク: 整備パーツ（外装、パッキング、同梱パーツ）
　C ランク: 上記ランク以外のパーツ（基板の子部品を除いたもの）

◎設計変更に関する情報

・部品の追加・変更・廃止・員数の増減等の変更は、下表のマークで表現しており、パーツコードの左側、また、イラストのナンバー部分に記載しています。

新規追加	N	廃　　止	☒	員数増・その他	☆
変　　更	♻	パーツ修正	C	員数減	★

◎設計変更の実施時期

・設計変更が実施された時期については、変更月の欄に記載しています。
・実施時期の年月の後に、「RC: ランニングチェンジ」として記載している場合は、実施時期以降に旧部品在庫が無くなった時点で新部品に切り替えられています。
　※17/Oct RC：2017 年 10 月生産途中以降に変更されたことを意味します

◎設計変更時のパーツの互換性

・設計変更を行った場合の新旧部品の互換性は、互換性の欄に記載しており、下表の通り、No.1 ～ 6 で表現しております。

1	新・旧の互換性有り。
2	新の代わりに旧は使用可。 旧の代わりに新は使用不可。
3	新の代わりに旧は使用不可。 旧の代わりに新は使用可。
4	新・旧の互換性無。
5	旧 (a,b,c…) どうし一対、又は、新 (a,b,c…) どうし一対で、互換性有。
6	その他

◎設計変更の理由

・設計変更を行った目的については、変更理由の欄に記載しています。
・変更理由の欄に Service Information/Technical Report のナンバーが記載されている場合は、その Service Information/Technical Report にて変更内容をご確認下さい。

【A10】
外装 1(Exteriors 1)

NO.	PARTS CODE	PRICE RANK Ex.	PRICE RANK Ja.	DESCRIPTION		Inter-change	Reason for change	Effective time
1	GCAB−0310QSZZ	BA	FX	Rear cabinet upper	後ｷｬﾋﾞ上			
2	XEBS730P10000	AC	DD	Screw(3×10)	ﾋﾞｽ			
3	PSHEP6069FCA1	AF	DS	Separate guide sheet R	分離ｶﾞｲﾄﾞｼｰﾄR			
4	XHBS740P08000	AA	DD	Screw(4×8)	ﾋﾞｽ			
5	XHBS730P06000	AC	DD	Screw(3×6)	ﾋﾞｽ			
6	XHBS730P08000	AB	DD	Screw(3×8)	ﾋﾞｽ			
7	GCAB−0300QSZZ	AZ	FQ	Scanner right cover	ｽｷｬﾅｰ右ｶﾊﾞｰ			
8 ♣	CCAB−0298QS01	AZ	FX	Scanner front cover upper right	ｽｷｬﾅｰ前ｶﾊﾞｰ上右			
	CCAB−0298QS02	BA	FX	Scanner front cover upper right	ｽｷｬﾅｰ前ｶﾊﾞｰ上右			
9	GCAB−0296QSZZ	AW	FG	Scanner front cover upper left	ｽｷｬﾅｰ前ｶﾊﾞｰ上左			
10	GCAB−0297QSZZ	AY	FQ	Scanner front cover lower left	ｽｷｬﾅｰ前ｶﾊﾞｰ下左			
11	PLNS−0105FCAZ	AC	DJ	PS key lens	電源ｷｰﾚﾝｽﾞ			
12	CBTN−0322FC02	AR	EQ	Power key	電源ｷｰ			
⚠ 13	CPWBF0335US51	AV	FG	PW-KEY PWB	PW-KEY 基板			
14	GCAB−0301QSZZ	AV	FG	Scanner right cover front	ｽｷｬﾅｰ右ｶﾊﾞｰ前			
15	PLNS−0036QSZZ	AP	EQ	LED lens	LED ﾚﾝｽﾞ			
⚠ 16	CPWBF2195GS54	AR	EQ	Front LED_R PWB	ﾌﾛﾝﾄ LED_R 基板			
⚠ 17	CPWBF2195GS53	AR	EQ	Front LED_G PWB	ﾌﾛﾝﾄ LED_G 基板			
18	GCAB−0299QSZZ	BA	FX	Scanner front cover lower right	ｽｷｬﾅｰ前ｶﾊﾞｰ下右			
19	GCOV−0163QSZZ	AW	FG	Information lamp	お知らせﾗﾝﾌﾟ			
20 ♣	TLABH5845FCZZ	AF	DS	Copy prohibition caution label	ｺﾋﾟｰ禁止注意ﾗﾍﾞﾙ			
	TLABH5846FCZZ	AG	DS	Copy prohibition caution label	ｺﾋﾟｰ禁止注意ﾗﾍﾞﾙ			

Matrix

No.8	ｽｷｬﾅｰ前ｶﾊﾞｰ上右 (Scanner front cover upper right)	
PARTS CODE	Americas Europe	Japan
CCAB−0298QS01	1st Lot	
CCAB−0298QS02		1st Lot

No.20	ｺﾋﾟｰ禁止注意ﾗﾍﾞﾙ (Copy prohibition caution label)	
PARTS CODE	Americas Europe	Japan
TLABH5845FCZZ	1st Lot	
TLABH5846FCZZ		1st Lot

【A10】
外装 1(Exteriors 1)

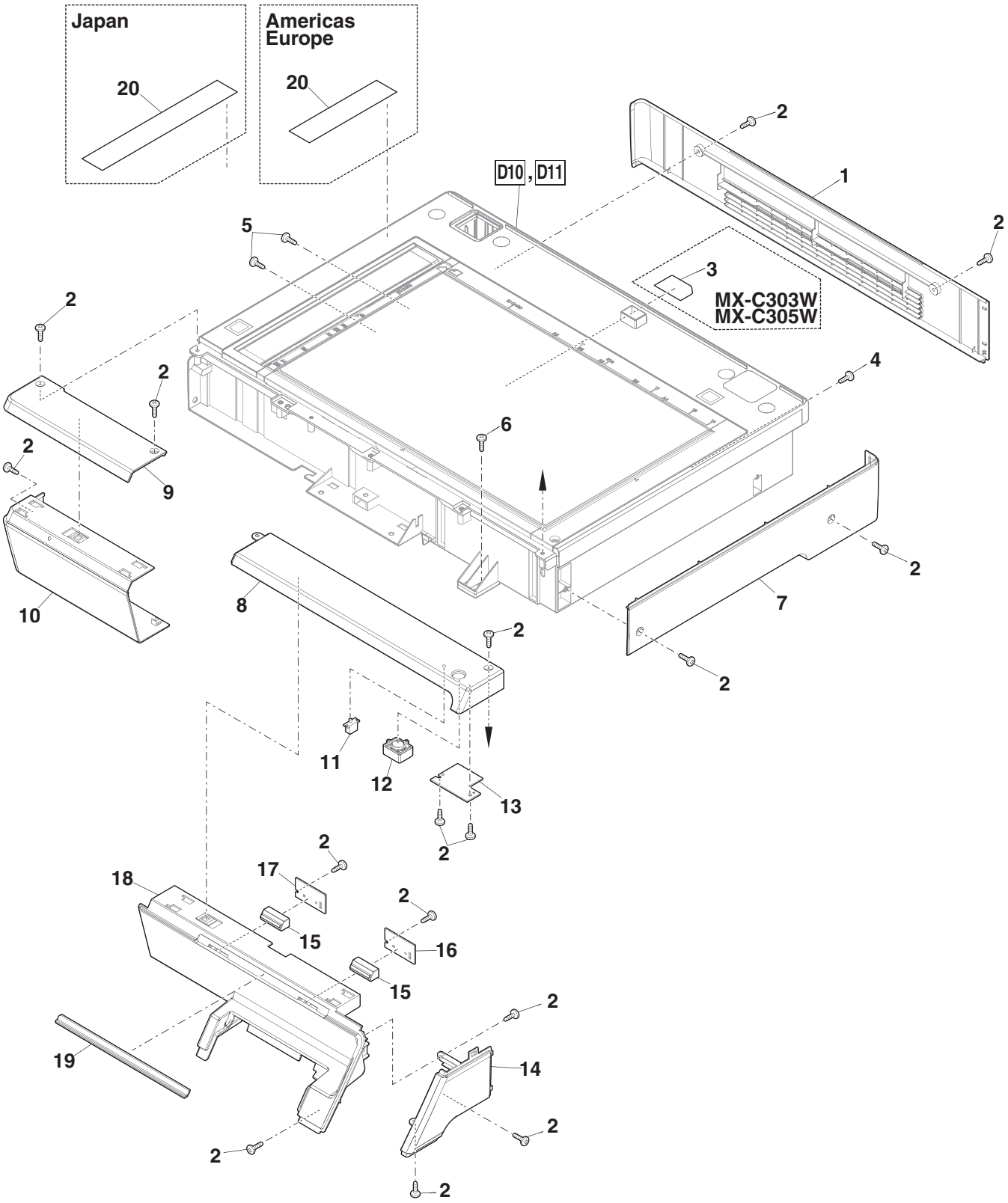

【A11】
外装 2(Exteriors 2)

NO.	PARTS CODE	PRICE RANK Ex.	PRICE RANK Ja.	DESCRIPTION		Inter-change	Reason for change	Effective time
1	GCAB-0311QSZZ	AZ	FQ	Delivery tray rear	排紙ﾄﾚｲ後			
2	XHBS730P06000	AC	DD	Screw(3×6)	ﾋﾞｽ			
3	GCAB-0309QSZZ	BH	GX	Rear cabinet	後ｷｬﾋﾞ			
4	XHBS730P08000	AB	DD	Screw(3×8)	ﾋﾞｽ			
5	TCAUA1080FCZZ	AD	DJ	Service caution label	ｻｰﾋﾞｽ注意ﾗﾍﾞﾙ			
6	XEBS740P10000	AA	DD	Screw(4×10)	ﾋﾞｽ			
7	GCAB-0306QSZZ	BB	GD	Right cabinet rear	右ｷｬﾋﾞ後			
8	GCAB-0313QSZZ	AY	FQ	Right cabinet rear upper	右ｷｬﾋﾞ後上			
9	PCŌVP0312QSZZ	AZ	FQ	Delivery upper cover	排紙上ｶﾊﾞｰ			
10	GCAB-0305QSZZ	AX	FG	Right cabinet middle	右ｷｬﾋﾞ中			
11	XEBS730P10000	AC	DD	Screw(3×10)	ﾋﾞｽ			
12	GCAB-0303QSZZ	AZ	FX	Front cabinet upper	前ｷｬﾋﾞ上			
13	GCAB-0304QSZZ	AY	FQ	Right cabinet front	右ｷｬﾋﾞ前			
14	PRNGP0081FCZ1	AB	DJ	Resin ring(E4)	樹脂ﾘﾝｸﾞ			
15	MHNG-0035QSZ1	AE	DJ	Front cabinet hinge R	前ｷｬﾋﾞﾋﾝｼﾞ R			
16	XEBS740P08000	AA	DD	Screw(4×8)	ﾋﾞｽ			
17	LBNDZ0090FCZZ	AD	DJ	Front cabinet band	前ｷｬﾋﾞﾊﾞﾝﾄﾞ			
18	GCAB-0302QSZ1	BE	GN	Front cabinet	前ｷｬﾋﾞ			
19 ♣	CBDGD0012QS01	AW	FG	Model name plate	機種名ﾌﾟﾚｰﾄ			
	CBDGD0012QS02	AW	FG	Model name plate	機種名ﾌﾟﾚｰﾄ			
	CBDGD0012QS03	AW	FG	Model name plate	機種名ﾌﾟﾚｰﾄ			
	CBDGD0012QS04	AW	FG	Model name plate	機種名ﾌﾟﾚｰﾄ			
20	HBDGD0064FCZZ	AN	EG	Front cabinet badge	前ｷｬﾋﾞﾊﾞｯｼﾞ			
21	TLABH1130QSZZ	AX	FG	Cleaning procedure label	ｸﾘｰﾆﾝｸﾞ手順ﾗﾍﾞﾙ			
22	PBARP0001QSZZ	AG	DS	LSU cleaning bar	LSU ｸﾘｰﾆﾝｸﾞ棒			
23	UCLEZ0024QSZZ	AE	DJ	LSU cleaning paper	LSU ｸﾘｰﾆﾝｸﾞﾍﾟｰﾊﾟｰ			
24	MHNG-0034QSZZ	AE	DJ	Front cabinet hinge L	前ｷｬﾋﾞﾋﾝｼﾞ L			
25	GCAB-0307QSZZ	BF	GN	Left cabinet	左ｷｬﾋﾞ			
26	GCAB-0308QSZZ	AW	FG	Left cabinet upper	左ｷｬﾋﾞ上			
27	LSŌU-0093QSZ1	BF	GN	Delivery tray	排紙ﾄﾚｲ			
28	LSŌU-0071QSAZ	AN	EG	Delivery support slide tray B	排紙補助ｽﾗｲﾄﾞﾄﾚｲ B			
29	LSŌU-0070QSAZ	AN	EG	Delivery support slide tray A	排紙補助ｽﾗｲﾄﾞﾄﾚｲ A			
501	CCLEZ0024US51	AN	EG	LSU cleaning unit	LSU ｸﾘｰﾆﾝｸﾞﾕﾆｯﾄ			

Matrix

No.19	機種名ﾌﾟﾚｰﾄ (Model name plate)			
PARTS CODE	MX-C304W	MX-C303W	MX-C306W	MX-C305W
CBDGD0012QS01		1st Lot		
CBDGD0012QS02	1st Lot			
CBDGD0012QS03				1st Lot
CBDGD0012QS04			1st Lot	

【A11】
外装 2(Exteriors 2)

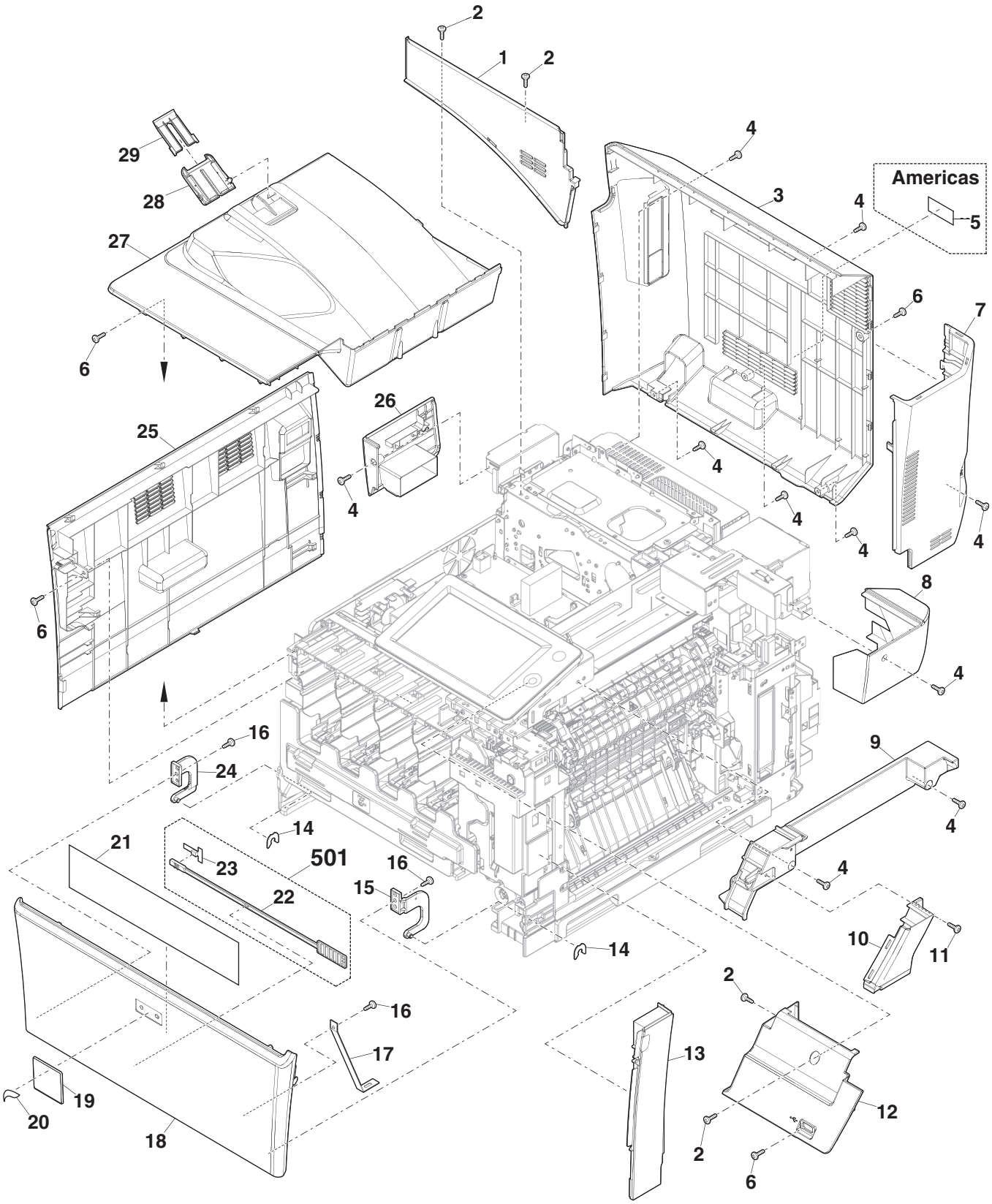

【A20】
操作ﾊﾟﾈﾙﾕﾆｯﾄ (Operation panel unit)

NO.	PARTS CODE	PRICE RANK Ex.	PRICE RANK Ja.	DESCRIPTION		Inter-change	Reason for change	Effective time
1	ＣＣＡＢ－１６６９ＦＣ０２	BB	GD	Operation cabinet	操作部ｷｬﾋﾞ			
♣	ＣＣＡＢ－１６６９ＦＣ０４	BB	GD	Operation cabinet	操作部ｷｬﾋﾞ			
2	ＰＦｉＬＷ０４００ＦＣＺＺ	AD	DJ	Home key filter	ﾎｰﾑｷｰﾌｨﾙﾀｰ			
⚠ 3	ＣＰＷＢＮ０３３６ＱＳ５２	BE	GN	Home key PWB	ﾎｰﾑｷｰ基板			
4	ＨＰＮＬＨ００９５ＱＳＰＺ	BM	HR	Touch panel	ﾀｯﾁﾊﾟﾈﾙ			
5	ＰＴＰＥＨ０１２３ＱＳＺＺ	AQ	EQ	Touch panel sheet	ﾀｯﾁﾊﾟﾈﾙｼｰﾄ			
6	ＸＥＢＳ７３０Ｐ０８０００	AC	DD	Screw(3×8)	ﾋﾞｽ			
7	ＬＨＬＤＺ２６８２ＦＣＺＺ	AT	EZ	LCD holder A	LCD ﾎﾙﾀﾞｰ A			
8	ＶＶＬ０７０ＢＡＣＭ１－１	BZ	TF	LCD	LCD			
9	ＬＨＬＤＺ０３４２ＱＳＺＺ	AX	FQ	LCD holder	LCD ﾎﾙﾀﾞｰ			
10	ＭＳＰＲＰ３００９ＦＣＺＺ	AD	DJ	LCD earth plate	LCD 用ｱｰｽ板			
⚠ 11	ＣＰＷＢＸ０３２６ＱＳ５１	BL	HR	LCD I/F PWB	LCD I/F 基板			
12	ＰＳＨＥＰ１１１６ＱＳＺＺ			Sheet	ｼｰﾄ			
	(Unit)							
901	ＣＣＡＢ－１６６９ＦＣ５３	CA	TX	Operation panel unit	操作ﾊﾟﾈﾙﾕﾆｯﾄ			
♣	ＣＣＡＢ－１６６９ＦＣ５４	CA	TV	Operation panel unit	操作ﾊﾟﾈﾙﾕﾆｯﾄ			

Matrix

No.1	操作部ｷｬﾋﾞ (Operation cabinet)	
PARTS CODE	Americas Europe	Japan
ＣＣＡＢ－１６６９ＦＣ０２	1st Lot	
ＣＣＡＢ－１６６９ＦＣ０４		1st Lot

No.901	操作ﾊﾟﾈﾙﾕﾆｯﾄ(Operation panel unit)	
PARTS CODE	Americas Europe	Japan
ＣＣＡＢ－１６６９ＦＣ５３	1st Lot	
ＣＣＡＢ－１６６９ＦＣ５４		1st Lot

【A20】
操作ﾊﾟﾈﾙﾕﾆｯﾄ (Operation panel unit)

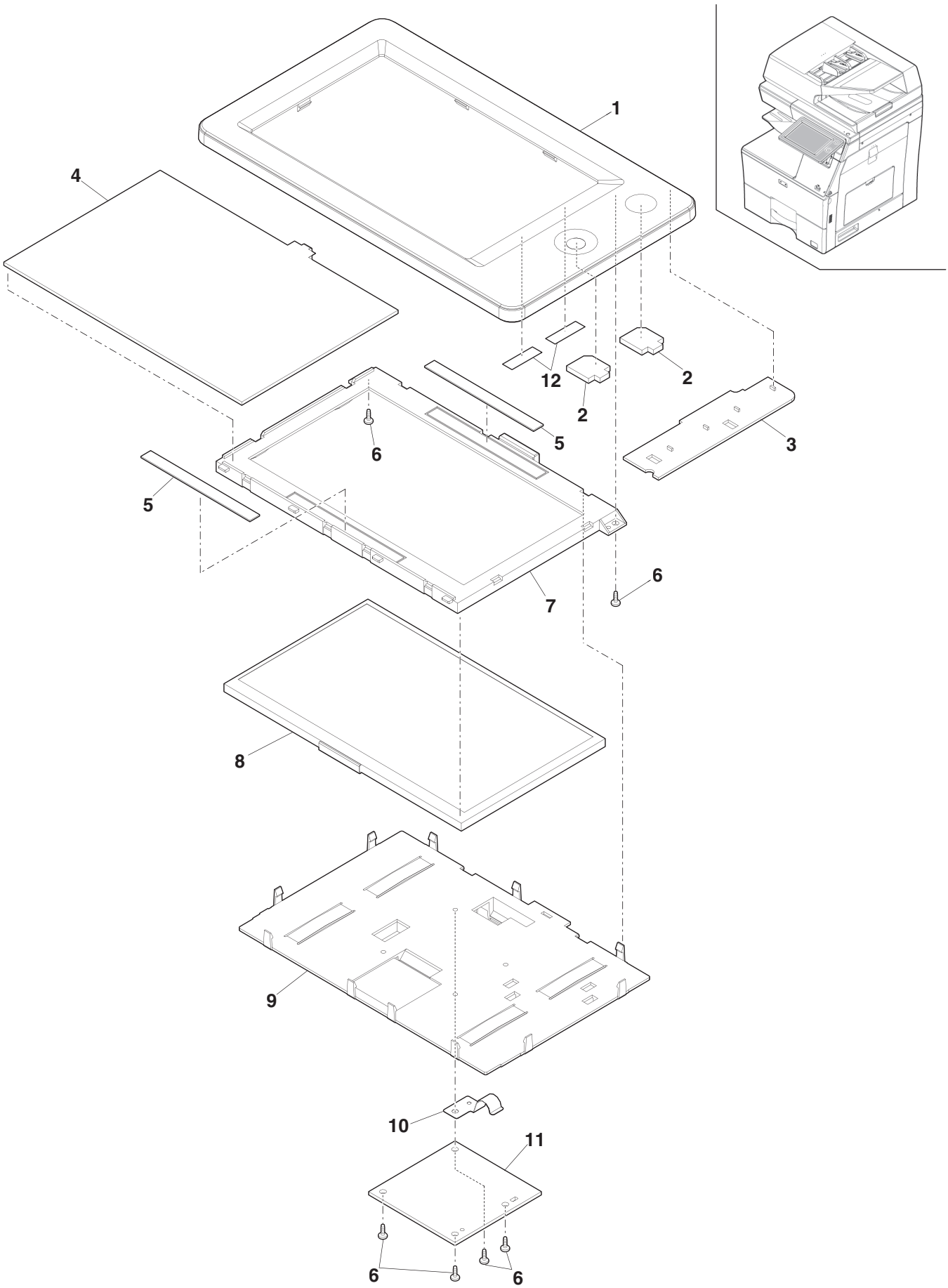

【C10】

DSPF 外装部 (DSPF Exteriors)[MX-C304W,MX-C306W]

NO.	PARTS CODE	PRICE RANK Ex.	PRICE RANK Ja.	DESCRIPTION		Inter-change	Reason for change	Effective time
1	XHBS730P06000	AC	DD	Screw(3×6)	ﾋﾞｽ			
⚠ 2	CPWBX0327QS54	BX	TF	DSPF control PWB	DSPF ｺﾝﾄﾛｰﾙ基板			
⚠ ♣	CPWBX0327QS55	BX	TF	DSPF control PWB	DSPF ｺﾝﾄﾛｰﾙ基板			
3	XEBS730P08000	AC	DD	Screw(3×8)	ﾋﾞｽ			
4	LPLTM1012QSZZ	AX	FQ	PWB bracket	基板ﾌﾞﾗｹｯﾄ			
5	PGSK-0077FCZZ	AE	DS	Gasket FL	ｶﾞｽｹｯﾄ FL			
7	PCOVP0270QSZZ	AX	FQ	decorative cover L	化粧ｶﾊﾞｰ L			
8	GCAB-0265QSZ1	BA	FX	Rear case	後ｹｰｽ			
9	XEBS730P10000	AC	DD	Screw(3×10)	ﾋﾞｽ			
10	MHNG-0043QSZZ	BK	HG	ADF hinge L	ADF ﾋﾝｼﾞ L			
11	XEBS740P16000	AB	DD	Screw(4×16)	ﾋﾞｽ			
12	MHNG-0044QSZZ	BK	HG	ADF hinge R	ADF ﾋﾝｼﾞ R			
15	GCAB-0264QSZZ	AZ	FX	Front case	前ｹｰｽ			
16	XHBS740P08000	AA	DD	Screw(4×8)	ﾋﾞｽ			
17	LHLDZ1640FCZZ	AC	DJ	Paper feed guide holder	給紙ｶﾞｲﾄﾞﾎﾙﾀﾞｰ			
18	MSPRT3390FHZZ	AQ	EQ	Link arm return spring	ﾘﾝｸｱｰﾑ復帰ｽﾌﾟﾘﾝｸﾞ			
19	MARMP0325FCZZ	AC	DJ	Upper guide link arm	上ｶﾞｲﾄﾞﾘﾝｸｱｰﾑ			
20	PSHEP1019QSZZ	AS	EZ	OC mat	OC ﾏｯﾄ			
21	PSPO-0044QSZZ	AN	EQ	Gap sponge	隙間ｽﾎﾟﾝｼﾞ			
22	QCNW-0242QSPZ	AW	FG	CIS gnd harness	CIS ｱｰｽﾊｰﾈｽ			
	(Unit)							
901	DUNT-1412QS13	CS	VQ	DSPF unit	DSPF ﾕﾆｯﾄ			
♣	DUNT-1412QS14	CS	VQ	DSPF unit	DSPF ﾕﾆｯﾄ			

Matrix

No.2	DSPF ｺﾝﾄﾛｰﾙ基板 (DSPF control PWB)	
PARTS CODE	Americas	Europe Japan
CPWBX0327QS54		1st Lot
CPWBX0327QS55	1st Lot	

No.901	DSPF ﾕﾆｯﾄ (DSPF unit)	
PARTS CODE	Americas	Europe Japan
DUNT-1412QS13		1st Lot
DUNT-1412QS14	1st Lot	

【C10】

DSPF 外装部 (DSPF Exteriors)[MX-C304W,MX-C306W]

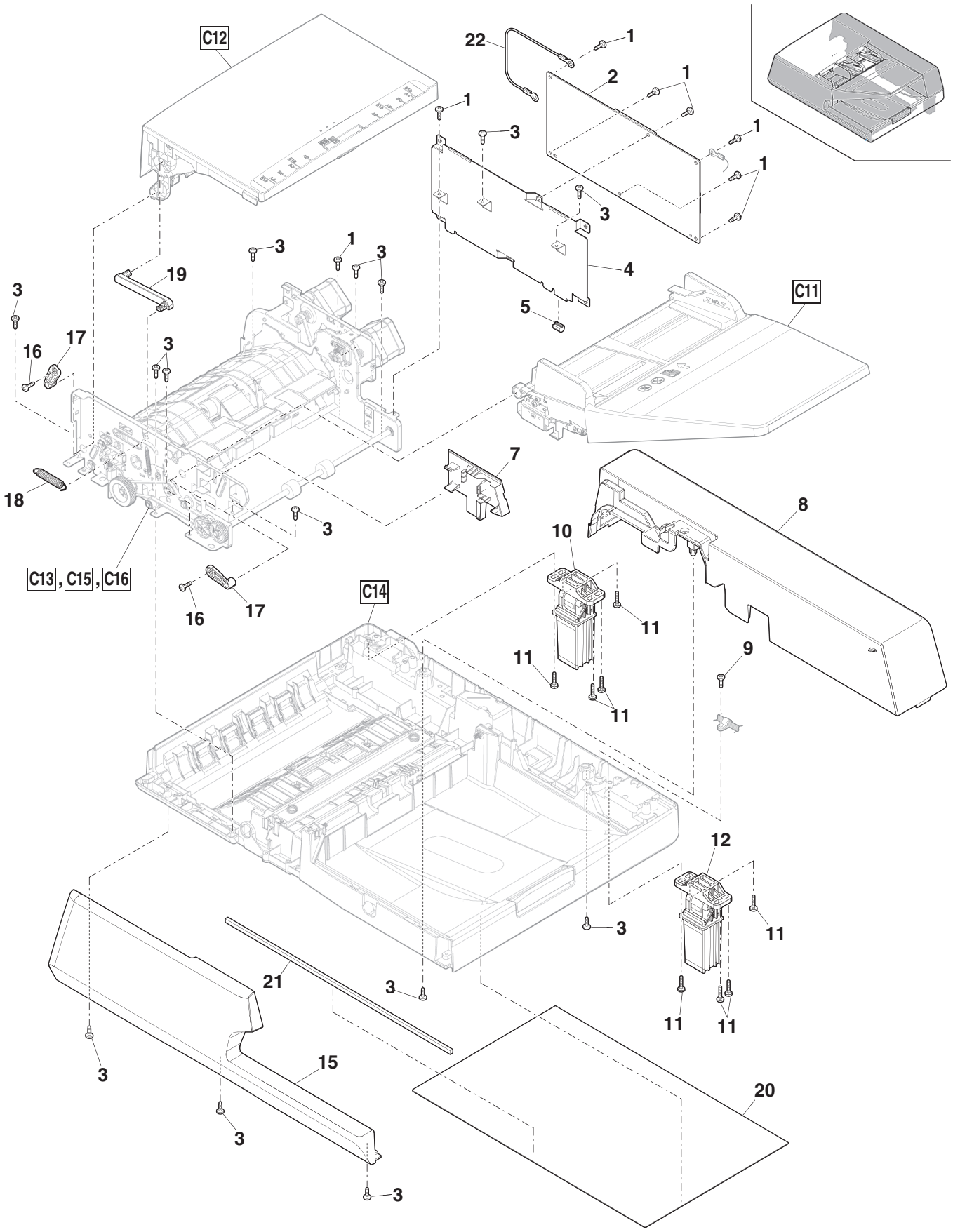

【C11】

DSPF 原稿ﾄﾚｲﾕﾆｯﾄ (DSPF Original tray unit)[MX-C304W,MX-C306W]

NO.	PARTS CODE	PRICE RANK Ex.	PRICE RANK Ja.	DESCRIPTION		Inter-change	Reason for change	Effective time
1	LSŌU-0088QSZZ	BD	GN	Original tray upper	原稿ﾄﾚｲ上			
2	XEPS730P08X00	AA	DD	Screw(3×8X)	ﾋﾞｽ			
3	NGERR2191FCZZ	AD	DJ	Original width rack	原稿幅ﾗｯｸ			
4	MARMP0106QSZZ	AX	FQ	Original fixing arm	原稿押えｱｰﾑ			
5	LSŌU-0089QSZZ	AY	FQ	Original tray lower	原稿ﾄﾚｲ下			
6	XEBS730P08000	AC	DD	Screw(3×8)	ﾋﾞｽ			
7	MSPRC3358FHZZ	AQ	EQ	2nd scan idler spring	2nd ｽｷｬﾝ従動ｽﾌﾟﾘﾝｸﾞ			
8	NRŌLP0011QSZZ	AD	DJ	Delivery follower roller	排紙従動ﾛｰﾗｰ			
9	PSPŌ-0031QSZZ	AC	DJ	Delivery sponge	蹴り出しｽﾎﾟﾝｼﾞ			
10	NSFTZ0253QSZZ	AT	EZ	Idler shaft	従動ｼｬﾌﾄ			
11	PCUSS0395FHZZ	AQ	EQ	SPF earth cushion	SPF ｱｰｽｸｯｼｮﾝ			
12	PBRSR0051QSZZ	AW	FG	Delivery discharge brush	排紙除電ﾌﾞﾗｼ			
13	PTPE-0332FHZZ	AQ	EQ	SPF earth tape	SPF ｱｰｽﾃｰﾌﾟ			
14	PSHEP1042QSZZ	AQ	EQ	CIS spacer	CIS ｽﾍﾟｰｻｰ			
15	PMLT-0315QSZ1	AN	EQ	CIS dustproof cushion	CIS 防塵ﾓﾙﾄ			
16	XHBS730P06000	AC	DD	Screw(3×6)	ﾋﾞｽ			
17	PGiDH0324QSZZ	AX	FQ	Paper guide	ﾍﾟｰﾊﾟｰｶﾞｲﾄﾞ			
18	LHLDZ0337QSZZ	AS	EZ	FFC protective holder	FFC 保護ﾎﾙﾀﾞｰ			
19	PBRSR0260FHZZ	AM	GD	Discharge brush	除電ﾌﾞﾗｼ			
20	PSHEP1024QSZZ	AQ	EQ	Glass inclination sheet	ｶﾞﾗｽ傾きｼｰﾄ			
21	PGLSP0020QSZZ	BB	GD	Glass paper guide	ｶﾞﾗｽﾍﾟｰﾊﾟｰｶﾞｲﾄﾞ			
22	PSHEP1025QSZZ	AQ	EQ	CIS reading before sheet	CIS 読取前ｼｰﾄ			
23	LX-BZ0114QSZZ	AK	EB	Step screw(3×6)	段ﾋﾞｽ			
24	DUNT-1366QSPZ	BZ	TR	CIS unit	CIS ﾕﾆｯﾄ			
25	LX-BZ0113QSZZ	AH	DX	Step screw(3×6)	段ﾋﾞｽ			
26	MSPRP0759QSZ1	AR	EQ	Sheet metal CIS spring	ｼｰﾄ板 CIS ｽﾌﾟﾘﾝｸﾞ			
27	PSHEP1023QSZZ	AQ	EQ	Spacer	ｽﾍﾟｰｻｰ			
28	PCŌVP0269QSZZ	AY	FQ	CIS EMI cover	CIS EMI ｶﾊﾞｰ			
29	NGERH0021QSZZ	AD	DJ	Manual paper feed gear	手差しｷﾞｱ			
30	XWHS730-05080	AA	DD	Washer(φ3-8)	ﾜｯｼｬｰ			
31	LPLTM1006QSZZ	AR	EQ	CIS skew adjustment plate	CIS 傾き調整板			
32	LPLTM1005QSZZ	AR	EQ	CIS mounting plate F	CIS 取付板 F			
33	LPLTP1014QSZZ	AX	FQ	Regulation plate F	規制板 F			
34	LPLTP1015QSZZ	AX	FQ	Regulation plate R	規制板 R			
35	LPLTM1004QSZZ	AR	EQ	CIS mounting plate R	CIS 取付板 R			
36	PSHEP1056QSZZ	AQ	EQ	FFC protect sheet	FFC 保護ｼｰﾄ			
	(Unit)							
901	DUNT-1415QSZZ	BZ	TR	Original tray unit	原稿ﾄﾚｲﾕﾆｯﾄ			

【C11】

DSPF 原稿ﾄﾚｲﾕﾆｯﾄ (DSPF Original tray unit)[MX-C304W,MX-C306W]

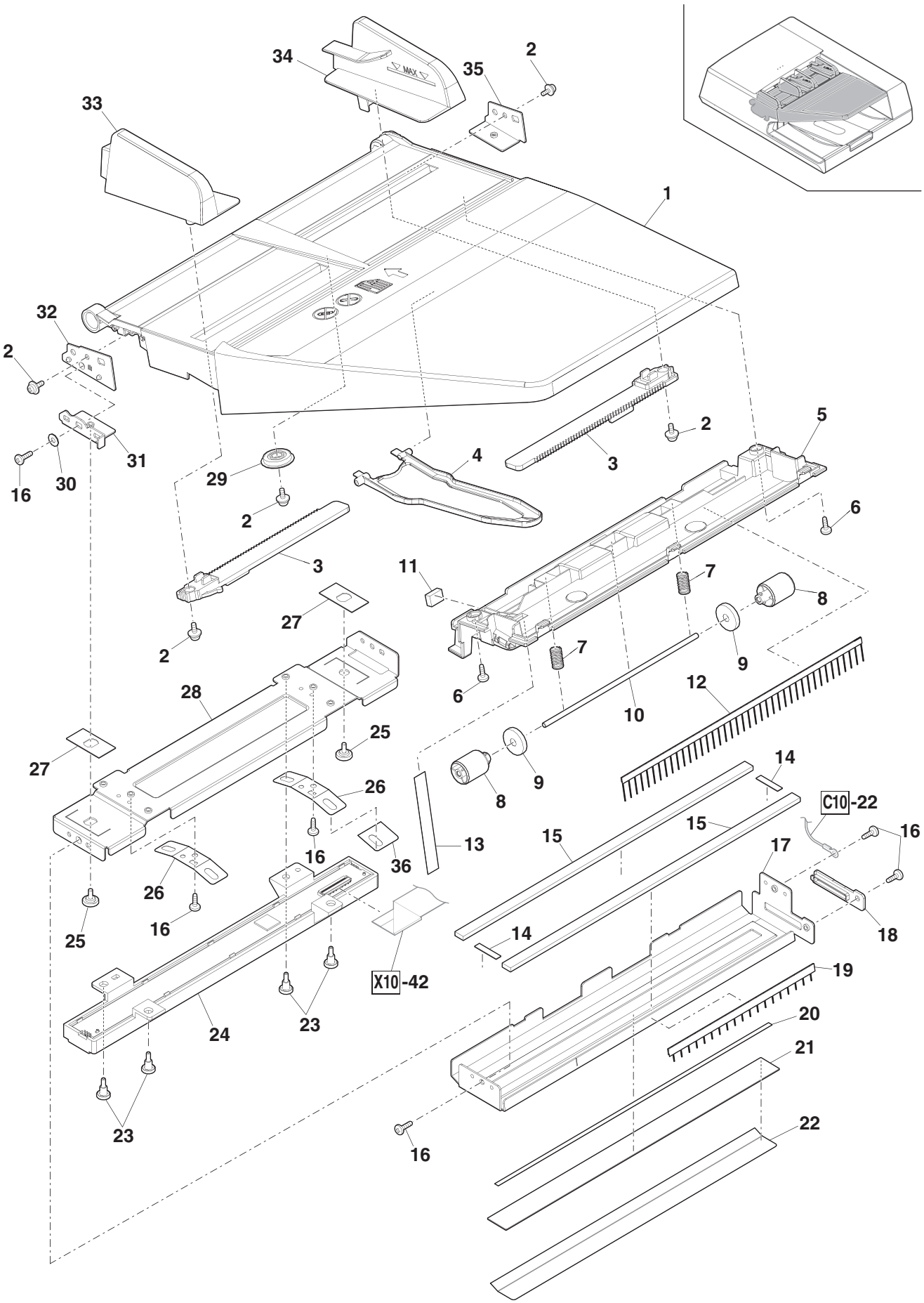

【C12】

DSPF 上ｶﾊﾞｰﾕﾆｯﾄ (DSPF Top cover unit)[MX-C304W,MX-C306W]

NO.	PARTS CODE	PRICE RANK Ex.	PRICE RANK Ja.	DESCRIPTION		Inter-change	Reason for change	Effective time
1	PCŌVP0268QSZZ	BE	GN	Upper door cover	上ﾄﾞｱｶﾊﾞｰ			
2	XEBS730P16000	AA	DD	Screw(3×16)	ﾋﾞｽ			
3	XWHS730-05080	AA	DD	Washer(φ3-8)	ﾜｯｼｬｰ			
4	LHLDZ1755FCZZ	AC	DJ	PS pressure holder	PS 圧接ﾎﾙﾀﾞｰ			
5	MSPRC4039FHZZ	AQ	EQ	PS pressure spring	PS 加圧ｽﾌﾟﾘﾝｸﾞ			
6	MLEVP1185FCZZ	AC	DJ	PS front actuator	PS 前ｱｸﾁｭｴｰﾀｰ			
7	MSPRD3378FHZZ	AQ	EQ	Actuator return spring	ｱｸﾁｭｴｰﾀｰ復帰ｽﾌﾟﾘﾝｸﾞ			
8	XEBS730P08000	AC	DD	Screw(3×8)	ﾋﾞｽ			
9	VHPSG2A241+-1	AG	DX	Photo sensor(SG2A241)	ﾌｫﾄｾﾝｻｰ			
10	NRŌLP1517FCZZ	AA	DJ	Transport follower roller	搬送従動ﾛｰﾗｰ			
11	NSFTZ0249QSZZ	AT	EZ	Transport follower shaft	搬送従動ﾛｰﾗｰ軸			
12	MSPRD4047FHZZ	AQ	EQ	Paper feed shaft earth spring	給紙軸ｱｰｽｽﾌﾟﾘﾝｸﾞ			
13	MLEVP0220QSZZ	AX	FQ	Paper enter detect actuator	入紙検知ｱｸﾁｭｴｰﾀｰ			
14	XPSSP20-10000	AA	DD	Spring pin(2×10)	ｽﾌﾟﾘﾝｸﾞﾋﾟﾝ			
15	NGERH2309FCZZ	AD	DJ	Pick up roller gear(18T)	ﾋﾟｯｸｱｯﾌﾟﾛｰﾗｰｷﾞｱ			
16	XRESP50-06000	AA	DD	E ring(E5)	E ﾘﾝｸﾞ			
17	NBRGM0968FCZZ	AC	DD	Bearing(φ6)	軸受			
18	XPSSJ20-08000	AA	DD	Spring pin(φ2-8)	ｽﾌﾟﾘﾝｸﾞﾋﾟﾝ			
19	MLEVP0953FCZZ	AC	DJ	PE actuator	PE ｱｸﾁｭｴｰﾀｰ			
20	MSPRD3582FHZZ	AQ	EQ	SPED actuactor spring	SPED ｱｸﾁｭｴｰﾀｰｽﾌﾟﾘﾝｸﾞ			
21	PGiDM0325QSZ1	BE	GN	Upper door PG	上ﾄﾞｱ PG			
22	PMLT-1652FHZZ	AM	EG	Pick up damper cushion	呼込消音ﾓﾙﾄ			
23	MLEVP0221QSZZ	AR	EQ	Top cover open actuator	ﾄｯﾌﾟｶﾊﾞｰ開閉ｱｸﾁｭｴｰﾀｰ			
24	NSFTZ0247QSZZ	AX	FQ	Separation shaft	分離軸			
25	XRESP40-06000	AA	DD	E ring(E4)	E ﾘﾝｸﾞ			
26	PCLC-0339FCZZ	BE	GN	Pickup torque limiter	呼込みﾄﾙｸﾘﾐｯﾀｰ			
27	LHLDZ0336QSZZ	AX	FQ	Pick holder	ﾋﾟｯｸﾎﾙﾀﾞｰ			
28	NSFTZ0248QSZZ	AW	FG	Pick shaft	ﾋﾟｯｸｼｬﾌﾄ			
29	NPLYZ0437FCZZ	AT	EZ	Paper feed pulley	給紙ﾌﾟｰﾘｰ			
30	NBLTH0442FHZ1	AW	FG	Pick belt	ﾋﾟｯｸﾍﾞﾙﾄ			
31	NPLYZ0088QSZZ	AY	FQ	Pulley(22T)	ﾌﾟｰﾘｰ			
32	NRŌLR0295QSZZ	AR	FX	Pick roller	ﾋﾟｯｸﾛｰﾗｰ			
33	NCPL-0081FCZZ	AH	DX	One way coupling	ﾜﾝｳｪｲｶｯﾌﾟﾘﾝｸﾞ			
34	NRŌLR1541FCAZ	AG	DX	Paper feed separate roller	給紙分離ﾛｰﾗｰ			
35	MARMP0105QSZZ	BB	GD	Pick arm	ﾋﾟｯｸｱｰﾑ			
36	PGiDM0326QSZZ	AX	FQ	Upper door cap	上ﾄﾞｱｷｬｯﾌﾟ			
37	PSHEP6047FHZZ	AM	EG	Deskew idle mylar	搬送ｱｲﾄﾞﾙﾏｲﾗｰ			
38	LX-BZ0040QSZZ	AC	DD	Step screw	段ﾋﾞｽ			
39	TLABH1133QSZZ	AU	EZ	Clean caution label	清掃注意ﾗﾍﾞﾙ			
40	PSHEP1067QSZZ	AW	FG	PS rear sheet	PS 後ｼｰﾄ			
	(Unit)							
901	DUNT-1414QSZZ	BT	NE	Top cover unit	上ｶﾊﾞｰﾕﾆｯﾄ			

【C12】

DSPF 上ｶﾊﾞｰﾕﾆｯﾄ (DSPF Top cover unit)[MX-C304W,MX-C306W]

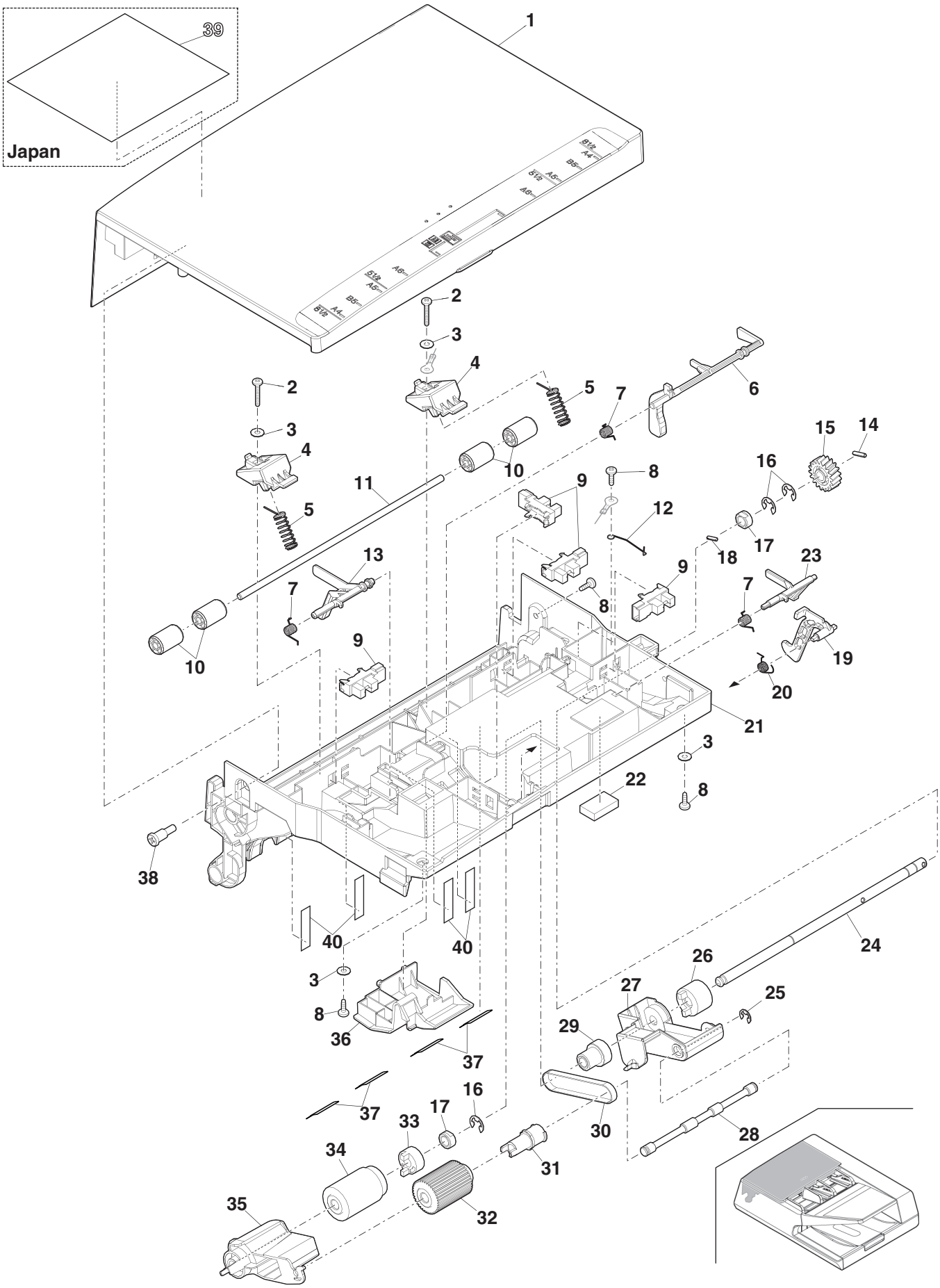

【C13】

DSPF 上搬送部 (DSPF Upper transport section)[MX-C304W,MX-C306W]

NO.	PARTS CODE	PRICE RANK Ex.	PRICE RANK Ja.	DESCRIPTION		Inter-change	Reason for change	Effective time
1	ＬＳＴＰＰ００１１ＱＳＺＺ	AC	DJ	Resin ring(E3)	樹脂ﾘﾝｸﾞ			
2	ＬＨＬＤＺ０３３８ＱＳＺＺ	AX	FQ	Separate holder	剥離ﾎﾙﾀﾞｰ			
3	ＮＳＦＴＺ３９０４ＦＨＺＺ	AR	EQ	Separation shaft	分離軸			
4	ＸＰＳＳＪ２０－０８０００	AA	DD	Spring pin(φ2-8)	ｽﾌﾟﾘﾝｸﾞﾋﾟﾝ			
5	ＸＲＥＳＰ４０－０６０００	AA	DD	E ring(E4)	Ｅﾘﾝｸﾞ			
6	ＮＲＯＬＲ０１６６ＱＳＡＺ	AX	ZZ	Paper feed separate roller	給紙分離ﾛｰﾗｰ			
7	ＰＣＬＣ－０３３８ＦＣＺＺ	BE	GN	Torque limiter	ﾄﾙｸﾘﾐｯﾀｰ			
8	ＭＳＰＲＣ４５６７ＦＨＺ１	AQ	EQ	Separation spring	剥離ｽﾌﾟﾘﾝｸﾞ			
9	ＰＳＨＥＺ５４６２ＦＣＺ１	AD	DJ	Front separate sheet	前捌きｼｰﾄ			
10	ＰＳＨＥＰ６０４７ＦＨＺＺ	AM	EG	Deskew idle mylar	搬送ｱｲﾄﾞﾙﾏｲﾗｰ			
11	ＰＭＬＴ－１９７５ＦＨＺＺ	AM	EG	Actuator damper cushion	ｱｸﾁｭｴｰﾀｰ消音ﾓﾙﾄ			
12	ＸＨＢＳ７３０Ｐ０６０００	AC	DD	Screw(3×6)	ﾋﾞｽ			
13	ＰＳＨＥＺ６０６６ＦＣＺＺ	AC	DJ	Rotation plate sheet	回転板ｼｰﾄ			
14	ＰＧｉＤＭ０３２７ＱＳＺＺ	AZ	FX	Separate paper guide	分離ﾍﾟｰﾊﾟｰｶﾞｲﾄﾞ			
15	ＭＳＰＲＤ３３７８ＦＨＺＺ	AQ	EQ	Actuator return spring	ｱｸﾁｭｴｰﾀｰ復帰ｽﾌﾟﾘﾝｸﾞ			
16	ＬＳＴＰＰ００３０ＱＳＺＺ	BB	GD	Original stopper	原稿ｽﾄｯﾊﾟｰ			
17	ＭＬＥＶＰ０２２２ＱＳＺＺ	AX	FQ	Reading front actuator	読み取り前ｱｸﾁｪｰﾀ			
18	ＭＳＰＲＤ４０４５ＦＨＺＺ	AQ	EQ	Reading front actuator spring	読取前ｱｸﾁｭｴｰﾀｰｽﾌﾟﾘﾝｸﾞ			
19	ＭＬＥＶＰ０２２３ＱＳＺＺ	AY	FQ	SPPD4 sensor flag	SPPD4 ｾﾝｻｰｱｰﾑ			
20	ＰＧｉＤＭ０３２８ＱＳＺＺ	AY	FQ	Transport paper guide	搬送ﾍﾟｰﾍﾟｰｶﾞｲﾄﾞ			
21	ＰＳＨＥＰ１０４８ＱＳＺＺ	AN	EQ	2nd read gide mylar	2nd 読取ｶﾞｲﾄﾞﾏｲﾗｰ			
22	ＭＳＰＲＣ３３５３ＦＨＺＺ	AQ	EQ	Reading plate spring	読取板ｽﾌﾟﾘﾝｸﾞ			

【C13】

DSPF 上搬送部 (DSPF Upper transport section)[MX-C304W,MX-C306W]

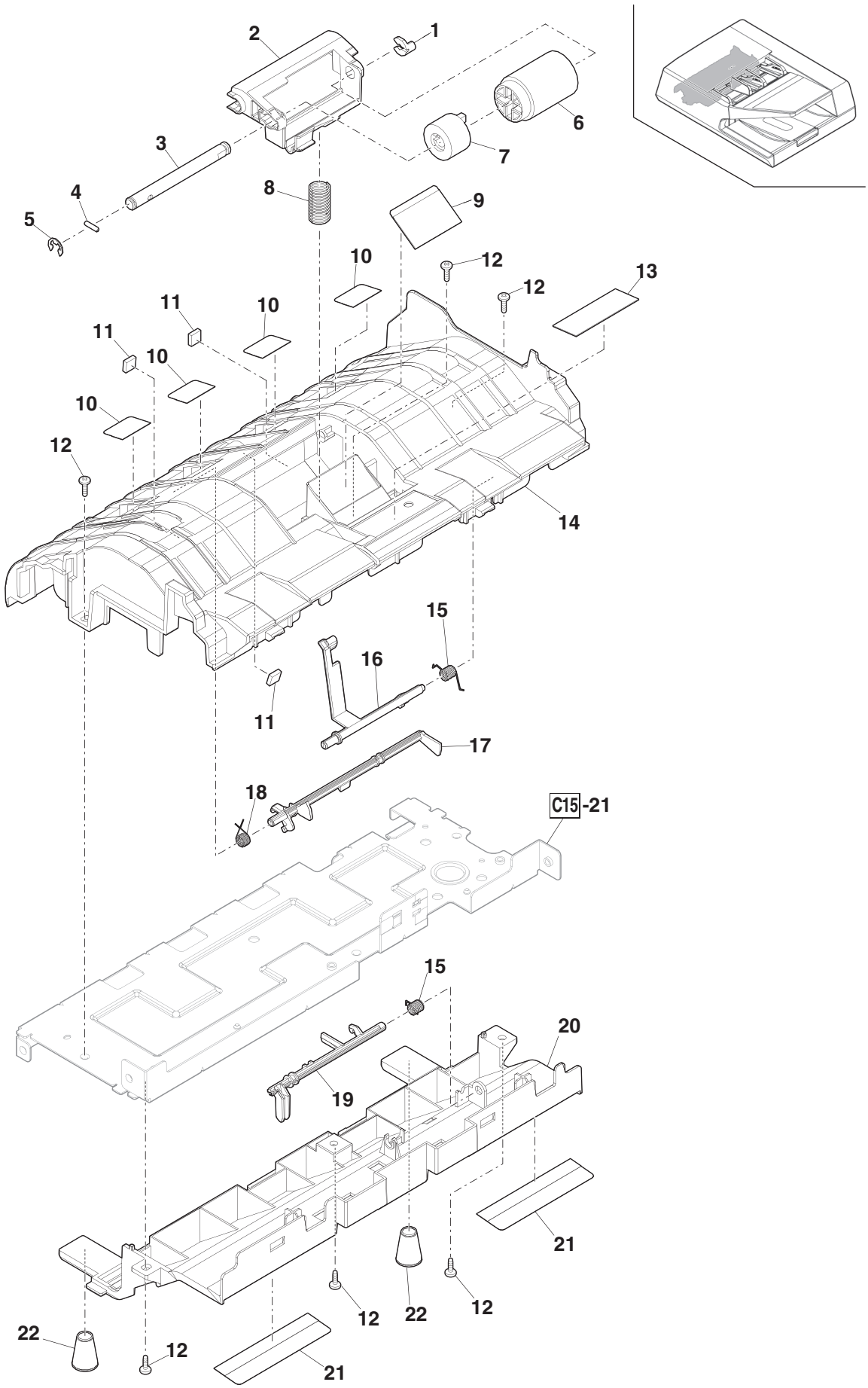

【C14】

DSPF ﾍﾞｰｽﾄﾚｲﾕﾆｯﾄ (DSPF Base tray unit)[MX-C304W,MX-C306W]

NO.	PARTS CODE	PRICE RANK Ex.	PRICE RANK Ja.	DESCRIPTION		Inter-change	Reason for change	Effective time
1	ＰＳＨＥＰ１０２９ＱＳＺＺ	AQ	EQ	Calibration strip	ｷｬﾘﾌﾞﾚｰｼｮﾝｼｰﾄ			
2	ＰＧｉＤＭ０３２９ＱＳＺＺ	AX	FQ	Duplex presssure bar bracket	両面加圧板ﾌﾞﾗｹｯﾄ			
3	ＭＳＰＲＣ０７３９ＱＳＺＺ	AQ	EQ	Duplex base Presure spring	ﾃﾞｭｰﾌﾟﾚｯｸｽ台板加圧ｽﾌﾟﾘﾝｸﾞ			
4	ＰＳＨＥＰ１０４０ＱＳＺＺ	AN	EQ	1st scan 2 mylar	1st ｽｷｬﾝ 2 ﾏｲﾗｰ			
5	ＰＣＯＶＰ０２７２ＱＳＺＺ	AX	FQ	LID cover	LID ｶﾊﾞｰ			
6	ＰＳＨＥＰ６０４７ＦＨＺＺ	AM	EG	Deskew idle mylar	搬送ｱｲﾄﾞﾙﾏｲﾗｰ			
7	ＶＨＰＳＧ２Ａ２４１＋－１	AG	DX	Photo sensor(SG2A241)	ﾌｫﾄｾﾝｻｰ			
8	ＬＤＡｉＺ００７９ＱＳＺＺ	BS	MW	Base tray	ﾍﾞｰｽﾄﾚｲ			
9	ＬＳＯＵ－００９０ＱＳＺＺ	AY	FQ	Delivery extension tray	排紙延長ﾄﾚｲ			
10	ＬＨＬＤＺ０３４１ＱＳＺＺ	AX	FQ	Extend tray holder	延長ﾄﾚｲﾎﾙﾀﾞｰ			
11	ＸＥＢＳ７３０Ｐ０８０００	AC	DD	Screw(3×8)	ﾋﾞｽ			
12	ＣＣＬＥＺ０２１３ＦＣ５１	AX	FQ	CIS glass cleaner unit	CIS ｶﾞﾗｽｸﾘｰﾅｰﾕﾆｯﾄ			
13	ＭＳＰＲＣ３３５６ＦＨＺＺ	AQ	EQ	Stopper spring	ｽﾄｯﾊﾟｰｽﾌﾟﾘﾝｸﾞ			
14	ＰＴＭＥ－００３０ＱＳＺ１	AC	DJ	Open/Close lock pawl	開閉ﾛｯｸ爪			
15	ＭＬＥＶＰ０２２４ＱＳＺＺ	AY	FQ	SPOD sensor flag	SPOD ｾﾝｻｰｱｰﾑ			
16	ＭＳＰＲＤ３３７８ＦＨＺＺ	AQ	EQ	Actuator return spring	ｱｸﾁｭｴｰﾀｰ復帰ｽﾌﾟﾘﾝｸﾞ			
17	ＮＲＯＬＰ０２８５ＱＳＺＺ	AR	EQ	Idler roller	従動ﾛｰﾗｰ			
18	ＮＳＦＴＺ０２５３ＱＳＺＺ	AT	EZ	Idler shaft	従動ｼｬﾌﾄ			
19	ＭＳＰＲＣ３３５８ＦＨＺＺ	AQ	EQ	2nd scan idler spring	2nd ｽｷｬﾝ従動ｽﾌﾟﾘﾝｸﾞ			
20	ＭＳＰＲＰ０７４２ＱＳＺＺ	AR	EQ	Follower roller fixing plate	従動ﾛｰﾗｰ押え板			
21	ＸＨＢＳ７３０Ｐ０６０００	AC	DD	Screw(3×6)	ﾋﾞｽ			
22	ＰＧＳＫ－００７７ＦＣＺＺ	AE	DS	Gasket FL	ｶﾞｽｹｯﾄ FL			
23	ＰＣＯＶＰ０２７１ＱＳＺＺ	AX	FQ	Scan bracket cover	ｽｷｬﾝﾌﾞﾗｹｯﾄｶﾊﾞｰ			
24	ＰＳＨＥＰ１０２８ＱＳＺＺ	AN	EQ	1st scan mylar	1st ｽｷｬﾝﾏｲﾗｰ			
25	ＮＳＦＴＰ３４２８ＦＣＺＺ	AC	DJ	Read front follower shaft	読取前従動軸			
26	ＮＲＯＬＰ１５１７ＦＣＺＺ	AA	DJ	Transport follower roller	搬送従動ﾛｰﾗｰ			
27	ＭＳＰＲＣ３４１３ＦＨＺＺ	AQ	EQ	1st scan idler spring	1st ｽｷｬﾝ従動ｽﾌﾟﾘﾝｸﾞ			
28	ＬＨＬＤＺ０３４０ＱＳＺＺ	AS	EZ	Idler base	ｱｲﾄﾞﾗｰﾍﾞｰｽ			
29	ＰＳＨＥＰ１０２７ＱＳＺＺ	AM	EG	1st LID mylar	1st ILD ﾏｲﾗｰ			
30	ＰＳＰＯ－００４２ＱＳＺＺ	AN	EQ	OC mat fixing sponge	OC ﾏｯﾄ取付ｽﾎﾟﾝｼﾞ			
31	ＰＳＨＥＺ１０３１ＱＳＺＺ	AQ	EQ	OC mat fixing fastener	OC ﾏｯﾄ取付面ﾌｧｽﾅｰ			
	(Unit)							
901	ＤＵＮＴ－１４１８ＱＳＺＺ	BT	NE	Base tray unit	ﾍﾞｰｽﾄﾚｲﾕﾆｯﾄ			

【C14】

DSPF ﾍﾞｰｽﾄﾚｲﾕﾆｯﾄ (DSPF Base tray unit)[MX-C304W,MX-C306W]

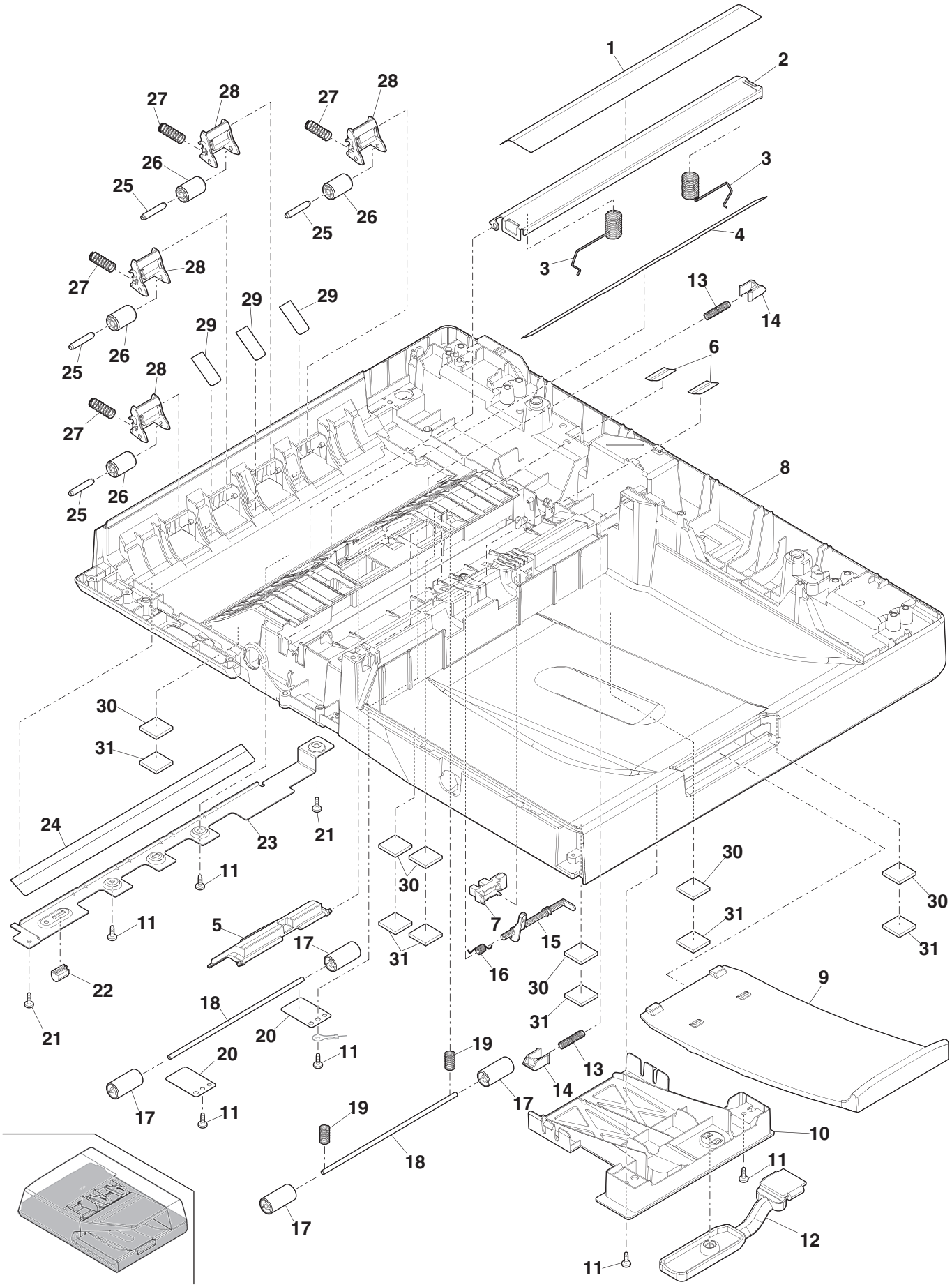

【C15】

DSPF 駆動部 1 (DSPF Drive section 1)[MX-C304W,MX-C306W]

NO.	PARTS CODE	PRICE RANK Ex.	PRICE RANK Ja.	DESCRIPTION		Inter-change	Reason for change	Effective time
1	XRESP50-06000	AA	DD	E ring(E5)	Eﾘﾝｸﾞ			
2	XWHS760-08115	AA	DD	Washer(φ6-11)	ﾜｯｼｬｰ			
3	MSPRC4040FHZZ	AQ	EQ	Brake spring	ﾌﾞﾚｰｷｽﾌﾟﾘﾝｸﾞ			
4	LX-WZ0448FHZZ	AQ	EQ	Poly slider(6-12)	ﾎﾟﾘｽﾗｲﾀﾞｰ			
5	NBRGM0051QSZZ	AB	DJ	Bearing(φ6 PIB21)	軸受			
6	CFRM-0188QS01	AY	FQ	Rear bracket	後ﾌﾞﾗｹｯﾄ			
7	NGERH0433QSZZ	AD	DD	Gear(32T)	ｷﾞｱ			
8	XPSSP20-10000	AA	DD	Spring pin(2×10)	ｽﾌﾟﾘﾝｸﾞﾋﾟﾝ			
9	XRESP40-06000	AA	DD	E ring(E4)	Eﾘﾝｸﾞ			
10	NGERH0022QSZZ	AC	DJ	Gear(33T)	ｷﾞｱ			
11	XHBS730P06000	AC	DD	Screw(3×6)	ﾋﾞｽ			
12	NBRGC0017QSZZ	AC	DJ	Bearing(B-F6-10)	軸受			
13	MSPRP0740QSZZ	AR	EQ	Ground plate	ｱｰｽ板			
14	LHLDZ2078FCZZ	AC	DJ	Stopper holder	ｽﾄｯﾊﾟｰﾎﾙﾀﾞｰ			
15	MSPRC3356FHZZ	AQ	EQ	Stopper spring	ｽﾄｯﾊﾟｰｽﾌﾟﾘﾝｸﾞ			
16	PTME-0030QSZ1	AC	DJ	Open/Close lock pawl	開閉ﾛｯｸ爪			
17	NRŌLR0286QSZZ	AY	FQ	Feed roller	搬送ﾛｰﾗｰ			
18	NRŌLR0287QSZZ	BK	HG	Feed roller 1	搬送ﾛｰﾗｰ 1			
19	VHPSG2A241+-1	AG	DX	Photo sensor(SG2A241)	ﾌｫﾄｾﾝｻｰ			
20	MSPRP0741QSZZ	AR	EQ	Core ground plate	ｺｱｱｰｽ板			
21	LSTYM0029QSZZ	AY	FQ	Core bracket	ｺｱﾌﾞﾗｹｯﾄ			
22	PSHEP6047FHZZ	AM	EG	Deskew idle mylar	搬送ｱｲﾄﾞﾙﾏｲﾗｰ			
23	LPLTM1009QSZZ	AX	FQ	Reading plate	読取板			
24	PSHEP1026QSZZ	AR	EQ	White sheet	白ｼｰﾄ			
25	NRŌLR0288QSZZ	BB	GD	Feed roller 2	搬送ﾛｰﾗｰ 2			
26	NRŌLR0289QSZZ	BB	GD	Feed roller 3	搬送ﾛｰﾗｰ 3			
27	NRŌLR0290QSZZ	BB	GD	Feed roller 4	搬送ﾛｰﾗｰ 4			
28	CFRM-0187QS01	AZ	FX	Front bracket	前ﾌﾞﾗｹｯﾄ			
29	NGERH0537QSZZ	AQ	EQ	Gear(32T)	ｷﾞｱ			
30	NPLYZ0074QSZZ	AR	EQ	Pulley(43P37T)	ﾌﾟｰﾘｰ			
31	NBLTH0070QSZZ	AX	FQ	Belt(S2M-308)	ﾍﾞﾙﾄ			
32	PCLR-0520FCZZ	AB	DJ	Tension collar	ﾃﾝｼｮﾝｺﾛ			
33	NPLYZ0453FCZZ	AC	DJ	Drive pulley(24P)	駆動ﾌﾟｰﾘｰ			
34	LHLDZ0339QSZZ	AS	EZ	Arm holder	ｱｰﾑﾎﾙﾀﾞｰ			
35	MLEVP0095QSZZ	AD	DJ	Book sensor actuator	ﾌﾞｯｸｾﾝｻｰｱｸﾁｭｴｰﾀｰ			
36	MSPRC0153SSZZ	AQ	EQ	SOCD sensor spring	SOCD ｾﾝｻｰｽﾌﾟﾘﾝｸﾞ			
37	NPLYZ0072QSZZ	AR	EQ	JAM release knob	JAM 解除ﾉﾌﾞ			
38	XHBS740P08000	AA	DD	Screw(4×8)	ﾋﾞｽ			
39	LPLTP0131QSZ1	AD	DJ	Book sensor fixing plate	ﾌﾞｯｸｾﾝｻｰ取付板			
40	CPLTM1011QS01	AX	FQ	Belt bracket 3	ﾍﾞﾙﾄﾌﾞﾗｹｯﾄ 3			
41	XWHS730-05080	AA	DD	Washer(φ3-8)	ﾜｯｼｬｰ			
42	MSPRT0745QSZZ	AQ	EQ	Belt 3 spring	ﾍﾞﾙﾄ 3 ｽﾌﾟﾘﾝｸﾞ			
43	XHBS730P10000	AD	DD	Screw(3×10)	ﾋﾞｽ			

【C15】

DSPF 駆動部 1 (DSPF Drive section 1)[MX-C304W,MX-C306W]

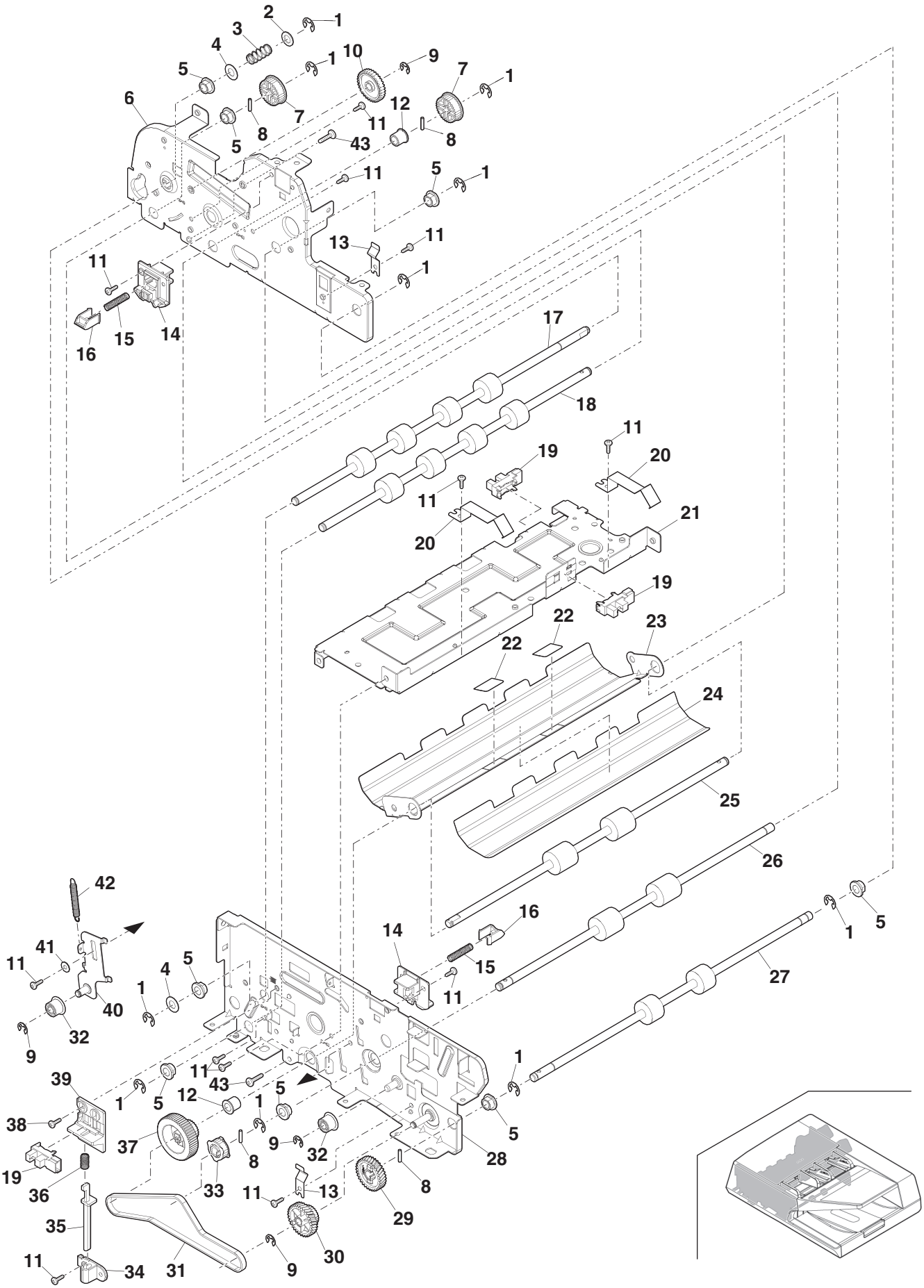

【C16】

DSPF 駆動部 2 (DSPF Drive section 2)[MX-C304W,MX-C306W]

NO.	PARTS CODE	PRICE RANK Ex.	PRICE RANK Ja.	DESCRIPTION		Inter-change	Reason for change	Effective time
1	XHBS730P06000	AC	DD	Screw(3×6)	ﾋﾞｽ			
2	RMŌTS0109QSPZ	BF	GN	Motor	ﾓｰﾀｰ			
3	LPLTM1008QSZZ	AW	FG	Belt bracket 1	ﾍﾞﾙﾄﾌﾞﾗｹｯﾄ 1			
4	XWHS730−05080	AA	DD	Washer(φ3-8)	ﾜｯｼｬｰ			
5	MSPRT0743QSZZ	AQ	EQ	Belt 2 spring	ﾍﾞﾙﾄ 2 ｽﾌﾟﾘﾝｸﾞ			
6	CPLTM1007QS01	AY	FQ	Motor bracket	ﾓｰﾀｰﾌﾞﾗｹｯﾄ			
7	NBLTH0067QSZZ	AR	EQ	Belt(S2M-140)	ﾍﾞﾙﾄ			
8	NPLYZ0071QSZZ	AQ	EQ	Pulley(43P18T)	ﾌﾟｰﾘｰ			
9	XRESP50−06000	AA	DD	E ring(E5)	E ﾘﾝｸﾞ			
10	NBRGM0051QSZZ	AB	DJ	Bearing(φ6 PIB21)	軸受			
11	NSFTZ0251QSZZ	AR	EQ	Drive shaft	駆動軸			
12	NBLTH0069QSZZ	AX	FQ	Belt(S2M-166)	ﾍﾞﾙﾄ			
13	XPSSP20−10000	AA	DD	Spring pin(2×10)	ｽﾌﾟﾘﾝｸﾞﾋﾟﾝ			
14	NPLYZ0073QSZZ	AQ	EQ	Pulley(43P37T)	ﾌﾟｰﾘｰ			
15	CPLTM1010QS01	AX	FQ	Belt bracket 2	ﾍﾞﾙﾄﾌﾞﾗｹｯﾄ 2			
16	XRESP40−06000	AA	DD	E ring(E4)	E ﾘﾝｸﾞ			
17	PRNGP0006QSZZ	AQ	EQ	Flange	ﾌﾗﾝｼﾞ			
18	PCLR−0520FCZZ	AB	DJ	Tension collar	ﾃﾝｼｮﾝｺﾛ			
19	PCLC−0402FCZZ	AT	EZ	Clutch(3.5Kg)	ｸﾗｯﾁ			
20	NGERH2400FCZZ	AD	DJ	PS joint gear(32T)	PS 連結ｷﾞｱ			
21	MSPRT0744QSZZ	AQ	EQ	Belt 1 spring	ﾍﾞﾙﾄ 1 ｽﾌﾟﾘﾝｸﾞ			
22	NPLYZ0525FCZZ	AH	DX	Pulley(37P)(1WAY)	ﾌﾟｰﾘｰ			
23	NBLTH0068QSZZ	AX	FQ	Belt(S2M-224)	ﾍﾞﾙﾄ			

【C16】

DSPF 駆動部 2 (DSPF Drive section 2)[MX-C304W,MX-C306W]

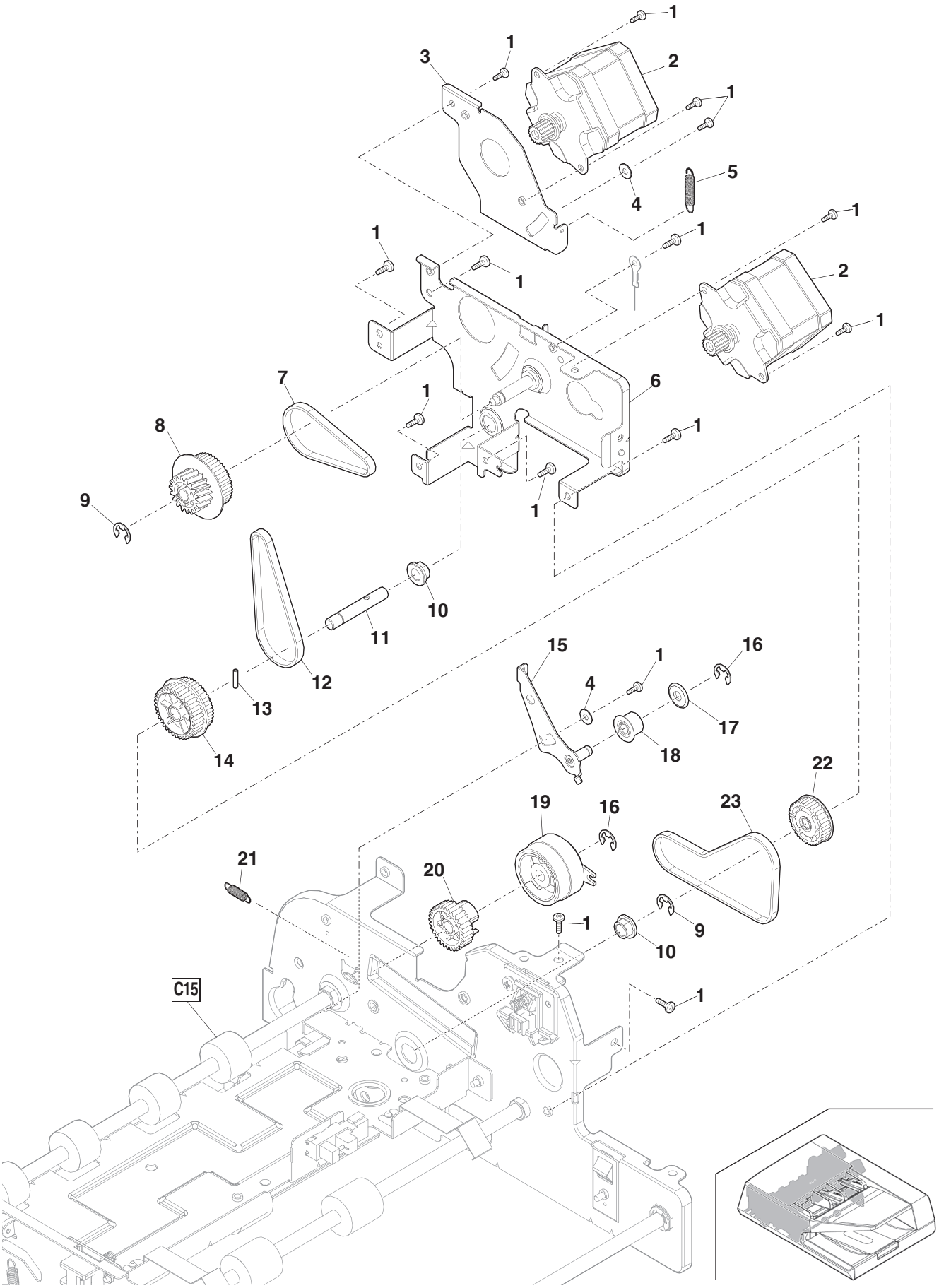

【C30】

RSPF 外装部 (RSPF Exteriors)[MX-C303W,MX-C305W]

NO.	PARTS CODE	PRICE RANK Ex.	PRICE RANK Ja.	DESCRIPTION		Inter-change	Reason for change	Effective time
1	GCAB-0261QSZZ	BD	GN	ADF cover	ADF ｶﾊﾞｰ			
2	NBRGM0051QSZZ	AB	DJ	Bearing(φ6 PIB21)	軸受			
3	NGERH0521QSZZ	AQ	EQ	Gear(15T)	ｷﾞｱ			
4	PRNGP0081FCZ1	AB	DJ	Resin ring(E4)	樹脂ﾘﾝｸﾞ			
5	PSPŌ-0037QSZZ	AQ	EQ	Pick up sponge	ﾋﾟｯｸｱｯﾌﾟｽﾎﾟﾝｼﾞ			
6	PGｉDM0315QSZZ	AX	FQ	adjust tray R	調整ﾄﾚｲ R			
7	PGｉDM0314QSZZ	AX	FQ	adjust tray L	調整ﾄﾚｲ L			
8	LSŌU-0085QSZZ	BD	GN	Original tray	原稿ﾄﾚｲ			
10	NGERR0538QSZZ	AV	FG	Rack width adjuster gear	ﾗｯｸ幅調整ｷﾞｱ			
11	XEPS730P08X00	AA	DD	Screw(3×8X)	ﾋﾞｽ			
12	NGERH0021QSZZ	AD	DJ	Manual paper feed gear	手差しｷﾞｱ			
13	PBRSR0050QSZZ	AX	FQ	Discharge brush	除電ﾌﾞﾗｼ			
14	GCAB-0262QSZZ	BE	GN	Rear cover	後ｶﾊﾞｰ			
15	XEBS730P08000	AC	DD	Screw(3×8)	ﾋﾞｽ			
16	GCAB-0263QSZZ	AZ	FX	Front cover	前ｶﾊﾞｰ			
17	NSFTB0237QSZZ	AR	EQ	Pick up roller shaft	呼込ﾛｰﾗｰ軸			
18	CRŌLR0280QS01	AT	FQ	Pick up roller	ﾋﾟｯｸｱｯﾌﾟﾛｰﾗｰ			
19	NGERH0520QSZZ	AQ	EQ	Gear(16T)	ｷﾞｱ			
20	LX-RZ0005QSZZ	AQ	EQ	Ring(D3)	止め輪			
21	NGERH0519QSZZ	AQ	EQ	Gear(23T)	ｷﾞｱ			
22	LHLDZ0321QSZZ	AX	FQ	Pick up plate	呼び込みﾌﾟﾚｰﾄ			
23	PCLC-0047QSZZ	AV	FG	One way clutch	ﾜﾝｳｪｲｸﾗｯﾁ			
24	NCPL-0039QSZZ	AQ	EQ	One way coupling	ﾜﾝｳｪｲｶｯﾌﾟﾘﾝｸﾞ			
25	CRŌLR0279QS01	AT	FQ	Separation roller	分離ﾛｰﾗｰ			
26	NSFTB0236QSZZ	AX	FQ	Roller separation shaft	ﾛｰﾗｰ分離ｼｬﾌﾄ			
27	XPSSP20-10000	AA	DD	Spring pin(2×10)	ｽﾌﾟﾘﾝｸﾞﾋﾟﾝ			
28	PCLC-0049QSZZ	AR	EQ	Pick up torque limiter	ﾋﾟｯｸｱｯﾌﾟﾄﾙｸﾘﾐｯﾀｰ			
29	NRŌLP0275QSZZ	AR	EQ	PF2 L roller	PF2 L ﾛｰﾗｰ			
30	NSFTB0238QSZZ	AT	EZ	PF1 roller shaft	PF1 ﾛｰﾗｰｼｬﾌﾄ			
31	MSPRC0710QSZZ	AQ	EQ	PF1 spring	PF1 ｽﾌﾟﾘﾝｸﾞ			
32	LHLDR0320QSZZ	AX	FQ	PF1 Roll frame	PF1 回転ﾌﾚｰﾑ			
501	CSŌU-0085QS51	BD	GN	Document tray unit	原稿ﾄﾚｲﾕﾆｯﾄ			
	(Unit)							
901	DUNT-1392QS11	CD	UD	RSPF unit	RSPF ﾕﾆｯﾄ			

【C30】

RSPF 外装部 (RSPF Exteriors)[MX-C303W,MX-C305W]

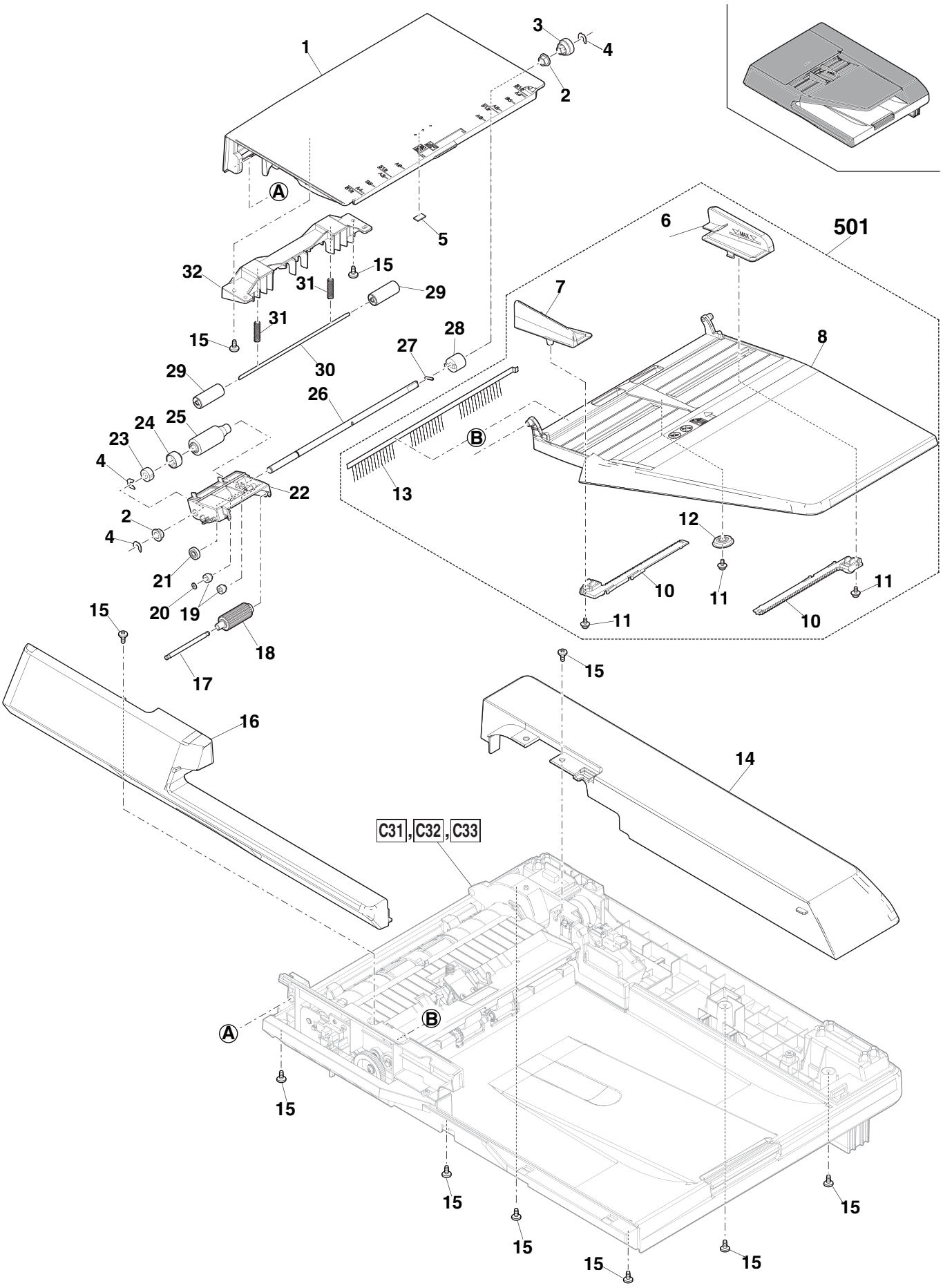

【C31】

RSPF 前ﾌﾚｰﾑ･上搬送部 (RSPF Front frame・Upper transport section)[MX-C303W, MX-C305W]

NO.	PARTS CODE	PRICE RANK Ex.	PRICE RANK Ja.	DESCRIPTION		Inter-change	Reason for change	Effective time
1	ＣＨＬＤＺ０３２４ＱＳ５１	AT	EZ	Pad unit	ﾊﾟｯﾄﾞﾕﾆｯﾄ			
2	ＭＳＰＲＣ０７１４ＱＳＺＺ	AF	EZ	Pad spring	ﾊﾟｯﾄﾞｽﾌﾟﾘﾝｸﾞ			
3	ＰＳＨＥＰ１０１５ＱＳＺＺ	AK	EZ	Pick up cork	ﾋﾟｯｸｱｯﾌﾟｺﾙｸ			
4	ＰＧｉＤＭ０３１３ＱＳＺＺ	AY	FQ	frame cover guide front	ﾌﾚｰﾑｶﾊﾞｰｶﾞｲﾄﾞ前			
5	ＶＨＰＳＧ２Ａ２４１＋－１	AG	DX	Photo sensor(SG2A241)	ﾌｫﾄｾﾝｻｰ			
6	ＭＬＥＶＰ０２１５ＱＳＺＺ	AQ	EQ	Document sensor arm	原稿ｾﾝｻｰｱｰﾑ			
7	ＬＳＴＰＰ００２９ＱＳＺＺ	AQ	EQ	Stopper	ｽﾄｯﾊﾟｰ			
8	ＭＳＰＲＤ０７１８ＱＳＺＺ	AQ	EQ	Stopper spring	ｽﾄｯﾊﾟｰｽﾌﾟﾘﾝｸﾞ			
9	ＰＣＯＶＰ０２６４ＱＳＺＺ	AX	FQ	Front frame cover	前ﾌﾚｰﾑｶﾊﾞｰ			
10	ＸＥＢＳ７３０Ｐ０８０００	AC	DD	Screw(3×8)	ﾋﾞｽ			
11	ＰＳＨＥＰ１０１６ＱＳＺＺ	AQ	EQ	Duplex L sheet	ﾃﾞｭｰﾌﾟﾚｯｸｽ L ｼｰﾄ			
12	ＮＲＯＬＲ０２８１ＱＳＺＺ	BK	HG	PF1 roller	PF1 ﾛｰﾗｰ			
13	ＮＲＯＬＲ０２８２ＱＳＺＺ	BK	HG	PF2 roller	PF2 ﾛｰﾗｰ			
14	ＮＲＯＬＲ０２８３ＱＳＺＺ	BK	HG	EJ1 roller	EJ1 ﾛｰﾗｰ			
15	ＮＲＯＬＲ０２８４ＱＳＺＺ	BK	HG	EJ2 roller	EJ2 ﾛｰﾗｰ			
16	ＭＳＰＲＤ０７１６ＱＳＺＺ	AQ	EQ	DP sensor spring	DP ｾﾝｻｰｽﾌﾟﾘﾝｸﾞ			
17	ＭＬＥＶＰ０２１１ＱＳＺＺ	AQ	EQ	DP sensor arm	DP ｾﾝｻｰｱｰﾑ			
18	ＮＧＥＲＨ０５２３ＱＳＺＺ	AQ	EQ	Gear(30T)	ｷﾞｱ			
19	ＪＫＮＢＺ００１４ＱＳＺＺ	AQ	EQ	Knob(H26T)	ﾉﾌﾞ			
20	ＸＥＰＳ７３０Ｐ０８Ｘ００	AA	DD	Screw(3×8X)	ﾋﾞｽ			
21	ＭＬＥＶＰ０２１３ＱＳＺＺ	AQ	EQ	ADF sensor arm	ADF ｾﾝｻｰｱｰﾑ			
22	ＮＢＲＧＭ００５１ＱＳＺＺ	AB	DJ	Bearing(φ6 PIB21)	軸受			
23	ＮＧＥＲＨ０５２５ＱＳＺＺ	AQ	EQ	Gear(40T)	ｷﾞｱ			
24	ＸＲＥＳＰ５０－０６０００	AA	DD	E ring(E5)	E ﾘﾝｸﾞ			
25	ＱＥＡＲＰ００３９ＱＳＺＺ	AX	FQ	Roller grounding plate	ﾛｰﾗｰｱｰｽ板			
27	ＬＨＬＤＺ０３２２ＱＳＺＺ	AW	FG	ADF sensor holder	ADF ｾﾝｻｰﾎﾙﾀﾞｰ			
28	ＰＧｉＤＭ０３１１ＱＳＺ１	AZ	FX	frame cover guide upper	ﾌﾚｰﾑｶﾊﾞｰｶﾞｲﾄﾞ上			

【C31】

RSPF 前ﾌﾚｰﾑ･上搬送部 (RSPF Front frame・Upper transport section)[MX-C303W, MX-C305W]

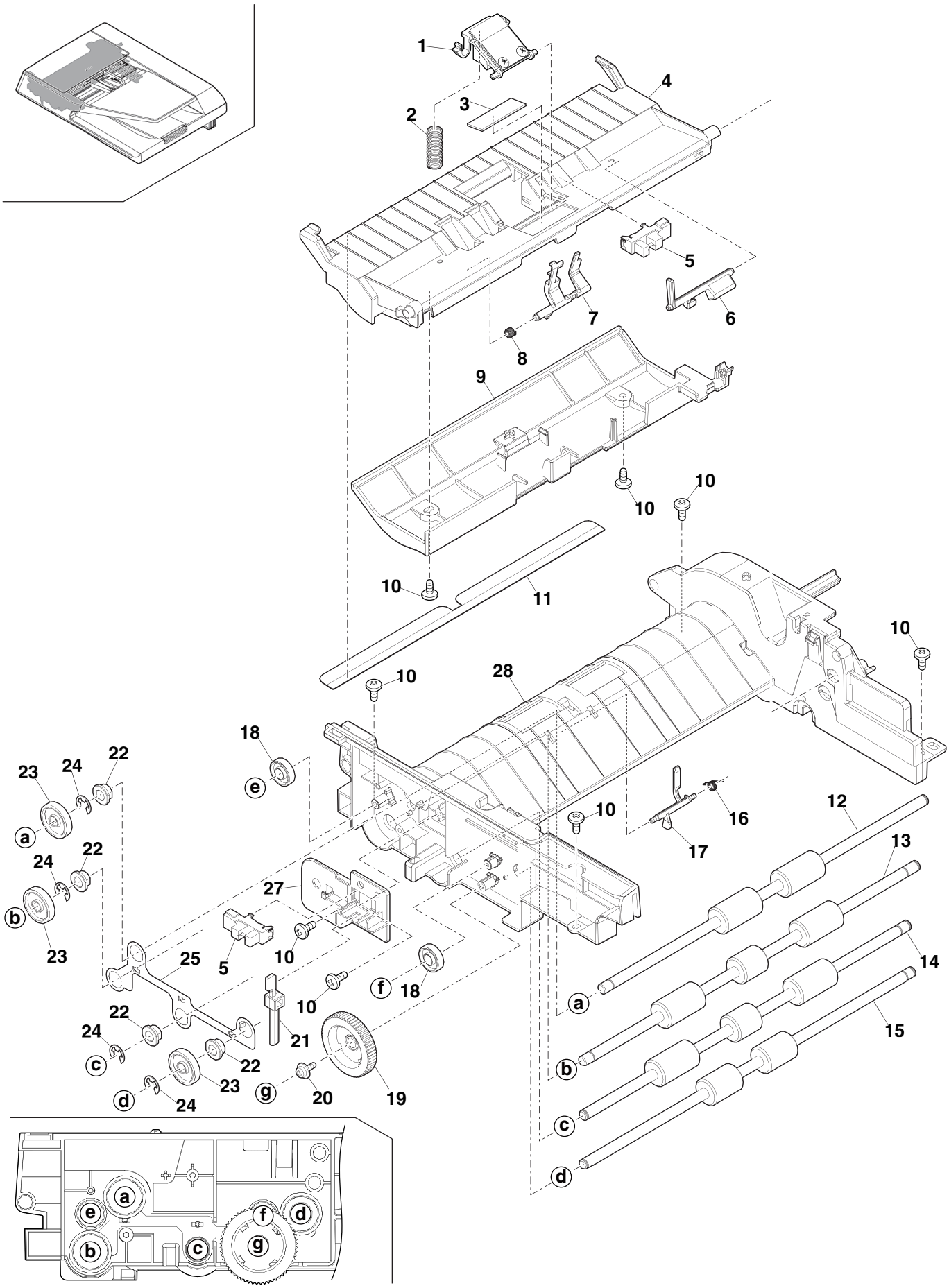

【C32】

RSPF 後ﾌﾚｰﾑ･下搬送 (RSPF Rear frame・Lower transport section)[MX-C303W, MX-C305W]

NO.	PARTS CODE	PRICE RANK Ex.	PRICE RANK Ja.	DESCRIPTION		Inter-change	Reason for change	Effective time
1	NGERH0523QSZZ	AQ	EQ	Gear(30T)	ｷﾞｱ			
2	NGERH0524QSZZ	AQ	EQ	Gear(36T)	ｷﾞｱ			
3	NGERH0527QSZZ	AQ	EQ	Gear(38T)	ｷﾞｱ			
4	QEARP0037QSZZ	AX	FQ	Grounding plate	ｱｰｽ板			
5	MSPRC0711QSZZ	AQ	EQ	PF grounding spring	PF ｱｰｽｽﾌﾟﾘﾝｸﾞ			
6	NBRGM0051QSZZ	AB	DJ	Bearing(φ6 PIB21)	軸受			
7	XRESP50−06000	AA	DD	E ring(E5)	E ﾘﾝｸﾞ			
8	PCLC−0047QSZZ	AV	FG	One way clutch	ﾜﾝｳｪｲｸﾗｯﾁ			
9	NGERH0522QSZZ	AQ	EQ	Gear(40T)	ｷﾞｱ			
10	NGERH0525QSZZ	AQ	EQ	Gear(40T)	ｷﾞｱ			
11	NGERH0528QSZZ	AQ	EQ	Gear(16T)	ｷﾞｱ			
12	NGERH2400FCZZ	AD	DJ	PS joint gear(32T)	PS 連結ｷﾞｱ			
13	NSFTZ0242QSZZ	AR	EQ	Clutch shaft	ｸﾗｯﾁ軸			
14	PCLC−0402FCZZ	AT	EZ	Clutch(3.5Kg)	ｸﾗｯﾁ			
15	XHBS730P06000	AC	DD	Screw(3×6)	ﾋﾞｽ			
16	LPLTM0987QSZZ	AX	FQ	Motor fixing plate	ﾓｰﾀｰ取付板			
17	XEBS730P08000	AC	DD	Screw(3×8)	ﾋﾞｽ			
18	RMŌTS0106QSPZ	BK	HG	Motor	ﾓｰﾀｰ			
19	PGｉDM0312QSZZ	AZ	FX	frame cover guide lower	ﾌﾚｰﾑｶﾊﾞｰｶﾞｲﾄﾞ下			
20	MSPRD0709QSZZ	AQ	EQ	Reading plate grounding spring	読取板ｱｰｽｽﾌﾟﾘﾝｸﾞ			
21	LPLTM0988QSZZ	AX	FQ	Reading plate	読取板			
22	PSHEP1011QSZZ	AQ	EQ	Reading sheet	読取ｼｰﾄ			
23	MSPRC0713QSZZ	AQ	EQ	Reading plate spring	読取板ｽﾌﾟﾘﾝｸﾞ			
24	MSPRD0717QSZZ	AQ	EQ	RS sensor spring	RS ｾﾝｻｰｽﾌﾟﾘﾝｸﾞ			
25	MLEVP0214QSZZ	AQ	EQ	RS sensor arm	RS ｾﾝｻｰｱｰﾑ			
26	VHPSG2A241+−1	AG	DX	Photo sensor(SG2A241)	ﾌｫﾄｾﾝｻｰ			
27	PSHEP1012QSZZ	AQ	EQ	Lower frame sheet	下ﾌﾚｰﾑｼｰﾄ			
28	MLEVP0212QSZZ	AQ	EQ	Cover sensor arm	ｶﾊﾞｰｾﾝｻｰｱｰﾑ			
29	LHLDZ0323QSZZ	AS	EZ	Arm cover sensor holder	ｱｰﾑｶﾊﾞｰｾﾝｻｰﾎﾙﾀﾞｰ			
30	MSPRC0712QSZZ	AQ	EQ	EJ grounding spring	EJ ｱｰｽｽﾌﾟﾘﾝｸﾞ			
31	QEARP0038QSZZ	AR	EQ	Brush plate	ﾌﾞﾗｼ板			
32	NGERH0526QSZZ	AQ	EQ	Gear(30T)	ｷﾞｱ			
33	XBBS730P06000	AC	DD	Screw(3×6)	ﾋﾞｽ			

【C32】

RSPF 後ﾌﾚｰﾑ･下搬送 (RSPF Rear frame・Lower transport section)[MX-C303W, MX-C305W]

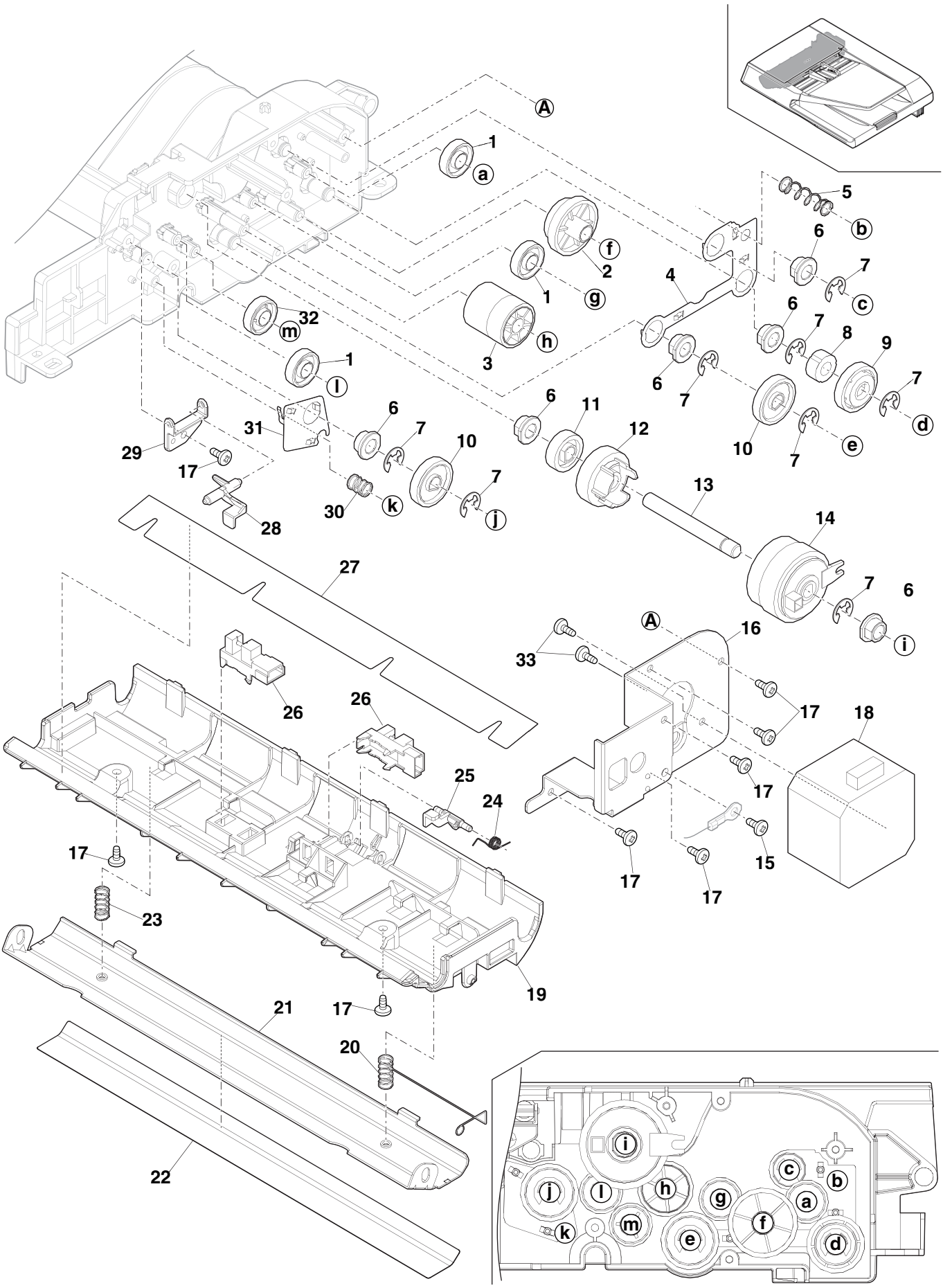

【C33】

RSPF ﾍﾞｰｽﾄﾚｲﾕﾆｯﾄ (RSPF Base tray unit)[MX-C303W,MX-C305W]

NO.	PARTS CODE	PRICE RANK Ex.	PRICE RANK Ja.	DESCRIPTION		Inter-change	Reason for change	Effective time
1	ＰＳＨＥＰ１０１７ＱＳＺＺ	AQ	EQ	In sheet	入紙ｼｰﾄ			
2	ＮＢＲＧＭ００５１ＱＳＺＺ	AB	DJ	Bearing(φ6 PIB21)	軸受			
3	ＸＲＥＳＰ５０－０６０００	AA	DD	E ring(E5)	Ｅﾘﾝｸﾞ			
4	ＶＨＰＳＧ２Ａ２４１＋－１	AG	DX	Photo sensor(SG2A241)	ﾌｫﾄｾﾝｻｰ			
5	ＸＥＢＳ７３０Ｐ０８０００	AC	DD	Screw(3×8)	ﾋﾞｽ			
6	ＬＰＬＴＭ０９９０ＱＳＺＺ	AX	FQ	Solenoid plate	ｿﾚﾉｲﾄﾞﾌﾟﾚｰﾄ			
7	ＰＳＰＯ－００４５ＱＳＺＺ	AN	EG	OC mat fixing sponge	OC ﾏｯﾄ取付ｽﾎﾟﾝｼﾞ			
8	ＸＢＢＳ７３０Ｐ０６０００	AC	DD	Screw(3×6)	ﾋﾞｽ			
9	ＭＬＥＶＰ０２１６ＱＳＺＺ	AQ	EQ	EJ2 Roller arm	EJ2 ﾛｰﾗｰｱｰﾑ			
10	ＲＰＬＵＲ００４５ＱＳＺＺ	BC	GJ	Solenoid	ｿﾚﾉｲﾄﾞ			
11	ＸＥＢＳ７４０Ｐ１６０００	AB	DD	Screw(4×16)	ﾋﾞｽ			
12	ＬＤＡｉＺ００７６ＱＳＺＺ	BQ	LP	Base tray	ﾍﾞｰｽﾄﾚｲ			
13	ＬＳＯＵ－００８４ＱＳＺＺ	AX	FQ	Delivery extension tray	排紙延長ﾄﾚｲ			
14	ＭＨＮＧ－００４１ＱＳＺＺ	BC	GJ	ADF hinge R	ADF ﾋﾝｼﾞ R			
15	ＭＨＮＧ－００４２ＱＳＺＺ	BC	GJ	ADF hinge L	ADF ﾋﾝｼﾞ L			
16	ＰＳＨＥＰ１１０５ＱＳＺＺ	BA	FX	OC mat	OC ﾏｯﾄ			
17	ＰＳＰＯ－００３９ＱＳＺＺ	AM	EG	Ej2 roller sponge	Ej2 ﾛｰﾗｰｽﾎﾟﾝｼﾞ			
18	ＮＳＦＴＢ０２４０ＱＳＺＺ	AR	EQ	EJ2 roller shaft	EJ2 ﾛｰﾗｰｼｬﾌﾄ			
19	ＮＲＯＬＰ０２７６ＱＳＺＺ	AR	EQ	EJ2 roller	EJ2 ﾛｰﾗｰ			
20	ＭＳＰＲＴ０７２１ＱＳＺＺ	AQ	EQ	EJ2 roller spring	EJ2 ﾛｰﾗｰｽﾌﾟﾘﾝｸﾞ			
21	ＬＰｉＮＳ００３６ＱＳＺＺ	AW	FG	Pin	ﾋﾟﾝ			
22	ＬＨＬＤＺ０３２５ＱＳＺＺ	AR	EQ	EJ2 roller plate holder	EJ2 ﾛｰﾗｰﾌﾟﾚｰﾄﾎﾙﾀﾞｰ			
23	ＮＳＦＴＺ０２４３ＱＳＺＺ	AX	FQ	EJ2 control shaft	EJ2 ｺﾝﾄﾛｰﾙｼｬﾌﾄ			
24	ＭＳＰＲＤ０７１９ＱＳＺＺ	AQ	EQ	EJ1 roller spring	EJ1 ﾛｰﾗｰｽﾌﾟﾘﾝｸﾞ			
25	ＮＲＯＬＰ０２７５ＱＳＺＺ	AR	EQ	PF2 L roller	PF2 L ﾛｰﾗｰ			
26	ＮＲＯＬＰ０２７４ＱＳＺＺ	AR	EQ	PF2 C roller	PF2 C ﾛｰﾗｰ			
27	ＮＳＦＴＢ０２３８ＱＳＺＺ	AT	EZ	PF1 roller shaft	PF1 ﾛｰﾗｰｼｬﾌﾄ			
28	ＬＰＬＴＭ０９８９ＱＳＺＺ	AX	FQ	PF2 roller plate	PF2 ﾛｰﾗｰﾌﾟﾚｰﾄ			
29	ＭＳＰＲＣ０７１５ＱＳＺＺ	AQ	EQ	PF2 Roller spring	PF2 ﾛｰﾗｰｽﾌﾟﾘﾝｸﾞ			
30	ＰＳＰＯ－００４０ＱＳＺ１	AW	FG	Solenoid l sponge	ｿﾚﾉｲﾄﾞ L ｽﾎﾟﾝｼﾞ			
	(Unit)							
901	ＤＵＮＴ－１３９５ＱＳＺＺ	BT	NE	Base tray unit	ﾍﾞｰｽﾄﾚｲﾕﾆｯﾄ			

【C33】

RSPF ﾍﾞｰｽﾄﾚｲﾕﾆｯﾄ (RSPF Base tray unit)[MX-C303W,MX-C305W]

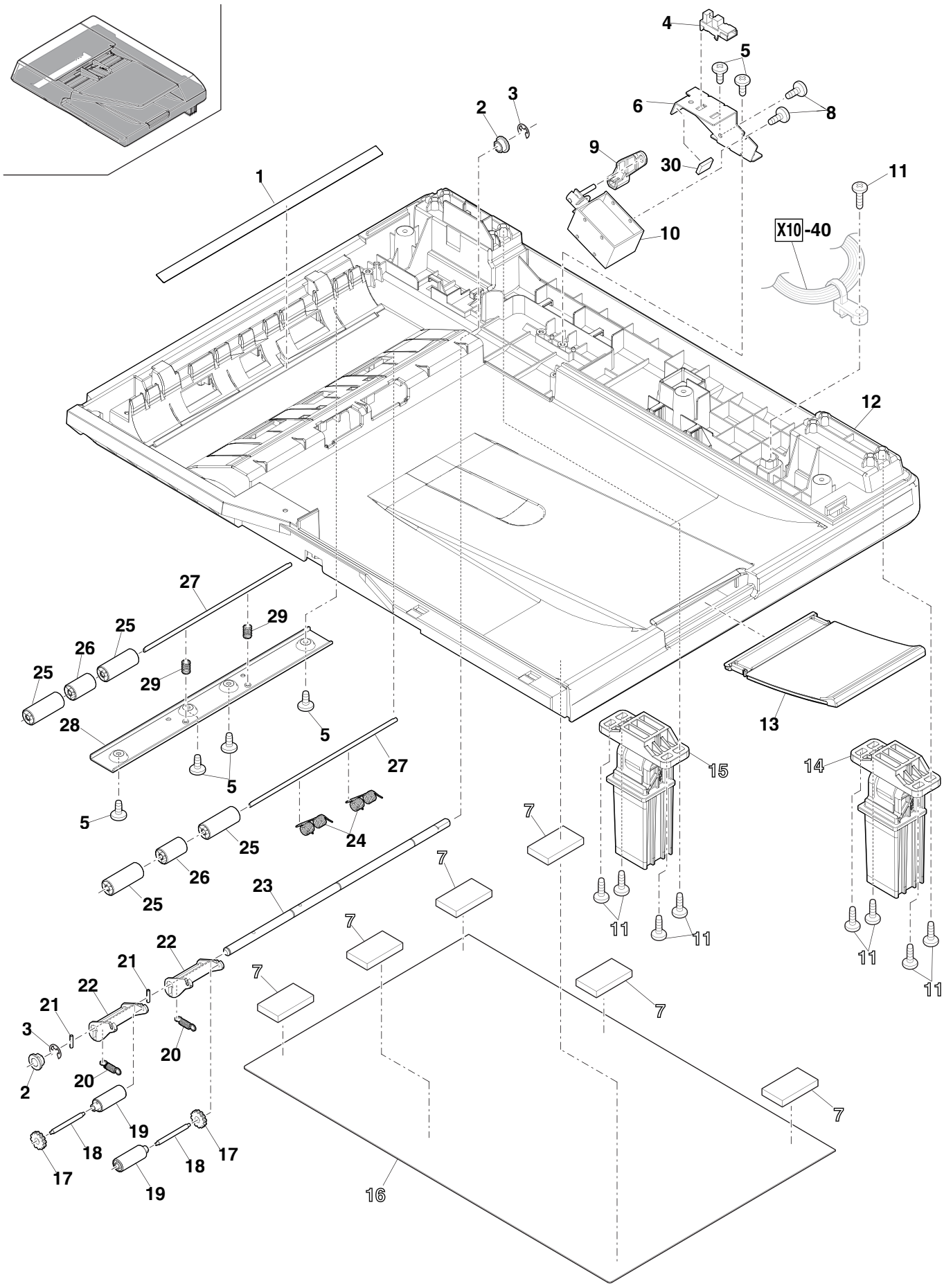

【D10】
ｽｷｬﾅｰﾕﾆｯﾄ (Scanner unit)[MX-C304W,MX-C306W]

	NO.	PARTS CODE	PRICE RANK Ex.	PRICE RANK Ja.	DESCRIPTION		Inter-change	Reason for change	Effective time
	1	DUNT-1400QSZZ	BM	HV	Document glass unit	原稿ｶﾞﾗｽﾕﾆｯﾄ			
	2	LFiX-0044QSZZ	AX	FQ	Scan right cover	ｽｷｬﾝ右ｶﾊﾞｰ			
	3	PSHEZ1055QSZZ	AQ	EQ	Low adhesion sheet	低粘着ｼｰﾄ			
	4	XHBS730P06000	AC	DD	Screw(3×6)	ﾋﾞｽ			
⚠	5	CPWBX0328QS61	CA	TV	Scan control PWB	Scan ｺﾝﾄﾛｰﾙ基板			
⚠	♣	CPWBX0328QS63	CA	TV	Scan control PWB	Scan ｺﾝﾄﾛｰﾙ基板			
	6	XEBS730P10000	AC	DD	Screw(3×10)	ﾋﾞｽ			
	7	LPLTM1022QSZZ	AZ	FX	Scan control PWB fixing plate	Scan ｺﾝﾄﾛｰﾙ基板取付板			
	8	NSFTP0254QSZZ	BH	HC	Scanner shaft	ｽｷｬﾅｰｼｬﾌﾄ			
	9	XRESP40-06000	AA	DD	E ring(E4)	E ﾘﾝｸﾞ			
	10	NPLYZ0077QSZZ	AQ	EQ	Idle pulley	ｱｲﾄﾞﾙﾌﾟｰﾘｰ			
	11	NBLTH0072QSZZ	AX	FQ	Driving timingbelt(FHT1_0-917T)	駆動ﾀｲﾐﾝｸﾞﾍﾞﾙﾄ			
	12	LX-WZ0314FHZ1	AQ	EQ	Washer(T0.25)	ﾎﾟﾘｽﾗｲﾀﾞｰ			
	13	CGERH0539QS01	AS	EZ	Gear(59T)	ｷﾞｱ			
	14	CPLTM1019QS01	AX	FQ	Motor plate	ﾓｰﾀｰﾌﾟﾚｰﾄ			
	15	RMŌTS0107QSPZ	BD	GT	Motor	ﾓｰﾀｰ			
	16	LFiX-0042QSZZ	AQ	EQ	Shaft clip right	軸ｸﾘｯﾌﾟ右			
	17	MSPRC0746QSZZ	AQ	EQ	Pulley spring	ﾌﾟｰﾘｰｽﾌﾟﾘﾝｸﾞ			
	18	LX-BZ1123FCPZ	AB	DD	Link fixing screw	ﾘﾝｸ取付ﾋﾞｽ			
	19	CPLTM1021QS01	AX	FQ	Pulley bracket	ﾌﾟｰﾘｰﾌﾞﾗｹｯﾄ			
	20	LPLTM1017QSZZ	AQ	EQ	GND plate	GND ﾌﾟﾚｰﾄ			
	21	PTPE-0108QSZZ	AQ	EQ	Scanner frame tape	ｽｷｬﾅｰﾌﾚｰﾑﾃｰﾌﾟ			
	22	LDAiZ0081QSZZ	BR	MJ	Scanner frame	ｽｷｬﾅｰﾌﾚｰﾑ			
	23	XEBS740P10000	AA	DD	Screw(4×10)	ﾋﾞｽ			
	24	XHBS730P08000	AB	DD	Screw(3×8)	ﾋﾞｽ			
	25	LRALM0031QSZZ	AX	FQ	CCD rail	CCD ﾚｰﾙ			
	26	LPLTM1016QSZZ	AX	FQ	Scanner frame plate	ｽｷｬﾅｰﾌﾚｰﾑ板			
	28	MSPRP0750QSZZ	AR	EQ	Plate shaft clip	ﾌﾟﾚｰﾄｼｬﾌﾄ ｸﾘｯﾌﾟ			
	29	VHPSG2A241+-1	AG	DX	Photo sensor(SG2A241)	ﾌｫﾄｾﾝｻｰ			
⚠	30	CPWBN0329QS52	BD	GN	LED driver PWB	LED ﾄﾞﾗｲﾊﾞｰ基板			
	31	LFiX-0043QSZZ	AS	EZ	FFC harness suppress	FFC ﾊｰﾈｽ押え			
	32	LPLTM1023QSZZ	AR	EQ	Heatsink	ﾋｰﾄｼﾝｸ			
	33	PSHEZ1035QSZZ	AQ	EQ	Heat dissipation sheet	放熱ｼｰﾄ			
⚠	34	CPWBL0295QS52	AS	EZ	LED PWB	LED 基板			
	35	CCŌV-0157QS51	BM	HV	Scanner cover unit	ｽｷｬﾅｰｶﾊﾞｰﾕﾆｯﾄ			
	36	VHiBR24T32W-1	AG	DS	EEPROM(BR24T32-W)	EEPROM			
	37	LPFTF0011QSZZ	AU	FG	Gear flange	ｷﾞｱﾌﾗﾝｼﾞ			
	38	MSPRP0749QSZZ	AR	EQ	Ground clip	ｱｰｽｸﾘｯﾌﾟ			
	39	TCADZ1178FCZZ	AB	DJ	Unpacking caution card	開梱注意紙			
	501	DUNT-1421QSZZ	CA	TV	CCD unit	CCD ﾕﾆｯﾄ			
		(Unit)							
	901	DUNT-1420QS13	CN	VC	Scanner unit	ｽｷｬﾅｰﾕﾆｯﾄ			
	♣	DUNT-1420QS14	CN	VC	Scanner unit	ｽｷｬﾅｰﾕﾆｯﾄ			

【D10】
ｽｷｬﾅｰﾕﾆｯﾄ (Scanner unit)[MX-C304W,MX-C306W]

Matrix

No.5	Scan ｺﾝﾄﾛｰﾙ基板 (Scan control PWB)		
PARTS CODE	MX-C304W		MX-C306W
	Americas	Europe	Japan
ＣＰＷＢＸ０３２８ＱＳ６１		1st Lot	1st Lot
ＣＰＷＢＸ０３２８ＱＳ６３	1st Lot		

No.901	ｽｷｬﾅｰﾕﾆｯﾄ (Scanner unit)		
PARTS CODE	MX-C304W		MX-C306W
	Americas	Europe	Japan
ＤＵＮＴ－１４２０ＱＳ１３		1st Lot	1st Lot
ＤＵＮＴ－１４２０ＱＳ１４	1st Lot		

【D10】

ｽｷｬﾅｰﾕﾆｯﾄ (Scanner unit)[MX-C304W,MX-C306W]

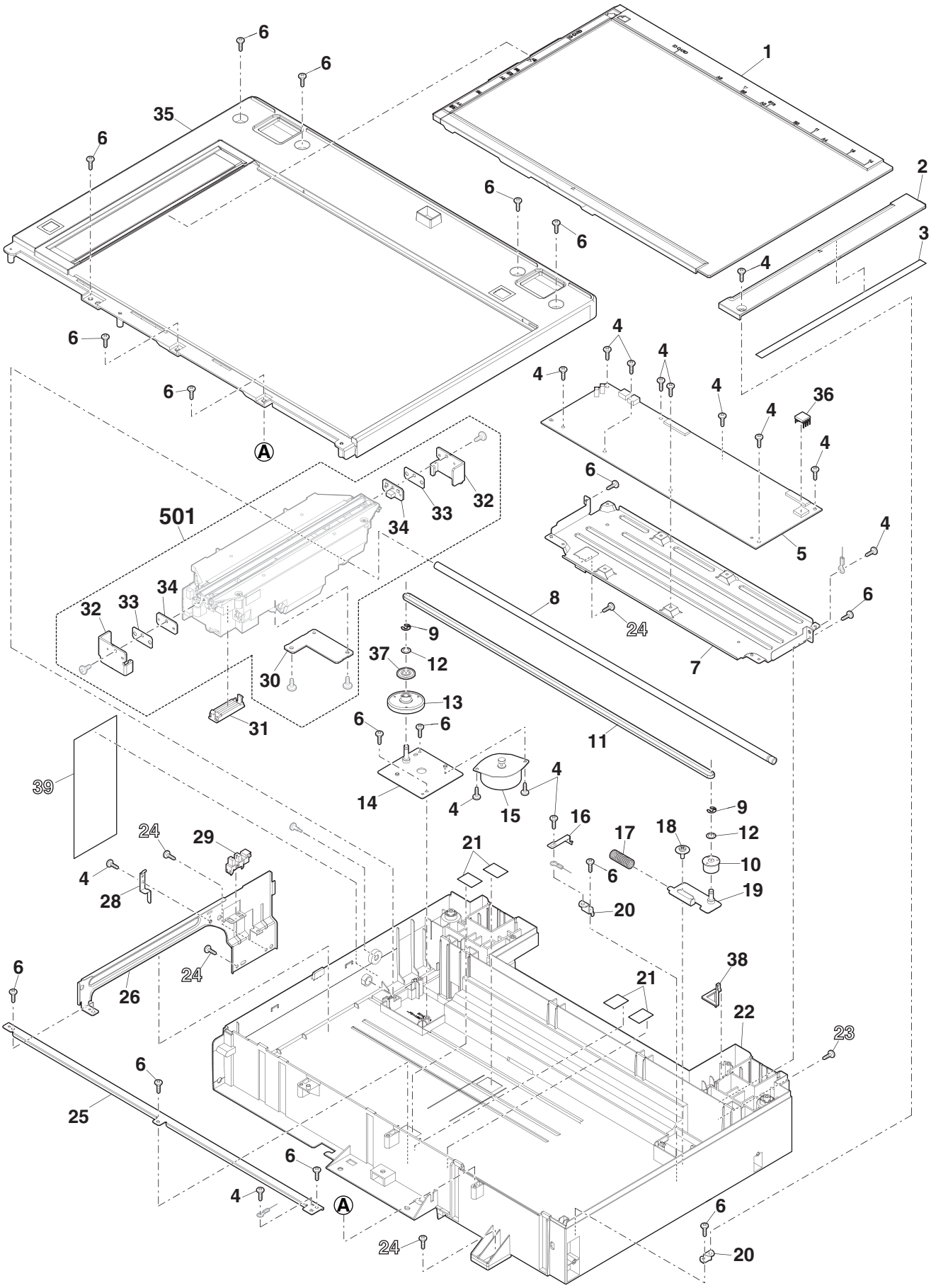

【D11】
ｽｷｬﾅｰﾕﾆｯﾄ (Scanner unit)[MX-C303W,MX-C305W]

	NO.	PARTS CODE	PRICE RANK Ex.	PRICE RANK Ja.	DESCRIPTION		Inter-change	Reason for change	Effective time
	1	DUNT-1400QSZZ	BM	HV	Document glass unit	原稿ｶﾞﾗｽﾕﾆｯﾄ			
	2	LFiX-0044QSZZ	AX	FQ	Scan right cover	ｽｷｬﾝ右ｶﾊﾞｰ			
	3	PSHEZ1055QSZZ	AQ	EQ	Low adhesion sheet	低粘着ｼｰﾄ			
	4	XHBS730P06000	AC	DD	Screw(3×6)	ﾋﾞｽ			
⚠	5	CPWBX0328QS67	BZ	TR	Scan control PWB	Scan ｺﾝﾄﾛｰﾙ基板			
⚠	♣	CPWBX0328QS69	BZ	TR	Scan control PWB	Scan ｺﾝﾄﾛｰﾙ基板			
	6	XEBS730P10000	AC	DD	Screw(3×10)	ﾋﾞｽ			
	7	LPLTM1022QSZZ	AZ	FX	Scan control PWB fixing plate	Scan ｺﾝﾄﾛｰﾙ基板取付板			
	8	NSFTP0254QSZZ	BH	HC	Scanner shaft	ｽｷｬﾅｰｼｬﾌﾄ			
	9	XRESP30-06000	AA	DD	E ring(E3)	Eﾘﾝｸﾞ			
	10	NPLYZ0076QSZZ	AQ	EQ	Idle pulley	ｱｲﾄﾞﾙﾌﾟｰﾘｰ			
	11	NBLTH0071QSZZ	AX	FQ	Driving timingbelt(FHT1_0-883T)	駆動ﾀｲﾐﾝｸﾞﾍﾞﾙﾄ			
	12	PCLR-0037QSZZ	AR	EQ	Driving collar	駆動ｶﾗｰ			
	13	NPLYZ0075QSZZ	AQ	EQ	Gear(60T6-25P)	ｷﾞｱ			
	14	CPLTM1018QS01	AX	FQ	Motor plate	ﾓｰﾀｰﾌﾟﾚｰﾄ			
	15	RMŌTS0108QSPZ	BC	GN	Motor	ﾓｰﾀｰ			
	16	LFiX-0042QSZZ	AQ	EQ	Shaft clip right	軸ｸﾘｯﾌﾟ右			
	17	MSPRC0746QSZZ	AQ	EQ	Pulley spring	ﾌﾟｰﾘｰｽﾌﾟﾘﾝｸﾞ			
	18	LX-BZ1123FCPZ	AB	DD	Link fixing screw	ﾘﾝｸ取付ﾋﾞｽ			
	19	CPLTM1020QS01	AX	FQ	Pulley bracket	ﾌﾟｰﾘｰﾌﾞﾗｹｯﾄ			
	20	LPLTM1017QSZZ	AQ	EQ	GND plate	GND ﾌﾟﾚｰﾄ			
	21	PTPE-0108QSZZ	AQ	EQ	Scanner frame tape	ｽｷｬﾅｰﾌﾚｰﾑﾃｰﾌﾟ			
	22	LDAiZ0080QSZZ	BR	MJ	Scanner frame	ｽｷｬﾅｰﾌﾚｰﾑ			
	23	XEBS740P10000	AA	DD	Screw(4×10)	ﾋﾞｽ			
	24	XHBS730P08000	AB	DD	Screw(3×8)	ﾋﾞｽ			
	25	LRALM0031QSZZ	AX	FQ	CCD rail	CCD ﾚｰﾙ			
	26	LPLTM1016QSZZ	AX	FQ	Scanner frame plate	ｽｷｬﾅｰﾌﾚｰﾑ板			
	28	MSPRP0750QSZZ	AR	EQ	Plate shaft clip	ﾌﾟﾚｰﾄｼｬﾌﾄ ｸﾘｯﾌﾟ			
	29	VHPSG2A241+-1	AG	DX	Photo sensor(SG2A241)	ﾌｫﾄｾﾝｻｰ			
⚠	30	CPWBN0329QS51	BB	HC	LED driver PWB	LED ﾄﾞﾗｲﾊﾞｰ基板			
	31	LFiX-0686FCZZ	AD	DJ	FFC harness fixture	FFC ﾊｰﾈｽ押え			
	32	LPLTM1023QSZZ	AR	EQ	Heatsink	ﾋｰﾄｼﾝｸ			
	33	PSHEZ1035QSZZ	AQ	EQ	Heat dissipation sheet	放熱ｼｰﾄ			
⚠	34	CPWBL0295QS52	AS	EZ	LED PWB	LED 基板			
	35	CCŌV-0156QS51	BM	HV	Scanner cover unit	ｽｷｬﾅｰｶﾊﾞｰﾕﾆｯﾄ			
	36	VHiBR24T32W-1	AG	DS	EEPROM(BR24T32-W)	EEPROM			
	37	TCADZ1178FCZZ	AB	DJ	Unpacking caution card	開梱注意紙			
	501	DUNT-1399QSZZ	BZ	TR	CCD unit	CCD ﾕﾆｯﾄ			
		(Unit)							
	901	DUNT-1397QS13	CL	UW	Scanner unit	ｽｷｬﾅｰﾕﾆｯﾄ			
	♣	DUNT-1397QS14	CL	UW	Scanner unit	ｽｷｬﾅｰﾕﾆｯﾄ			

【D11】
ｽｷｬﾅｰﾕﾆｯﾄ (Scanner unit)[MX-C303W,MX-C305W]

Matrix

No.5	Scan ｺﾝﾄﾛｰﾙ基板 (Scan control PWB)		
PARTS CODE	MX-C303W		MX-C305W
	Americas	Europe	Japan
ＣＰＷＢＸ０３２８ＱＳ６７		1st Lot	1st Lot
ＣＰＷＢＸ０３２８ＱＳ６９	1st Lot		

No.901	ｽｷｬﾅｰﾕﾆｯﾄ (Scanner unit)		
PARTS CODE	MX-C303W		MX-C305W
	Americas	Europe	Japan
ＤＵＮＴ－１３９７ＱＳ１３	1st Lot		
ＤＵＮＴ－１３９７ＱＳ１４		1st Lot	1st Lot

【D11】

ｽｷｬﾅｰﾕﾆｯﾄ (Scanner unit)[MX-C303W,MX-C305W]

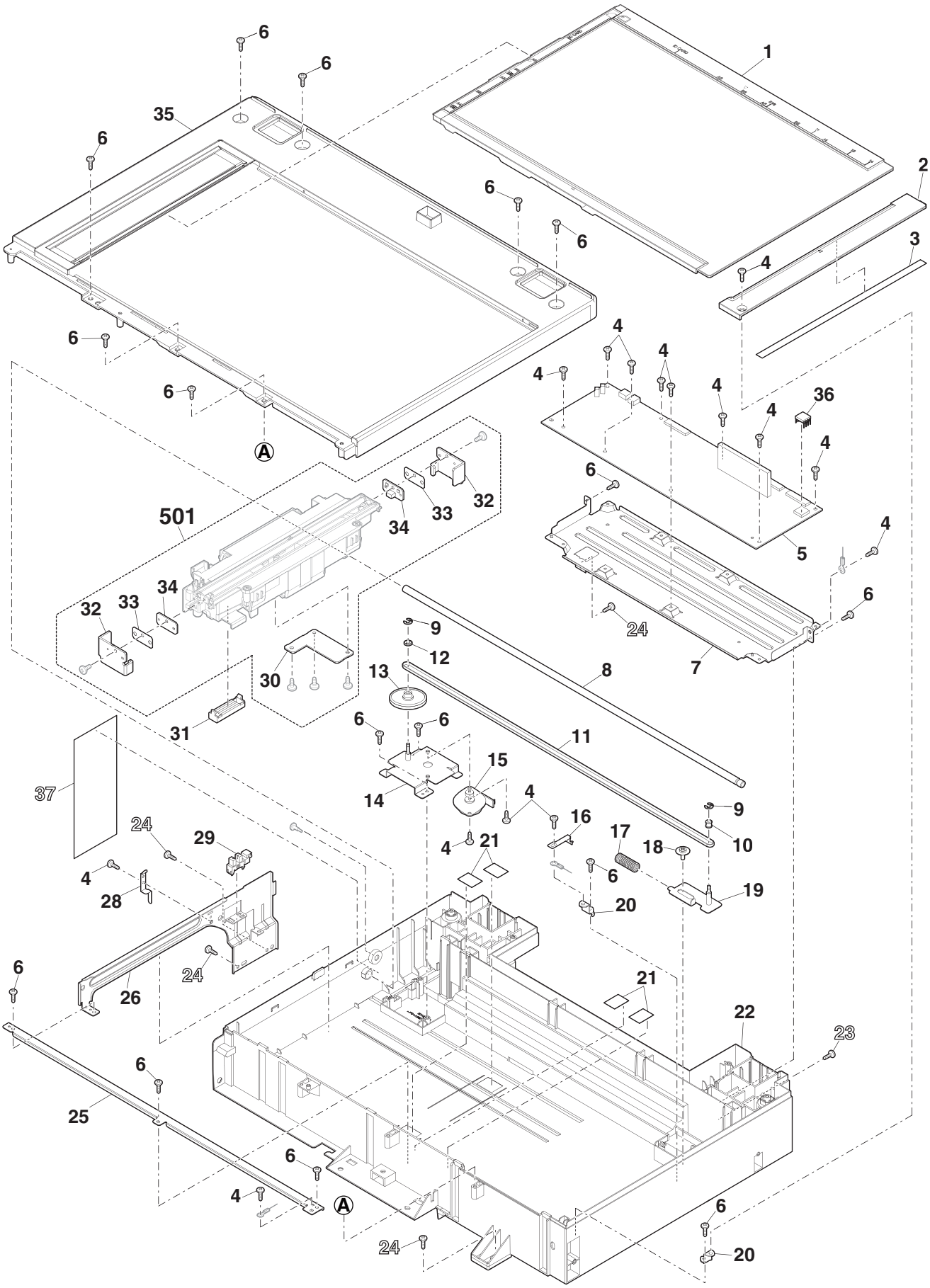

【F10】

手差しﾏﾙﾁ給紙ﾕﾆｯﾄ (Multi manual paper feeding unit)

NO.	PARTS CODE	PRICE RANK Ex.	PRICE RANK Ja.	DESCRIPTION		Inter-change	Reason for change	Effective time
1	PCŌVP0194QSZ1	AG	DX	MF maintenance cover	MF ﾒﾝﾃﾅﾝｽｶﾊﾞｰ			
3	LDAiU0051QSZZ	AQ	EQ	MF base plate	MF 台板			
4	XEBS730P08000	AC	DD	Screw(3×8)	ﾋﾞｽ			
5	PGiDM0234QSZZ	AK	DX	MF lower PG	MF 下ﾍﾟｰﾊﾟｰｶﾞｲﾄﾞ			
6	LSTPP0016QSZZ	AC	DJ	Resin ring(E5)	樹脂ﾘﾝｸﾞ			
7	NRŌLR0212QSB1	AM	EG	Paper feeding roller	給紙ﾛｰﾗｰ			
8	NCPL−0081FCBZ	AH	DX	One way coupling	ﾜﾝｳｪｲｶｯﾌﾟﾘﾝｸﾞ			
9	NBRGM0968FCZZ	AC	DD	Bearing(φ6)	軸受			
10	XRESP50−06000	AA	DD	E ring(E5)	Eﾘﾝｸﾞ			
11	XEPS730P08X00	AA	DD	Screw(3×8X)	ﾋﾞｽ			
12	QEARP0021QSZZ	AD	DJ	MF earth plate	MF ｱｰｽ板			
13	LPiNS0327FCZZ	AC	DJ	Spring pin(φ2-10)	ｽﾌﾟﾘﾝｸﾞﾋﾟﾝ			
14	NGERH0370QSZZ	AC	DD	MF Paper feed roller gear	MF 給紙ﾛｰﾗｰｷﾞｱ			
15	LHLDZ0201QSZZ	AE	DJ	MF separate roller holder	MF 分離ﾛｰﾗｰﾎﾙﾀﾞｰ			
16	MSPRC0542QSZZ	AC	DD	MF separate pressure spring	MF 分離加圧ｽﾌﾟﾘﾝｸﾞ			
17	XRESP30−04000	AA	DD	E ring(E3)	Eﾘﾝｸﾞ			
18	LFiX−0038QSZZ	AC	DD	Torque limiter fixer	ﾄﾙｸﾘﾐｯﾀｰ押え			
19	NSFTZ0154QSZZ	AE	DS	Follower roller shaft	従動ﾛｰﾗｰ軸			
20	MSPRC0578QSZZ	AF	DS	MF torque limiter spring	MF ﾄﾙｸﾘﾐｯﾀｰｽﾌﾟﾘﾝｸﾞ			
21	NRŌLR0213QSAZ	AK	DX	Separation roller	分離ﾛｰﾗｰ			
22	VHPSG2A241+−1	AG	DX	Photo sensor(SG2A241)	ﾌｫﾄｾﾝｻｰ			
23	NSFTD0164QSZ2	AT	EZ	MF paper feed shaft	MF 給紙ｼｬﾌﾄ			
24	NGERH1634FCZZ	AR	EQ	Separate gear(18T)	分離ｷﾞｱ			
25	PGiDM0218QSZZ	AL	EB	MF upper paper guide	MF 上ﾍﾟｰﾊﾟｰｶﾞｲﾄﾞ			
26	PCŌVP0206QSZ1	AE	DS	MF separate roller cover	MF 分離ﾛｰﾗｰｶﾊﾞｰ			
27	PTPE−0076QSZZ	AC	DD	Pick up plate sheet	呼び込みﾌﾟﾚｰﾄｼｰﾄ			
28	LPLTM0685QSZ1	AC	DD	Pick up plate	呼び込みﾌﾟﾚｰﾄ			
29	MSPRD0546QSZZ	AC	DD	MF paper existence detect actuator spring	MF 用紙有無検知ｱｸﾁｪｰﾀｽﾌﾟﾘﾝｸﾞ			
30	MLEVP0167QSZZ	AD	DJ	MF paper existence detect actuator	MF 用紙有無検知ｱｸﾁｪｰﾀ			
31	LX−WZ0448FCZZ	AB	DD	Poly slider(6×12×0.5)	ﾎﾟﾘｽﾗｲﾀﾞｰ			
32	NSFTZ0179QSZZ	AD	DJ	MF gear fulcrum shaft	MF ｷﾞｱ支点軸			
33	LHLDZ0228QSZZ	AD	DJ	MF lock holder	MF ﾛｯｸﾎﾙﾀﾞｰ			
34	NGERH0362QSZ2	AD	DJ	MF gear	MF ｷﾞｱ			
35	MSPRD4511QSZZ	AP	EQ	MF brake spring	MF ﾌﾞﾚｰｷｽﾌﾟﾘﾝｸﾞ			
36	LPLTP0663QSZZ	AE	DS	MF size regulation plate R	MF ｻｲｽﾞ規制板 R			
37	PSHEZ0830QSZZ	AB	DD	MF damper suede	MF 消音ｽｳｪｰﾄﾞ			
38	LPLTP0661QSZZ	AL	EB	MF rotation plate	MF 回転板			
39	PSHEZ0777QSZZ	AC	DD	Rotation plate pick up sheet	回転板呼び込みｼｰﾄ			
40	LPLTP0662QSZZ	AE	DS	MF size regulation plate L	MF ｻｲｽﾞ規制板 L			
41	PMLT−0247QSZZ	AC	DD	MF damper cushion	MF 消音ﾓﾙﾄ			
42	NGERH0371QSZZ	AC	DD	MF regulation plate gear	MF 規制板ｷﾞｱ			
43	MSPRC0543QSZZ	AC	DD	MF rotation plate spring	MF 回転板ｽﾌﾟﾘﾝｸﾞ			
44	MSPRC0544QSZZ	AC	DD	MF rotation plate lock spring	MF 回転板ﾛｯｸｽﾌﾟﾘﾝｸﾞ			
45	MLŌKZ0008QSZZ	AE	DS	MF rotation plate lock	MF 回転板ﾛｯｸ			
46	LPLTP0664QSZZ	AE	DJ	MF lock interlocking plate	MF ﾛｯｸ連動板			
47	MARMP0083QSZZ	AD	DJ	Rotation fulcrum arm	回転支点ｱｰﾑ			
48	LSŌU−0067QSB3	AU	EZ	MF exterior tray	MF 外装ﾄﾚｲ			
49	LSŌU−0066QSZZ	AK	EB	MF extension tray	MF 延長ﾄﾚｲ			
501	CSŌU−0067US51	AY	FQ	Manual paper feed tray unit	手差しﾄﾚｲﾕﾆｯﾄ			
	(Unit)							
901	CDAiU0051US54	BN	HZ	Multi manual paper feeding unit	手差しﾏﾙﾁ給紙ﾕﾆｯﾄ			

【F10】

手差しﾏﾙﾁ給紙ﾕﾆｯﾄ (Multi manual paper feeding unit)

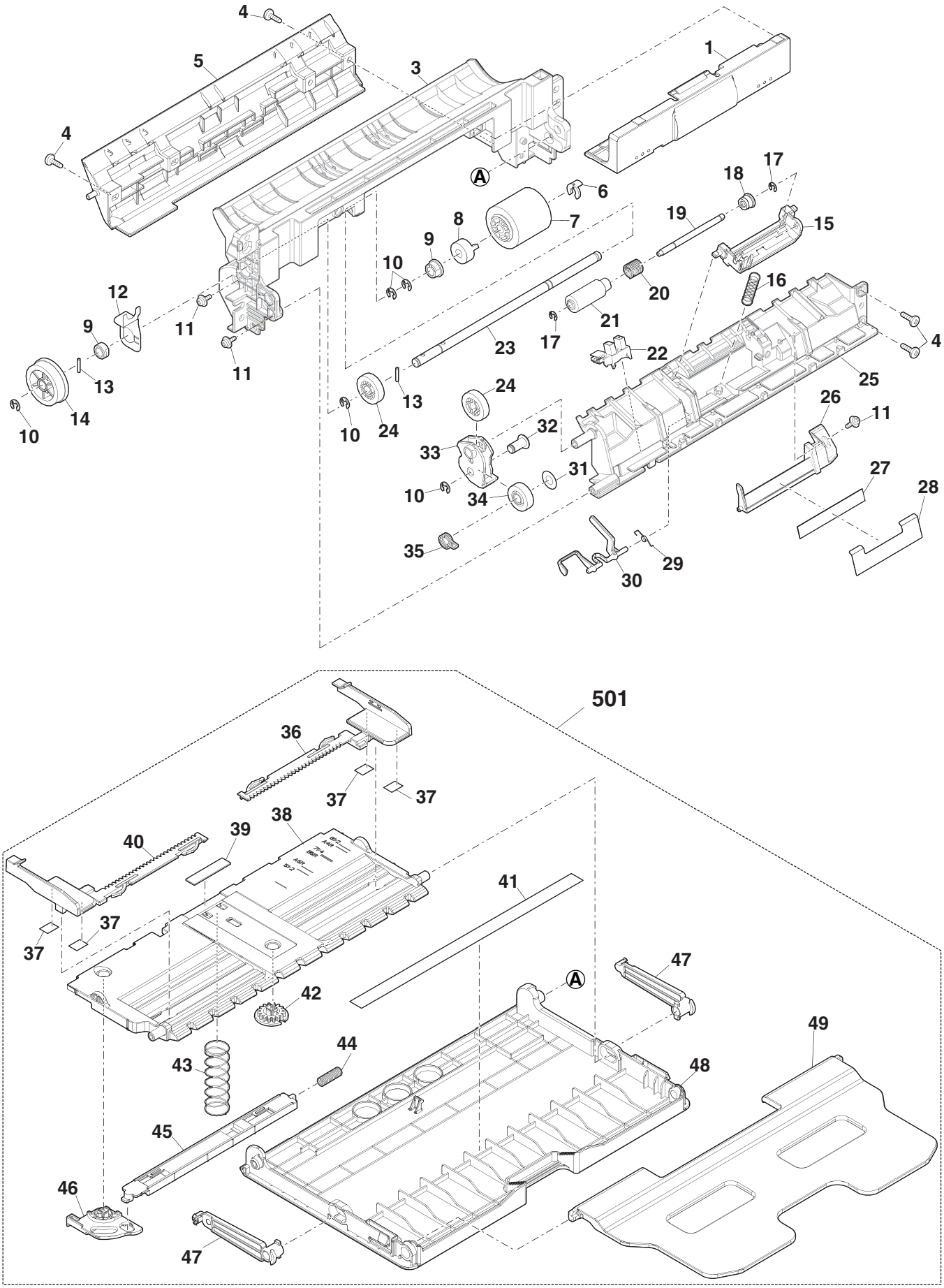

【F20】
給紙ﾄﾚｲﾕﾆｯﾄ (Paper feed tray unit)

NO.	PARTS CODE	PRICE RANK Ex.	PRICE RANK Ja.	DESCRIPTION		Inter-change	Reason for change	Effective time
1	PRNGP0090FCZ1	AB	DJ	Resin ring(E5)	樹脂ﾘﾝｸﾞ			
2	NBRGC0387FCZ1	AC	DJ	Bearing	軸受			
3	NRŌLR0212QSA1	AM	EG	Paper feeding roller	給紙ﾛｰﾗｰ			
4	LPiNS0265FCZZ	AB	DJ	SP Pin(3×12)	SP ﾋﾟﾝ			
5	NSFTZ0261QSZZ	AX	FG	Paper feed shaft	給紙軸			
6	XRESP50−06000	AA	DD	E ring(E5)	E ﾘﾝｸﾞ			
7	NBRGP0696FCZZ	AE	DJ	Bearing	軸受			
8	LPiNS0133FCZZ	AA	DD	Pin(φ2-10)	平行ﾋﾟﾝ			
9	NGERH0379QSZZ	AD	DD	Paper feed gear	給紙ｷﾞｱ			
10	LPLTP1060QSZZ	AV	FG	A6 regulation plate R	A6 規制板 R			
11	LPLTP1059QSZZ	AV	FG	A6 regulation plate F	A6 規制板 F			
12	PSHEZ0777QSZZ	AC	DD	Rotation plate pick up sheet	回転板呼び込みｼｰﾄ			
13	LPLTP1058QSZZ	AY	FQ	Rotation plate	回転板			
14	MSPRC0503QSZZ	AC	DD	Cassette pick up spring	ｶｾｯﾄ呼び込みｽﾌﾟﾘﾝｸﾞ			
15	PGiDM0216QSZZ	AG	DS	Regulation plate R	規制板 R			
16	PSHEP0758QSZZ	AC	DD	Paper feed Front separate sheet	給紙前ｻﾊﾞｷｼｰﾄ			
17	LPLTM0685QSZZ	AC	DD	Pick up plate	呼び込みﾌﾟﾚｰﾄ			
18	PTPE−0076QSZZ	AC	DD	Pick up plate sheet	呼び込みﾌﾟﾚｰﾄｼｰﾄ			
19	PGiDM0217QSZZ	AG	DS	Regulation plate F	規制板 F			
20	MSPRC0572QSZ1	AC	DD	Regulation plate spring	規制板ｽﾌﾟﾘﾝｸﾞ			
21	XRESP30−04000	AA	DD	E ring(E3)	E ﾘﾝｸﾞ			
22	NRŌLR0213QSAZ	AK	DX	Separation roller	分離ﾛｰﾗｰ			
23	MSPRC0506QSZZ	AF	DS	MF torque limiter spring	MF ﾄﾙｸﾘﾐｯﾀｰｽﾌﾟﾘﾝｸﾞ			
24	NSFTZ0154QSZZ	AE	DS	Follower roller shaft	従動ﾛｰﾗｰ軸			
25	LFiX−0038QSZZ	AC	DD	Torque limiter fixer	ﾄﾙｸﾘﾐｯﾀｰ押え			
26	LHLDZ0189QSZZ	AE	DJ	Separate roller holder	分離ﾛｰﾗｰﾎﾙﾀﾞｰ			
27	MSPRC0505QSZ1	AC	DD	Separate sheet pressure spring	分離加圧ｽﾌﾟﾘﾝｸﾞ			
28	LPLTP0683QSAZ			Regulation plate rear	規制板後			
29	NGERH0371QSZZ	AC	DD	MF regulation plate gear	MF 規制板ｷﾞｱ			
30	LPLTP0651QSZZ	AD	DJ	Tray rear plate	ｶｾｯﾄ後端板			
31	LHLDW1226FCZZ	AB	DJ	Turn fastener	ﾀｰﾝﾌｧｽﾅｰ			
32	XEBS730P08000	AC	DD	Screw(3×8)	ﾋﾞｽ			
33	MSPRC0555QSZ1	AD	DJ	Cassette earth spring	ｶｾｯﾄｱｰｽｽﾌﾟﾘﾝｸﾞ			
34	GCASP0010QSZ1	AZ	FQ	250 cassette	250 ｶｾｯﾄ			
35	LPLTP0650QSZZ	AD	DD	Rotation plate lock	回転板ﾛｯｸ			
36	MSPRC1145FCZZ	AA	DD	Stopper spring	ｽﾄｯﾊﾟｰｽﾌﾟﾘﾝｸﾞ			
37	NGERH0377QSZZ	AD	DJ	Paper feed coupling gear	給紙ｶｯﾌﾟﾘﾝｸﾞｷﾞｱ			
38	NGERH0343QSZZ	AD	DD	Paper feed idle gear	給紙ｱｲﾄﾞﾙｷﾞｱ			
39	GCAB−0295QSZZ	BB	GD	Cassette cabinet	ｶｾｯﾄｷｬﾋﾞ			
40	JHNDP0025QSZZ	AV	FG	Cassette handle	ｶｾｯﾄ取手			
41	TCADZ0714QSZZ	AN	EQ	Size display card	ｻｲｽﾞ表示ｶｰﾄﾞ			
42	TLABZ5059FCZZ	AB	DJ	BM link label	BM ﾘﾝｸﾗﾍﾞﾙ			
501	CFiX−0038US51	AN	EQ	Cassette separate unit	ｶｾｯﾄ分離ﾕﾆｯﾄ			
	(Unit)							
901	DUNT−1473USZZ	BS	MW	Paper feed tray unit	給紙ﾄﾚｲﾕﾆｯﾄ			

【F20】
給紙ﾄﾚｲﾕﾆｯﾄ (Paper feed tray unit)

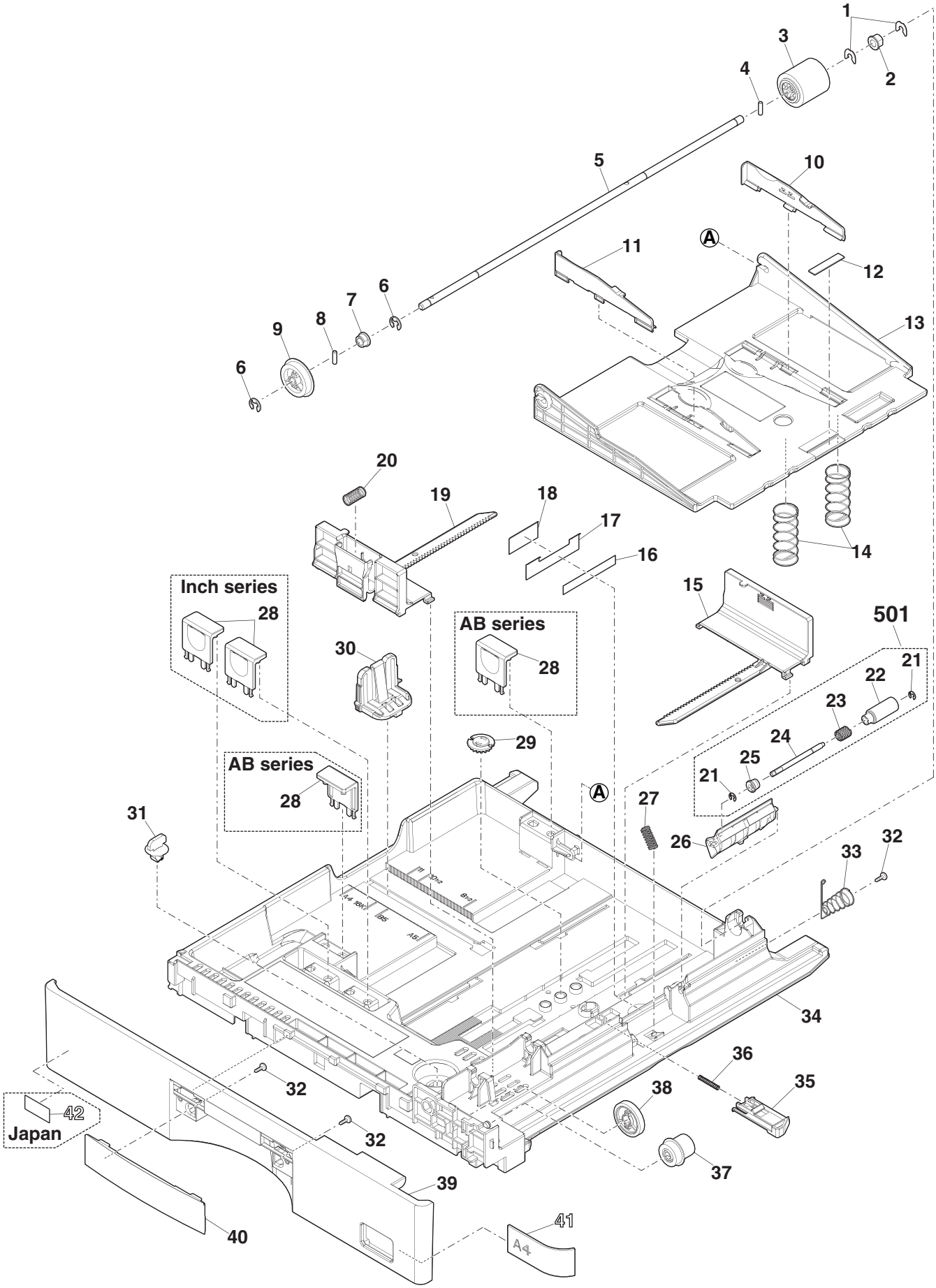

【H10】
右ﾄﾞｱﾕﾆｯﾄ (Right door unit)

NO.	PARTS CODE	PRICE RANK Ex.	PRICE RANK Ja.	DESCRIPTION		Inter-change	Reason for change	Effective time
1	GCAB−0294QSZZ	AZ	FQ	ADU cabinet	ADU ｷｬﾋﾞ			
2	GCŌV−0162QSZZ	AY	FQ	ADU upper cover	ADU 上ｶﾊﾞｰ			
3	XEBS730P08000	AC	DD	Screw(3×8)	ﾋﾞｽ			
4	MLEVP0226QSZZ	AQ	EQ	Right door lock release lever	右ﾄﾞｱﾛｯｸ解除ﾚﾊﾞｰ			
5	XHBS730P08000	AB	DD	Screw(3×8)	ﾋﾞｽ			
6	LSTYM0012QSZZ	AF	DS	Right door lock support plate	右ﾄﾞｱﾛｯｸ保持板			
7	MSPRD0529QSZZ	AC	DD	Right door lock spring	右ﾄﾞｱﾛｯｸｽﾌﾟﾘﾝｸﾞ			
8	PTME−0050QSZ1	AT	EZ	Right door lock pawl L	右ﾄﾞｱﾛｯｸ爪 L			
9	PTME−0049QSZZ	AF	DS	Right door lock pawl R	右ﾄﾞｱﾛｯｸ爪 R			
10	NRŌLR0221QSZZ	AN	EG	Right door paper enter roller	右ﾄﾞｱ入紙ﾛｰﾗｰ			
11	NBRGP0696FCZZ	AE	DJ	Bearing	軸受			
12	XRESP50−06000	AA	DD	E ring(E5)	E ﾘﾝｸﾞ			
13	LDAiU0059QSZ2	BG	GT	Right door base plate	右ﾄﾞｱ台板			
14	NGERH0345QSZZ	AD	DJ	Right door joint gear(17T)	右ﾄﾞｱ連結ｷﾞｱ			
15	NBLTH0064QSZ1	AG	DX	ADU transport belt	ADU 搬送ﾍﾞﾙﾄ			
16	NPLYZ0054QSZZ	AC	DD	Pulley(25P)	ﾌﾟｰﾘｰ			
17	LPiNS0327FCZZ	AC	DJ	Spring pin(φ2-10)	ｽﾌﾟﾘﾝｸﾞﾋﾟﾝ			
18	NBRGC0651FCZZ	AD	DJ	Bearing	軸受			
19	NRŌLR0222QSZZ	AN	EG	Right door paper exit roller	右ﾄﾞｱ出紙ﾛｰﾗｰ			
20	RDTCH0252FCZZ	AU	EZ	Temperature-humidity sensor	温湿度ｾﾝｻｰ			
21	LHLDZ0215QSZ1	BB	GD	Temperature-humidity sensor holder	温湿度ｾﾝｻｰﾎﾙﾀﾞｰ			
22	PGiDM0221QSZZ	AQ	EQ	Right door paper enter paper guide	右ﾄﾞｱ入紙ﾍﾟｰﾊﾟｰｶﾞｲﾄﾞ			
23	MSPRC0580QSZZ	AC	DD	Rear lower paper guide pressure spring	後下ﾍﾟｰﾊﾟｰｶﾞｲﾄﾞ加圧ｽﾌﾟﾘﾝｸﾞ			
24	PTME−0271FCZZ	AD	DJ	Tray lock pawl	ﾄﾚｲﾛｯｸ爪			
25	NRŌLP1774FCZZ	AD	DJ	Transport follower roller	搬送従動ﾛｰﾗｰ			
26	MSPRD0530QSZZ	AC	DD	Right door follower roller pressure spring	右ﾄﾞｱ従動ﾛｰﾗｰ加圧ｽﾌﾟﾘﾝｸﾞ			
27	MSPRD0571QSZZ	AC	DD	Paper exit roller pressure spring	出紙ﾛｰﾗｰ加圧ｽﾌﾟﾘﾝｸﾞ			
28	TLABZ5468FCZZ	AA	DJ	ADU green label	ADU ｸﾞﾘｰﾝﾗﾍﾞﾙ			
29	PGiDM0222QSZZ	AQ	EQ	Right door Open/close paper guide	右ﾄﾞｱ開閉ﾍﾟｰﾊﾟｰｶﾞｲﾄﾞ			
30	LPLTP0652QSZZ	AD	DJ	Right door Open/close paper guide fixing plate	右ﾄﾞｱ開閉ﾍﾟｰﾊﾟｰｶﾞｲﾄﾞ固定板			
31	XEBS740P10000	AA	DD	Screw(4×10)	ﾋﾞｽ			
32	MSPRC0549QSZZ	AC	DD	Right door earth spring B	右ﾄﾞｱｱｰｽｽﾌﾟﾘﾝｸﾞ B			
33	MSPRC0511QSZZ	AC	DD	Right door earth spring A	右ﾄﾞｱｱｰｽｽﾌﾟﾘﾝｸﾞ A			
34	PSHEP1108QSZZ	AL	EB	Temperature-humidity sensor protect sheet	温湿度ｾﾝｻｰ保護ｼｰﾄ			
	(Unit)							
901	DUNT−1471USZZ	BX	RR	Right door unit [Include Block[F10]]	右ﾄﾞｱﾕﾆｯﾄ			

【H10】
右ﾄﾞｱﾕﾆｯﾄ (Right door unit)

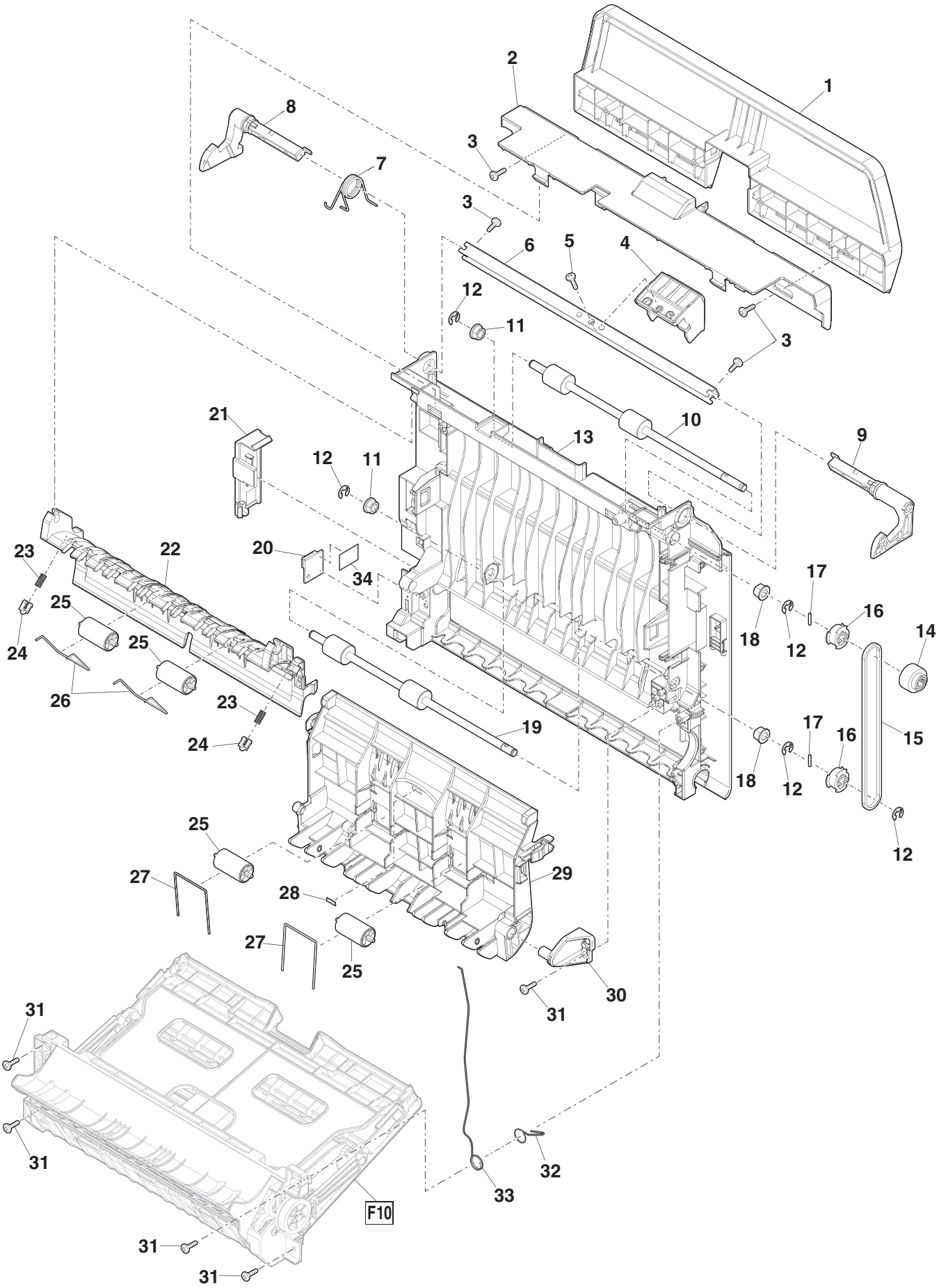

【H50】

PS ﾕﾆｯﾄ (PS unit)

NO.	PARTS CODE	PRICE RANK Ex.	PRICE RANK Ja.	DESCRIPTION		Inter-change	Reason for change	Effective time
1	ＮＳＦＴＺ０２６０ＱＳＺＺ	AY	FQ	PS roller shaft	PS ﾛｰﾗｰｼｬﾌﾄ			
2	ＬＰｉＮＳ０１３３ＦＣＺＺ	AA	DD	Pin(φ2-10)	平行ﾋﾟﾝ			
3	ＮＲＯＬＰ０２４９ＱＳＺＺ	AD	DJ	PS follower roller	PS 従動内側ﾛｰﾗｰ			
4	ＰＲＮＧＰ０１０９ＦＣＺＺ	AA	DJ	Crescent ring(φ8)	ｸﾚｾﾝﾄﾘﾝｸﾞ			
5	ＮＲＯＬＰ０２５０ＱＳＺＺ	AD	DJ	PS follower roller	PS 従動外側ﾛｰﾗｰ			
6	ＮＧＥＲＨ０３４７ＱＳＺＺ	AC	DD	PS follower gear	PS 従動ｷﾞｱ			
7	ＸＲＥＳＰ５０－０６０００	AA	DD	E ring(E5)	E ﾘﾝｸﾞ			
8	ＭＳＰＲＴ０５４８ＱＳＺＺ	AD	DJ	PS pressure spring	PS 加圧ｽﾌﾟﾘﾝｸﾞ			
9	ＮＢＲＧＰ００５２ＱＳＺＺ	AC	DD	PS shaft bearing	PS 軸受			
10	ＬＤＡｉＵ００５８ＱＳＺ３	AN	EQ	PS base plate	PS 台板			
11	ＸＥＢＳ７４０Ｐ１００００	AA	DD	Screw(4×10)	ﾋﾞｽ			
12	ＱＥＡＲＰ００２０ＱＳＺＺ	AE	DJ	PS earth plate	PS ｱｰｽ板			
13	ＸＨＢＳ７３０Ｐ０８０００	AB	DD	Screw(3×8)	ﾋﾞｽ			
14	ＰＳＨＥＰ０８１０ＱＳＺＺ	AC	DD	PS follower guide sheet	PS 従動ｶﾞｲﾄﾞｼｰﾄ			
15	ＰＳＨＥＰ０８２０ＱＳＺＺ	AL	EB	PS paper exit sheet upper	PS 出紙ｼｰﾄ上			
16	ＬＨＬＤＺ０１８７ＱＳＺＺ	AC	DD	PS brake holder	PS ﾌﾞﾚｰｷﾎﾙﾀﾞｰ			
17	ＭＳＰＲＣ０５７７ＱＳＺＺ	AC	DD	PS brake spring	PS ﾌﾞﾚｰｷｽﾌﾟﾘﾝｸﾞ			
18	ＪＫＮＢＺ００１２ＱＳＺＺ	AE	DJ	PS JAM release knob	PS JAM 解除ﾉﾌﾞ			
19	ＬＸ－ＢＺ１１５２ＦＣＰＺ	AA	DD	Screw(3×6)	ﾋﾞｽ			
20	ＮＢＲＧＣ０３８７ＦＣＺ１	AC	DJ	Bearing	軸受			
21	ＮＧＥＲＨ１９６０ＦＣＺＺ	AH	DX	PS joint gear(16T)	PS 連結ｷﾞｱ			
22	ＮＲＯＬＲ０２１５ＱＳＺ３	AU	EZ	PS roller	PS ﾛｰﾗｰ			
23	ＸＲＥＳＰ７０－０８０００	AA	DD	E ring(E7)	E ﾘﾝｸﾞ			
24	ＮＢＲＧＣ０３１９ＦＣＺ１	AC	DJ	Bearing	軸受			
25	ＣＧｉＤＭ０２２０ＵＳ５１	AR	EQ	PS lower paper guide	PS 下ﾍﾟｰﾊﾟｰｶﾞｲﾄﾞ			
	(Unit)							
901	ＤＵＮＴ－１０９４ＵＳ１２	BH	HC	PS unit	PS ﾕﾆｯﾄ			

【H50】

PS ﾕﾆｯﾄ (PS unit)

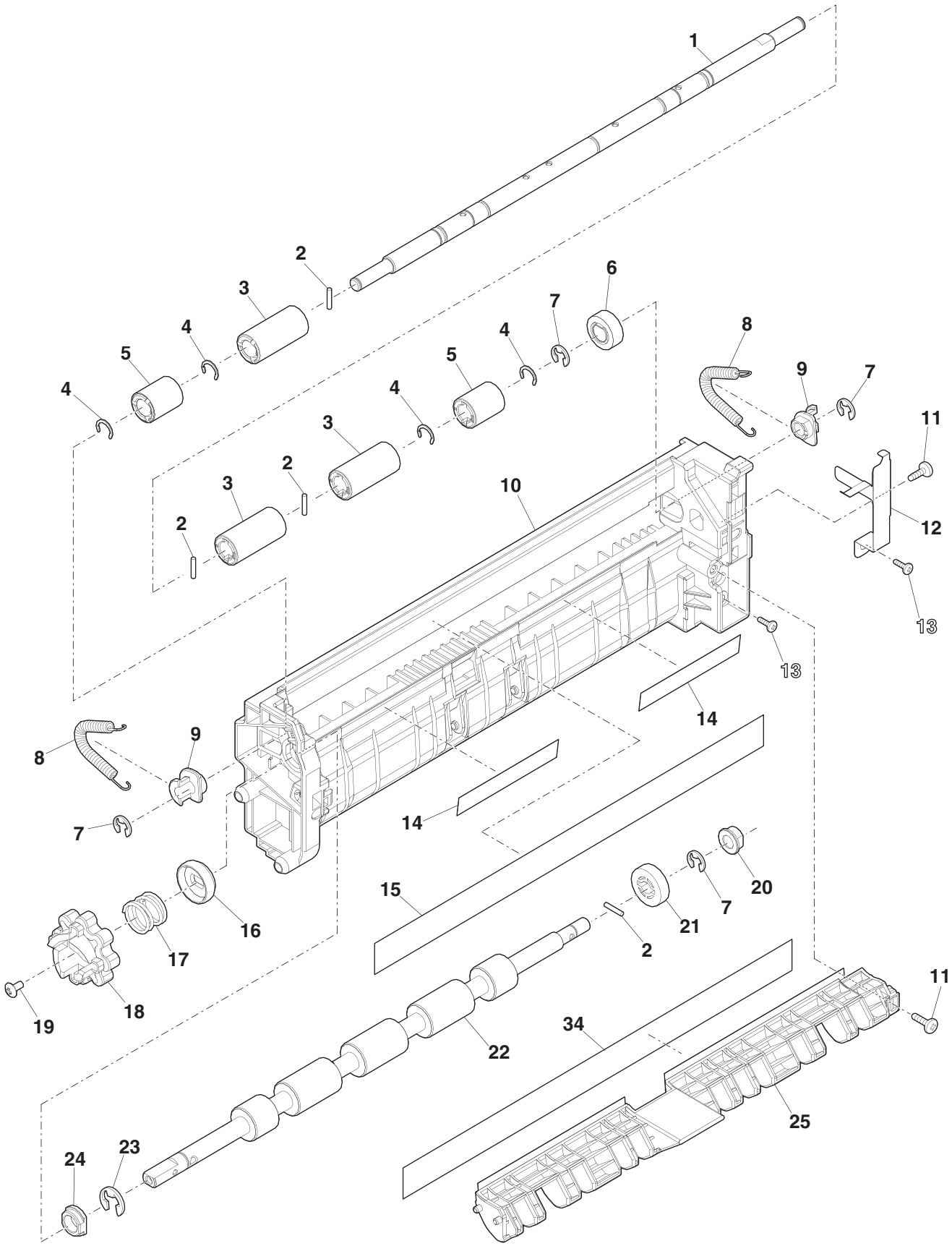

【L10】

1 次転写ｸﾘｰﾅｰﾕﾆｯﾄ (1st transfer cleaner unit)

NO.	PARTS CODE	PRICE RANK Ex.	PRICE RANK Ja.	DESCRIPTION		Inter-change	Reason for change	Effective time
1	ＸＲＥＳＰ４０－０６０００	AA	DD	E ring(E4)	Ｅﾘﾝｸﾞ			
2	ＮＧＥＲＨ０３１８ＱＳＺＺ	AL	EB	Cleaner gear	ｸﾘｰﾅｰｷﾞｱ			
3	ＮＢＲＧＰ０７４６ＦＣＺＺ	AQ	EQ	Cleaner bearing	ｸﾘｰﾅｰ軸受			
4	ＸＥＢＳ７３０Ｐ０８０００	AC	DD	Screw(3×8)	ﾋﾞｽ			
5	ＮＧＥＲＨ０３１７ＱＳＺＺ	AM	EG	Cleaner idle gear	ｸﾘｰﾅｰｱｲﾄﾞﾙｷﾞｱ			
6	ＮＳＲＷ－０００８ＱＳＺＺ	AW	FG	Transfer waste toner screw	転写廃ﾄﾅｰｽｸﾘｭｰ			
7	ＰＳＥＬ－０１９８ＱＳＺ３	AP	EQ	Transfer side seal R	転写ｻｲﾄﾞｼｰﾙ R			
8	ＰＭＬＴ－１９５０ＦＣＺＺ	AE	DJ	Cleaner cushion	ｸﾘｰﾅｰｸｯｼｮﾝ			
9	ＬＦＲＭ－０１２７ＱＳＺ３	AX	FG	Transfer CL frame	転写 CL ﾌﾚｰﾑ			
10	ＰＳＥＬ－０１９７ＱＳＺ３	AP	EQ	Transfer side seal F	転写ｻｲﾄﾞｼｰﾙ F			
11	ＰＭＬＴ－０２１９ＱＳＺＺ	AL	EB	Cleaner pipe cushion	ｸﾘｰﾅｰﾊﾟｲﾌﾟﾓﾙﾄ			
12	ＭＳＰＲＣ０４９３ＱＳＺＺ	AL	EB	Shutter spring	ｼｬｯﾀｰｽﾌﾟﾘﾝｸﾞ			
13	ＰＳＨＴ－００１７ＱＳＺ２	AM	EG	DR pipe shutter	DR ﾊﾟｲﾌﾟｼｬｯﾀｰ			
14	ＰＰｉＰＰ００１９ＱＳＺ２	AM	EG	Transfer toner pipe	転写廃ﾄﾅｰﾊﾟｲﾌﾟ			
15	ＰＳＨＥＺ０７７５ＱＳＺＺ	AQ	EQ	Transfer sub blade	転写ｻﾌﾞﾌﾞﾚｰﾄﾞ			
16	ＰＭＬＴ－０２０１ＱＳＺ１	AQ	EQ	Transfer CL blade cushion	転写 CL ﾌﾞﾚｰﾄﾞﾓﾙﾄ			
17	ＣＣＬＥＺ００２６ＵＳ５１	AY	FQ	Transfer CL blade	転写 CL ﾌﾞﾚｰﾄﾞ			
	(Unit)							
901	ＣＦＲＭ－０１２７ＵＳ５１	BD	GN	1st transfer cleaner unit	１次転写ｸﾘｰﾅｰﾕﾆｯﾄ			

【L10】

1 次転写ｸﾘｰﾅｰﾕﾆｯﾄ (1st transfer cleaner unit)

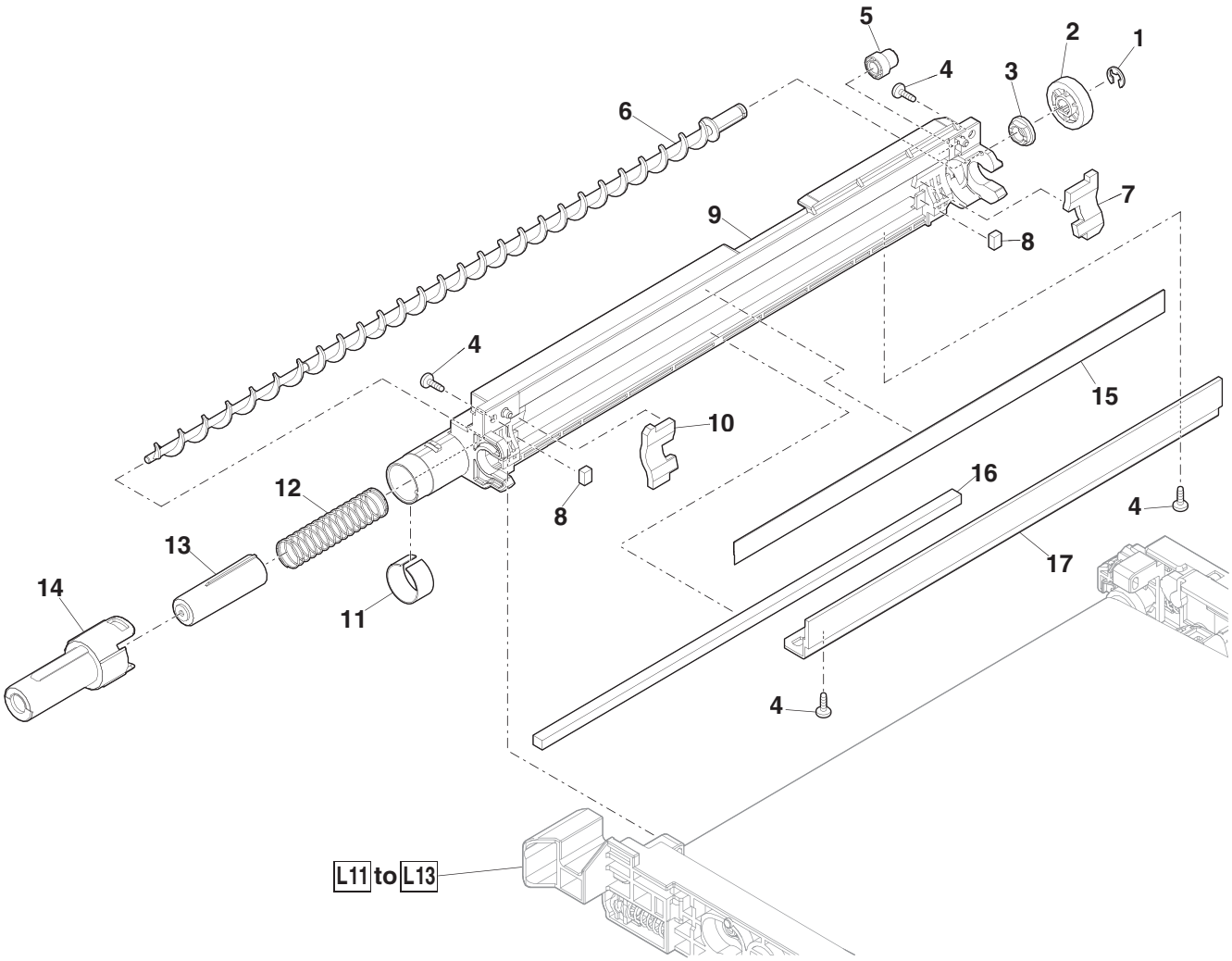

【L11】

1 次転写ﾕﾆｯﾄ 1(1st transfer cleaner unit 1)

NO.	PARTS CODE	PRICE RANK Ex.	PRICE RANK Ja.	DESCRIPTION		Inter-change	Reason for change	Effective time
1	ＸＢＰＳ７３０Ｐ０６ＫＳ０	AB	DD	Screw(3×6KS)	ﾋﾞｽ			
2	ＮＣＰＬ－００２６ＱＳＺＺ	AM	EG	Separate coupling	離接ｶｯﾌﾟﾘﾝｸﾞ			
3	ＸＥＢＳ７３０Ｐ０８０００	AC	DD	Screw(3×8)	ﾋﾞｽ			
4	ＮＧＥＲＨ０２５３ＱＳＺＺ	AD	DJ	Gear(20-27T)	ｷﾞｱ			
5	ＮＧＥＲＨ０３９１ＱＳＺＺ	AM	EG	Separate idle gear	離接ｱｲﾄﾞﾙｷﾞｱ			
6	ＸＲＥＳＰ５０－０６０００	AA	DD	E ring(E5)	Ｅﾘﾝｸﾞ			
7	ＸＲＥＳＰ３０－０４０００	AA	DD	E ring(E3)	Ｅﾘﾝｸﾞ			
8	ＮＧＥＲＨ１０００ＦＣＺ１	AC	DJ	Churning gear	攪拌ｷﾞｱ			
9	ＱＳＬＰ－００２８ＱＳＺ１	AN	EG	2nd transfer high voltage electrode plate	２次転写高圧電極板			
10	ＣＰＬＴＭ０６７６ＱＳ０１	AX	FG	Separate gear plate	離接ｷﾞｱﾌﾟﾚｰﾄ			
11	ＬＦＲＭ－０１２６ＱＳＺ１	AX	FG	Transfer frame R	転写ﾌﾚｰﾑ R			
12	ＭＳＰＲＤ０５６３ＱＳＺＺ	AT	EZ	Transfer CL high voltage electrode plate	転写 CL 高圧電極			
13	ＬＰＬＴＭ０６９３ＱＳＺＺ	AT	EZ	1st transfer reinforce plate	１次転写補強板			
14	ＭＬＮＫＰ０００４ＱＳＺＺ	AR	EQ	Transfer link CL A R	転写ﾘﾝｸ CL Ａ R			
15	ＬＸ－ＢＺ１１２３ＦＣＰＺ	AB	DD	Link fixing screw	ﾘﾝｸ取付ﾋﾞｽ			
16	ＭＬＮＫＰ０００８ＱＳＺＺ	AM	EG	Transfer link CL B R	転写ﾘﾝｸ CL Ｂ R			
17	ＭＬＮＫＰ０００３ＱＳＺＺ	AQ	EQ	Transfer link CL A F	転写ﾘﾝｸ CL Ａ F			
18	ＬＦＲＭ－０１２５ＱＳＺ２	AY	FQ	Transfer frame F	転写ﾌﾚｰﾑ F			
19	ＭＳＰＲＣ０４９９ＱＳＺＺ	AL	EB	Tension roller spring	ﾃﾝｼｮﾝﾛｰﾗｰｽﾌﾟﾘﾝｸﾞ			
20	ＮＢＲＧＰ００６４ＱＳＺ１	AM	EG	Tension roller bearing F	ﾃﾝｼｮﾝﾛｰﾗｰ軸受 F			
21	ＬＰＬＴＰ０６７０ＱＳＺ１	AM	EG	Transfer cam lock plate	転写ｶﾑﾛｯｸ板			
22	ＬＸ－ＢＺ１０３３ＦＣＺＺ	AA	DD	Transfer separate screw left	転写離接ﾋﾞｽ左			
23	ＬＰｉＮＳ０１６５ＦＣＺ１	AB	DD	Spring pin	ｽﾌﾟﾘﾝｸﾞﾋﾟﾝ			
24	ＭＣＡＭＰ０００９ＱＳＺＺ	AM	EG	Transfer cam R	転写ｶﾑ R			
25	ＭＬＮＫＭ０００６ＱＳＺＺ	AP	EQ	Transfer link BK R	転写ﾘﾝｸ BK Ｒ			
26	ＮＳＦＴＺ０１６５ＱＳＺＺ	AX	FG	Transfer cam shaft	転写ｶﾑｼｬﾌﾄ			
27	ＭＬＮＫＭ０００５ＱＳＺＺ	AN	EG	Transfer link BK F	転写ﾘﾝｸ BK Ｆ			
28	ＭＣＡＭＰ０００８ＱＳＺＺ	AM	EG	Transfer cam F	転写ｶﾑ F			
	(Unit)							
901	ＤＵＮＴ－１０９８ＵＳ１１	CB	TX	1st transfer unit [Include Block[L10],[L12],[L13]]	１次転写ﾕﾆｯﾄ			

【L11】

1 次転写ﾕﾆｯﾄ 1(1st transfer cleaner unit 1)

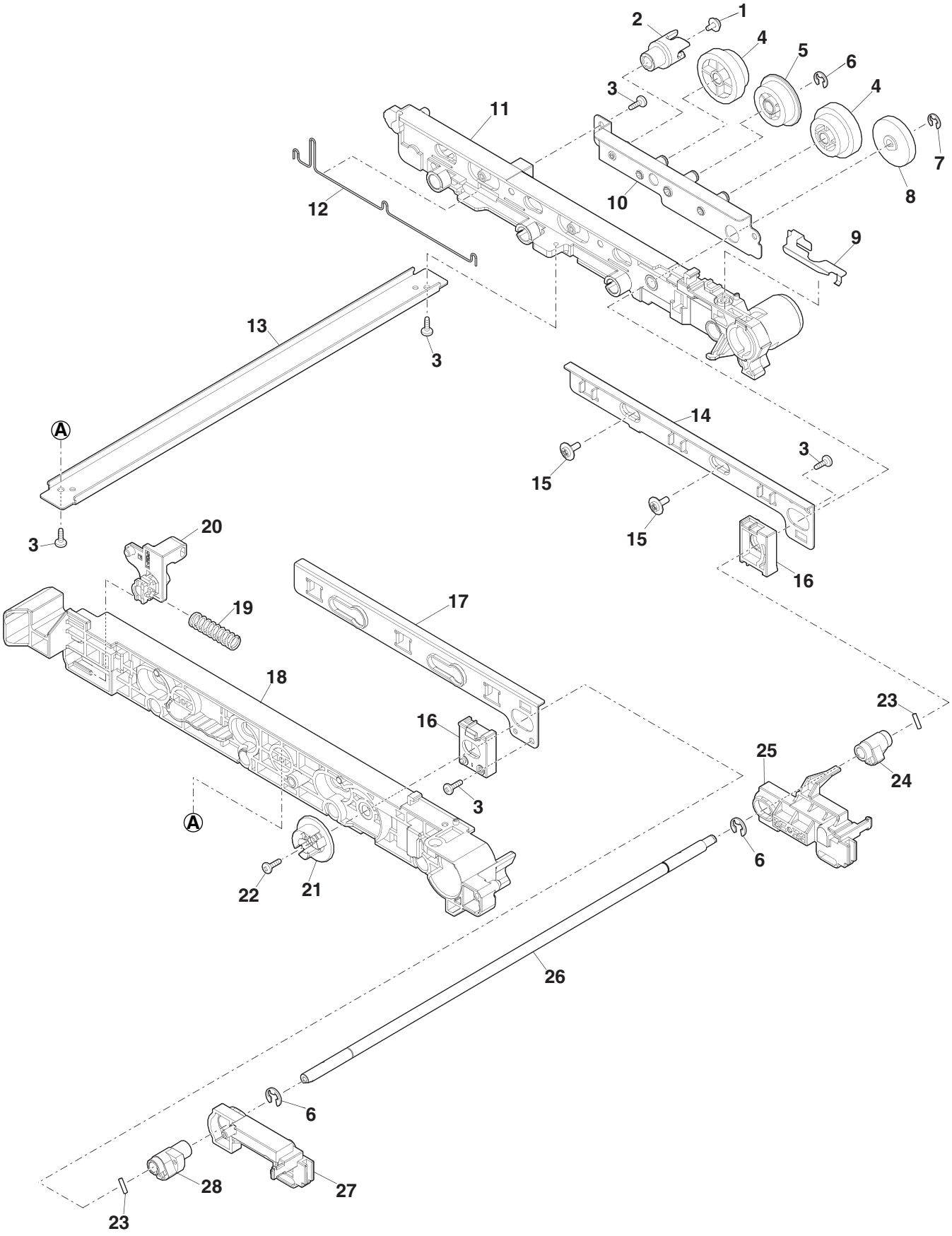

【L12】

1 次転写ﾕﾆｯﾄ 2(1st transfer cleaner unit 2)

NO.	PARTS CODE	PRICE RANK		DESCRIPTION		Inter-change	Reason for change	Effective time
		Ex.	Ja.					
1	ＭＡＲＭＰ００８２ＱＳＺ２	AN	EG	Transfer arm Y R	転写ｱｰﾑ YR			
2	ＭＳＰＲＣ０５５４ＱＳＺＺ	AM	EG	1st transfer high voltage spring CL R	１次転写高圧ｽﾌﾟﾘﾝｸﾞ CL R			
3	ＮＢＲＧＰ００７６ＱＳＺＺ	AM	EG	Transfer roller bearing R	転写ﾛｰﾗｰ軸受 R			
4	ＭＡＲＭＰ００８０ＱＳＺ２	AN	EG	Transfer arm CM R	転写ｱｰﾑ CM R			
5	ＭＡＲＭＰ００７８ＱＳＺ１	AM	EG	Transfer arm BK R	転写ｱｰﾑ BK R			
6	ＭＳＰＲＣ０５５３ＱＳＺＺ	AN	EG	1st transfer high voltage spring BK R	１次転写高圧ｽﾌﾟﾘﾝｸﾞ BK R			
7	ＸＲＥＳＰ３０－０４０００	AA	DD	E ring(E3)	Ｅﾘﾝｸﾞ			
8	ＮＲＯＬＭ０２３０ＱＳＺ１	AY	FQ	Y support roller	Ｙ補助ﾛｰﾗｰ			
9	ＮＲＯＬＲ０２３１ＱＳＡＺ	AZ	FX	1st transfer roller	１次転写ﾛｰﾗｰ			
10	ＭＡＲＭＰ００８１ＱＳＺ２	AN	EG	Transfer arm Y F	転写ｱｰﾑ Ｙ F			
11	ＭＳＰＲＣ４１１０ＦＣＺＺ	AC	DJ	1st transfer roller spring F	１次転写ﾛｰﾗｰｽﾌﾟﾘﾝｸﾞ F			
12	ＮＢＲＧＰ００７０ＱＳＺＺ	AL	EB	Transfer roller bearing F	転写ﾛｰﾗｰ軸受 F			
13	ＭＡＲＭＰ００７９ＱＳＺ１	AN	EG	Transfer arm CM F	転写ｱｰﾑ CM F			
14	ＭＡＲＭＰ００７７ＱＳＺ１	AM	EG	Transfer arm BK F	転写ｱｰﾑ BK F			
15	ＭＳＰＲＴ０５８１ＱＳＺＺ	AL	EB	Resist backup spring	ﾚｼﾞﾊﾞｯｸｱｯﾌﾟｽﾌﾟﾘﾝｸﾞ			
16	ＭＡＲＭＰ００８４ＱＳＺＺ	AM	EG	Resist backup arm R	ﾚｼﾞﾊﾞｯｸｱｯﾌﾟｱｰﾑ R			
17	ＮＲＯＬＭ０２０１ＱＳＺ１	AT	EZ	1st transfer roller	１次転写ﾛｰﾗｰ			
18	ＮＲＯＬＭ０２０３ＱＳＺ３	AW	FG	Transfer front roller	転写前ﾛｰﾗｰ			
19	ＭＡＲＭＰ００８５ＱＳＺＺ	AM	EG	Resist backup arm F	ﾚｼﾞﾊﾞｯｸｱｯﾌﾟｱｰﾑ F			

【L12】

1 次転写ﾕﾆｯﾄ 2(1st transfer cleaner unit 2)

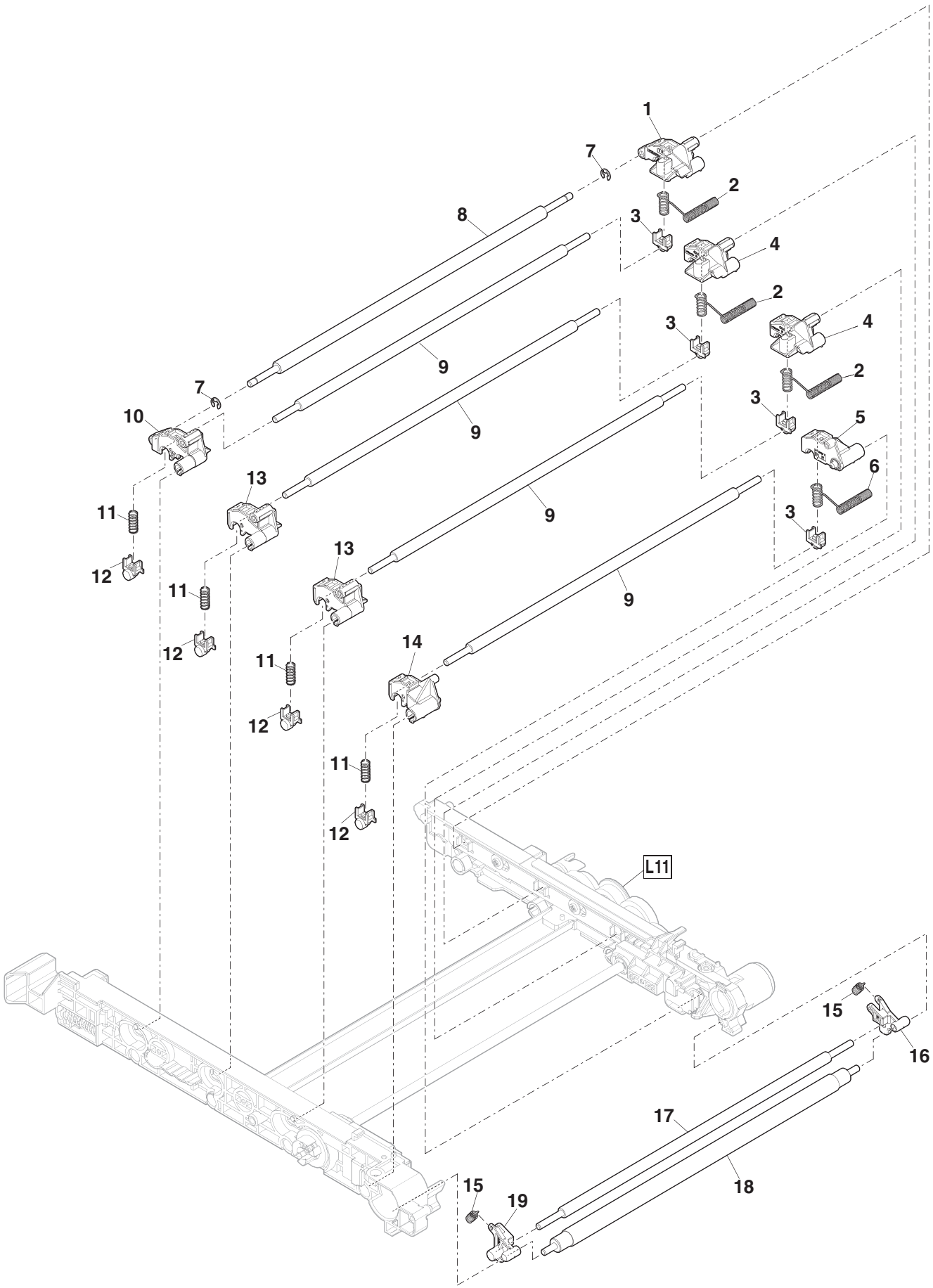

【L13】

1 次転写ﾕﾆｯﾄ 3(1st transfer cleaner unit 3)

NO.	PARTS CODE	PRICE RANK Ex.	PRICE RANK Ja.	DESCRIPTION		Inter-change	Reason for change	Effective time
1	ＸＥＢＳ７３０Ｐ０８０００	AC	DD	Screw(3×8)	ﾋﾞｽ			
2	ＬＨＬＤＺ０１８２ＱＳＺＺ	AM	EG	Tension roller bearing holder	ﾃﾝｼｮﾝﾛｰﾗｰ軸受ﾎﾙﾀﾞｰ			
3	ＭＳＰＲＣ０４９９ＱＳＺＺ	AL	EB	Tension roller spring	ﾃﾝｼｮﾝﾛｰﾗｰｽﾌﾟﾘﾝｸﾞ			
4	ＮＢＲＧＰ００７９ＱＳＺＺ	AN	EG	Tension roller bearing R	ﾃﾝｼｮﾝﾛｰﾗｰ軸受 R			
5	ＬＸ－ＷＺ０４７３ＦＣＺＺ	AA	DD	Poly slider(φ6.2-12 t0.25)	ﾎﾟﾘｽﾗｲﾀﾞｰ			
6	ＸＲＥＳＰ５０－０６０００	AA	DD	E ring(E5)	Ｅﾘﾝｸﾞ			
7	ＣＲＯＬＭ０２０２ＵＳ５２	AZ	FX	Transfer tension roller	転写ﾃﾝｼｮﾝﾛｰﾗｰ			
8	ＮＳＦＴＺ０１４６ＱＳＺＺ	AX	FG	Tension roller shaft	ﾃﾝｼｮﾝﾛｰﾗｰｼｬﾌﾄ			
9	ＣＢＬＴＨ００６２ＵＳ５２	BR	MJ	Transfer belt	転写ﾍﾞﾙﾄ			
10	ＬＰＬＴＭ０６９４ＱＳＺＺ	AW	FG	Transfer unit rail reinforce plate	転写ﾕﾆｯﾄﾚｰﾙ補強板			
11	ＬＨＬＤＺ０２１８ＱＳＺ１	AX	FG	Transfer unit rail holder	転写ﾕﾆｯﾄﾚｰﾙﾎﾙﾀﾞｰ			
12	ＪＨＮＤＰ０１６６ＦＣＺＺ	AC	DJ	DV handle	DV ﾊﾝﾄﾞﾙ			
13	ＬＸ－ＢＺ１０８２ＦＣＺＺ	AB	DD	Blue screw(3×8)	青ﾋﾞｽ			
14	ＮＧＥＲＨ２１０９ＦＣＺＺ	AE	DS	Belt drive gear	ﾍﾞﾙﾄ駆動ｷﾞｱ			
15	ＬＰｉＮＳ７０６２ＳＣＺＺ	AA	DD	Spring pin(φ3-16)	ｽﾌﾟﾘﾝｸﾞﾋﾟﾝ			
16	ＬＸ－ＷＺ０１９８ＦＣＺ１	AA	DD	Poly slider	ﾎﾟﾘｽﾗｲﾀﾞｰ			
17	ＮＢＲＧＰ００７７ＱＳＺ１	AN	EG	Drive roller bearing R	駆動ﾛｰﾗｰ軸受 R			
18	ＰＣＬＲ－００４２ＱＳＺ１	AN	EG	Drive roller collar R	駆動ﾛｰﾗｰｶﾗｰ R			
19	ＮＲＯＬＲ０２１０ＱＳＺＺ	BD	GN	Transfer drive roller	転写駆動ﾛｰﾗｰ			
20	ＰＣＬＲ－００４２ＱＳＺＺ	AN	EG	Drive roller collar F	駆動ﾛｰﾗｰｶﾗｰ F			
21	ＬＸ－ＢＺ１０３３ＦＣＺＺ	AA	DD	Transfer separate screw left	転写離接ﾋﾞｽ左			
22	ＮＢＲＧＰ０７４４ＦＣＺＺ	AB	DJ	Insulate bearing	絶縁軸受			
23	ＬＸ－ＷＺ０４２１ＦＣＺＺ	AA	DD	Washer(8-12)	ﾜｯｼｬｰ			
24	ＸＲＥＳＰ７０－０８０００	AA	DD	E ring(E7)	Ｅﾘﾝｸﾞ			

【L13】

1 次転写ﾕﾆｯﾄ 3(1st transfer cleaner unit 3)

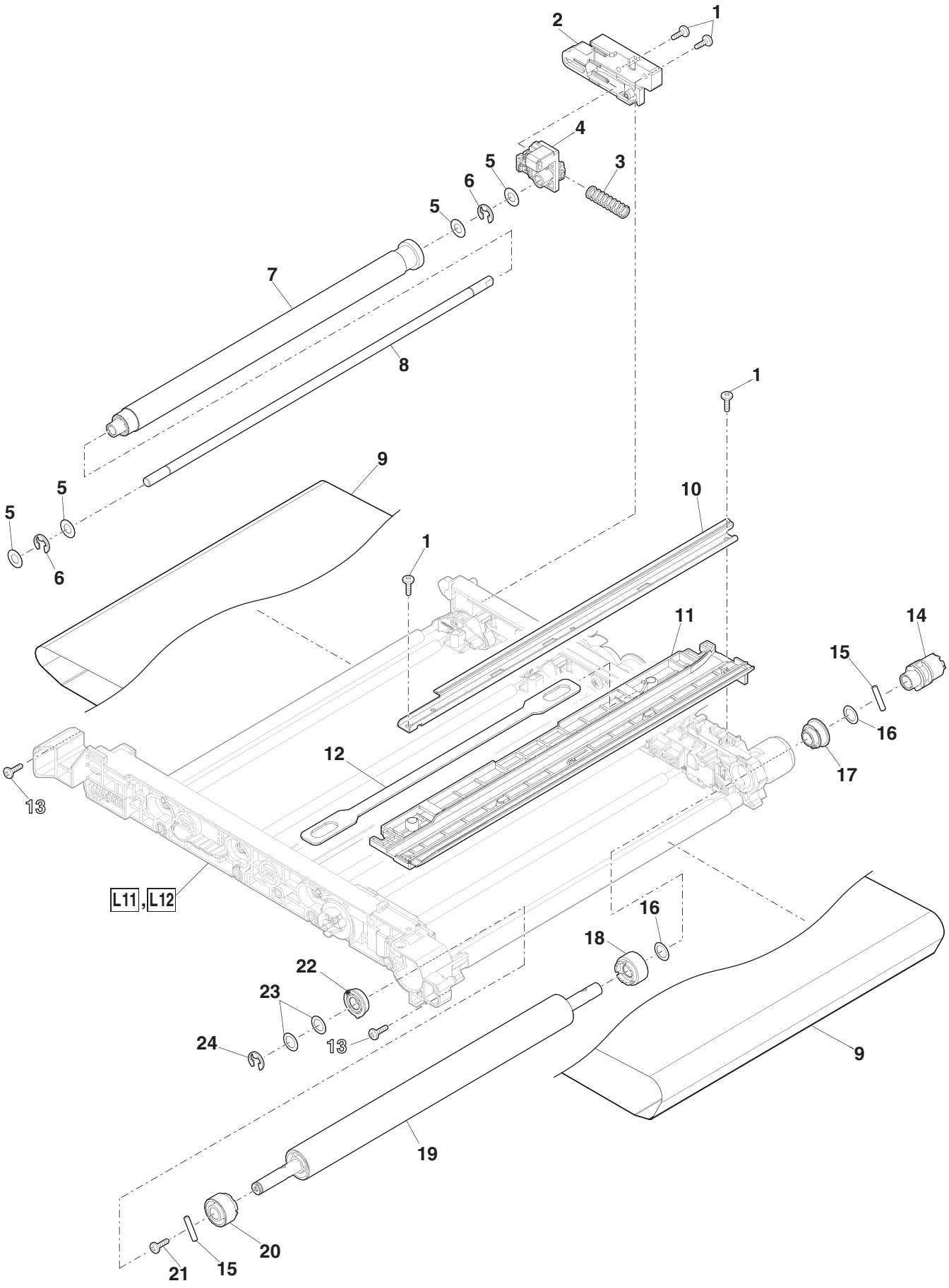

【L30】

2 次転写ﾕﾆｯﾄ (2nd transfer unit)

NO.	PARTS CODE	PRICE RANK Ex.	PRICE RANK Ja.	DESCRIPTION		Inter-change	Reason for change	Effective time
1	ＮＲＯＬＲ０２１１ＱＳＺ１	AY	FQ	2nd transfer roller	2 次転写ﾛｰﾗｰ			
2	ＸＲＥＳＰ４０－０６０００	AA	DD	E ring(E4)	E ﾘﾝｸﾞ			
3	ＰＣＬＲ－００２３ＱＳＺＺ	AC	DD	2nd transfer roller collar	2 次転写ﾛｰﾗｰｶﾗｰ			
4	ＮＢＲＧＰ００７２ＱＳＡ１	AD	DJ	2nd transfer roller shaft bearing R	2 次転写ﾛｰﾗｰ軸受 R			
5	ＱＥＡＲＰ００２２ＱＳＺ１	AD	DJ	2nd transfer earth plate	2 次転写ｱｰｽ板			
6	ＰＳＨＥＺ０８２１ＱＳＺＺ	AE	DS	Transfer front guide sheet	転写前ｶﾞｲﾄﾞｼｰﾄ			
7	ＬＦＲＭ－０１５２ＱＳＺ２	AL	EB	2nd transfer frame	2 次転写ﾌﾚｰﾑ			
8	ＮＢＲＧＰ００７２ＱＳＺ１	AC	DD	2nd transfer roller shaft bearing F	2 次転写ﾛｰﾗｰ軸受 F			
9	ＬＨＬＤＺ０１８４ＱＳＺ１	AF	DS	Separate electrode holder	剥離電極ﾎﾙﾀﾞｰ			
10	ＬＰＬＴＭ０６３１ＱＳＺＺ	AK	DX	2nd transfer separate electrode plate	2 次転写剥離電極板			
11	ＱＥＡＲＰ００２３ＱＳＺ２	AC	DD	2nd transfer separate earth plate	2 次転写剥離ｱｰｽ板			
12	ＭＳＰＲＤ０５２７ＱＳＺＺ	AD	DJ	2nd transfer earth spring	2 次転写ｱｰｽｽﾌﾟﾘﾝｸﾞ			
13	ＭＳＰＲＣ０５００ＱＳＺＺ	AC	DD	2nd transfer roller spring	2 次転写ﾛｰﾗｰｽﾌﾟﾘﾝｸﾞ			
14	ＬＨＬＤＺ０２２０ＱＳＺ２	AN	EQ	2nd transfer frame regulation holder	2 次転写ﾌﾚｰﾑ規制ﾎﾙﾀﾞｰ			
15	ＬＸ－ＢＺ１０５２ＦＣＺＺ	AC	DD	CRUM connector screw	CRUM ｺﾈｸﾀｰﾋﾞｽ			
16	ＭＳＰＲＴ０５８２ＱＳＺ１	AC	DD	2nd transfer unit control spring	2 次転写ﾕﾆｯﾄ規制ｽﾌﾟﾘﾝｸﾞ			
	(Unit)							
901	ＤＵＮＴ－１０８８ＵＳＺＺ	BA	FX	2nd transfer unit	2 次転写ﾕﾆｯﾄ			

【L30】
2 次転写ﾕﾆｯﾄ (2nd transfer unit)

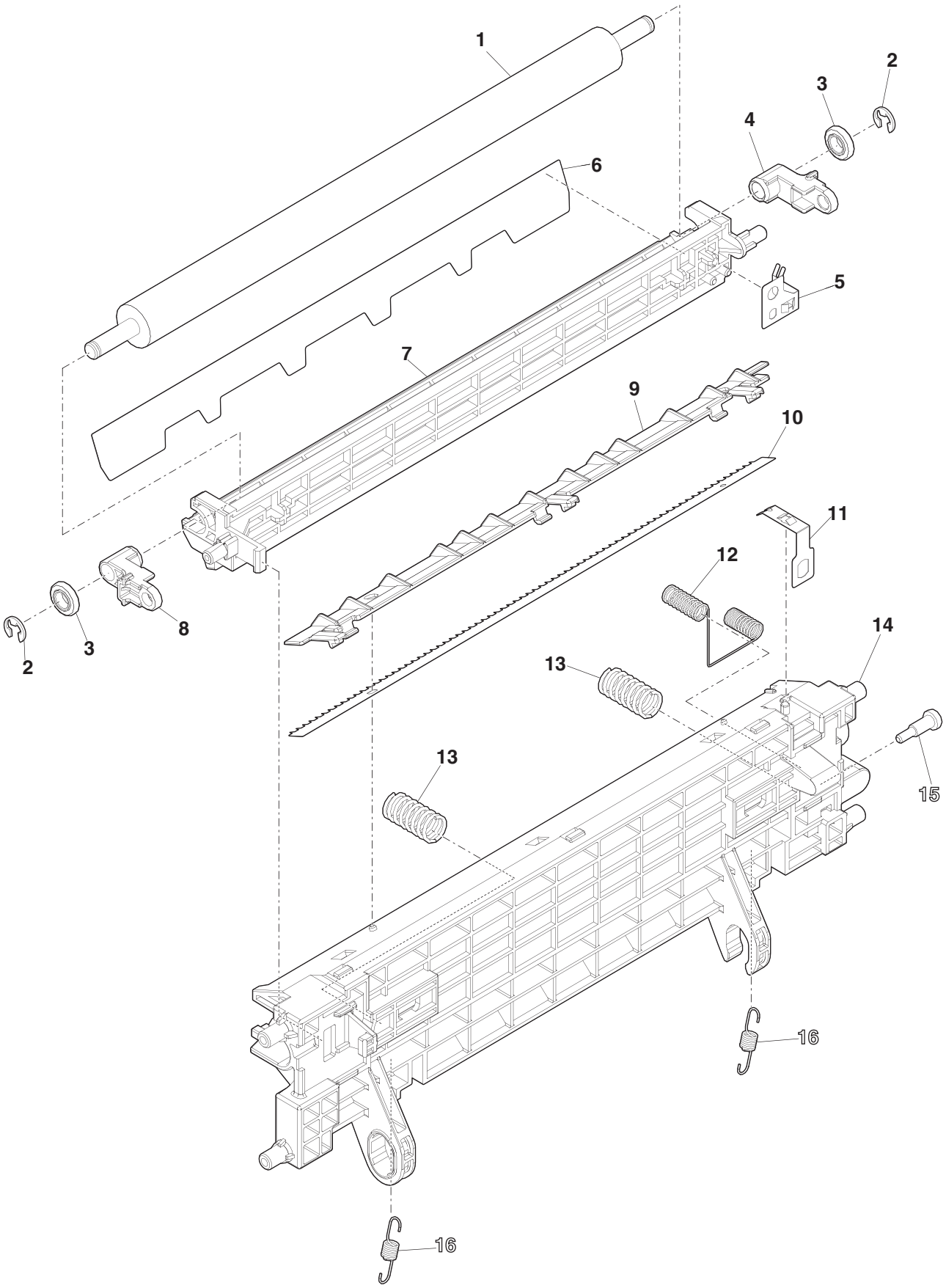

【L50】
ﾚｼﾞｾﾝｻｰﾕﾆｯﾄ (Resist sensor unit)

NO.	PARTS CODE	PRICE RANK Ex.	PRICE RANK Ja.	DESCRIPTION		Inter-change	Reason for change	Effective time
1	MSPRD0532QSZZ	AC	DD	Resist shutter movable spring	ﾚｼﾞｼｬｯﾀｰ可動ｽﾌﾟﾘﾝｸﾞ			
2	LPLTP0653QSZZ	AG	DX	Resist shutter movable plate	ﾚｼﾞｼｬｯﾀｰ可動板			
3	RPLU-0043QSZZ	AN	EG	Solenoid	ｿﾚﾉｲﾄﾞ			
4	XEBS730P08000	AC	DD	Screw(3×8)	ﾋﾞｽ			
5	VHPYAHA28++-1	AX	FG	Photo sensor	ﾌｫﾄｾﾝｻｰ			
6	LDAiU0052QSZ1	AL	EB	Resist base plate	ﾚｼﾞ台板			
7	XBPS730P04000	AA	DD	Screw(3×4)	ﾋﾞｽ			
8	PSHEZ0813QSZZ	AC	DD	Resist solenoid protect sheet	ﾚｼﾞｿﾚﾉｲﾄﾞ保護ｼｰﾄ			
9	LPLTM0686QSZZ	AH	DX	Resist base plate reinforce plate	ﾚｼﾞ台板補強板			
	(Unit)							
901	DUNT-1099US11	BK	HG	Resist sensor unit	ﾚｼﾞｾﾝｻｰﾕﾆｯﾄ			

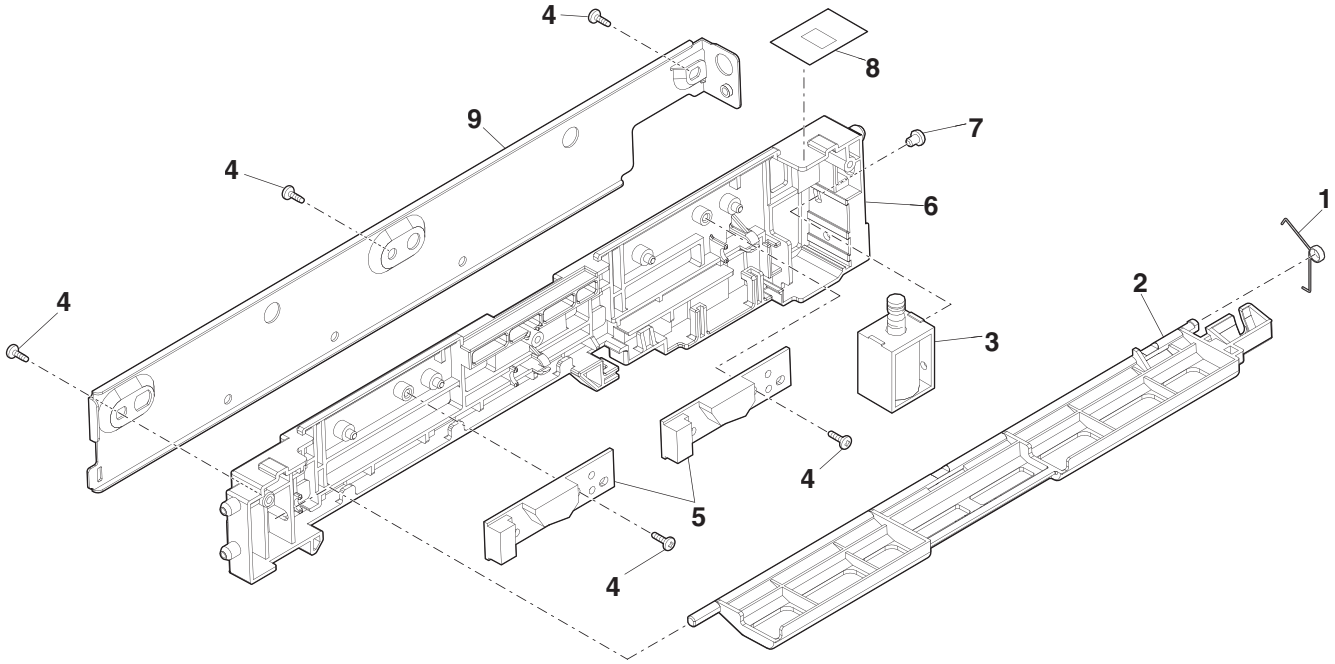

【N10】

定着ﾕﾆｯﾄ 1(Fusing unit 1)

NO.	PARTS CODE	PRICE RANK Ex.	PRICE RANK Ja.	DESCRIPTION		Inter-change	Reason for change	Effective time
1	NRŌLi0235QSAZ	BN	HZ	Fusing roller	定着ﾛｰﾗｰ			
2	LHLDZ0355QSZZ	AS	EZ	Fusing lamp holder R	定着ﾗﾝﾌﾟﾎﾙﾀﾞｰR			
3	XEBS730P12000	AC	DD	Screw(3×12)	ﾋﾞｽ			
4	LSTPF0172FCZ1	AA	DD	Roller stopper P	ﾛｰﾗｰｽﾄｯﾊﾟｰP			
5	LBSHZ0011QSZZ	AY	FQ	Insulation bush	断熱ﾌﾞｯｼｭ			
6	NBRGY0082QSZZ	AU	EZ	Heat roller bearing	ﾋｰﾄﾛｰﾗｰﾍﾞｱﾘﾝｸﾞ			
7	LFRM-0123QSZ4	BB	GD	Fusing upper frame	定着上ﾌﾚｰﾑ			
⚠ 8	RDTCT0032QSZZ	BB	GD	Non-contact thermistor	非接触ｻｰﾐｽﾀ			
9	PCŌVP2423FCZZ	AD	DJ	Thermistor cover	ｻｰﾐｽﾀｰｶﾊﾞｰ			
10	RDTCT0035QSZZ	AT	EZ	Upper HL thermistor sub	上 HL ｻｰﾐｽﾀｻﾌﾞ			
11	PSHEZ0789QSZ1	AM	EG	Fusing earth sheet	定着ｱｰｽｼｰﾄ			
12	RTHM-0012QSZZ	AU	EZ	Thermostat	ｻｰﾓｽﾀｯﾄ			
13	NGERH0619QSZZ	BF	GN	Fusing drive gear(43T)	定着駆動ｷﾞｱ			
14 ♣	RLMPU0065QSZZ	BH	GX	Heater lamp	ﾋｰﾀｰﾗﾝﾌﾟ			
	RLMPU0066QSZZ	BH	GX	Heater lamp	ﾋｰﾀｰﾗﾝﾌﾟ			
	RLMPU0067QSZZ	BH	GX	Heater lamp	ﾋｰﾀｰﾗﾝﾌﾟ			
15	LHLDZ0410QSZZ	AS	EQ	Fusing lamp holder F	定着ﾗﾝﾌﾟﾎﾙﾀﾞｰF			
16	PSHEZ0828QSZZ	AQ	EQ	Fusing paper enter PG paper pass support sheet	定着入紙 PG 通紙補助ｼｰﾄ			
17	PGiDH0203QSZZ	AU	EZ	Fusing paper enter paper guide	定着入紙ﾍﾟｰﾊﾟｰｶﾞｲﾄﾞ			
18	LX-BZ0109QSZZ	AD	DJ	Step screw	段ﾋﾞｽ			
19	LX-BZ0980FCPZ	AA	DD	Blue screw(3×12)	青ﾋﾞｽ			
20	PFLT-0005QSZZ	AN	EQ	Fusing cleaning pad	定着ｸﾘｰﾆﾝｸﾞﾊﾟｯﾄﾞ			
	(Unit)							
901 ♣	DUNTW1488US11	CC	UB	Fusing unit	定着ﾕﾆｯﾄ			
	DUNTW1488US12	CC	UB	Fusing unit	定着ﾕﾆｯﾄ			
	DUNTW1488USZZ	CC	UB	Fusing unit	定着ﾕﾆｯﾄ			

Matrix

No.14	ﾋｰﾀｰﾗﾝﾌﾟ (Heater lamp)		
PARTS CODE	Americas	Europe	Japan
RLMPU0065QSZZ			1st Lot
RLMPU0066QSZZ	1st Lot		
RLMPU0067QSZZ		1st Lot	

No.901	定着ﾕﾆｯﾄ (Fusing unit)		
PARTS CODE	Americas	Europe	Japan
DUNTW1488US11	1st Lot		
DUNTW1488US12		1st Lot	
DUNTW1488USZZ			1st Lot

【N10】

定着ﾕﾆｯﾄ 1(Fusing unit 1)

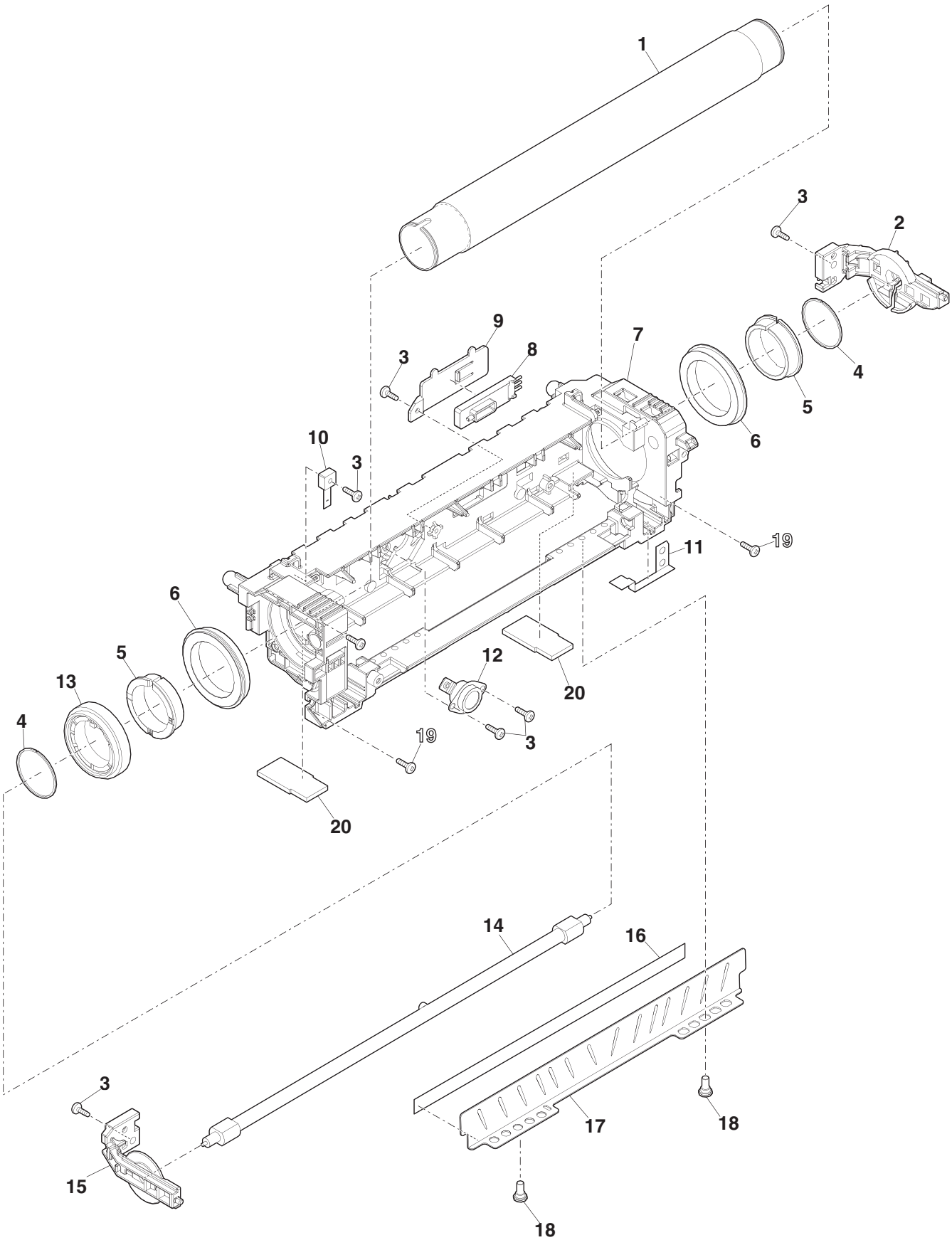

【N11】

定着ﾕﾆｯﾄ 2(Fusing unit 2)

NO.	PARTS CODE	PRICE RANK Ex.	PRICE RANK Ja.	DESCRIPTION		Inter-change	Reason for change	Effective time
1	ＬＨＬＤＺ０３６０ＱＳＺＺ	AP	EQ	connector holder	ｺﾈｸﾀﾎﾙﾀﾞｰ			
2	ＬＸ－ＢＺ１１８１ＦＣＺＺ	AB	DD	Screw(3×6)	ﾋﾞｽ			
3	ＸＥＢＳ７３０Ｐ１２０００	AC	DD	Screw(3×12)	ﾋﾞｽ			
4	ＭＳＰＲＣ４５５７ＱＳＺＺ	AM	EG	Fusing earth spring	定着ｱｰｽｽﾌﾟﾘﾝｸﾞ			
5	ＸＷＨＳ７３０－０５０８０	AA	DD	Washer(φ3-8)	ﾜｯｼｬｰ			
6	ＬＨＬＤＺ０３６１ＱＳＺＺ	AP	EQ	connector holder	ｺﾈｸﾀﾎﾙﾀﾞｰ			
7	ＣＰＬＴＭ１０５６ＱＳ０１	BC	GJ	Fusing rear upper separate plate	定着後上剥離板			
8	ＬＨＬＤＺ０３５６ＱＳＺＺ	AT	EZ	Fusing separate plate holder R	定着剥離板ﾎﾙﾀﾞｰ R			
9	ＭＳＰＲＴ４５１３ＱＳＺＺ	AL	EB	Fusing separate plate spring	定着剥離板ｽﾌﾟﾘﾝｸﾞ			
10	ＬＨＬＤＺ０３５７ＱＳＺＺ	AT	EZ	Fusing separate plate holder F	定着剥離板ﾎﾙﾀﾞｰ F			
11	ＸＢＰＳ７４０Ｐ０８ＫＳ０	AB	DD	Screw(4×8KS)	ﾋﾞｽ			
12	ＬＢＯ̄ＳＺ０３７９ＱＳＺＺ	AP	EQ	Pressure lever boss R	加圧ﾚﾊﾞｰﾎﾞｽ R			
13	ＭＳＰＲＣ０４９２ＱＳＺＺ	AL	EB	Pressure sub spring	加圧補助ｽﾌﾟﾘﾝｸﾞ			
14	ＭＬＥＶＰ０２４５ＱＳＺＺ	AT	EZ	Pressure lever R	加圧ﾚﾊﾞｰ R			
15	ＮＢＲＧＹ０９８４ＦＣＺＺ	AL	EB	Fusing roller bearing(φ8-16)	定着ﾛｰﾗｰﾍﾞｱﾘﾝｸﾞ			
16	ＮＲＯ̄Ｌｉ０２９７ＱＳＺＺ	BD	GN	Pressure roller	加圧ﾛｰﾗｰ			
17	ＭＬＥＶＰ０２４４ＱＳＺＺ	AT	EZ	Pressure lever F	加圧ﾚﾊﾞｰ F			
18	ＬＢＯ̄ＳＺ０３７８ＱＳＺＺ	AP	EQ	Pressure lever boss F	加圧ﾚﾊﾞｰﾎﾞｽ F			
19	ＭＬＥＶＰ０２４３ＱＳＺＺ	AP	EQ	Pressure release lever	圧解ﾚﾊﾞｰ			
20	ＭＳＰＲＴ４５１２ＱＳＺＺ	AM	EG	Fusing pressure spring	定着加圧ｽﾌﾟﾘﾝｸﾞ			
21	ＰＧｉＤＭ０２１５ＱＳＺ５			Rear lower paper guide	後下ﾍﾟｰﾊﾟｰｶﾞｲﾄﾞ			
22	ＰＴＭＥ－０３２８ＦＣＺＺ	AK	DX	Fusing lower PG pawl	定着下 PG 爪			
23	ＭＳＰＲＤ０７８３ＱＳＺＺ			Rear lower paper guide return spring	後下ﾍﾟｰﾊﾟｰｶﾞｲﾄﾞ復帰ｽﾌﾟﾘﾝｸﾞ			
24	ＴＬＡＢＨ０９６６ＱＳＡＺ	AC	DD	Envelope instruction label	封筒指示ﾗﾍﾞﾙ			
25	ＴＬＡＢＨ０６８５ＱＳＺＺ	AD	DJ	High temperature caution label	高温注意ﾗﾍﾞﾙ			
26	ＴＬＡＢＨ０２８９ＱＳＺＺ	AA	DJ	Fusing green label	定着ｸﾞﾘｰﾝﾗﾍﾞﾙ			

【N11】
定着ﾕﾆｯﾄ 2(Fusing unit 2)

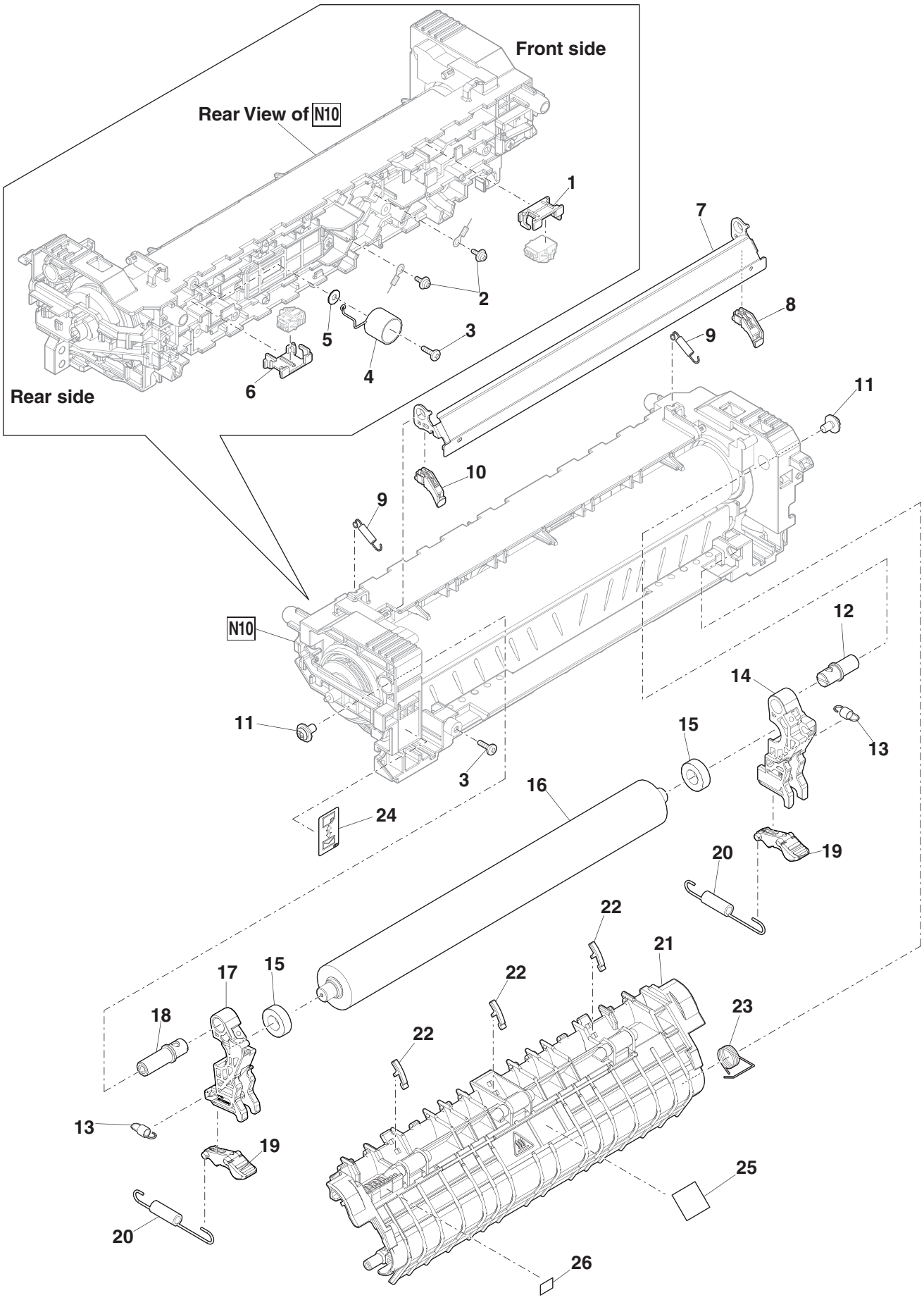

【P10】

排紙ﾕﾆｯﾄ (Delivery unit)

NO.	PARTS CODE	PRICE RANK Ex.	PRICE RANK Ja.	DESCRIPTION		Inter-change	Reason for change	Effective time
1	ＭＬＥＶＰ０１６１ＱＳＢＺ	AD	DJ	Fusing rear actuator	定着後ｱｸﾁｭｴｰﾀｰ			
2	ＶＨＰＳＧ２Ａ２４１＋－１	AG	DX	Photo sensor(SG2A241)	ﾌｫﾄｾﾝｻｰ			
3	ＭＬＥＶＰ０１６２ＱＳＡＺ	AE	DS	Full detect lever	満載検知ﾚﾊﾞｰ			
4	ＭＬＥＶＰ０１７５ＱＳＺ２	AD	DJ	Full detect actuator	満杯検知ｱｸﾁｭｴｰﾀｰ			
5	ＬＦｉＸ－０６２７ＦＣＺ１	AD	DJ	Paper fixing arm	用紙押えｱｰﾑ			
6	ＸＥＢＳ７４０Ｐ１００００	AA	DD	Screw(4×10)	ﾋﾞｽ			
7	ＰＧｉＤＭ０２２７ＱＳＺ５	AU	EZ	Delivery upper paper guide	排紙上ﾍﾟｰﾊﾟｰｶﾞｲﾄﾞ			
8	ＮＢＲＧＰ０８９７ＦＣＺ１	AH	DX	ADU bearing	ADU 軸受			
9	ＮＲＯＬＲ０２１６ＱＳＺＺ	AP	EQ	Delivery roller	排紙ﾛｰﾗｰ			
10	ＰＭＬＴ－０２４６ＱＳＺＺ	AC	DD	Delivery upper damper cushion	排紙上消音ﾓﾙﾄ			
11	ＰＳＨＥＺ０８２７ＱＳＺＺ	AB	DD	Reverse gate sheet	反転ｹﾞｰﾄｼｰﾄ			
12	ＰＧｉＤＭ０２２９ＱＳＺ１	AN	EQ	Reverse gate	反転ｹﾞｰﾄ			
13	ＮＧＥＲＨ０３５１ＱＳＺＺ	AD	DJ	Delivery Middle gear(23T)	排紙中間ｷﾞｱ			
14	ＮＧＥＲＨ０３４９ＱＳＺＺ	AD	DJ	Delivery gear(18T)	排紙ｷﾞｱ			
15	ＮＲＯＬＰ０２３４ＱＳＺＺ	AE	DJ	Delivery follower roller	排紙従動ﾛｰﾗｰ			
16	ＰＳＰＯ－００３５ＱＳＺＺ	AF	DS	Delivery sponge	蹴り出しｽﾎﾟﾝｼﾞ			
17	ＰＣＬＲ－０５０１ＦＣＺＺ	AB	DJ	Delivery guide collar	排紙ｶﾞｲﾄﾞｺﾛ			
18	ＰＧｉＤＭ０２２８ＱＳＺ４	AQ	EQ	Delivery lower paper guide	排紙下ﾍﾟｰﾊﾟｰｶﾞｲﾄﾞ			
19	ＭＳＰＲＤ０５３３ＱＳＺ１	AC	DD	Delivery follower spring	排紙従動ｽﾌﾟﾘﾝｸﾞ			
20	ＰＢＲＳＳ００４１ＱＳＺＺ	AG	DX	Fusing rear discharge brush	定着後除電ﾌﾞﾗｼ			
21	ＰＳＨＥＰ１１１２ＱＳＺＺ			Delivery rib mylar R	排紙ﾘﾌﾞﾏｲﾗｰ R			
22	ＰＳＨＥＰ１１１３ＱＳＺＺ			Delivery rib mylar F	排紙ﾘﾌﾞﾏｲﾗｰ F			
23	ＰＳＨＥＰ１１１５ＱＳＺＺ	AR	EQ	Reverse gate under sheet	反転ｹﾞｰﾄｱﾝﾀﾞｰｼｰﾄ			
501	ＣＧｉＤＭ０２２７ＵＳ５２	BF	GN	Delivery upper paper guide	排紙上ﾍﾟｰﾊﾟｰｶﾞｲﾄﾞ			
502	ＣＧｉＤＭ０２２８ＵＳ５２	AX	FG	Delivery lower paper guide	排紙下ﾍﾟｰﾊﾟｰｶﾞｲﾄﾞ			
	(Unit)							
901	ＤＵＮＴ－１０８６ＵＳ１２	BK	HC	Delivery unit	排紙ﾕﾆｯﾄ			

【P10】
排紙ﾕﾆｯﾄ (Delivery unit)

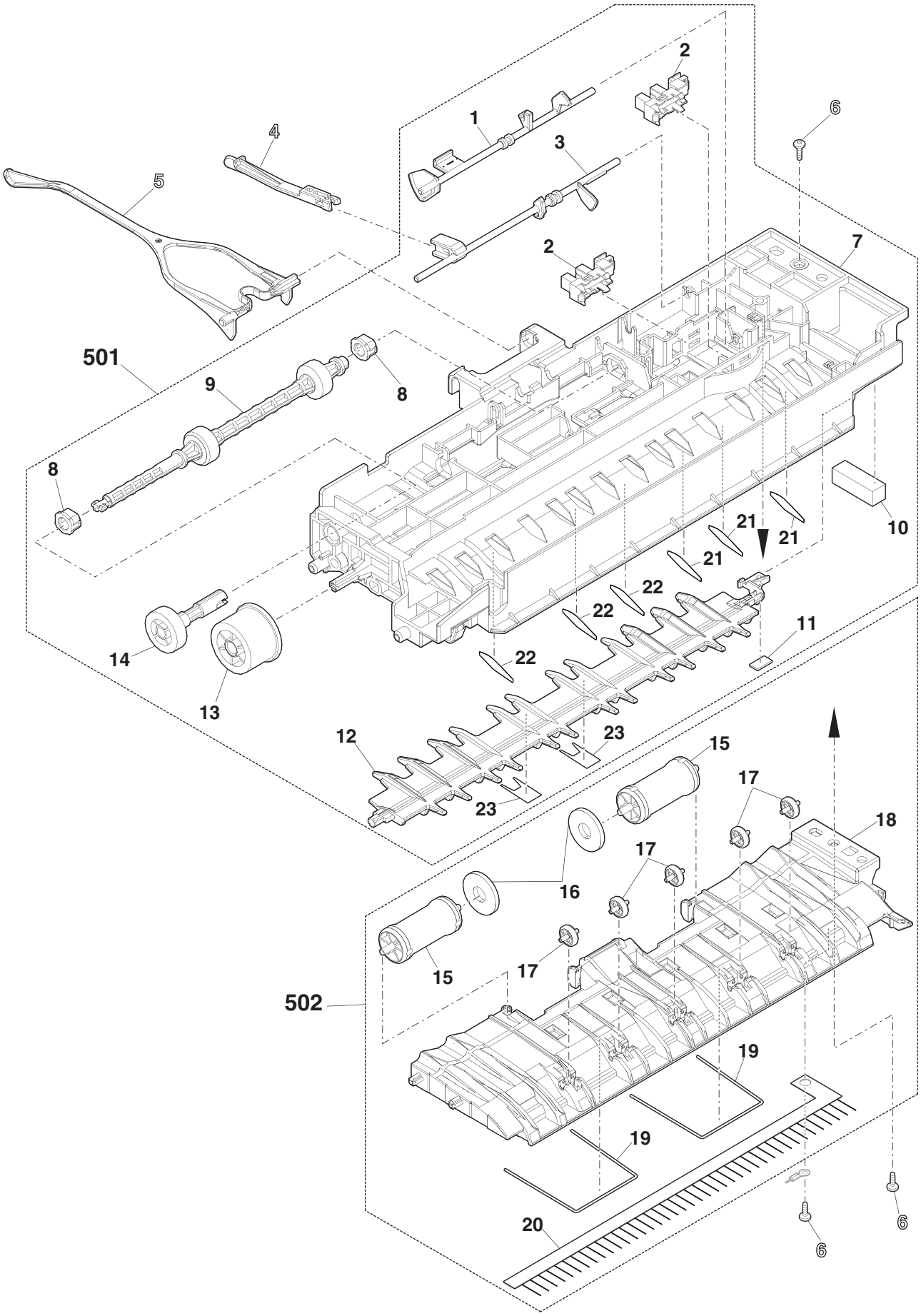

【R10】
ﾒｲﾝ駆動ﾕﾆｯﾄ (Main drive unit)

NO.	PARTS CODE	PRICE RANK Ex.	PRICE RANK Ja.	DESCRIPTION		Inter-change	Reason for change	Effective time
1	CFRM-0135QS03	AZ	FQ	Main drive frame	ﾒｲﾝ駆動ﾌﾚｰﾑ			
2	NGERH0327QSZZ	AE	DJ	DV drive gear(63T)	DV 駆動ｷﾞｱ			
3	NGERH2151FCZZ	AR	EQ	Separate deceleration 2 steps gear(17/33T)	離接減速 2 段ｷﾞｱ			
4	XRESP40-06000	AA	DD	E ring(E4)	E ﾘﾝｸﾞ			
5	NGERH0395QSZZ	AD	DJ	DV deceleration helical gear(52T/34T)	DV 減速ｷﾞｱ			
6	NGERH0322QSZZ	AG	DS	Drum drive gear(113T/20T)	ﾄﾞﾗﾑ駆動ｷﾞｱ			
7	MSPRC0501QSZZ	AB	DD	DR earth spring	DR ｱｰｽｽﾌﾟﾘﾝｸﾞ			
8	NSFTZ0147QSZZ	AE	DJ	DR earth shaft	DR ｱｰｽｼｬﾌﾄ			
9	NCPL-0020QSZZ	AF	DS	DR coupling JNT	DR ｶｯﾌﾟﾘﾝｸﾞ JNT			
10	NGERH0325QSZZ	AG	DS	Belt idle gear(95T)	ﾍﾞﾙﾄｱｲﾄﾞﾙｷﾞｱ			
11	NGERH0324QSZZ	AF	DS	Belt idle gear(48T)	ﾍﾞﾙﾄｱｲﾄﾞﾙｷﾞｱ			
12	NGERH0320QSZZ	AG	DS	Drum deceleration gear(72T/58T)	ﾄﾞﾗﾑ減速ｷﾞｱ			
13	NGERH0330QSZZ	AF	DS	Drum idle gear(58T)	ﾄﾞﾗﾑｱｲﾄﾞﾙｷﾞｱ			
14	NGERH0319QSZZ	AG	DS	Belt drive gear(96T/16T)	ﾍﾞﾙﾄ駆動ｷﾞｱ			
15	NCPL-0113FCAZ	AE	DS	Belt coupling JNT	ﾍﾞﾙﾄｶｯﾌﾟﾘﾝｸﾞ JNT			
16	XBPS730P06KS0	AB	DD	Screw(3×6KS)	ﾋﾞｽ			
17	NBLTH0063QSZZ	AG	DX	Belt(40S2M284)	ﾍﾞﾙﾄ			
18	NPLYZ0453FCZZ	AC	DJ	Drive pulley(24P)	駆動ﾌﾟｰﾘｰ			
19	LPiNS0133FCZZ	AA	DD	Pin(φ2-10)	平行ﾋﾟﾝ			
20	LHLDZ0185QSZ2	AV	FG	DV drive holder	DV 駆動ﾎﾙﾀﾞｰ			
21	NBRGM0968FCZZ	AC	DD	Bearing(φ6)	軸受			
22	LX-WZ0473FCZZ	AA	DD	Poly slider(φ6.2-12 t0.25)	ﾎﾟﾘｽﾗｲﾀﾞｰ			
23	PCLC-0038QSZ1	AQ	EQ	Clutch(2.5KG)	ｸﾗｯﾁ			
24	NSFTZ0148QSZZ	AF	DS	DV drive shaft A	DV 駆動軸 A			
25	XHBS730P06000	AC	DD	Screw(3×6)	ﾋﾞｽ			
26	RMŌTP0110QSPZ	BF	GN	Motor	ﾓｰﾀｰ			
27	NGERH0397QSZZ	AC	DD	Gear(21T)	ｷﾞｱ			
28	NSFTZ0149QSZZ	AF	DS	DV drive shaft B	DV 駆動軸 B			
29	XEBS740P10000	AA	DD	Screw(4×10)	ﾋﾞｽ			
30	NSFTD0163QSZZ	AF	DS	Separate input shaft	離接入力軸			
31	LPiNS0330FCZZ	AB	DJ	Spring pin(φ3-16)	ｽﾌﾟﾘﾝｸﾞﾋﾟﾝ			
32	NGERH1617FCZZ	AC	DJ	ADU joint gear(28T)	ADU 連結ｷﾞｱ			
33	LSTYM0011QSZ2	AG	DS	Belt gear support plate	ﾍﾞﾙﾄｷﾞｱ保持板			
34	CPLTM0648QS04	AZ	FQ	Gear support plate	ｷﾞｱ保持板			
35	NGERH0542QSZ1	AP	EQ	DV coupling gear	DV ｶｯﾌﾟﾘﾝｸﾞｷﾞｱ			
36	NGERH0321QSZZ	AC	DD	Waste toner coupling gear	廃ﾄﾅｰｶｯﾌﾟﾘﾝｸﾞｷﾞｱ			
37	NGERH0396QSZZ	AD	DJ	Gear(59T)	ｷﾞｱ			
38	LPLTM0632QSZ1	AH	DX	DV support plate	DV 保持板			
39	VHPSG2A241+-1	AG	DX	Photo sensor(SG2A241)	ﾌｫﾄｾﾝｻｰ			
	(Unit)							
901	DUNT-1472USZZ	BZ	TR	Main drive unit	ﾒｲﾝ駆動ﾕﾆｯﾄ			

【R10】

ﾒｲﾝ駆動ﾕﾆｯﾄ (Main drive unit)

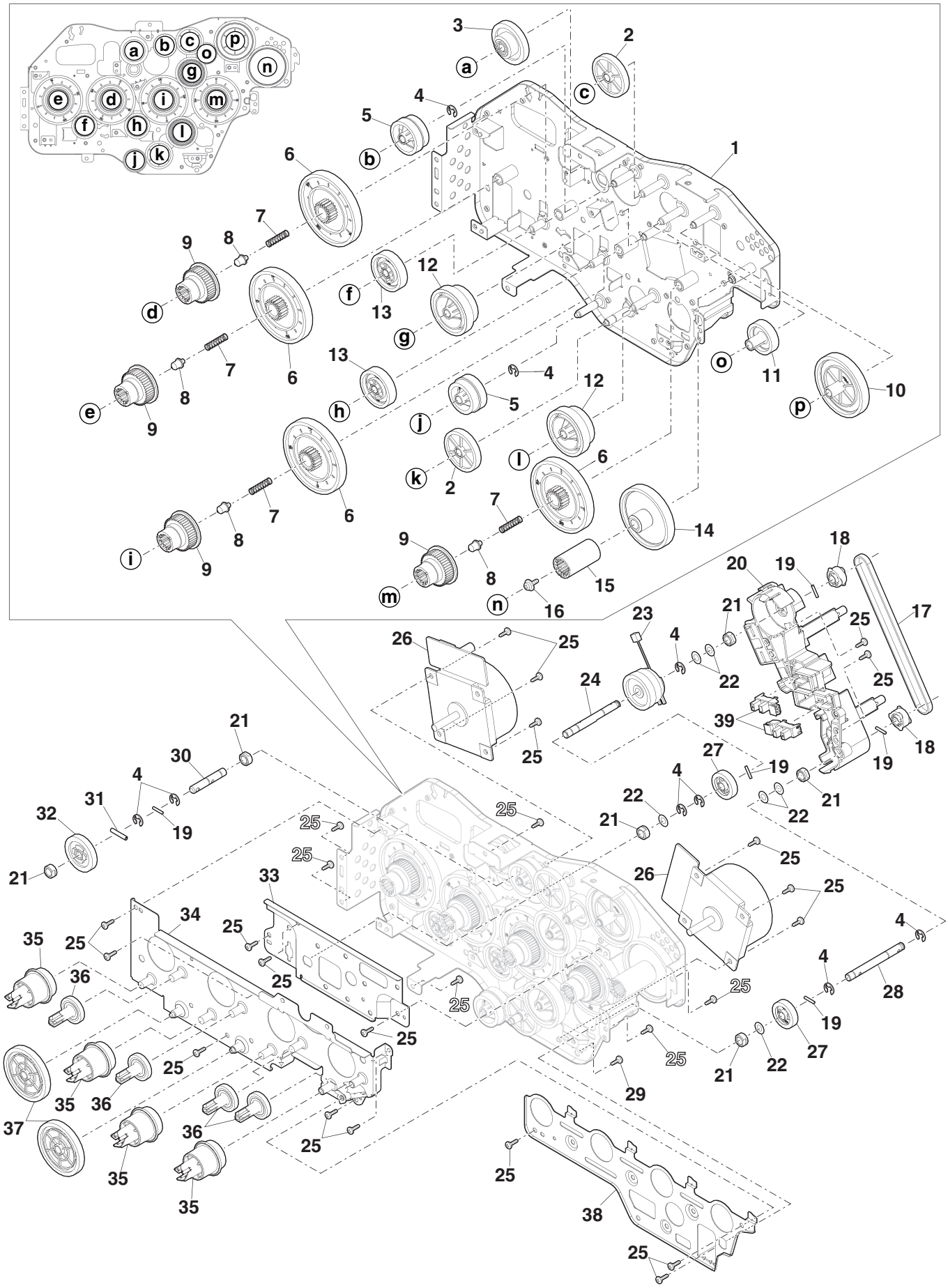

【R30】
TN 駆動ﾕﾆｯﾄ (TN drive unit)

NO.	PARTS CODE	PRICE RANK Ex.	PRICE RANK Ja.	DESCRIPTION		Inter-change	Reason for change	Effective time
1	ＮＧＥＲＨ０３７３ＱＳＺＺ	AD	DD	TN idle gear B	TN ｱｲﾄﾞﾙｷﾞｱ B			
2	ＰＣＯＶＰ０２０７ＱＳＺ１	AP	EQ	TN drive cover	TN 駆動ｶﾊﾞｰ			
3	ＮＧＥＲＨ０３７２ＱＳＺＺ	AD	DJ	TN joint gear	TN ｼﾞｮｲﾝﾄｷﾞｱ			
4	ＮＧＥＲＨ０３７６ＱＳＺＺ	AD	DJ	TN clutch idle gear	TN ｸﾗｯﾁｱｲﾄﾞﾙｷﾞｱ			
5	ＬＨＬＤＺ０１９２ＱＳＺＺ	AE	DS	Power supply switch fixing holder	電源ｽｲｯﾁ取付ﾎﾙﾀﾞｰ			
6	ＸＥＰＳ７２３Ｐ１２０００	AA	DD	Screw(2.3×12)	ﾋﾞｽ			
7	ＮＧＥＲＨ０３７４ＱＳＺＺ	AD	DJ	TN clutch gear	TN ｸﾗｯﾁｷﾞｱ			
8	ＰＣＬＣ－００３９ＱＳＺ１	AR	EQ	Clutch(5KG)	ｸﾗｯﾁ			
9	ＮＧＥＲＨ０３７５ＱＳＺＺ	AD	DJ	TN docking gear	TN ﾄﾞｯｷﾝｸﾞｷﾞｱ			
10	ＰＧｉＤＭ０２３１ＱＳＺ２	AP	EQ	TN guide	TN ｶﾞｲﾄﾞ			
♣	ＰＧｉＤＭ０２３１ＱＳＺ３	AP	EQ	TN guide	TN ｶﾞｲﾄﾞ			
11	ＸＥＢＳ７３０Ｐ０８０００	AC	DD	Screw(3×8)	ﾋﾞｽ			
	(Unit)							
901	ＤＵＮＴ－１１１１ＵＳ１２	BQ	LP	TN drive unit	TN 駆動ﾕﾆｯﾄ			
♣	ＤＵＮＴ－１１１１ＵＳ１３	BQ	LP	TN drive unit	TN 駆動ﾕﾆｯﾄ			

Matrix

No.10	TN ｶﾞｲﾄﾞ (TN guide)	
PARTS CODE	Americas	Europe Japan
ＰＧｉＤＭ０２３１ＱＳＺ２	1st Lot	
ＰＧｉＤＭ０２３１ＱＳＺ３		1st Lot

No.901	TN 駆動ﾕﾆｯﾄ (TN drive unit)	
PARTS CODE	Americas	Europe Japan
ＤＵＮＴ－１１１１ＵＳ１２	1st Lot	
ＤＵＮＴ－１１１１ＵＳ１３		1st Lot

【R30】

TN 駆動ﾕﾆｯﾄ (TN drive unit)

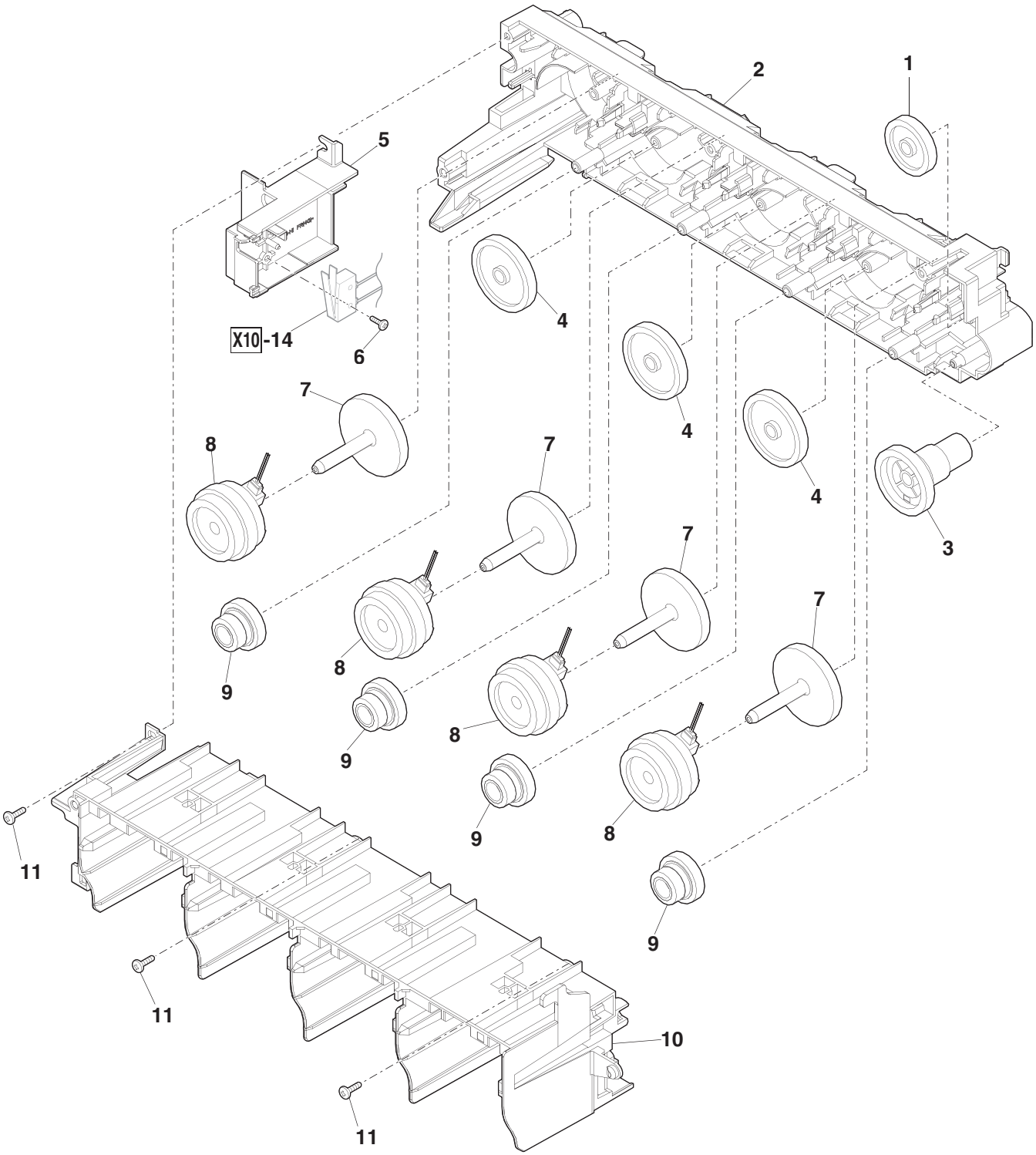

【T10】
排紙駆動ﾕﾆｯﾄ 1(Delivery drive unit 1)

NO.	PARTS CODE	PRICE RANK Ex.	PRICE RANK Ja.	DESCRIPTION		Inter-change	Reason for change	Effective time
1	ＸＲＥＳＰ４０－０６０００	AA	DD	E ring(E4)	Ｅﾘﾝｸﾞ			
2	ＮＧＥＲＨ０３３５ＱＳＺ１	AM	EG	Fusing gear(21T)	定着ｷﾞｱ			
3	ＬＰｉＮＳ０１３３ＦＣＺＺ	AA	DD	Pin(φ2-10)	平行ﾋﾟﾝ			
4	ＬＰｉＮＳ００３５ＱＳＺＺ	AC	DD	Spring pin(3-24)	ｽﾌﾟﾘﾝｸﾞﾋﾟﾝ			
5	ＣＦＲＭ－０１３６ＱＳ０５	AW	FG	Transport drive frame	搬送駆動ﾌﾚｰﾑ			
6	ＮＧＥＲＨ０３６８ＱＳＡＺ	AE	DJ	Gear(14/33T)	ｷﾞｱ			
7	ＬＰＬＴＭ０７９８ＱＳＺＺ	AE	DJ	Tilt fixing plate R	ﾁﾙﾄ取付板 R			
8	ＸＨＢＳ７３０Ｐ０６０００	AC	DD	Screw(3×6)	ﾋﾞｽ			
9	ＣＰＬＴＭ０６４５ＱＳ０２	AN	EG	Transport drive plate	搬送駆動ﾌﾟﾚｰﾄ			
10	ＮＧＥＲＨ０３４０ＱＳＺＺ	AD	DD	Gear(27T)	ｷﾞｱ			
11	ＸＢＰＳ７３０Ｐ０６ＷＳ０	AA	DD	Screw(3×6)	ﾋﾞｽ			
12	ＮＧＥＲＨ０３４１ＱＳＡＺ	AD	DD	Gear(24T)	ｷﾞｱ			
13	ＮＧＥＲＨ０３３３ＱＳＡＺ	AE	DJ	Gear(20/26T)	ｷﾞｱ			
14	ＮＧＥＲＨ０３５２ＱＳＺＺ	AC	DD	Gear(21T)	ｷﾞｱ			
15	ＮＧＥＲＨ０３５３ＱＳＺＺ	AE	DJ	Gear(40T)	ｷﾞｱ			
16	ＮＧＥＲＨ０３３９ＱＳＡＺ	AF	DS	Fusing deceleration gear(T80/23)	定着減速ｷﾞｱ			
17	ＮＧＥＲＨ０３３６ＱＳＡＺ	AD	DJ	Gear(18T)	ｷﾞｱ			
18	ＮＧＥＲＨ０３３８ＱＳＡＺ	AE	DS	Transport deceleration gear(T61/22)	搬送減速ｷﾞｱ			
19	ＮＢＲＧＰ０８９７ＦＣＺ２	AC	DD	ADU bearing	ADU 軸受			
20	ＮＧＥＲＨ０３３７ＱＳＡＺ	AE	DJ	Gear(22T/22T)	ｷﾞｱ			
21	ＮＳＦＴＺ０３１０ＱＳＺＺ	AN	EQ	Fusing drive shaft	定着駆動軸			
22	ＮＳＦＴＺ０３１１ＱＳＺＺ	AN	EG	PS drive shaft	PS 駆動軸			
23	ＰＣＬＣ－０４０２ＦＣＺＺ	AT	EZ	Clutch(3.5Kg)	ｸﾗｯﾁ			
24	ＮＧＥＲＨ０３３４ＱＳＡＺ	AE	DJ	Gear(24T/30T)	ｷﾞｱ			
25	ＮＧＥＲＷ０３６３ＱＳＺＺ	AF	DS	Waste toner worm gear	廃ﾄﾅｰｳｫｰﾑｷﾞｱ			
26	ＮＳＦＴＺ０３１２ＱＳＺＺ	AN	EQ	Manual paper feed drive shaft	手差し駆動軸			
27	ＮＳＦＴＺ０３０９ＱＳＺＺ	AN	EQ	Paper feed drive shaft	給紙駆動軸			

【T10】

排紙駆動ﾕﾆｯﾄ 1(Delivery drive unit 1)

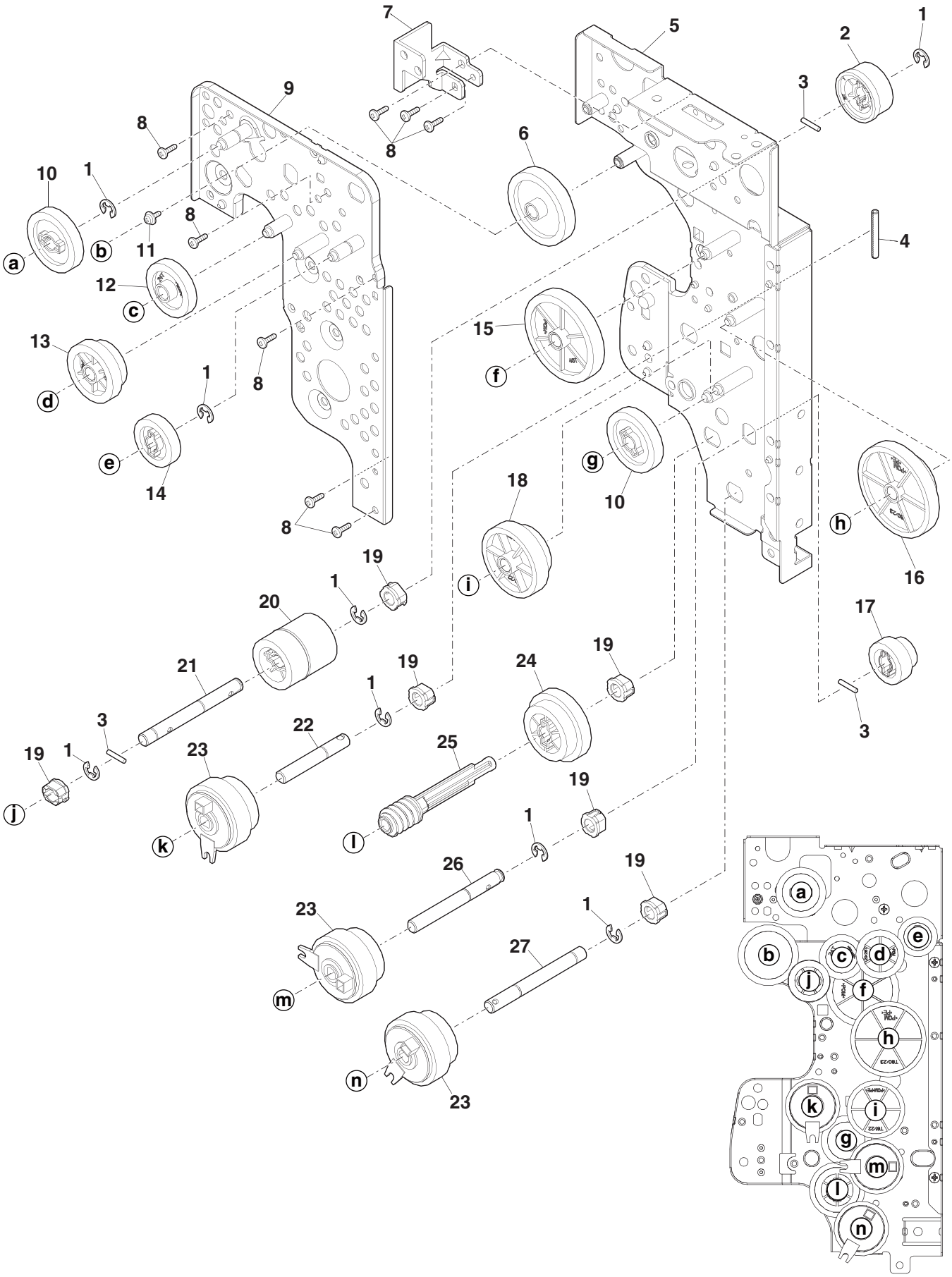

【T11】
排紙駆動ﾕﾆｯﾄ 2(Delivery drive unit 2)

NO.	PARTS CODE	PRICE RANK Ex.	PRICE RANK Ja.	DESCRIPTION		Inter-change	Reason for change	Effective time
1	ＮＢＲＧＰ０８９７ＦＣＺ２	AC	DD	ADU bearing	ADU 軸受			
2	ＸＲＥＳＰ４０－０６０００	AA	DD	E ring(E4)	Ｅﾘﾝｸﾞ			
3	ＮＧＥＲＨ０３４０ＱＳＺＺ	AD	DD	Gear(27T)	ｷﾞｱ			
4	ＬＰｉＮＳ０１３３ＦＣＺＺ	AA	DD	Pin(φ2-10)	平行ﾋﾟﾝ			
5	ＮＳＦＴＺ０３１４ＱＳＺＺ	AN	EG	Delivery paper drive shaft	排紙駆動軸			
6	ＰＣＬＣ－０４０２ＦＣＺＺ	AT	EZ	Clutch(3.5Kg)	ｸﾗｯﾁ			
7	ＸＨＢＳ７３０Ｐ０６０００	AC	DD	Screw(3×6)	ﾋﾞｽ			
8	ＬＰＬＴＭ０６９２ＱＳＺ１	AC	DD	Fusing fixing plate F	定着取付ﾌﾟﾚｰﾄ F			
9	ＮＧＥＲＨ０３８９ＱＳＺＺ	AD	DJ	Joint gear(16T)	連結ｷﾞｱ			
10	ＬＨＬＤＺ０２２１ＱＳＺＺ	AE	DJ	2nd transfer positioning holder upper F	２次転写位置決めﾎﾙﾀﾞｰ上 F			
11	ＬＨＬＤＺ０２２３ＱＳＺＺ	AE	DJ	2nd transfer positioning holder lower F	２次転写位置決めﾎﾙﾀﾞｰ下 F			
12	ＬＰＬＴＭ０７９９ＱＳＺＺ	AE	DS	Tilt fixing plate L	ﾁﾙﾄ取付板 L			
13	ＸＢＢＳ７３０Ｐ０６０００	AC	DD	Screw(3×6)	ﾋﾞｽ			
14	ＬＨＬＤＺ０３６３ＱＳＺＺ	AS	EQ	Delivery drive cover	排紙駆動ｶﾊﾞｰ			
15	ＮＳＦＴＺ０３１３ＱＳＺＺ	AP	EQ	ADU drive shaft	ADU 駆動軸 B			
16	ＸＥＢＳ７４０Ｐ１００００	AA	DD	Screw(4×10)	ﾋﾞｽ			
17	ＬＨＬＤＺ０３６２ＱＳＺ１			Paper feed drive cover	給紙駆動ｶﾊﾞｰ			
18	ＲＭＯＴＰ０１１０ＱＳＰＺ	BF	GN	Motor	ﾓｰﾀｰ			
19	ＮＧＥＲＨ０３４２ＱＳＡＺ	AE	DJ	Waste toner worm wheel gear	廃ﾄﾅｰｳｫｰﾑﾎｲｰﾙｷﾞｱ			
20	ＮＣＰＬ－００２９ＱＳＺＺ	AD	DD	Waste toner drive coupling	廃ﾄﾅｰ駆動ｶｯﾌﾟﾘﾝｸﾞ			
21	ＭＳＰＲＣ０５４１ＱＳＺＺ	AC	DD	Paper feed coupling spring	給紙ｶｯﾌﾟﾘﾝｸﾞｽﾌﾟﾘﾝｸﾞ			
22	ＬＰｉＮＳ０３２７ＦＣＺＺ	AC	DJ	Spring pin(φ2-10)	ｽﾌﾟﾘﾝｸﾞﾋﾟﾝ			
23	ＮＣＰＬ－００２４ＱＳＺＺ	AC	DD	Paper feed joint coupling	給紙連結ｶｯﾌﾟﾘﾝｸﾞ			
	(Unit)							
901	ＤＵＮＴ－１４７８ＵＳＺＺ	BV	RB	Delivery drive unit	排紙駆動ﾕﾆｯﾄ			

【T11】
排紙駆動ﾕﾆｯﾄ 2(Delivery drive unit 2)

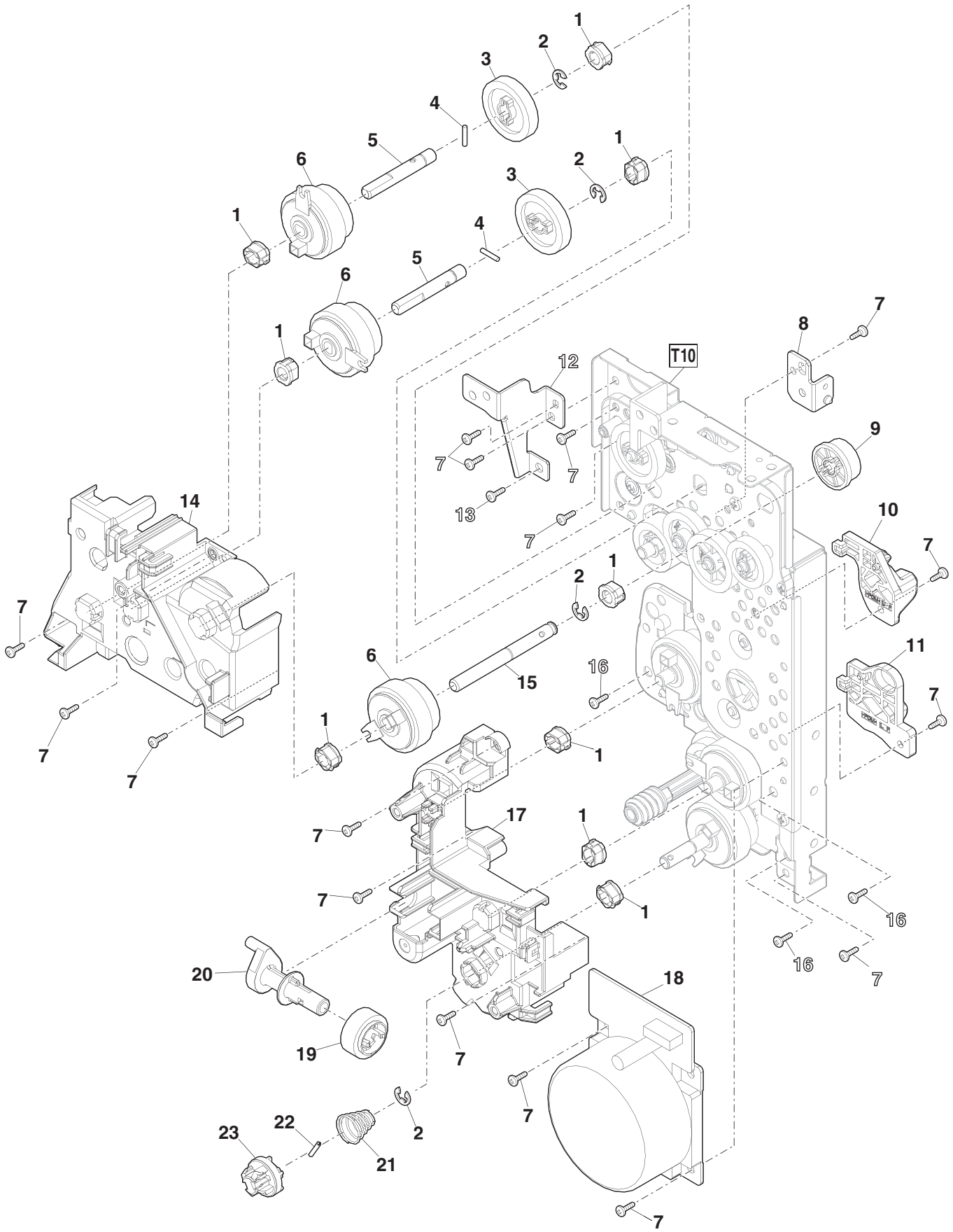

【V10】

高圧ﾎﾙﾀﾞ部 (High voltage holder section)

NO.	PARTS CODE	PRICE RANK Ex.	PRICE RANK Ja.	DESCRIPTION		Inter-change	Reason for change	Effective time
1	VHPSG2A241+-1	AG	DX	Photo sensor(SG2A241)	ﾌｫﾄｾﾝｻｰ			
2	LHLDZ0186QSA3	BE	GN	TC high voltage spring holder	TC 高圧ｽﾌﾟﾘﾝｸﾞﾎﾙﾀﾞｰ			
3	MSPRC0587QSZ1	AE	DJ	1st transfer high voltage CL spring	1 次転写高圧 CL ｽﾌﾟﾘﾝｸﾞ			
4	LHLDZ0233QSAZ	AE	DJ	TC high voltage extension holder A	TC 高圧延長ﾎﾙﾀﾞｰA			
5	XEBS730P08000	AC	DD	Screw(3×8)	ﾋﾞｽ			
6	DUNTK1346QSPZ	AK	DX	Resistor unit transfer	抵抗ﾕﾆｯﾄ転写			
7	XHBS730P06000	AC	DD	Screw(3×6)	ﾋﾞｽ			
8	MSPRC0591QSZZ	AC	DD	TC high voltage spring CL	TC 高圧ｽﾌﾟﾘﾝｸﾞ CL			
9	MSPRC0575QSZ1	AF	DS	1st transfer high voltage spring BK	1 次転写高圧ｽﾌﾟﾘﾝｸﾞ BK			
10	MSPRC0574QSZ2	AE	DS	2nd transfer high voltage spring	2 次転写高圧ｽﾌﾟﾘﾝｸﾞ			
11	LHLDZ0234QSA1	AE	DJ	TC high voltage extension holder B	TC 高圧延長ﾎﾙﾀﾞｰB			
12	LHLDZ0352QSZZ	BA	FX	DV high voltage holder	DV 高圧ﾎﾙﾀﾞｰ			
13	MSPRC0514QSZ1	AD	DJ	Process PWB spring BK	ﾌﾟﾛｾｽ基板ｽﾌﾟﾘﾝｸﾞ BK			
14	QEARP0026QSZZ	AD	DJ	MC electrode	MC 電極			
15	XBPS730P08KS0	AB	DD	Screw(3×8KS)	ﾋﾞｽ			
16	MSPRC0509QSZ1	AE	DJ	DV PWB spring C	DV 基板ｽﾌﾟﾘﾝｸﾞ C			
17	XEBS740P10000	AA	DD	Screw(4×10)	ﾋﾞｽ			
18	PCŌVP0275QSZZ	AV	FG	Interior exhaust intake duct cover	内部排気ﾀﾞｸﾄｶﾊﾞｰ			
19	PDUC-0043QSZZ	AU	FG	Interior exhaust intake duct	内部排気ﾀﾞｸﾄ			
20	NFANS0035QSPZ	BA	FX	Fan	ﾌｧﾝ			
21	XEBS740P25000	AC	DD	Screw(4×25)	ﾋﾞｽ			
22	PDUC-0044QSZZ	AV	FG	LSU exhaust intake duct	LSU 排気ﾀﾞｸﾄ			
23	PSHEP1074QSZZ	AS	EZ	LSU exhaust duct sheet	LSU 排気ﾀﾞｸﾄｼｰﾄ			
24	PCŌVP0204QSZ1	AD	DJ	Discharge lamp fixing cover	除電ﾗﾝﾌﾟ取付ｶﾊﾞｰ			
⚠ 25	CPWBF2062GS53	AS	EQ	DL PWB	DL 基板			

【V10】

高圧ﾎﾙﾀﾞ部 (High voltage holder section)

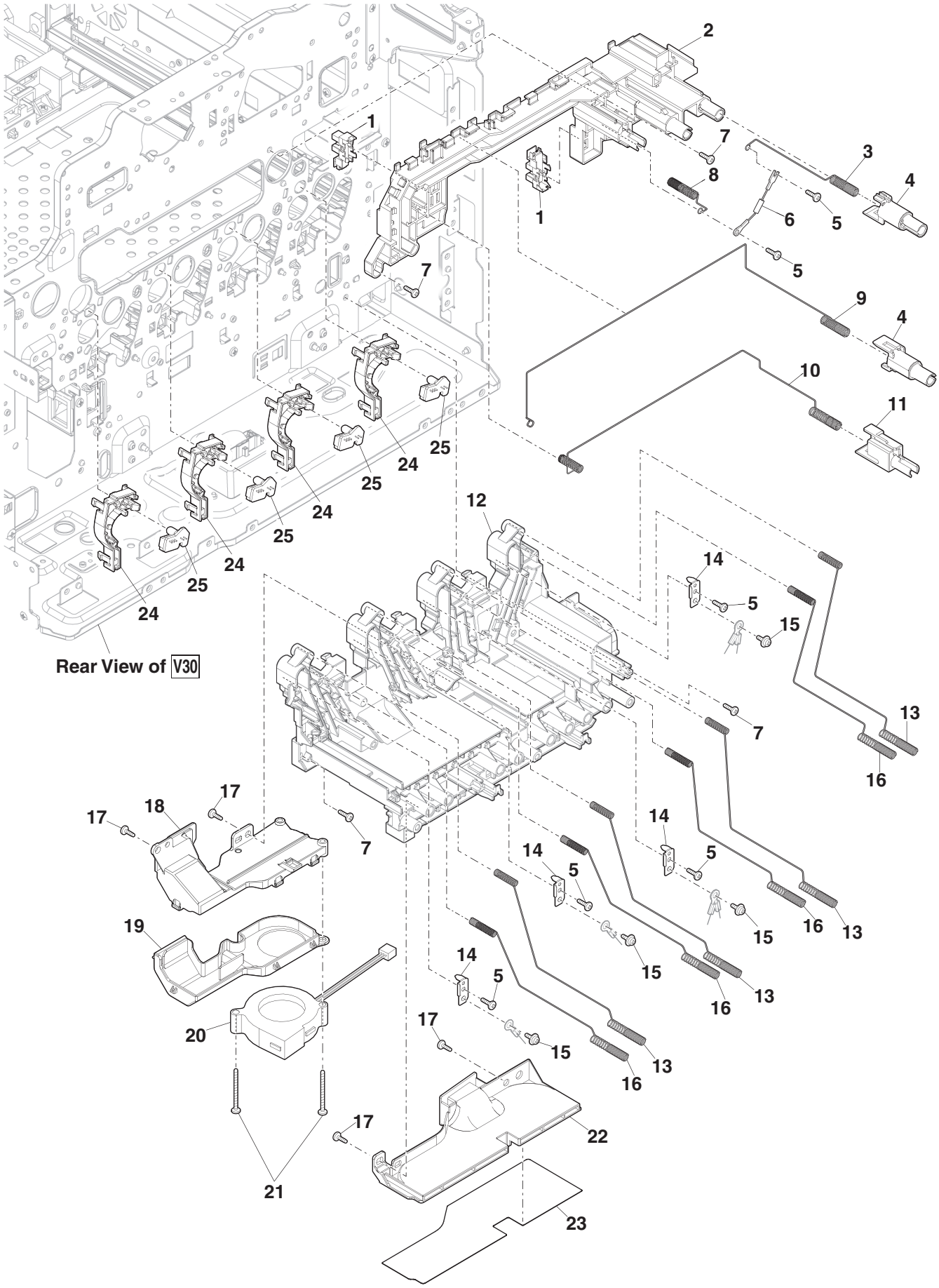

【V20】
基板部 1(PWB section 1)

	NO.	PARTS CODE	PRICE RANK Ex.	PRICE RANK Ja.	DESCRIPTION		Inter-change	Reason for change	Effective time
	1	XHBS730P06000	AC	DD	Screw(3×6)	ﾋﾞｽ			
⚠	2	RDENC0098QSPZ	BX	TF	Dc power supply pwb	DC 電源基板			
	3	XEBS740P35000	AC	DD	Screw(4×35)	ﾋﾞｽ			
	4	NFANP0135FCP1	AW	FG	Fan	ﾌｧﾝ			
	5	PDUC-0026QSZZ	AH	DX	Low voltage power supply fan duct	低圧電源ﾌｧﾝﾀﾞｸﾄ			
⚠	6 ♣	CPWBF0361US51	BM	HV	ACHL PWB	ACHL 基板			
⚠		CPWBF0362US51	BM	HV	ACHL PWB	ACHL 基板			
⚠		CPWBF0363US51	BH	HC	ACHL PWB	ACHL 基板			
	7	XHPS730P10KS0	AD	DJ	Screw(3×10)	ﾋﾞｽ			
	8	LFRM-0190QSZZ	BD	GN	Upper frame	上ﾌﾚｰﾑ			
	9	LSTYM0016QSZ1	AK	DX	Toner drive stay	ﾄﾅｰ駆動ｽﾃｲ			
	10	LSTYM0015QSZZ	AK	DX	Fusing stay	定着ｽﾃｲ			
	11	LRALM0022QSZZ	AG	DS	Transfer unit rail right	転写ﾕﾆｯﾄﾚｰﾙ右			
	12	PSHEZ0814QSZZ	AC	DD	Upper frame sheet A	上ﾌﾚｰﾑｼｰﾄ A			
	13	PFiLZ0039QSZZ	AH	DX	Power supply intake filter	電源吸気ﾌｨﾙﾀ			

Matrix

No.6	ACHL 基板 (ACHL PWB)		
PARTS CODE	Americas	Europe	Japan
CPWBF0361US51			1st Lot
CPWBF0362US51	1st Lot		
CPWBF0363US51		1st Lot	

【V20】
基板部 1(PWB section 1)

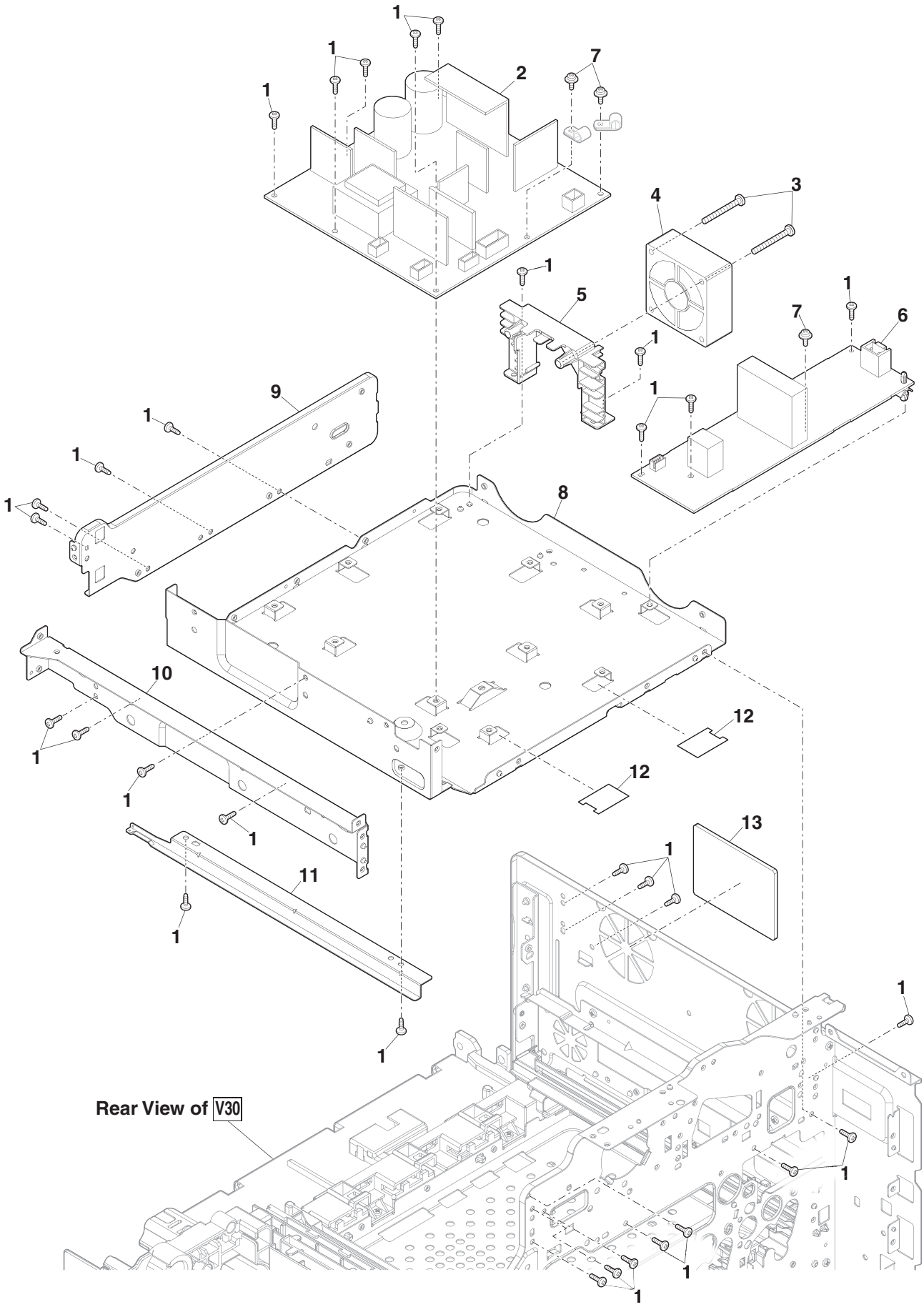

【V21】
基板部 2(PWB section 2)

	NO.	PARTS CODE	PRICE RANK Ex.	PRICE RANK Ja.	DESCRIPTION		Inter-change	Reason for change	Effective time
	1	XHBS730P06000	AC	DD	Screw(3×6)	ﾋﾞｽ			
	2	LPLTM0797QSZ1	AD	DJ	High voltage fixing plate	高圧固定板			
	3	XBPS740P06K00	AA	DD	Screw(4×6K)	ﾋﾞｽ			
	4	XHBS730P08KS0	AC	DD	Screw(3×8KS)	ﾋﾞｽ			
	5	LPLTM0734QSZ1	AV	FG	Inlet fixing plate	ｲﾝﾚｯﾄ取付板			
	6	LPLTM0733QSZZ	AK	DX	AC cord fixing plate(LT11U)	AC ｺｰﾄﾞ取付板			
	7	PSHEZ0873QSZZ	AC	DD	AC cord cover sheet	AC ｺｰﾄﾞｶﾊﾞｰｼｰﾄ			
⚠	8	QACCDR715QCPZ	BD	GJ	AC cord	AC ｺｰﾄﾞ			
⚠ ♣		QACCJR416QCPZ	BD	GJ	AC cord	AC ｺｰﾄﾞ			
	9	LFiX-0016FCZZ	AD	DJ	AC cord fixture	AC ｺｰﾄﾞ押え			
♣		LFiX-0084FCZZ	AC	DD	AC cord fixture	AC ｺｰﾄﾞ押え			
	10	XBPS740P25XS0	AB	DD	Screw(4×25)	ﾋﾞｽ			
	11	XHBS740P08000	AA	DD	Screw(4×8)	ﾋﾞｽ			
	12	LX-BZ0088QSPZ	AA	DD	Screw(3x6)	ﾋﾞｽ			
	13	PSHEP0953QSZZ	AL	EB	DV PWB protect sheet	DV 基板保護ｼｰﾄ			
	14	PGUMM0026QSZ1	AE	DJ	High voltage PWB fixer	高圧基板押え			
	15	XEBS740P10000	AA	DD	Screw(4×10)	ﾋﾞｽ			
⚠	16	RDENU0104QSPZ	BX	TF	HV PWB	HV 基板			
	17	PSHEP0829QSZZ	AE	DJ	High voltage terminal spacer	高圧端子ｽﾍﾟｰｻｰ			
	18	VHi0MFP25051T	BR	LX	SOC PRG	SOC PRG			
♣		VHi0MFP25052T	BR	LX	SOC PRG JP	SOC PRG JP			
		VHi0MFP25053T	BR	LX	SOC PRG EU	SOC PRG EU			
	19	XBBS720P04000	AA	DD	Screw	ﾋﾞｽ			
	20	LPLTM1054QSZZ	BD	GN	MFPC PWB shield plate	MFPC 基板ｼｰﾙﾄﾞ板			
	21	XBBS730P06000	AC	DD	Screw(3×6)	ﾋﾞｽ			
	22	LPLTM0711QSZZ	AK	DX	Rear cabinet reinforce plate	後ｷｬﾋﾞ補強板			
	23	LPLTM0717QSZ1	AK	DX	HDD fixing plate	HDD 取付板			
	24	XBBS730P04000	AA	DD	Screw(3×4)	ﾋﾞｽ			
	25	PDMP-0001QSZZ	AK	DX	HDD damper	HDD ﾀﾞﾝﾊﾟｰ			
	26	LX-BZ1134FCPZ	AC	DJ	Step screw(M3)	段ﾋﾞｽ			
	27	LPLTM0718QSZ1	AE	DS	HDD fixing plate	HDD 固定板			
	28	DUNT-9232FCPZ	CC	ZZ	HDD(500GB 2.5Inch)	ﾊｰﾄﾞﾃﾞｨｽｸ			
⚠	29	CPWBN2166FCE7	BP	LP	LIU PWB	LIU 基板			
⚠ ♣		CPWBN2166FCE8	BR	LP	LIU PWB	LIU 基板			
⚠	30	CPWBX2164FCH1	BY	TF	FAX MAIN PWB	FAX MAIN 基板			
	31	LPLTM0716QSZ2			FAX PWB fixing plate	FAX 基板取付板			
⚠	32	CPWBX2237FCH1	CA	TV	FAX PWB	FAX 基板			
	33	VHi24A64FiP-1	AQ	EQ	EEPROM(24AA64F-I/P)	EEPROM			
⚠	34	CPWBX0360US52	BV	RB	PCU PWB	PCU 基板			
⚠ ♣		CPWBX0360US54	BV	RB	PCU PWB	PCU 基板			
⚠		CPWBX0360US56	BV	RB	PCU PWB	PCU 基板			
	35	LPLTM0712QSZ1	AN	EQ	PCU PWB fixing plate	PCU 基板取付板			
	36	TLABN1235CCZZ	AA	DD	Label	ﾗﾍﾞﾙ			
	501	CPLTM1055US61	DE	**	MFPC PWB unit	MFPC 基板ﾕﾆｯﾄ			
		CPLTM1055US62	DE	**	MFPC PWB unit	MFPC 基板ﾕﾆｯﾄ			
♣◆		CPLTM1055US63	DE	**	MFPC PWB unit	MFPC 基板ﾕﾆｯﾄ			
		CPLTM1055US64	DE	**	MFPC PWB unit	MFPC 基板ﾕﾆｯﾄ			

【V21】
基板部 2(PWB section 2)

Matrix

No.8	AC ｺｰﾄﾞ (AC cord)	
PARTS CODE	Americas	Japan
ＱＡＣＣＤＲ７１５ＱＣＰＺ	1st Lot	
ＱＡＣＣＪＲ４１６ＱＣＰＺ		1st Lot

No.9	AC ｺｰﾄﾞ押え (AC cord fixture)	
PARTS CODE	Americas	Japan
ＬＦｉＸ－００１６ＦＣＺＺ		1st Lot
ＬＦｉＸ－００８４ＦＣＺＺ	1st Lot	

No.18	SOC PRG (SOC PRG)		
PARTS CODE	Americas	Europe	Japan
ＶＨｉ０ＭＦＰ２５０５１Ｔ	1st Lot		
ＶＨｉ０ＭＦＰ２５０５２Ｔ			1st Lot
ＶＨｉ０ＭＦＰ２５０５３Ｔ		1st Lot	

No.29	LIU 基板 (LIU PWB)	
PARTS CODE	Americas	Europe
ＣＰＷＢＮ２１６６ＦＣＥ７	1st Lot	
ＣＰＷＢＮ２１６６ＦＣＥ８		1st Lot

No.34	PCU 基板 (PCU PWB)		
PARTS CODE	Americas	Europe	Japan
ＣＰＷＢＸ０３６０ＵＳ５２	1st Lot		
ＣＰＷＢＸ０３６０ＵＳ５４			1st Lot
ＣＰＷＢＸ０３６０ＵＳ５６		1st Lot	

No.501	MFPC 基板ﾕﾆｯﾄ (MFPC PWB unit)			
PARTS CODE	MX-C304W	MX-C303W	MX-C306W	MX-C305W
ＣＰＬＴＭ１０５５ＵＳ６１				1st Lot
ＣＰＬＴＭ１０５５ＵＳ６２			1st Lot	
ＣＰＬＴＭ１０５５ＵＳ６３		1st Lot		
ＣＰＬＴＭ１０５５ＵＳ６４	1st Lot			

【V21】
基板部 2(PWB section 2)

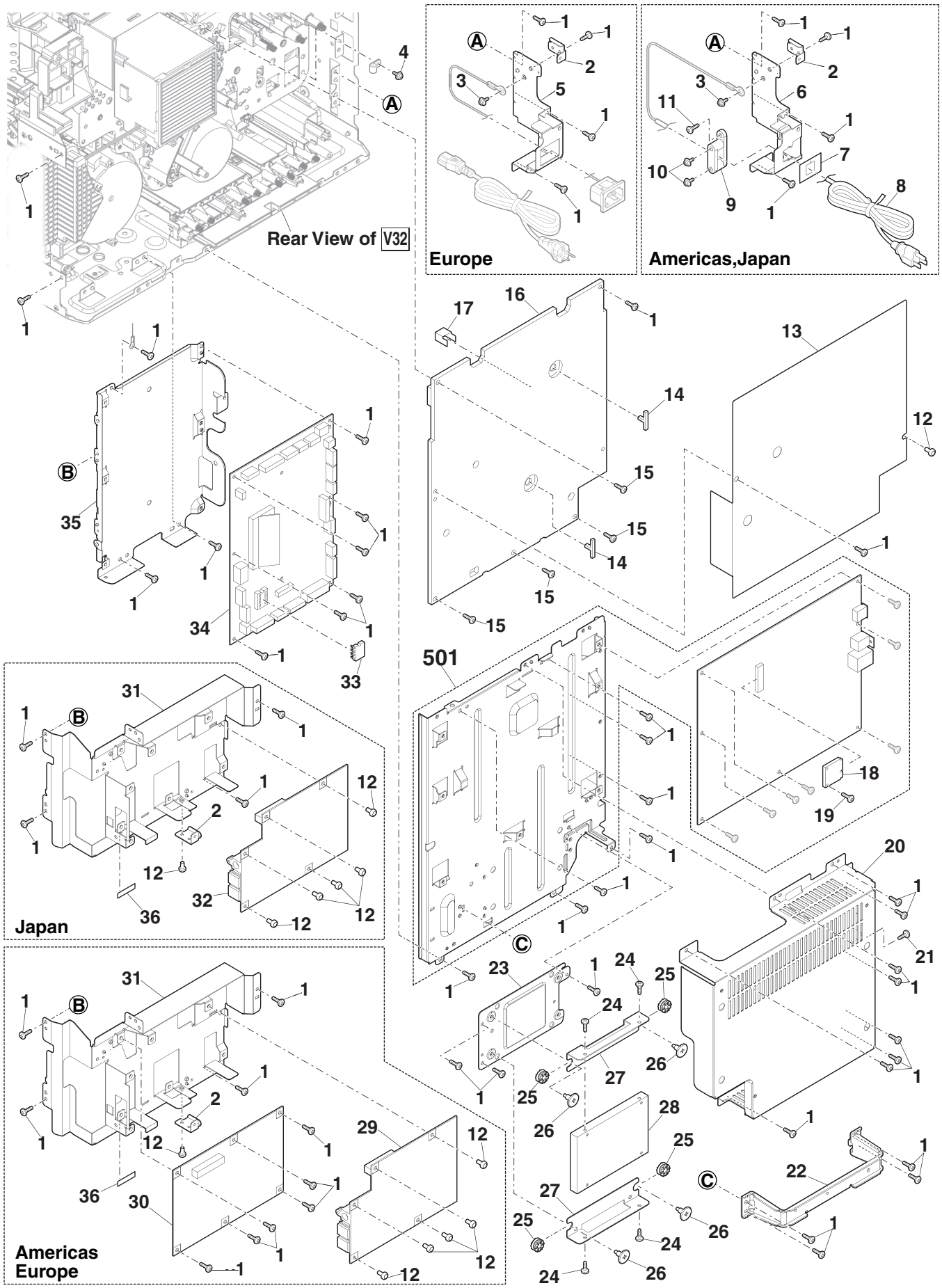

【V30】

フレーム部 1(Frame section 1)

NO.	PARTS CODE	PRICE RANK Ex.	PRICE RANK Ja.	DESCRIPTION		Inter-change	Reason for change	Effective time
1	XHBS730P06000	AC	DD	Screw(3×6)	ﾋﾞｽ			
2	LPLTM0691QSZ1	AC	DD	Fusing fixing plate	定着取付ﾌﾟﾚｰﾄ			
3	XEBS740P10000	AA	DD	Screw(4×10)	ﾋﾞｽ			
4	GLEGG0064FCZ1	AB	DD	Rubber foot	ｺﾞﾑ足			
5	LHLDZ0222QSZZ	AD	DJ	2nd transfer positioning holder upper R	2 次転写位置決めﾎﾙﾀﾞｰ上 R			
6	XHBS730P08000	AB	DD	Screw(3×8)	ﾋﾞｽ			
7	MLŌKZ0011FCZ1	AC	DJ	Cassette lock	ｶｾｯﾄﾛｯｸ			
8	XHBS740P10000	AA	DD	Screw(4×10)	ﾋﾞｽ			
9	PMLT-0243QSZZ	AF	DS	Transfer lower cushion	転写下ﾓﾙﾄ			
10	LHLDZ0195QSZ1	AF	DS	LSU fixing holder	LSU 取付ﾎﾙﾀﾞｰ			
11	LRALM0018QSZZ	AG	DX	Transfer unit rail front	転写ﾕﾆｯﾄﾚｰﾙ前			
12	LPLTP0667QSZZ	AG	DX	Cassette rail	ｶｾｯﾄﾚｰﾙ			
13	CSTYM0018QS01	AH	DX	Positioning stay	位置決めｽﾃｲ			
14	NSFTP0142QSZZ	AE	DJ	Right door fulcrum shaft	右ﾄﾞｱ支点軸			
15	PCŌVP0214QSZZ	AH	DX	Ozone duct cover	ｵｿﾞﾝﾀﾞｸﾄｶﾊﾞｰ			
16	PMLT-0228QSZ1	AK	DX	Ozone intake duct joint cushion B	ｵｿﾞﾝﾀﾞｸﾄ連結ﾓﾙﾄ B			
17	PMLT-0213QSZ1	AK	DX	Process intake duct cushion	ﾌﾟﾛｾｽﾀﾞｸﾄﾓﾙﾄ			
18	PDUC-0023QSZZ	AK	DX	Ozone duct	ｵｿﾞﾝﾀﾞｸﾄ			
19	LPLTP0668QSZ1	AL	EB	Process rail black	ﾌﾟﾛｾｽﾚｰﾙ黒			
20	LX-WZ2028SCPZ	AA	DD	Washer(3×10)	ﾜｯｼｬｰ			
21	XEBS730P08000	AC	DD	Screw(3×8)	ﾋﾞｽ			
22	VHPSG2A241+-1	AG	DX	Photo sensor(SG2A241)	ﾌｫﾄｾﾝｻｰ			
23	VHPGP2A200L-18	AQ	EQ	Photo sensor(GP2A200LCS)	ﾌｫﾄｾﾝｻｰ			
24	MLEVP0229QSZZ	AR	EQ	Paper existence detect actuator	用紙有無検知ｱｸﾁｪｰﾀ -			
25	MSPRT4514QSZZ	AL	EB	Cassette actuator spring	ｶｾｯﾄｱｸﾁｭｴｰﾀｰｽﾌﾟﾘﾝｸﾞ			
26	LPLTP1061QSZZ	AQ	EQ	Cassette actuator movable plate	ｶｾｯﾄｱｸﾁｭｴｰﾀｰ可動板			
27	LSTYM0030QSZZ	BA	FX	Handle stay	取手ｽﾃｲ			
28	PGiDM0330QSZZ	AY	FQ	Handle PG	取手ﾍﾟｰﾊﾟｰｶﾞｲﾄﾞ			
29	LDAiU0055QSZ2	AS	EQ	LSU base plate	LSU 台板			
30	LRALP0019QSAZ	AH	DX	Process rail B	ﾌﾟﾛｾｽﾚｰﾙ B			
31	PCŌVP0195QSZZ	AD	DJ	Waste toner detect sensor cover	廃ﾄﾅｰ検知ｾﾝｻｰｶﾊﾞｰ			
32	VHPSG2851++-1	AL	EB	Photo sensor(SG2851)	ﾌｫﾄｾﾝｻｰ			
33	PSHEP0822QSZZ	AC	DD	Nclination adjust sheet	傾き調整ｼｰﾄ			
34	PMLT-0236QSZ1	AC	DD	Power supply exhaust duct outside cushion	電源排気ﾀﾞｸﾄ外ﾓﾙﾄ			
35	LPLTM0696QSZ2	AG	DX	Rear frame reinforce plate	後ﾌﾚｰﾑ補強板			
36	PMLT-0237QSZ1	AC	DD	Power supply exhaust duct inside cushion	電源排気ﾀﾞｸﾄ内ﾓﾙﾄ			
37	LHLDZ0351QSZZ	AQ	EQ	2ND drawer fixing holder	2ND ﾄﾞﾛｱ取付ﾎﾙﾀﾞｰ			
38	LX-HZ0002QSPZ	AC	DD	Step screw	段ﾋﾞｽ			
39	DUNT-1181US12	AV	FG	Speaker	ｽﾋﾟｰｶｰ			
40	PBRSR0273FCZZ	AK	EB	Discharger brush	除電ﾌﾞﾗｼ			
41	LPLTP0697QSZ1	AE	DJ	Front cabinet false close eject plate	前ｷｬﾋﾞ誤閉防止板			
42	PCŌVP0211QSZ1	AK	DX	WT support cover	WT 補助ｶﾊﾞｰ			

【V30】

ﾌﾚｰﾑ部 1(Frame section 1)

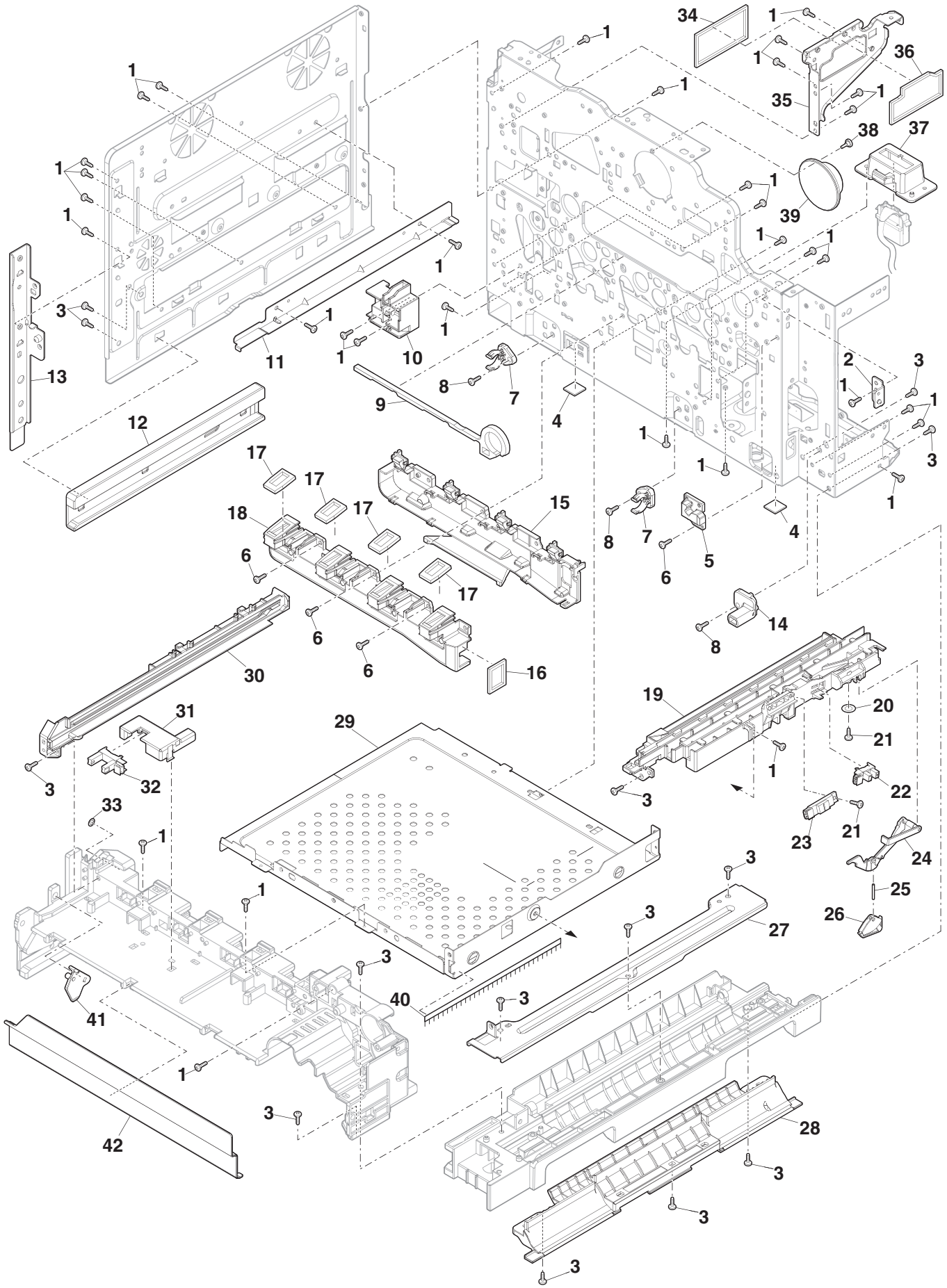

【V31】
ﾌﾚｰﾑ部 2(Frame section 2)

NO.	PARTS CODE	PRICE RANK Ex.	PRICE RANK Ja.	DESCRIPTION		Inter-change	Reason for change	Effective time
1	XEBS740P10000	AA	DD	Screw(4×10)	ﾋﾞｽ			
2	XHBS730P06000	AC	DD	Screw(3×6)	ﾋﾞｽ			
3	LPLTM0715QSZZ	AM	EG	Reactle fixing plate	ﾘｱｸﾄﾙ取付板			
4	XEBS730P10000	AC	DD	Screw(3×10)	ﾋﾞｽ			
5	LDAiZ0090QSZZ	AY	FQ	Operation base plate	操作台板			
6	LPLTM1053QSZZ	AW	FG	Oparation base fixing plate	操作台板補強板			
7	LPLTM1047QSZZ	AY	FQ	Scanner right rear plate	ｽｷｬﾅｰ右後ﾌﾟﾚｰﾄ			
8	DUNT-1483USZZ	AY	FQ	Hinge plate	ﾋﾝｼﾞﾌﾟﾚｰﾄ			
9	LSTYM0013QSZ4	AZ	FX	Scanner stay	ｽｷｬﾅｽﾃｲ			
10	PBRSS0040QSZZ	AF	DS	Delivery discharge brush	排紙除電ﾌﾞﾗｼ			
11	LPLTM1049QSZZ	AZ	FQ	Scanner right front plate	ｽｷｬﾅｰ右前ﾌﾟﾚｰﾄ			
12	XHBS740P08000	AA	DD	Screw(4×8)	ﾋﾞｽ			
13	LPLTM0710QSZZ	AG	DX	Operation panel reinforce plate	操作ﾊﾟﾈﾙ補強板			
14	LFRM-0191QSZZ	BA	FX	Rear frame upper	後ﾌﾚｰﾑ上			
15	XEPS723P12000	AA	DD	Screw(2.3×12)	ﾋﾞｽ			
16	LHLDZ0353QSZZ	AW	FG	Right door interlock holder	右ﾄﾞｱｲﾝﾀｰﾛｯｸﾎﾙﾀﾞｰ			
17	LRALP0021QSAZ	AK	DX	Process rail A	ﾌﾟﾛｾｽﾚｰﾙ A			
18	NGERH0348QSZZ	AE	DJ	Delivery gear(22T)	排紙ｷﾞｱ			
19	PGiDM0236QSA2	AN	EG	Fusing guide F	定着ｶﾞｲﾄﾞ F			
20	NGERH0350QSZZ	AD	DJ	Delivery input gear(29T)	排紙入力ｷﾞｱ			
21	LHLDZ0224QSZZ	AE	DS	2nd transfer positioning holder lower R	２次転写位置決めﾎﾙﾀﾞｰ下 R			
22	XHBS730P08000	AB	DD	Screw(3×8)	ﾋﾞｽ			
23	MSPRD0531QSZZ	AD	DD	Paper feed movable paper guide spring	給紙可動ﾍﾟｰﾊﾟｰｶﾞｲﾄﾞｽﾌﾟﾘﾝｸﾞ			
24	PGiDM0219QSZZ	AL	EB	Paper feed upper paper guide	給紙上ﾍﾟｰﾊﾟｰｶﾞｲﾄﾞ			
25	PSHEP0817QSZZ	AC	DD	Paper feed discharger guide sheet	給紙除電ｼｰﾄ			
26	PSHEP0818QSZZ	AC	DD	Paper feed guide sheet	給紙ｶﾞｲﾄﾞｼｰﾄ			
27	XEBS730P08000	AC	DD	Screw(3×8)	ﾋﾞｽ			
28	LPLTM0657QSZ1	AN	EG	Positioning plate front	位置決めﾌﾟﾚｰﾄ前			
29	PSHEP0812QSZZ	AC	DD	TN guide sheet	TN ｶﾞｲﾄﾞｼｰﾄ			
30	MLEVP0158QSZ1	AC	DD	TN lock lever	TN ﾛｯｸﾚﾊﾞｰ			
31	PGiDM0230QSZ2	AQ	EQ	TN guide	TN ｶﾞｲﾄﾞ			
32	LX-BZ0980FCPZ	AA	DD	Blue screw(3×12)	青ﾋﾞｽ			
33	TLABZ5439FCZZ	AA	DJ	MC CL label	MC CL ﾗﾍﾞﾙ			
34	DUNT-1092USZZ	AY	FQ	Waste toner box unit	廃ﾄﾅｰﾎﾞｯｸｽﾕﾆｯﾄ			
⚠ 35	CPWBN2085GS62	AT	EZ	USB Connector PWB(Wireless LAN)	USB ｺﾈｸﾀ基板			
36	DUNT-8962FCP1	BF	GN	USB wireless LAN	USB 無線 LAN			
⚠ 37	CPWBN2085GS61	AT	EZ	USB Connector PWB(Front)	USB ｺﾈｸﾀ基板			
38	PCŌVP0276QSZZ	AX	FG	Inner cover	ｲﾝﾅｰｶﾊﾞｰ			
39	LPLTM0699QSZZ	AL	EB	Main drive fixing plate	ﾒｲﾝ駆動取付板			
40	GCAB-0312QSZZ	AN	EQ	Hinge cover	ﾋﾝｼﾞｶﾊﾞｰ			
41	LHLDZ0216QSZZ	AE	DJ	Fusing connector holder	定着ｺﾈｸﾀｰﾎﾙﾀﾞｰ			
42	TLABH0966QSAZ	AC	DD	Envelope instruction label	封筒指示ﾗﾍﾞﾙ			
43	LBNDZ0009QSZZ	AE	DJ	Right door Band	右ﾄﾞｱﾊﾞﾝﾄﾞ			
44	GCAB-0314QSZZ	AV	FG	Delivery tray upper	排紙ﾄﾚｲ上			
45	XEBS730P06000	AA	DD	Screw(3×6)	ﾋﾞｽ			

【V31】
ﾌﾚｰﾑ部 2(Frame section 2)

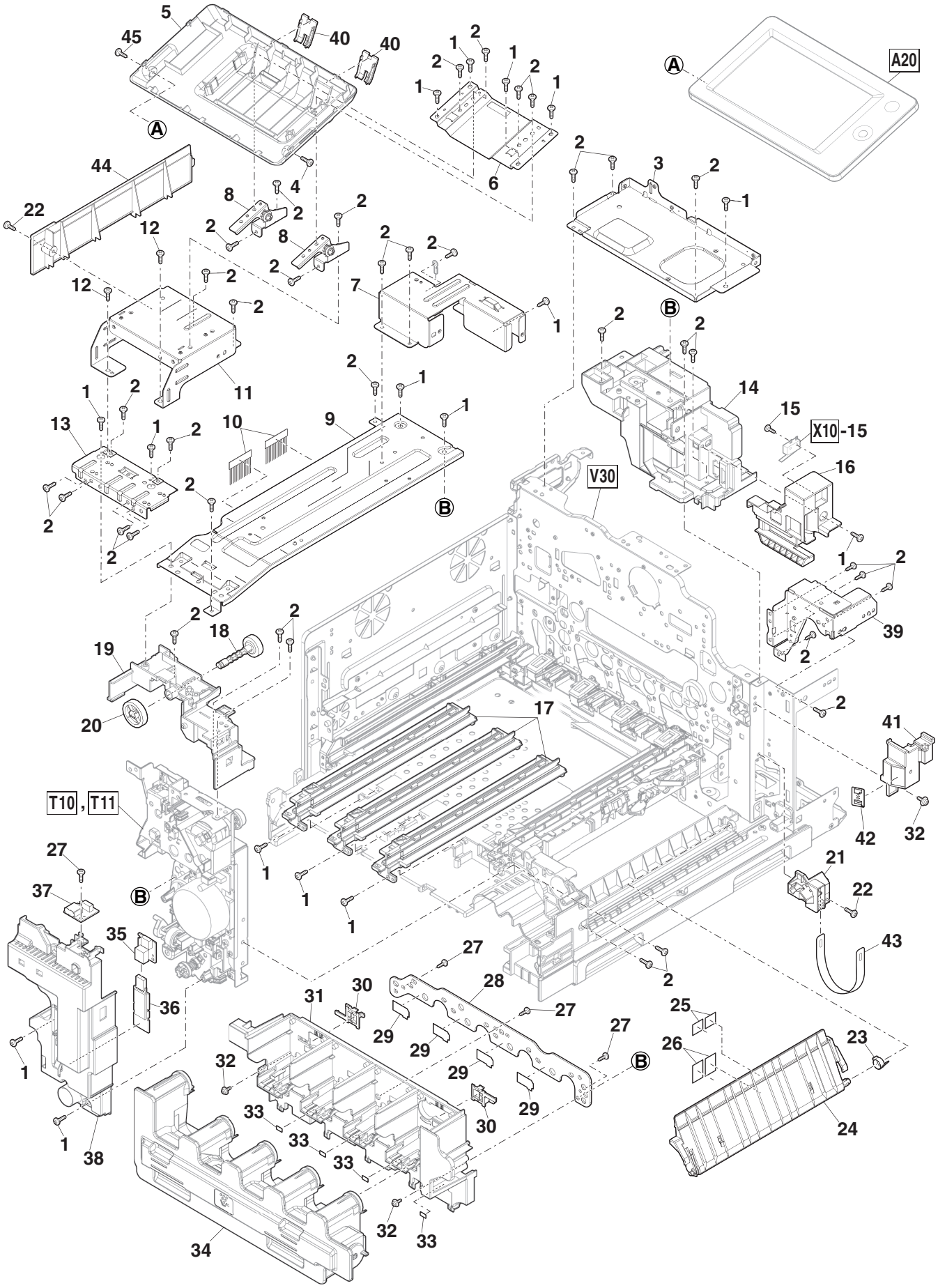

【V32】
後ろﾌﾚｰﾑ部 (Rear frame section)

NO.	PARTS CODE	PRICE RANK Ex.	PRICE RANK Ja.	DESCRIPTION		Inter-change	Reason for change	Effective time
1	XEBS740P10000	AA	DD	Screw(4×10)	ﾋﾞｽ			
2	RMŌTP0081QSPZ	BL	HG	Polygon motor	ﾎﾟﾘｺﾞﾝﾓｰﾀｰ			
3	LPLTM1048QSZZ	AW	FG	Scanner left plate	ｽｷｬﾅｰ左ﾌﾟﾚｰﾄ			
4	XHBS730P06000	AC	DD	Screw(3×6)	ﾋﾞｽ			
5	PDUC-0024QSZZ	AK	DX	Power supply cooling intake duct	電源冷却ﾀﾞｸﾄ			
6	NFANP0029QSPZ	AY	FQ	Fan(80×25)	ﾌｧﾝ			
7	XEBS740P35000	AC	DD	Screw(4×35)	ﾋﾞｽ			
8	PDUC-0028QSZZ	AK	DX	Power supply exhaust intake ductlower	電源排気ﾀﾞｸﾄ下			
9	QSW-C9295QCPZ	AL	EB	Main switch	ﾒｲﾝｽｲｯﾁ			
10	LHLDZ0213QSZ1	AE	DS	High voltage PWB support holder	高圧基板支持ﾎﾙﾀﾞｰ			
11	LPLTM5714FCZZ	AB	DJ	M3 plate	M3 ﾌﾟﾚｰﾄ			
12	LHLDZ0230QSAZ	AH	DX	MC contact holder	MC 接点ﾎﾙﾀﾞｰ			
13	MSPRC0588QSZZ	AC	DD	MC contact spring	MC 接点ｽﾌﾟﾘﾝｸﾞ			
14	XBPS730P08KS0	AB	DD	Screw(3×8KS)	ﾋﾞｽ			
15	LPLTM0719QSZZ	AM	EG	MFPC fixing fixing plate	MFPC 取付固定板			
16	PFiLZ0045QSZZ	AY	FQ	UFP filter	UFP ﾌｨﾙﾀｰ			
17	PMLT-1415FCZ1	AC	DD	Motor soundproofing cushion	ﾓｰﾀｰ防音ﾓﾙﾄ			
18	PDUC-0027QSZZ	AP	EQ	Fusing extension fan duct	定着延長ﾌｧﾝﾀﾞｸﾄ			
19	PMLT-0261QSZZ	AC	DD	Fusing duct cushion	定着ﾀﾞｸﾄﾓﾙﾄ B			
20	PDUC-0022QSZ3	AL	EB	Ozone fan fixing intake duct	ｵｿﾞﾝﾌｧﾝ取付ﾀﾞｸﾄ			
21	PMLT-0223QSZ1	AH	DX	Ozone fan intake duct cushion A	ｵｿﾞﾝﾌｧﾝﾀﾞｸﾄﾓﾙﾄ A			
22	PMLT-0227QSZ1	AK	DX	Ozone intake duct joint cushion A	ｵｿﾞﾝﾀﾞｸﾄ連結ﾓﾙﾄ A			
23	PMLT-0225QSZ1	AL	EB	Ozone fan intake port cushion A	ｵｿﾞﾝﾌｧﾝ吸気口ﾓﾙﾄ A			
24	PMLT-0212QSZZ	AC	DD	Ozone fan harness cushion	ｵｿﾞﾝﾌｧﾝﾊｰﾈｽﾓﾙﾄ			
⚠ 25	CPWBF0083US57	AQ	EQ	Sensor PWB	ｾﾝｻｰ基板			
26	NFANS0130FCPZ	BA	FX	Fan	ﾌｧﾝ			
27	XEBS740P40000	AC	DD	Screw(4×40)	ﾋﾞｽ			
28	PGUMM0024QSZZ	AD	DJ	Protection rubber sheet	防振ｺﾞﾑｼｰﾄ			
29	PFiLZ0034QSZZ	AX	FG	Ozone filter	ｵｿﾞﾝﾌｨﾙﾀｰ			
30	PMLT-0220QSZZ	AD	DD	Ozone fan cushion A	ｵｿﾞﾝﾌｧﾝﾓﾙﾄ A			
31	PMLT-0222QSZ1	AH	DX	Ozone fan cushion C	ｵｿﾞﾝﾌｧﾝﾓﾙﾄ C			
32	PMLT-0221QSZZ	AB	DD	Ozone fan cushion B	ｵｿﾞﾝﾌｧﾝﾓﾙﾄ B			
33	PCŌVP0234QSZZ	AH	DX	Ozone fan intake duct cover	ｵｿﾞﾝﾌｧﾝﾀﾞｸﾄｶﾊﾞｰ			
501	DUNT-1476USZZ	CN	VC	LSU	LSU			

【V32】
後ろﾌﾚｰﾑ部 (Rear frame section)

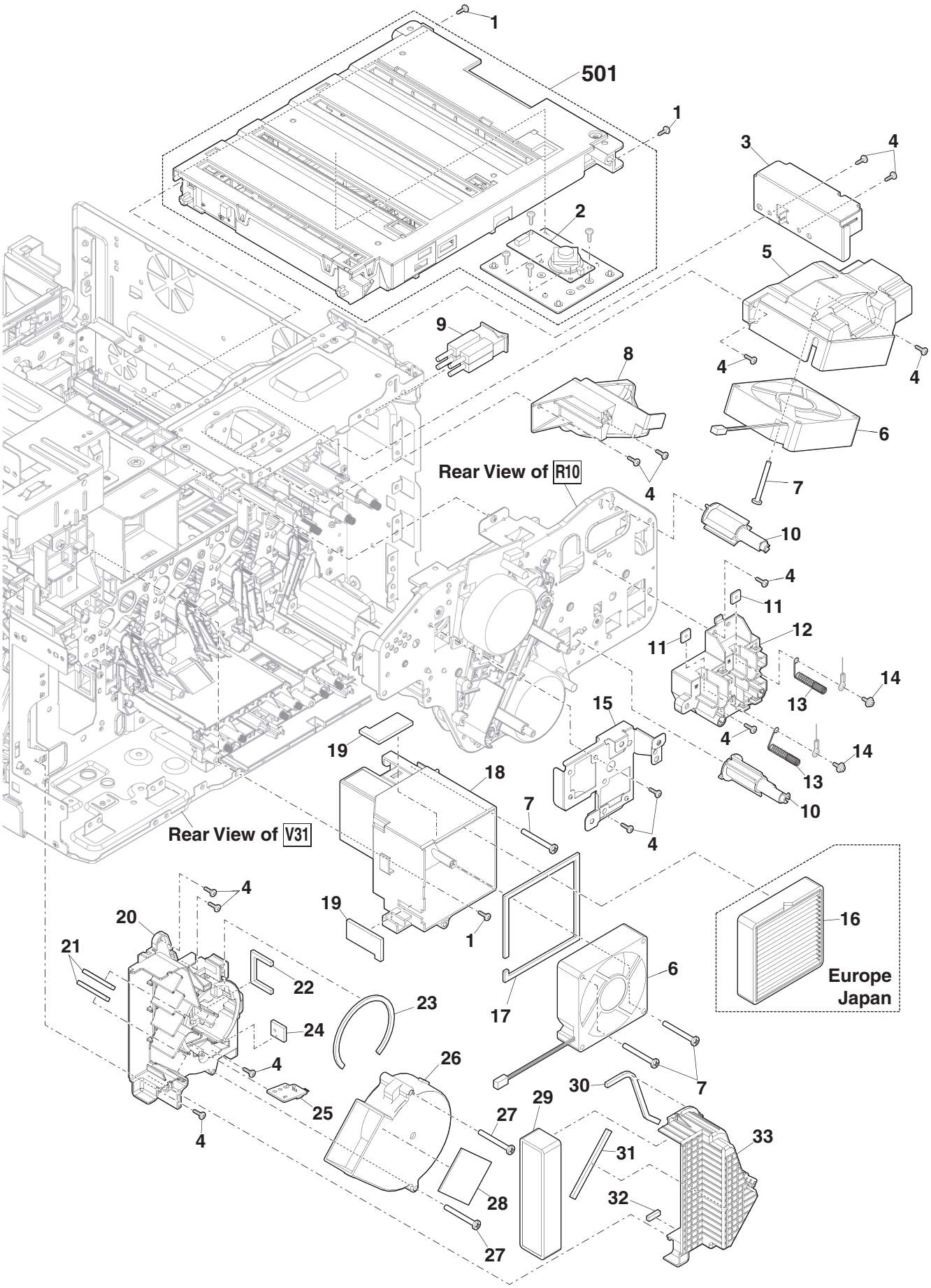

【X10】
ﾊｰﾈｽ部 (Harness section)

NO.	PARTS CODE	PRICE RANK Ex.	PRICE RANK Ja.	DESCRIPTION		Inter-change	Reason for change	Effective time
1	QCNW-0179QSPZ	AW	FG	SATA cable	SATA ｹｰﾌﾞﾙ			
2	QCNW-0178QSPZ	BA	FX	WLAN harness	WLAN ﾊｰﾈｽ			
3	QCNW-0177QSP1	AZ	FQ	F-USB harness	F-USB ﾊｰﾈｽ			
4	QCNW-0181QSPZ	BA	FX	FAX harness	FAX ﾊｰﾈｽ			
5	QCNW-0176QSPZ	BC	GJ	PW-KEY relay harness	PW-KEY 中継ﾊｰﾈｽ			
6	QCNW-0175QSPZ	AW	FG	PW-KEY harness	PW-KEY ﾊｰﾈｽ			
7	QCNW-0182QSPZ	AX	FG	LSU FFC	LSU FFC			
8	QCNW-0150QSPZ	AZ	FX	DL harness	DL ﾊｰﾈｽ			
9	QCNW-0185QSPZ	BB	GD	OPE FFC	OPE FFC			
10	QCNW-0183QSPZ	AQ	EQ	PCU-MFPC FFC	PCU-MFPC FFC			
11	QCNW-0081QSPZ	BH	HC	Key harness	KEY ﾊｰﾈｽ			
12	QCNW-0149QSPZ	BA	FX	DV relay harness	DV 中継ﾊｰﾈｽ			
13	QCNW-0155QSPZ	BD	GN	Process harness	ﾌﾟﾛｾｽﾊｰﾈｽ			
14	DUNT-1479USZZ	AS	EQ	DSW-F harness	DSW-F ﾊｰﾈｽ			
15	DUNT-1482USZZ	AS	EQ	DSW-R harness	DSW-R ﾊｰﾈｽ			
16	QCNW-0162QSPZ	AV	FG	Right door harness	右ﾄﾞｱﾊｰﾈｽ			
17	DHAi-0759QSP1	BF	GN	Manual paper feed harness	手差しﾊｰﾈｽ			
18	QCNW-0153QSPZ	AQ	EQ	TH PWB harness	TH 基板ﾊｰﾈｽ			
19	QCNW-0170QSPZ	AV	FG	1TUD harness	1TUD ﾊｰﾈｽ			
20	QCNW-0158QSPZ	AW	FG	Delivery harness	排紙ﾊｰﾈｽ			
21	QCNW-0154QSPZ	AX	FG	Regist harness	ﾚｼﾞﾊｰﾈｽ			
22	QCNW-0157QSPZ	AY	FQ	Main drive harness	ﾒｲﾝ駆動ﾊｰﾈｽ			
23	QCNW-0151QSPZ	AY	FQ	Transport drive harness	搬送駆動ﾊｰﾈｽ			
24	QCNW-0172QSPZ	AY	FQ	Delivery drive harness	排紙駆動ﾊｰﾈｽ			
25	QCNW-0173QSPZ	AR	EQ	High voltage PWB harness	高圧基板ﾊｰﾈｽ			
26	DHAi-0762QSP1	BL	HL	MC harness	MC ﾊｰﾈｽ			
27	QCNW-0168QSPZ	AY	FQ	HL relay harness	HL 中継ﾊｰﾈｽ			
28	QCNW-0161QSPZ	AX	FG	Fusing TH harness	定着 TH ﾊｰﾈｽ			
29	QCNW-0174QSPZ	AR	EQ	Fusing TH relay harness	定着 TH 中継ﾊｰﾈｽ			
30	QCNW-0166QSPZ	AT	EZ	MSW harness	MSW ﾊｰﾈｽ			
31	QCNW-0165QSPZ	AZ	FX	Inlet unit harness	ｲﾝﾚｯﾄﾕﾆｯﾄﾊｰﾈｽ			
32	QCNW-0167QSPZ	AR	EQ	ACDC harness	ACDC ﾊｰﾈｽ			
33	QCNW-0169QSPZ	BC	GD	DC harness	DC ﾊｰﾈｽ			
34	QCNW-0096QSP1	BB	GD	Home sensor cable	ﾎｰﾑｾﾝｻｰｹｰﾌﾞﾙ			
35	QCNW-0097QSPZ	BB	GD	Gnd wire	ｱｰｽﾜｲﾔｰ			
36	QCNW-0095QSPZ	BB	GD	CCD FFC	CCD FFC			
37	QCNW-0184QSPZ	AR	EQ	SCN FFC	SCN FFC			
38	QCNW-0098QSP1	BB	GD	Sppd harness	SPPD ﾊｰﾈｽ			
39	QCNW-0114QSP1	BB	GD	Sensor cable	ｾﾝｻｰｹｰﾌﾞﾙ			
40	QCNW-0099QSP1	BD	GN	RSPF SPPD harness	RSPF SPPD ﾊｰﾈｽ			
41	QCNW-0100QSPZ	BE	GN	ADF harness	ADF ﾊｰﾈｽ			
42	QCNW-0105QSPZ	AX	FQ	CIS FFC	CIS FFC			
43	QCNW-0104QSP1	AZ	FX	Paper feed harness	給紙ﾊｰﾈｽ			
44	QCNW-0102QSP1	BB	GD	Base sensor harness	ﾍﾞｰｽｾﾝｻｰﾊｰﾈｽ			
45	QCNW-0103QSP1	AY	FQ	Transport harness	搬送ﾊｰﾈｽ			
46	QCNW-0101QSPZ	BB	GD	Motor clutch harness	ﾓｰﾀｰｸﾗｯﾁﾊｰﾈｽ			
47	QCNW-0152QSPZ	AY	FQ	Desk relay harness	ﾃﾞｽｸ中継ﾊｰﾈｽ			

【X10】
ﾊｰﾈｽ部 (Harness section)

MFPC,FAX,USB

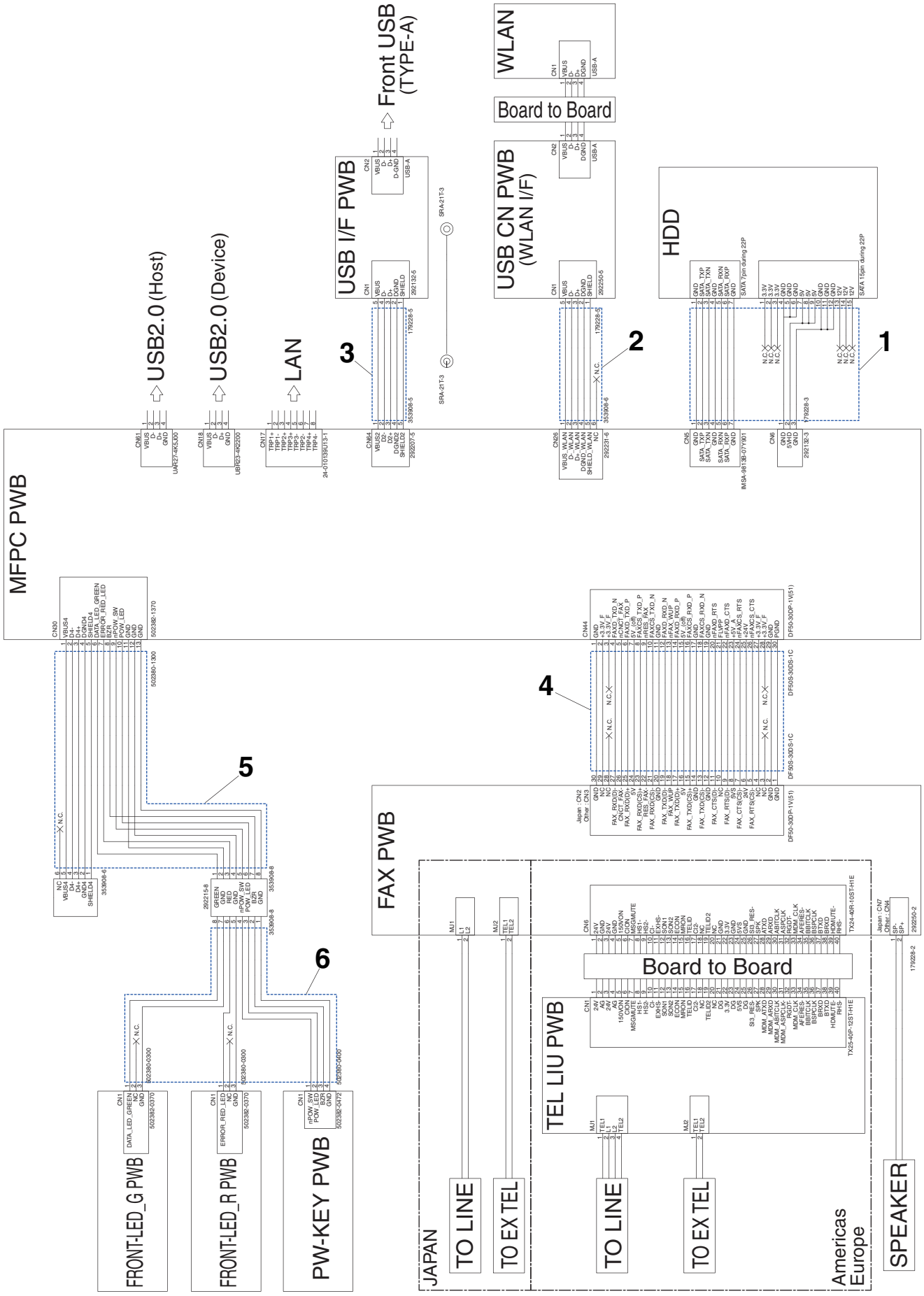

【X10】

ﾊｰﾈｽ部 (Harness section)

LSU, 操作ﾊﾟﾈﾙ (LSU,Operation panel)

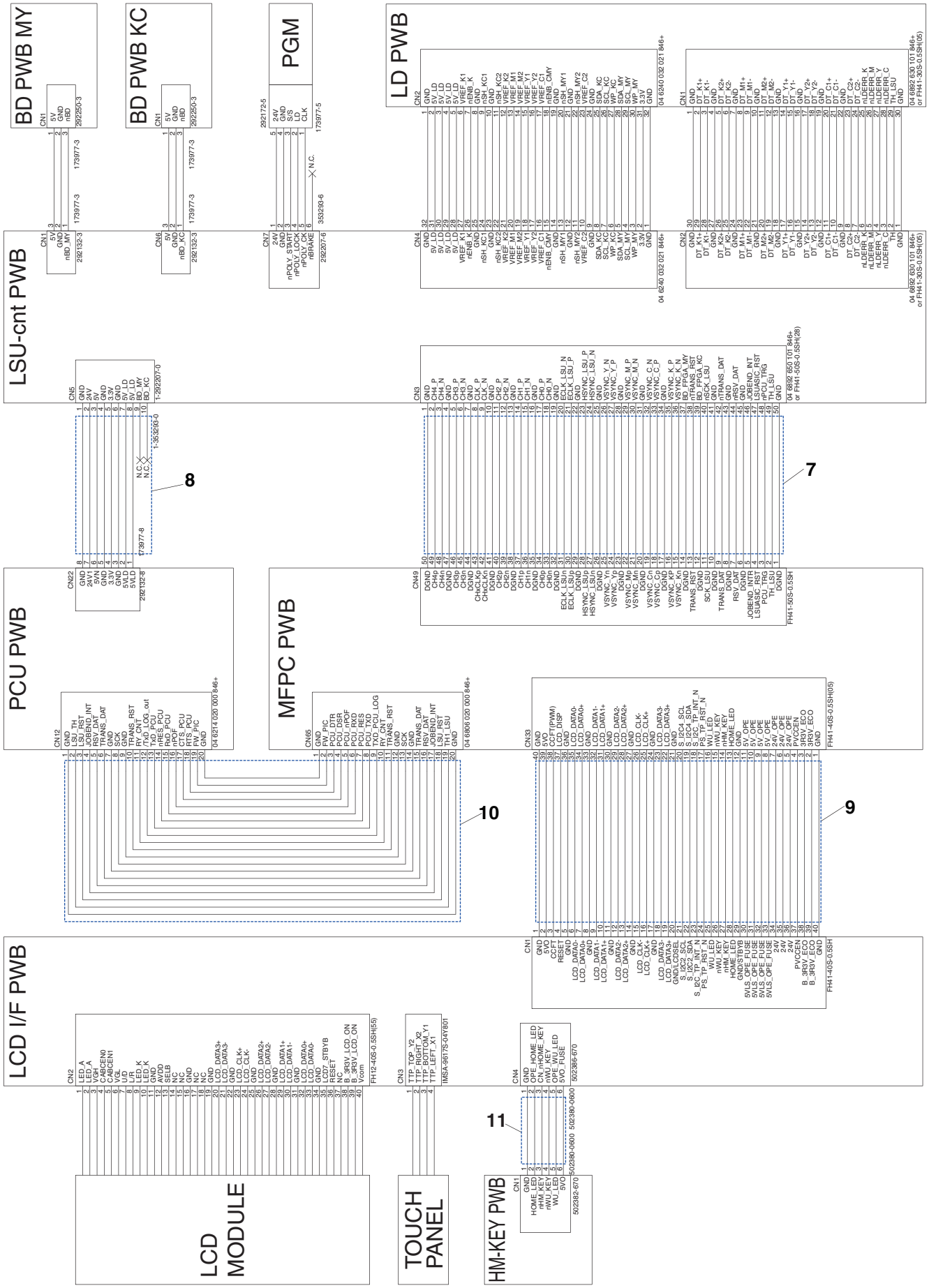

【X10】

ﾊｰﾈｽ部 (Harness section)

ﾌﾟﾛｾｽ ,DV, 右ﾄﾞｱ , 排紙 (Process,DV,Right door,Delivery)

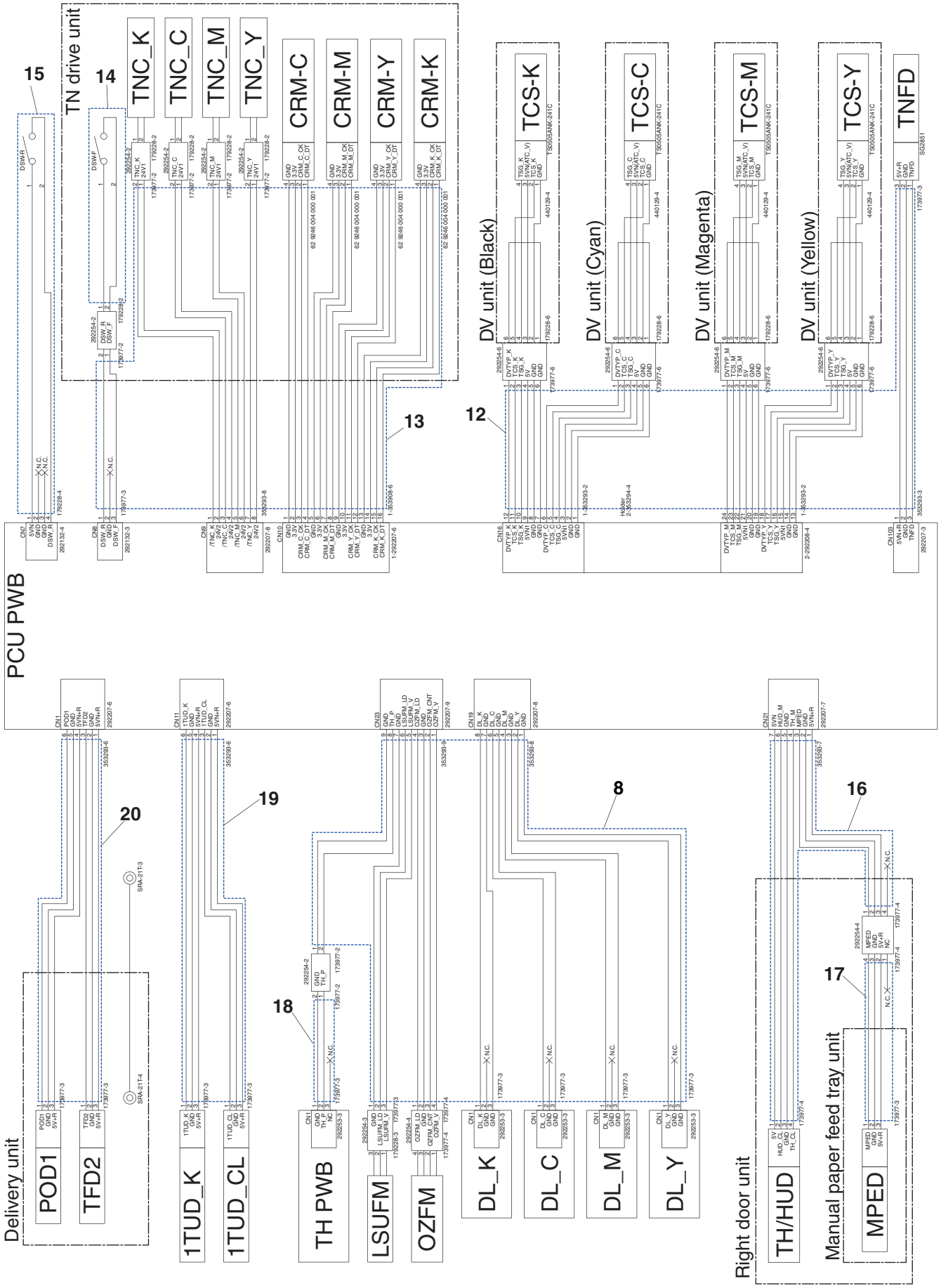

【X10】

ﾊｰﾈｽ部 (Harness section)

駆動 , ﾚｼﾞｽﾄｾﾝｻｰ , 給紙 , 高圧 (Drive,Resist sensor, Paper feed,High voltage)

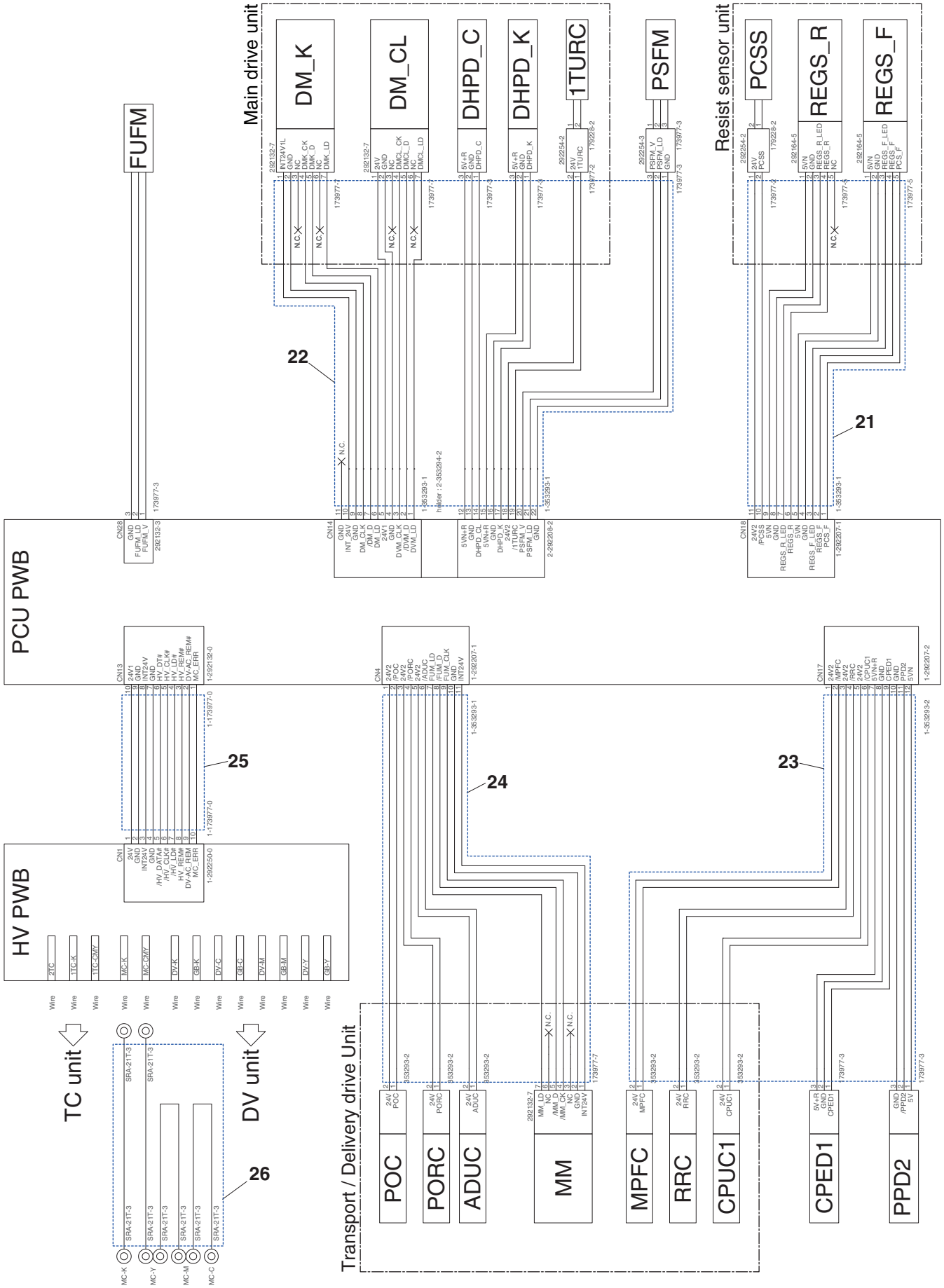

【X10】

ﾊｰﾈｽ部 (Harness section)

電源 , 定着 (Power supply,Fusing)

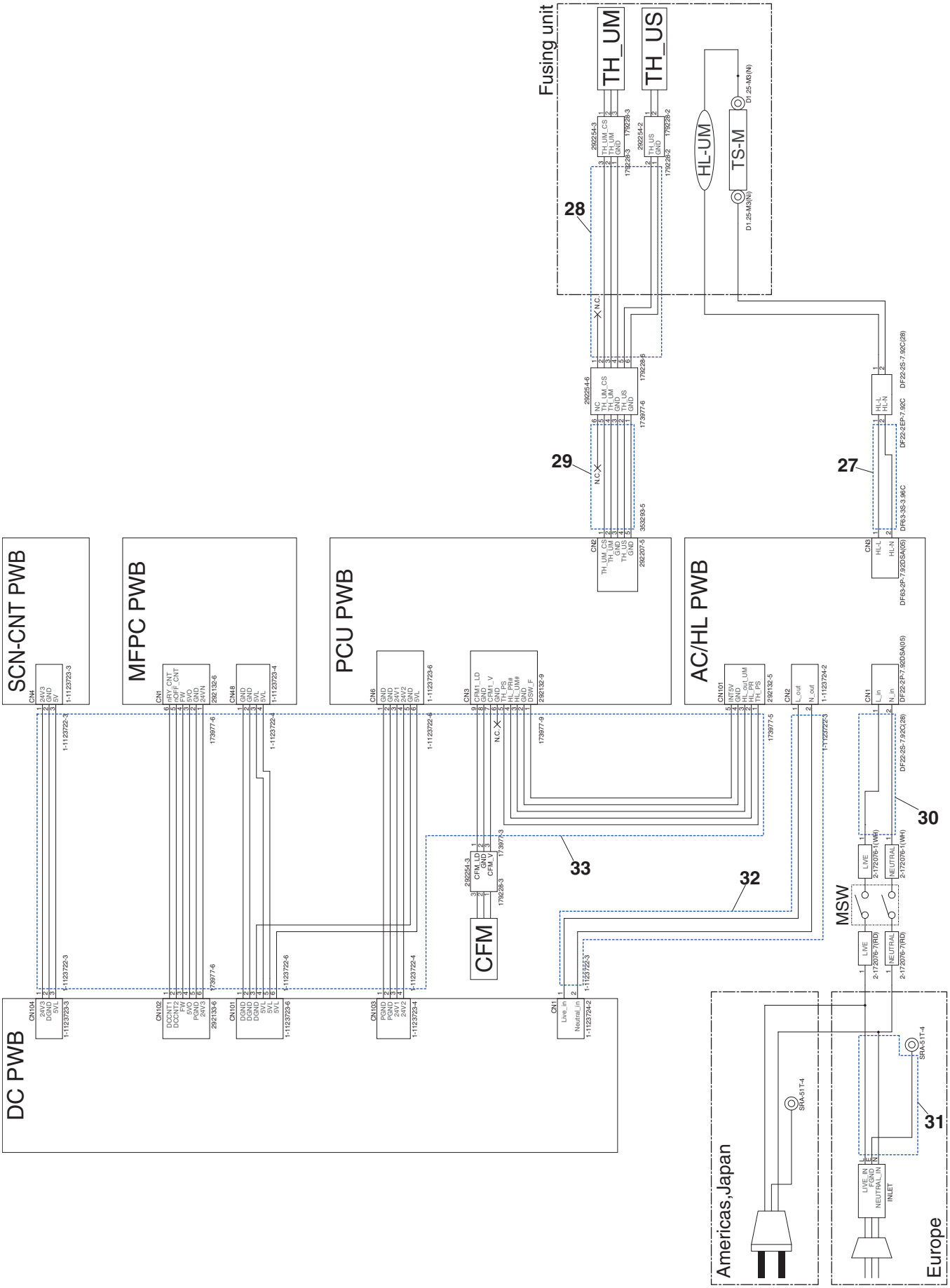

【X10】

ﾊｰﾈｽ部 (Harness section)

ｽｷｬﾅ (Scanner)

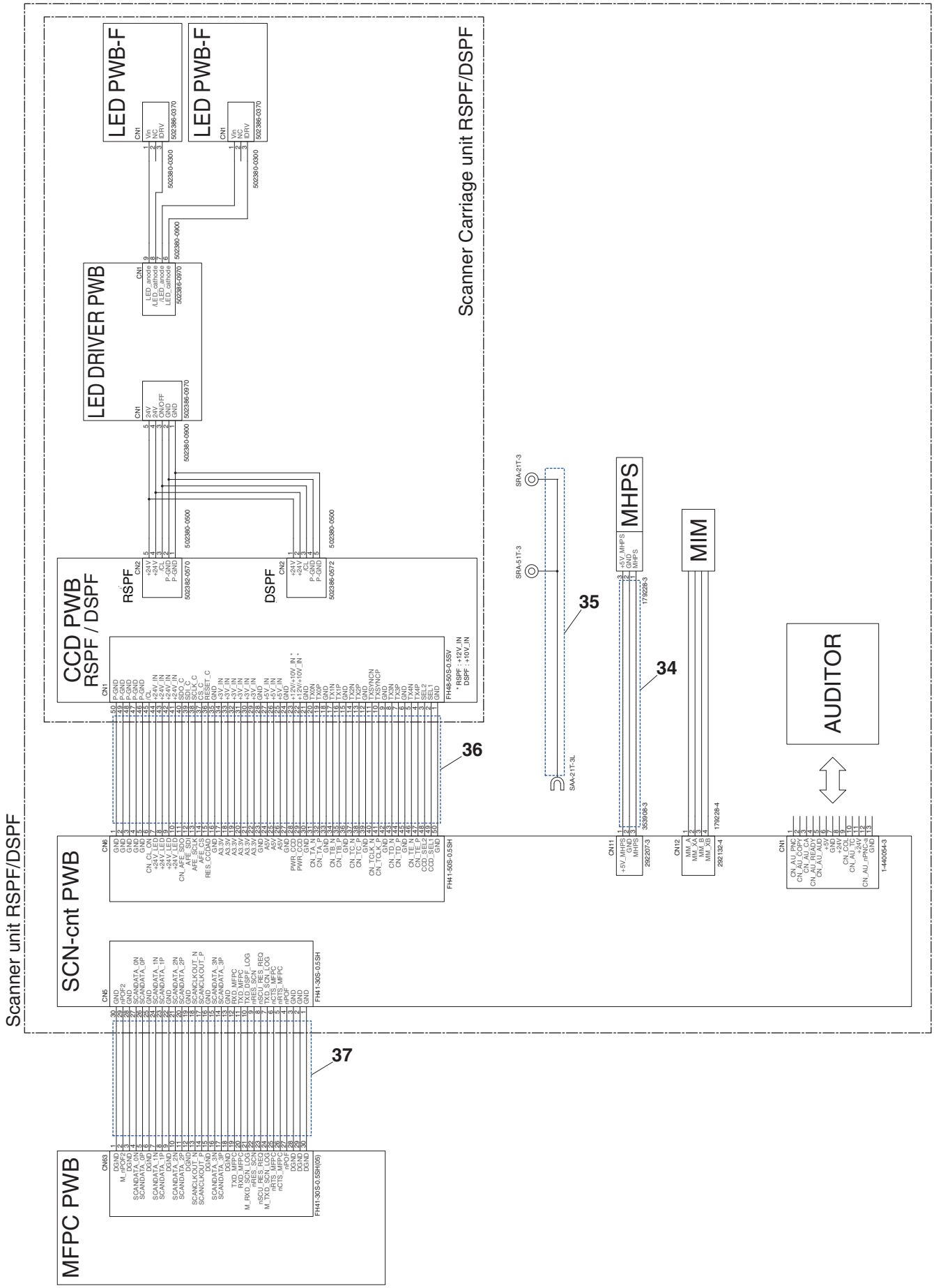

【X10】

ﾊｰﾈｽ部 (Harness section)

DSPF,RSPF

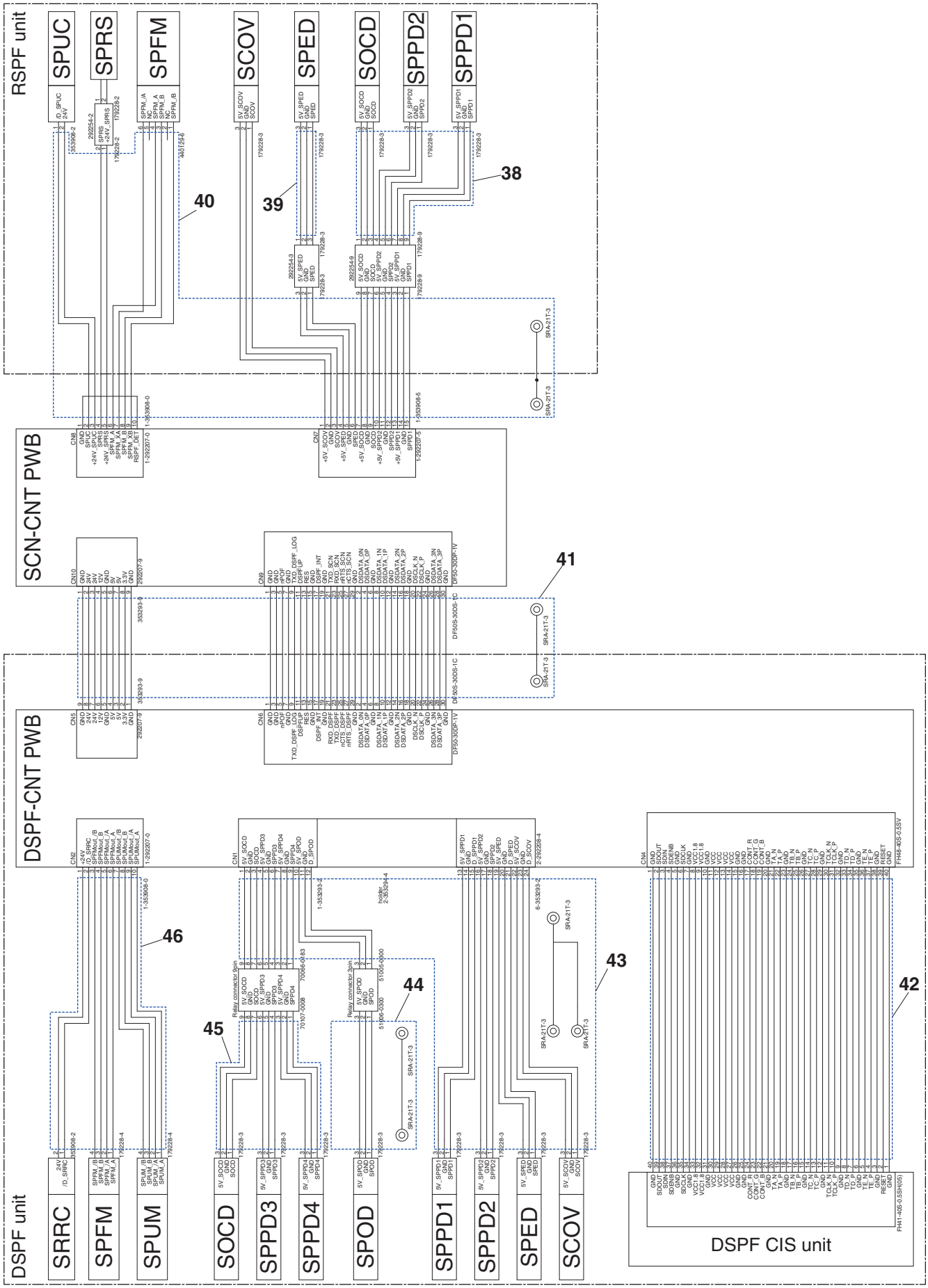

【X10】
ﾊｰﾈｽ部 (Harness section)

Option

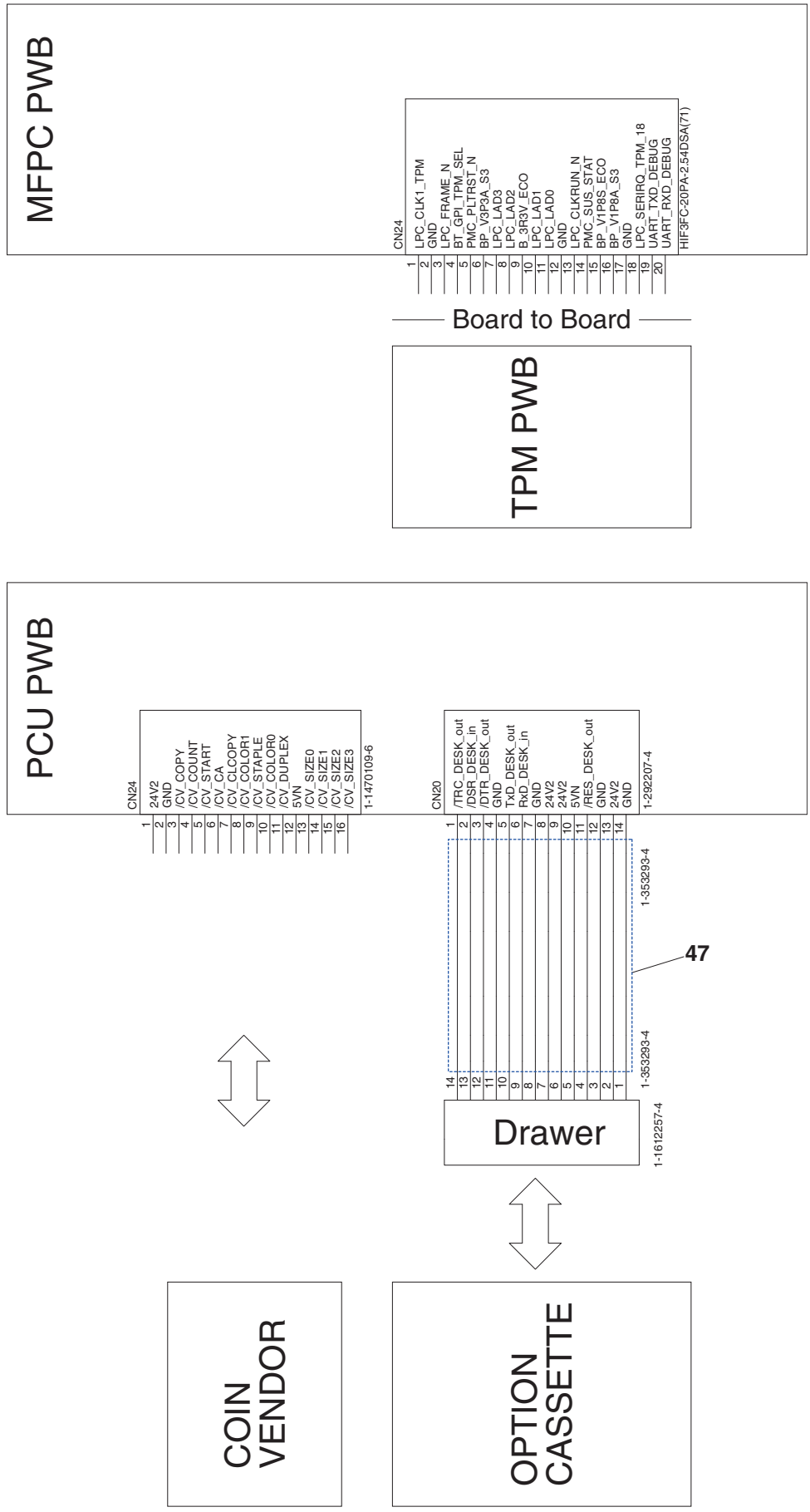

【X40】

ﾜｲﾔｰｻﾄﾞﾙ , ｺｱ (Wire saddle,Core)

NO.	PARTS CODE	PRICE RANK Ex.	PRICE RANK Ja.	DESCRIPTION		Inter-change	Reason for change	Effective time
1	ＬＢＮＤＪ００３７ＦＣＺ１	AA	DJ	Band(T18S)	ﾊﾞﾝﾄﾞ			
2	ＬＢＮＤＪ００９９ＦＣＰＺ	AC	DJ	Clamp(N-4)	ﾅｲﾛﾝｸﾗﾝﾌﾟ			
3	ＬＨＬＤＷ０２６５ＱＳＰＺ	AD	DJ	Clamp(FCR-35 V0)	ｸﾗﾝﾌﾟ			
4	ＬＨＬＤＷ１６２０ＦＣＺＺ	AC	DJ	Edge holder(11U)	ｴｯｼﾞﾎﾙﾀﾞｰ			
5	ＬＨＬＤＷ２０３７ＦＣＰＺ	AC	DJ	Clamp(RMS-1V0)	ｸﾗﾝﾌﾟ			
6	ＬＨＬＤＷ２０３８ＦＣＰＺ	AC	DJ	Clamp(RMS-2)	ｸﾗﾝﾌﾟ			
7	ＬＨＬＤＷ２０６６ＳＣＺＺ	AB	DD	Wire saddle(WS-3NS)	ﾜｲﾔｰｻﾄﾞﾙ			
8	ＬＨＬＤＷ２３７３ＦＣＰＺ	AB	DD	Clamp(GRBWS-0306E-V0)	ｸﾗﾝﾌﾟ			
9	ＬＨＬＤＷ２３７６ＦＣＰＺ	AC	DD	Clamp(GRBWS-0911E-V0)	ｸﾗﾝﾌﾟ			
10	ＬＨＬＤＷ２３７７ＦＣＰＺ	AC	DD	Wire saddle(GRBWS-1212E)	ﾜｲﾔｰｻﾄﾞﾙ			
11	ＲＣＯＲＦ００２１ＱＳＺＺ	AK	DX	Core(UF-70)	ｺｱ			
12	ＲＣＯＲＦ００３４ＱＳＺＺ	AF	DS	Core(GSSC-40-12)	ｺｱ			
13	ＲＣＯＲＦ００６５ＦＣＰＺ	AH	DX	Ferrite core(GRFC-8)	ﾌｪﾗｲﾄｺｱ			

【X40】

ﾜｲﾔｰｻﾄﾞﾙ , ｺｱ (Wire saddle,Core)

1

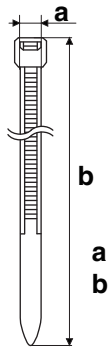

a : 4.2mm
b : 80mm

2

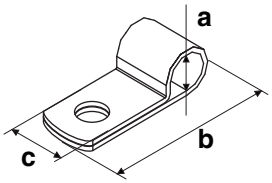

a : 6.8mm
b : 23.7mm
c : 11.1mm

3

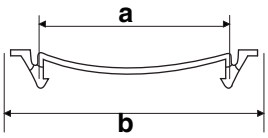

a : 35mm
b : 47mm

4

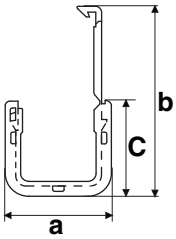

a : 18mm
b : 31.4mm
C : 11.1mm

5

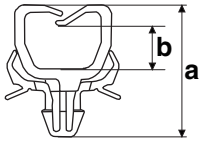

a : 12.8mm
b : 4.2mm

6

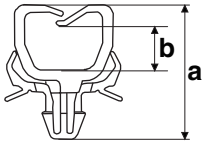

a : 14.8mm
b : 6.2mm

7

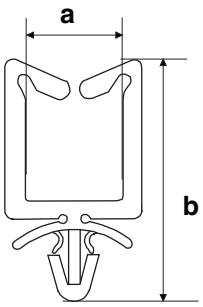

a : 11.1mm
b : 35.4mm

8

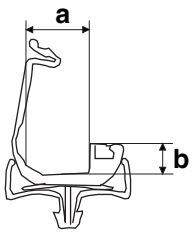

a : 5.7mm
b : 2.5mm

9

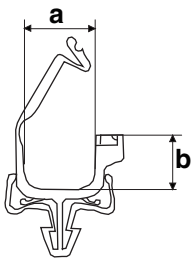

a : 11mm
b : 8.5mm

10

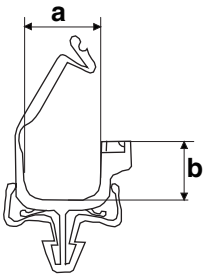

a : 12mm
b : 12mm

11

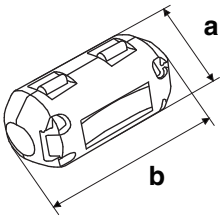

a : 17mm
b : 30mm

12

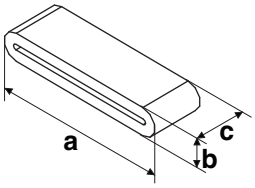

a : 40mm
b : 6.5mm
c : 12mm

13

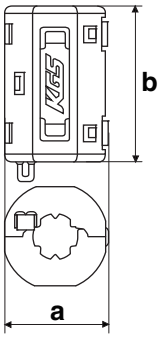

a : 20.4mm
b : 31.5mm

【X50】

付属品 (Accessories)

NO.	PARTS CODE	PRICE RANK		DESCRIPTION	Inter-change	Reason for change	Effective time
		Ex.	Ja.				
1	CDSKA0386QS31	AT	EZ	CD-ROM [Japan] CD-ROM			

SHARP

SHARP CORPORATION
Business Solutions BU
First edition : December 2018