SHARP PARTS GUIDE

CODE:00ZMXB455WP02A

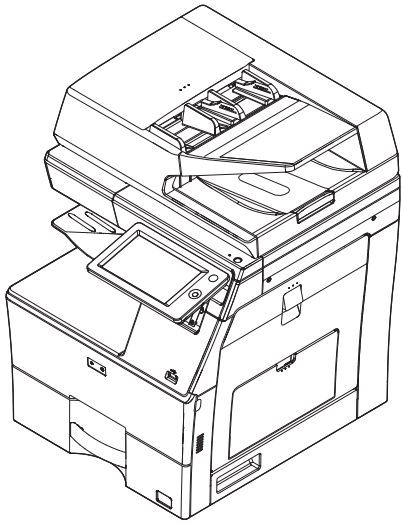

デジタル複合機
DIGITAL MULTIFUNCTIONAL SYSTEM

MODEL

[IT Model]
MX-B455W/MX-B455WZ
MX-B355W/MX-B355WZ

[MFP Model]
MX-B450W/MX-B450FZ/AR-B451F
MX-B450Z/AR-B451T
MX-B350W/AR-B350W/MX-B350FZ
AR-B351FT/MX-B350Z/AR-B351T

[PRINTER Model]
MX-B450P
MX-B451PZ/AR-B453PT
MX-B350P/MX-B350PZ
MX-B351PZ/AR-B353PT

このパーツガイドに掲載されている表示価格ランクは消費税抜きです。

CONTENTS

SHARP CORPORATION

仕向地インデックス (Destination index)

マトリックスに記載している地域名について、各々の国がどの地域に該当するかは、下記表を参照する事。

Regarding the name of regions listed on matrix, refer to the table below to figure out which country belongs to which region.

Classification by the large area (大分類)	Classification by the small area (小分類)	Country(国)	Classification by the voltage	Classification by the Paper standard
Japan(日本)	Japan(日本)	Japan(日本)	100V	AB series
Americas	Americas 1	U.S.A. / Canada / Mexico / LAG(120V)	120V	Inch series
Europe	Europe 1	Germany / Spain / France / Italy / The Netherlands / Switzerland	220-240V	AB series
		U.kingdom	220-240V	AB series
		Sweden / Denmark / Finland / Norway	220-240V	AB series
	Europe 2	Greek / Cyprus / Turkish / Polish / Hungarian / Czech / Slovak	220-240V	AB series
		Romania / Latvia / Portugal	220-240V	AB series
Australia	Australia	Australia / New Zealand	220-240V	AB series
Asia	Asia 1	Hong Kong / Thailand	220-240V	AB series
	Asia 2	Singapore / Malaysia / Vietnam / Indonesia / Myanmar / Cambodia Bangladesh / Sri Lanka	220-240V	AB series
	Asia 4	Yemen / Saudi Arabia / Bahrain / Kuwait / UAE / Oman / Qatar	220-240V	AB series
	Asia 5	Egypt / Jordan / Nigeria / West africa	220-240V	AB series
	Asia 6	Tunisia / Morocco	220-240V	AB series
	Asia 7	Lebanon / Pakistan	220-240V	AB series
Class B	Class B	South Africa / Namibia	220-240V	AB series

Note for use of Parts Guide

◎ How to see the parts guide:

・For the parts that the parts number in the parts list is 900s, it represents the entire unit. For the parts that the parts number in the parts list is 500s, it represents the sub unit (a part of the unit in the unit).
・If there is no enclosure line showing the range of the unit, all parts illustrated on that page are contained in the unit.
・However, the parts with the void number are excluded from the unit.
・Parts with “N” listed in NEW MARK section represent the new parts that have never been listed in any Parts Guides issued in the past However, even the parts with no “N” mark could be the new parts as the products taken up may differ depending on the countries.
・Parts with “*” listed in PRICE RANK are procured by SMF(Sharp Manufacturing France S.A.).
When the service parts are required, please contact the local SHARP subsidiary.
・Parts with ” ♣ ” mark has Matrix table by destination.
・Parts code with ” ◆ ” mark is the dedicated parts code for Service.

◎ Note when replacing the parts

Be sure to use the autorized parts to assure the safety and reliability.
Since the parts marked with "⚠" is indispensable for the machine safety maintenance and operation, it must be replaced with the parts specific to the product specification.

◎ Definition of PART RANK

Rank indicating the importance level of the parts is listed in PART RANK section.
The purpose of this rank is to help the stock control of the repair parts in the fields to be appropiately managed.

Rank A : Maintenance parts, and consumable parts which are not included in but closely related to maintenance parts
Rank B : Performance/function parts (sensors, clutches, and other electrical parts), consumable parts
Rank E : Unit parts including PWB
Rank D : Preparation parts (External fitting, packing, parts packed together)
Rank C : Parts other than the above (excluding sub components of PWB)

◎ Information about the design change

・New & Addition, Change, Abolition, and Quantity change are expressed with the marks shown in the table below, and those marks are listed at the left side of Part code and also the number section in the illustration.

New & Addition	N	Abolition	☒	Q'uantity (increase) Other	☆
Change	↻	Correction	C	Q'uantity (decrease)	★

◎ Implementation timing of design change

・The time that the design change is implemented is listed in Effective time section.
・If “RC: Running Chane” is listed after the date of Effective time, the parts are replaced with the new parts when the old parts are depleted after the effective time.
*17/Oct RC: it indicates that the parts was replaced in mid-October 2017 production or later.

◎ Interchanegeability of the parts at the time of design change

・Interchangeability between the old and new parts when the design change is implemented is expressed by No1~6 as shown in Interchange section.

1	Interchangeable
2	Current type can be used in place of new type. New type cannot be used in place of current type.
3	Current type cannot be used in place of new type. New type can be used in place of current type.
4	Not interchangeable
5	Interchangeable if replaced with same types of related parts in use.
6	Others

◎ Reason of the design change

・The purpose of the design change is listed in Reason for change section.
・If No. of Technical Report is listed in Reason for change section, please refer to the applicable Technical Report for the detail.

パーツガイド活用時の注意事項

◎パーツガイドの見方

・パーツリストの No. が 900 番台となっているパーツは、unit 全体を表します。また、No. が 500 番台となっているパーツは、サブユニット（ユニットの中の一部のユニット）となります。
・ユニットの範囲を表す囲み線が無い場合は、そのページに記載されているパーツ全てが、ユニットに含まれます。
・但し、ナンバーが白抜きのパーツは、ユニットのなかに含まれません。
・新部品マークの欄に「N」と記載されているパーツは、過去に発行されたパーツガイドに一度も記載された事の無い新規パーツである事を意味します。
　但し、販売店によって取り上げられている製品が異なる場合がある為、「N」と記載されていないパーツでも、新規パーツとなる場合があります。
・♣マークがあるパーツは、仕向地別 Matrix 表があることを意味しています。
・◆マークがあるパーツは、サービス専用のパーツコードであることを意味しています。

◎パーツ交換時の注意事項

安全性・信頼性確保のため、部品は、必ず正規のものをご使用下さい。
⚠ 印の部品は、安全上重要な部品です。交換をする時は、安全及び性能維持のため必ず指定の部品をご使用下さい。

◎パーツのランク付

パーツランクの欄には、パーツの重要度を示すランクを記載しています。
このランクは、市場における補修部品の在庫管理が、適正に運営出来る手助けとなることを、目的とします。
　A ランク: メンテナンスパーツ、メンテナンスパーツには入っていないがメンテナンスパーツに近い消耗パーツ
　B ランク: 性能・機能パーツ（センサー、クラッチ等の電気パーツ）、消耗パーツ
　E ランク: 基板を含むユニットパーツ
　D ランク: 整備パーツ（外装、パッキング、同梱パーツ）
　C ランク: 上記ランク以外のパーツ（基板の子部品を除いたもの）

◎設計変更に関する情報

・部品の追加・変更・廃止・員数の増減等の変更は、下表のマークで表現しており、パーツコードの左側、また、イラストのナンバー部分に記載しています。

新規追加	N	廃　　止	☒	員数増・その他	☆
変　　更	♻	パーツ修正	C	員数減	★

◎設計変更の実施時期

・設計変更が実施された時期については、変更月の欄に記載しています。
・実施時期の年月の後に、「RC: ランニングチェンジ」として記載している場合は、実施時期以降に旧部品在庫が無くなった時点で新部品に切り替えられています。
　※17/Oct RC：2017 年 10 月生産途中以降に変更されたことを意味します

◎設計変更時のパーツの互換性

・設計変更を行った場合の新旧部品の互換性は、互換性の欄に記載しており、下表の通り、No.1 ～ 6 で表現しております。

1	新・旧の互換性有り。
2	新の代わりに旧は使用可。 旧の代わりに新は使用不可。
3	新の代わりに旧は使用不可。 旧の代わりに新は使用可。
4	新・旧の互換性無。
5	旧 (a,b,c…) どうし一対、又は、新 (a,b,c…) どうし一対で、互換性有。
6	その他

◎設計変更の理由

・設計変更を行った目的については、変更理由の欄に記載しています。
・変更理由の欄に Service Information/Technical Report のナンバーが記載されている場合は、その Service Information/Technical Report にて変更内容をご確認下さい。

【001】
外装 1 (Exteriors 1)[IT Model]

NO.	PARTS CODE	PRICE RANK Ex.	PRICE RANK Ja.	DESCRIPTION		Inter-change	Reason for change	Effective time
1	XEBS730P10000	AC	DD	Screw(3×10)	ﾋﾞｽ			
2	GCAB-0274QSZZ	BB	GD	Rear cabinet upper	後ｷｬﾋﾞ上			
3	GCAB-0279QSZZ	AX	FQ	Scanner right cover	ｽｷｬﾅｰ右ｶﾊﾞｰ			
4	GCŌV-0160QSZZ	AX	FQ	Scanner lower right cover	ｽｷｬﾅｰ右下ｶﾊﾞｰ			
5	CPWBF0335QS51	AX	FX	PW key PWB	PW key 基板			
6	CBTN-0322FC02	AR	EQ	Power key	電源ｷｰ			
7	PLNS-0105FCAZ	AC	DJ	PS key lens	電源ｷｰﾚﾝｽﾞ			
8	GCAB-0280QSZZ	AX	FQ	Scanner right cover lower front	ｽｷｬﾅｰ右下ｶﾊﾞｰ下前			
9	CPWBF2195FC54	AT	EZ	LED R PWB	LED R 基板			
10	PLNS-0031QSZZ	AR	EQ	LED lens	LED 用ﾚﾝｽﾞ			
11	CCŌV-0158QS51	BB	GD	LED lens cover	LED ﾚﾝｽﾞｶﾊﾞｰ			
12	GCAB-0276QSZZ	AY	FQ	Scanner front cover lower right	ｽｷｬﾅｰ前ｶﾊﾞｰ下右			
13	CPWBF2195FC53	AT	EZ	LED G PWB	LED G 基板			
14	GCAB-0278QSZZ	AX	FQ	Scanner front cover lower left	ｽｷｬﾅｰ前ｶﾊﾞｰ下左			
15	CCAB-0275QS01	BK	HG	Scanner front cover upper right	ｽｷｬﾅｰ前ｶﾊﾞｰ上右			
♣	CCAB-0275QS02	AZ	FX	Scanner front cover upper right	ｽｷｬﾅｰ前ｶﾊﾞｰ上右			
16	GCAB-0277QSZZ	AX	FQ	Scanner front cover upper left	ｽｷｬﾅｰ前ｶﾊﾞｰ上左			
17	XEBS740P10000	AA	DD	Screw(4×10)	ﾋﾞｽ			

Matrix

No.15	ｽｷｬﾅｰ前ｶﾊﾞｰ上右 (Scanner front cover upper right)	
PARTS CODE	Americas Europe Australia Hong Kong Class B	Japan
CCAB-0275QS01	1st Lot	
CCAB-0275QS02		1st Lot

Update : 2018/Nov/9

【001】
外装 1 (Exteriors 1)[IT Model]

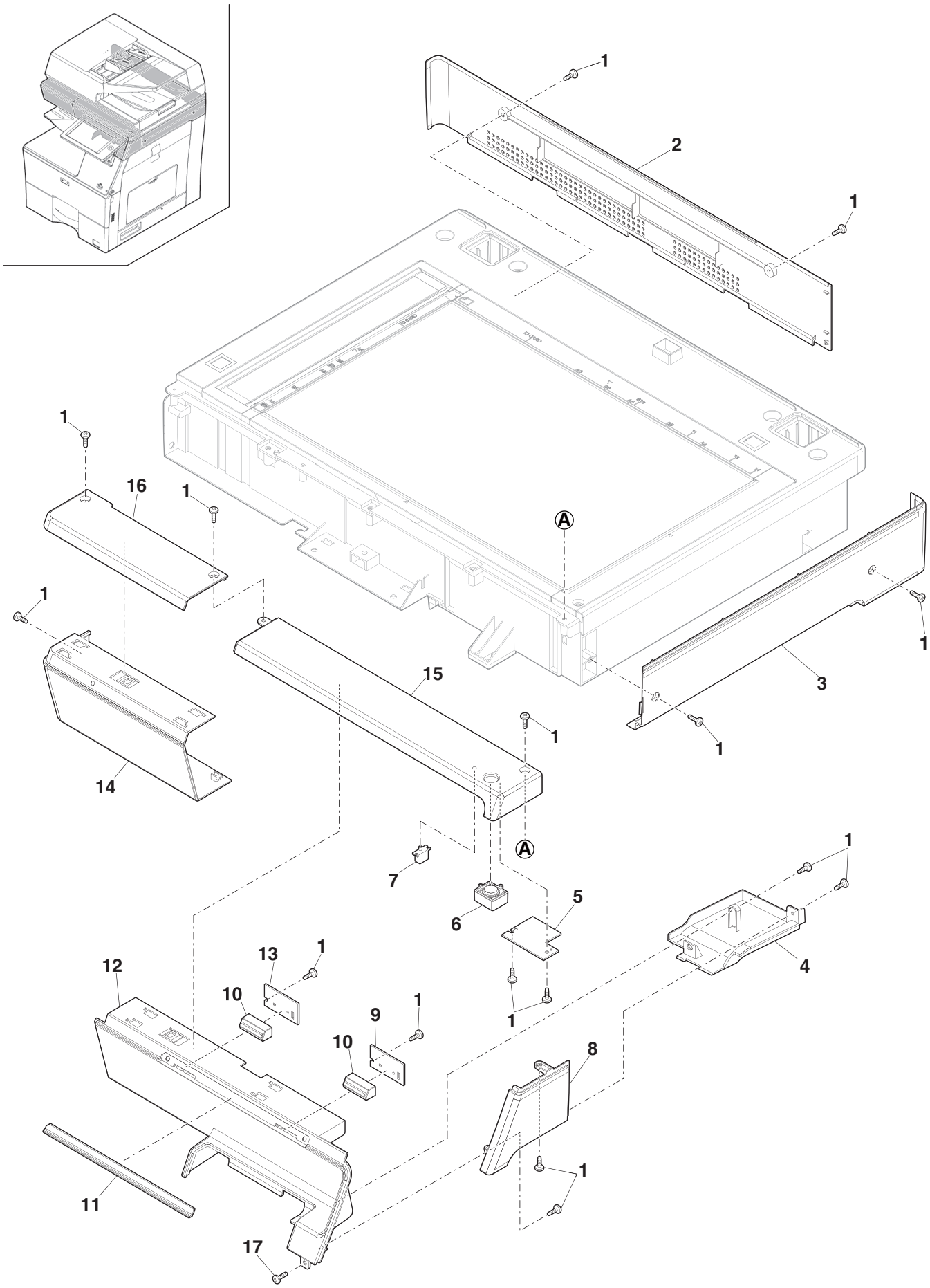

Update : 2018/Nov/9

【002】
外装 1 (Exteriors 1)[MFP Model]

NO.	PARTS CODE	PRICE RANK Ex.	PRICE RANK Ja.	DESCRIPTION		Inter-change	Reason for change	Effective time
1 ♣	CCAB−0293QS01	BA	FX	Front cover upper	前ｶﾊﾞｰ上			
	CCAB−0293QS02	BB	GD	Front cover upper	前ｶﾊﾞｰ上			
2	XEBS730P10000	AC	DD	Screw(3×10)	ﾋﾞｽ			
3	GCAB−0285QSZZ	AY	FQ	Scanner lower right cover	ｽｷｬﾅｰ右下ｶﾊﾞｰ			
4	XEBS730P08000	AC	DD	Screw(3×8)	ﾋﾞｽ			
5	CPWBF0358QS52	BC	GJ	LED R PWB	LED R 基板			
6	CPWBF0358QS51	BC	GJ	LED G PWB	LED G 基板			
7	GCAB−0284QSZZ	BB	GD	Scanner front cover lower	ｽｷｬﾅｰ前ｶﾊﾞｰ下			
8	PLNS−0031QSZZ	AR	EQ	LED lens	LED 用ﾚﾝｽﾞ			
9	CCŌV−0158QS51	BB	GD	LED lens cover	LED ﾚﾝｽﾞｶﾊﾞｰ			
10	XEBS740P10000	AA	DD	Screw(4×10)	ﾋﾞｽ			
11	GCAB−0287QSZZ	AZ	FX	Scanner rear cover	ｽｷｬﾅｰ後ｶﾊﾞｰ			
12	GCAB−0286QSZZ	AZ	FX	Scanner right cover	ｽｷｬﾅｰ右ｶﾊﾞｰ			

Matrix

No.1	前ｶﾊﾞｰ上 (Front cover upper)	
PARTS CODE	Americas Europe Australia Asia	Japan
CCAB−0293QS01	1st Lot	
CCAB−0293QS02		1st Lot

【002】
外装 1 (Exteriors 1)[MFP Model]

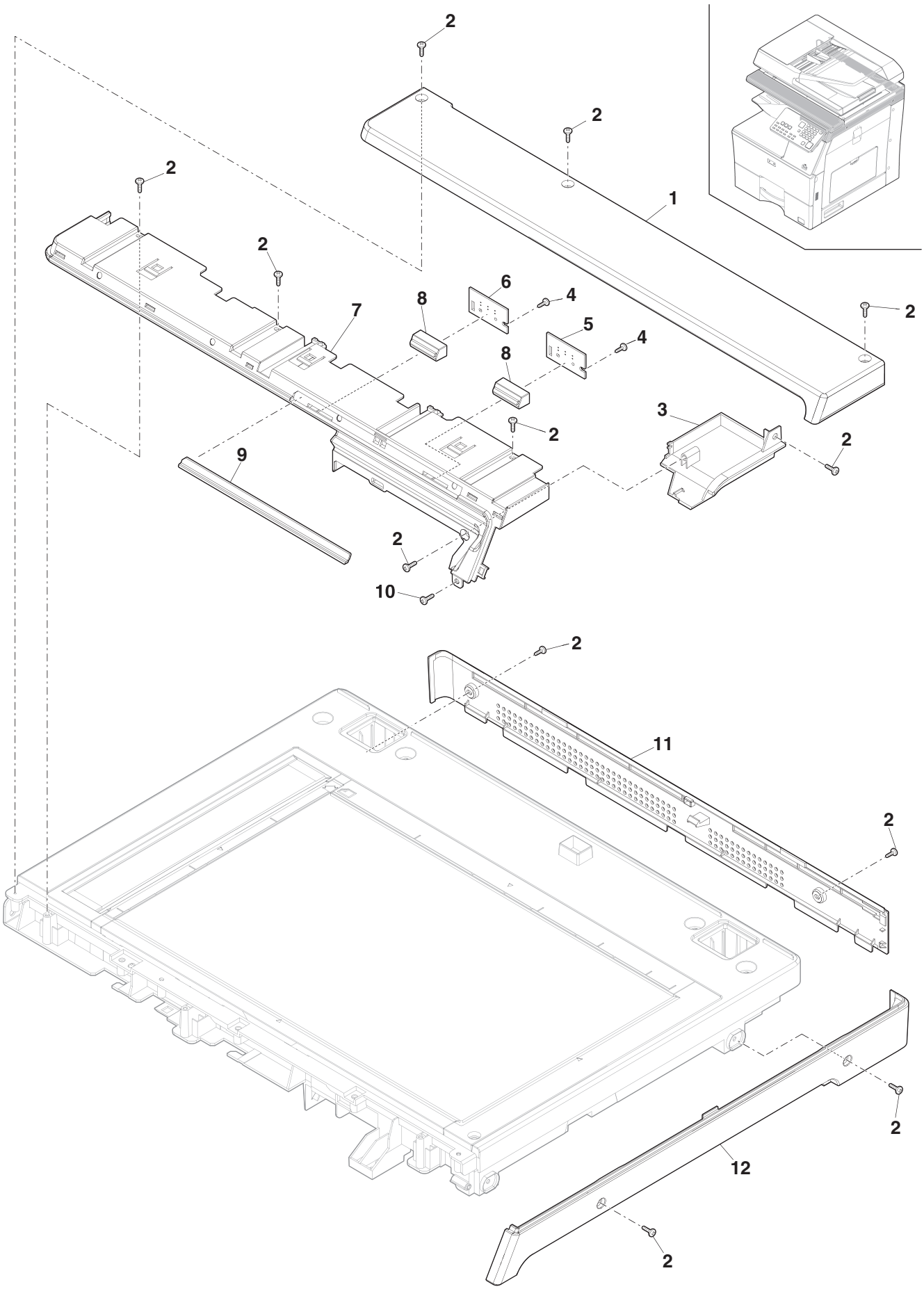

Update : 2018/Nov/9

【003】
外装 2 (Exteriors 2)

NO.	PARTS CODE	PRICE RANK Ex.	PRICE RANK Ja.	DESCRIPTION		Inter-change	Reason for change	Effective time
1 ♣	GCAB-0273QSZ1	BG	GX	Rear cabinet	後ｷｬﾋﾞ			
	GCAB-0273QSZZ	BC	GJ	Rear cabinet	後ｷｬﾋﾞ			
2	XHBS730P08000	AB	DD	Screw(3×8)	ﾋﾞｽ			
3	TCAUA1080FCZZ	AD	DJ	Service caution label	ｻｰﾋﾞｽ注意ﾗﾍﾞﾙ			
	♻ TCAUA0038QSZZ	AD	DJ	Servuce caution label	ｻｰﾋﾞｽ注意ﾗﾍﾞﾙ	3	Productivity improvement	18/Apr
4	TLABH5200FCZZ	AB	DJ	Plug caution label	ﾌﾟﾗｸﾞｺｰｼｮﾝﾗﾍﾞﾙ			
	♻ TLABH1121QSZZ	AB	DJ	Plug caution label	ﾌﾟﾗｸﾞｺｰｼｮﾝﾗﾍﾞﾙ	3	Productivity improvement	18/April RC
5	XEBS740P10000	AA	DD	Screw(4×10)	ﾋﾞｽ			
6	GCAB-0282QSAZ	AX	FQ	Rear handle cabinet	後ﾊﾝﾄﾞﾙｷｬﾋﾞ			
7	GCAB-0270QSZZ	AY	FQ	Right cabinet lower	右ｷｬﾋﾞ下			
8	GCAB-0268QSZZ	AX	FQ	Right cabinet front	右ｷｬﾋﾞ前			
9	LBNDZ0007QSZZ	AC	DJ	Front cabinet band	前ｷｬﾋﾞﾊﾞﾝﾄﾞ			
10	HBDGD0065FCZZ	AS	EQ	Front cabinet badge	前ｷｬﾋﾞﾊﾞｯｼﾞ			
11 ♣	CBDGD0010QS51	AS	EZ	Model name plate	機種名ﾌﾟﾚｰﾄ			
	CBDGD0010QS52	AS	EZ	Model name plate	機種名ﾌﾟﾚｰﾄ			
	CBDGD0011QS51	AY	FQ	Model name plate	機種名ﾌﾟﾚｰﾄ			
	CBDGD0011QS52	AY	FQ	Model name plate	機種名ﾌﾟﾚｰﾄ			
	CBDGD0011QS53	AY	FQ	Model name plate	機種名ﾌﾟﾚｰﾄ			
	CBDGD0011QS54	AY	FQ	Model name plate	機種名ﾌﾟﾚｰﾄ			
	CBDGD0011QS59	AX	FQ	Model name plate	機種名ﾌﾟﾚｰﾄ			
	CBDGD0011QS55	AX	FQ	Model name plate	機種名ﾌﾟﾚｰﾄ			
	CBDGD0011QS56	AX	FQ	Model name plate	機種名ﾌﾟﾚｰﾄ			
	CBDGD0011QS57	AX	FQ	Model name plate	機種名ﾌﾟﾚｰﾄ			
	CBDGD0011QS58	AX	FQ	Model name plate	機種名ﾌﾟﾚｰﾄ			
	CBDGD0011QS60	AX	FQ	Model name plate	機種名ﾌﾟﾚｰﾄ			
	CBDGD0011QS61	AX	FQ	Model name plate	機種名ﾌﾟﾚｰﾄ			
	CBDGD0011QS62	AX	FQ	Model name plate	機種名ﾌﾟﾚｰﾄ			
	CBDGD0011QS63	AX	FQ	Model name plate	機種名ﾌﾟﾚｰﾄ			
	CBDGD0011QS66	AX	FQ	Model name plate	機種名ﾌﾟﾚｰﾄ			
	CBDGD0011QS69	AX	FQ	Model name plate	機種名ﾌﾟﾚｰﾄ			
12	GCAB-0266QSZZ	AZ	FX	Front cabinet	前ｷｬﾋﾞ			
13	XEBS730P10000	AC	DD	Screw(3×10)	ﾋﾞｽ			
14	GCAB-0269QSZZ	AX	FQ	Right cabinet front upper	右ｷｬﾋﾞ前上			
15	GCAB-0267QSZZ	AZ	FX	Front cabinet upper right	前ｷｬﾋﾞ上右			
16	GCAB-0271QSZZ	BE	GN	Left cabinet	左ｷｬﾋﾞ			
17 ♣	GCAB-0272QSZZ	AX	FQ	Left cabinet upper	左ｷｬﾋﾞ上			
	GCAB-0272QSZ1	AZ	FX	Left cabinet upper	左ｷｬﾋﾞ上			
18	XEBS740P08000	AA	DD	Screw(4×8)	ﾋﾞｽ			
19	GCAB-0281QSZZ	BF	GN	Delivery cabinet	排紙ｷｬﾋﾞ			
	♻ GCAB-0281QSZ1	BF	GN	Delivery cabinet	排紙ｷｬﾋﾞ	3	Improve performance	18/Jan RC
20	LSŌU-0092QSZZ	AY	FQ	Delivery extension tray	排紙延長ﾄﾚｲ P			
21	LSŌU-0091QSZZ	AZ	FX	Delivery tray	排紙ﾄﾚｲ			
22	LPLTP1046QSZZ	AY	FQ	Flange lower cover	ﾌﾗﾝｼﾞ下ｶﾊﾞｰ			
23	LDAiU0087QSZZ	BD	GN	Top cabinet base plate	上ｷｬﾋﾞ台板			
24	GCAB-0291QSZZ	BD	GN	Top cabinet	上ｷｬﾋﾞ			
25	GCAB-0288QSZZ	BA	FX	Front cabinet upper right	前ｷｬﾋﾞ上右			
26 ♣	CPWBX0291QS62	BR	MJ	LCD PWB	LCD 基板			
	CPWBX0291QS63	BR	MJ	LCD PWB	LCD 基板			

【003】
外装 2 (Exteriors 2)

Matrix

No.1	後ｷｬﾋﾞ (Rear cabinet)	
PARTS CODE	MX-B455W MX-B455WZ MX-B355W MX-B355WZ MX-B450W MX-B350W AR-B350W MX-B450FZ AR-B451F MX-B350FZ AR-B351FT	MX-B450Z AR-B451T MX-B350Z AR-B351T MX-B450P MX-B350P MX-B350PZ MX-B451PZ AR-B453PT MX-B351PZ AR-B353PT
GCAB-0273QSZ1	1st Lot	
GCAB-0273QSZZ		1st Lot

No.11-1	機種名ﾌﾟﾚｰﾄ (Model name plate)											
PARTS CODE	MX-B455W MX-B455WZ	MX-B355W MX-B355WZ	MX-B450W	MX-B350W	AR-B350W	MX-B450FZ	AR-B451F	MX-B350FZ	AR-B351FT	MX-B450Z AR-B451T	MX-B350Z AR-B351T	MX-B450P
CBDGD0010QS51		1st Lot										
CBDGD0010QS52	1st Lot											
CBDGD0011QS51			1st Lot									
CBDGD0011QS52				1st Lot								
CBDGD0011QS53												1st Lot
CBDGD0011QS55						1st Lot						
CBDGD0011QS56										1st Lot		
CBDGD0011QS57								1st Lot				
CBDGD0011QS58											1st Lot	
CBDGD0011QS59					1st Lot							
CBDGD0011QS66							1st Lot					
CBDGD0011QS69									1st Lot			

No.11-2	機種名ﾌﾟﾚｰﾄ (Model name plate)				
PARTS CODE	MX-B350P MX-B350PZ	MX-B451PZ	AR-B453PT	MX-B351PZ	AR-B353PT
CBDGD0011QS54	1st Lot				
CBDGD0011QS60		1st Lot			
CBDGD0011QS61			1st Lot		
CBDGD0011QS62				1st Lot	
CBDGD0011QS63					1st Lot

No.17	左ｷｬﾋﾞ上 (Left cabinet upper)	
PARTS CODE	MX-B455W MX-B455WZ MX-B355W MX-B355WZ	MX-B450W MX-B350W AR-B350W MX-B450FZ AR-B451F MX-B350FZ AR-B351FT MX-B450Z AR-B451T MX-B350Z AR-B351T MX-B450P MX-B350P MX-B350PZ MX-B451PZ AR-B453PT MX-B351PZ AR-B353PT
GCAB-0272QSZ1		1st Lot
GCAB-0272QSZZ	1st Lot	

No.26	LCD 基板 (LCD PWB)	
PARTS CODE	Americas Europe1 Australia Asia	Europe2
CPWBX0291QS62	1st Lot	
CPWBX0291QS63		1st Lot

Update：2018/Nov/9

【003】
外装 2 (Exteriors 2)

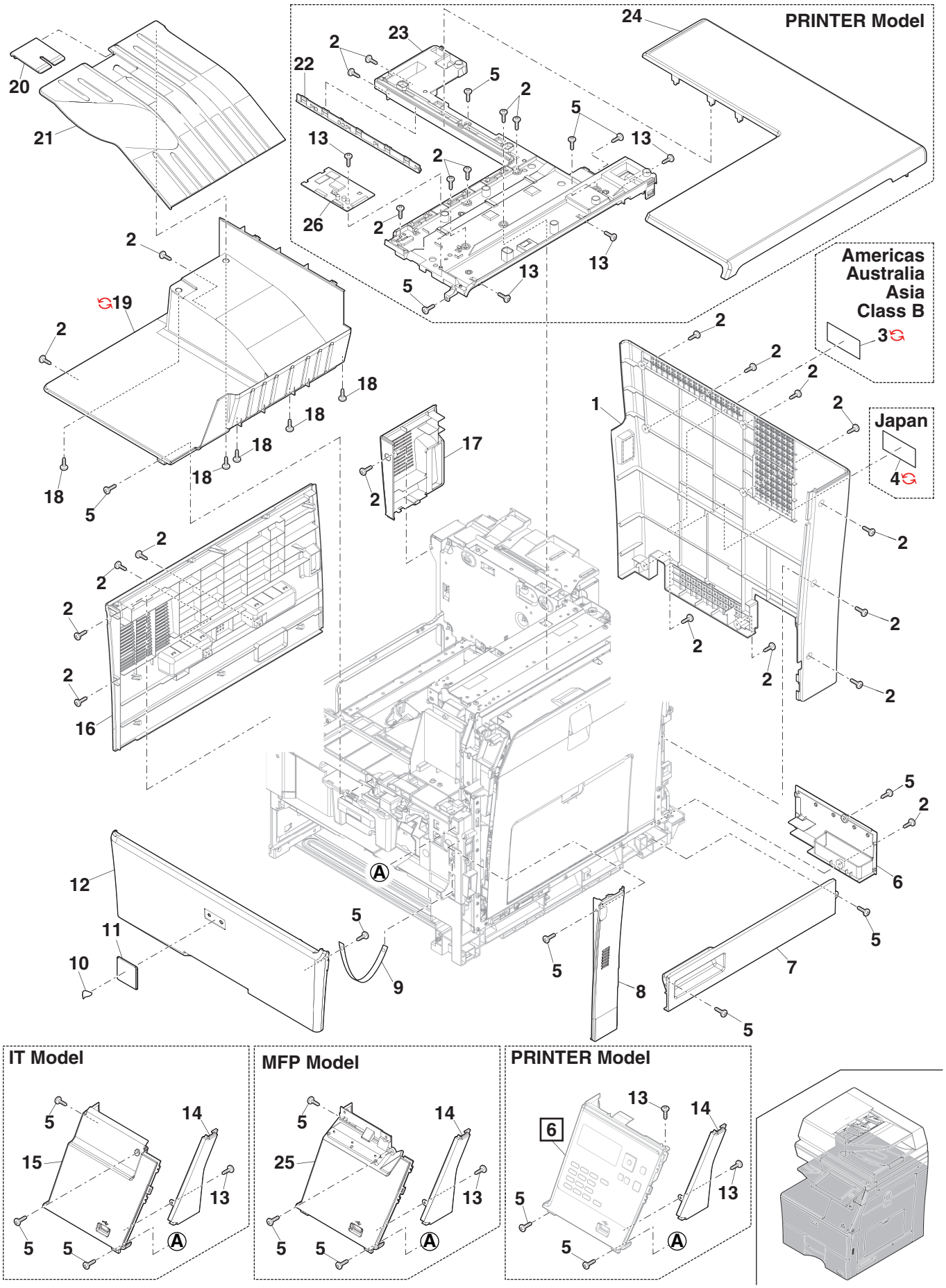

Update : 2018/Nov/9

【004】

操作ﾊﾟﾈﾙﾕﾆｯﾄ (Operation panel)[IT Model]

NO.	PARTS CODE	PRICE RANK Ex.	PRICE RANK Ja.	DESCRIPTION		Inter-change	Reason for change	Effective time
1 ♣	ＣＣＡＢ－１６６９ＦＣ０２	BB	GD	Operation cabinet	操作部ｷｬﾋﾞ			
	ＣＣＡＢ－１６６９ＦＣ０４	BB	GD	Operation cabinet	操作部ｷｬﾋﾞ			
2	ＰＦｉＬＷ０４００ＦＣＺＺ	AD	DJ	Home key filter	ﾎｰﾑｷｰﾌｨﾙﾀｰ			
3	ＣＰＷＢＮ０３３６ＱＳ５２	BE	GN	Home key PWB	ﾎｰﾑｷｰ基板			
4	ＨＰＮＬＨ００９５ＱＳＰＺ	BM	HR	Touch panel	ﾀｯﾁﾊﾟﾈﾙ			
5	ＰＳＨＥＺ５７６４ＦＨＺＺ	AQ	EQ	Touch panel sheet	ﾀｯﾁﾊﾟﾈﾙｼｰﾄ			
6	ＸＥＢＳ７３０Ｐ０８０００	AC	DD	Screw(3×8)	ﾋﾞｽ			
7	ＬＨＬＤＺ２６８２ＦＣＺＺ	AT	EZ	LCD holder A	LCD ﾎﾙﾀﾞｰ A			
8	ＶＶＬ０７０ＢＡＣＭ１－１	BZ	TF	LCD	LCD			
9	ＬＨＬＤＺ０３４２ＱＳＺＺ	AX	FQ	LCD holder	LCD ﾎﾙﾀﾞｰ			
10	ＭＳＰＲＰ３００９ＦＣＺＺ	AD	DJ	LCD earth plate	LCD 用ｱｰｽ板			
11	ＣＰＷＢＸ０３２６ＱＳ５１	BL	HR	LCD I/F PWB	LCD I/F 基板			
	(Unit)							
901 ♣	ＣＣＡＢ－１６６９ＦＣ５３	CA	TX	Operation panel unit	操作ﾊﾟﾈﾙﾕﾆｯﾄ			
	ＣＣＡＢ－１６６９ＦＣ５４	CA	TV	Operation panel unit	操作ﾊﾟﾈﾙﾕﾆｯﾄ			

Matrix

No.1	操作部ｷｬﾋﾞ (Operation cabinet)	
PARTS CODE	Americas Europe Australia Hong Kong Class B	Japan
ＣＣＡＢ－１６６９ＦＣ０２	1st Lot	
ＣＣＡＢ－１６６９ＦＣ０４		1st Lot

No.901	操作ﾊﾟﾈﾙﾕﾆｯﾄ (Operation panel unit)	
PARTS CODE	Americas Europe Australia Hong Kong Class B	Japan
ＣＣＡＢ－１６６９ＦＣ５３	1st Lot	
ＣＣＡＢ－１６６９ＦＣ５４		1st Lot

【004】

操作ﾊﾟﾈﾙﾕﾆｯﾄ (Operation panel)[IT Model]

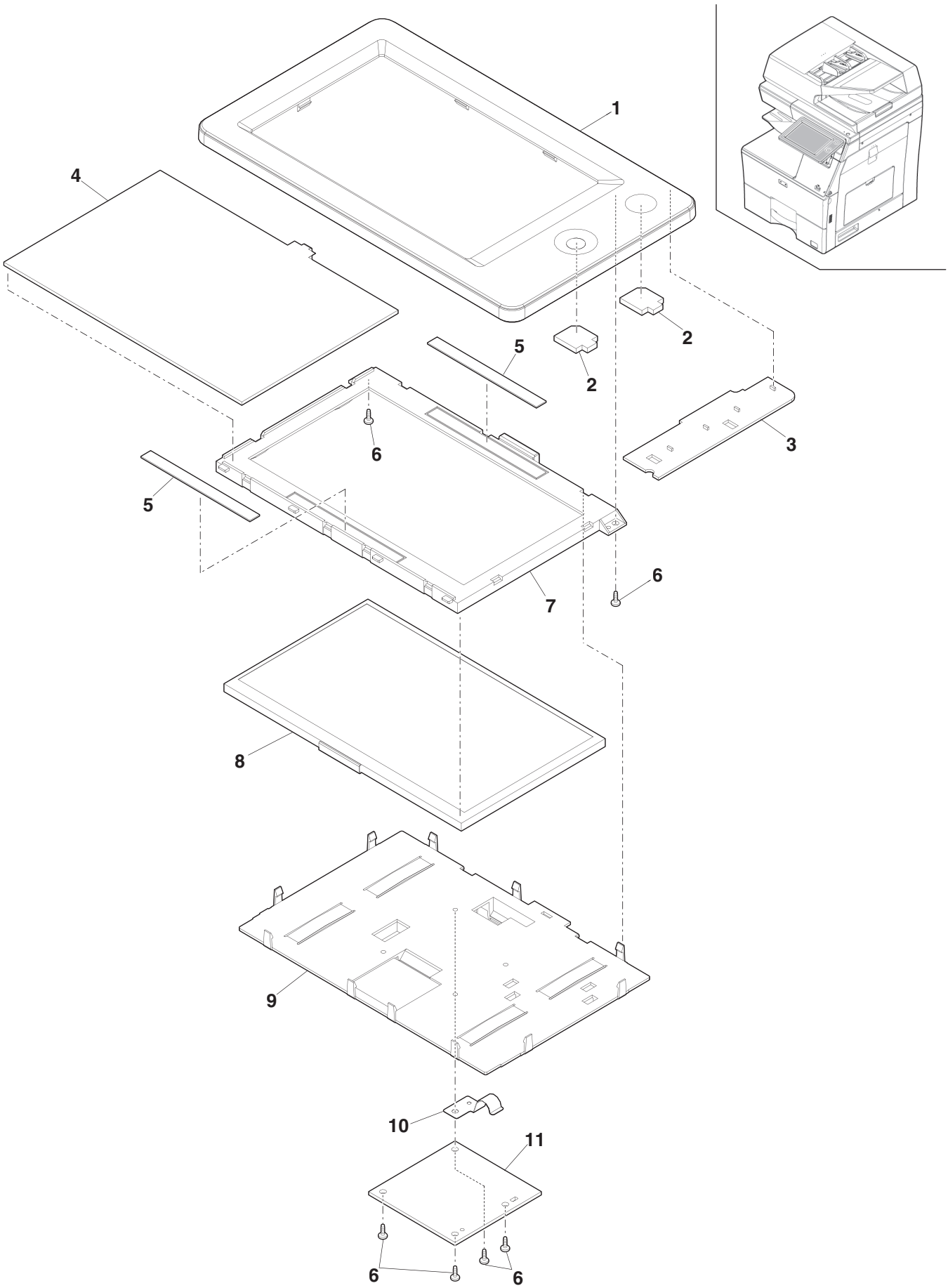

Update : 2018/Nov/9

【005】

操作ﾊﾟﾈﾙﾕﾆｯﾄ (Operation panel)[MFP Model]

NO.	PARTS CODE	PRICE RANK Ex.	PRICE RANK Ja.	DESCRIPTION		Inter-change	Reason for change	Effective time
1 ♣	CPNLC0099QS01	AZ	FX	Key sheet	ｷｰｼｰﾄ			
	CPNLC0099QS02	AZ	FX	Key sheet	ｷｰｼｰﾄ			
	CPNLC0099QS03	AZ	FX	Key sheet	ｷｰｼｰﾄ			
	CPNLC0100QS01	AZ	FX	Key sheet	ｷｰｼｰﾄ			
2	PLNS-0032QSZZ	AX	FQ	Protect cover	保護ｶﾊﾞｰ			
3	PTPE-0117QSZZ	AU	FG	Double sided tape	両面ﾃｰﾌﾟ			
4	GCAB-0289QSZZ	AZ	FX	Panel cover	ﾊﾟﾈﾙｶﾊﾞｰ			
5	RLCUC0001QSPZ	BF	GN	LCD module(192×73)	LCD ﾓｼﾞｭｰﾙ			
6	LHLDZ0348QSZZ	AY	FQ	LCD holder	LCD ﾎﾙﾀﾞｰ			
7	XEBS730P08000	AC	DD	Screw(3×8)	ﾋﾞｽ			
8	JBTN-0155QSZZ	AY	FQ	Power save key	節電ｷｰ			
9 ♣	CBTN-0160QS01	AZ	FX	Key button	ｷｰﾎﾞﾀﾝ			
	CBTN-0160QS02	AZ	FX	Key button	ｷｰﾎﾞﾀﾝ			
10	JBTN-0153QSZZ	AY	FQ	OK Key	OK ｷｰ			
11	JBTN-0152QSZZ	AY	FQ	Cross cursor key	十字ｶｰｿﾙｷｰ			
12 ♣	JBTN-0148QSZZ	AY	FQ	Change key	切り替えｷｰ			
	JBTN-0149QSZZ	AY	FQ	Change key	切り替えｷｰ			
13	JBTN-0150QSZZ	AY	FQ	FAX key	FAX ｷｰ			
14	JBTN-0151QSZZ	AY	FQ	Function key	機能ｷｰ			
15	PLNS-0033QSZZ	AX	FQ	LED lens	LED ﾚﾝｽﾞ			
16	JBTN-0157QSZZ	AY	FQ	Stop key	ｽﾄｯﾌﾟｷｰ			
17	JBTN-0156QSZZ	AY	FQ	Start key	ｽﾀｰﾄｷｰ			
18	CPWBF0355QS51	BM	HV	Ope Key PWB	操作ｷｰ基板			
19	PSHEP1052QSZZ	AU	FG	Protect mylar	保護ﾏｲﾗｰ			
20 ♣	CPWBX0291QS59	BR	MJ	LCD PWB	LCD 基板			
	CPWBX0291QS60	BR	MJ	LCD PWB	LCD 基板			
	CPWBX0291QS61	BR	MJ	LCD PWB	LCD 基板			
21	XHBS730P08000	AB	DD	Screw(3×8)	ﾋﾞｽ			
22	XEBS740P10000	AA	DD	Screw(4×10)	ﾋﾞｽ			
23	LDAiZ0088QSZZ	BA	FX	Operation base plate	操作台板			
	(Unit)							
901 ♣	CCAB-0289QS51	CA	TX	Operation panel unit	操作ﾊﾟﾈﾙﾕﾆｯﾄ			
	CCAB-0289QS52	CA	TX	Operation panel unit	操作ﾊﾟﾈﾙﾕﾆｯﾄ			
	CCAB-0289QS53	CA	TX	Operation panel unit	操作ﾊﾟﾈﾙﾕﾆｯﾄ			
	CCAB-0289QS54	CA	TX	Operation panel unit	操作ﾊﾟﾈﾙﾕﾆｯﾄ			
	CCAB-0290QS52	CA	TX	Operation panel unit	操作ﾊﾟﾈﾙﾕﾆｯﾄ			

【005】
操作ﾊﾟﾈﾙﾕﾆｯﾄ (Operation panel)[MFP Model]

Matrix

No.1	ｷｰｼｰﾄ (Key sheet)				
PARTS CODE	MX-B450W MX-B350W AR-B350W			MX-B450FZ AR-B451F MX-B350FZ AR-B351FT	MX-B450Z AR-B451T MX-B350Z AR-B351T
	Americas Australia	Europe Hong Kong Asia2	Japan	Thailand Asia2 Asia4	Asia2 Asia4 Asia5 Asia6 Asia7
CPNLC0099QS01		1st Lot		1st Lot	
CPNLC0099QS02	1st Lot				
CPNLC0099QS03			1st Lot		
CPNLC0100QS01					1st Lot

No.9	ｷｰﾎﾞﾀﾝ (Key button)	
PARTS CODE	Americas Europe Australia Asia	Japan
CBTN-0160QS01	1st Lot	
CBTN-0160QS02		1st Lot

No.12	切り替えｷｰ (Change key)	
PARTS CODE	MX-B450W MX-B350W AR-B350W MX-B450FZ AR-B451F MX-B350FZ AR-B351FT	MX-B450Z AR-B451T MX-B350Z AR-B351T
JBTN-0148QSZZ	1st Lot	
JBTN-0149QSZZ		1st Lot

No.20	LCD 基板 (LCD PWB)		
PARTS CODE	Americas Europe1 Australia Asia	Europe2	Japan
CPWBX0291QS59	1st Lot		
CPWBX0291QS60		1st Lot	
CPWBX0291QS61			1st Lot

No.901	操作ﾊﾟﾈﾙﾕﾆｯﾄ (Operation panel unit)					
PARTS CODE	MX-B450W MX-B350W AR-B350W				MX-B450FZ AR-B451F MX-B350FZ AR-B351FT	MX-B450Z AR-B451T MX-B350Z AR-B351T
	Americas Australia	Europe1 Hong Kong Asia2	Europe2	Japan	Thailand Asia2 Asia4	Asia2 Asia4 Asia5 Asia6 Asia7
CCAB-0289QS51	1st Lot					
CCAB-0289QS52			1st Lot			
CCAB-0289QS53				1st Lot		
CCAB-0289QS54		1st Lot			1st Lot	
CCAB-0290QS52						1st Lot

Update : 2018/Nov/9

【005】

操作ﾊﾟﾈﾙﾕﾆｯﾄ (Operation panel)[MFP Model]

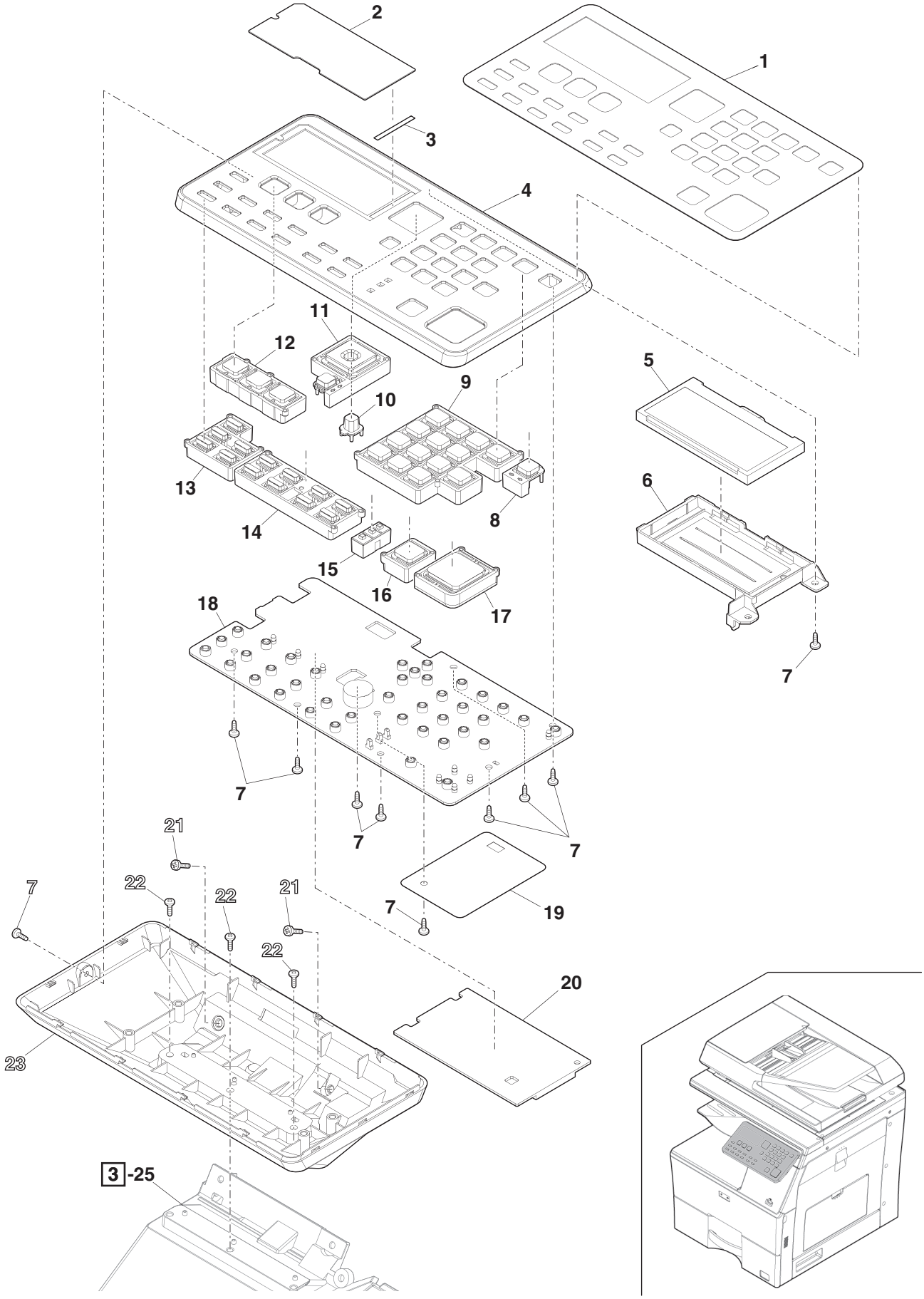

Update : 2018/Nov/9

【006】

操作ﾊﾟﾈﾙﾕﾆｯﾄ (Operation panel)[PRINTER Model]

NO.	PARTS CODE	PRICE RANK Ex.	PRICE RANK Ja.	DESCRIPTION		Inter-change	Reason for change	Effective time
1	ＣＰＷＢＦ０３５６ＱＳ５１	BL	HR	Ope Key PWB	操作ｷｰ基板			
2	ＸＥＢＳ７３０Ｐ０８０００	AC	DD	Screw(3×8)	ﾋﾞｽ			
3	ＬＨＬＤＺ０３４９ＱＳＺＺ	AY	FQ	LCD holder	LCD ﾎﾙﾀﾞｰ			
4	ＲＬＣＵＣ０００１ＱＳＰＺ	BF	GN	LCD module(192×73)	LCD ﾓｼﾞｭｰﾙ			
5	ＪＢＴＮ－０１５３ＱＳＺＺ	AY	FQ	OK Key	OK ｷｰ			
6	ＪＢＴＮ－０１５２ＱＳＺＺ	AY	FQ	Cross cursor key	十字ｶｰｿﾙｷｰ			
7	ＪＢＴＮ－０１５５ＱＳＺＺ	AY	FQ	Power save key	節電ｷｰ			
8	ＪＢＴＮ－０１５７ＱＳＺＺ	AY	FQ	Stop key	ｽﾄｯﾌﾟｷｰ			
9	ＪＢＴＮ－０１５８ＱＳＺＺ	BK	HG	Function key	機能ｷｰ			
10	ＬＤＡｉＺ００８９ＱＳＺＺ	BL	HR	Panel cover	ﾊﾟﾈﾙｶﾊﾞｰ			
11	ＪＢＴＮ－０１５９ＱＳＺＺ	AZ	FX	10 key	10 ｷｰ			
12	ＰＴＰＥ－０１１７ＱＳＺＺ	AU	FG	Double sided tape	両面ﾃｰﾌﾟ			
13	ＰＬＮＳ－００３２ＱＳＺＺ	AX	FQ	Protect cover	保護ｶﾊﾞｰ			
14	ＰＬＮＳ－００３４ＱＳＺＺ	AX	FQ	LED lens	LED ﾚﾝｽﾞ			
15	ＧＣＡＢ－０２９２ＱＳＺＺ	BA	FX	Operation panel cover	操作ﾊﾟﾈﾙｶﾊﾞｰ			
16	ＰＴＰＥ－０１１６ＱＳＺＺ	AU	FG	Tape	ﾃｰﾌﾟ			
17	ＰＬＮＳ－００３５ＱＳＺＺ	AX	FQ	Status display bar	状態表示ﾊﾞｰ			
18	ＨＰＮＬＣ００９８ＱＳＺＺ	BL	HR	Key panel	ｷｰｼｰﾄ			
19	ＰＳＨＥＰ１１０３ＱＳＺＺ	AU	FG	Film	ﾌｨﾙﾑ			
	(Unit)							
901	ＣＣＡＢ－０２９２ＱＳ５１	BX	TF	Operation panel unit	操作ﾊﾟﾈﾙﾕﾆｯﾄ			

【006】

操作ﾊﾟﾈﾙﾕﾆｯﾄ (Operation panel)[PRINTER Model]

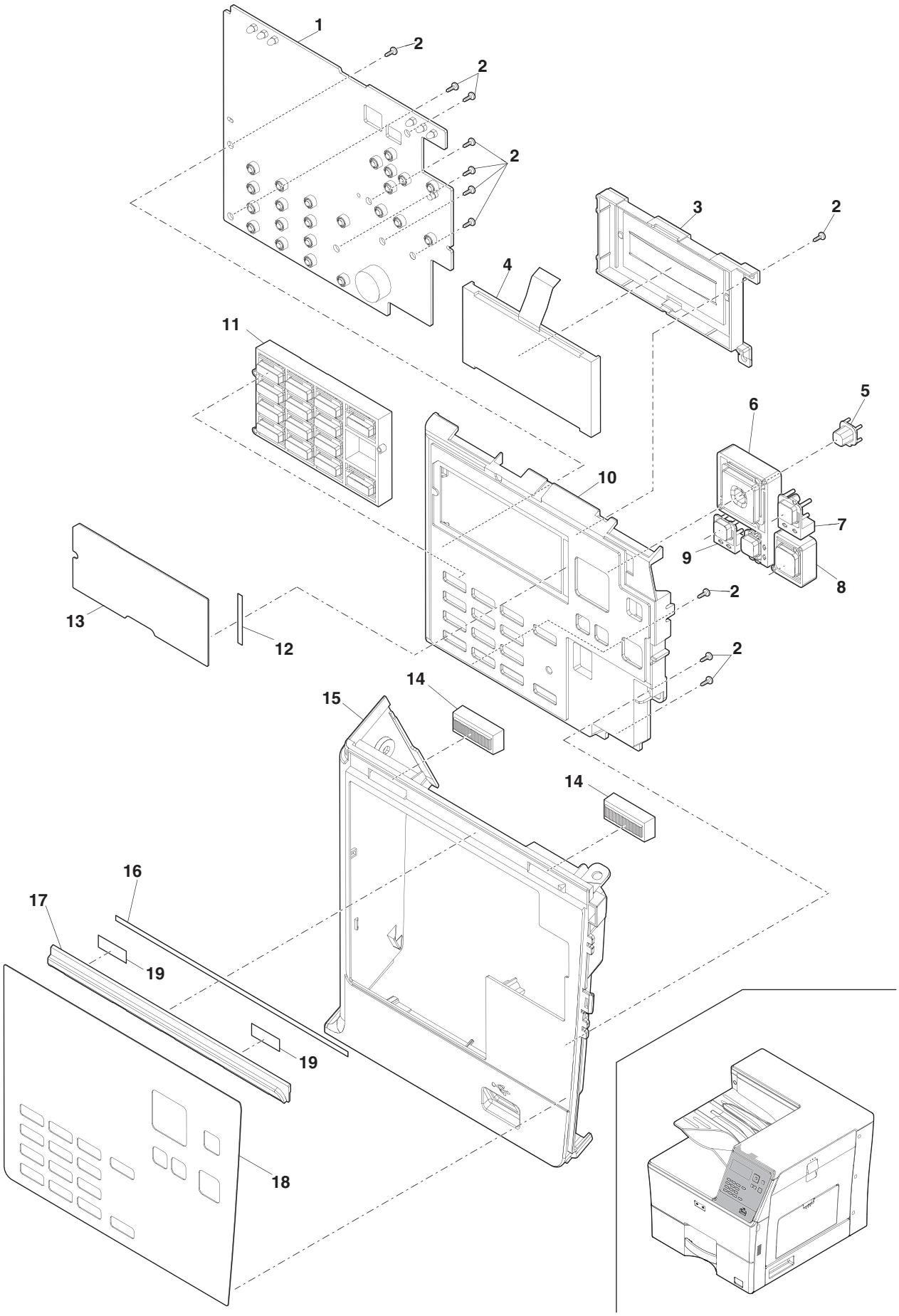

Update : 2018/Nov/9

【007】

DSPF 外装部 (DSPF Exteriors)[MX-B455W,MX-B455WZ]

NO.	PARTS CODE	PRICE RANK Ex.	PRICE RANK Ja.	DESCRIPTION		Inter-change	Reason for change	Effective time
1	XHBS730P06000	AC	DD	Screw(3×6)	ﾋﾞｽ			
2 ♣	CPWBX0327QS51	BZ	TR	DSPF control PWB	DSPF ｺﾝﾄﾛｰﾙ基板			
	CPWBX0327QS52	CB	TZ	DSPF control PWB	DSPF ｺﾝﾄﾛｰﾙ基板			
	CPWBX0327QS53	CB	TZ	DSPF control PWB	DSPF ｺﾝﾄﾛｰﾙ基板			
3	XEBS730P08000	AC	DD	Screw(3×8)	ﾋﾞｽ			
4	LPLTM1012QSZZ	AX	FQ	PWB bracket	基板ﾌﾞﾗｹｯﾄ			
5	PGSK-0077FCZZ	AE	DS	Gasket FL	ｶﾞｽｹｯﾄ FL			
7	PCŌVP0270QSZZ	AX	FQ	decorative cover L	化粧ｶﾊﾞｰ L			
8	GCAB-0265QSZZ	BA	FX	Rear case	後ｹｰｽ			
	♻ GCAB-0265QSZ1	BA	FX	Rear case	後ｹｰｽ	3	Improve performance	18/Jun RC
9	XEBS730P10000	AC	DD	Screw(3×10)	ﾋﾞｽ			
10	MHNG-0043QSZZ	BK	HG	ADF hinge L	ADF ﾋﾝｼﾞ L			
11	XEBS740P16000	AB	DD	Screw(4×16)	ﾋﾞｽ			
12	MHNG-0044QSZZ	BK	HG	ADF hinge R	ADF ﾋﾝｼﾞ R			
15	GCAB-0264QSZZ	AZ	FX	Front case	前ｹｰｽ			
16	XHBS740P08000	AA	DD	Screw(4×8)	ﾋﾞｽ			
17	LHLDZ1640FCZZ	AC	DJ	Paper feed guide holder	給紙ｶﾞｲﾄﾞﾎﾙﾀﾞｰ			
18	MSPRT3390FHZZ	AQ	EQ	Link arm return spring	ﾘﾝｸｱｰﾑ復帰ｽﾌﾟﾘﾝｸﾞ			
19	MARMP0325FCZZ	AC	DJ	Upper guide link arm	上ｶﾞｲﾄﾞﾘﾝｸｱｰﾑ			
20	PSHEP1019QSZZ	AS	EZ	OC mat	OC ﾏｯﾄ			
21	PSPŌ-0044QSZZ	AN	EQ	Gap sponge	隙間ｽﾎﾟﾝｼﾞ			
	(Unit)							
901 ♣	DUNT-1412QS11	CS	VT	DSPF unit	DSPF ﾕﾆｯﾄ			
	DUNT-1412QS12	CR	VJ	DSPF unit	DSPF ﾕﾆｯﾄ			
	DUNT-1412QSZZ	CT	VW	DSPF unit	DSPF ﾕﾆｯﾄ			

Matrix

No.2	DSPF ｺﾝﾄﾛｰﾙ基板 (DSPF control PWB)		
PARTS CODE	Americas	Europe Australia Hong Kong Class B	Japan
CPWBX0327QS51	1st Lot		
CPWBX0327QS52			1st Lot
CPWBX0327QS53		1st Lot	

No.901	DSPF ﾕﾆｯﾄ (DSPF unit)		
PARTS CODE	Americas	Europe Australia Hong Kong Class B	Japan
DUNT-1412QS11		1st Lot	
DUNT-1412QS12			1st Lot
DUNT-1412QSZZ	1st Lot		

【007】
DSPF 外装部 (DSPF Exteriors)[MX-B455W,MX-B455WZ]

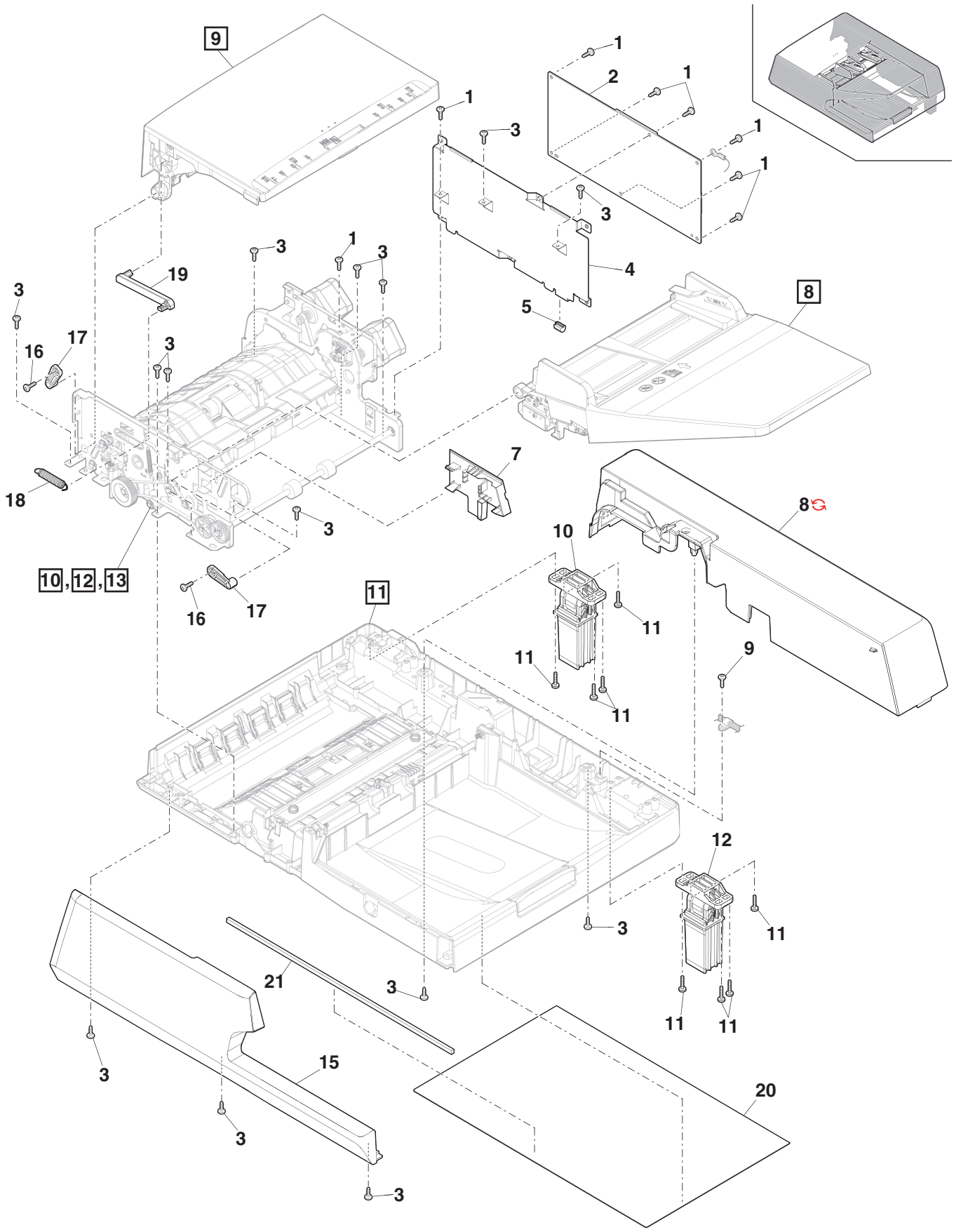

Update : 2018/Nov/9

【008】

DSPF 原稿ﾄﾚｲ部 (DSPF Original tay)[MX-B455W,MX-B455WZ]

NO.	PARTS CODE	PRICE RANK Ex.	PRICE RANK Ja.	DESCRIPTION		Inter-change	Reason for change	Effective time
1	LSŌU-0088QSZZ	BD	GN	Original tray upper	原稿ﾄﾚｲ上			
2	XEPS730P08X00	AA	DD	Screw(3×8X)	ﾋﾞｽ			
3	NGERR2191FCZZ	AD	DJ	Original width rack	原稿幅ﾗｯｸ			
4	MARMP0106QSZZ	AX	FQ	Original fixing arm	原稿押えｱｰﾑ			
5	LSŌU-0089QSZZ	AY	FQ	Original tray lower	原稿ﾄﾚｲ下			
6	XEBS730P08000	AC	DD	Screw(3×8)	ﾋﾞｽ			
7	MSPRC3358FHZZ	AQ	EQ	2nd scan idler spring	2nd ｽｷｬﾝ従動ｽﾌﾟﾘﾝｸﾞ			
8	NRŌLP0011QSZZ	AD	DJ	Delivery follower roller	排紙従動ﾛｰﾗｰ			
9	PSPŌ-0031QSZZ	AC	DJ	Delivery sponge	蹴り出しｽﾎﾟﾝｼﾞ			
10	NSFTZ0253QSZZ	AT	EZ	Idler shaft	従動ｼｬﾌﾄ			
11	PCUSS0395FHZZ	AQ	EQ	SPF earth cushion	SPF ｱｰｽｸｯｼｮﾝ			
12	PBRSR0051QSZZ	AW	FG	Delivery discharge brush	排紙除電ﾌﾞﾗｼ			
13	PTPE-0332FHZZ	AQ	EQ	SPF earth tape	SPF ｱｰｽﾃｰﾌﾟ			
14	PSHEP1042QSZZ	AQ	EQ	CIS spacer	CIS ｽﾍﾟｰｻｰ			
15	PMLT-0315QSZZ	AN	EQ	CIS dustproof cushion	CIS 防塵ﾓﾙﾄ			
16	XHBS730P06000	AC	DD	Screw(3×6)	ﾋﾞｽ			
17	PGiDH0324QSZZ	AX	FQ	Paper guide	ﾍﾟｰﾊﾟｰｶﾞｲﾄﾞ			
18	LHLDZ0337QSZZ	AS	EZ	FFC protective holder	FFC 保護ﾎﾙﾀﾞｰ			
19	PBRSR0260FHZZ	AM	GD	Discharge brush	除電ﾌﾞﾗｼ			
20	PSHEP1024QSZZ	AQ	EQ	Glass inclination sheet	ｶﾞﾗｽ傾きｼｰﾄ			
21	PGLSP0020QSZZ	BB	GD	Glass paper guide	ｶﾞﾗｽﾍﾟｰﾊﾟｰｶﾞｲﾄﾞ			
22	PSHEP1025QSZZ	AQ	EQ	CIS reading before sheet	CIS 読取前ｼｰﾄ			
23	LX-BZ0114QSZZ	AK	EB	Step screw(3×6)	段ﾋﾞｽ			
24	DUNT-1366QSPZ	BZ	TR	CIS unit	CIS ﾕﾆｯﾄ			
25	LX-BZ0113QSZZ	AH	DX	Step screw(3×6)	段ﾋﾞｽ			
26	MSPRP0759QSZZ	AR	EQ	Sheet metal CIS spring	ｼｰﾄ板 CIS ｽﾌﾟﾘﾝｸﾞ			
27	PSHEP1023QSZZ	AQ	EQ	Spacer	ｽﾍﾟｰｻｰ			
28	PCŌVP0269QSZZ	AY	FQ	CIS EMI cover	CIS EMI ｶﾊﾞｰ			
29	NGERH0021QSZZ	AD	DJ	Manual paper feed gear	手差しｷﾞｱ			
30	XWHS730-05080	AA	DD	Washer(φ3-8)	ﾜｯｼｬｰ			
31	LPLTM1006QSZZ	AR	EQ	CIS skew adjustment plate	CIS 傾き調整板			
32	LPLTM1005QSZZ	AR	EQ	CIS mounting plate F	CIS 取付板 F			
33	LPLTP1014QSZZ	AX	FQ	Regulation plate F	規制板 F			
34	LPLTP1015QSZZ	AX	FQ	Regulation plate R	規制板 R			
35	LPLTM1004QSZZ	AR	EQ	CIS mounting plate R	CIS 取付板 R			
36	PSHEP1056QSZZ	AQ	EQ	FFC protect sheet	FFC 保護ｼｰﾄ			
	(Unit)							
901	DUNT-1415QSZZ	BZ	TR	Original tray unit	原稿ﾄﾚｲﾕﾆｯﾄ			

【008】
DSPF 原稿トレイ部 (DSPF Original tay)[MX-B455W,MX-B455WZ]

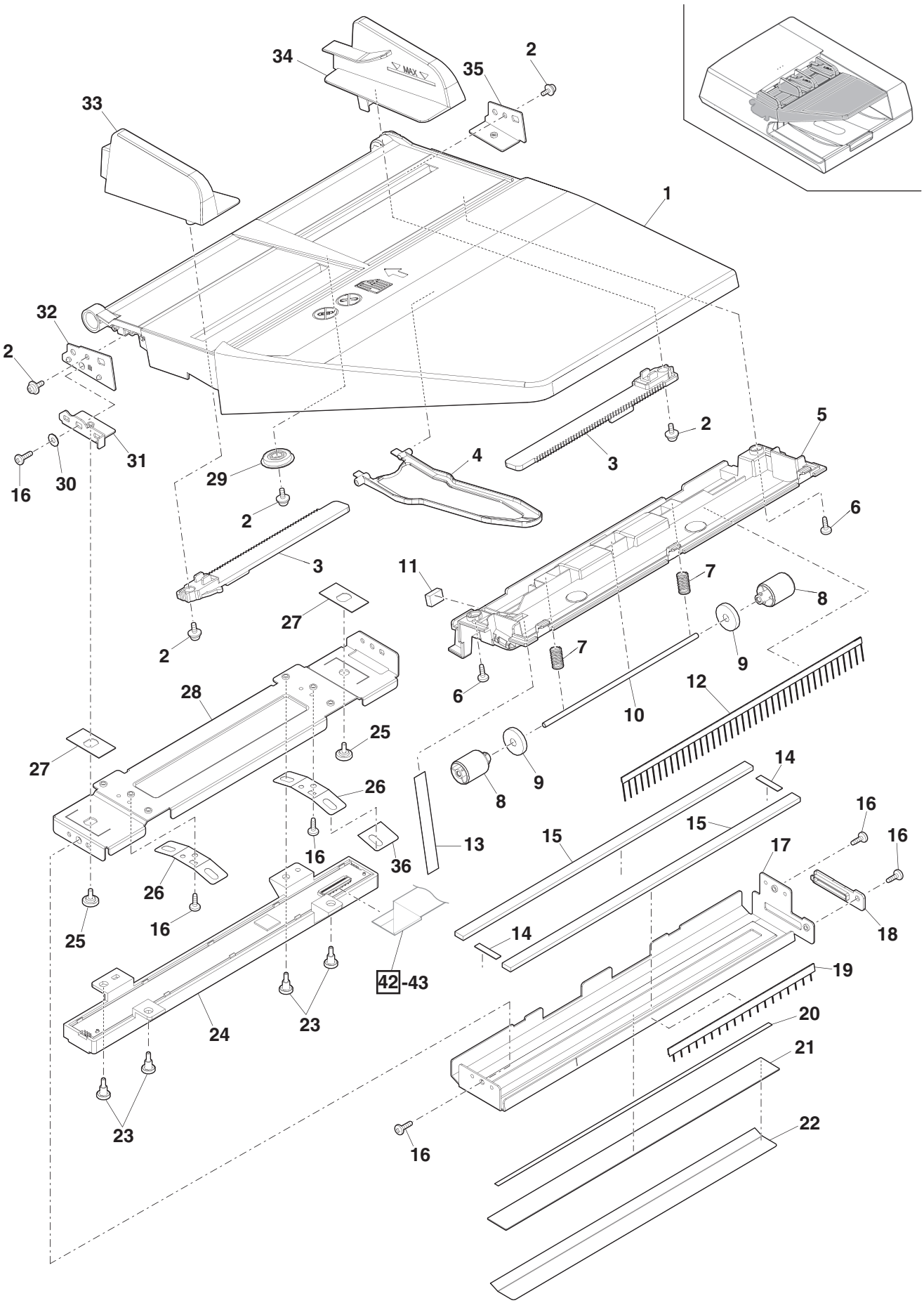

Update : 2018/Nov/9

【009】

DSPF 上ﾄﾞｱﾕﾆｯﾄ (DSPF Upper door unit)[MX-B455W,MX-B455WZ]

NO.	PARTS CODE	PRICE RANK Ex.	PRICE RANK Ja.	DESCRIPTION		Inter-change	Reason for change	Effective time
1	PCŌVP0268QSZZ	BE	GN	Upper door cover	上ﾄﾞｱｶﾊﾞｰ			
2	XEBS730P16000	AA	DD	Screw(3×16)	ﾋﾞｽ			
3	XWHS730-05080	AA	DD	Washer(φ3-8)	ﾜｯｼｬｰ			
4	LHLDZ1755FCZZ	AC	DJ	PS pressure holder	PS 圧接ﾎﾙﾀﾞｰ			
5	MSPRC4039FHZZ	AQ	EQ	PS pressure spring	PS 加圧ｽﾌﾟﾘﾝｸﾞ			
6	MLEVP1185FCZZ	AC	DJ	PS front actuator	PS 前ｱｸﾁｭｴｰﾀｰ			
7	MSPRD3378FHZZ	AQ	EQ	Actuator return spring	ｱｸﾁｭｴｰﾀｰ復帰ｽﾌﾟﾘﾝｸﾞ			
8	XEBS730P08000	AC	DD	Screw(3×8)	ﾋﾞｽ			
9	VHPSG2A241+-1	AG	DX	Photo sensor(SG2A241)	ﾌｫﾄｾﾝｻｰ			
10	NRŌLP1517FCZZ	AA	DJ	Transport follower roller	搬送従動ﾛｰﾗｰ			
11	NSFTZ0249QSZZ	AT	EZ	Transport follower shaft	搬送従動ﾛｰﾗｰ軸			
12	MSPRD4047FHZZ	AQ	EQ	Paper feed shaft earth spring	給紙軸ｱｰｽｽﾌﾟﾘﾝｸﾞ			
13	MLEVP0220QSZZ	AX	FQ	Paper enter detect actuator	入紙検知ｱｸﾁｭｴｰﾀｰ			
14	XPSSP20-10000	AA	DD	Spring pin(2×10)	ｽﾌﾟﾘﾝｸﾞﾋﾟﾝ			
15	NGERH2309FCZZ	AD	DJ	Pick up roller gear(18T)	ﾋﾟｯｸｱｯﾌﾟﾛｰﾗｰｷﾞｱ			
16	XRESP50-06000	AA	DD	E ring(E5)	E ﾘﾝｸﾞ			
17	NBRGM0968FCZZ	AC	DD	Bearing(φ6)	軸受			
18	XPSSJ20-08000	AA	DD	Spring pin(φ2-8)	ｽﾌﾟﾘﾝｸﾞﾋﾟﾝ			
19	MLEVP0953FCZZ	AC	DJ	PE actuator	PE ｱｸﾁｭｴｰﾀｰ			
20	MSPRD3582FHZZ	AQ	EQ	SPED actuactor spring	SPED ｱｸﾁｭｴｰﾀｰｽﾌﾟﾘﾝｸﾞ			
21	PGiDM0325QSZZ	BE	GN	Upper door PG	上ﾄﾞｱ PG			
22	PMLT-1652FHZZ	AM	EG	Pick up damper cushion	呼込消音ﾓﾙﾄ			
23	MLEVP0221QSZZ	AR	EQ	Top cover open actuator	ﾄｯﾌﾟｶﾊﾞｰ開閉ｱｸﾁｭｴｰﾀｰ			
24	NSFTZ0247QSZZ	AX	FQ	Separation shaft	分離軸			
25	XRESP40-06000	AA	DD	E ring(E4)	E ﾘﾝｸﾞ			
26	PCLC-0339FCZZ	BE	GN	Pickup torque limiter	呼込みﾄﾙｸﾘﾐｯﾀｰ			
27	LHLDZ0336QSZZ	AX	FQ	Pick holder	ﾋﾟｯｸﾎﾙﾀﾞｰ			
28	NSFTZ0248QSZZ	AW	FG	Pick shaft	ﾋﾟｯｸｼｬﾌﾄ			
29	NPLYZ0437FCZZ	AT	EZ	Paper feed pulley	給紙ﾌﾟｰﾘｰ			
30	NBLTH0442FHZZ	AR	EQ	Pick belt	ﾋﾟｯｸﾍﾞﾙﾄ			
31	NPLYZ0535FCZZ	AC	DJ	Pickup pulley	ﾋﾟｯｸｱｯﾌﾟﾌﾟｰﾘｰ			
32	NRŌLR0295QSZZ	AR	FX	Pick roller	ﾋﾟｯｸﾛｰﾗｰ			
33	NCPL-0081FCZZ	AH	DX	One way coupling	ﾜﾝｳｪｲｶｯﾌﾟﾘﾝｸﾞ			
34	NRŌLR1541FCAZ	AG	DX	Paper feed separate roller	給紙分離ﾛｰﾗｰ			
35	MARMP0105QSZZ	BB	GD	Pick arm	ﾋﾟｯｸｱｰﾑ			
36	PGiDM0326QSZZ	AX	FQ	Upper door cap	上ﾄﾞｱｷｬｯﾌﾟ			
37	PSHEP6047FHZZ	AM	EG	Deskew idle mylar	搬送ｱｲﾄﾞﾙﾏｲﾗｰ			
38	LX-BZ0085QSPZ	AC	DD	Screw	ﾋﾞｽ			
	⇔ LX-BZ0040QSZZ	AC	DD	Step screw	段ﾋﾞｽ	1	Productivity improvement	18/Dec
39	TLABZ1115QSZZ	AW	FG	Clean note label	清掃注意ﾗﾍﾞﾙ			
40	PSHEP1067QSZZ	AW	FG	PS rear sheet	PS 後ｼｰﾄ			
	(Unit)							
901	DUNT-1414QSZZ	BT	NE	Top cover unit	上ｶﾊﾞｰﾕﾆｯﾄ			

【009】

DSPF 上ﾄﾞｱﾕﾆｯﾄ (DSPF Upper door unit)[MX-B455W,MX-B455WZ]

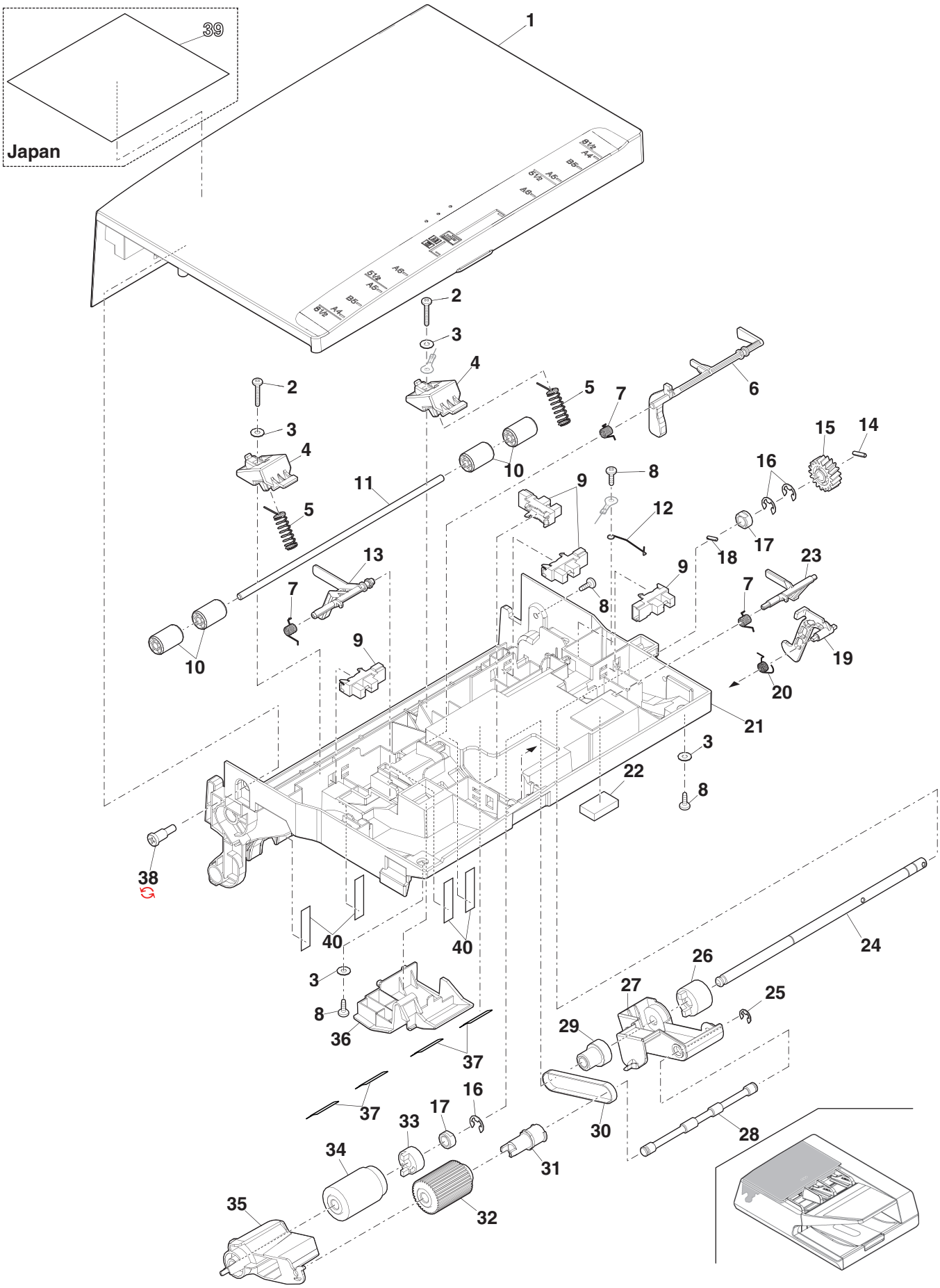

Update : 2018/Nov/9

【010】

DSPF 上搬送部 (DSPF Upper transport section)[MX-B455W,MX-B455WZ]

NO.	PARTS CODE	PRICE RANK Ex.	PRICE RANK Ja.	DESCRIPTION		Inter-change	Reason for change	Effective time
1	ＬＳＴＰＰ００１１ＱＳＺＺ	AC	DJ	Resin ring(E3)	樹脂ﾘﾝｸﾞ			
2	ＬＨＬＤＺ０３３８ＱＳＺＺ	AX	FQ	Separate holder	剥離ﾎﾙﾀﾞｰ			
3	ＮＳＦＴＺ３９０４ＦＨＺＺ	AR	EQ	Separation shaft	分離軸			
4	ＸＰＳＳＪ２０－０８０００	AA	DD	Spring pin(φ2-8)	ｽﾌﾟﾘﾝｸﾞﾋﾟﾝ			
5	ＸＲＥＳＰ４０－０６０００	AA	DD	E ring(E4)	Ｅﾘﾝｸﾞ			
6	ＮＲＯＬＲ０１６６ＱＳＡＺ	AX	ZZ	Paper feed separate roller	給紙分離ﾛｰﾗｰ			
7	ＰＣＬＣ－０３３８ＦＣＺＺ	BE	GN	Torque limiter	ﾄﾙｸﾘﾐｯﾀｰ			
8	ＭＳＰＲＣ４５６７ＦＨＺ１	AQ	EQ	Separation spring	剥離ｽﾌﾟﾘﾝｸﾞ			
9	ＰＳＨＥＺ５４６２ＦＣＺ１	AD	DJ	Front separate sheet	前捌きｼｰﾄ			
10	ＰＳＨＥＰ６０４７ＦＨＺＺ	AM	EG	Deskew idle mylar	搬送ｱｲﾄﾞﾙﾏｲﾗｰ			
11	ＰＭＬＴ－１９７５ＦＨＺＺ	AM	EG	Actuator damper cushion	ｱｸﾁｭｴｰﾀｰ消音ﾓﾙﾄ			
12	ＸＨＢＳ７３０Ｐ０６０００	AC	DD	Screw(3×6)	ﾋﾞｽ			
13	ＰＳＨＥＺ６０６６ＦＣＺＺ	AC	DJ	Rotation plate sheet	回転板ｼｰﾄ			
14	ＰＧｉＤＭ０３２７ＱＳＺＺ	AZ	FX	Separate paper guide	分離ﾍﾟｰﾊﾟｰｶﾞｲﾄﾞ			
15	ＭＳＰＲＤ３３７８ＦＨＺＺ	AQ	EQ	Actuator return spring	ｱｸﾁｭｴｰﾀｰ復帰ｽﾌﾟﾘﾝｸﾞ			
16	ＬＳＴＰＰ００３０ＱＳＺＺ	BB	GD	Original stopper	原稿ｽﾄｯﾊﾟｰ			
17	ＭＬＥＶＰ０２２２ＱＳＺＺ	AX	FQ	Reading front actuator	読み取り前ｱｸﾁｭｴｰﾀｰ			
18	ＭＳＰＲＤ４０４５ＦＨＺＺ	AQ	EQ	Reading front actuator spring	読取前ｱｸﾁｭｴｰﾀｰｽﾌﾟﾘﾝｸﾞ			
19	ＭＬＥＶＰ０２２３ＱＳＺＺ	AY	FQ	SPPD4 sensor flag	SPPD4 ｾﾝｻｰｱｰﾑ			
20	ＰＧｉＤＭ０３２８ＱＳＺＺ	AY	FQ	Transport paper guide	搬送ﾍﾟｰﾍﾟｰｶﾞｲﾄﾞ			
21	ＰＳＨＥＰ１０４８ＱＳＺＺ	AN	EQ	2nd read gide mylar	2nd 読取ｶﾞｲﾄﾞﾏｲﾗｰ			
22	ＭＳＰＲＣ３３５３ＦＨＺＺ	AQ	EQ	Reading plate spring	読取板ｽﾌﾟﾘﾝｸﾞ			

【010】

DSPF 上搬送部 (DSPF Upper transport section)[MX-B455W,MX-B455WZ]

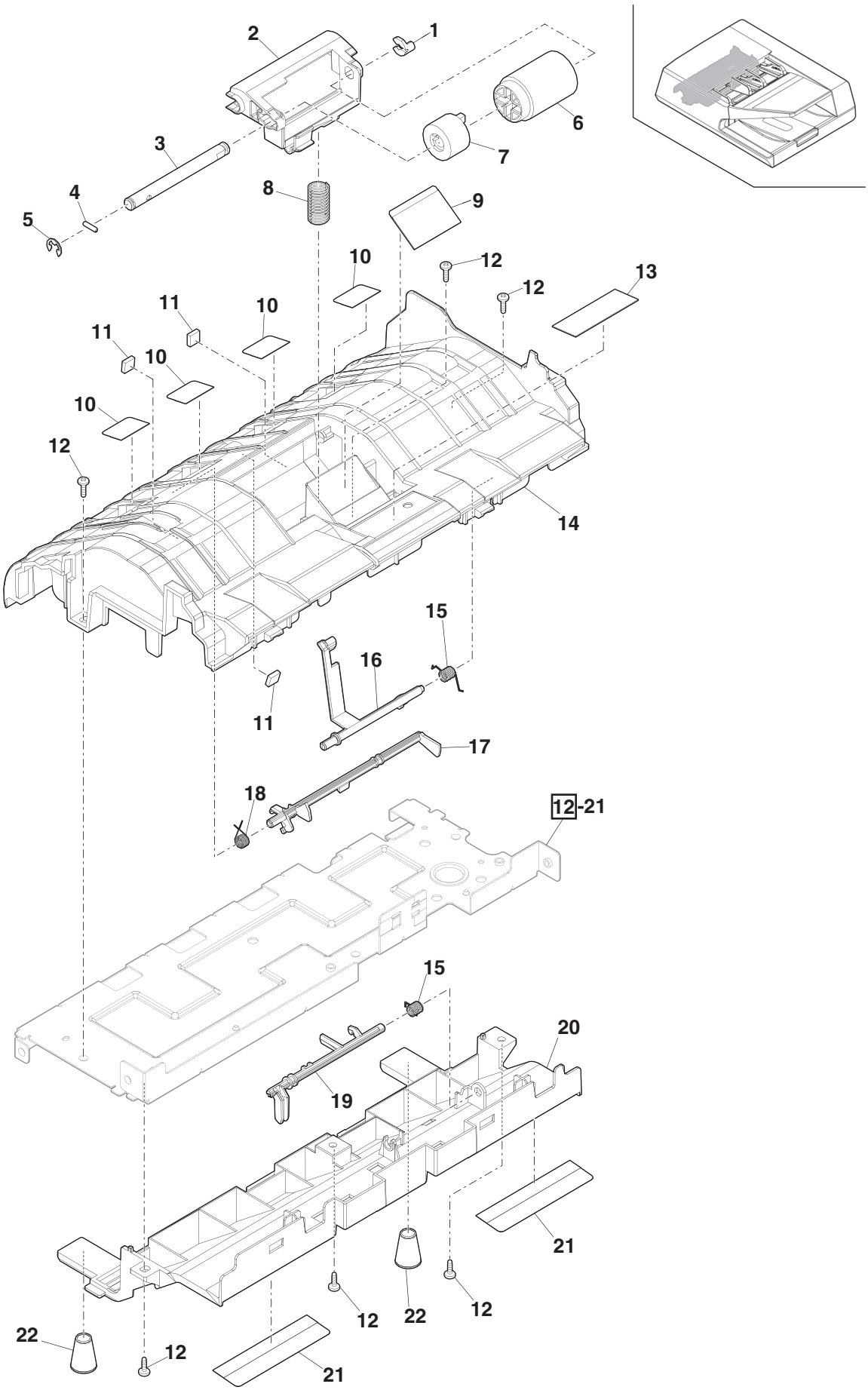

Update : 2018/Nov/9

【011】

DSPF 下搬送部 (DSPF Lower transport section)[MX-B455W,MX-B455WZ]

NO.	PARTS CODE	PRICE RANK Ex.	PRICE RANK Ja.	DESCRIPTION		Inter-change	Reason for change	Effective time
1	ＰＳＨＥＰ１０２９ＱＳＺＺ	AQ	EQ	Calibration strip	ｷｬﾘﾌﾞﾚｰｼｮﾝｼｰﾄ			
2	ＰＧｉＤＭ０３２９ＱＳＺＺ	AX	FQ	Duplex presssure bar bracket	両面加圧板ﾌﾞﾗｹｯﾄ			
3	ＭＳＰＲＣ０７３９ＱＳＺＺ	AQ	EQ	Duplex base Presure spring	ﾃﾞｭｰﾌﾟﾚｯｸｽ台板加圧ｽﾌﾟﾘﾝｸﾞ			
4	ＰＳＨＥＰ１０４０ＱＳＺＺ	AN	EQ	1st scan 2 mylar	1st ｽｷｬﾝ 2 ﾏｲﾗｰ			
5	ＰＣＯＶＰ０２７２ＱＳＺＺ	AX	FQ	LID cover	LID ｶﾊﾞｰ			
6	ＰＳＨＥＰ６０４７ＦＨＺＺ	AM	EG	Deskew idle mylar	搬送ｱｲﾄﾞﾙﾏｲﾗｰ			
7	ＶＨＰＳＧ２Ａ２４１＋－１	AG	DX	Photo sensor(SG2A241)	ﾌｫﾄｾﾝｻｰ			
8	ＬＤＡｉＺ００７９ＱＳＺＺ	BS	MW	Base tray	ﾍﾞｰｽﾄﾚｲ			
9	ＬＳＯＵ－００９０ＱＳＺＺ	AY	FQ	Delivery extension tray	排紙延長ﾄﾚｲ			
10	ＬＨＬＤＺ０３４１ＱＳＺＺ	AX	FQ	Extend tray holder	延長ﾄﾚｲﾎﾙﾀﾞｰ			
11	ＸＥＢＳ７３０Ｐ０８０００	AC	DD	Screw(3×8)	ﾋﾞｽ			
12	ＣＣＬＥＺ０２１３ＦＣ５１	AX	FQ	CIS glass cleaner unit	CIS ｶﾞﾗｽｸﾘｰﾅｰﾕﾆｯﾄ			
13	ＭＳＰＲＣ３３５６ＦＨＺＺ	AQ	EQ	Stopper spring	ｽﾄｯﾊﾟｰｽﾌﾟﾘﾝｸﾞ			
14	ＰＴＭＥ－００３０ＱＳＺ１	AC	DJ	Open/Close lock pawl	開閉ﾛｯｸ爪			
15	ＭＬＥＶＰ０２２４ＱＳＺＺ	AY	FQ	SPOD sensor flag	SPOD ｾﾝｻｰｱｰﾑ			
16	ＭＳＰＲＤ３３７８ＦＨＺＺ	AQ	EQ	Actuator return spring	ｱｸﾁｭｴｰﾀｰ復帰ｽﾌﾟﾘﾝｸﾞ			
17	ＮＲＯＬＰ０２８５ＱＳＺＺ	AR	EQ	Idler roller	従動ﾛｰﾗｰ			
18	ＮＳＦＴＺ０２５３ＱＳＺＺ	AT	EZ	Idler shaft	従動ｼｬﾌﾄ			
19	ＭＳＰＲＣ３３５８ＦＨＺＺ	AQ	EQ	2nd scan idler spring	2nd ｽｷｬﾝ従動ｽﾌﾟﾘﾝｸﾞ			
20	ＭＳＰＲＰ０７４２ＱＳＺＺ	AR	EQ	Follower roller fixing plate	従動ﾛｰﾗｰ押え板			
21	ＸＨＢＳ７３０Ｐ０６０００	AC	DD	Screw(3×6)	ﾋﾞｽ			
22	ＰＧＳＫ－００７７ＦＣＺＺ	AE	DS	Gasket FL	ｶﾞｽｹｯﾄ FL			
23	ＰＣＯＶＰ０２７１ＱＳＺＺ	AX	FQ	Scan bracket cover	ｽｷｬﾝﾌﾞﾗｹｯﾄｶﾊﾞｰ			
24	ＰＳＨＥＰ１０２８ＱＳＺＺ	AN	EQ	1st scan mylar	1st ｽｷｬﾝﾏｲﾗｰ			
25	ＮＳＦＴＰ３４２８ＦＣＺＺ	AC	DJ	Read front follower shaft	読取前従動軸			
26	ＮＲＯＬＰ１５１７ＦＣＺＺ	AA	DJ	Transport follower roller	搬送従動ﾛｰﾗｰ			
27	ＭＳＰＲＣ３４１３ＦＨＺＺ	AQ	EQ	1st scan idler spring	1st ｽｷｬﾝ従動ｽﾌﾟﾘﾝｸﾞ			
28	ＬＨＬＤＺ０３４０ＱＳＺＺ	AS	EZ	Idler base	ｱｲﾄﾞﾗｰﾍﾞｰｽ			
29	ＰＳＨＥＰ１０２７ＱＳＺＺ	AM	EG	1st LID mylar	1st ILD ﾏｲﾗｰ			
30	ＰＳＰＯ－００４２ＱＳＺＺ	AN	EQ	OC mat fixing sponge	OC ﾏｯﾄ取付ｽﾎﾟﾝｼﾞ			
31	ＰＳＨＥＺ１０３１ＱＳＺＺ	AQ	EQ	OC mat fixing fastener	OC ﾏｯﾄ取付面ﾌｧｽﾅｰ			
	(Unit)							
901	ＤＵＮＴ－１４１８ＱＳＺＺ	BT	NE	Base tray unit	ﾍﾞｰｽﾄﾚｲﾕﾆｯﾄ			

【011】

DSPF 下搬送部 (DSPF Lower transport section)[MX-B455W,MX-B455WZ]

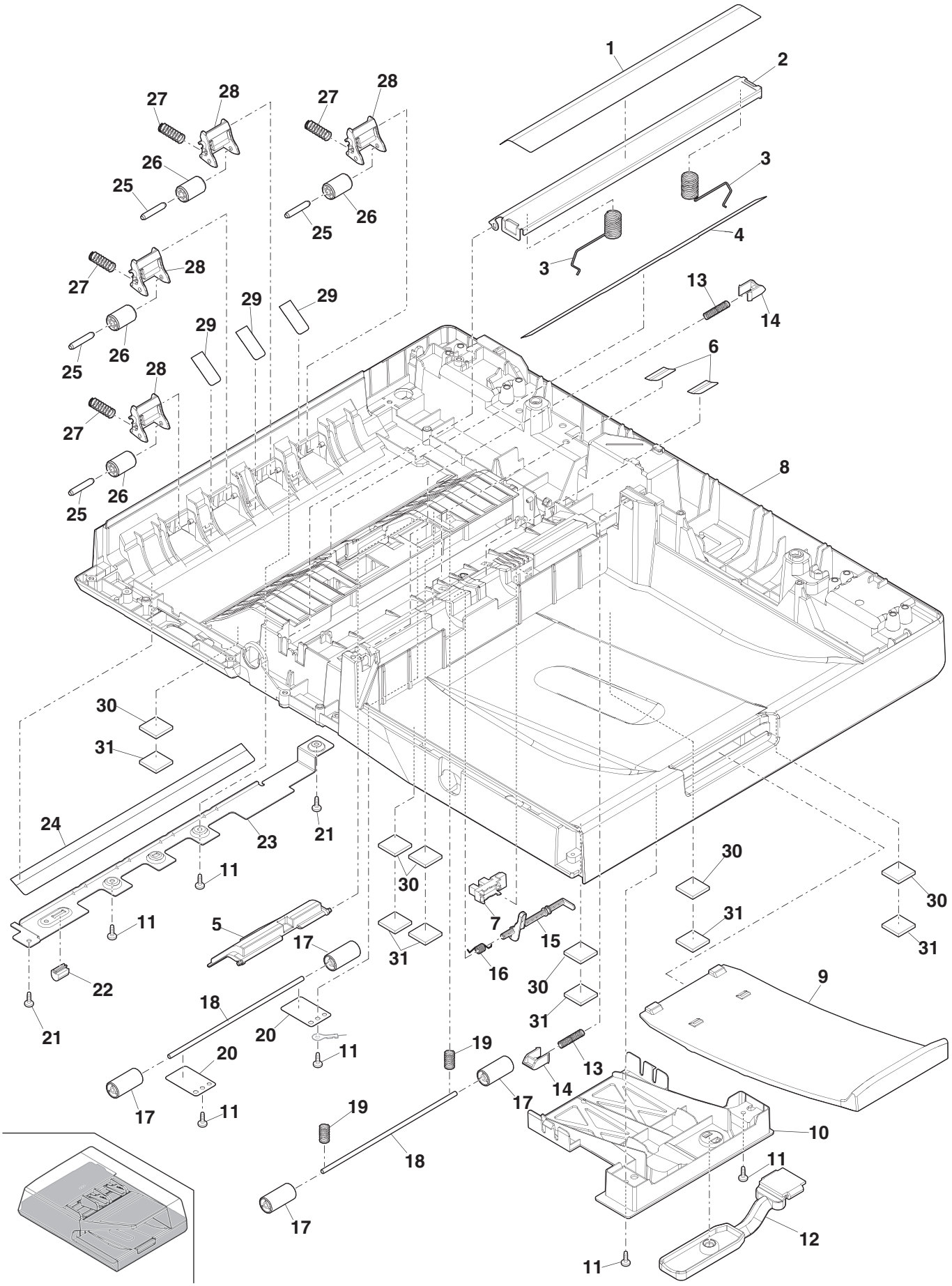

Update : 2018/Nov/9

【012】

DSPF 駆動部 1 (DSPF Drive section 1)[MX-B455W,MX-B455WZ]

NO.	PARTS CODE	PRICE RANK Ex.	PRICE RANK Ja.	DESCRIPTION		Inter-change	Reason for change	Effective time
1	XRESP50-06000	AA	DD	E ring(E5)	Eﾘﾝｸﾞ			
2	XWHS760-08115	AA	DD	Washer(φ6-11)	ﾜｯｼｬｰ			
3	MSPRC4040FHZZ	AQ	EQ	Brake spring	ﾌﾞﾚｰｷｽﾌﾟﾘﾝｸﾞ			
4	LX-WZ0448FHZZ	AQ	EQ	Poly slider(6-12)	ﾎﾟﾘｽﾗｲﾀﾞｰ			
5	NBRGM0051QSZZ	AB	DJ	Bearing(φ6 PIB21)	軸受			
6	CFRM-0188QS01	AY	FQ	Rear bracket	後ﾌﾞﾗｹｯﾄ			
7	NGERH0433QSZZ	AD	DD	Gear(32T)	ｷﾞｱ			
8	XPSSP20-10000	AA	DD	Spring pin(2×10)	ｽﾌﾟﾘﾝｸﾞﾋﾟﾝ			
9	XRESP40-06000	AA	DD	E ring(E4)	Eﾘﾝｸﾞ			
10	NGERH0022QSZZ	AC	DJ	Gear(33T)	ｷﾞｱ			
11	XHBS730P06000	AC	DD	Screw(3×6)	ﾋﾞｽ			
12	NBRGC0017QSZZ	AC	DJ	Bearing(B-F6-10)	軸受			
13	MSPRP0740QSZZ	AR	EQ	Ground plate	ｱｰｽ板			
14	LHLDZ2078FCZZ	AC	DJ	Stopper holder	ｽﾄｯﾊﾟｰﾎﾙﾀﾞｰ			
15	MSPRC3356FHZZ	AQ	EQ	Stopper spring	ｽﾄｯﾊﾟｰｽﾌﾟﾘﾝｸﾞ			
16	PTME-0030QSZ1	AC	DJ	Open/Close lock pawl	開閉ﾛｯｸ爪			
17	NRŌLR0286QSZZ	AY	FQ	Feed roller	搬送ﾛｰﾗｰ			
18	NRŌLR0287QSZZ	BK	HG	Feed roller 1	搬送ﾛｰﾗｰ 1			
19	VHPSG2A241+-1	AG	DX	Photo sensor(SG2A241)	ﾌｫﾄｾﾝｻｰ			
20	MSPRP0741QSZZ	AR	EQ	Core ground plate	ｺｱｱｰｽ板			
21	LSTYM0029QSZZ	AY	FQ	Core bracket	ｺｱﾌﾞﾗｹｯﾄ			
22	PSHEP6047FHZZ	AM	EG	Deskew idle mylar	搬送ｱｲﾄﾞﾙﾏｲﾗｰ			
23	LPLTM1009QSZZ	AX	FQ	Reading plate	読取板			
24	PSHEP1026QSZZ	AR	EQ	White sheet	白ｼｰﾄ			
25	NRŌLR0288QSZZ	BB	GD	Feed roller 2	搬送ﾛｰﾗｰ 2			
26	NRŌLR0289QSZZ	BB	GD	Feed roller 3	搬送ﾛｰﾗｰ 3			
27	NRŌLR0290QSZZ	BB	GD	Feed roller 4	搬送ﾛｰﾗｰ 4			
28	CFRM-0187QS01	AZ	FX	Front bracket	前ﾌﾞﾗｹｯﾄ			
29	NGERH0537QSZZ	AQ	EQ	Gear(32T)	ｷﾞｱ			
30	NPLYZ0074QSZZ	AR	EQ	Pulley(43P37T)	ﾌﾟｰﾘｰ			
31	NBLTH0070QSZZ	AX	FQ	Belt(S2M-308)	ﾍﾞﾙﾄ			
32	PCLR-0520FCZZ	AB	DJ	Tension collar	ﾃﾝｼｮﾝｺﾛ			
33	NPLYZ0453FCZZ	AC	DJ	Drive pulley(24P)	駆動ﾌﾟｰﾘｰ			
34	LHLDZ0339QSZZ	AS	EZ	Arm holder	ｱｰﾑﾎﾙﾀﾞｰ			
35	MLEVP0095QSZZ	AD	DJ	Book sensor actuator	ﾌﾞｯｸｾﾝｻｰｱｸﾁｭｴｰﾀｰ			
36	MSPRC0153SSZZ	AQ	EQ	SOCD sensor spring	SOCD ｾﾝｻｰｽﾌﾟﾘﾝｸﾞ			
37	NPLYZ0072QSZZ	AR	EQ	JAM release knob	JAM 解除ﾉﾌﾞ			
38	XHBS740P08000	AA	DD	Screw(4×8)	ﾋﾞｽ			
39	LPLTP0131QSZ1	AD	DJ	Book sensor fixing plate	ﾌﾞｯｸｾﾝｻｰ取付板			
40	CPLTM1011QS01	AX	FQ	Belt bracket 3	ﾍﾞﾙﾄﾌﾞﾗｹｯﾄ 3			
41	XWHS730-05080	AA	DD	Washer(φ3-8)	ﾜｯｼｬｰ			
42	MSPRT0745QSZZ	AQ	EQ	Belt 3 spring	ﾍﾞﾙﾄ 3 ｽﾌﾟﾘﾝｸﾞ			
43	XHBS730P10000	AD	DD	Screw(3×10)	ﾋﾞｽ			

【012】
DSPF 駆動部 1 (DSPF Drive section 1)[MX-B455W,MX-B455WZ]

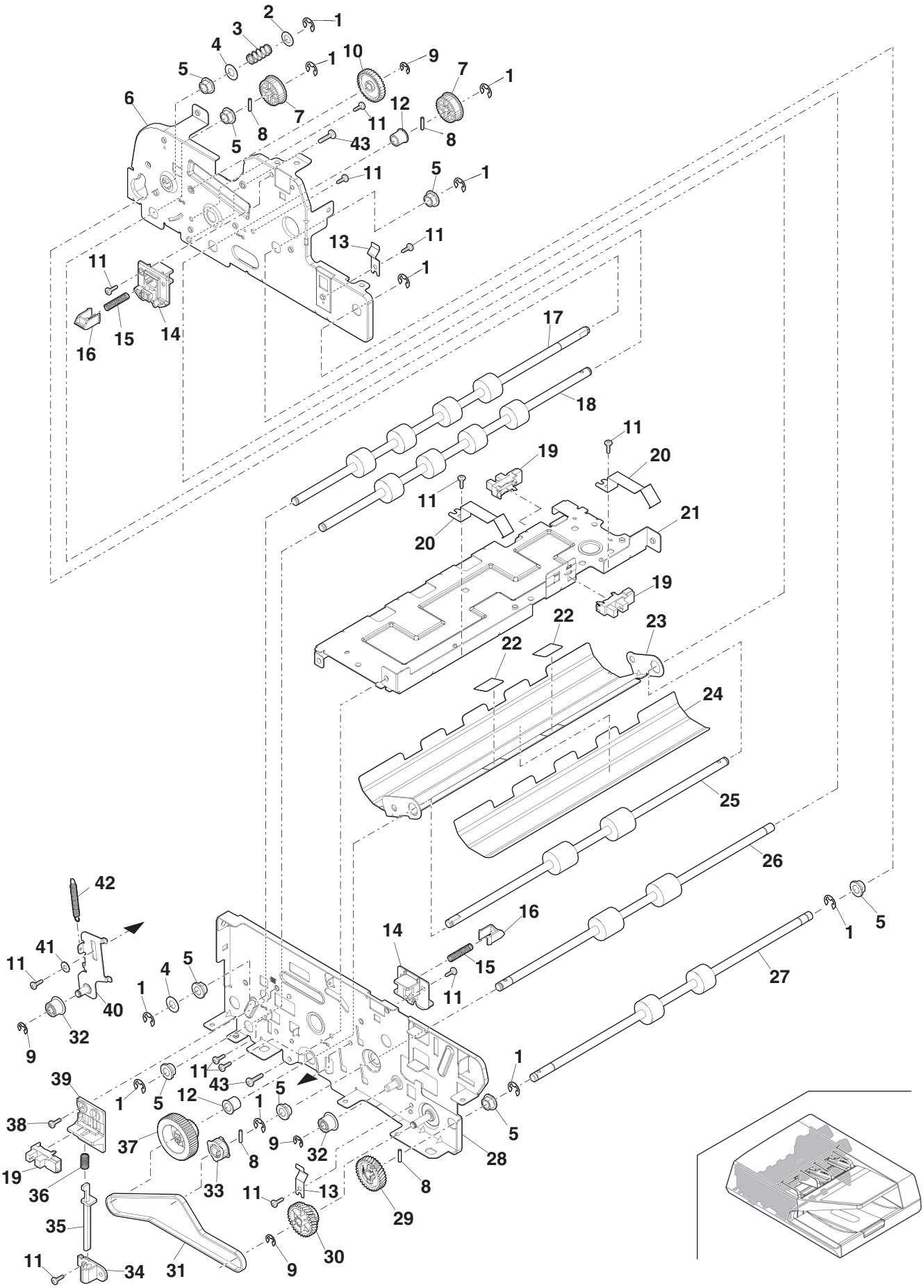

Update : 2018/Nov/9

【013】

DSPF 駆動部 2 (DSPF Drive section 2)[MX-B455W,MX-B455WZ]

NO.	PARTS CODE	PRICE RANK Ex.	PRICE RANK Ja.	DESCRIPTION		Inter-change	Reason for change	Effective time
1	XHBS730P06000	AC	DD	Screw(3×6)	ﾋﾞｽ			
2	RMOTS0109QSPZ	BF	GN	Motor	ﾓｰﾀｰ			
3	LPLTM1008QSZZ	AW	FG	Belt bracket 1	ﾍﾞﾙﾄﾌﾞﾗｹｯﾄ 1			
4	XWHS730-05080	AA	DD	Washer(φ3-8)	ﾜｯｼｬｰ			
5	MSPRT0743QSZZ	AQ	EQ	Belt 2 spring	ﾍﾞﾙﾄ 2 ｽﾌﾟﾘﾝｸﾞ			
6	CPLTM1007QS01	AY	FQ	Motor bracket	ﾓｰﾀｰﾌﾞﾗｹｯﾄ			
7	NBLTH0067QSZZ	AR	EQ	Belt(S2M-140)	ﾍﾞﾙﾄ			
8	NPLYZ0071QSZZ	AQ	EQ	Pulley(43P18T)	ﾌﾟｰﾘｰ			
9	XRESP50-06000	AA	DD	E ring(E5)	E ﾘﾝｸﾞ			
10	NBRGM0051QSZZ	AB	DJ	Bearing(φ6 PIB21)	軸受			
11	NSFTZ0251QSZZ	AR	EQ	Drive shaft	駆動軸			
12	NBLTH0069QSZZ	AX	FQ	Belt(S2M-166)	ﾍﾞﾙﾄ			
13	XPSSP20-10000	AA	DD	Spring pin(2×10)	ｽﾌﾟﾘﾝｸﾞﾋﾟﾝ			
14	NPLYZ0073QSZZ	AQ	EQ	Pulley(43P37T)	ﾌﾟｰﾘｰ			
15	CPLTM1010QS01	AX	FQ	Belt bracket 2	ﾍﾞﾙﾄﾌﾞﾗｹｯﾄ 2			
16	XRESP40-06000	AA	DD	E ring(E4)	E ﾘﾝｸﾞ			
17	PRNGP0006QSZZ	AQ	EQ	Flange	ﾌﾗﾝｼﾞ			
18	PCLR-0520FCZZ	AB	DJ	Tension collar	ﾃﾝｼｮﾝｺﾛ			
19	PCLC-0402FCZZ	AT	EZ	Clutch(3.5Kg)	ｸﾗｯﾁ			
20	NGERH2400FCZZ	AD	DJ	PS joint gear(32T)	PS 連結ｷﾞｱ			
21	MSPRT0744QSZZ	AQ	EQ	Belt 1 spring	ﾍﾞﾙﾄ 1 ｽﾌﾟﾘﾝｸﾞ			
22	NPLYZ0525FCZZ	AH	DX	Pulley(37P)(1WAY)	ﾌﾟｰﾘｰ			
23	NBLTH0068QSZZ	AX	FQ	Belt(S2M-224)	ﾍﾞﾙﾄ			

【013】
DSPF 駆動部 2 (DSPF Drive section 2)[MX-B455W,MX-B455WZ]

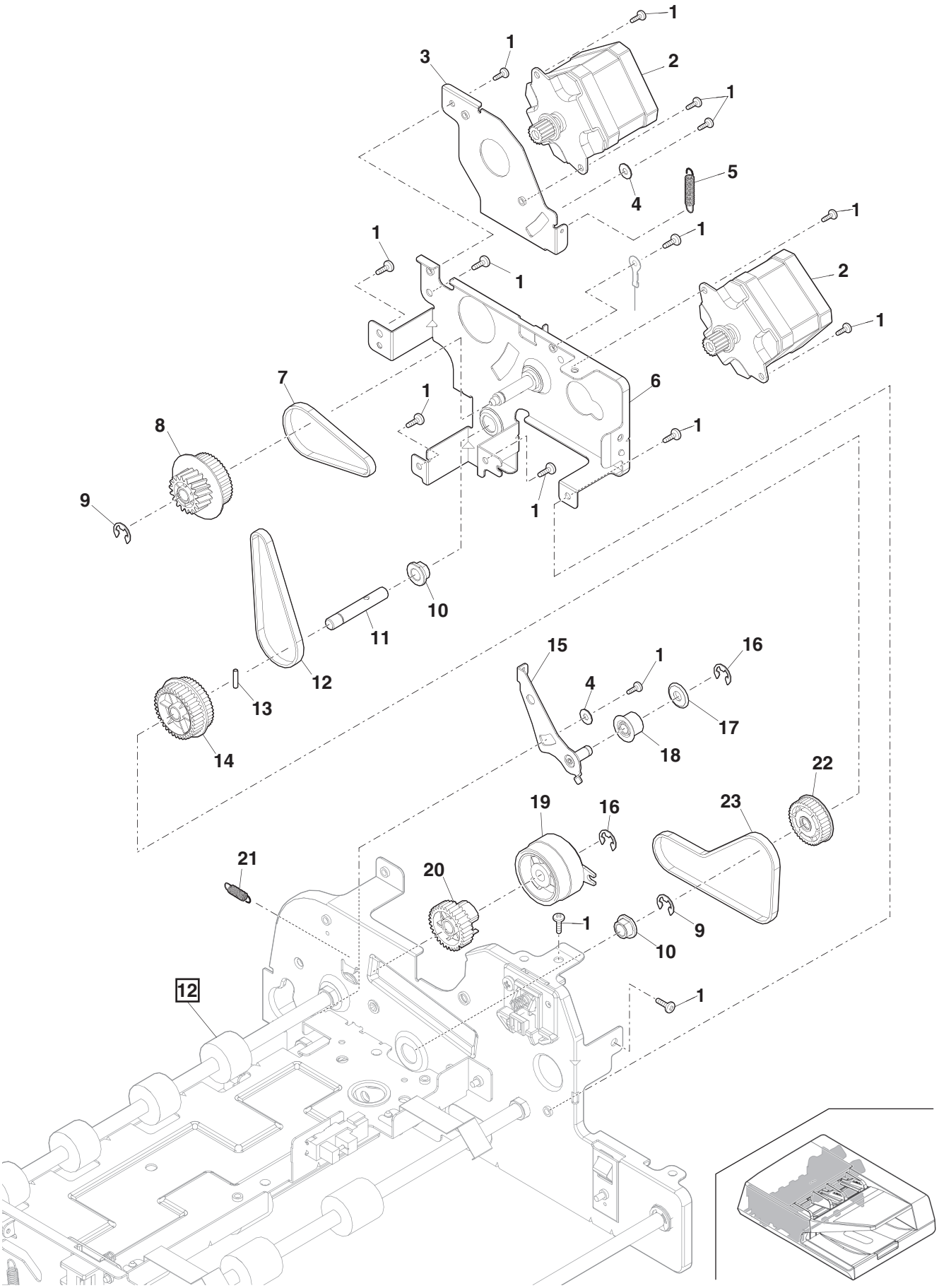

Update : 2018/Nov/9

【014】

RSPF 外装部 (RSPF Exteriors)[MX-B355W,MX-B355WZ,MX-B450W,MX-B350W,AR-B350W, MX-B450FZ,AR-B451F,MX-B350FZ,AR-B351FT,MX-B450Z,AR-B451T,MX-B350Z,AR-B351T]

NO.	PARTS CODE	PRICE RANK Ex.	PRICE RANK Ja.	DESCRIPTION		Inter-change	Reason for change	Effective time
1	GCAB-0261QSZZ	BD	GN	ADF cover	ADF ｶﾊﾞｰ			
2	NBRGM0051QSZZ	AB	DJ	Bearing(φ6 PIB21)	軸受			
3	NGERH0521QSZZ	AQ	EQ	Gear(15T)	ｷﾞｱ			
4	PRNGP0081FCZ1	AB	DJ	Resin ring(E4)	樹脂ﾘﾝｸﾞ			
5	PSPŌ-0037QSZZ	AQ	EQ	Pick up sponge	ﾋﾟｯｸｱｯﾌﾟｽﾎﾟﾝｼﾞ			
6	PGｉDM0315QSZZ	AX	FQ	adjust tray R	調整ﾄﾚｲ R			
7	PGｉDM0314QSZZ	AX	FQ	adjust tray L	調整ﾄﾚｲ L			
8	LSŌU-0085QSZZ	BD	GN	Original tray	原稿ﾄﾚｲ			
10	NGERR0538QSZZ	AV	FG	Rack width adjuster gear	ﾗｯｸ幅調整ｷﾞｱ			
11	XEPS730P08X00	AA	DD	Screw(3×8X)	ﾋﾞｽ			
12	NGERH0021QSZZ	AD	DJ	Manual paper feed gear	手差しｷﾞｱ			
13	PBRSR0050QSZZ	AX	FQ	Discharge brush	除電ﾌﾞﾗｼ			
14	GCAB-0262QSZZ	BE	GN	Rear cover	後ｶﾊﾞｰ			
15	XEBS730P08000	AC	DD	Screw(3×8)	ﾋﾞｽ			
16	GCAB-0263QSZZ	AZ	FX	Front cover	前ｶﾊﾞｰ			
17	NSFTB0237QSZZ	AR	EQ	Pick up roller shaft	呼込ﾛｰﾗｰ軸			
18	CRŌLR0280QS01	AT	FQ	Pick up roller	ﾋﾟｯｸｱｯﾌﾟﾛｰﾗｰ			
19	NGERH0520QSZZ	AQ	EQ	Gear(16T)	ｷﾞｱ			
20	LX-RZ0005QSZZ	AQ	EQ	Ring(D3)	止め輪			
21	NGERH0519QSZZ	AQ	EQ	Gear(23T)	ｷﾞｱ			
22	LHLDZ0321QSZZ	AX	FQ	Pick up plate	呼び込みﾌﾟﾚｰﾄ			
23	PCLC-0047QSZZ	AV	FG	One way clutch	ﾜﾝｳｪｲｸﾗｯﾁ			
24	NCPL-0039QSZZ	AQ	EQ	One way coupling	ﾜﾝｳｪｲｶｯﾌﾟﾘﾝｸﾞ			
25	CRŌLR0279QS01	AT	FQ	Separation roller	分離ﾛｰﾗｰ			
26	NSFTB0236QSZZ	AX	FQ	Roller separation shaft	ﾛｰﾗｰ分離ｼｬﾌﾄ			
27	XPSSP20-10000	AA	DD	Spring pin(2×10)	ｽﾌﾟﾘﾝｸﾞﾋﾟﾝ			
28	PCLC-0049QSZZ	AR	EQ	Pick up torque limiter	ﾋﾟｯｸｱｯﾌﾟﾄﾙｸﾘﾐｯﾀｰ			
29	NRŌLP0275QSZZ	AR	EQ	PF2 L roller	PF2 L ﾛｰﾗｰ			
30	NSFTB0238QSZZ	AT	EZ	PF1 roller shaft	PF1 ﾛｰﾗｰｼｬﾌﾄ			
31	MSPRC0710QSZZ	AQ	EQ	PF1 spring	PF1 ｽﾌﾟﾘﾝｸﾞ			
32	LHLDR0320QSZZ	AX	FQ	PF1 Roll frame	PF1 回転ﾌﾚｰﾑ			
501	CSŌU-0085QS51	BD	GN	Document tray unit	原稿ﾄﾚｲﾕﾆｯﾄ			
	(Unit)							
901	DUNT-1392QSZZ	CE	UH	RSPF unit	RSPF ﾕﾆｯﾄ			

【014】

RSPF 外装部 (RSPF Exteriors)[MX-B355W,MX-B355WZ,MX-B450W,MX-B350W,AR-B350W,MX-B450FZ,AR-B451F,MX-B350FZ,AR-B351FT,MX-B450Z,AR-B451T,MX-B350Z,AR-B351T]

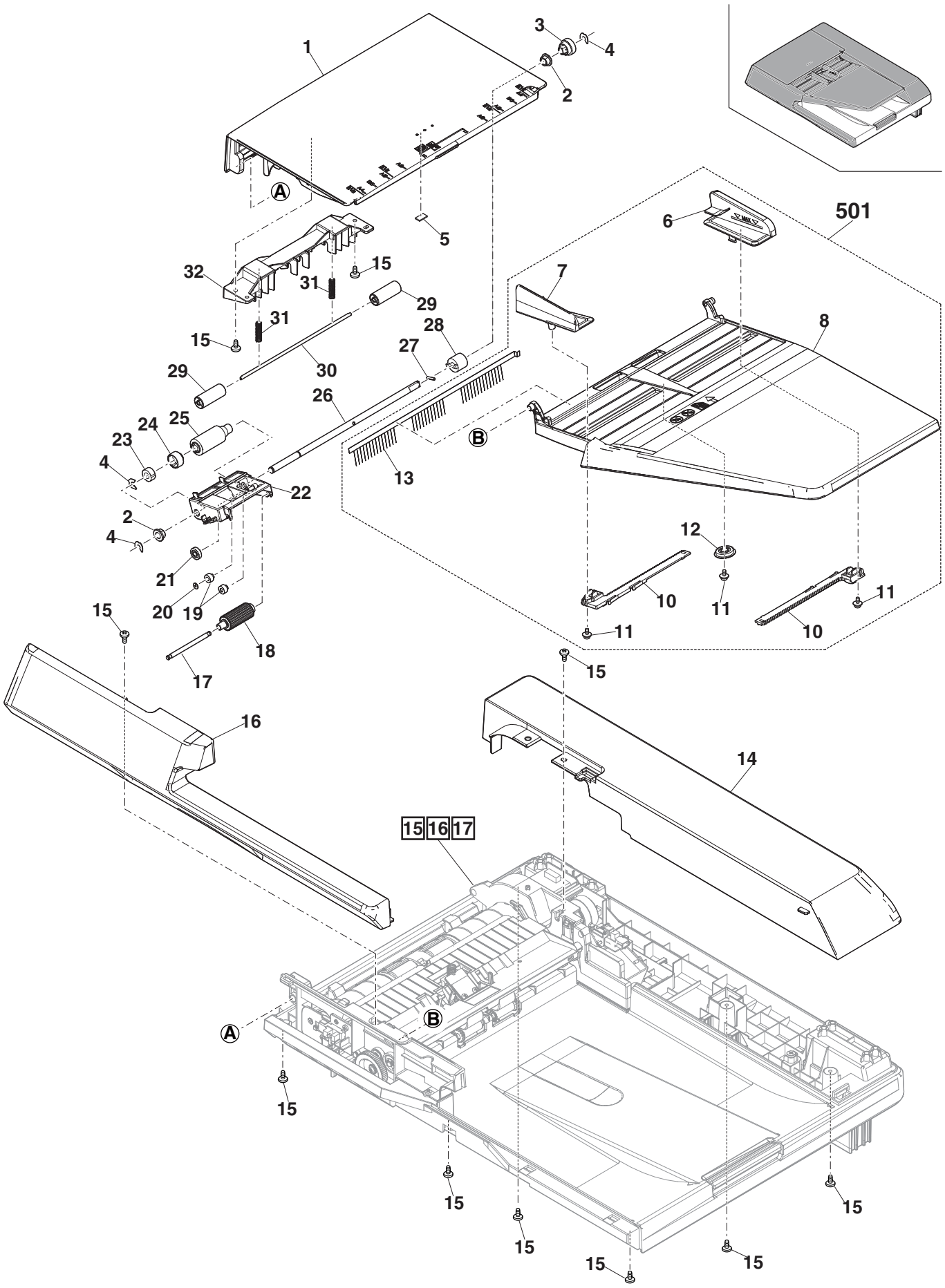

Update : 2018/Nov/9

【015】

RSPF 前ﾌﾚｰﾑ･上搬送部 (Front frame・Upper transport section)[MX-B355W,MX-B355WZ,MX-B450W, MX-B350W,AR-B350W,MX-B450FZ,AR-B451F,MX-B350FZ,AR-B351FT,MX-B450Z,AR-B451T,MX-B350Z,AR-B351T]

NO.	PARTS CODE	PRICE RANK Ex.	PRICE RANK Ja.	DESCRIPTION		Inter-change	Reason for change	Effective time
1	CHLDZ0324QS51	AT	EZ	Pad unit	ﾊﾟｯﾄﾞﾕﾆｯﾄ			
2	MSPRC0714QSZZ	AF	EZ	Pad spring	ﾊﾟｯﾄﾞｽﾌﾟﾘﾝｸﾞ			
3	PSHEP1015QSZZ	AK	EZ	Pick up cork	ﾋﾟｯｸｱｯﾌﾟｺﾙｸ			
4	PGiDM0313QSZZ	AY	FQ	frame cover guide front	ﾌﾚｰﾑｶﾊﾞｰｶﾞｲﾄﾞ前			
5	VHPSG2A241+-1	AG	DX	Photo sensor(SG2A241)	ﾌｫﾄｾﾝｻｰ			
6	MLEVP0215QSZZ	AQ	EQ	Document sensor arm	原稿ｾﾝｻｰｱｰﾑ			
7	LSTPP0029QSZZ	AQ	EQ	Stopper	ｽﾄｯﾊﾟｰ			
8	MSPRD0718QSZZ	AQ	EQ	Stopper spring	ｽﾄｯﾊﾟｰｽﾌﾟﾘﾝｸﾞ			
9	PCOVP0264QSZZ	AX	FQ	Front frame cover	前ﾌﾚｰﾑｶﾊﾞｰ			
10	XEBS730P08000	AC	DD	Screw(3×8)	ﾋﾞｽ			
11	PSHEP1016QSZZ	AQ	EQ	Duplex L sheet	ﾃﾞｭｰﾌﾟﾚｯｸｽ L ｼｰﾄ			
12	NROLR0281QSZZ	BK	HG	PF1 roller	PF1 ﾛｰﾗｰ			
13	NROLR0282QSZZ	BK	HG	PF2 roller	PF2 ﾛｰﾗｰ			
14	NROLR0283QSZZ	BK	HG	EJ1 roller	EJ1 ﾛｰﾗｰ			
15	NROLR0284QSZZ	BK	HG	EJ2 roller	EJ2 ﾛｰﾗｰ			
16	MSPRD0716QSZZ	AQ	EQ	DP sensor spring	DP ｾﾝｻｰｽﾌﾟﾘﾝｸﾞ			
17	MLEVP0211QSZZ	AQ	EQ	DP sensor arm	DP ｾﾝｻｰｱｰﾑ			
18	NGERH0523QSZZ	AQ	EQ	Gear(30T)	ｷﾞｱ			
19	JKNBZ0014QSZZ	AQ	EQ	Knob(H26T)	ﾉﾌﾞ			
20	XEPS730P08X00	AA	DD	Screw(3×8X)	ﾋﾞｽ			
21	MLEVP0213QSZZ	AQ	EQ	ADF sensor arm	ADF ｾﾝｻｰｱｰﾑ			
22	NBRGM0051QSZZ	AB	DJ	Bearing(φ6 PIB21)	軸受			
23	NGERH0525QSZZ	AQ	EQ	Gear(40T)	ｷﾞｱ			
24	XRESP50-06000	AA	DD	E ring(E5)	E ﾘﾝｸﾞ			
25	QEARP0039QSZZ	AX	FQ	Roller grounding plate	ﾛｰﾗｰｱｰｽ板			
27	LHLDZ0322QSZZ	AW	FG	ADF sensor holder	ADF ｾﾝｻｰﾎﾙﾀﾞｰ			
28	PGiDM0311QSZZ	AZ	FX	frame cover guide upper	ﾌﾚｰﾑｶﾊﾞｰｶﾞｲﾄﾞ上			
	♻ PGiDM0311QSZ1	AZ	FX	frame cover guide upper	ﾌﾚｰﾑｶﾊﾞｰｶﾞｲﾄﾞ上	5	DCJ-1000 DCE-1099	18/Mar

【015】

RSPF 前ﾌﾚｰﾑ･上搬送部 (Front frame・Upper transport section)[MX-B355W,MX-B355WZ,MX-B450W, MX-B350W,AR-B350W,MX-B450FZ,AR-B451F,MX-B350FZ,AR-B351FT,MX-B450Z,AR-B451T,MX-B350Z,AR-B351T]

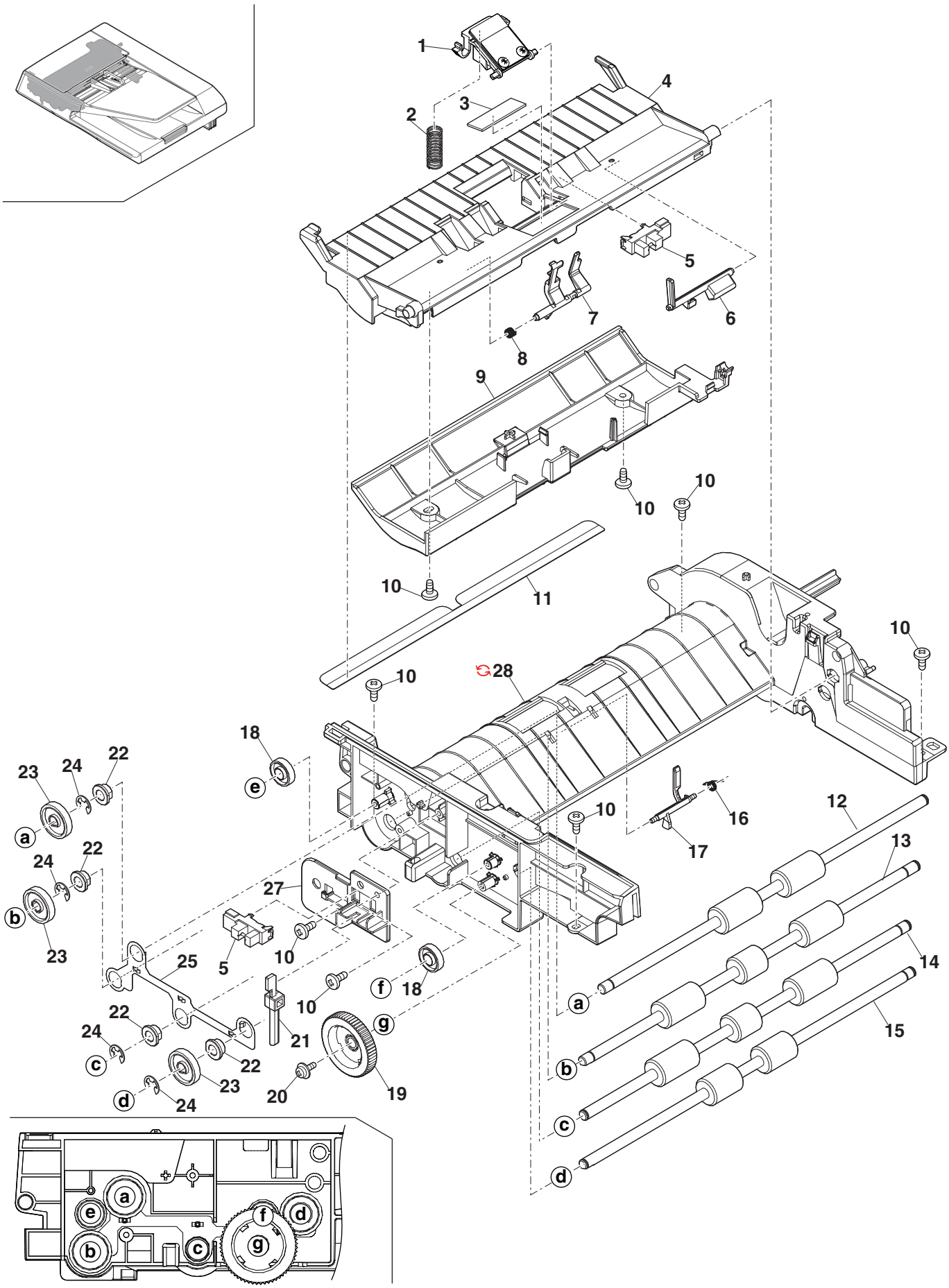

Update : 2018/Nov/9

【016】

RSPF 後ﾌﾚｰﾑ･下搬送 (Rear frame・Lower transport section)[MX-B355W,MX-B355WZ,MX-B450W,MX-B350W, AR-B350W,MX-B450FZ,AR-B451F,MX-B350FZ,AR-B351FT,MX-B450Z,AR-B451T,MX-B350Z,AR-B351T]

NO.	PARTS CODE	PRICE RANK		DESCRIPTION		Inter-change	Reason for change	Effective time
		Ex.	Ja.					
1	NGERH0523QSZZ	AQ	EQ	Gear(30T)	ｷﾞｱ			
2	NGERH0524QSZZ	AQ	EQ	Gear(36T)	ｷﾞｱ			
3	NGERH0527QSZZ	AQ	EQ	Gear(38T)	ｷﾞｱ			
4	QEARP0037QSZZ	AX	FQ	Grounding plate	ｱｰｽ板			
5	MSPRC0711QSZZ	AQ	EQ	PF grounding spring	PF ｱｰｽｽﾌﾟﾘﾝｸﾞ			
6	NBRGM0051QSZZ	AB	DJ	Bearing(φ6 PIB21)	軸受			
7	XRESP50-06000	AA	DD	E ring(E5)	E ﾘﾝｸﾞ			
8	PCLC-0047QSZZ	AV	FG	One way clutch	ﾜﾝｳｪｲｸﾗｯﾁ			
9	NGERH0522QSZZ	AQ	EQ	Gear(40T)	ｷﾞｱ			
10	NGERH0525QSZZ	AQ	EQ	Gear(40T)	ｷﾞｱ			
11	NGERH0528QSZZ	AQ	EQ	Gear(16T)	ｷﾞｱ			
12	NGERH2400FCZZ	AD	DJ	PS joint gear(32T)	PS 連結ｷﾞｱ			
13	NSFTZ0242QSZZ	AR	EQ	Clutch shaft	ｸﾗｯﾁ軸			
14	PCLC-0402FCZZ	AT	EZ	Clutch(3.5Kg)	ｸﾗｯﾁ			
15	XHBS730P06000	AC	DD	Screw(3×6)	ﾋﾞｽ			
16	LPLTM0987QSZZ	AX	FQ	Motor fixing plate	ﾓｰﾀｰ取付板			
17	XEBS730P08000	AC	DD	Screw(3×8)	ﾋﾞｽ			
18	RMŌTS0106QSPZ	BK	HG	Motor	ﾓｰﾀｰ			
19	PGｉDM0312QSZZ	AZ	FX	frame cover guide lower	ﾌﾚｰﾑｶﾊﾞｰｶﾞｲﾄﾞ下			
20	MSPRD0709QSZZ	AQ	EQ	Reading plate grounding spring	読取板ｱｰｽｽﾌﾟﾘﾝｸﾞ			
21	LPLTM0988QSZZ	AX	FQ	Reading plate	読取板			
22	PSHEP1011QSZZ	AQ	EQ	Reading sheet	読取ｼｰﾄ			
23	MSPRC0713QSZZ	AQ	EQ	Reading plate spring	読取板ｽﾌﾟﾘﾝｸﾞ			
24	MSPRD0717QSZZ	AQ	EQ	RS sensor spring	RS ｾﾝｻｰｽﾌﾟﾘﾝｸﾞ			
25	MLEVP0214QSZZ	AQ	EQ	RS sensor arm	RS ｾﾝｻｰｱｰﾑ			
26	VHPSG2A241+-1	AG	DX	Photo sensor(SG2A241)	ﾌｫﾄｾﾝｻｰ			
27	PSHEP1012QSZZ	AQ	EQ	Lower frame sheet	下ﾌﾚｰﾑｼｰﾄ			
28	MLEVP0212QSZZ	AQ	EQ	Cover sensor arm	ｶﾊﾞｰｾﾝｻｰｱｰﾑ			
29	LHLDZ0323QSZZ	AS	EZ	Arm cover sensor holder	ｱｰﾑｶﾊﾞｰｾﾝｻｰﾎﾙﾀﾞｰ			
30	MSPRC0712QSZZ	AQ	EQ	EJ grounding spring	EJ ｱｰｽｽﾌﾟﾘﾝｸﾞ			
31	QEARP0038QSZZ	AR	EQ	Brush plate	ﾌﾞﾗｼ板			
32	NGERH0526QSZZ	AQ	EQ	Gear(30T)	ｷﾞｱ			
33	XBBS730P06000	AC	DD	Screw(3×6)	ﾋﾞｽ			

【016】

RSPF 後ﾌﾚｰﾑ･下搬送 (Rear frame・Lower transport section)[MX-B355W,MX-B355WZ,MX-B450W,MX-B350W, AR-B350W,MX-B450FZ,AR-B451F,MX-B350FZ,AR-B351FT,MX-B450Z,AR-B451T,MX-B350Z,AR-B351T]

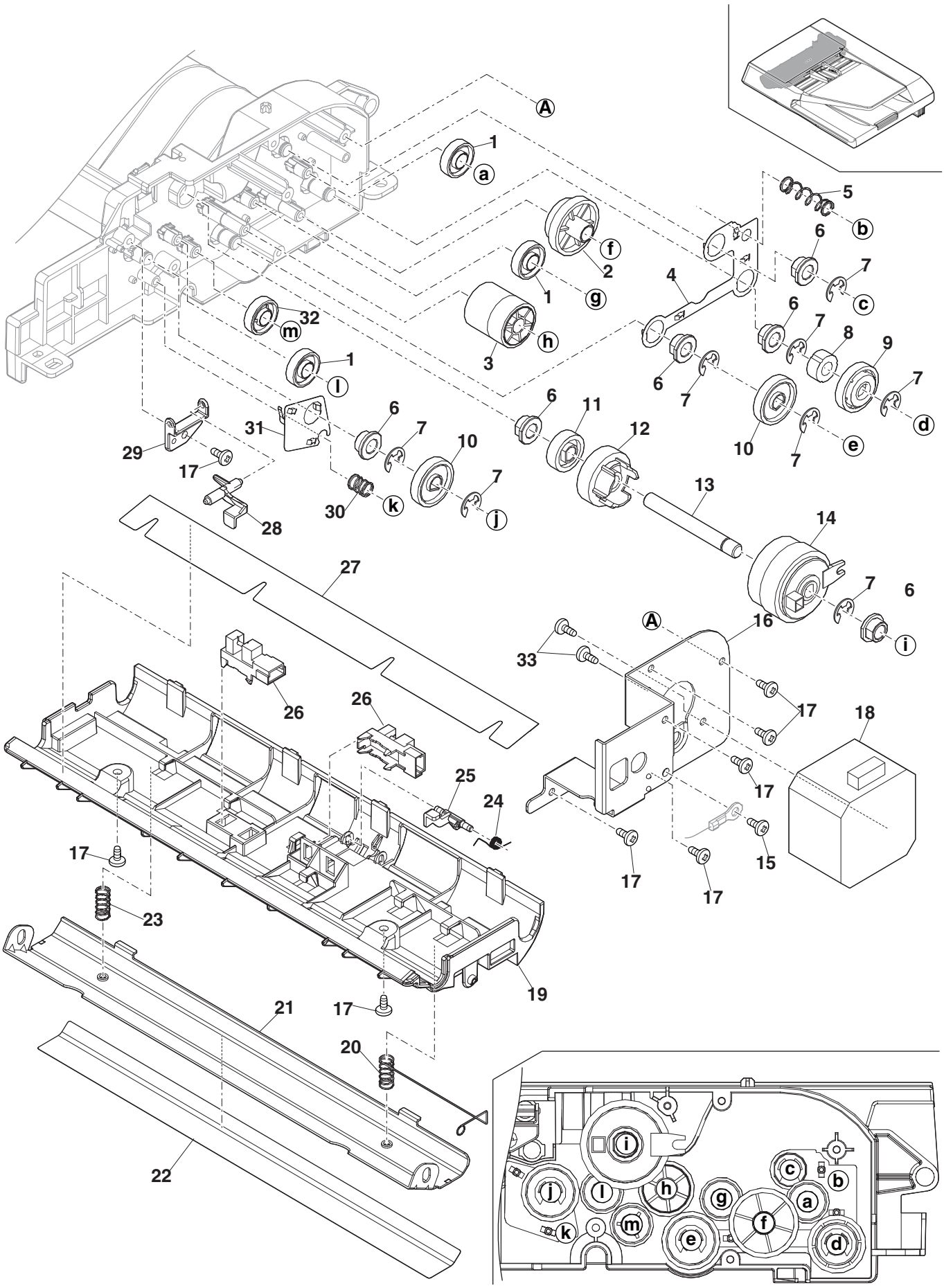

Update : 2018/Nov/9

【017】

RSPF ﾍﾞｰｽﾄﾚｲ (RSPF base tray)[MX-B355W,MX-B355WZ,MX-B450W,MX-B350W,AR-B350W, MX-B450FZ,AR-B451F,MX-B350FZ,AR-B351FT,MX-B450Z,AR-B451T,MX-B350Z,AR-B351T]

NO.	PARTS CODE	PRICE RANK Ex.	PRICE RANK Ja.	DESCRIPTION		Inter-change	Reason for change	Effective time
1	PSHEP1017QSZZ	AQ	EQ	In sheet	入紙ｼｰﾄ			
2	NBRGM0051QSZZ	AB	DJ	Bearing(φ6 PIB21)	軸受			
3	XRESP50-06000	AA	DD	E ring(E5)	E ﾘﾝｸﾞ			
4	VHPSG2A241+-1	AG	DX	Photo sensor(SG2A241)	ﾌｫﾄｾﾝｻｰ			
5	XEBS730P08000	AC	DD	Screw(3×8)	ﾋﾞｽ			
6	LPLTM0990QSZZ	AX	FQ	Solenoid plate	ｿﾚﾉｲﾄﾞﾌﾟﾚｰﾄ			
8	XBBS730P06000	AC	DD	Screw(3×6)	ﾋﾞｽ			
9	MLEVP0216QSZZ	AQ	EQ	EJ2 Roller arm	EJ2 ﾛｰﾗｰｱｰﾑ			
10	RPLUR0045QSZZ	BC	GJ	Solenoid	ｿﾚﾉｲﾄﾞ			
11	XEBS740P16000	AB	DD	Screw(4×16)	ﾋﾞｽ			
12	LDAiZ0076QSZZ	BQ	LP	Base tray	ﾍﾞｰｽﾄﾚｲ			
13	LSŌU-0084QSZZ	AX	FQ	Delivery extension tray	排紙延長ﾄﾚｲ			
14	MHNG-0041QSZZ	BC	GJ	ADF hinge R	ADF ﾋﾝｼﾞ R			
15	MHNG-0042QSZZ	BC	GJ	ADF hinge L	ADF ﾋﾝｼﾞ L			
16	CSHEP1019QS51	AY	FQ	OC mat	OC ﾏｯﾄ			
17	PSPŌ-0039QSZZ	AM	EG	Ej2 roller sponge	Ej2 ﾛｰﾗｰｽﾎﾟﾝｼﾞ			
18	NSFTB0240QSZZ	AR	EQ	EJ2 roller shaft	EJ2 ﾛｰﾗｰｼｬﾌﾄ			
19	NRŌLP0276QSZZ	AR	EQ	EJ2 roller	EJ2 ﾛｰﾗｰ			
20	MSPRT0721QSZZ	AQ	EQ	EJ2 roller spring	EJ2 ﾛｰﾗｰｽﾌﾟﾘﾝｸﾞ			
21	XPSSP20-10000	AA	DD	Spring pin(2×10)	ｽﾌﾟﾘﾝｸﾞﾋﾟﾝ			
	♻ LPiNS0036QSZZ	AW	FG	Pin	ﾋﾟﾝ	3	DCJ-1000 DCE-1099	18/Feb
22	LHLDZ0325QSZZ	AR	EQ	EJ2 roller plate holder	EJ2 ﾛｰﾗｰﾌﾟﾚｰﾄﾎﾙﾀﾞｰ			
23	NSFTZ0243QSZZ	AX	FQ	EJ2 control shaft	EJ2 ｺﾝﾄﾛｰﾙｼｬﾌﾄ			
24	MSPRD0719QSZZ	AQ	EQ	EJ1 roller spring	EJ1 ﾛｰﾗｰｽﾌﾟﾘﾝｸﾞ			
25	NRŌLP0275QSZZ	AR	EQ	PF2 L roller	PF2 L ﾛｰﾗｰ			
26	NRŌLP0274QSZZ	AR	EQ	PF2 C roller	PF2 C ﾛｰﾗｰ			
27	NSFTB0238QSZZ	AT	EZ	PF1 roller shaft	PF1 ﾛｰﾗｰｼｬﾌﾄ			
28	LPLTM0989QSZZ	AX	FQ	PF2 roller plate	PF2 ﾛｰﾗｰﾌﾟﾚｰﾄ			
29	MSPRC0715QSZZ	AQ	EQ	PF2 Roller spring	PF2 ﾛｰﾗｰｽﾌﾟﾘﾝｸﾞ			
30	N PSPŌ-0040QSZ1	AW	FG	Sponge	ｽﾎﾟﾝｼﾞ	-	Improve performance	18/Jul
	(Unit)							
901	DUNT-1395QSZZ	BT	NE	Base tray unit	ﾍﾞｰｽﾄﾚｲﾕﾆｯﾄ			

【017】

RSPF ﾍﾞｰｽﾄﾚｲ (RSPF base tray)[MX-B355W,MX-B355WZ,MX-B450W,MX-B350W,AR-B350W, MX-B450FZ,AR-B451F,MX-B350FZ,AR-B351FT,MX-B450Z,AR-B451T,MX-B350Z,AR-B351T]

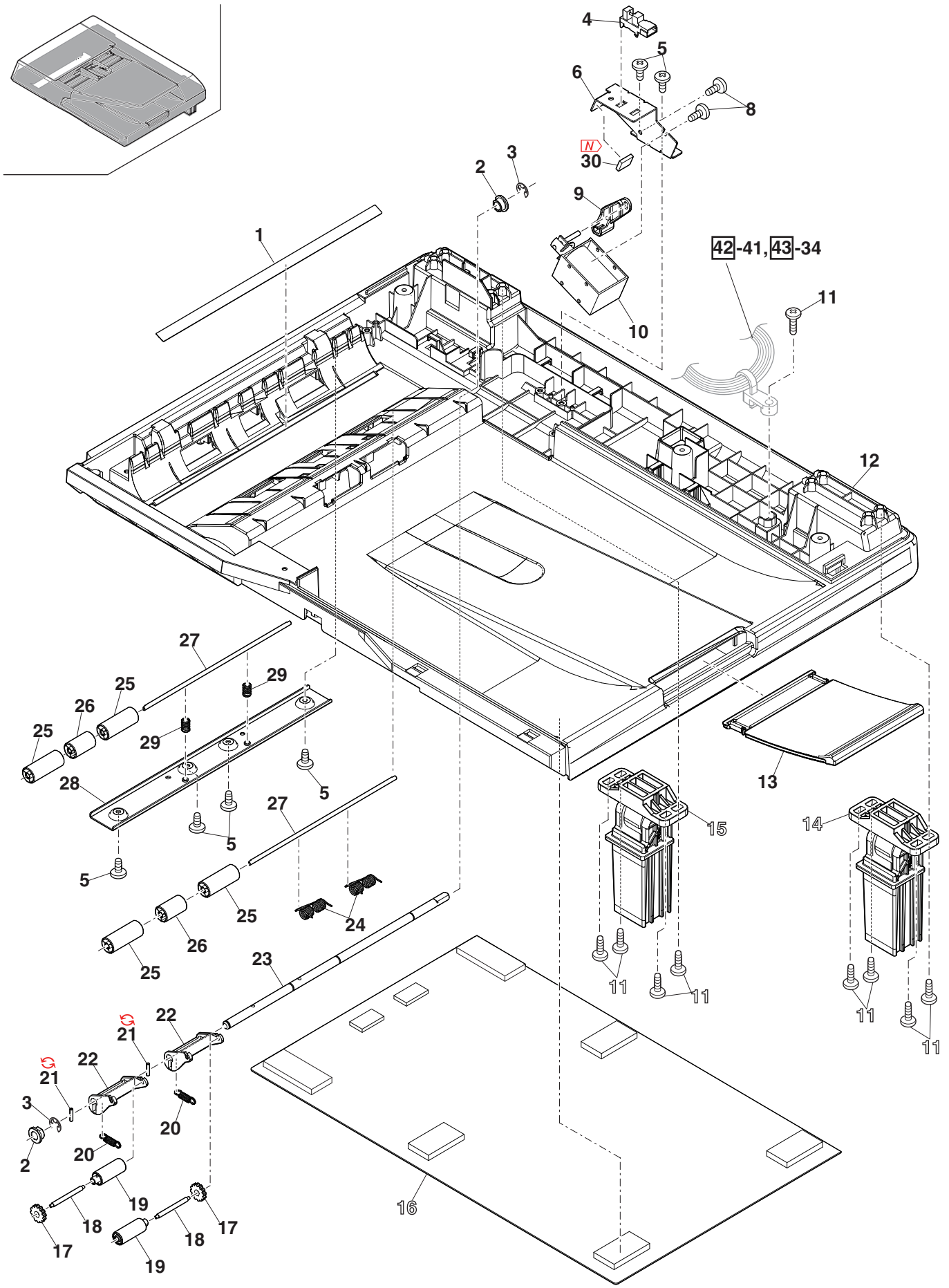

Update : 2018/Nov/9

【018】
ｽｷｬﾅｰﾕﾆｯﾄ (Scanner unit)[MX-B455W,MX-B455WZ]

NO.	PARTS CODE	PRICE RANK Ex.	PRICE RANK Ja.	DESCRIPTION		Inter-change	Reason for change	Effective time
1	DUNT-1400QSZZ	BM	HV	Document glass unit	原稿ｶﾞﾗｽﾕﾆｯﾄ			
2	LFiX-0044QSZZ	AX	FQ	Scan right cover	ｽｷｬﾝ右ｶﾊﾞｰ			
3	PSHEZ1055QSZZ	AQ	EQ	Low adhesion sheet	低粘着ｼｰﾄ			
4	XHBS730P06000	AC	DD	Screw(3×6)	ﾋﾞｽ			
5 ♣	CPWBX0328QS53	CC	UB	Scan control PWB	Scan ｺﾝﾄﾛｰﾙ基板			
	CPWBX0328QS57	CC	UB	Scan control PWB	Scan ｺﾝﾄﾛｰﾙ基板			
	CPWBX0328QS59	CB	TZ	Scan control PWB	Scan ｺﾝﾄﾛｰﾙ基板			
6	XEBS730P10000	AC	DD	Screw(3×10)	ﾋﾞｽ			
7	LPLTM1022QSZZ	AZ	FX	Scan control PWB fixing plate	Scan ｺﾝﾄﾛｰﾙ基板取付板			
8	NSFTP0254QSZZ	BH	HC	Scanner shaft	ｽｷｬﾅｰｼｬﾌﾄ			
9	XRESP40-06000	AA	DD	E ring(E4)	Eﾘﾝｸﾞ			
10	NPLYZ0077QSZZ	AQ	EQ	Idle pulley	ｱｲﾄﾞﾙﾌﾟｰﾘｰ			
11	NBLTH0072QSZZ	AX	FQ	Driving timingbelt(FHT1_0-917T)	駆動ﾀｲﾐﾝｸﾞﾍﾞﾙﾄ			
12	LX-WZ0314FHZ1	AQ	EQ	Washer(T0.25)	ﾎﾟﾘｽﾗｲﾀﾞｰ			
13	CGERH0539QS01	AS	EZ	Gear(59T)	ｷﾞｱ			
14	CPLTM1019QS01	AX	FQ	Motor plate	ﾓｰﾀｰﾌﾟﾚｰﾄ			
15	RMŌTS0107QSPZ	BD	GT	Motor	ﾓｰﾀｰ			
16	LFiX-0042QSZZ	AQ	EQ	Shaft clip right	軸ｸﾘｯﾌﾟ右			
17	MSPRC0746QSZZ	AQ	EQ	Pulley spring	ﾌﾟｰﾘｰｽﾌﾟﾘﾝｸﾞ			
18	LX-BZ1123FCPZ	AB	DD	Link fixing screw	ﾘﾝｸ取付ﾋﾞｽ			
19	CPLTM1021QS01	AX	FQ	Pulley bracket	ﾌﾟｰﾘｰﾌﾞﾗｹｯﾄ			
20	LPLTM1017QSZZ	AQ	EQ	GND plate	GNDﾌﾟﾚｰﾄ			
21	PTPE-0108QSZZ	AQ	EQ	Scanner frame tape	ｽｷｬﾅｰﾌﾚｰﾑﾃｰﾌﾟ			
22	LDAiZ0081QSZZ	BR	MJ	Scanner frame	ｽｷｬﾅｰﾌﾚｰﾑ			
23	XEBS740P10000	AA	DD	Screw(4×10)	ﾋﾞｽ			
24	XHBS730P08000	AB	DD	Screw(3×8)	ﾋﾞｽ			
25	LRALM0031QSZZ	AX	FQ	CCD rail	CCDﾚｰﾙ			
26	LPLTM1016QSZZ	AX	FQ	Scanner frame plate	ｽｷｬﾅｰﾌﾚｰﾑ板			
28	MSPRP0750QSZZ	AR	EQ	Plate shaft clip	ﾌﾟﾚｰﾄｼｬﾌﾄ ｸﾘｯﾌﾟ			
29	VHPSG2A241+-1	AG	DX	Photo sensor(SG2A241)	ﾌｫﾄｾﾝｻｰ			
30	CPWBN0329QS52	BD	GN	LED driver PWB	LEDﾄﾞﾗｲﾊﾞｰ基板			
31	LFiX-0043QSZZ	AS	EZ	FFC harness suppress	FFCﾊｰﾈｽ押え			
32	LPLTM1023QSZZ	AR	EQ	Heatsink	ﾋｰﾄｼﾝｸ			
33	PSHEZ1035QSZZ	AQ	EQ	Heat dissipation sheet	放熱ｼｰﾄ			
34	CPWBL0295QS52	AS	EZ	LED PWB	LED 基板			
35	CCŌV-0157QS51	BM	HV	Scanner cover unit	ｽｷｬﾅｰｶﾊﾞｰﾕﾆｯﾄ			
36	VHiBR24T32W-1	AG	DS	EEPROM(BR24T32-W)	EEPROM			
37	LPFTF0011QSZZ	AU	FG	Gear flange	ｷﾞｱﾌﾗﾝｼﾞ			
38	MSPRP0749QSZZ	AR	EQ	Ground clip	ｱｰｽｸﾘｯﾌﾟ			
501	DUNT-1421QSZZ	CA	TV	CCD unit	CCDﾕﾆｯﾄ			
	(Unit)							
901 ♣	DUNT-1420QS11	CP	VF	Scanner unit	ｽｷｬﾅｰﾕﾆｯﾄ			
	DUNT-1420QS12	CP	VF	Scanner unit	ｽｷｬﾅｰﾕﾆｯﾄ			
	DUNT-1420QSZZ	CP	VF	Scanner unit	ｽｷｬﾅｰﾕﾆｯﾄ			

【018】
ｽｷｬﾅｰﾕﾆｯﾄ (Scanner unit)[MX-B455W,MX-B455WZ]

Matrix

No.5	Scan ｺﾝﾄﾛｰﾙ基板 (Scan control PWB)		
PARTS CODE	Americas	Europe Australia Hong Kong Class B	Japan
ＣＰＷＢＸ０３２８ＱＳ５３	1st Lot		
ＣＰＷＢＸ０３２８ＱＳ５７		1st Lot	
ＣＰＷＢＸ０３２８ＱＳ５９			1st Lot

No.901	ｽｷｬﾅｰﾕﾆｯﾄ (Scanner unit)		
PARTS CODE	Americas	Europe Australia Hong Kong Class B	Japan
ＤＵＮＴ－１４２０ＱＳ１１		1st Lot	
ＤＵＮＴ－１４２０ＱＳ１２			1st Lot
ＤＵＮＴ－１４２０ＱＳＺＺ	1st Lot		

【018】

ｽｷｬﾅｰﾕﾆｯﾄ (Scanner unit)[MX-B455W,MX-B455WZ]

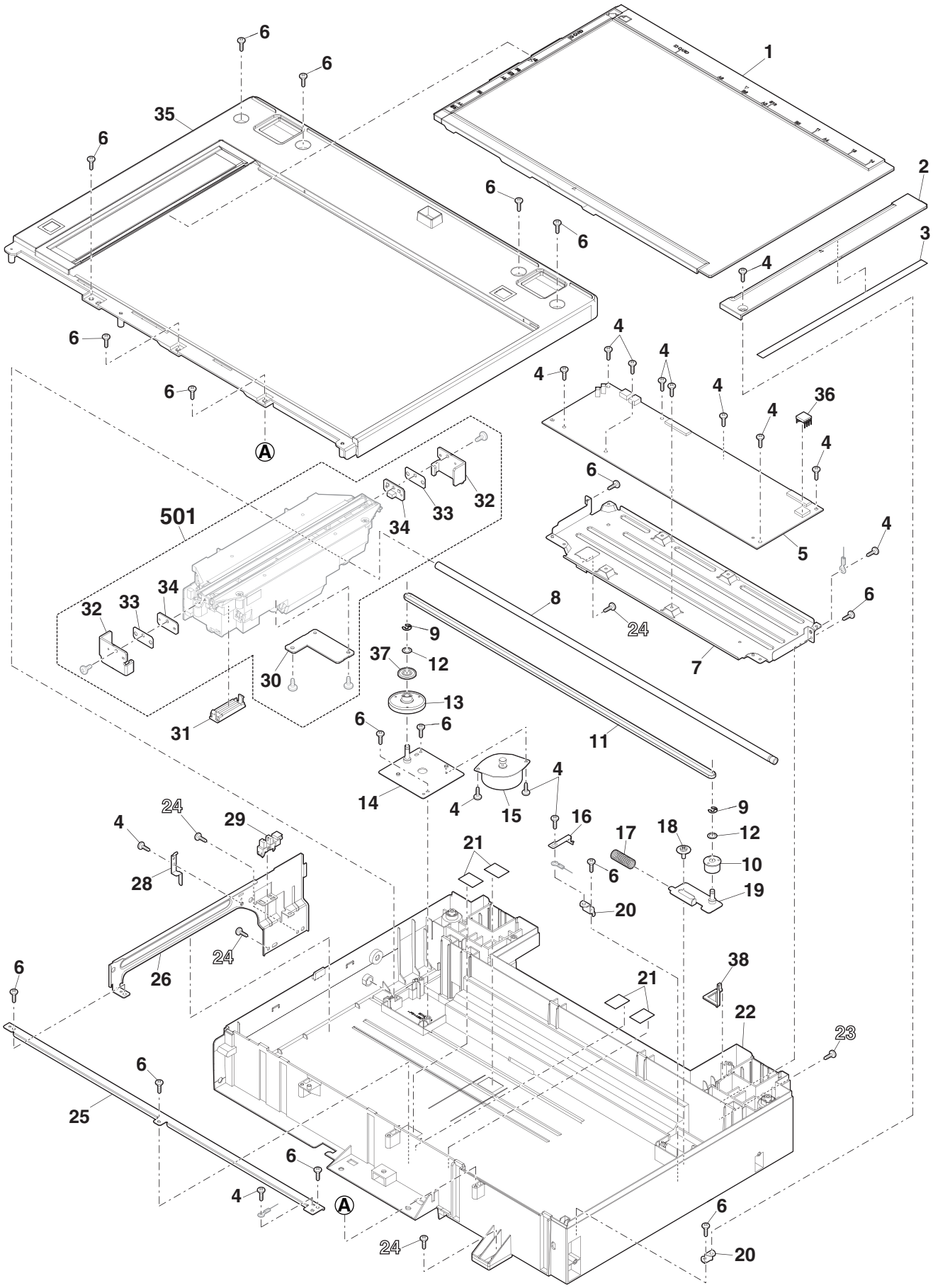

Update : 2018/Nov/9

【019】
ｽｷｬﾅｰﾕﾆｯﾄ (Scanner unit)[MX-B355WMX-B355WZ]

NO.	PARTS CODE	PRICE RANK Ex.	PRICE RANK Ja.	DESCRIPTION		Inter-change	Reason for change	Effective time
1	DUNT-1400QSZZ	BM	HV	Document glass unit	原稿ｶﾞﾗｽﾕﾆｯﾄ			
2	LFiX-0044QSZZ	AX	FQ	Scan right cover	ｽｷｬﾝ右ｶﾊﾞｰ			
3	PSHEZ1055QSZZ	AQ	EQ	Low adhesion sheet	低粘着ｼｰﾄ			
4	XHBS730P06000	AC	DD	Screw(3×6)	ﾋﾞｽ			
5	CPWBX0328QS51	CA	TX	Scan control PWB	Scan ｺﾝﾄﾛｰﾙ基板			
♣	CPWBX0328QS55	CF	UK	Scan control PWB	Scan ｺﾝﾄﾛｰﾙ基板			
6	XEBS730P10000	AC	DD	Screw(3×10)	ﾋﾞｽ			
7	LPLTM1022QSZZ	AZ	FX	Scan control PWB fixing plate	Scan ｺﾝﾄﾛｰﾙ基板取付板			
8	NSFTP0254QSZZ	BH	HC	Scanner shaft	ｽｷｬﾅｰｼｬﾌﾄ			
9	XRESP30-06000	AA	DD	E ring(E3)	E ﾘﾝｸﾞ			
10	NPLYZ0076QSZZ	AQ	EQ	Idle pulley	ｱｲﾄﾞﾙﾌﾟｰﾘｰ			
11	NBLTH0071QSZZ	AX	FQ	Driving timingbelt(FHT1_0-883T)	駆動ﾀｲﾐﾝｸﾞﾍﾞﾙﾄ			
12	PCLR-0037QSZZ	AR	EQ	Driving collar	駆動ｶﾗｰ			
13	NPLYZ0075QSZZ	AQ	EQ	Gear(60T6-25P)	ｷﾞｱ			
14	CPLTM1018QS01	AX	FQ	Motor plate	ﾓｰﾀｰﾌﾟﾚｰﾄ			
15	RMŌTS0108QSPZ	BC	GN	Motor	ﾓｰﾀｰ			
16	LFiX-0042QSZZ	AQ	EQ	Shaft clip right	軸ｸﾘｯﾌﾟ右			
17	MSPRC0746QSZZ	AQ	EQ	Pulley spring	ﾌﾟｰﾘｰｽﾌﾟﾘﾝｸﾞ			
18	LX-BZ1123FCPZ	AB	DD	Link fixing screw	ﾘﾝｸ取付ﾋﾞｽ			
19	CPLTM1020QS01	AX	FQ	Pulley bracket	ﾌﾟｰﾘｰﾌﾞﾗｹｯﾄ			
20	LPLTM1017QSZZ	AQ	EQ	GND plate	GND ﾌﾟﾚｰﾄ			
21	PTPE-0108QSZZ	AQ	EQ	Scanner frame tape	ｽｷｬﾅｰﾌﾚｰﾑﾃｰﾌﾟ			
22	LDAiZ0080QSZZ	BR	MJ	Scanner frame	ｽｷｬﾅｰﾌﾚｰﾑ			
23	XEBS740P10000	AA	DD	Screw(4×10)	ﾋﾞｽ			
24	XHBS730P08000	AB	DD	Screw(3×8)	ﾋﾞｽ			
25	LRALM0031QSZZ	AX	FQ	CCD rail	CCD ﾚｰﾙ			
26	LPLTM1016QSZZ	AX	FQ	Scanner frame plate	ｽｷｬﾅｰﾌﾚｰﾑ板			
28	MSPRP0750QSZZ	AR	EQ	Plate shaft clip	ﾌﾟﾚｰﾄｼｬﾌﾄ ｸﾘｯﾌﾟ			
29	VHPSG2A241+-1	AG	DX	Photo sensor(SG2A241)	ﾌｫﾄｾﾝｻｰ			
30	CPWBN0329QS51	BB	HC	LED driver PWB	LED ﾄﾞﾗｲﾊﾞｰ基板			
31	LFiX-0686FCZZ	AD	DJ	FFC harness fixture	FFC ﾊｰﾈｽ押え			
32	LPLTM1023QSZZ	AR	EQ	Heatsink	ﾋｰﾄｼﾝｸ			
33	PSHEZ1035QSZZ	AQ	EQ	Heat dissipation sheet	放熱ｼｰﾄ			
34	CPWBL0295QS52	AS	EZ	LED PWB	LED 基板			
35	CCŌV-0156QS51	BM	HV	Scanner cover unit	ｽｷｬﾅｰｶﾊﾞｰﾕﾆｯﾄ			
36	VHiBR24T32W-1	AG	DS	EEPROM(BR24T32-W)	EEPROM			
501	DUNT-1399QSZZ	BZ	TR	CCD unit	CCD ﾕﾆｯﾄ			
	(Unit)							
901	DUNT-1397QS11	CM	UZ	Scanner unit	ｽｷｬﾅｰﾕﾆｯﾄ			
♣	DUNT-1397QSZZ	CM	UZ	Scanner unit	ｽｷｬﾅｰﾕﾆｯﾄ			

【019】
ｽｷｬﾅｰﾕﾆｯﾄ (Scanner unit)[MX-B355WMX-B355WZ]

Matrix

No.5	Scan ｺﾝﾄﾛｰﾙ基板 (Scan control PWB)	
PARTS CODE	Americas	Europe Australia Hong Kong Class B
ＣＰＷＢＸ０３２８ＱＳ５１	1st Lot	
ＣＰＷＢＸ０３２８ＱＳ５５		1st Lot

No.901	ｽｷｬﾅｰﾕﾆｯﾄ (Scanner unit)	
PARTS CODE	Americas	Europe Australia Hong Kong Class B
ＤＵＮＴ－１３９７ＱＳ１１		1st Lot
ＤＵＮＴ－１３９７ＱＳＺＺ	1st Lot	

【019】
ｽｷｬﾅｰﾕﾆｯﾄ (Scanner unit)[MX-B355WMX-B355WZ]

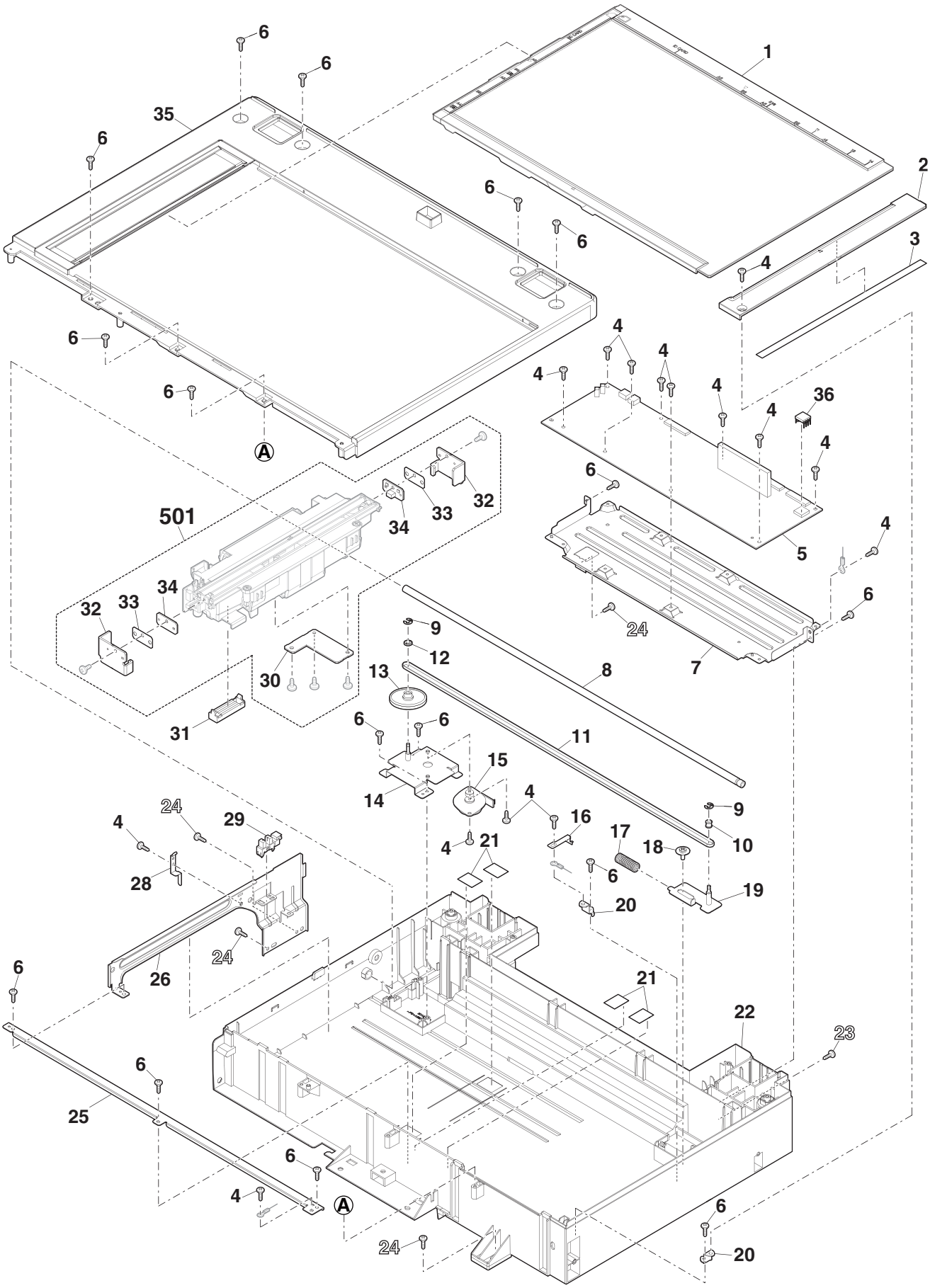

Update : 2018/Nov/9

【020】

ｽｷｬﾅｰﾕﾆｯﾄ (Scanner unit)[MFP Model]

NO.	PARTS CODE	PRICE RANK Ex.	PRICE RANK Ja.	DESCRIPTION		Inter-change	Reason for change	Effective time
1	DUNT-1400QS11	BS	MW	Document glass unit	原稿ｶﾞﾗｽﾕﾆｯﾄ			
2	LFiX-0044QSZ1	AY	FQ	Scan right cover	ｽｷｬﾝ右ｶﾊﾞｰ			
3	PSHEZ1055QSZZ	AQ	EQ	Low adhesion sheet	低粘着ｼｰﾄ			
4	XEBS730P10000	AC	DD	Screw(3×10)	ﾋﾞｽ			
5	MSLiP0006QSZZ	AX	FQ	CIS Slider	CIS ｽﾗｲﾀﾞｰ			
6	DUNT-1429QSPZ	BS	MW	CIS unit	CIS ﾕﾆｯﾄ			
7	MSPRC0762QSZZ	AU	FG	CIS spring	CIS ｽﾌﾟﾘﾝｸﾞ			
8	LDAiZ0086QSZZ	AY	FQ	CIS base	CIS ﾍﾞｰｽ			
9	XRESP30-06000	AA	DD	E ring(E3)	E ﾘﾝｸﾞ			
10	NPLYZ0076QSZZ	AQ	EQ	Idle pulley	ｱｲﾄﾞﾙﾌﾟｰﾘｰ			
11	NBLTH0071QSZZ	AX	FQ	Driving timingbelt(FHT1_0-883T)	駆動ﾀｲﾐﾝｸﾞﾍﾞﾙﾄ			
12	CPLTM1039QS01	AY	FQ	Pulley fixing plate	ﾌﾟｰﾘｰ取付板			
13	LX-BZ1123FCPZ	AB	DD	Link fixing screw	ﾘﾝｸ取付ﾋﾞｽ			
14	MSPRC0761QSZZ	AU	FG	Tension spring	ﾃﾝｼｮﾝｽﾌﾟﾘﾝｸﾞ			
15	CPWBX0354QS51	BT	NE	MFP AFE PWB	MFP AFE 基板			
16	XEBS740P10000	AA	DD	Screw(4×10)	ﾋﾞｽ			
17	LDAiZ0085QSZZ	BT	NE	Scanner frame	ｽｷｬﾅｰﾌﾚｰﾑ			
18	XHBS730P08000	AB	DD	Screw(3×8)	ﾋﾞｽ			
19	VHPSG2A241+-1	AG	DX	Photo sensor(SG2A241)	ﾌｫﾄｾﾝｻｰ			
20	LPLTM1037QSZZ	AZ	FX	Scanner frame plate	ｽｷｬﾅｰﾌﾚｰﾑ板			
21	CPLTM1038QS01	BK	HG	Motor fixing plate	ﾓｰﾀｰ取付板			
22	NPLYZ0075QSZZ	AQ	EQ	Gear(60T6-25P)	ｷﾞｱ			
23	PCLR-0037QSZZ	AR	EQ	Driving collar	駆動ｶﾗｰ			
24	RMŌTS0108QSPZ	BC	GN	Motor	ﾓｰﾀｰ			
25	CCŌV-0156QS52	BR	MJ	Scanner cover unit	ｽｷｬﾅｰｶﾊﾞｰﾕﾆｯﾄ			
26	RCŌRF0034QSZZ	AF	DS	Core(GSSC-40-12)	ｺｱ			
27	N XEBS730P08000	AC	DD	Screw(3×8)	ﾋﾞｽ	-	Specification change	18/Jul RC
	(Unit)							
901	DUNT-1397QS12	CC	UB	Scanner unit	ｽｷｬﾅｰﾕﾆｯﾄ			

【020】
ｽｷｬﾅｰﾕﾆｯﾄ (Scanner unit)[MFP Model]

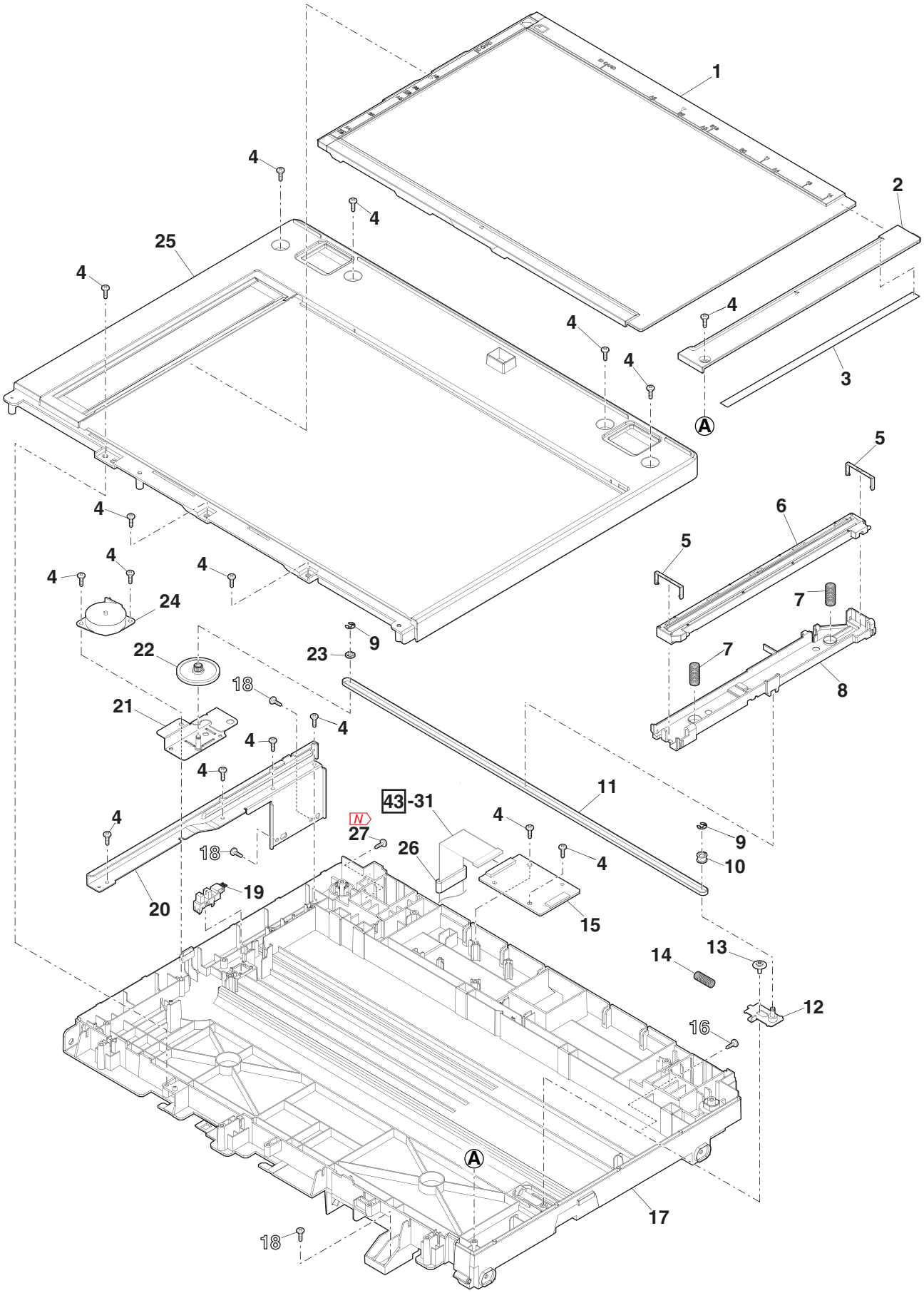

Update : 2018/Nov/9

【021】
給紙ﾄﾚｲ (Paper feed tray)

NO.	PARTS CODE	PRICE RANK Ex.	PRICE RANK Ja.	DESCRIPTION		Inter-change	Reason for change	Effective time
1	LPiNS0157FCZ1	AB	DD	Pin(φ3-14)	平行ﾋﾟﾝ			
2	NCPL-0038QSZZ	AR	EQ	PF coupling	PF ｶｯﾌﾟﾘﾝｸﾞ			
3	MSPRC0726QSZZ	AQ	EQ	PF coupling spring	PF ｶｯﾌﾟﾘﾝｸﾞｽﾌﾟﾘﾝｸﾞ			
4	XRESP40-06000	AA	DD	E ring(E4)	E ﾘﾝｸﾞ			
5	NSFTZ0244QSZZ	AX	FQ	PF shaft	PF ｼｬﾌﾄ			
6	NBRGM0968FCZZ	AC	DD	Bearing(φ6)	軸受			
7	XEBS730P08000	AC	DD	Screw(3×8)	ﾋﾞｽ			
8	LPLTM0993QSZZ	AX	FQ	PF upper PG reinforcing plate	PF 上 PG 補強板			
9	PGiDM0319QSZZ	AY	FQ	PF upper paper guide	PF 上ﾍﾟｰﾊﾟｰｶﾞｲﾄﾞ			
10	PCLR-0574FCZ1	AC	DJ	MF cam collar	MF ｶﾑ用ｺﾛ			
11	LPiNS0133FCZZ	AA	DD	Pin(φ2-10)	平行ﾋﾟﾝ			
12	LPLTP0996QSZZ	AY	FQ	Regulation plate R	規制板 R			
13	MSPRC0723QSZZ	AQ	EQ	Rotation plate B spring	回転板 B ｽﾌﾟﾘﾝｸﾞ			
14	NGERH0371QSZZ	AC	DD	MF regulation plate gear	MF 規制板ｷﾞｱ			
15	MSPRC0722QSZZ	AQ	EQ	Rotation plate S spring	回転板 S ｽﾌﾟﾘﾝｸﾞ			
16	LPLTP0999QSZZ	AX	FQ	Size detection plate	ｻｲｽﾞ検知板			
17	MSPRC0724QSZZ	AQ	EQ	Cassette earth spring	ｶｾｯﾄｱｰｽｽﾌﾟﾘﾝｸﾞ			
18	MSPRC0730QSZZ	AR	EQ	Rotation plate earth spring	回転板ｱｰｽｽﾌﾟﾘﾝｸﾞ			
19	PSHEZ5387FCZ1	AD	DJ	Multi separate front sheet R	ﾏﾙﾁ分離前ｼｰﾄ R			
20	GCASP0016QSZZ	BH	HC	500 cassette	500 ｶｾｯﾄ			
21	XPSSJ20-08000	AA	DD	Spring pin(φ2-8)	ｽﾌﾟﾘﾝｸﾞﾋﾟﾝ			
22	LHLDZ0327QSZZ	AS	EZ	Separate roller rotation fulcrum holder	分離回転支点ﾎﾙﾀﾞｰ			
23	NSFTZ0241QSZZ	AX	FQ	Separate roller shaft	分離ﾛｰﾗｰ軸			
24	MSPRC0725QSZZ	AQ	EQ	Separate pressure spring	分離圧接ｽﾌﾟﾘﾝｸﾞ			
25	LHLDZ0328QSZZ	AX	FQ	Separate fixing holder	分離取付ﾎﾙﾀﾞｰ			
26	MSPRC1145FHZZ	AQ	EQ	Stopper spring	ｽﾄｯﾊﾟｰｽﾌﾟﾘﾝｸﾞ			
27	LPLTP0650QSZZ	AD	DD	Rotation plate lock	回転板ﾛｯｸ			
28	PCLC-0316FCP1	AP	EQ	Separate torque limiter	分離ﾄﾙｸﾘﾐｯﾀｰ			
29	NRŌLR2162FCZZ	AL	EB	MF separate roller	MF 分離ﾛｰﾗｰ			
	♻ NRŌLR2162FCZ1	AX	FQ	MF separate roller	MF 分離ﾛｰﾗｰ	3	Improve performance	18/May
30	XEBS740P08000	AA	DD	Screw(4×8) [IT Model]	ﾋﾞｽ			
31	XWHS740-08120	AA	DD	Washer(φ4-12) [IT Model]	ﾜｯｼｬｰ			
32	MARMP0101QSZZ	AX	FQ	Size detection arm [IT Model]	ｻｲｽﾞ検知ｱｰﾑ			
33	TCADZ0690QSZZ	AQ	EQ	Size display card	ｻｲｽﾞ表示ｶｰﾄﾞ			
34	XEBS730P06000	AA	DD	Screw(3×6)	ﾋﾞｽ			
35	LHLDZ0326QSZZ	AR	EQ	Back end plate holder	後端板ﾎﾙﾀﾞｰ			
36	JHNDP0024QSZZ	AX	FQ	Cassette handle	ｶｾｯﾄ取手			
37	GCŌV-0155QSZZ	AZ	FX	Cassette front panel	ｶｾｯﾄ前ﾊﾟﾈﾙ			
38	XEBS740P10000	AA	DD	Screw(4×10)	ﾋﾞｽ			
39	LPLTP0998QSZZ	AQ	EQ	Back end plate base	後端板ﾍﾞｰｽ			
40	LPLTP0997QSZZ	AX	FQ	Back end plate	後端板			
41	LPLTP0995QSZZ	AY	FQ	Regulation plate F	規制板 F			
♣	♻ LPLTP0995QSZ1	AZ	FX	Regulation plate F	規制板 F	3	Improve performance	18/Jun RC
42	MSPRC0572SSZ1	AQ	EQ	Regulating plate spring	規制板ｽﾌﾟﾘﾝｸﾞ			
43	PGiDM0320QSZZ	AX	FQ	PF upper assist paper guide	PF 上補助ﾍﾟｰﾊﾟｰｶﾞｲﾄﾞ			
44	NCPL-0081FCBZ	AH	DX	One way coupling	ﾜﾝｳｪｲｶｯﾌﾟﾘﾝｸﾞ			
45	NGERH0534QSZZ	AR	EQ	One way gear(14T)	ﾜﾝｳｪｲｷﾞｱ			
46	NGERH0532QSZZ	AQ	EQ	Gear(16T)	ｷﾞｱ			
47	NGERH0533QSZZ	AQ	EQ	Gear(14T)	ｷﾞｱ			
48	NSFTZ0245QSZZ	AR	EQ	Pick up shaft	ﾋﾟｯｸｱｯﾌﾟ軸			
49	LPLTM0992QSZZ	AZ	FX	Rotation plate	回転板			
50	LPLTP0994QSZZ	AX	FQ	Rotation plate	回転板			
51	PSHEZ6066FCZZ	AC	DJ	Rotation plate sheet	回転板ｼｰﾄ			

Update : 2018/Nov/9

【021】
給紙ﾄﾚｲ (Paper feed tray)

NO.	PARTS CODE	PRICE RANK Ex.	PRICE RANK Ja.	DESCRIPTION		Inter-change	Reason for change	Effective time
52	ＸＥＢＳ７３０Ｐ１００００	AC	DD	Screw(3×10)	ﾋﾞｽ			
53	ＰＭＬＴ－０３２８ＱＳＺＺ	AN	EQ	Damper cushion	消音ﾓﾙﾄ			
	☒ ＰＭＬＴ－０３２８ＱＳＺＺ	AN	EQ	Damper cushion	消音ﾓﾙﾄ	-	Improve performance	18/May RC
54	N ＸＷＨＳ７３０－０５０８０	AA	DD	Washer(φ3-8)	ﾜｯｼｬｰ	-	Improve performance	1st Lot
	(Unit)							
901	ＣＣＡＳＰ００１６ＱＳ５２	BZ	TR	500 cassette unit	500 ｶｾｯﾄﾕﾆｯﾄ			
♣	ＣＣＡＳＰ００１６ＱＳ５１	BU	TF	500 cassette unit	500 ｶｾｯﾄﾕﾆｯﾄ			

Matrix

No.41	規制板 F(Regulation plate F)	
PARTS CODE	MX-B455W MX-B455WZ MX-B355W MX-B355WZ	MX-B450W MX-B350W AR-B350W MX-B450FZ AR-B451F MX-B350FZ AR-B351FT MX-B450Z AR-B451T MX-B350Z AR-B351T MX-B450P MX-B350P MX-B350PZ MX-B451PZ AR-B453PT MX-B351PZ AR-B353PT
ＬＰＬＴＰ０９９５ＱＳＺＺ	1st Lot	
⟲ ＬＰＬＴＰ０９９５ＱＳＺ１	18/Jun RC	1st Lot

No.901	500 ｶｾｯﾄﾕﾆｯﾄ (500 cassette unit)	
PARTS CODE	MX-B455W MX-B455WZ MX-B355W MX-B355WZ	MX-B450W MX-B350W AR-B350W MX-B450FZ AR-B451F MX-B350FZ AR-B351FT MX-B450Z AR-B451T MX-B350Z AR-B351T MX-B450P MX-B350P MX-B350PZ MX-B451PZ AR-B453PT MX-B351PZ AR-B353PT
ＣＣＡＳＰ００１６ＱＳ５１	1st Lot	
ＣＣＡＳＰ００１６ＱＳ５２		1st Lot

【021】
給紙ﾄﾚｲ (Paper feed tray)

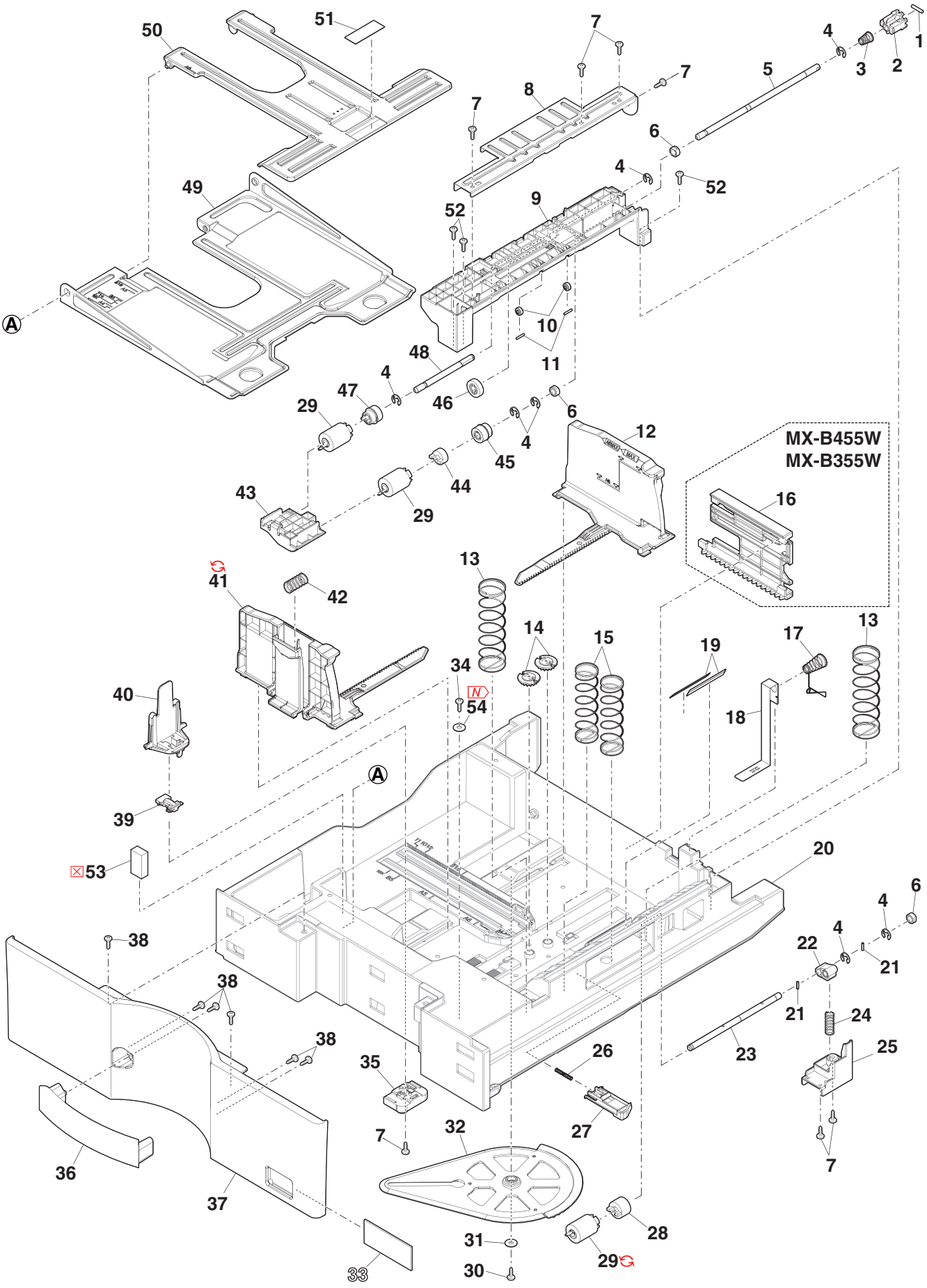

Update : 2018/Nov/9

【022】
PS ﾕﾆｯﾄ (PS unit)

NO.	PARTS CODE	PRICE RANK Ex.	PRICE RANK Ja.	DESCRIPTION		Inter-change	Reason for change	Effective time
1	NRŌLP0224QSZZ	AC	DD	PS follower roller	PS 従動外側ﾛｰﾗｰ			
2	LPiNS0327FCZZ	AC	DJ	Spring pin(φ2-10)	ｽﾌﾟﾘﾝｸﾞﾋﾟﾝ			
3	NRŌLP0223QSZZ	AD	DJ	PS follower roller	PS 従動内側ﾛｰﾗｰ			
4	NBRGC0651FCZZ	AD	DJ	Bearing	軸受			
5	LPLTM0991QSZZ	AR	EQ	PS idle bearing plate	PS ｱｲﾄﾞﾙ軸受板			
6	MSPRT4592FHZZ	AQ	EQ	Ps pressure spring	PS 圧接ｽﾌﾟﾘﾝｸﾞ			
7	NSFTZ0239QSZZ	AX	FQ	Ps idle shaft	PS ｱｲﾄﾞﾙ軸			
8	NBRGC0319FCZ1	AC	DJ	Bearing	軸受			
9	XRESP70-08000	AA	DD	E ring(E7)	E ﾘﾝｸﾞ			
10	NRŌLR0273QSZZ	BC	GJ	Ps roller	PS ﾛｰﾗｰ			
11	XEBS730P08000	AC	DD	Screw(3×8)	ﾋﾞｽ			
12	QEARP0040QSZZ	AR	EQ	PS earth plate	PS ｱｰｽ板			
13	VHPGP2A230L-1	AP	EQ	Photo sensor(GP2A230L)	ﾌｫﾄｾﾝｻｰ			
14	LX-BZ0088SSPZ	AH	DX	Screw(3×6)	ﾋﾞｽ			
15	NCPL-0040QSZZ	AQ	EQ	Ps coupling	給紙ｶｯﾌﾟﾘﾝｸﾞ			
16	MSPRC4256FHZZ	AQ	EQ	PS limit spring	PS ﾘﾐｯﾀｰｽﾌﾟﾘﾝｸﾞ			
17	LHLDZ2476FCZZ	AE	DJ	PS brake holder	PS ﾌﾞﾚｰｷﾎﾙﾀﾞｰ			
18	LDAiZ0077QSZZ	AZ	FX	PS base plate	PS 台板			
19	PSHEP1021QSZZ	AQ	EQ	PS upper guide sheet R	PS 上ｶﾞｲﾄﾞｼｰﾄ R			
20	PSHEP1020QSZZ	AQ	EQ	PS upper guide sheet F	PS 上ｶﾞｲﾄﾞｼｰﾄ F			
21	PGiDM0305QSZZ	AX	FQ	PS upper paper guide	PS 上ﾍﾟｰﾊﾟｰｶﾞｲﾄﾞ			
22	XEBS740P10000	AA	DD	Screw(4×10)	ﾋﾞｽ			
23	NGERH0529QSZZ	AQ	EQ	Ps gear	PS ｷﾞｱ			
24	JKNBZ0015QSZZ	AQ	EQ	Jam release knob	JAM 解除ﾉﾌﾞ			
25	XRESP50-06000	AA	DD	E ring(E5)	E ﾘﾝｸﾞ			
26	NGERH0530QSZZ	AQ	EQ	Ps idle gear	PS ｱｲﾄﾞﾙｷﾞｱ			
27	XRESP40-06000	AA	DD	E ring(E4)	E ﾘﾝｸﾞ			
28	PCLR-0501FCZZ	AB	DJ	Delivery guide collar	排紙ｶﾞｲﾄﾞｺﾛ			
29	XRESP60-08000	AA	DD	E type ring(E6)	E ﾘﾝｸﾞ			
	(Unit)							
901	CDAiZ0077QS51	BN	HZ	PS unit	PS ﾕﾆｯﾄ			

【022】
PS ﾕﾆｯﾄ (PS unit)

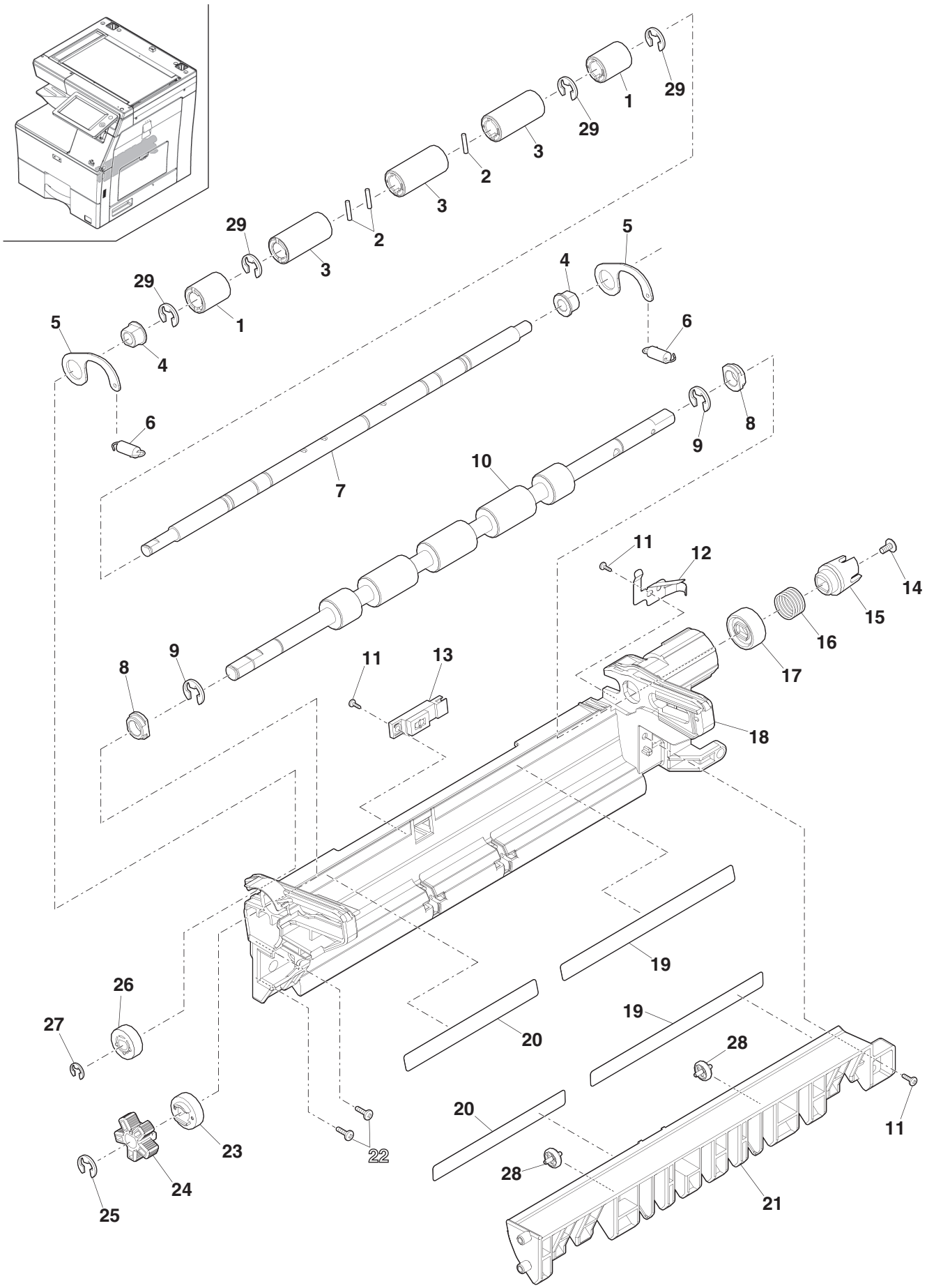

Update : 2018/Nov/9

【023】
DV ﾕﾆｯﾄ (DV unit)

NO.	PARTS CODE	PRICE RANK Ex.	PRICE RANK Ja.	DESCRIPTION		Inter-change	Reason for change	Effective time
1	PSEL-0231QSZZ	AQ	EQ	DV duct seal R	DV ﾀﾞｸﾄｼｰﾙ R			
2	XEBS730P08000	AC	DD	Screw(3×8)	ﾋﾞｽ			
3	NGERH0468QSZZ	AQ	EQ	MXR coupling gear	MXR ｶｯﾌﾟﾘﾝｸﾞｷﾞｱ			
4	PCŌVP0242QSZZ	AX	FQ	DVR cover	DVR ｶﾊﾞｰ			
5	PSEL-0244QSZZ	AP	ZZ	DV blade seal	DV ﾌﾞﾚｰﾄﾞｼｰﾙ			
6	XBBS730P06000	AC	DD	Screw(3×6)	ﾋﾞｽ			
7	PSEL-0235QSZZ	AQ	EQ	Docter cover duct seal	ﾄﾞｸﾀｰｶﾊﾞｰﾀﾞｸﾄｼｰﾙ			
8	PCŌVP0243QSZZ	AX	FQ	Doctor cover	ﾄﾞｸﾀｰｶﾊﾞｰ			
9	NBLTH0445FHZ1	AQ	EQ	Dv belt	DV ﾍﾞﾙﾄ			
10	NPLYZ0069QSZZ	AF	FQ	MXL pulley	MXL ﾌﾟｰﾘｰ			
11	XRESP30-06000	AA	DD	E ring(E3)	E ﾘﾝｸﾞ			
12	LPiNS0133FCZZ	AA	DD	Pin(φ2-10)	平行ﾋﾟﾝ			
13	NBLTT0008SSZZ	AR	EQ	Dup roller drive belt	DUP ﾛｰﾗｰ駆動ﾍﾞﾙﾄ			
14	NPLYZ0068QSZZ	AQ	EQ	MXR double pulley	MXR ﾀﾞﾌﾞﾙﾌﾟｰﾘｰ			
15	LX-NZ0111FCZZ	AA	DD	Plate nut(M3)	板ﾅｯﾄ			
16	PSEL-0234QSZZ	AQ	EQ	Doctor cover seal R	ﾄﾞｸﾀｰｶﾊﾞｰｼｰﾙ R			
17	PSEL-0250QSZZ	AQ	EQ	Doctor cover seal RC	ﾄﾞｸﾀｰｶﾊﾞｰｼｰﾙ RC			
18	PSEL-0233QSZZ	AQ	EQ	Doctor cover seal C	ﾄﾞｸﾀｰｶﾊﾞｰｼｰﾙ C			
19	XRESP50-06000	AA	DD	E ring(E5)	E ﾘﾝｸﾞ			
20	NPLYZ0067QSZZ	AF	FQ	MG pulley	MG ﾌﾟｰﾘｰ			
21	PSHEP0999QSZZ	AC	ZZ	DV side sheet R	DV ｻｲﾄﾞｼｰﾄ R			
22	PSEL-0232QSZZ	AC	EZ	Doctor cover seal F	ﾄﾞｸﾀｰｶﾊﾞｰｼｰﾙ F			
23	PSEL-0236QSZZ	AQ	EQ	DV paper guide seal	DV ﾍﾟｰﾊﾟｰｶﾞｲﾄﾞｼｰﾙ			
24	PGiDM0292QSZZ	AY	FQ	DV paper guide	DV ﾍﾟｰﾊﾟｰｶﾞｲﾄﾞ			
25	PCŌVP0245QSZZ	AX	FQ	DV under cover	DV 下ｶﾊﾞｰ			
26	PSHEP0998QSZZ	AC	ZZ	DV side sheet F	DV ｻｲﾄﾞｼｰﾄ F			
27	PCŌVP0246QSZZ	AX	FQ	DVF cover	DVF ｶﾊﾞｰ			
28	MLEVP0203QSZZ	AX	FQ	DV lever	DV ﾚﾊﾞｰ			
29	LX-BZ1143FCPZ	AD	DJ	Screw	ﾋﾞｽ			
30	PSEL-0238QSZZ	AQ	EQ	Upper cover seal FRU	上ｶﾊﾞｰｼｰﾙ FRU			
31	PSEL-0240QSZZ	AQ	EQ	Upper cover seal FRD	上ｶﾊﾞｰｼｰﾙ FRD			
32	PSEL-0241QSZZ	AQ	EQ	Upper cover seal CD	上ｶﾊﾞｰｼｰﾙ CD			
33	PCŌVP0244QSZZ	AX	FQ	DV upper cover	DV 上ｶﾊﾞｰ			
34	PSEL-0239QSZZ	AQ	EQ	Upper cover seal CU	上ｶﾊﾞｰｼｰﾙ CU			
35	CHLDZ0300QS51	AT	GN	Filter holder unit	ﾌｨﾙﾀｰﾎﾙﾀﾞｰﾕﾆｯﾄ			
36	PSEL-0243QSZZ	AQ	EQ	Supply enter cushion	補給口ﾓﾙﾄ			
37	PSEL-0242QSZZ	AQ	EQ	Upper cover seal D	上ｶﾊﾞｰｼｰﾙ D			
38	PSHT-0025QSZZ	AR	EQ	DV shutter	DV ｼｬｯﾀｰ			
39	PSEL-0252QSZZ	AQ	EQ	DV box seal FRC	DV ﾎﾞｯｸｽｼｰﾙ FRC			
40	PSHEP1053QSZZ	AQ	EQ	DV PG sheet	DV PG ｼｰﾄ			
	♻ PSHEP1071QSZZ	AQ	EQ	DV paper guide seal	DV ﾍﾟｰﾊﾟｰｶﾞｲﾄﾞｼｰﾙ	4	Improve performance	18/April
501	CCŌVP0244QS51	BC	GJ	DV upper cover unit	DV 上ｶﾊﾞｰﾕﾆｯﾄ			
502	CBŌX-0036QS51	BX	TF	DV box unit	DV ﾎﾞｯｸｽﾕﾆｯﾄ			
	♻ CBŌX-0036QS52	BX	TF	DV box unit	DV ﾎﾞｯｸｽﾕﾆｯﾄ	4	Improve performance	18/April
	(Unit)							
901	DUNT-1384QSZZ	BV	RB	DV unit	DV ﾕﾆｯﾄ			
	♻ DUNT-1384QS11	BV	RB	DV unit	DV ﾕﾆｯﾄ	4	Improve performance	18/April

Update : 2018/Nov/9

【023】
DV ﾕﾆｯﾄ (DV unit)

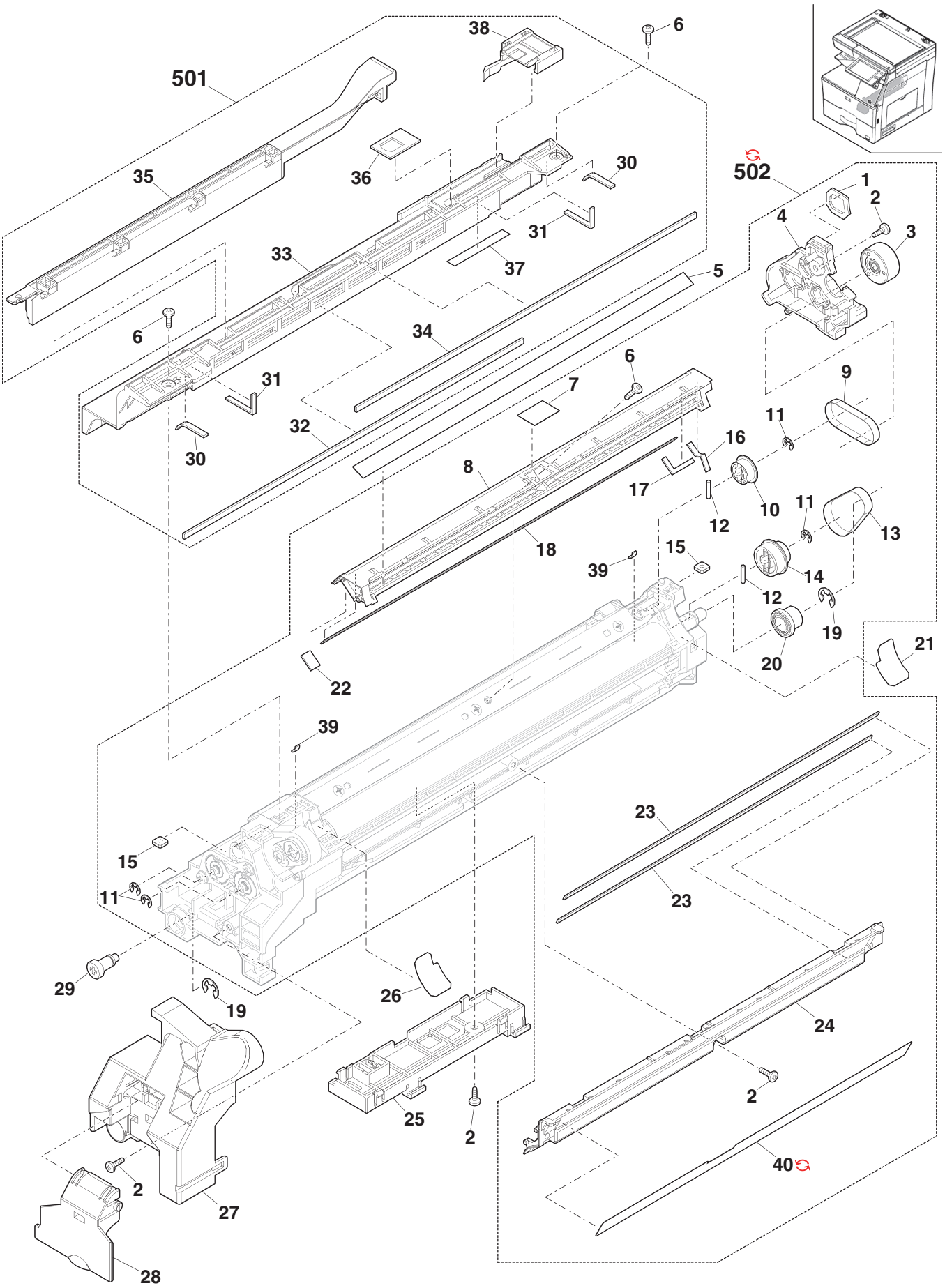

Update : 2018/Nov/9

【024】
ﾌﾟﾛｾｽ部 (Process section)

NO.	PARTS CODE	PRICE RANK Ex.	PRICE RANK Ja.	DESCRIPTION		Inter-change	Reason for change	Effective time
1	NGERH0476QSZZ	AQ	EQ	Waste toner drive gear	廃ﾄﾅｰ駆動ｷﾞｱ			
2	NBRGP0746FCZZ	AQ	EQ	Cleaner bearing	ｸﾘｰﾅｰ軸受			
4	NSRW-0012QSZZ	AX	FQ	Waste toner screw	廃ﾄﾅｰｽｸﾘｭｰ			
5	PSHEZ1049QSZZ	AQ	EQ	Waste toner stirring sheet	廃ﾄﾅｰ 撹拌ｼｰﾄ			
	♻ PSHEZ1049QSZ1	AQ	EQ	Waste toner stirring sheet	廃ﾄﾅｰ撹拌ｼｰﾄ	3	Improve performance	18/Jun RC
6	PTPE-0115QSZZ	AQ	EQ	Screw tape	ｽｸﾘｭｰﾃｰﾌﾟ			
7	PMLT-0307QSZZ	AM	EG	Waste toner screw seal	廃ﾄﾅｰｽｸﾘｭｰｼｰﾙ			
8	PLNS-0115FCZZ	AX	FQ	DCH lens F	DCH ﾚﾝｽﾞ F			
9	LHLDZ0306QSZZ	AX	FQ	Separator pawl holder	剥離爪ﾎﾙﾀﾞｰ			
10	PRNGF0106FCZ2	AC	DJ	Star ring	ｽﾀｰﾘﾝｸﾞ			
11	MSPRD0695QSZZ	AC	EZ	Separator pawl spring	剥離爪ｽﾌﾟﾘﾝｸﾞ			
12	PTME-0056QSZZ	AN	FX	Separator pawl	剥離爪			
13	NGERH0480QSZZ	AQ	EQ	Transport pipe screw gear	搬送ﾊﾟｲﾌﾟｽｸﾘｭｰｷﾞｱ			
14	NBRGP0771FCPZ	AC	DJ	Bearing MX R	ﾍﾞｱﾘﾝｸﾞ MX R			
15	XEBS730P08000	AC	DD	Screw(3×8)	ﾋﾞｽ			
16	PPiPP0022QSZZ	AX	FQ	Waste toner transport pipe	廃ﾄﾅｰ搬送ﾊﾟｲﾌﾟ			
17	NBRGP0943FCZZ	AC	DJ	Bearing(φ5-8)	軸受			
18	NGERH0477QSZZ	AQ	EQ	Transport screw gear	搬送ｽｸﾘｭｰｷﾞｱ			
19	PSHT-0028QSZZ	AR	EQ	Waste toner pipe shutter	廃ﾄﾅｰﾊﾟｲﾌﾟｼｬｯﾀｰ			
	♻ PSHT-0028QSZ1	AR	EQ	Waste toner pipe shutter	廃ﾄﾅｰﾊﾟｲﾌﾟｼｬｯﾀｰ	3	Improve performance	18/Jun
20	PMLT-0308QSZZ	AM	EG	Pipe shutter seal	ﾊﾟｲﾌﾟｼｬｯﾀｰｼｰﾙ			
21	MSPRC0687QSZZ	AQ	EQ	Waste toner pipe shutter spring	廃ﾄﾅｰﾊﾟｲﾌﾟｼｬｯﾀｰｽﾌﾟﾘﾝｸﾞ			
22	PCŌVP0257QSZ1	AX	FQ	Process F cover	ﾌﾟﾛｾｽ F ｶﾊﾞｰ			
♣	PCŌVP0257QSZZ	AX	FQ	Process F cover	ﾌﾟﾛｾｽ F ｶﾊﾞｰ			
23	NSRW-0013QSZZ	AX	FQ	Transport pipe screw	搬送ﾊﾟｲﾌﾟｽｸﾘｭｰ			
24	PCAPH0033QSZZ	AR	EQ	Waste toner pipe cap	廃ﾄﾅｰﾊﾟｲﾌﾟｷｬｯﾌﾟ			
26	NGERH0478QSZZ	AQ	EQ	Transport idle gear	搬送ｱｲﾄﾞﾙｷﾞｱ			
27	NGERH0479QSZZ	AQ	EQ	Transport pipe idle gear	搬送ﾊﾟｲﾌﾟｱｲﾄﾞﾙｷﾞｱ			
28	CCLEZ0032QS51	BD	GD	Cleaning blade	ｸﾘｰﾆﾝｸﾞﾌﾞﾚｰﾄﾞ			
29	PCŌVP0258QSZZ	AX	FQ	MCR cover	MCR ｶﾊﾞｰ			

Matrix

No.22	ﾌﾟﾛｾｽ F ｶﾊﾞｰ (Process F cover)			
PARTS CODE	MX-B455W MX-B455WZ MX-B355W MX-B355WZ MX-B450W	MX-B350W AR-B350W		MX-B450FZ AR-B451F MX-B350FZ AR-B351FT MX-B450Z AR-B451T MX-B350Z AR-B351T MX-B450P MX-B350P MX-B350PZ MX-B451PZ AR-B453PT MX-B351PZ AR-B353PT
	Americas Australia Europe Hong Kong Japan Class B	Americas Australia Europe Hong Kong Asia2	Japan	Americas Asia Australia Europe
PCŌVP0257QSZ1			1st Lot	
PCŌVP0257QSZZ	1st Lot	1st Lot		1st Lot

【024】
ﾌﾟﾛｾｽ部 (Process section)

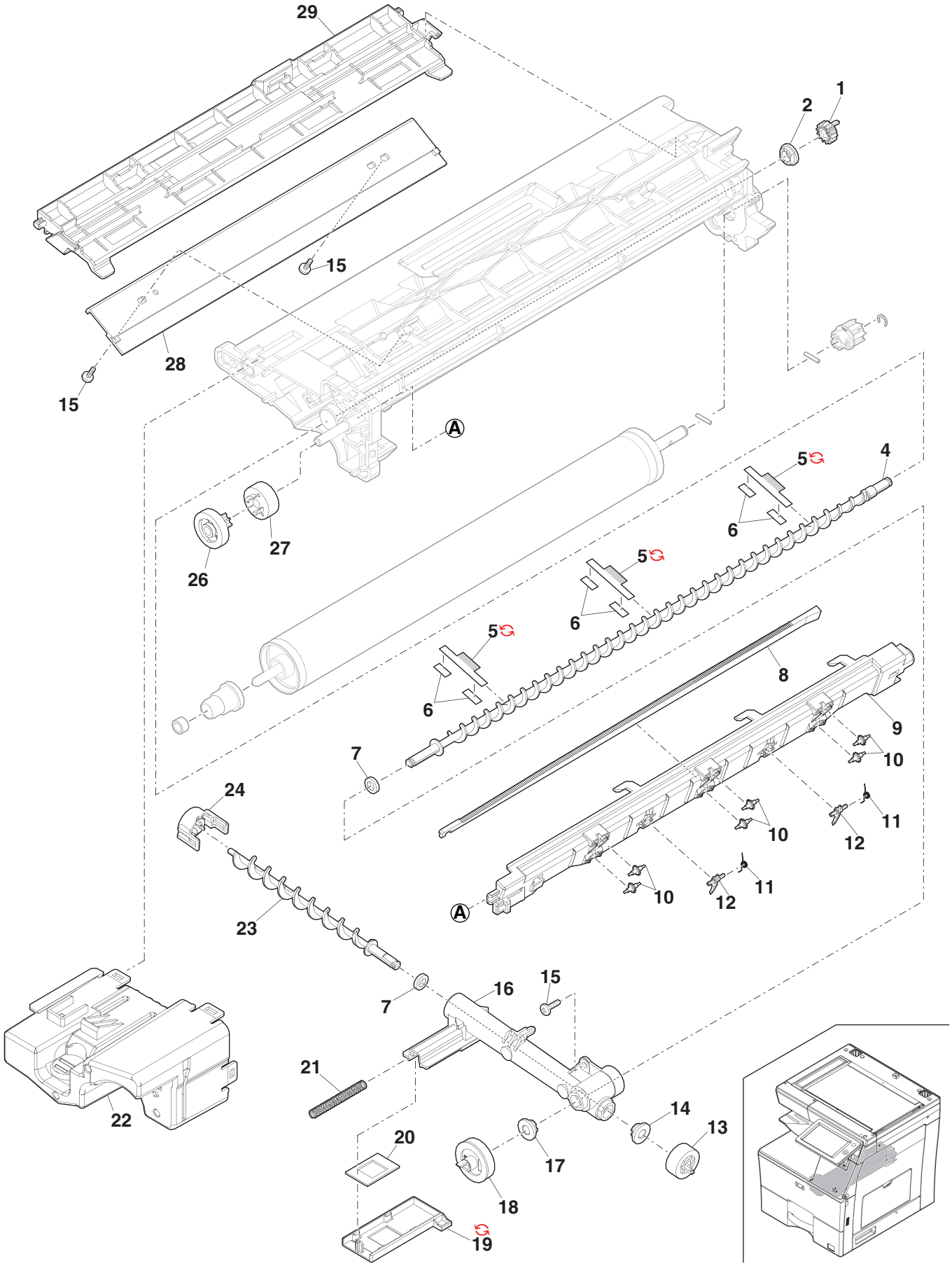

Update : 2018/Nov/9

【025】
転写ﾕﾆｯﾄ (Transfer unit)

NO.	PARTS CODE	PRICE RANK Ex.	PRICE RANK Ja.	DESCRIPTION		Inter-change	Reason for change	Effective time
1	ＬＸ－ＢＺ１０８２ＦＣＺＺ	AB	DD	Blue screw(3×8)	青ﾋﾞｽ			
2	ＰＳＨＥＺ１０５７ＱＳＺＺ	AQ	EQ	Transfer front PG sheet	転写前 PG ｼｰﾄ			
3	ＰＧｉＤＨ０２９１ＱＳＺＺ	AX	FQ	Before transfer paper guide	転写前ﾍﾟｰﾊﾟｰｶﾞｲﾄﾞ			
4	ＰＳＨＥＺ１０４１ＱＳＺＺ	AQ	EQ	Transfer front guide sheet	TC 前ｶﾞｲﾄﾞｼｰﾄ			
5	ＰＲＮＧＦ０１０７ＦＣＺ１	AC	DJ	Star ring	ｽﾀｰﾘﾝｸﾞ			
6	ＬＨＬＤＺ０３１０ＱＳＺＺ	AX	FQ	TC separate terminal holder	TC 剥離電極板ﾎﾙﾀﾞｰ			
7	ＬＰＬＴＭ０９６４ＱＳＺＺ	AW	FG	TC separate terminal	TC 剥離電極板			
8	ＬＦＲＭ－０１８０ＱＳＺＺ	AY	FQ	Transfer frame	転写ﾌﾚｰﾑ			
9	ＱＳＬＰ－００３６ＱＳＺＺ	AR	EQ	TC roller HV terminal	TC ﾛｰﾗｰ HV 端子			
10	ＱＳＬＰ－００３７ＱＳＺＺ	AR	EQ	TC separate HV terminal	TC 分離 HV 端子			
11	ＬＸ－ＮＺ０１１１ＦＣＺＺ	AA	DD	Plate nut(M3)	板ﾅｯﾄ			
12	ＮＢＲＧＰ１０７２ＦＣＺ１	AD	DD	Brush bearing	ﾌﾞﾗｼ軸受			
13	ＮＲＯＬＲ０２６６ＱＳＺＺ	BE	HZ	Transfer roller	転写ﾛｰﾗｰ			
14	ＬＳＴＰＰ００３１ＱＳＺＺ	AQ	EQ	TC roller stopper	TC ﾛｰﾗｰｽﾄｯﾊﾟｰ			
15	ＮＢＲＧＰ０８７３ＦＣＺＺ	AC	DJ	Transfer roller bearing	転写ﾛｰﾗｰ軸受			
	(Unit)							
901	ＣＦＲＭ－０１８０ＱＳ５１	BE	HL	Transfer unit	転写ﾕﾆｯﾄ			

【025】
転写ﾕﾆｯﾄ (Transfer unit)

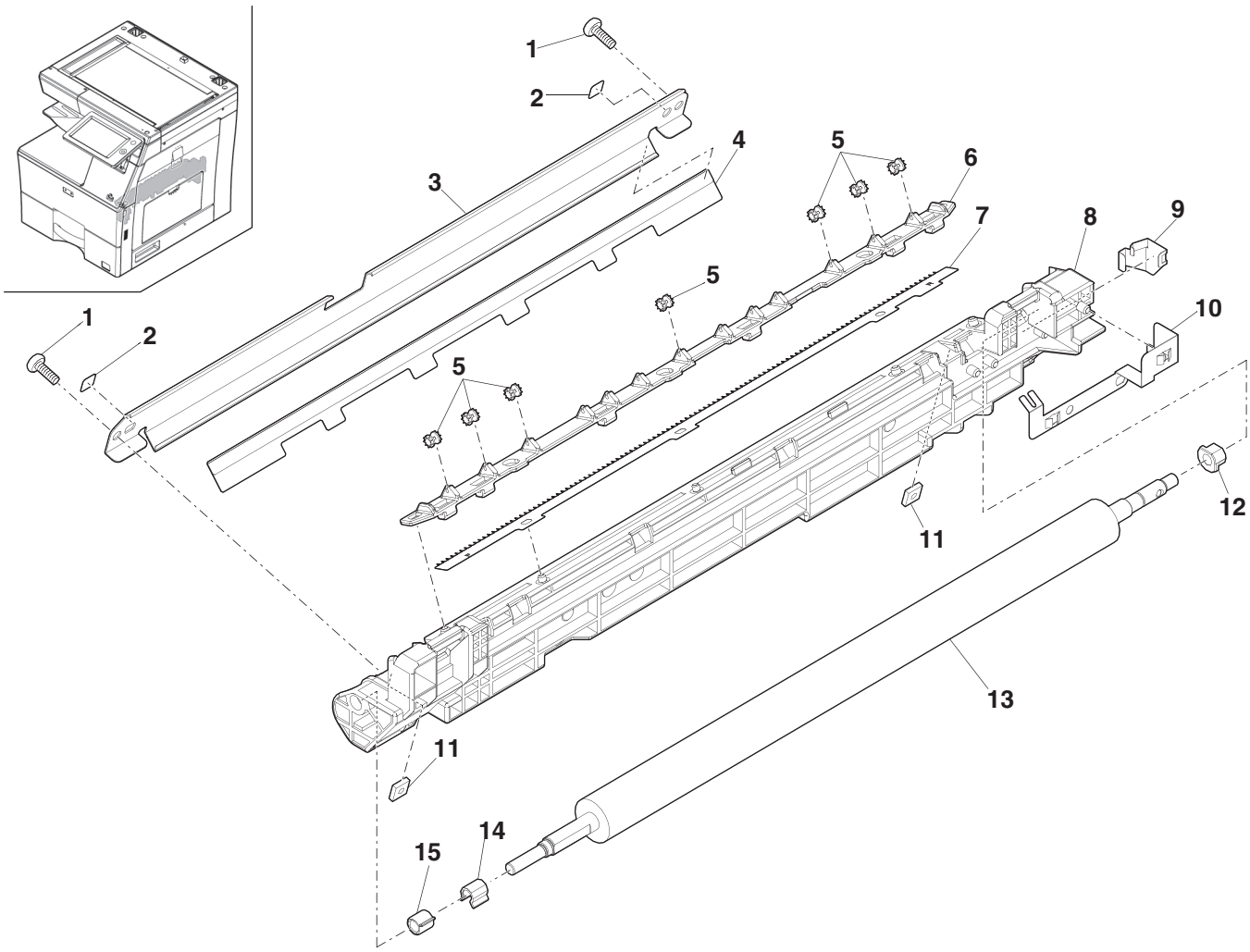

Update : 2018/Nov/9

【026】
定着ﾕﾆｯﾄ 1 (Fusing unit 1)

NO.	PARTS CODE	PRICE RANK Ex.	PRICE RANK Ja.	DESCRIPTION		Inter-change	Reason for change	Effective time
1	NBRGY0984FCZZ	AL	EB	Fusing roller bearing(φ8-16)	定着ﾛｰﾗｰﾍﾞｱﾘﾝｸﾞ			
2	NRŌLS0292QSZZ	BM	LX	Pressure roller	圧着ﾛｰﾗｰ			
3	TLABH5759FHZZ	AG	DX	Pressure release lever label	圧解除ﾚﾊﾞｰﾗﾍﾞﾙ			
4	MLEVP0210QSZZ	AR	EQ	Releasing lever R	解除ﾚﾊﾞｰ R			
5	XRESP50-06000	AA	DD	E ring(E5)	E ﾘﾝｸﾞ			
6	MLEVP0209QSZZ	AR	EQ	Releasing lever F	解除ﾚﾊﾞｰ F			
7	MSPRC0705QSZZ	AQ	EQ	Pressure spring	加圧ﾊﾞﾈ			
8	MSPRC0706QSZZ	AQ	EQ	Pressure sub spring	加圧補助ｽﾌﾟﾘﾝｸﾞ			
9	CFRM-0186QS01	AZ	FX	Fusing under frame	定着下ﾌﾚｰﾑ			
10	MLEVF0208QSZZ	AY	FQ	Pressure lever R	加圧ﾚﾊﾞｰ R			
11	LHLDZ0319QSZZ	AS	EZ	Pressure bearing holder R	加圧ﾍﾞｱﾘﾝｸﾞﾎﾙﾀﾞｰ R			
12	XRESP60-08000	AA	DD	E type ring(E6)	E ﾘﾝｸﾞ			
13	MLEVF0207QSZZ	AY	FQ	Pressure lever F	加圧ﾚﾊﾞｰ F			
14	LHLDZ0318QSZZ	AS	EZ	Pressure bearing holder F	加圧ﾍﾞｱﾘﾝｸﾞﾎﾙﾀﾞｰ F			
15	XBBS740P06000	AA	DD	Screw(4×6)	ﾋﾞｽ			
16	CPLTM0982QS01	AR	EQ	Fusing connection plate	定着接続板			
17	MSPRD0708QSZZ	AQ	EQ	Fusing rear under PG return spring	定着後下 PG 反転ｽﾌﾟﾘﾝｸﾞ			
18	LPLTM0980QSZZ	AY	FQ	Fusing under frame pg reinforcing plate	定着下ﾌﾚｰﾑ PG 補強板			
19	PBRSS0049QSZZ	AQ	EQ	Fusing under discharge brush	定着下除電ﾌﾞﾗｼ			
20	PSPAU0069QSZZ	AR	EQ	Fusing enter PG spacer	定着入口 PG ｽﾍﾟｰｻｰ			
21	LX-BZ1181FCZZ	AB	DD	Screw(3×6)	ﾋﾞｽ			
22	XBPS730P10KS0	AB	DD	Screw(3×10KS)	ﾋﾞｽ			
24	XEBS730P08000	AC	DD	Screw(3×8)	ﾋﾞｽ			
25	QEARB0384FHZZ	AQ	EQ	PG earth spring	PG ｱｰｽｽﾌﾟﾘﾝｸﾞ			
26	PGiDH0306QSZZ	AX	FQ	Fusing enter PG	定着入紙 PG			
	(Unit)							
901 ♣	DUNT-1385QS13	CE	UH	Fusing unit	定着ﾕﾆｯﾄ			
	DUNT-1385QS12	CC	TZ	Fusing unit	定着ﾕﾆｯﾄ			
	DUNT-1385QSZZ	CC	UB	Fusing unit	定着ﾕﾆｯﾄ			

Matrix

No.901	定着ﾕﾆｯﾄ (Fusing unit)		
PARTS CODE	Americas	Europe Australia Asia Class B	Japan
DUNT-1385QS12			1st Lot
DUNT-1385QS13		1st Lot	
DUNT-1385QSZZ	1st Lot		

【026】
定着ﾕﾆｯﾄ 1 (Fusing unit 1)

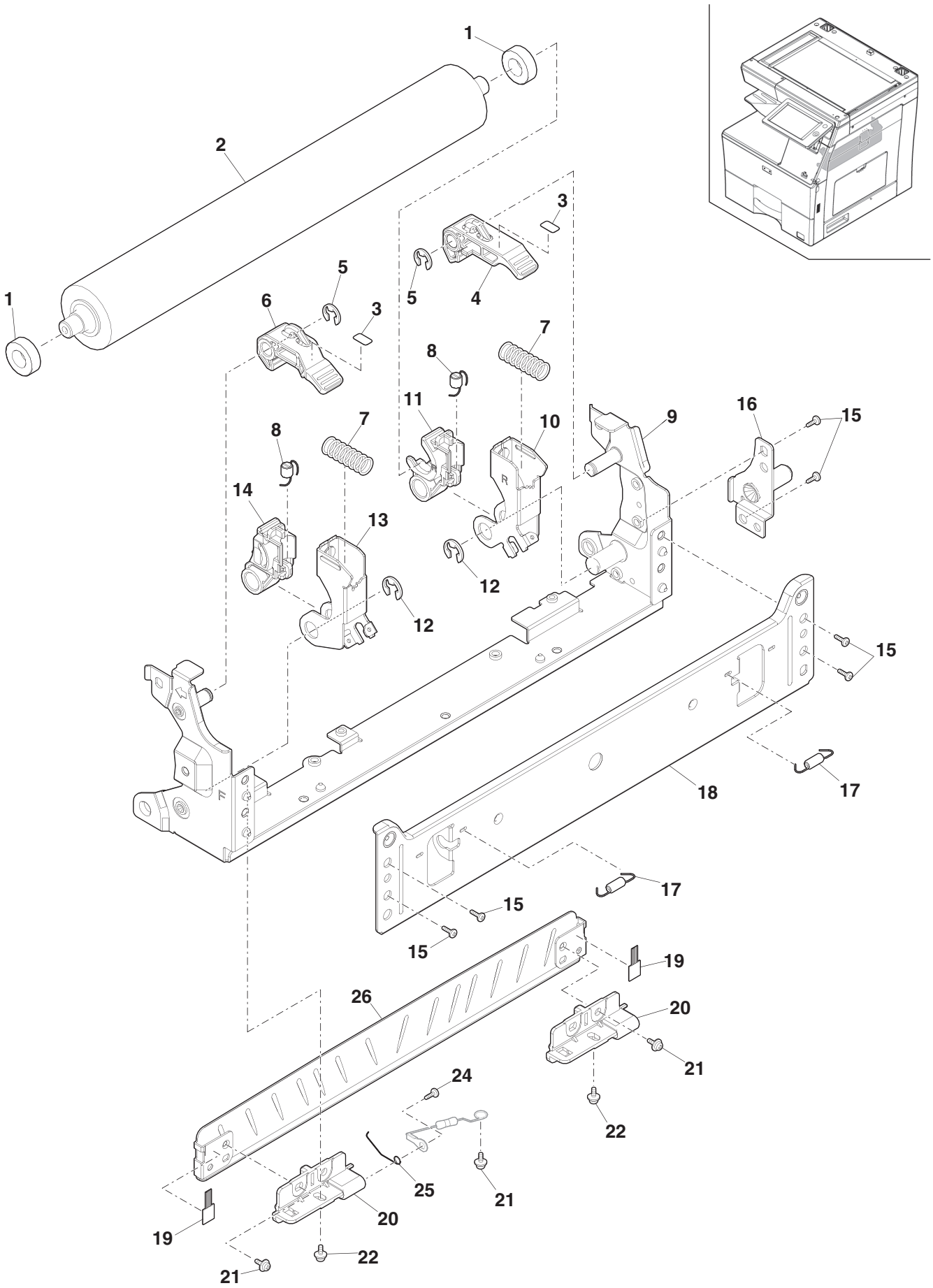

Update : 2018/Nov/9

【027】
定着ﾕﾆｯﾄ 2 (Fusing unit 2)

NO.	PARTS CODE	PRICE RANK Ex.	PRICE RANK Ja.	DESCRIPTION		Inter-change	Reason for change	Effective time
1	ＬＸ－ＢＺ１１２７ＦＣＰＺ	AC	DD	L pulley step screw N	Ｌﾌﾟｰﾘｰ段ﾋﾞｽN			
2	ＰＣＯＶＰ０２６１ＱＳＺＺ	BC	GJ	Fusing upper cover	定着上ｶﾊﾞｰ			
3	ＬＦＲＭ－０１８５ＱＳＺＺ	AZ	FX	Fusing upper frame	定着上ﾌﾚｰﾑ			
4	ＰＢＲＳＳ００５２ＱＳＺＺ	AW	FG	Fusing after discharge brush	定着後除電ﾌﾞﾗｼ			
5	ＭＳＰＲＣ３０５９ＦＨＺ１	AQ	EQ	HR hold spring	HR 保持ｽﾌﾟﾘﾝｸﾞ			
6	ＸＢＢＳ７３０Ｐ０４０００	AA	DD	Screw(3×4)	ﾋﾞｽ			
7	ＰＴＭＥ－０３００ＦＣＺ１	AK	DX	Upper separator pawl	上剥離爪			
8	ＭＳＰＲＴ０７５４ＱＳＺＺ	AQ	EQ	Upper separating nail spring	上剥離ｽﾌﾟﾘﾝｸﾞ			
9	ＰＧｉＤＭ０３０９ＱＳＺＺ	AX	FQ	Fusing rear upper paper guide	定着後上ﾍﾟｰﾊﾟｰｶﾞｲﾄﾞ			
10	ＬＳＴＰＦ０１７２ＦＣＺ１	AA	DD	Roller stopper P	ﾛｰﾗｰｽﾄｯﾊﾟｰＰ			
11	ＮＧＥＲＨ０５１４ＱＳＺＺ	AW	GN	Fusing gear(38T)	定着ｷﾞｱ			
12	ＬＢＳＨＺ００１２ＱＳＺＺ	AR	EQ	Insulation bush	断熱ﾌﾞｯｼｭ			
13	ＮＢＲＧＹ００８２ＱＳＺＺ	AU	EZ	Heat roller bearing	ﾋｰﾄﾛｰﾗｰﾍﾞｱﾘﾝｸﾞ			
14	ＮＲＯＬＭ０２７０ＱＳＺＺ	BK	LP	Fusing roller	定着ﾛｰﾗｰ			
15	ＸＢＢＳ７４０Ｐ０６０００	AA	DD	Screw(4×6)	ﾋﾞｽ			
16	ＸＢＰＳ７３０Ｐ１０ＫＳ０	AB	DD	Screw(3×10KS)	ﾋﾞｽ			
⚠ 17	ＲＤＴＣＴ００３４ＱＳＺＺ	AR	EQ	Sub heat roller thermistor	ｻﾌﾞﾋｰﾄﾛｰﾗｰｻｰﾐｽﾀ			
18	ＸＢＢＳ７３０Ｐ０６０００	AC	DD	Screw(3×6)	ﾋﾞｽ			
⚠ 19	ＲＤＴＣＴ００３３ＱＳＺＺ	AW	FG	Non-contact thermistor	非接触ｻｰﾐｽﾀ			
20	ＸＷＨＵＷ３２－０２１２０	AW	FG	Washer	ﾎﾟﾘｽﾗｲﾀﾞｰ			
⚠ 21	ＲＤＴＣＴ００３２ＱＳＺＺ	BB	GD	Non-contact thermistor	非接触ｻｰﾐｽﾀ			
22	ＰＣＯＶＰ２４２３ＦＣＺＺ	AD	DJ	Thermistor cover	ｻｰﾐｽﾀｰｶﾊﾞｰ			
⚠ 23	ＲＴＨＭ－００５５ＦＣＺＺ	AU	EZ	Thermostat	ｻｰﾓｽﾀｯﾄ			
24	ＸＷＨＳ７３０－０５０８０	AA	DD	Washer(φ3-8)	ﾜｯｼｬｰ			
25	ＬＸ－ＢＺ１１８１ＦＣＺＺ	AB	DD	Screw(3×6)	ﾋﾞｽ			
26	ＰＴＭＥ－０３２８ＦＣＺＺ	AK	DX	Fusing lower PG pawl	定着下 PG 爪			

【027】
定着ﾕﾆｯﾄ 2 (Fusing unit 2)

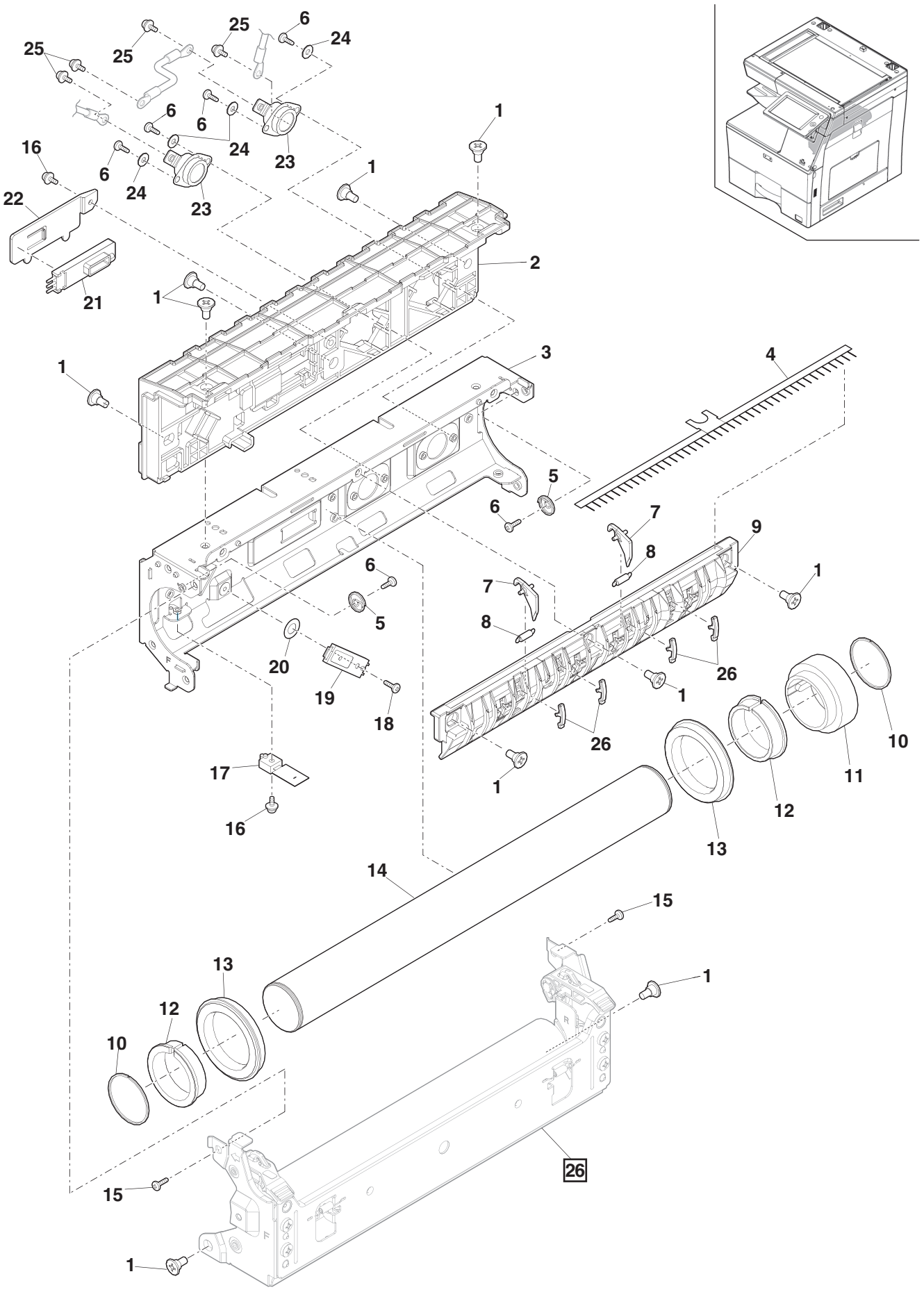

Update : 2018/Nov/9

【028】
定着ﾕﾆｯﾄ 3 (Fusing unit 3)

NO.	PARTS CODE	PRICE RANK Ex.	PRICE RANK Ja.	DESCRIPTION		Inter-change	Reason for change	Effective time
1	ＬＸ－ＢＺ１１２７ＦＣＰＺ	AC	DD	L pulley step screw N	Ｌﾌﾟｰﾘｰ段ﾋﾞｽN			
2	ＰＣＯＶＰ０２６３ＱＳＺＺ	AY	FQ	Fusing cover R	定着ｶﾊﾞｰR			
3	ＸＢＢＳ７４０Ｐ０６０００	AA	DD	Screw(4×6)	ﾋﾞｽ			
4	ＬＨＬＤＺ０３１５ＱＳＺＺ	AX	FQ	Lamp holder R	ﾗﾝﾌﾟﾎﾙﾀﾞｰR			
5	ＭＳＰＲＣ０７６０ＱＳＺＺ	AQ	EQ	Pressure release sub spring	加圧解除補助ｽﾌﾟﾘﾝｸﾞ			
6	ＸＲＥＳＰ５０－０６０００	AA	DD	E ring(E5)	Ｅﾘﾝｸﾞ			
7	ＬＰＬＴＭ０９８１ＱＳＺＺ	AR	EQ	Earth plate	ｱｰｽ板			
8	ＸＷＨＳ７６０－１４１３０	AW	FG	Washer	ﾎﾟﾘｽﾗｲﾀﾞｰ			
9	ＬＸ－ＢＺ０１１５ＱＳＺＺ	AF	EZ	Screw	ﾋﾞｽ			
10	ＮＧＥＲＨ０５１５ＱＳＺＺ	AR	EQ	Fusing connection gear(28T)	定着接続ｷﾞｱ			
11	ＰＧｉＤＭ０３０７ＱＳＺＺ	AX	FQ	Fusing front upper paper guide	定着前上ﾍﾟｰﾊﾟｰｶﾞｲﾄﾞ			
12	ＴＣＡＵＨ００２３ＱＳＺ１	AC	DJ	High temperature caution label	高温注意ﾗﾍﾞﾙ			
13	ＰＧｉＤＭ０３０８ＱＳＺＺ	AY	FQ	Fusing rear under paper guide	定着後下ﾍﾟｰﾊﾟｰｶﾞｲﾄﾞ			
14	ＰＧｉＤＭ０３１０ＱＳＺＺ	AY	FQ	Fusing under paper guide	定着下ﾍﾟｰﾊﾟｰｶﾞｲﾄﾞ			
15	ＴＬＡＢＨ５７３８ＦＨＺＺ	AG	DX	Envelope label	封筒ﾗﾍﾞﾙ			
16	ＰＣＯＶＰ０２６２ＱＳＺＺ	AX	FQ	Fusing cover F	定着ｶﾊﾞｰF			
17	ＬＨＬＤＺ０３１４ＱＳＺＺ	AX	FQ	Lamp holder F	ﾗﾝﾌﾟﾎﾙﾀﾞｰF			
⚠ 18 ♣	ＲＬＭＰＵ００６２ＱＳＺＺ	BN	LP	Hearter lamp	ﾋｰﾀｰﾗﾝﾌﾟ			
⚠	ＲＬＭＰＵ００６３ＱＳＺＺ	BP	LP	Hearter lamp	ﾋｰﾀｰﾗﾝﾌﾟ			
⚠	ＲＬＭＰＵ００６１ＱＳＺＺ	BM	LP	Hearter lamp	ﾋｰﾀｰﾗﾝﾌﾟ			
19	ＴＬＡＢＺ１１１７ＱＳＺＺ	AG	DX	Fusing green label	定着ｸﾞﾘｰﾝﾗﾍﾞﾙ			

Matrix

No.18	ﾋｰﾀｰﾗﾝﾌﾟ (Hearter lamp)		
PARTS CODE	Americas	Europe Australia Asia Class B	Japan
ＲＬＭＰＵ００６１ＱＳＺＺ	1st Lot		
ＲＬＭＰＵ００６２ＱＳＺＺ		1st Lot	
ＲＬＭＰＵ００６３ＱＳＺＺ			1st Lot

【028】
定着ﾕﾆｯﾄ 3 (Fusing unit 3)

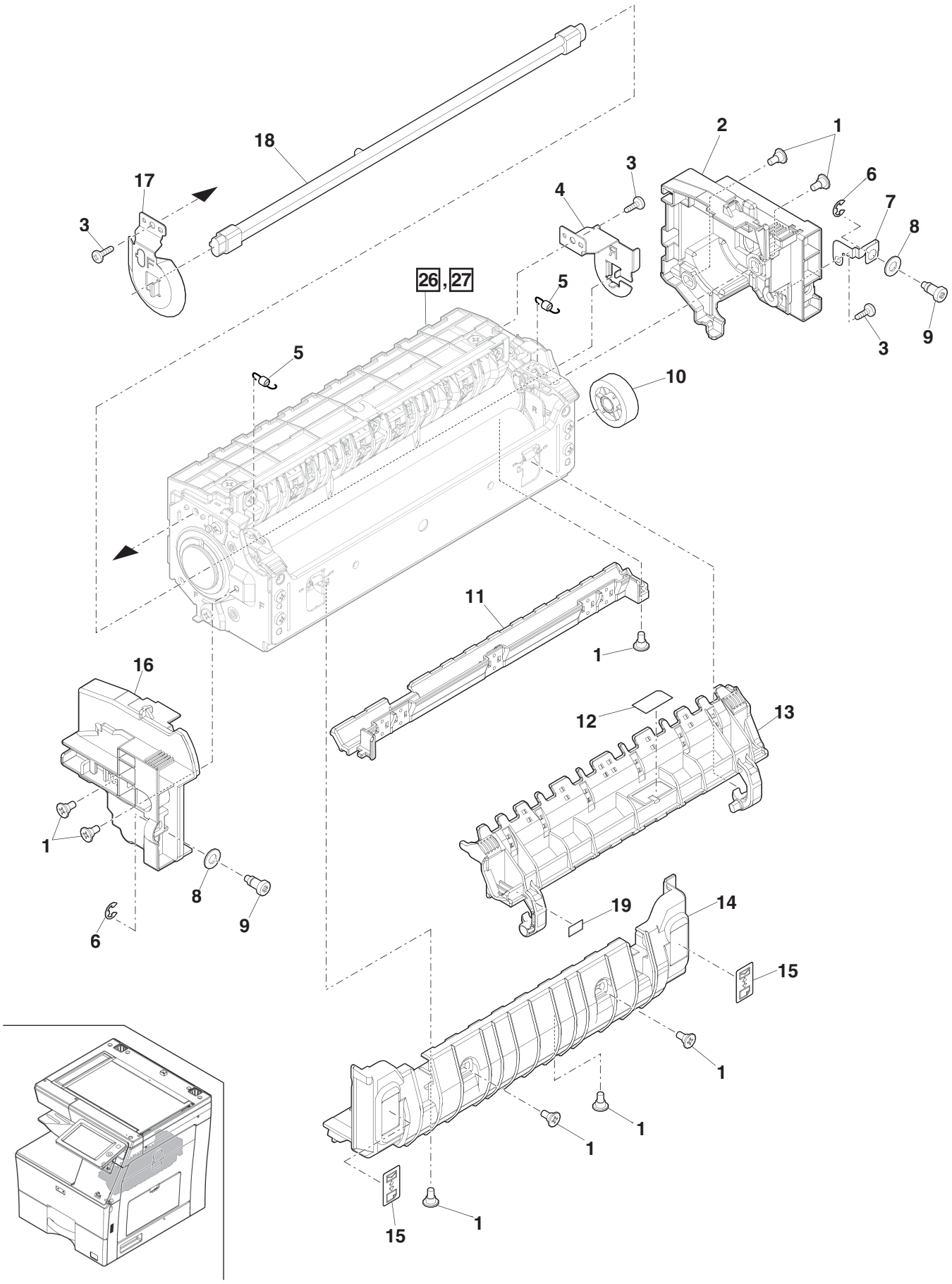

Update : 2018/Nov/9

【029】
右ﾄﾞｱﾕﾆｯﾄ 1 (Right door unit 1)

NO.	PARTS CODE	PRICE RANK Ex.	PRICE RANK Ja.	DESCRIPTION		Inter-change	Reason for change	Effective time
1	XEBS730P10000	AC	DD	Screw(3×10)	ﾋﾞｽ			
2	GCŌV-0154QSZZ	AZ	FX	ADU cabinet upper	ADU ｷｬﾋﾞ上			
3	XBBS730P06000	AC	DD	Screw(3×6)	ﾋﾞｽ			
4	MLEVP0217QSZZ	AX	FQ	ADU lock releasing lever	ADU ﾛｯｸ解除ﾚﾊﾞｰ			
5	LSTYM0028QSZZ	BB	GD	ADU lock plate	ADU ﾛｯｸ板			
6	XRESP50-06000	AA	DD	E ring(E5)	E ﾘﾝｸﾞ			
7	NBRGP0696FCZZ	AE	DJ	Bearing	軸受			
8	NRŌLR0277QSZZ	AX	FQ	ADU P-in roller	ADU 入紙ﾛｰﾗｰ			
9	PTME-0059QSZZ	AX	FQ	ADU lock pawl F	ADU ﾛｯｸ爪 F			
10	LDAiZ0078QSZZ	BG	GX	ADU base	ADU 台板			
11	PGiDM0316QSZZ	BC	GJ	ADU reversing paper guide	ADU 反転ﾍﾟｰﾊﾟｰｶﾞｲﾄﾞ			
12	PTME-0058QSZZ	AR	EQ	Fusing PG push button	定着 PG ﾌﾟｯｼｭﾎﾞﾀﾝ			
13	MSPRC0707QSZZ	AQ	EQ	Fusing pg push spring	定着 PG 加圧ｽﾌﾟﾘﾝｸﾞ			
14	LHLDZ0317QSZZ	AS	EZ	Fusing PG push button holder	定着 PG ﾌﾟｯｼｭﾎﾞﾀﾝﾎﾙﾀﾞｰ			
15	NRŌLP1774FCZZ	AD	DJ	Transport follower roller	搬送従動ﾛｰﾗｰ			
16	MSPRD0733QSZZ	AQ	EQ	ADU P-in idle roller spring	ADU 入紙従動ﾛｰﾗｰｽﾌﾟﾘﾝｸﾞ			
17	NRŌLR0278QSZZ	AY	FQ	ADU P-out roller	ADU 出紙ﾛｰﾗｰ			
18	PGiDM0318QSZZ	BC	GJ	ADU duct paper guide	ADU ﾀﾞｸﾄﾍﾟｰﾊﾟｰｶﾞｲﾄﾞ			
19	PMLT-0319QSZZ	AN	EQ	ADU duct paper guide cushion A	ADU ﾀﾞｸﾄﾍﾟｰﾊﾟｰｶﾞｲﾄﾞﾓﾙﾄ A			
20	PGiDM0317QSZZ	AZ	FX	ADU paper guide	ADU ﾍﾟｰﾊﾟｰｶﾞｲﾄﾞ			
21	MSPRD0734QSZZ	AQ	EQ	ADU P-out idle roller spring	ADU 出紙従動ﾛｰﾗｰｽﾌﾟﾘﾝｸﾞ			
22	PCLR-0485FCZZ	AD	DJ	U-turn collar	U ﾀｰﾝｺﾛ			
23	MSPRC0731QSZZ	AR	EQ	ADU earth spring	ADU ｱｰｽｽﾌﾟﾘﾝｸﾞ			
24	NPLYZ0070QSZZ	AQ	EQ	Pulley(28P)	ﾌﾟｰﾘｰ			
25	NBLTH0066QSZZ	AX	FQ	ADU transport belt	ADU 搬送ﾍﾞﾙﾄ			
26	LPiNS0327FCZZ	AC	DJ	Spring pin(φ2-10)	ｽﾌﾟﾘﾝｸﾞﾋﾟﾝ			
27	NBRGC0651FCZZ	AD	DJ	Bearing	軸受			
28	NGERH0531QSZZ	AQ	EQ	Adu joint gear	ADU 連結ｷﾞｱ			
29	PTME-0060QSZZ	AX	FQ	ADU lock pawl R	ADU ﾛｯｸ爪 R			
30	MSPRD0732QSZZ	AQ	EQ	ADU lock spring	ADU ﾛｯｸｽﾌﾟﾘﾝｸﾞ			
31	LBNDZ0011QSZZ	AR	EQ	ADU band	ADU ﾊﾞﾝﾄﾞ			
32	PSHEP1054QSZZ	AN	EQ	ADU reversing PG mylar	ADU 反転 PG ﾏｲﾗｰ			
33	PDUC-0039QSZZ	AX	FQ	ADU duct lower	ADU ﾀﾞｸﾄ下			
34	PDUC-0040QSZZ	AX	FQ	ADU duct upper	ADU ﾀﾞｸﾄ上			
35	PMLT-0310QSZZ	AN	EQ	ADU duct cushion	ADU ﾀﾞｸﾄﾓﾙﾄ			
	(Unit)							
901	DUNT-1388QSZZ	CB	TZ	Right door unit [With Block 30,Block 31]	右ﾄﾞｱﾕﾆｯﾄ			

【029】
右ﾄﾞｱﾕﾆｯﾄ 1 (Right door unit 1)

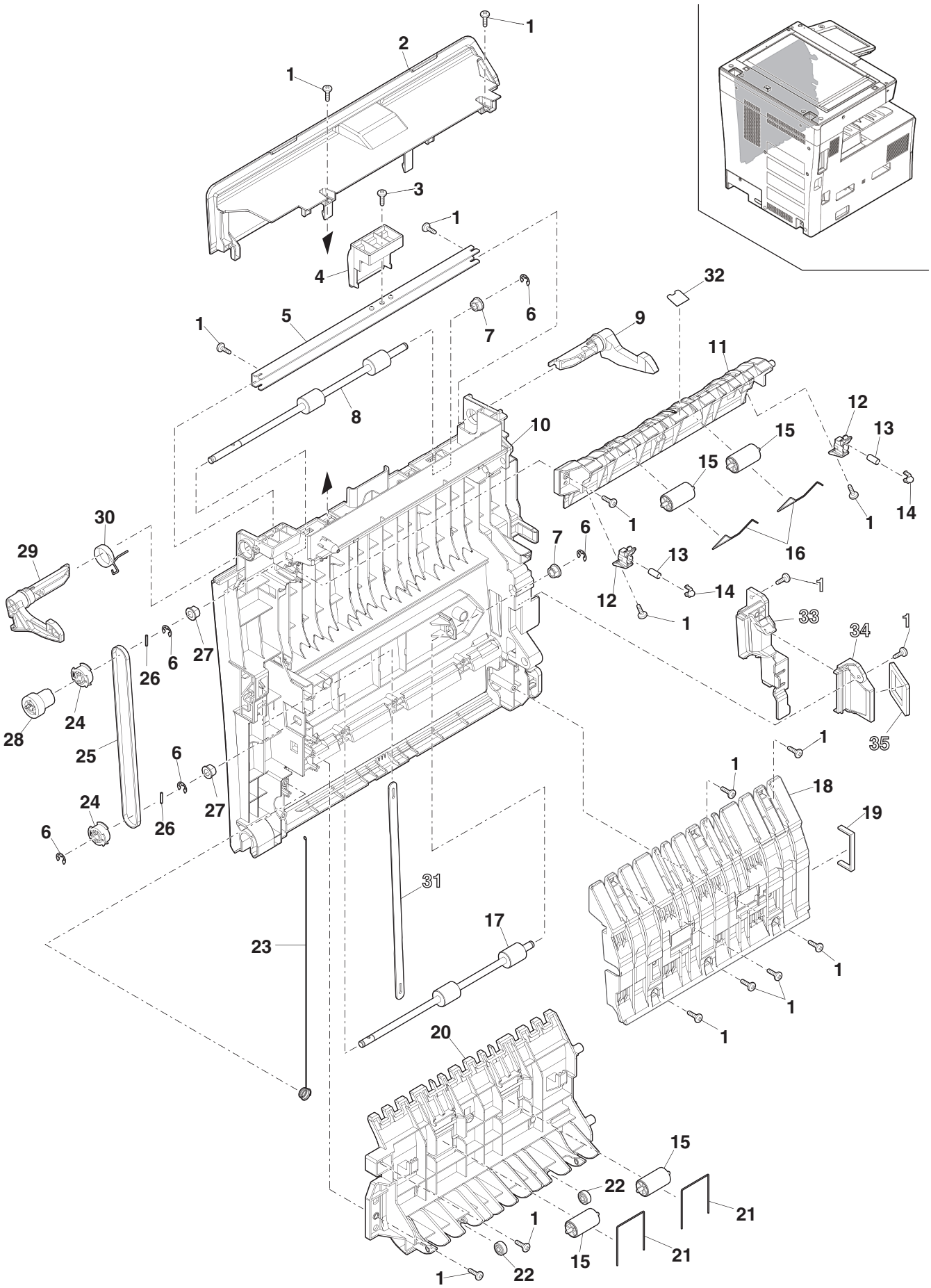

Update : 2018/Nov/9

【030】
右ﾄﾞｱﾕﾆｯﾄ 2 (Right door unit 2)

NO.	PARTS CODE	PRICE RANK Ex.	PRICE RANK Ja.	DESCRIPTION		Inter-change	Reason for change	Effective time
1	PGiDM0296QSZZ	AX	FQ	After transfer paper guide	転写後ﾍﾟｰﾊﾟｰｶﾞｲﾄﾞ			
2	MSPRC0692QSZZ	AQ	EQ	TC unit positioning spring	TC ﾕﾆｯﾄ位置決めｽﾌﾟﾘﾝｸﾞ			
3	LFRM-0181QSZZ	BC	GJ	Transfer outer frame	転写ｱｳﾀｰﾌﾚｰﾑ			
4	LX-NZ0112FCZZ	AA	DD	Plate nut(M4)	板ﾅｯﾄ			
5	LDAiZ0072QSZZ	AU	FG	TC roller compression block	TC ﾛｰﾗｰ圧縮ﾌﾞﾛｯｸ			
6	MSPRC0691QSZZ	AQ	EQ	TC roller compression spring	TC ﾛｰﾗｰ圧縮ｽﾌﾟﾘﾝｸﾞ			
7	LDAiZ0071QSZZ	AV	FG	TC frame support block	TC ﾌﾚｰﾑ保持ﾌﾞﾛｯｸ			
8	XEBS730P10000	AC	DD	Screw(3×10)	ﾋﾞｽ			
9	MSPRT0699QSZZ	AQ	EQ	TC outer frame control spring	TC ｱｳﾀｰﾌﾚｰﾑｺﾝﾄﾛｰﾙｽﾌﾟﾘﾝｸﾞ			
10	VRH-PT2HC516JT	AF	DS	Resistor unit	抵抗ﾕﾆｯﾄ			
11	XBPS740P08KS0	AB	DD	Screw(4×8KS)	ﾋﾞｽ			
12	LHLDZ0311QSZZ	AX	FQ	Procon sensor holder	ﾌﾟﾛｺﾝｾﾝｻｰﾎﾙﾀﾞｰ			
13	MSPRC0693QSZZ	AQ	EQ	Before transfer PG earth spring	転写前 PG ｱｰｽｽﾌﾟﾘﾝｸﾞ			
14	CPWBF2255FC52	AV	FG	Process sensor PWB	ﾌﾟﾛｾｽｾﾝｻｰ基板			
15	XEBS740P10000	AA	DD	Screw(4×10)	ﾋﾞｽ			
16	PGiDM0321QSZZ	BD	GN	MF upper paper guide	MF 上ﾍﾟｰﾊﾟｰｶﾞｲﾄﾞ			
17	PCŌVP0265QSZZ	AX	FQ	MF maintenance cover	MF ﾒﾝﾃﾅﾝｽｶﾊﾞｰ			
18	PCLR-0501FCZZ	AB	DJ	Delivery guide collar	排紙ｶﾞｲﾄﾞｺﾛ			
19	LSTPP0016QSZZ	AC	DJ	Resin ring(E5)	樹脂ﾘﾝｸﾞ			
20	NRŌLR0212QSB1	AM	EG	Paper feeding roller	給紙ﾛｰﾗｰ			
21	NCPL-0081FCZZ	AH	DX	One way coupling	ﾜﾝｳｪｲｶｯﾌﾟﾘﾝｸﾞ			
22	XRESP50-06000	AA	DD	E ring(E5)	E ﾘﾝｸﾞ			
23	NBRGM0968FCZZ	AC	DD	Bearing(φ6)	軸受			
24	QEARP0041QSZZ	AX	FQ	MF earth plate	MF ｱｰｽ板			
25	NGERH0535QSZZ	AQ	EQ	MF PF gear(27T)	MF PF ｷﾞｱ			
26	NSFTZ0246QSZZ	AX	FQ	MF PF shaft	MF PF ｼｬﾌﾄ			
27	XPSSJ20-08000	AA	DD	Spring pin(φ2-8)	ｽﾌﾟﾘﾝｸﾞﾋﾟﾝ			
28	PCLR-0035QSZZ	AR	EQ	MF lock release SP collar	MF ﾛｯｸ解除 SP ｶﾗｰ			
29	MSPRC0728QSZZ	AQ	EQ	MF lock release spring	MF ﾛｯｸ解除ｽﾌﾟﾘﾝｸﾞ			
30	NGERH0536QSZZ	AQ	EQ	MF gear(16T)	MF ｷﾞｱ			
31	XEPS730P08X00	AA	DD	Screw(3×8X)	ﾋﾞｽ			
32	LPLTM0685QSZ1	AC	DD	Pick up plate	呼び込みﾌﾟﾚｰﾄ			
33	PTPE-0076SSZZ	AQ	EQ	Pick up plate sheet	呼び込みﾌﾟﾚｰﾄｼｰﾄ			
34	PCŌVP0266QSZZ	AX	FQ	MF separation cover	MF 分離ｶﾊﾞｰ			
35	XRESP30-06000	AA	DD	E ring(E3)	E ﾘﾝｸﾞ			
36	NRŌLR0213QSAZ	AK	DX	Separation roller	分離ﾛｰﾗｰ			
37	MSPRC0727QSZZ	AQ	EQ	MF separation tl spring	MF 分離 TL ｽﾌﾟﾘﾝｸﾞ			
38	NSFTZ0154SSZZ	AR	EQ	Following roller shaft	従動ﾛｰﾗｰｼｬﾌﾄ			
39	PCLR-0034QSZZ	AQ	EQ	MF separation TL collar	MF 分離 TL ｶﾗｰ			
40	LHLDZ0330QSZZ	AX	FQ	MF separation holder	MF 分離ﾎﾙﾀﾞｰ			
41	MSPRC0542SSZZ	AQ	EQ	MF separation pressure spring	MF 分離加圧ｽﾌﾟﾘﾝｸﾞ			
42	PGiDM0322QSZZ	AX	FQ	MF lower paper guide	MF 下ﾍﾟｰﾊﾟｰｶﾞｲﾄﾞ			
43	MARMP0102QSZZ	AQ	EQ	MF lock release arm	MF ﾛｯｸ解除ｱｰﾑ			
44	XEBS730P08000	AC	DD	Screw(3×8)	ﾋﾞｽ			
45	VHPSG2A241+-1	AG	DX	Photo sensor(SG2A241)	ﾌｫﾄｾﾝｻｰ			
46	PGiDM0323QSZZ	BB	GD	MF left lower paper guide	MF 左下ﾍﾟｰﾊﾟｰｶﾞｲﾄﾞ			
47	MSPRD0729QSZZ	AQ	EQ	MF PE actuator spring	MF PE ｱｸﾁｭｴｰﾀｰｽﾌﾟﾘﾝｸﾞ			
48	MLEVP0219QSZZ	AQ	EQ	MF PE actuator	MF PE ｱｸﾁｭｴｰﾀｰ			
49	PBRSS0054QSZZ	AQ	EQ	PF discharge brush	PF 除電ﾌﾞﾗｼ			
501	DUNT-1389QSZZ	BW	RR	Multi PF unit [With Block 31]	ﾏﾙﾁ PF ﾕﾆｯﾄ			

Update : 2018/Nov/9

【030】
右ﾄﾞｱﾕﾆｯﾄ 2 (Right door unit 2)

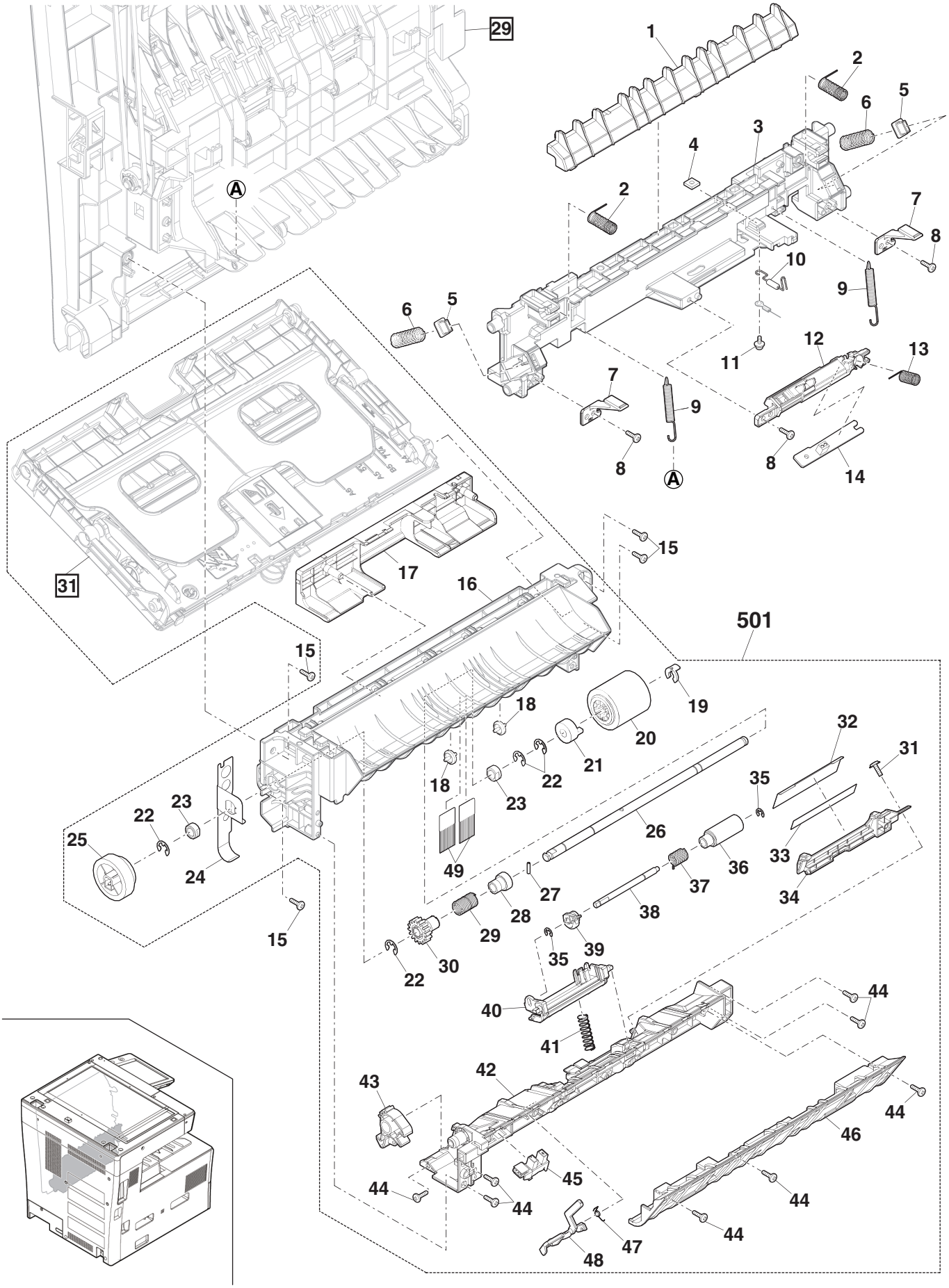

Update : 2018/Nov/9

【031】
右ﾄﾞｱﾕﾆｯﾄ 3 (Right door unit 3)

NO.	PARTS CODE	PRICE RANK Ex.	PRICE RANK Ja.	DESCRIPTION		Inter-change	Reason for change	Effective time
1	ＬＰＬＴＰ０６６２ＱＳＺＺ	AE	DS	MF size regulation plate L	MF ｻｲｽﾞ規制板 L			
2	ＰＳＨＥＺ０８３０ＳＳＺＺ	AQ	EQ	MF sound deadening suede	MF 消音ｽｴｰﾄﾞ			
3	ＬＰＬＴＰ０６６３ＱＳＺＺ	AE	DS	MF size regulation plate R	MF ｻｲｽﾞ規制板 R			
4	ＬＰＬＴＰ１０００ＱＳＺＺ	AX	FQ	MF tray	MF ﾄﾚｰ			
5	ＰＳＨＥＺ０７７７ＱＳＺＺ	AC	DD	Rotation plate pick up sheet	回転板呼び込みｼｰﾄ			
6	ＭＳＰＲＣ０５４４ＳＳＺＺ	AQ	EQ	MF rotation plate rock spring	MF 回転板ﾛｯｸｽﾌﾟﾘﾝｸﾞ			
7	ＭＳＬｉＰ０００４ＱＳＺＺ	AX	FQ	MF tray slider	MF ﾄﾚｲｽﾗｲﾀﾞｰ			
8	ＭＡＲＭＰ０１０３ＱＳＺＺ	AU	FG	MF tray link arm	MF ﾄﾚｲﾘﾝｸｱｰﾑ			
9	ＭＳＰＲＣ０５４３ＳＳＺＺ	AQ	EQ	MF rotation plate spring	MF 回転板ｽﾌﾟﾘﾝｸﾞ			
10	ＮＧＥＲＨ０３７１ＱＳＺＺ	AC	DD	MF regulation plate gear	MF 規制板ｷﾞｱ			
11	ＰＭＬＴ－０２４７ＳＳＺＺ	AM	EG	MF sound deadening cushion	MF 消音ﾓﾙﾄ			
12	ＬＳＯＵ－００８６ＱＳＺＺ	BC	GJ	MF tray cabinet	MF ﾄﾚｲｷｬﾋﾞ			
13	ＬＳＯＵ－００８７ＱＳＺＺ	BB	GD	MF extention tray	MF 延長ﾄﾚｲ			

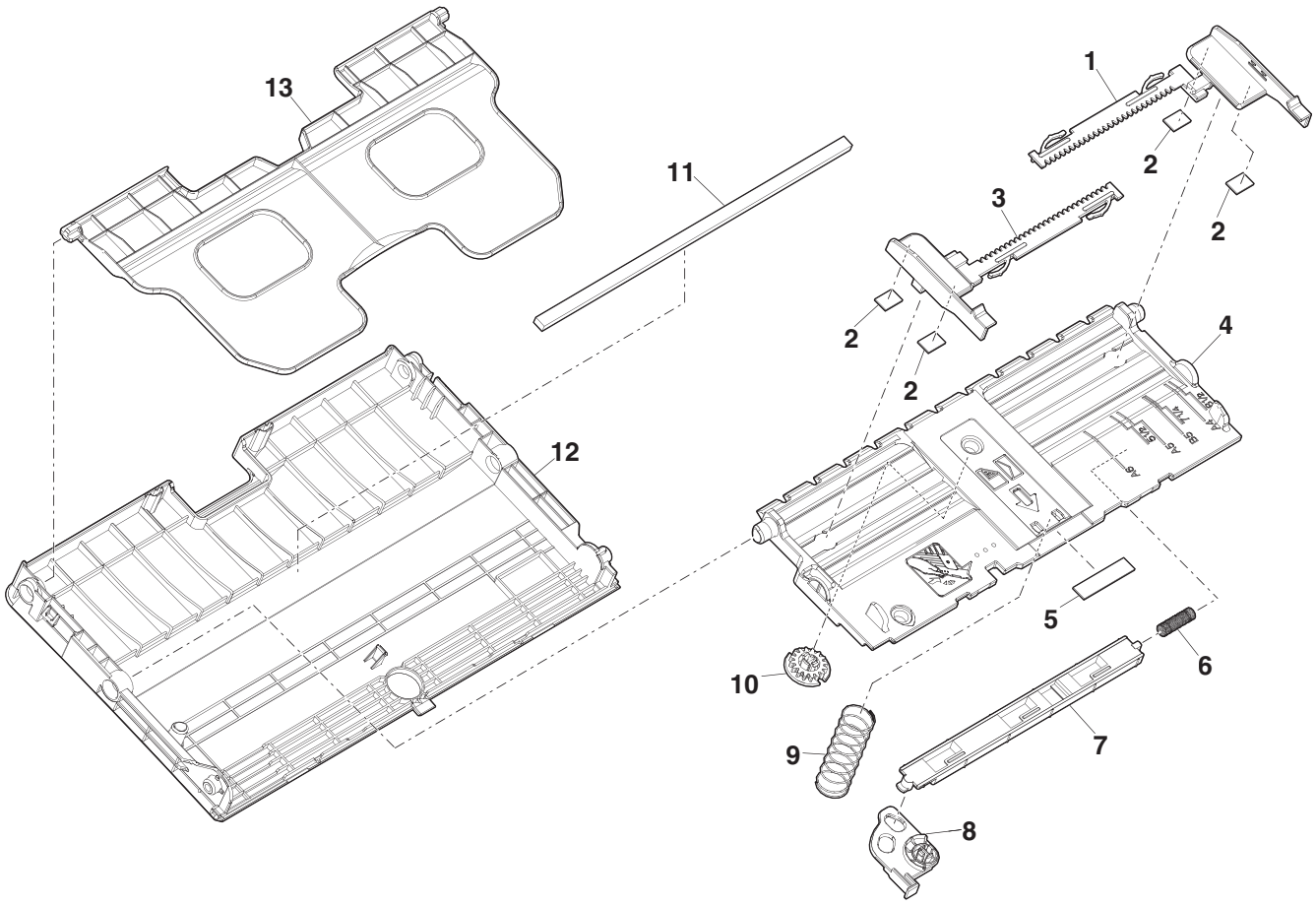

Update : 2018/Nov/9

【032】
排紙ﾕﾆｯﾄ (Delivery unit)

NO.	PARTS CODE	PRICE RANK Ex.	PRICE RANK Ja.	DESCRIPTION		Inter-change	Reason for change	Effective time
1	NBRGC0651FCZZ	AD	DJ	Bearing	軸受			
2	XRESP50−06000	AA	DD	E ring(E5)	Eﾘﾝｸﾞ			
3	NRŌLR0267QSZZ	AY	FQ	Delivery roller	排紙ﾛｰﾗｰ			
4	NBRGP0897FCZ2	AC	DD	ADU bearing	ADU 軸受			
5	MSPRC0756QSZZ	AQ	EQ	Delivery roller shaft earth spring	排紙ﾛｰﾗｰｼｬﾌﾄｱｰｽｽﾌﾟﾘﾝｸﾞ			
6	PSHEZ1037QSZZ	AQ	EQ	Delivery earth sheet	排紙ｱｰｽｼｰﾄ			
7	PBRSS0048QSZZ	AT	EZ	Discharge brush F	除電ﾌﾞﾗｼ F			
8	PSHEZ1036QSZZ	AQ	EQ	Delivery discharge sheet	排紙除電ｼｰﾄ			
9	LFiX−0045QSZZ	AX	FQ	Paper fixing arm	用紙押えｱｰﾑ			
10	NGERH0504QSZZ	AQ	EQ	Delivery roller drive gear	排紙ﾛｰﾗｰ駆動ｷﾞｱ			
11	NGERH2217FCZZ	AF	DS	AG paddle gear(21T)	AG ﾊﾟﾄﾞﾙｷﾞｱ			
12	PGiDM0297QSZZ	BE	GN	Delivery upper paper guide	排紙上ﾍﾟｰﾊﾟｰｶﾞｲﾄﾞ			
13	VHPSG2A241+−1	AG	DX	Photo sensor(SG2A241)	ﾌｫﾄｾﾝｻｰ			
14	MLEVP0206QSZZ	AY	FQ	Empty detection actuator	紙有無検知ｱｸﾁｪﾀｰ			
15	MLEVP0960FCZZ	AC	DJ	Full detect actuator	満杯検知ｱｸﾁｭｴｰﾀｰ			
16	PGiDM0299QSZZ	AX	FQ	Reverse gate	反転ｹﾞｰﾄ			
17	PMLT−0309QSZZ	AM	EG	Silent cushion	消音ﾓﾙﾄ			
18	MLEVP0205QSZZ	AX	FQ	Delivery paper detect actuator	排紙検知ｱｸﾁｭｴｰﾀｰ			
19	PGiDM0298QSZZ	BD	GN	Delivery under paper guide	排紙下ﾍﾟｰﾊﾟｰｶﾞｲﾄﾞ			
20	XEBS730P08000	AC	DD	Screw(3×8)	ﾋﾞｽ			
21	NRŌLP1774FCZZ	AD	DJ	Transport follower roller	搬送従動ﾛｰﾗｰ			
22	MSPRD0697QSZZ	AQ	EQ	Delivery following roller spring F	排紙従動ﾛｰﾗｰｽﾌﾟﾘﾝｸﾞ F			
23	PSPŌ−0043QSZZ	AN	EQ	Delivery sponge	排紙ｽﾎﾟﾝｼﾞ			
24	NRŌLP0234QSZZ	AE	DJ	Delivery follower roller	排紙従動ﾛｰﾗｰ			
25	MSPRD0696QSZZ	AQ	EQ	Delivery following roller spring R	排紙従動ﾛｰﾗｰｽﾌﾟﾘﾝｸﾞ R			
26	XEBS740P10000	AA	DD	Screw(4×10)	ﾋﾞｽ			
27	N PSHEP1072QSZZ	AW	FG	Silent cushion	消音ﾓﾙﾄ	-	Improve performance	18/Apr
	(Unit)							
901	DUNT−1390QSZZ	BT	MW	Delivery unit	排紙ﾕﾆｯﾄ			

【032】
排紙ﾕﾆｯﾄ (Delivery unit)

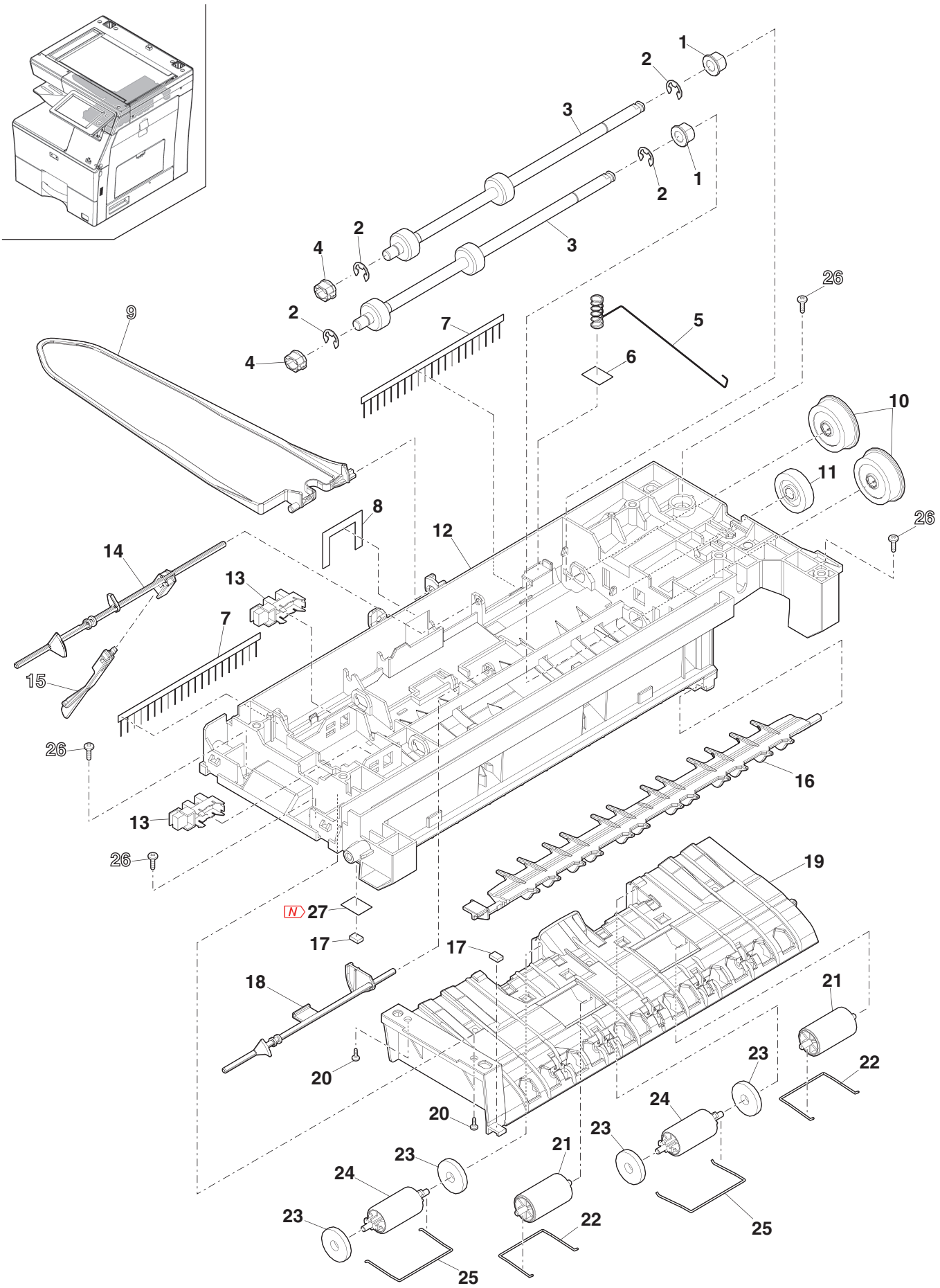

Update : 2018/Nov/9

【033】
ﾒｲﾝ駆動ﾕﾆｯﾄ (Main drive unit)

NO.	PARTS CODE	PRICE RANK Ex.	PRICE RANK Ja.	DESCRIPTION		Inter-change	Reason for change	Effective time
1	XHBS730P06000	AC	DD	Screw(3×6)	ﾋﾞｽ			
2	XEBS740P10000	AA	DD	Screw(4×10)	ﾋﾞｽ			
3	XHBS730P08000	AB	DD	Screw(3×8)	ﾋﾞｽ			
4	RMŌTP0100QSPZ	BF	GN	Motor	ﾓｰﾀｰ			
5	RMŌTP0099QSPZ	BM	HV	Motor	ﾓｰﾀｰ			
6	NGERH0493QSZZ	AR	EQ	Delivery reduction gear(69-33T)	排紙減速ｷﾞｱ			
7	CFRM-0179QS01	BE	GN	Main drive plate	ﾒｲﾝ駆動板			
8	NGERH0486QSZZ	AQ	EQ	DV idle gear(66T)	DV ｱｲﾄﾞﾙｷﾞｱ			
9	NGERH0488QSZZ	AQ	EQ	PS reduction gear(66-26T)	PS 減速ｷﾞｱ			
10	NGERH0487QSZZ	AQ	EQ	DV idle gear(70T)	DV ｱｲﾄﾞﾙｷﾞｱ			
11	NGERH0490QSZZ	AQ	EQ	PS idle gear(25T)	PS ｱｲﾄﾞﾙｷﾞｱ			
12	NBRGP0105QSZZ	AQ	EQ	Bearing(Nonconductive)	ﾍﾞｱﾘﾝｸﾞ			
13	PCLC-0402FCZZ	AT	EZ	Clutch(3.5Kg)	ｸﾗｯﾁ			
14	XRESP50-06000	AA	DD	E ring(E5)	E ﾘﾝｸﾞ			
15	CSFTZ0220QS51	AS	EZ	PS drive shaft unit	PS 駆動軸ﾕﾆｯﾄ			
16	LHLDZ0307QSZZ	AX	FQ	Drive quiet cover	駆動静音ｶﾊﾞｰ			
17	NGERH0492QSZZ	AR	EQ	Fuser connect gear(25T)	定着接続ｷﾞｱ			
18	NGERH0491QSZZ	AY	FQ	Fuser drive gear(87T)	定着駆動ｷﾞｱ			
19	XBPS730P06KS0	AB	DD	Screw(3×6KS)	ﾋﾞｽ			
20	NGERH0489QSZZ	AR	EQ	DV drive gear(68T)	DV 駆動ｷﾔ			
21	NGERH0483QSZZ	AX	FQ	DM drive gear(134T)	DM 駆動ｷﾞｱ			
22	CSFTZ0221QS51	AP	EQ	DM ground shaft unit	DM ｸﾞﾗｳﾝﾄﾞ軸ﾕﾆｯﾄ			
23	MSPRC0689QSZZ	AQ	EQ	DM ground spring	DM ｱｰｽｽﾌﾟﾘﾝｸﾞ			
24	NGERH0485QSZZ	AQ	EQ	DM wast toner gear(29-16T)	DM 廃ﾄﾅｰｷﾞｱ			
25	NGERH0484QSZZ	AR	EQ	DM idle gear(60T)	DM ｱｲﾄﾞﾙｷﾞｱ			
	(Unit)							
901	CFRM-0179QS51	BV	RB	Main drive unit	ﾒｲﾝ駆動ﾕﾆｯﾄ			

Update : 2018/Nov/9

【033】
ﾒｲﾝ駆動ﾕﾆｯﾄ (Main drive unit)

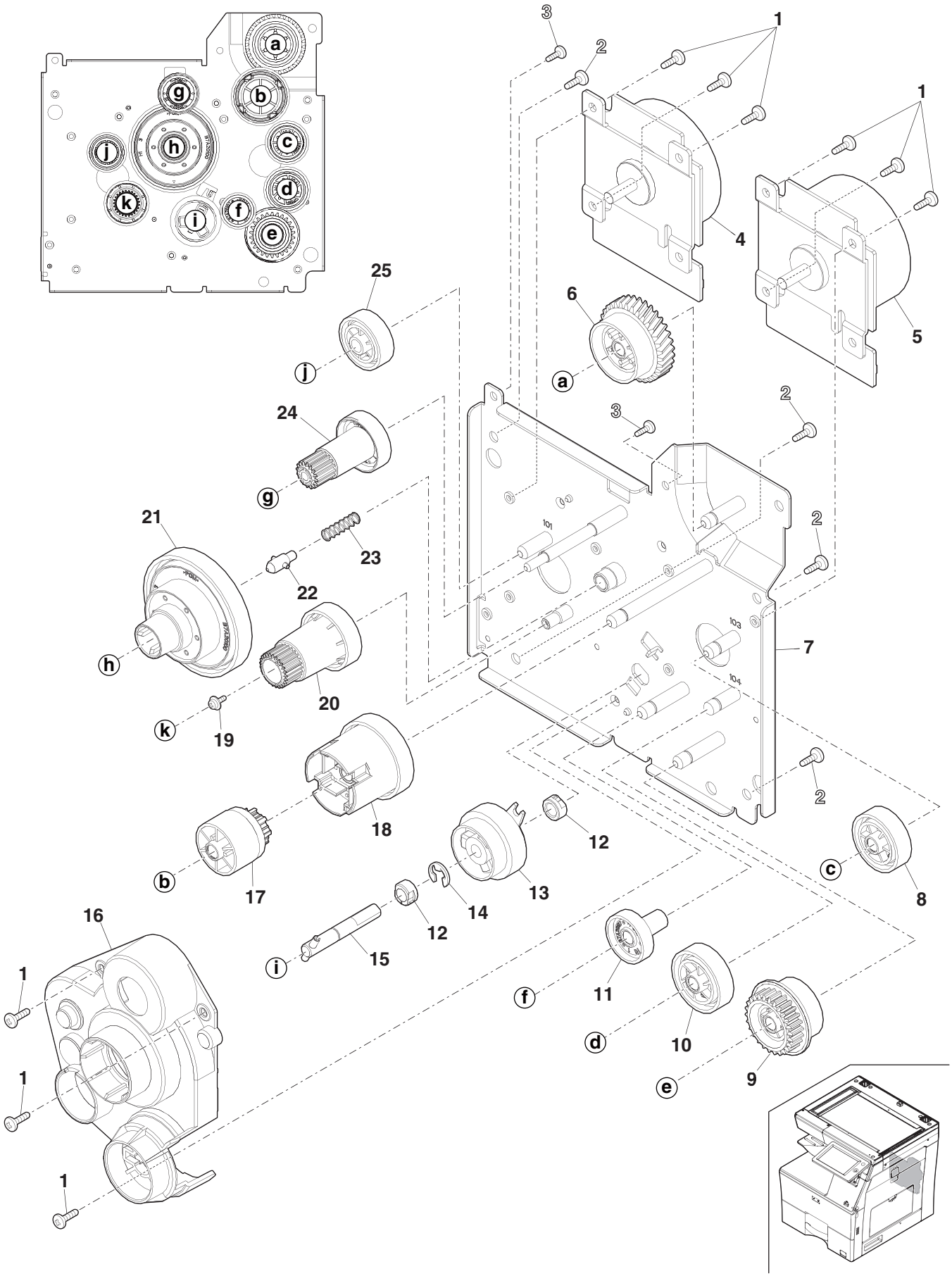

Update : 2018/Nov/9

【034】
給紙駆動･排紙駆動 (Paper feeding drive・Delivery drive)

NO.	PARTS CODE	PRICE RANK Ex.	PRICE RANK Ja.	DESCRIPTION		Inter-change	Reason for change	Effective time
1	ＸＥＢＳ７４０Ｐ１００００	AA	DD	Screw(4×10)	ﾋﾞｽ			
2	ＬＨＬＤＺ０３０９ＱＳＺＺ	AY	FQ	Delivery drive cover	排紙駆動ｶﾊﾞｰ			
3	ＮＢＲＧＰ０１０５ＱＳＺＺ	AQ	EQ	Bearing(Nonconductive)	ﾍﾞｱﾘﾝｸﾞ			
4	ＮＧＥＲＨ０４９９ＱＳＺＺ	AQ	EQ	Delivery drive gear(36T)	排紙駆動ｷﾞｱ			
5	ＮＳＦＴＺ０２２４ＱＳＺＺ	AX	FQ	Delivery drive shaft	排紙駆動ｼｬﾌﾄ			
6	ＸＲＥＳＰ５０－０６０００	AA	DD	E ring(E5)	Ｅﾘﾝｸﾞ			
7	ＰＣＬＣ－０４０２ＦＣＺＺ	AT	EZ	Clutch(3.5Kg)	ｸﾗｯﾁ			
8	ＮＳＦＴＺ０２５０ＱＳＺＺ	AR	EQ	Delivery invert shaft	排紙反転ｼｬﾌﾄ			
9	ＮＧＥＲＨ０５０１ＱＳＺＺ	AU	FG	Delivery gear R(32T)	排紙ｷﾞｱ R			
10	ＮＧＥＲＨ０５０２ＱＳＺＺ	AU	FG	Delivery gear F(31T)	排紙ｷﾞｱ F			
11	ＮＧＥＲＨ０４９７ＱＳＺＺ	AQ	EQ	ADU drive gear(32T)	ADU 駆動ｷﾞｱ			
12	ＮＳＦＴＺ０２２５ＱＳＺＺ	AR	EQ	ADU drive shaft	ADU 駆動ｼｬﾌﾄ			
13	ＮＧＥＲＨ０４９６ＱＳＺＺ	AQ	EQ	Delivery idle gear(30T)	排紙ｱｲﾄﾞﾙｷﾞｱ			
14	ＬＸ－ＷＺ０１９８ＦＨＺ１	AQ	EQ	DV poly slider	DV ﾎﾟﾘｽﾗｲﾀﾞｰ			
15	ＮＳＦＴＺ０２５８ＱＳＺＺ	AR	EQ	Gear sliding shaft	ｷﾞｱｽﾗｲﾄﾞｼｬﾌﾄ			
16	ＬＰｉＮＳ０３２７ＦＣＺＺ	AC	DJ	Spring pin(φ2-10)	ｽﾌﾟﾘﾝｸﾞﾋﾟﾝ			
17	ＮＧＥＲＨ０４９８ＱＳＺＺ	AQ	EQ	ADU connect gear(20T)	ADU 接続ｷﾞｱ			
18	ＮＧＥＲＨ０５００ＱＳＺＺ	AQ	EQ	Delivery connect gear(30T)	排紙接続ｷﾞｱ			
19	ＬＨＬＤＺ０３０８ＱＳＺＺ	AX	FQ	Paper feed drive cover	給紙駆動ｶﾊﾞｰ			
20	ＣＳＦＴＺ０２２２ＱＳ５１	AS	EZ	Paper feed drive shaft unit	給紙駆動軸ﾕﾆｯﾄ			
21	ＮＧＥＲＨ０４９４ＱＳＺＺ	AQ	EQ	Paper feed reduction gear(31-26T)	給紙減速ｷﾞｱ			
22	ＮＧＥＲＨ０５４０ＱＳＺＺ	AQ	EQ	Paper feed idle gear(32T)	給紙ｱｲﾄﾞﾙｷﾞｱ			
23	ＮＳＦＴＺ０２２３ＱＳＺＺ	AR	EQ	Multi feed drive shaft	ﾏﾙﾁ給紙駆動ｼｬﾌﾄ			
24	ＮＧＥＲＨ０４９５ＱＳＺＺ	AQ	EQ	Multi feed drive gear(18T)	ﾏﾙﾁ給紙駆動ｷﾞｱ			

【034】
給紙駆動･排紙駆動 (Paper feeding drive・Delivery drive)

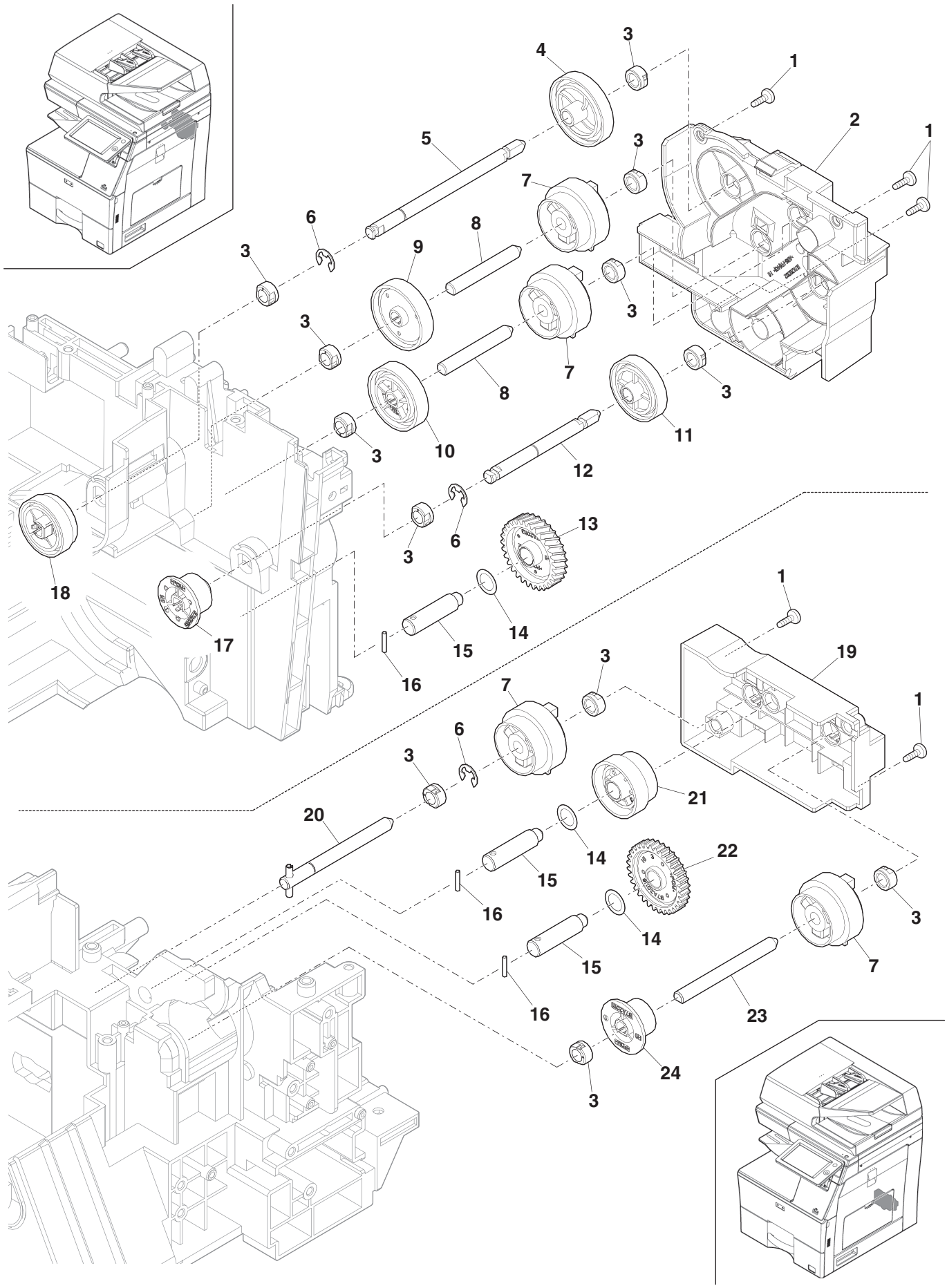

Update : 2018/Nov/9

【035】
電源部 (Power supply section)[IT Model]

NO.	PARTS CODE	PRICE RANK Ex.	PRICE RANK Ja.	DESCRIPTION		Inter-change	Reason for change	Effective time
1	PDUC-0037QSZZ	AY	FQ	DC duct	DCﾀﾞｸﾄ			
2	XHBS730P08000	AB	DD	Screw(3×8)	ﾋﾞｽ			
3	LPLTM0951QSZZ	AY	FQ	DC fixing plate	DC 取付板			
4	LSUPP0140FCPZ	AC	DJ	Supporter	ｻﾎﾟｰﾀｰ			
5	LSUPP0145FCPZ	AC	DD	PWB support(PS-6-01)	基板ｻﾎﾟｰﾄ			
6	RDENC0098QSPZ	BX	TF	Dc power supply pwb	DC 電源基板			
7 ♣	CPWBF0324QS51	BS	MW	HL PWB	HL 基板			
	CPWBF0324QS52	BR	MJ	HL PWB	HL 基板			
8	LPLTM0952QSZZ	AX	FQ	AC PWB fixing plate	AC 基板取付板			
9 ♣	CPWBF2242FC52	BF	GN	AC PWB	AC 基板			
	CPWBF2243FC52	BE	GN	AC PWB	AC 基板			
	CPWBF2244FC52	BF	GN	AC PWB	AC 基板			
10	XBPS730P08KS0	AB	DD	Screw(3×8KS)	ﾋﾞｽ			
11	TLABZ4868FCZ1	AB	DJ	Earth label	ｱｰｽﾗﾍﾞﾙ			
	♻ TLABZ1120QSZZ	AB	DJ	Earth label	ｱｰｽﾗﾍﾞﾙ	4	Productivity improvement	18/Apr
12	XEBS740P10000	AA	DD	Screw(4×10)	ﾋﾞｽ			
13	LX-BZ0088SSPZ	AH	DX	Screw(3×6)	ﾋﾞｽ			
14 ♣	CPWBN1810FCF8	BS	MJ	LIU PWB	LIU 基板			
	CPWBN2166FCE7	BP	LP	LIU PWB	LIU 基板			
	CPWBN2166FCE8	BR	LP	LIU PWB	LIU 基板			
15	CPWBX2164FCG1	BY	TF	FAX main PWB	FAX ﾒｲﾝ基板			
16	LPLTM0955QSZZ	AX	FQ	FAX PWB fixing plate	FAX 基板取付板			
17	XHBS740P08000	AA	DD	Screw(4×8)	ﾋﾞｽ			
18	XBPS740P25XS0	AB	DD	Screw(4×25)	ﾋﾞｽ			
⚠ 19 ♣	QACCDR418QCPZ	BE	GN	AC cord	AC ｺｰﾄﾞ			
⚠	QACCJR415QCPZ	BB	GD	AC cord	AC ｺｰﾄﾞ			
⚠	QACCLR62AQCPZ	BC	GJ	AC cord	AC ｺｰﾄﾞ			
20 ♣	LFiX-0016FCZZ	AD	DJ	AC cord fixture	AC ｺｰﾄﾞ押え			
	LFiX-0084FCZZ	AC	DD	AC cord fixture	AC ｺｰﾄﾞ押え			
21	LPLTM0956QSZZ	AX	FQ	AC cord fixing plate	AC ｺｰﾄﾞ取付板			
22	DUNT-1446QSZZ	BC	GJ	Inlet harness unit [include inlet harness]	ｲﾝﾚｯﾄﾊｰﾈｽﾕﾆｯﾄ			
23	XBPS740P06K00	AA	DD	Screw(4×6K)	ﾋﾞｽ			
24	CPWBX2237FCF1	CA	TV	FAX PWB	FAX 基板			
	♻ CPWBX2237FCF2	CA	TV	FAX PWB	FAX 基板	1	Improve performance	18/May
25	XHBS730P08KS0	AC	DD	Screw(3×8KS)	ﾋﾞｽ			

Matrix

No.7	HL 基板 (HL PWB)	
PARTS CODE	Americas Japan	Europe Australia Hong Kong Class B
CPWBF0324QS51	1st Lot	
CPWBF0324QS52		1st Lot

電源部 (Power supply section)[IT Model]

No.9	AC 基板 (AC PWB)		
PARTS CODE	Americas	Europe Australia Hong Kong Class B	Japan
CPWBF2242FC52			1st Lot
CPWBF2243FC52	1st Lot		
CPWBF2244FC52		1st Lot	

No.14	LIU 基板 (LIU PWB)		
PARTS CODE	Americas	Europe Hong Kong	Australia Class B
CPWBN1810FCF8			1st Lot
CPWBN2166FCE7	1st Lot		
CPWBN2166FCE8		1st Lot	

No.19	AC ｺｰﾄﾞ (AC cord)		
PARTS CODE	Americas	Australia	Japan
QACCDR418QCPZ	1st Lot		
QACCJR415QCPZ			1st Lot
QACCLR62AQCPZ		1st Lot	

No.20	AC ｺｰﾄﾞ押え (AC cord fixture)	
PARTS CODE	Americas	Japan
LFiX-0016FCZZ		1st Lot
LFiX-0084FCZZ	1st Lot	

【035】
電源部 (Power supply section)[IT Model]

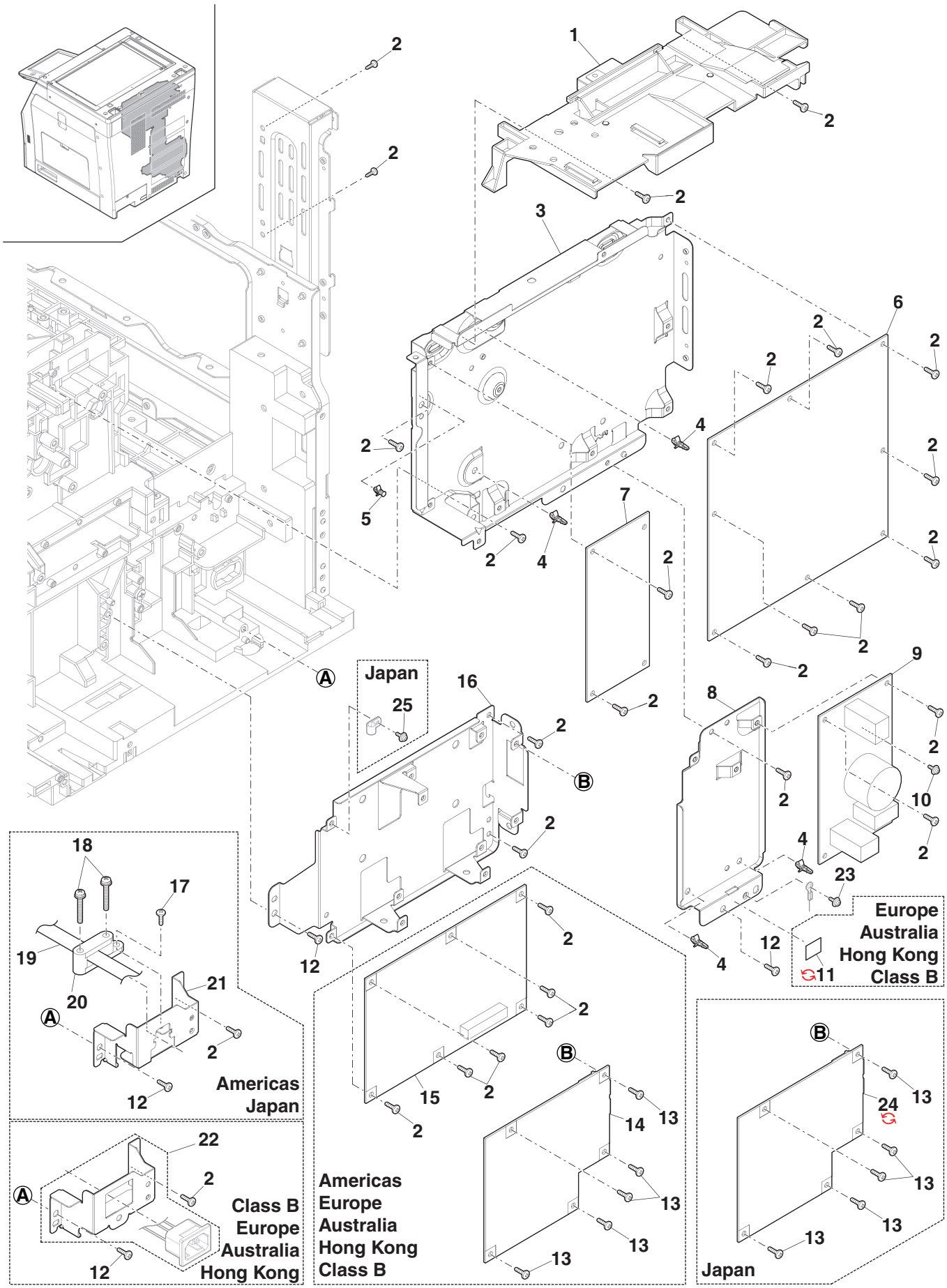

Update : 2018/Nov/9

【036】
電源部 (Power supply section)[MFP Model,PRINTER Model]

NO.	PARTS CODE	PRICE RANK Ex.	PRICE RANK Ja.	DESCRIPTION		Inter-change	Reason for change	Effective time
1	PDUC-0037QSZZ	AY	FQ	DC duct	DCﾀﾞｸﾄ			
2	XHBS730P08000	AB	DD	Screw(3×8)	ﾋﾞｽ			
3	LPLTM0951QSZZ	AY	FQ	DC fixing plate	DC 取付板			
4	LSUPP0140FCPZ	AC	DJ	Supporter	ｻﾎﾟｰﾀｰ			
5	LSUPP0145FCPZ	AC	DD	PWB support(PS-6-01)	基板ｻﾎﾟｰﾄ			
6	RDENC0098QSPZ	BX	TF	Dc power supply pwb	DC 電源基板			
7	CPWBF0324QS51	BS	MW	HL PWB	HL 基板			
♣	CPWBF0324QS52	BR	MJ	HL PWB	HL 基板			
8	LPLTM0952QSZZ	AX	FQ	AC PWB fixing plate	AC 基板取付板			
9	CPWBF2242FC52	BF	GN	AC PWB	AC 基板			
♣	CPWBF2243FC52	BE	GN	AC PWB	AC 基板			
	CPWBF2244FC52	BF	GN	AC PWB	AC 基板			
10	XBPS730P08KS0	AB	DD	Screw(3×8KS)	ﾋﾞｽ			
11	TLABZ4868FCZ1	AB	DJ	Earth label	ｱｰｽﾗﾍﾞﾙ			
	♻ TLABZ1120QSZZ	AB	DJ	Earth label	ｱｰｽﾗﾍﾞﾙ	4	Productivity improvement	18/Apr
12	XEBS740P10000	AA	DD	Screw(4×10)	ﾋﾞｽ			
13	XBPS740P06K00	AA	DD	Screw(4×6K)	ﾋﾞｽ			
14	LPLTM1045QSZZ	BA	FX	FAX fixing plate	FAX 取付板			
15	CPWBN0349QS51	BQ	LP	FAX PWB	FAX 基板			
♣	CPWBN0349QS52	BU	NU	FAX PWB	FAX 基板			
	CPWBN0349QS53	BQ	LP	FAX PWB	FAX 基板			
	CPWBN0349QS54	BV	RB	FAX PWB	FAX 基板			
16	DUNT-1446QSZZ	BC	GJ	Inlet harness unit	ｲﾝﾚｯﾄﾊｰﾈｽﾕﾆｯﾄ			
17	XHBS740P08000	AA	DD	Screw(4×8)	ﾋﾞｽ			
18	XBPS740P25XS0	AB	DD	Screw(4×25)	ﾋﾞｽ			
⚠ 19	QACCDR418QCPZ	BE	GN	AC cord	AC ｺｰﾄﾞ			
⚠ ♣	QACCJR415QCPZ	BB	GD	AC cord	AC ｺｰﾄﾞ			
⚠	QACCLR62AQCPZ	BC	GJ	AC cord	AC ｺｰﾄﾞ			
20	LFiX-0016FCZZ	AD	DJ	AC cord fixture	AC ｺｰﾄﾞ押え			
♣	LFiX-0084FCZZ	AC	DD	AC cord fixture	AC ｺｰﾄﾞ押え			
21	LPLTM0956QSZZ	AX	FQ	AC cord fixing plate	AC ｺｰﾄﾞ取付板			
22	CPWBN0350QS51	BE	GN	Ringer PWB	Ringer 基板			

Matrix

No.7	HL 基板 (HL PWB)	
PARTS CODE	Americas Japan	Europe Australia Asia
CPWBF0324QS51	1st Lot	
CPWBF0324QS52		1st Lot

No.9	AC 基板 (AC PWB)		
PARTS CODE	Americas	Europe Australia Asia	Japan
CPWBF2242FC52			1st Lot
CPWBF2243FC52	1st Lot		
CPWBF2244FC52		1st Lot	

Update : 2018/Nov/9

No.15	FAX 基板 (FAX PWB)			
PARTS CODE	Americas	Europe Australia Asia1 Asia2	Asia4	Japan
CPWBN0349QS51				1st Lot
CPWBN0349QS52	1st Lot			
CPWBN0349QS53		1st Lot		
CPWBN0349QS54			1st Lot	

No.19	AC ｺｰﾄﾞ (AC cord)		
PARTS CODE	Americas	Australia	Japan
QACCDR418QCPZ	1st Lot		
QACCJR415QCPZ			1st Lot
QACCLR62AQCPZ		1st Lot	

No.20	AC ｺｰﾄﾞ押え (AC cord fixture)	
PARTS CODE	Americas	Japan
LFiX-0016FCZZ		1st Lot
LFiX-0084FCZZ	1st Lot	

【036】
電源部 (Power supply section)[MFP Model,PRINTER Model]

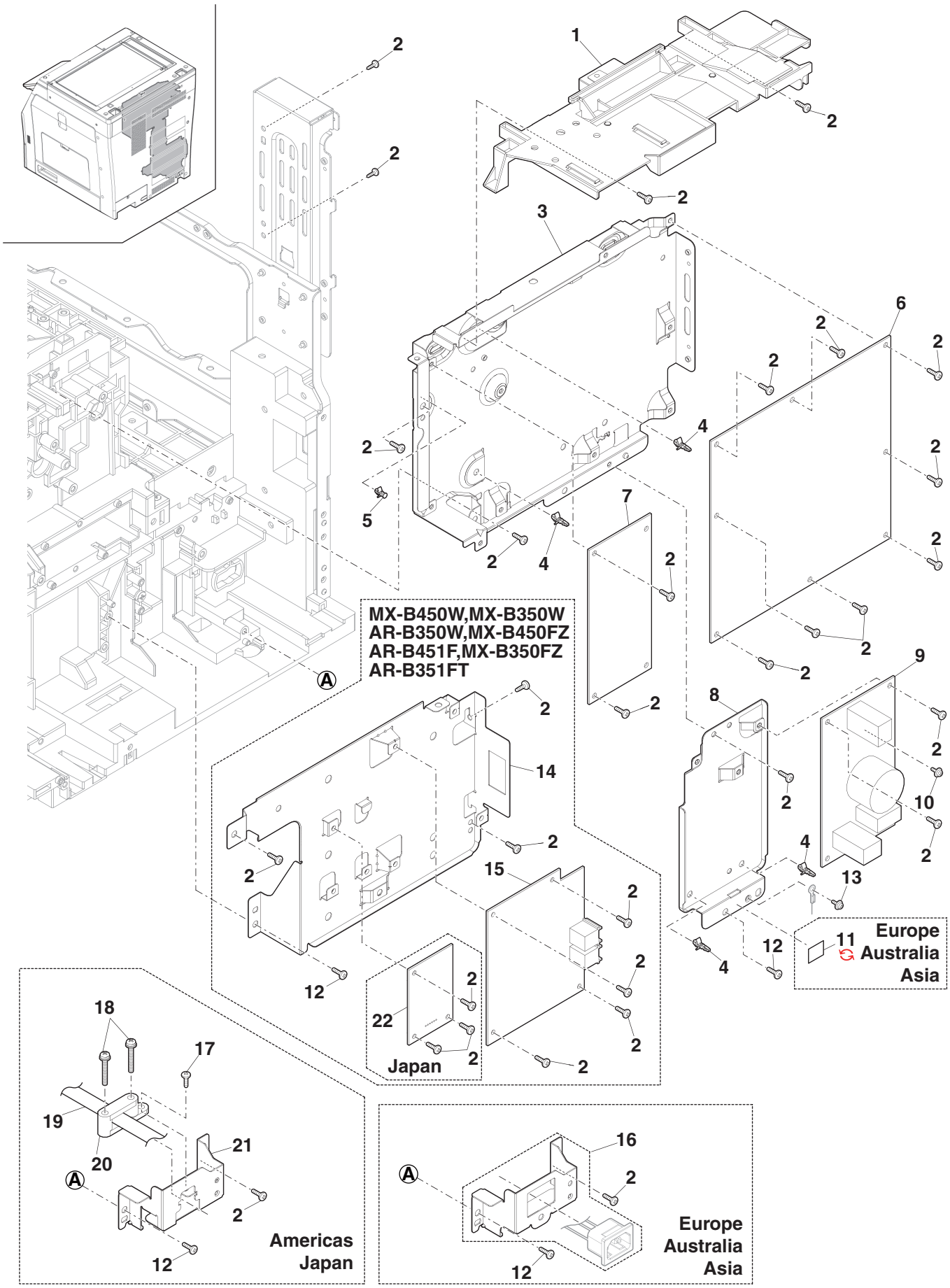

Update : 2018/Nov/9

【037】
ｺﾝﾄﾛｰﾙ基板部 (PWB section)[IT Model]

NO.	PARTS CODE	PRICE RANK Ex.	PRICE RANK Ja.	DESCRIPTION		Inter-change	Reason for change	Effective time
1	ＬＰＬＴＭ１００３ＱＳＺＺ	AX	FQ	HV PWB fixing plate	HV 基板取付板			
2	ＸＥＢＳ７４０Ｐ１００００	AA	DD	Screw(4×10)	ﾋﾞｽ			
3	ＸＨＢＳ７３０Ｐ０８０００	AB	DD	Screw(3×8)	ﾋﾞｽ			
4	ＲＤＥＮＵ００９７ＱＳＰＺ	BT	MW	Hv pwb	HV 基板			
5	ＣＰＷＢＸ０３２５ＱＳ５１	BW	RR	LSU control PWB	LSU ｺﾝﾄﾛｰﾙ基板			
6	ＸＥＢＳ７４０Ｐ１６０００	AB	DD	Screw(4×16)	ﾋﾞｽ			
7	ＤＵＮＴ－１３７５ＱＳＺＺ	BV	RB	LSU	LSU			
8	ＸＢＢＳ７３０Ｐ０６０００	AC	DD	Screw(3×6)	ﾋﾞｽ			
9 ♣	ＶＨｉ０ＭＦＰ２５００３Ｑ	BE	GN	SOC program ROM	SOC ﾌﾟﾛｸﾞﾗﾑ ROM			
	♻ ＶＨｉ０ＭＦＰ２５０３１Ｑ	BE	GN	SOC program ROM	SOC ﾌﾟﾛｸﾞﾗﾑ ROM	1	Productivity improvement	18/Jul RC
	ＶＨｉ０ＭＦＰ２５００４Ｑ	BE	GN	SOC program ROM	SOC ﾌﾟﾛｸﾞﾗﾑ ROM			
	♻ ＶＨｉ０ＭＦＰ２５０３２Ｑ	BE	GN	SOC program ROM	SOC ﾌﾟﾛｸﾞﾗﾑ ROM	1	Productivity improvement	18/Jul RC
	ＶＨｉ０ＭＦＰ２５００５Ｑ	BE	GN	SOC program ROM	SOC ﾌﾟﾛｸﾞﾗﾑ ROM			
	♻ ＶＨｉ０ＭＦＰ２５０３３Ｑ	BE	GN	SOC program ROM	SOC ﾌﾟﾛｸﾞﾗﾑ ROM	1	Productivity improvement	18/Jul RC
10	ＬＰＬＴＭ０９６２ＱＳＺＺ	AZ	FX	MFPC shield plate	MFPC ｼｰﾙﾄﾞﾌﾟﾚｰﾄ			
11	ＬＸ－ＢＺ１０５７ＦＣＺＺ	AC	DD	HDD fixing step screw(M3)	HDD 固定段ﾋﾞｽ			
12	ＰＤＭＰ－０００６ＦＣＺＺ	AE	DS	HDD damper	HDD ﾀﾞﾝﾊﾟｰ			
13	ＤＵＮＴ－９２３２ＦＣＰＺ	CC	ZZ	HDD(500GB 2.5Inch)	ﾊｰﾄﾞﾃﾞｨｽｸ			
14	ＬＰＬＴＭ０９５８ＱＳＺＺ	AX	FQ	HDD fixing plate	HDD 取付板			
15 ♣	ＣＰＷＢＸ０３３４ＱＳ５５	BZ	TR	PCU PWB	PCU 基板			
	ＣＰＷＢＸ０３３４ＱＳ５６	BZ	TR	PCU PWB	PCU 基板			
	ＣＰＷＢＸ０３３４ＱＳ５１	CA	TR	PCU PWB	PCU 基板			
	ＣＰＷＢＸ０３３４ＱＳ５２	CA	TR	PCU PWB	PCU 基板			
	ＣＰＷＢＸ０３３４ＱＳ６０	BU	NU	PCU PWB	PCU 基板			
16	ＶＨｉＢＲ２４Ｔ６４Ｗ－１	AG	DX	EEPROM	EEPROM			
17	ＬＰＬＴＭ０９５３ＱＳＺＺ	AZ	FX	PCU PWB fixing plate	PCU 基板取付板			
18	ＸＢＢＳ７２０Ｐ０４０００	AA	DD	Screw	ﾋﾞｽ			
19	ＶＨｉＢＲ２４２５６Ｗ－１	AK	EB	EEPROM(BR24T256-W)	EEPROM			
501 ♣♦	ＣＰＬＴＭ０９５４ＱＳ６１	CV	VZ	MFPC PWB(X0337QS61)(X0337QS51)	MFPC 基板			
	ＣＰＬＴＭ０９５４ＱＳ６３	CV	VZ	MFPC PWB(X0337QS63)(X0337QS53)	MFPC 基板			
	ＣＰＬＴＭ０９５４ＱＳ６５	CV	VZ	MFPC PWB(X0337QS65)(X0337QS55)	MFPC 基板			

Matrix

No.9	SOC ﾌﾟﾛｸﾞﾗﾑ ROM(SOC program ROM)		
PARTS CODE	Americas	Europe Australia Hong Kong Class B	Japan
ＶＨｉ０ＭＦＰ２５００３Ｑ	1st Lot		
♻ ＶＨｉ０ＭＦＰ２５０３１Ｑ	18/Jul RC		
ＶＨｉ０ＭＦＰ２５００４Ｑ		1st Lot	
♻ ＶＨｉ０ＭＦＰ２５０３２Ｑ		18/Jul RC	
ＶＨｉ０ＭＦＰ２５００５Ｑ			1st Lot
♻ ＶＨｉ０ＭＦＰ２５０３３Ｑ			18/Jul RC

【037】
ｺﾝﾄﾛｰﾙ基板部 (PWB section)[IT Model]

No.15	PCU 基板 (PCU PWB)				
PARTS CODE	MX-B455W MX-B455WZ			MX-B355W MX-B355WZ	
	Americas	Europe Australia Hong Kong Class B	Japan	Americas	Europe Australia Hong Kong Class B
CPWBX0334QS51				1st Lot	
CPWBX0334QS52	1st Lot				
CPWBX0334QS55					1st Lot
CPWBX0334QS56		1st Lot			
CPWBX0334QS60			1st Lot		

No.501	MFPC 基板 (MFPC PWB)		
PARTS CODE	MX-B455W MX-B455WZ		MX-B355W MX-B355WZ
	Americas Europe Australia Hong Kong Class B	Japan	Americas Europe Australia Hong Kong Class B
CPLTM0954QS61		1st Lot	
CPLTM0954QS63			1st Lot
CPLTM0954QS65	1st Lot		

【037】
ｺﾝﾄﾛｰﾙ基板部 (PWB section)[IT Model]

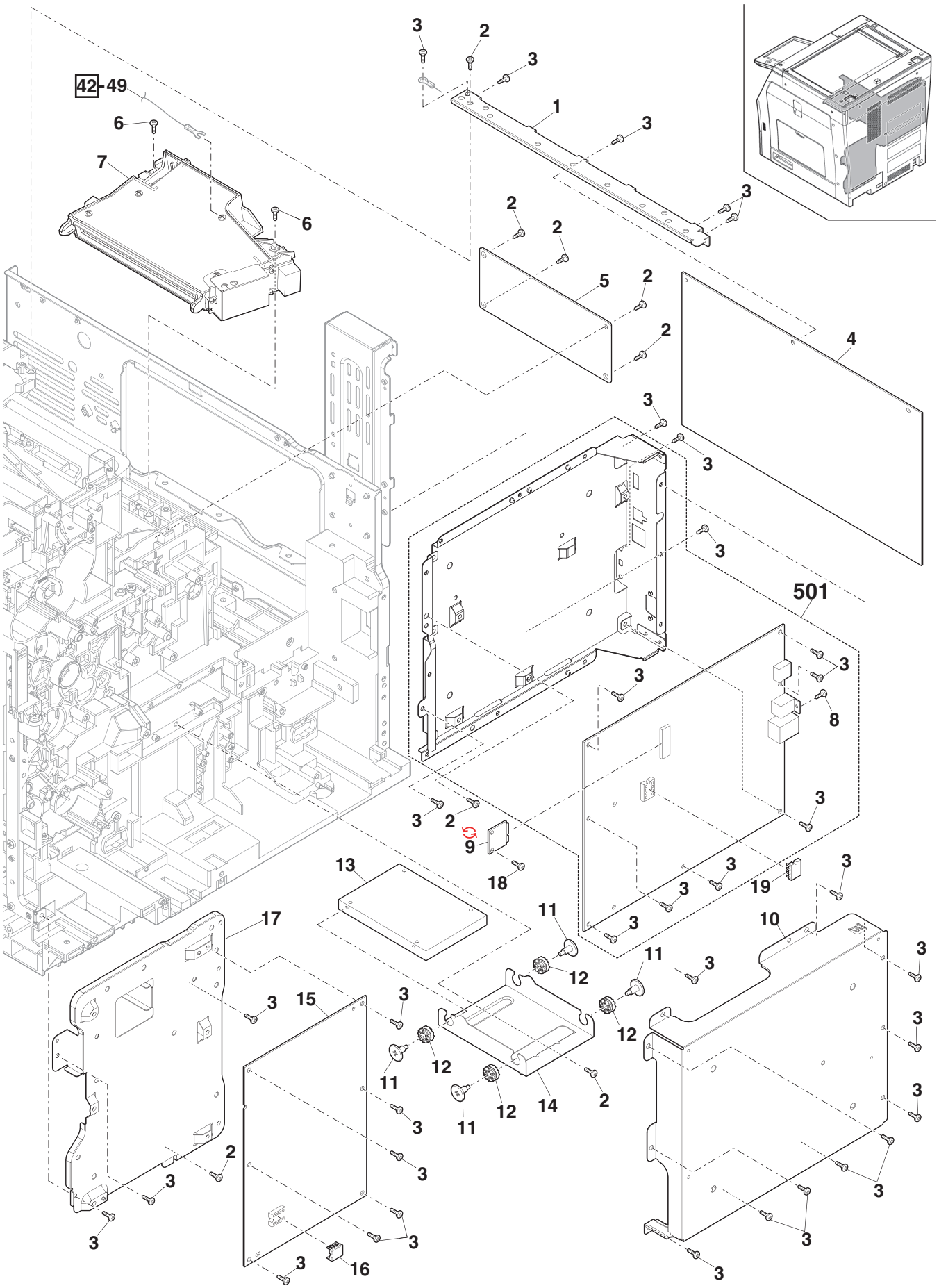

Update : 2018/Nov/9

【038】

ｺﾝﾄﾛｰﾙ基板部 (PWB section)[MFP Model,PRINTER Model]

NO.	PARTS CODE	PRICE RANK Ex.	PRICE RANK Ja.	DESCRIPTION		Inter-change	Reason for change	Effective time
1	ＬＰＬＴＭ１００３ＱＳＺＺ	AX	FQ	HV PWB fixing plate	HV 基板取付板			
2	ＸＥＢＳ７４０Ｐ１００００	AA	DD	Screw(4×10)	ﾋﾞｽ			
3	ＸＨＢＳ７３０Ｐ０８０００	AB	DD	Screw(3×8)	ﾋﾞｽ			
4	ＲＤＥＮＵ００９７ＱＳＰＺ	BT	MW	Hv pwb	HV 基板			
5	ＸＢＢＳ７３０Ｐ０６０００	AC	DD	Screw(3×6)	ﾋﾞｽ			
6	ＸＥＢＳ７４０Ｐ１６０００	AB	DD	Screw(4×16)	ﾋﾞｽ			
7	ＤＵＮＴ－１３７５ＱＳＺＺ	BV	RB	LSU	LSU			
8	ＸＢＢＳ７２０Ｐ０４０００	AA	DD	Screw	ﾋﾞｽ			
9 ♣	ＶＨｉ０ＭＦＰ１５００３Ｑ	BG	GX	program ROM	ﾌﾟﾛｸﾞﾗﾑ ROM			
	ＶＨｉ０ＭＦＰ１５００４Ｑ	BG	GX	program ROM	ﾌﾟﾛｸﾞﾗﾑ ROM			
	ＶＨｉ０ＭＦＰ１５００５Ｑ	BG	GX	program ROM	ﾌﾟﾛｸﾞﾗﾑ ROM			
	ＶＨｉ０ＭＦＰ１５００６Ｑ	BG	GX	program ROM	ﾌﾟﾛｸﾞﾗﾑ ROM			
	ＶＨｉ０ＭＦＰ１５００７Ｑ	BG	GX	program ROM	ﾌﾟﾛｸﾞﾗﾑ ROM			
	ＶＨｉ０ＭＦＰ１５００８Ｑ	BG	GX	program ROM	ﾌﾟﾛｸﾞﾗﾑ ROM			
	ＶＨｉ０ＭＦＰ１５００９Ｑ	BG	GX	program ROM	ﾌﾟﾛｸﾞﾗﾑ ROM			
10	ＬＰＬＴＭ１０４４ＱＳＺＺ	BB	GD	MFPC cover	MFPC ｶﾊﾞｰ			
11	ＸＥＢＳ７３０Ｐ１００００	AC	DD	Screw(3×10)	ﾋﾞｽ			
12	ＬＰＬＴＭ０９５３ＱＳＺＺ	AZ	FX	PCU PWB fixing plate	PCU 基板取付板			
13	ＰＴＰＥ－０１２２ＱＳＺＺ	AU	FG	Tape	ﾃｰﾌﾟ			
14	ＲＣＯＲＦ００３４ＱＳＺＺ	AF	DS	Core(GSSC-40-12)	ｺｱ			
501 ♣◆	ＣＰＬＴＭ１０４３ＱＳ６１	CG	UM	MFPC PWB(X0351QS51)	MFPC 基板			
	ＣＰＬＴＭ１０４３ＱＳ６２	CG	UM	MFPC PWB(X0351QS52)	MFPC 基板			
	ＣＰＬＴＭ１０４３ＱＳ６３	CG	UM	MFPC PWB(X0351QS53)	MFPC 基板			
	ＣＰＬＴＭ１０４３ＱＳ６４	CG	UM	MFPC PWB(X0351QS54)	MFPC 基板			
	ＣＰＬＴＭ１０４３ＱＳ６５	CG	UM	MFPC PWB(X0351QS55)	MFPC 基板			
	ＣＰＬＴＭ１０４３ＱＳ６６	CG	UM	MFPC PWB(X0351QS56)	MFPC 基板			
	ＣＰＬＴＭ１０４３ＱＳ６７	CG	UM	MFPC PWB(X0351QS57)	MFPC 基板			
	ＣＰＬＴＭ１０４３ＱＳ６８	CG	UM	MFPC PWB(X0351QS58)	MFPC 基板			
	ＣＰＬＴＭ１０４３ＱＳ６９	CG	UM	MFPC PWB(X0351QS59)	MFPC 基板			
	ＣＰＬＴＭ１０４３ＱＳ７０	CG	UM	MFPC PWB(X0351QS60)	MFPC 基板			

Matrix

No.9	ﾌﾟﾛｸﾞﾗﾑ ROM(program ROM)									
PARTS CODE	MX-B450W MX-B350W AR-B350W				MX-B450FZ AR-B451F	MX-B350FZ AR-B351FT MX-B450Z AR-B451T MX-B350Z AR-B351T	MX-B450P MX-B350P MX-B350PZ			MX-B451PZ AR-B453PT MX-B351PZ AR-B353PT
	Americas	Europe	Australia Hong Kong Asia2	Japan	Thailand Asia2 Asia4	Asia	Americas	Europe	Australia Hong Kong	Thailand Asia2 Asia4 Asia5 Asia6 Asia7
ＶＨｉ０ＭＦＰ１５００３Ｑ		1st Lot			1st Lot					
ＶＨｉ０ＭＦＰ１５００４Ｑ								1st Lot		
ＶＨｉ０ＭＦＰ１５００５Ｑ	1st Lot									
ＶＨｉ０ＭＦＰ１５００６Ｑ							1st Lot			
ＶＨｉ０ＭＦＰ１５００７Ｑ				1st Lot						
ＶＨｉ０ＭＦＰ１５００８Ｑ			1st Lot			1st Lot				
ＶＨｉ０ＭＦＰ１５００９Ｑ									1st Lot	1st Lot

No.501	MFPC 基板 (MFPC PWB)									
PARTS CODE	MX-B450W	MX-B350W AR-B350W	MX-B450FZ AR-B451F	MX-B350FZ AR-B351FT	MX-B450Z AR-B451T	MX-B350Z AR-B351T	MX-B450P	MX-B350P MX-B350PZ	MX-B451PZ AR-B453PT	MX-B351PZ AR-B353PT
CPLTM1043QS61	1st Lot									
CPLTM1043QS62			1st Lot							
CPLTM1043QS63					1st Lot					
CPLTM1043QS64		1st Lot								
CPLTM1043QS65				1st Lot						
CPLTM1043QS66						1st Lot				
CPLTM1043QS67							1st Lot			
CPLTM1043QS68									1st Lot	
CPLTM1043QS69								1st Lot		
CPLTM1043QS70										1st Lot

【038】
ｺﾝﾄﾛｰﾙ基板部 (PWB section)[MFP Model,PRINTER Model]

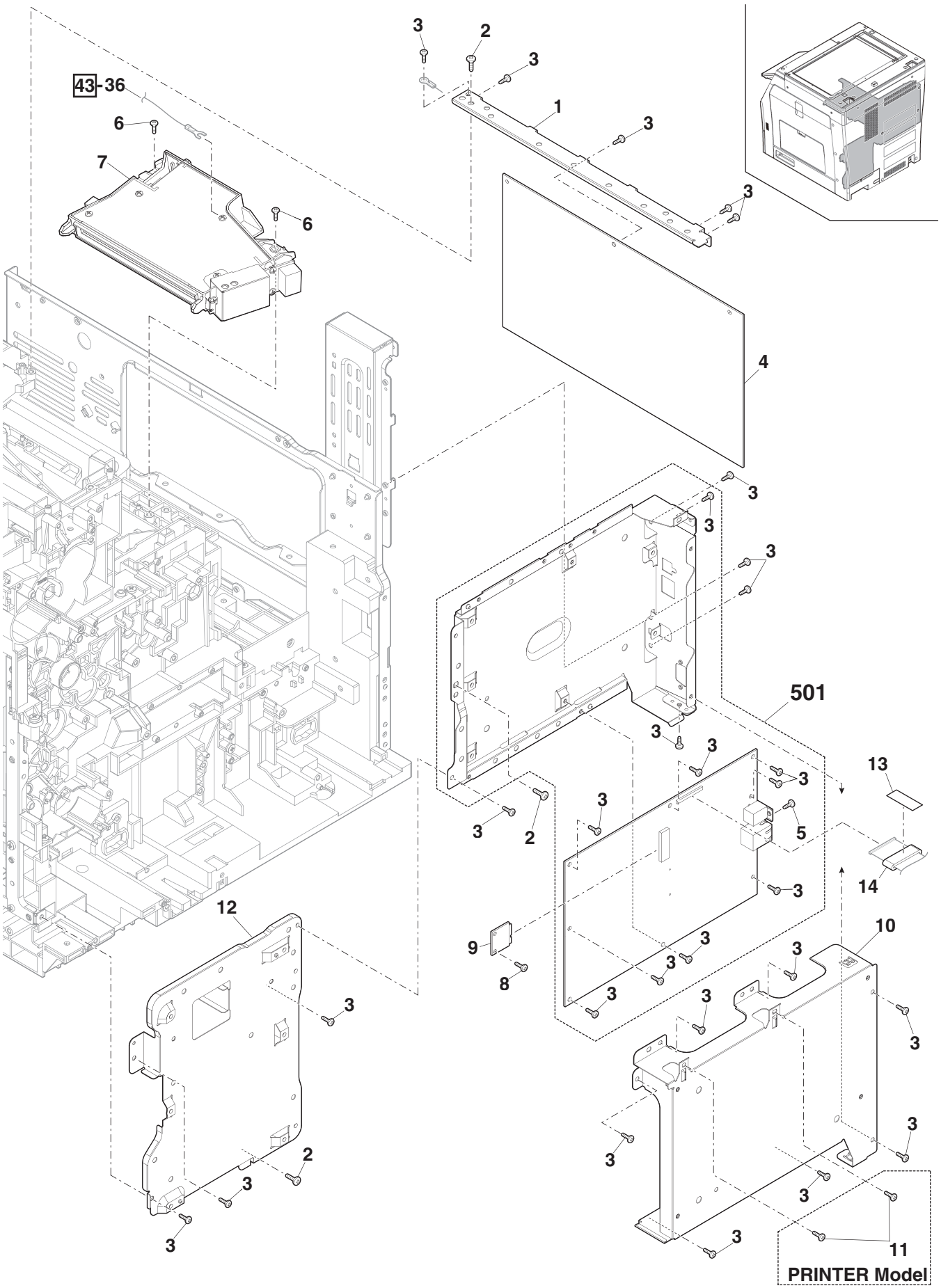

Update : 2018/Nov/9

【039】
ﾌﾚｰﾑ部 1 (Frame section 1)

NO.	PARTS CODE	PRICE RANK Ex.	PRICE RANK Ja.	DESCRIPTION		Inter-change	Reason for change	Effective time
1	XEBS740P10000	AA	DD	Screw(4×10)	ﾋﾞｽ			
2	LPLTM0961QSZZ	AR	EQ	Size detection fixing plate	ｻｲｽﾞ検知取付板			
3	QSW-P9991QCPZ	AR	EQ	Switch	ｽｲｯﾁ			
4	MLŌKZ0018FCZZ	AC	DJ	U cassette lock	U ｶｾｯﾄﾛｯｸ			
5	PGUMS0340FCZZ	AC	DJ	Base gum	ﾍﾞｰｽｺﾞﾑ			
6	PCŌVP0273QSZZ	AY	FQ	Handle cover	取手ｶﾊﾞｰ			
7	LPLTM8062FCZZ	AD	DJ	M3 plate	M3 ﾌﾟﾚｰﾄ			
8	MHNG-0040QSZZ	AQ	EQ	Right door hinge	右ﾄﾞｱﾋﾝｼﾞ			
9	QEARP0035QSZZ	AX	FQ	PF ground plate	PF ｱｰｽ板			
10	PGiDM0293QSZZ	AZ	FX	Vertical transport PG	縦搬送 PG			
11	XHBS730P08000	AB	DD	Screw(3×8)	ﾋﾞｽ			
12	PGiDM0294QSZZ	AX	FQ	Cassette guide L	ｶｾｯﾄｶﾞｲﾄﾞ L			
13	LHLDZ0329QSZZ	AZ	FX	PE actuator holder	PE ｱｸﾁｭｴｰﾀｰﾎﾙﾀﾞｰ			
14	VHPSG2A241+-1	AG	DX	Photo sensor(SG2A241)	ﾌｫﾄｾﾝｻｰ			
15	MLEVP0218QSZZ	AM	GN	PE actuator	PE ｱｸﾁｭｴｰﾀｰ			
16	PSHEP1022QSZZ	AQ	EQ	DV guide sheet	DV ｶﾞｲﾄﾞｼｰﾄ			
17	LX-BZ0342FCPZ	AB	DD	Step screw	段ﾋﾞｽ			
18	DUNT-1404QSZZ	AX	FQ	Speaker	ｽﾋﾟｰｶｰ			
♣	DUNT-1404QS11	AY	FQ	Speaker	ｽﾋﾟｰｶｰ			
19	XEBS730P08000	AC	DD	Screw(3×8)	ﾋﾞｽ			
20	RDTCH0252FCZZ	AU	EZ	Temperature-humidity sensor	温湿度ｾﾝｻｰ			
21	PGiDM0295QSZZ	AY	FQ	Linking paper guide	ﾘﾝｸﾍﾟｰﾊﾟｰｶﾞｲﾄﾞ			
22	QSW-C9295QCPZ	AL	EB	Main switch	ﾒｲﾝｽｲｯﾁ			
23	NFANP0029QSPZ	AY	FQ	Fan(80×25)	ﾌｧﾝ			
24	LHLDZ0333QSZZ	AY	FQ	Harness holder	ﾊｰﾈｽﾎﾙﾀﾞｰ			
25	PSHEP1064QSZZ	AU	FG	Corner protect sheet	ｺｰﾅｰ保護ｼｰﾄ			

Matrix

No.18	ｽﾋﾟｰｶｰ (Speaker)	
PARTS CODE	MX-B455W MX-B455WZ MX-B355W MX-B355WZ	MX-B450W MX-B350W AR-B350W MX-B450FZ AR-B451F MX-B350FZ AR-B351FT
DUNT-1404QS11		1st Lot
DUNT-1404QSZZ	1st Lot	

【039】
ﾌﾚｰﾑ部 1 (Frame section 1)

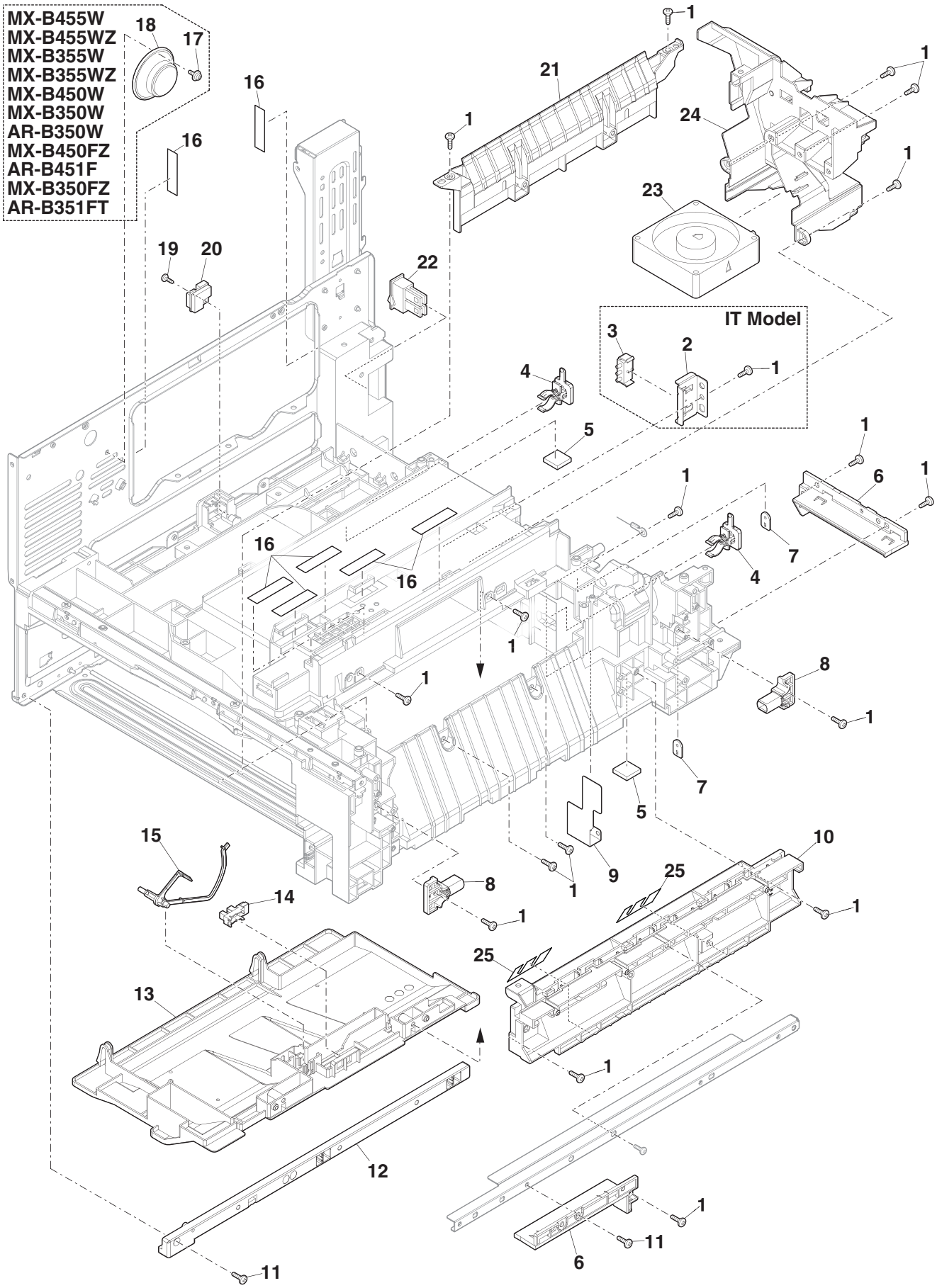

Update : 2018/Nov/9

【040】
ﾌﾚｰﾑ部 2 (Frame section 2)

NO.	PARTS CODE	PRICE RANK Ex.	PRICE RANK Ja.	DESCRIPTION		Inter-change	Reason for change	Effective time
1	XEBS740P10000	AA	DD	Screw(4×10)	ﾋﾞｽ			
2	LX-BZ1315FCZZ	AB	DJ	Screw(2.6×2.5)	ﾋﾞｽ			
3	LPLTM0949QSZZ	AQ	EQ	TN motor plate	TN ﾓｰﾀｰﾌﾟﾚｰﾄ			
4	XEBS730P10000	AC	DD	Screw(3×10)	ﾋﾞｽ			
5	LSTPP0435FCZZ	AC	DD	Gear stopper	ｷﾞｱｽﾄｯﾊﾟｰ			
6	NGERW1445FCZ5	AC	DJ	Worm gear	ｳｫｰﾑｷﾞｱ			
7	CMŌTV1073FC53	AX	FQ	Toner motor unit	ﾄﾅｰﾓｰﾀｰﾕﾆｯﾄ			
8	PCŌVP0249QSZZ	AX	FQ	TN drive cover A	TN 駆動ｶﾊﾞｰ A			
9	NGERH0469QSZZ	AQ	EQ	TN worm wheel gear	TN ｳｫｰﾑﾎｲｰﾙｷﾞｱ			
10	NGERH0470QSZZ	AQ	EQ	TN reduction gear B	TN 減速ｷﾞｱ B			
11	NGERH0471QSZZ	AQ	EQ	TN reduction gear A	TN 減速ｷﾞｱ A			
12	VHPSG2A241+-1	AG	DX	Photo sensor(SG2A241)	ﾌｫﾄｾﾝｻｰ			
13	NGERH0472QSZZ	AY	FQ	TN input gear A	TN 入力ｷﾞｱ A			
14	NGERH0473QSZZ	AQ	EQ	TN idle gear	TN ｱｲﾄﾞﾙｷﾞｱ			
15	NGERH0474QSZZ	AQ	EQ	TN input gear B	TN 入力ｷﾞｱ B			
16	PCŌVP0250QSZZ	AX	FQ	TN drive cover B	TN 駆動ｶﾊﾞｰ B			
17	MSPRC4555FHZZ	AQ	EQ	TN coupling spring	TN ｶｯﾌﾟﾘﾝｸﾞｽﾌﾟﾘﾝｸﾞ			
18	NCPL-0037QSZZ	AQ	EQ	Tn drive coupling	TN 駆動ｶｯﾌﾟﾘﾝｸﾞ			
19	MLŌKZ0010QSZZ	AQ	EQ	TN lock	TN ﾛｯｸ			
20	PMLT-0328QSZZ	AN	EQ	Damper cushion	消音ﾓﾙﾄ			
21	LHLDZ0335QSZZ	AX	FQ	TC unit positioning holder R	TC ﾕﾆｯﾄ位置決めﾎﾙﾀﾞｰ			
22	PMLT-0304QSZZ	AM	EG	DV exhaust port cushion B	DV 排気口ﾓﾙﾄ B			
23	PMLT-0305QSZZ	AM	EG	Process exhaust port cushion	ﾌﾟﾛｾｽ排気口ﾓﾙﾄ			
24	PMLT-0303QSZZ	AM	EG	DV exhaust port cushion A	DV 排気口ﾓﾙﾄ A			
25	LHLDZ0334QSZZ	AX	FQ	TC unit positioning holder F	TC ﾕﾆｯﾄ位置決めﾎﾙﾀﾞｰ			
26	LPLTM6022FCZZ	AC	DJ	M4 plate(M4)	M4 ﾌﾟﾚｰﾄ			
27	PMLT-0311QSZZ	AN	EQ	DV intake cushion	DV 吸気ﾓﾙﾄ			
28	PSHEP1004QSZZ	AQ	EQ	LSU duct sheet	LSU ﾀﾞｸﾄｼｰﾄ			
29	PSHEP1002QSZZ	AQ	EQ	Cooling duct sheet	冷却ﾀﾞｸﾄｼｰﾄ			
30	PSHEP1003QSZZ	AR	EQ	Center frame sheet	ｾﾝﾀｰﾌﾚｰﾑｼｰﾄ			
31	PSHEP1005QSZZ	AQ	EQ	Fuser duct sheet	定着ﾀﾞｸﾄｼｰﾄ			
32	PDUC-0042QSZZ	AY	FQ	Fuser duct upper	定着ﾀﾞｸﾄ上			
33	LPLTM1002QSZZ	AX	FQ	Fusing duct plate	定着ﾀﾞｸﾄ板			
34	LPLTM0950QSZZ	AR	EQ	Fusing fixing plate R	定着取付ﾌﾟﾚｰﾄ R			
35	PCŌVP0253QSZZ	AX	FQ	HV contact cover	HV 接点ｶﾊﾞｰ			
36	XEBS730P08000	AC	DD	Screw(3×8)	ﾋﾞｽ			
37	XBPS730P08KS0	AB	DD	Screw(3×8KS)	ﾋﾞｽ			
38	LX-NZ0111FCZZ	AA	DD	Plate nut(M3)	板ﾅｯﾄ			
39	MSPRC0684QSZZ	AQ	EQ	HV contact spring	HV 接点ｽﾌﾟﾘﾝｸﾞ			
40	CPWBF2236FC52	AQ	EQ	DL PWB	DL 基板			
41	MSPRC0685QSZZ	AQ	EQ	TC contact spring	TC 接点ｽﾌﾟﾘﾝｸﾞ			
42	LHLDZ0302QSZZ	AX	FQ	HV contact holder	HV 接点ﾎﾙﾀﾞｰ			
43	PDUC-0038QSZZ	AY	FQ	Rear exhaust duct	後排気ﾀﾞｸﾄ			
44	NFANP0029QSPZ	AY	FQ	Fan(80×25)	ﾌｧﾝ			
45	PCŌVP0267QSZZ	AY	FQ	Rear duct cover	ﾘｱﾀﾞｸﾄｶﾊﾞｰ			
46	PFiLZ0045QSZZ	AY	FQ	UFP filter	UFP ﾌｨﾙﾀｰ			
47	PSPŌ-0044QSZZ	AN	EQ	Gap sponge	隙間ｽﾎﾟﾝｼﾞ			
501	CCŌVP0249QS51	BE	GN	TN drive unit	TN 駆動ﾕﾆｯﾄ			

Update : 2018/Nov/9

【040】
ﾌﾚｰﾑ部 2 (Frame section 2)

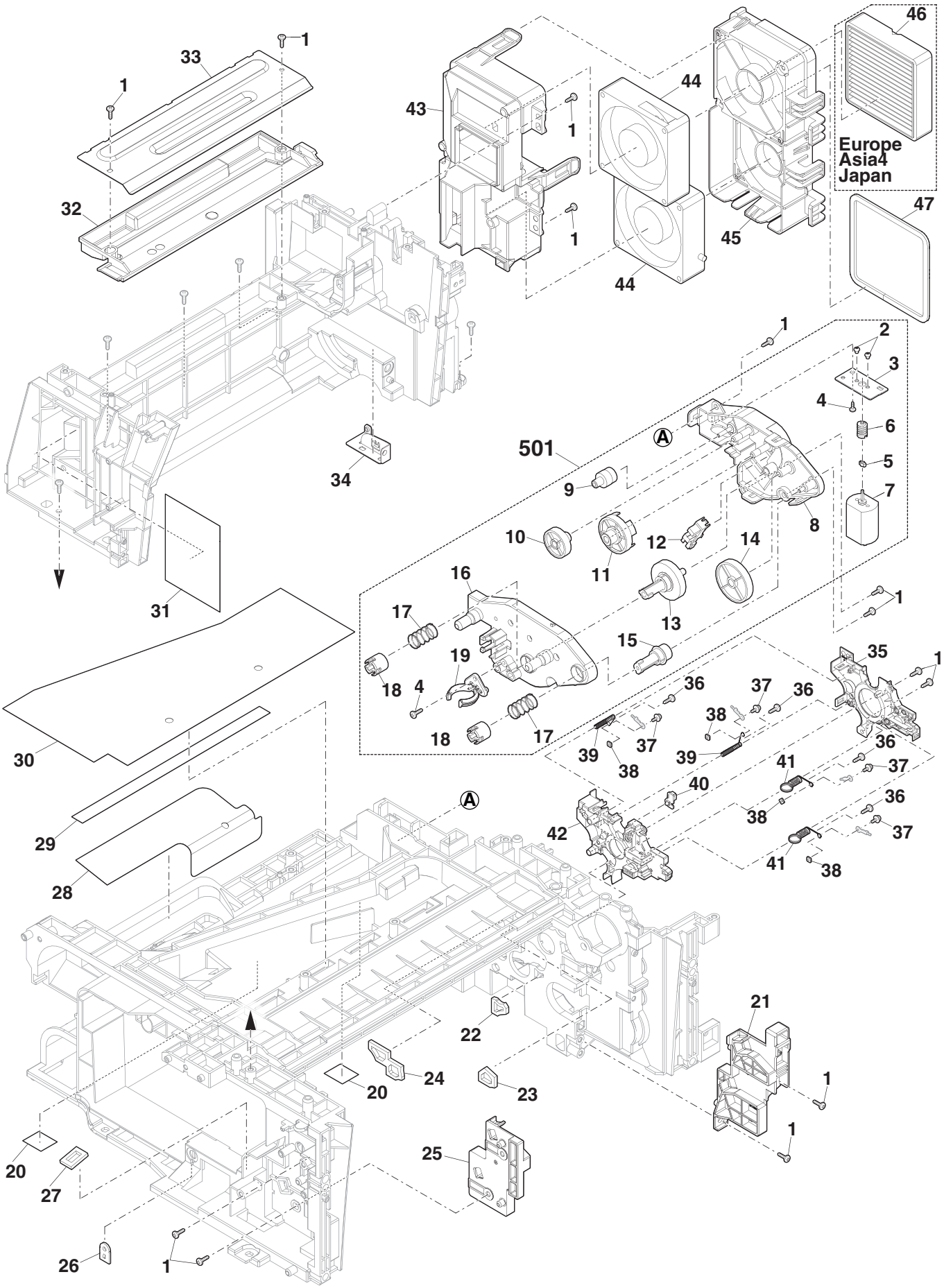

Update : 2018/Nov/9

【041】
ﾌﾚｰﾑ部 3 (Frame section 3)

NO.	PARTS CODE	PRICE RANK Ex.	PRICE RANK Ja.	DESCRIPTION		Inter-change	Reason for change	Effective time
1	ＰＴＰＥＨ０１１１ＱＳＺＺ	AQ	EQ	LCD FFC fixing tape	LCD FFC 取付ﾃｰﾌﾟ			
2	ＬＰＬＴＭ８０６２ＦＣＺＺ	AD	DJ	M3 plate	M3 ﾌﾟﾚｰﾄ			
3	ＸＨＢＳ７３０Ｐ０８０００	AB	DD	Screw(3×8)	ﾋﾞｽ			
4	ＰＤＵＣ－００４１ＱＳＺＺ	AX	FQ	Cooling fan duct	冷却 FAN ﾀﾞｸﾄ			
5	ＸＥＢＳ７４０Ｐ１００００	AA	DD	Screw(4×10)	ﾋﾞｽ			
6	ＰＭＬＴ－０３１３ＱＳＺＺ	AN	EQ	Cooling fan cushion	冷却 FAN ﾓﾙﾄ			
7	ＮＦＡＮＳ００３２ＱＳＰＺ	AY	FQ	Fan(51×25)	ﾌｧﾝ			
8	ＸＥＢＳ７４０Ｐ３５０００	AC	DD	Screw(4×35)	ﾋﾞｽ			
9	ＸＥＢＳ７３０Ｐ０８０００	AC	DD	Screw(3×8)	ﾋﾞｽ			
10	ＣＰＷＢＮ２０８５ＦＣ６１	AS	EZ	USB connector PWB(front USB)	USB ｺﾈｸﾀｰ基板			
11	ＰＣＯＶＰ０２５５ＱＳＺＺ	AY	FQ	Inner cover right	ｲﾝﾅｰｶﾊﾞｰ右			
13	ＤＵＮＴ－８９６２ＦＣＰ１	BF	GN	USB wireless LAN	USB 無線 LAN			
14	ＬＨＬＤＺ０３０４ＱＳＺＺ	AX	FQ	Wireless lan holder	無線 LAN ﾎﾙﾀﾞｰ			
15	ＣＰＷＢＮ２０８５ＦＣ６２	AS	EZ	USB connector PWB(wireless LAN)	USB ｺﾈｸﾀｰ基板			
16	ＰＣＯＶＰ０２５２ＱＳＺＺ	AZ	FX	Front duct cover	前ﾀﾞｸﾄｶﾊﾞｰ			
17	ＬＨＬＤＺ０３０３ＱＳＺＺ	AX	FQ	Door switch holder	ﾄﾞｱｽｲｯﾁﾎﾙﾀﾞｰ			
18	ＭＬＥＶＰ０２０４ＱＳＺＺ	AY	FQ	Door switch detection lever	ﾄﾞｱｽｲｯﾁ検知ﾚﾊﾞｰ			
19	ＭＡＲＭＰ００９４ＱＳＺＺ	AY	FQ	Door switch arm	ﾄﾞｱｽｲｯﾁｱｰﾑ			
20	ＭＳＰＲＣ０６８６ＱＳＺＺ	AQ	EQ	Door switch lever spring	ﾄﾞｱｽｲｯﾁﾚﾊﾞｰｽﾌﾟﾘﾝｸﾞ			
21	ＤＵＮＴ－１４０８ＱＳＺＺ	AX	FQ	Front interlock switch unit	前ｲﾝﾀｰﾛｯｸｽｲｯﾁﾕﾆｯﾄ			
22	ＮＦＡＮＰ０１３８ＦＣＰＺ	BA	FX	Fan(08025SS-24P-AM-D2)	ﾌｧﾝ			
23	ＬＲＡＬＰ００２９ＱＳＺ１	AX	FQ	Process rail	ﾌﾟﾛｾｽﾚｰﾙ			
♣	ＬＲＡＬＰ００２９ＱＳＺＺ	BB	GD	Process rail	ﾌﾟﾛｾｽﾚｰﾙ			
24	ＰＦｉＬＺ００４７ＱＳＺＺ	AX	FQ	Intake filter	吸気ﾌｨﾙﾀｰ			
25	ＬＤＡｉＺ００８４ＱＳＺＺ	BK	HG	Operation base plate	操作台板			
26	ＧＣＯＶ－０１５９ＱＳＺＺ	AQ	EQ	Hinge cover	ﾋﾝｼﾞ下ｶﾊﾞｰ			
27	ＸＨＢＳ７３０Ｐ０６０００	AC	DD	Screw(3×6)	ﾋﾞｽ			
28	ＬＰＬＴＭ０９６７ＱＳＺＺ	AX	FQ	Panel reinforcement plate	ﾊﾟﾈﾙ補強板			
29	ＮＳＦＴＺ０２２６ＱＳＺＺ	AR	EQ	Hinge shaft	ﾋﾝｼﾞｼｬﾌﾄ			
♣	ＮＳＦＴＺ０３１５ＱＳＺＺ	AX	FQ	Hinge shaft	ﾋﾝｼﾞｼｬﾌﾄ			
30	ＬＰＬＴＭ０９６６ＱＳＺＺ	AR	EQ	Machine hinge plate	ﾏｼﾝﾋﾝｼﾞﾌﾟﾚｰﾄ			
♣	ＬＰＬＴＭ０９６６ＱＳＺ１	AW	FG	Machine hinge plate	ﾏｼﾝﾋﾝｼﾞﾌﾟﾚｰﾄ			
31	ＸＷＨＵＷ６２－０５１２０	AW	FG	Washer	ﾎﾟﾘｽﾗｲﾀﾞｰ			
32	ＬＰＬＴＭ０９６５ＱＳＺＺ	AQ	EQ	Panel hinge plate	ﾊﾟﾈﾙﾋﾝｼﾞﾌﾟﾚｰﾄ			
33	ＬＸ－ＷＺ０４６４ＦＣＺＺ	AC	DD	Plate spring(φ6×t0.7)	皿ﾊﾞﾈ			
34	ＸＢＰＳ７４０Ｐ１０ＫＳ０	AC	DD	Screw(4×10)	ﾋﾞｽ			
35	ＬＰＬＴＭ１００１ＱＳＺＺ	AX	FQ	Fusing fixing plate F	定着取付ﾌﾟﾚｰﾄ F			
36	ＸＥＢＳ７３０Ｐ１００００	AC	DD	Screw(3×10)	ﾋﾞｽ			
37	ＸＲＥＳＰ５０－０６０００	AA	DD	E ring(E5)	E ﾘﾝｸﾞ			
38	ＰＣＯＶＰ０２５６ＱＳＺＺ	AX	FQ	Fuser connector cover	定着ｺﾈｸﾀｰｶﾊﾞｰ			
39	ＬＸ－ＢＺ０１１５ＱＳＺＺ	AF	EZ	Screw	ﾋﾞｽ			
40	ＬＰＬＴＭ１１０５ＱＳＺＺ	AW	FG	Hinge washer	ﾋﾝｼﾞﾜｯｼｬｰ			

Update : 2018/Nov/9

【041】
ﾌﾚｰﾑ部 3 (Frame section 3)

Matrix

No.23	ﾌﾟﾛｾｽﾚｰﾙ (Process rail)			
PARTS CODE	MX-B455W MX-B455WZ MX-B355W MX-B355WZ	MX-B450W MX-B350W AR-B350W		MX-B450FZ AR-B451F MX-B350FZ AR-B351FT MX-B450Z AR-B451T MX-B350Z AR-B351T MX-B450P MX-B350P MX-B350PZ MX-B451PZ AR-B453PT MX-B351PZ AR-B353PT
	Americas Australia Europe Hong Kong Japan Class B	Americas Australia Europe Hong Kong Asia2	Japan	Americas Australia Asia Europe
LRALP0029QSZ1			1st Lot	
LRALP0029QSZZ	1st Lot	1st Lot		1st Lot

No.29	ﾋﾝｼﾞｼｬﾌﾄ (Hinge shaft)	
PARTS CODE	Americas Europe Australia Hong Kong Japan	Class B
NSFTZ0226QSZZ	1st Lot	
NSFTZ0315QSZZ		1st Lot

No.30	ﾏｼﾝﾋﾝｼﾞﾌﾟﾚｰﾄ (Machine hinge plate)	
PARTS CODE	Americas Europe Australia Hong Kong Japan	Class B
LPLTM0966QSZ1		1st Lot
LPLTM0966QSZZ	1st Lot	

【041】
ﾌﾚｰﾑ部 3 (Frame section 3)

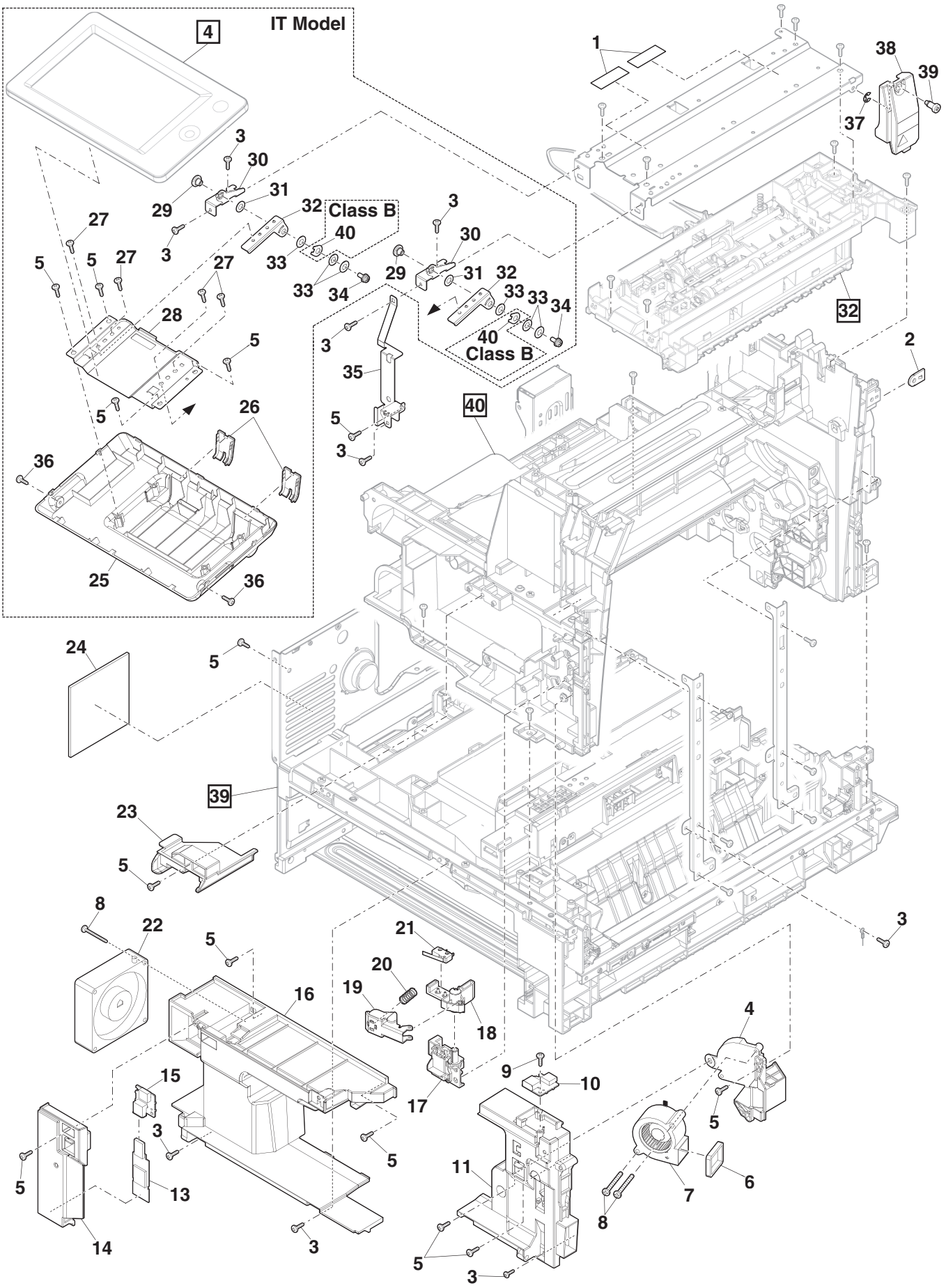

Update : 2018/Nov/9

【042】
ﾊｰﾈｽ部 (Wiring section)[IT Model]

NO.	PARTS CODE	PRICE RANK Ex.	PRICE RANK Ja.	DESCRIPTION		Inter-change	Reason for change	Effective time
1	QCNW-0063QSPZ	AX	FQ	PCU harness	PCU ﾊｰﾈｽ			
2	QCNW-0061QSPZ	BD	GT	DC power supply harness	DC 電源ﾊｰﾈｽ			
3	QCNW-0062QSPZ	BB	GD	SCN-P harness	SCN-P ﾊｰﾈｽ			
5	QCNW-0053QSPZ	AX	FQ	MSW harness	MSW ﾊｰﾈｽ			
6	QCNW-0055QSPZ	AX	FQ	AC-HL harness	AC-HL ﾊｰﾈｽ			
7	QCNW-0054QSPZ	AV	FG	AC-DC harness	AC-DC ﾊｰﾈｽ			
8	DHAi-5358FCPA	AY	FQ	CRUM harness	CRUM ﾊｰﾈｽ			
9	QCNW-0059QSPZ	AY	FQ	MCTC harness	MCTC ﾊｰﾈｽ			
10	QCNW-0068QSPZ	AZ	FX	TN drive harness	TN 駆動ﾊｰﾈｽ			
11	QCNW-0060QSPZ	AT	EZ	CST earth harness	CST ｱｰｽﾊｰﾈｽ			
12	QCNW-0064QSPZ	AY	FQ	DV relay harness	DV 中継ﾊｰﾈｽ			
13	QCNW-0067QSPZ	AX	FQ	PS harness	PS ﾊｰﾈｽ			
14	QCNW-0127QSPZ	AX	FQ	DV harness W	DV ﾊｰﾈｽ W			
15	QCNW-0078QSPZ	BB	GD	Main drive lower harness	ﾒｲﾝ駆動下ﾊｰﾈｽ			
16	QCNW-0077QSPZ	BC	GJ	Main drive upper harness	ﾒｲﾝ駆動上ﾊｰﾈｽ			
17	QCNW-0079QSPZ	BB	GD	Delivery harness	排紙ﾊｰﾈｽ			
18	QCNW-0058QSPZ	AX	FQ	Fuser harness	定着ﾊｰﾈｽ			
19	QCNW-0056QSPZ	AY	FQ	HL relay harness	HL 中継ﾊｰﾈｽ			
20	QCNW-0057QSPZ	AR	EQ	TS-HL harness	TS-HL ﾊ - ﾈｽ			
21	QCNW-0074QSPZ	BB	GD	Right door relay harness	右ﾄﾞｱ中継ﾊｰﾈｽ			
22	QCNW-0075QSPZ	BB	GD	Mped harness	MPED ﾊｰﾈｽ			
23	QCNW-0081QSPZ	BH	HC	Key harness	KEY ﾊｰﾈｽ			
24	QCNW-0092QSPZ	AY	FQ	LCD FFC	LCD FFC			
25	QCNW-0091QSPZ	AX	FQ	LSU FFC	LSU FFC			
26	QCNW-0071QSPZ	BC	GJ	LSU harness	LSU ﾊｰﾈｽ			
27	QCNW-0073QSPZ	BB	GD	PGM harness	PGM ﾊｰﾈｽ			
28	QCNW-0072QSPZ	BC	GJ	LD harness	LD ﾊｰﾈｽ			
29	QCNW-0090QSPZ	AY	FQ	SATA cable	SATA ｹｰﾌﾞﾙ			
30	QCNW-0088QSPZ	BC	GJ	W-LAN harness	W-LAN ﾊｰﾈｽ			
31	QCNW-0086QSPZ	BC	GJ	F-USB harness	F-USB ﾊｰﾈｽ			
32	QCNW-0084QSPZ	BD	GN	Fax harness	FAX ﾊｰﾈｽ			
33	QCNW-0087QSPZ	BC	GJ	PWR relay harness	PWR 中継ﾊｰﾈｽ			
34	QCNW-0080QSPZ	BB	GD	Pwr harness	PWR ﾊｰﾈｽ			
35	QCNW-0096QSPZ	BB	GD	Home sensor cable	ﾎｰﾑｾﾝｻｰｹｰﾌﾞﾙ			
36	QCNW-0097QSPZ	BB	GD	Gnd wire	ｱｰｽﾜｲﾔｰ			
37	QCNW-0095QSPZ	BB	GD	CCD FFC	CCD FFC			
38	QCNW-0093QSPZ	AX	FQ	SCN FFC	SCN FFC			
39	QCNW-0098QSPZ	BB	GD	Sppd harness	SPPD ﾊｰﾈｽ			
40	QCNW-0114QSPZ	BB	GD	Sensor cable	ｾﾝｻｰｹｰﾌﾞﾙ			
41	QCNW-0099QSPZ	BD	GN	RSPF SPPD harness	RSPF SPPD ﾊｰﾈｽ			
42	QCNW-0100QSPZ	BE	GN	ADF harness	ADF ﾊｰﾈｽ			
43	QCNW-0105QSPZ	AX	FQ	CIS FFC	CIS FFC			
44	QCNW-0104QSPZ	AZ	FX	Paper feed harness	給紙ﾊｰﾈｽ			
45	QCNW-0102QSPZ	BB	GD	Base sensor harness	ﾍﾞｰｽｾﾝｻｰﾊｰﾈｽ			
46	QCNW-0103QSPZ	AY	FQ	Transport harness	搬送ﾊｰﾈｽ			
47	QCNW-0101QSPZ	BB	GD	Motor clutch harness	ﾓｰﾀｰｸﾗｯﾁﾊｰﾈｽ			
48	QCNW-0083QSPZ	BB	GD	Desk relay harness	ﾃﾞｽｸ中継ﾊｰﾈｽ			
49	QCNW-0120QSPZ	AY	FQ	LSU earth harness	LSU ｱｰｽﾊｰﾈｽ			

【042】

ﾊｰﾈｽ部 (Wiring section)[IT Model]

ACDC 電源 (ACDC Power supply)

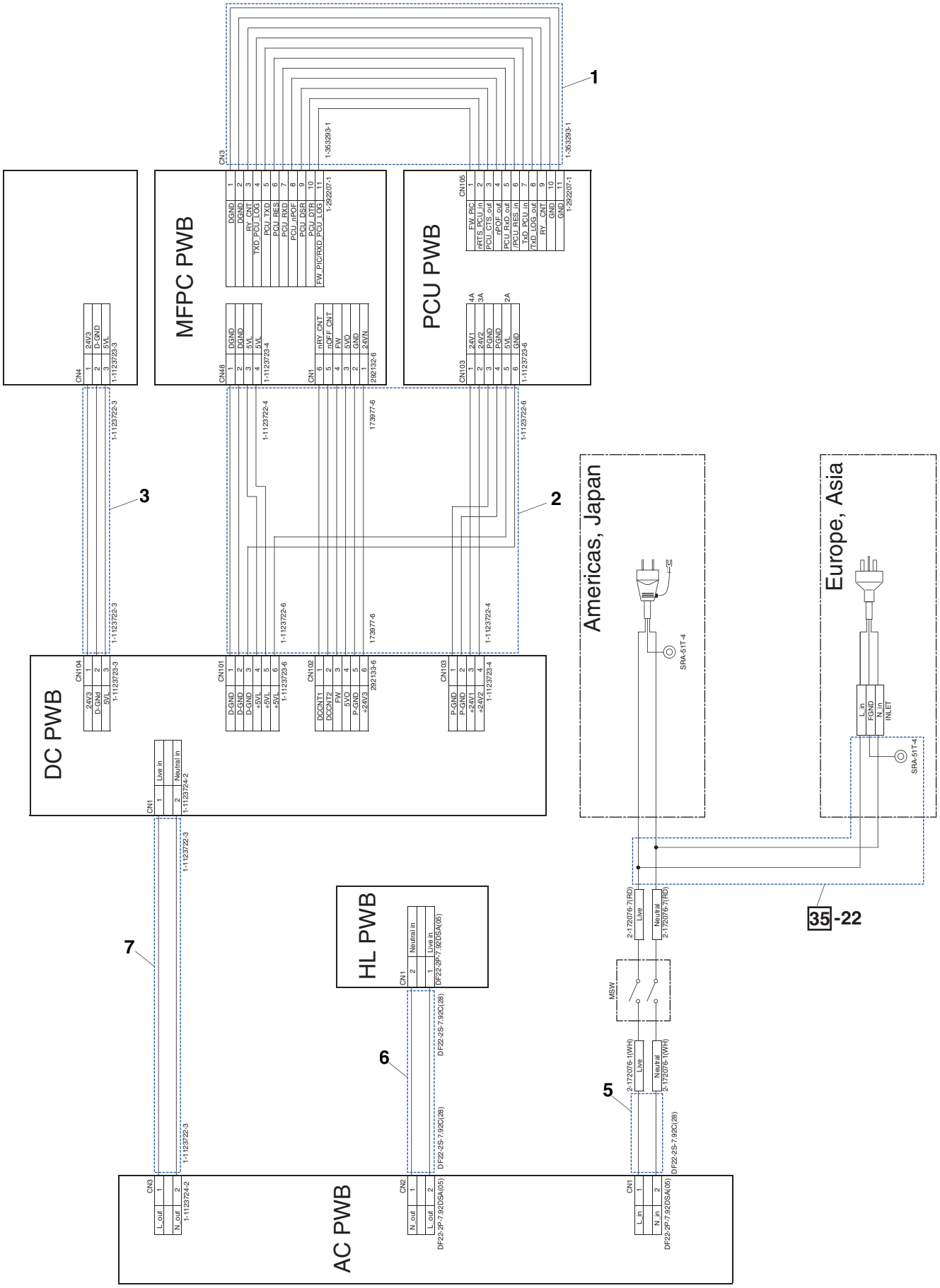

Update : 2018/Nov/9

【042】

ﾊｰﾈｽ部 (Wiring section)[IT Model]

HV,DV,PS,TN 駆動 ,FAN(HV,DV,PS,TN drive,FAN)

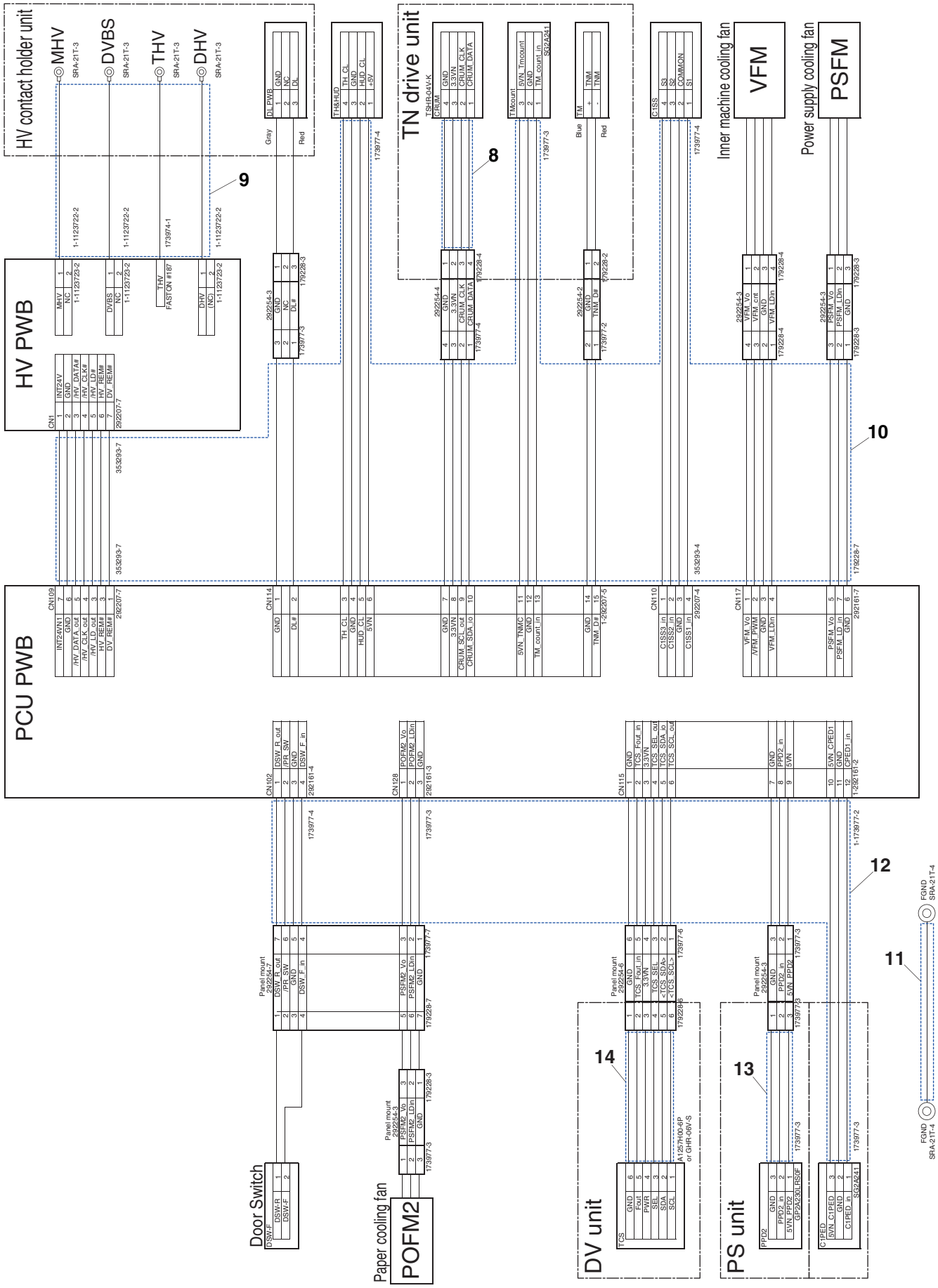

Update : 2018/Nov/9

【042】

ﾊｰﾈｽ部 (Wiring section)[IT Model]

定着 , ﾒｲﾝ駆動 , 排紙 , 右ﾄﾞｱ (Fusing, Main drive,Delivery,Right door)

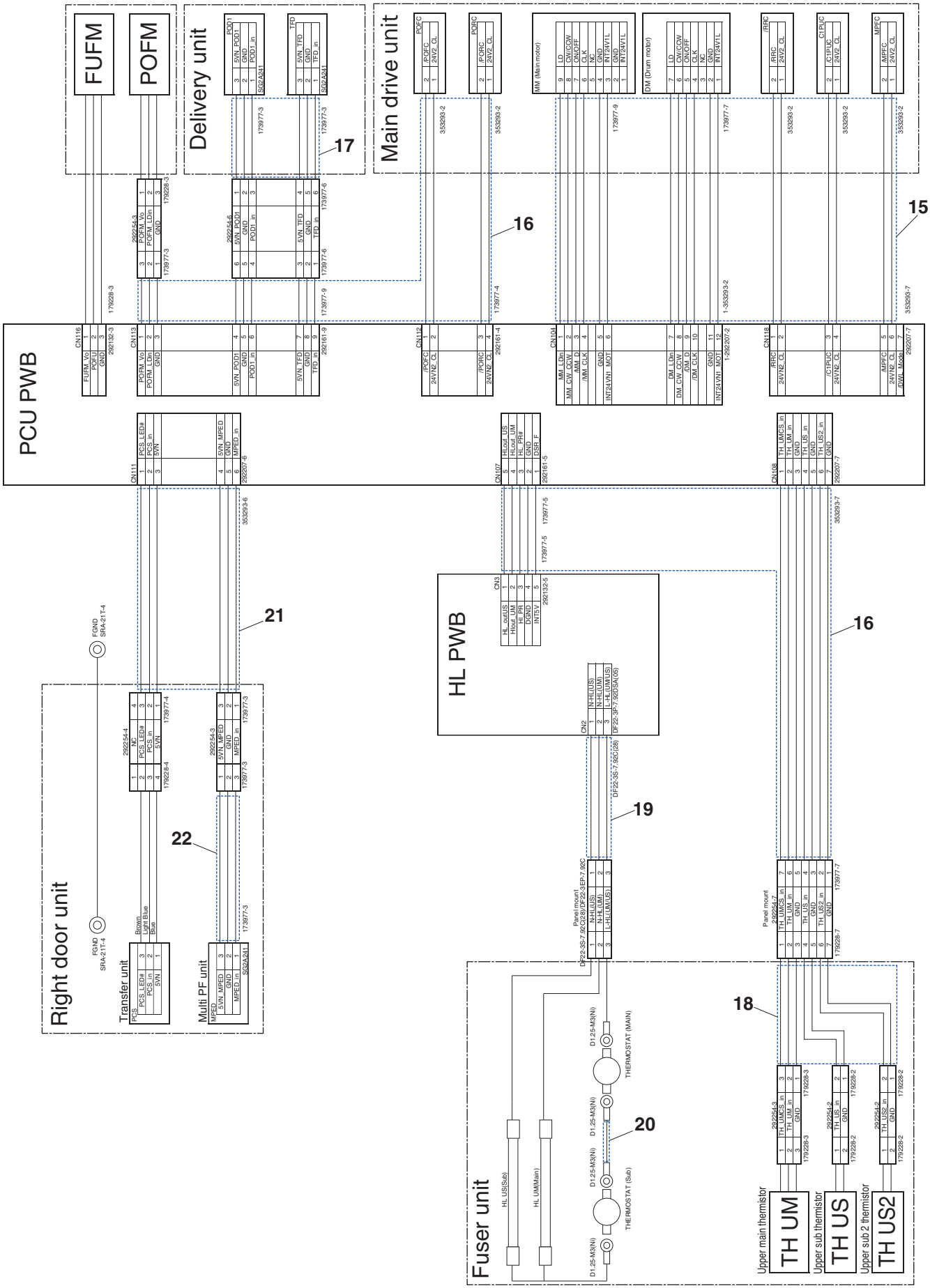

Update : 2018/Nov/9

【042】
ﾊｰﾈｽ部 (Wiring section)[IT Model]

LSU, 操作ﾊﾟﾈﾙ (LSU, Operation panel)

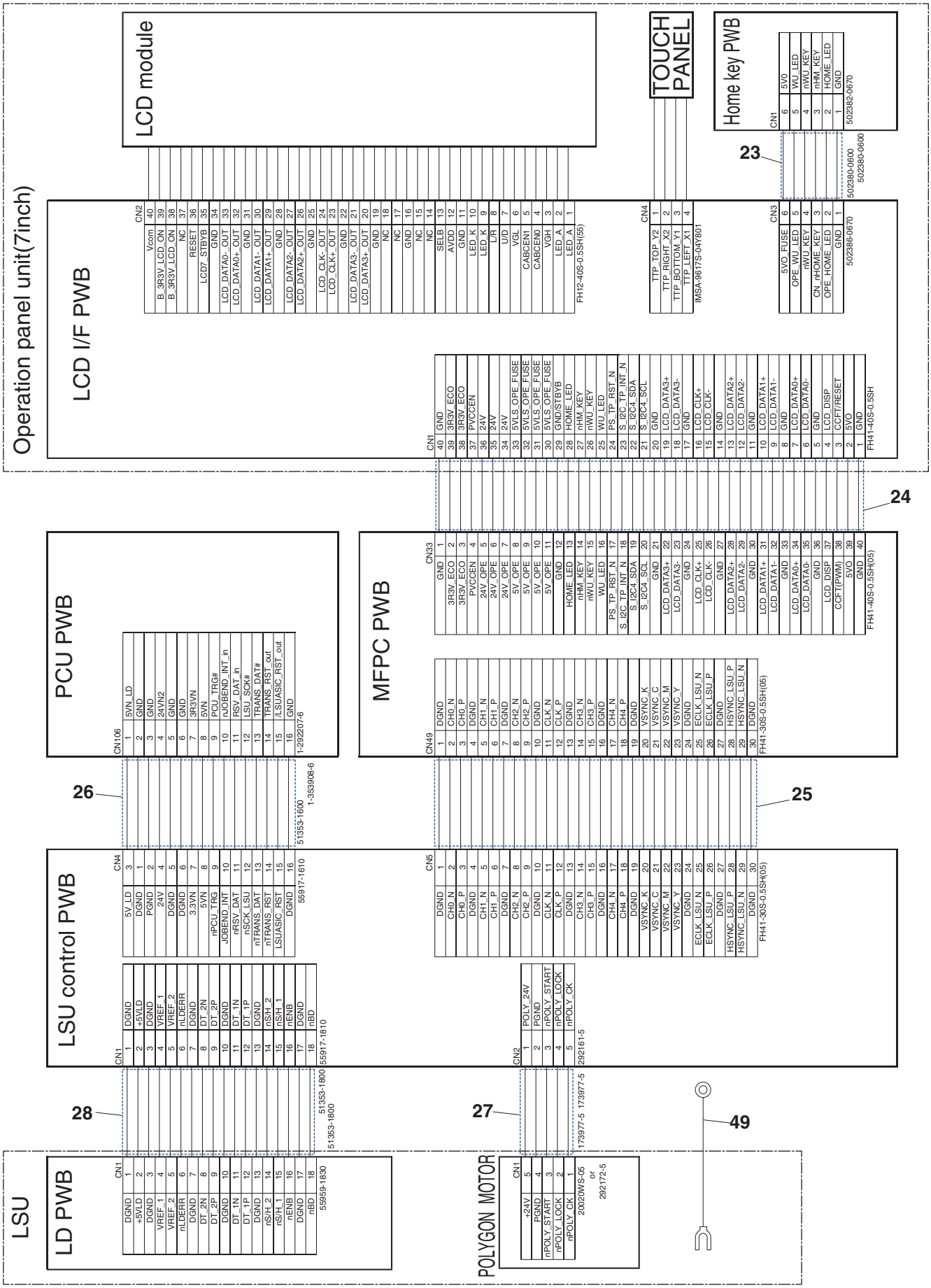

Update : 2018/Nov/9

【042】

ﾊｰﾈｽ部 (Wiring section)[IT Model]

FAX,MFP,HDD

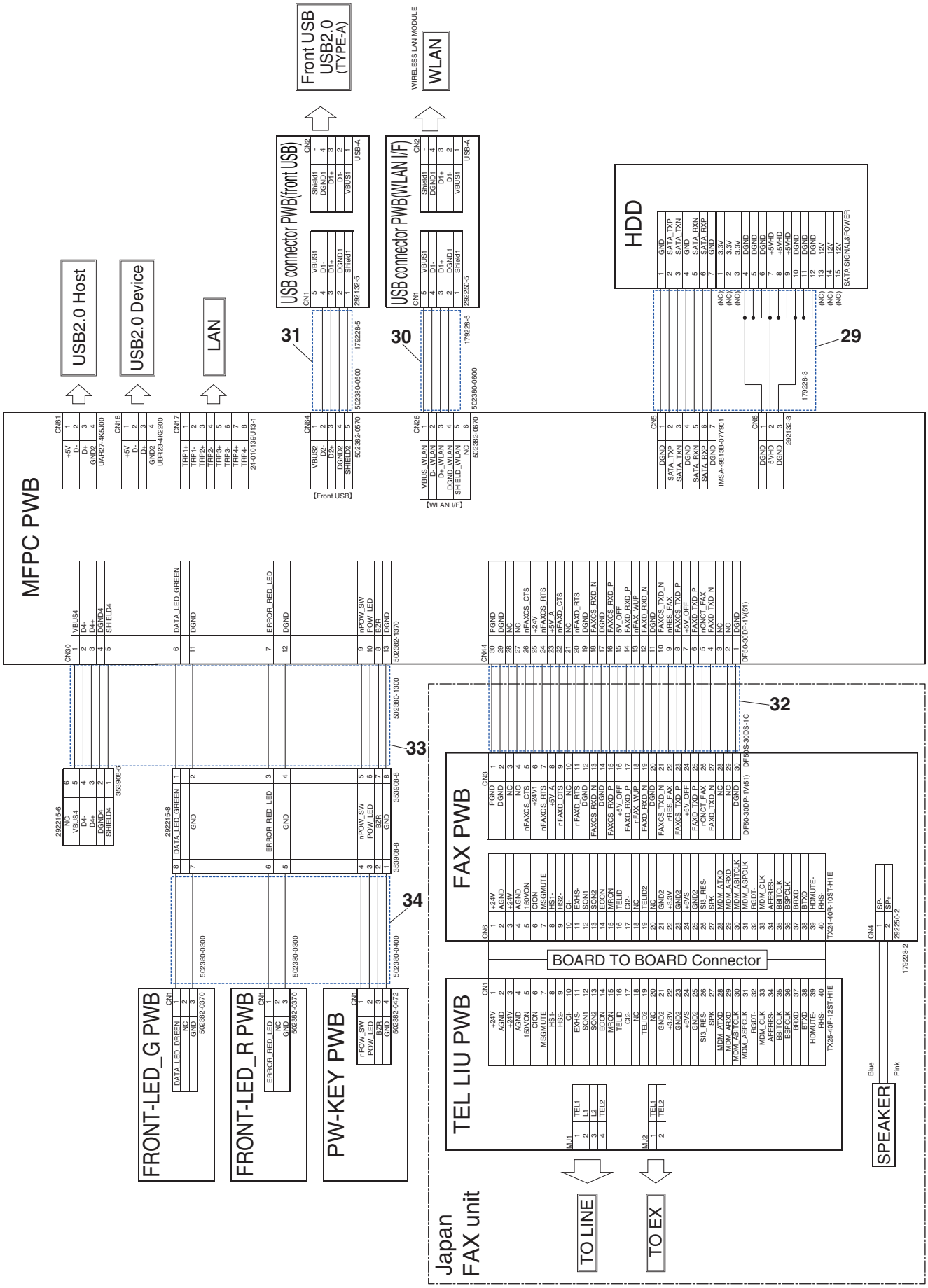

Update : 2018/Nov/9

ﾊｰﾈｽ部 (Wiring section)[IT Model]

ｽｷｬﾅｰ (Scanner)

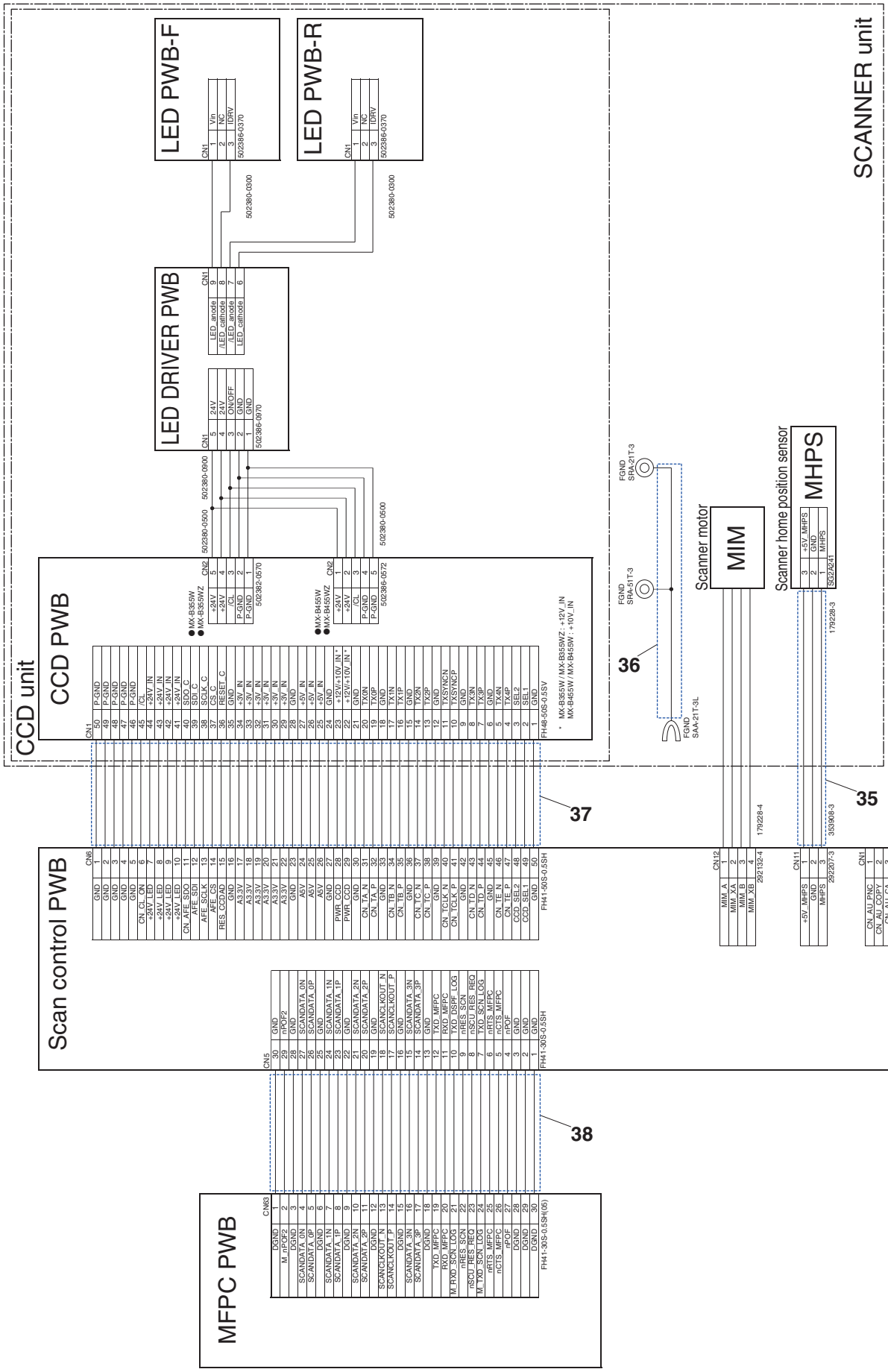

【042】

ﾊｰﾈｽ部 (Wiring section)[IT Model]

DSPF,RSPF

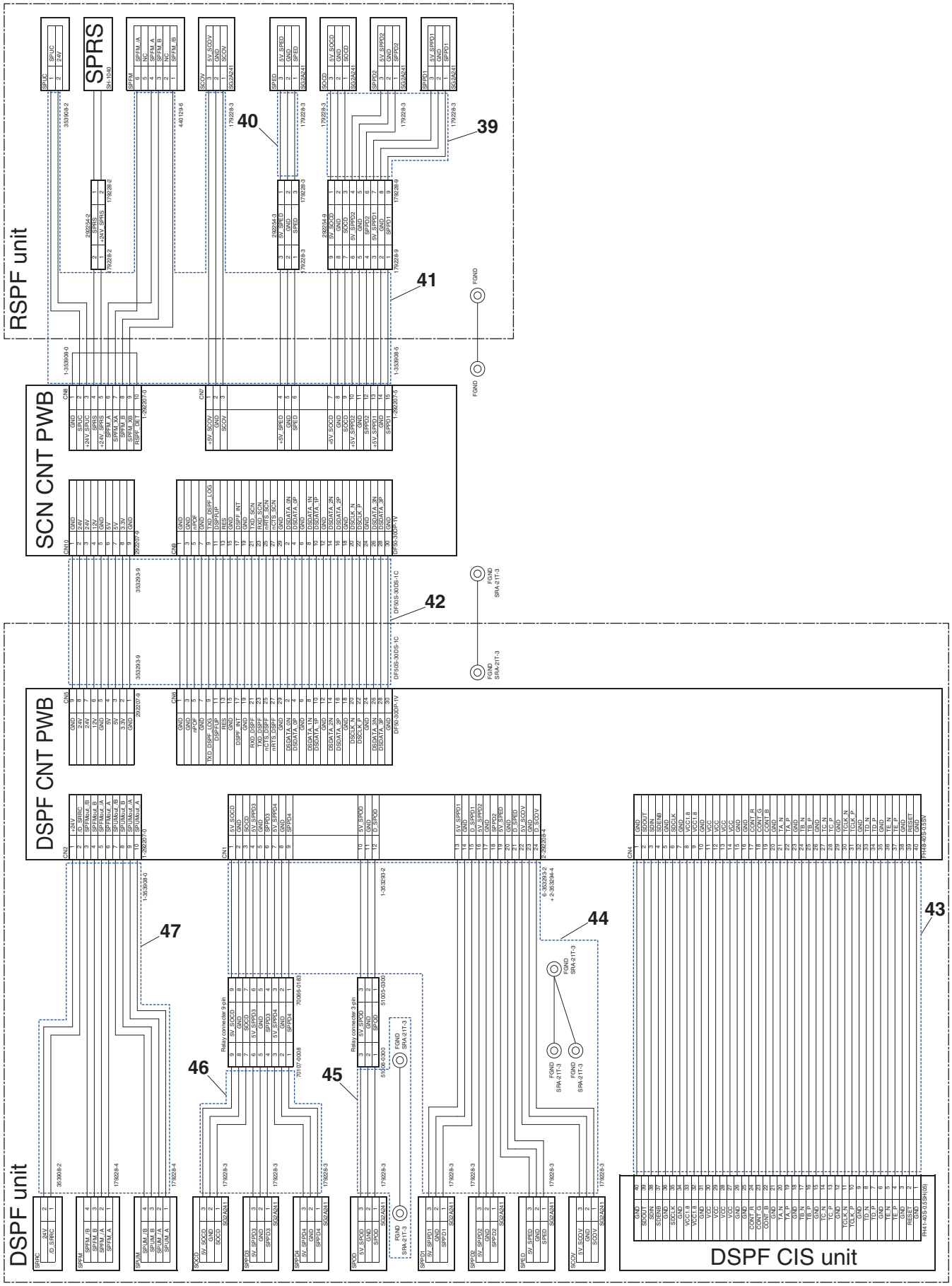

【042】
ﾊｰﾈｽ部 (Wiring section)[IT Model]

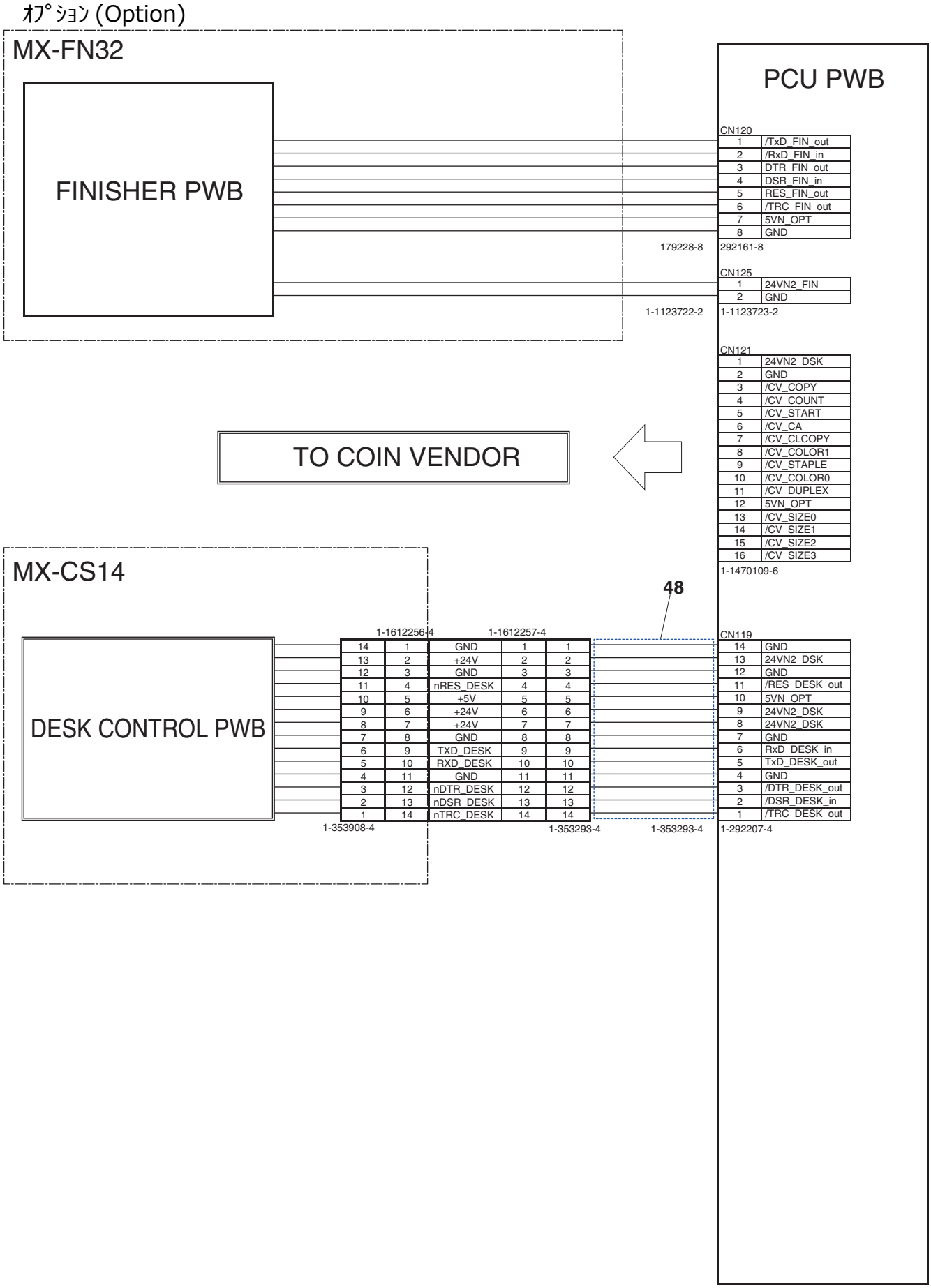

Update : 2018/Nov/9

【043】
ﾊｰﾈｽ部 (Wiring section)[MFP Model,PRINTER Model]

NO.	PARTS CODE	PRICE RANK Ex.	PRICE RANK Ja.	DESCRIPTION		Inter-change	Reason for change	Effective time
1	QCNW-0131QSPZ	BD	GN	DC power supply harness	DC 電源ﾊｰﾈｽ			
2	QCNW-0053QSPZ	AX	FQ	MSW harness	MSW ﾊｰﾈｽ			
3	QCNW-0055QSPZ	AX	FQ	AC-HL harness	AC-HL ﾊｰﾈｽ			
4	QCNW-0054QSPZ	AV	FG	AC-DC harness	AC-DC ﾊｰﾈｽ			
5	QCNW-0132QSPZ	BE	GN	Toner drive interface harness	ﾄﾅｰ駆動中継ﾊｰﾈｽ			
6	DHAi-5358FCPA	AY	FQ	CRUM harness	CRUM ﾊｰﾈｽ			
7	QCNW-0059QSPZ	AY	FQ	MCTC harness	MCTC ﾊｰﾈｽ			
8	QCNW-0060QSPZ	AT	EZ	CST earth harness	CST ｱｰｽﾊｰﾈｽ			
9	QCNW-0130QSPZ	BD	GN	DV relay harness	DV 中継ﾊｰﾈｽ			
10	QCNW-0067QSPZ	AX	FQ	PS harness	PS ﾊｰﾈｽ			
11	QCNW-0127QSPZ	AX	FQ	DV harness W	DV ﾊｰﾈｽ W			
12	QCNW-0134QSPZ	BD	GN	Main drive lower harness	ﾒｲﾝ駆動下ﾊｰﾈｽ			
13	QCNW-0133QSPZ	BD	GN	Main drive upper harness	ﾒｲﾝ駆動上ﾊｰﾈｽ			
14	QCNW-0079QSPZ	BB	GD	Delivery harness	排紙ﾊｰﾈｽ			
15	QCNW-0058QSPZ	AX	FQ	Fuser harness	定着ﾊｰﾈｽ			
16	QCNW-0056QSPZ	AY	FQ	HL relay harness	HL 中継ﾊｰﾈｽ			
17	QCNW-0057QSPZ	AR	EQ	TS-HL harness	TS-HL ﾊ - ﾈｽ			
18	QCNW-0135QSPZ	BC	GJ	Right door interface harness	右ﾄﾞｱ中継ﾊｰﾈｽ			
19	QCNW-0075QSPZ	BB	GD	Mped harness	MPED ﾊｰﾈｽ			
20	QCNW-0146QSPZ	BC	GJ	LED harness	LED ﾊｰﾈｽ			
21	QCNW-0144QSPZ	AZ	FX	LCD FFC	LCD FFC			
♣	QCNW-0147QSPZ	BB	GD	LCD FFC	LCD FFC			
22	QCNW-0145QSPZ	BC	GJ	Operation panel FFC	操作ﾊﾟﾈﾙ FFC			
♣	QCNW-0148QSPZ	BC	GJ	Operation panel FFC	操作ﾊﾟﾈﾙ FFC			
23	QCNW-0139QSPZ	BC	GJ	Polygon motor harness	ﾎﾟﾘｺﾞﾝﾓｰﾀｰﾊｰﾈｽ			
24	QCNW-0137QSPZ	BD	GN	LSU relay harness	LSU 中継ﾊｰﾈｽ			
25	QCNW-0129QSPZ	BD	GN	W-LAN harness	W-LAN ﾊｰﾈｽ			
26	QCNW-0128QSPZ	BD	GN	USB harness	USB ﾊｰﾈｽ			
27	QCNW-0143QSPZ	AZ	FX	FAX FFC	FAX FFC			
28	QCNW-0125QSPZ	BB	GD	CIS FFC	CIS FFC			
29	QCNW-0122QSPZ	BC	GJ	Scan sensor harness	ｽｷｬﾝｾﾝｻｰﾊｰﾈｽ			
30	QCNW-0123QSPZ	BC	GJ	Scan motor harness	ｽｷｬﾝﾓｰﾀｰﾊｰﾈｽ			
31	QCNW-0124QSPZ	AZ	FX	Motherboard FFC	ﾏｻﾞｰﾎﾞｰﾄﾞ FFC			
32	QCNW-0098QSPZ	BB	GD	Sppd harness	SPPD ﾊｰﾈｽ			
33	QCNW-0114QSPZ	BB	GD	Sensor cable	ｾﾝｻｰｹｰﾌﾞﾙ			
34	QCNW-0099QSPZ	BD	GN	RSPF SPPD harness	RSPF SPPD ﾊｰﾈｽ			
35	QCNW-0138QSPZ	BC	GJ	Desk relay harness	ﾃﾞｽｸ中継ﾊｰﾈｽ			
36	QCNW-0120QSPZ	AY	FQ	LSU earth harness	LSU ｱｰｽﾊｰﾈｽ			
37	QCNW-0142QSPZ	AX	FQ	FAX ringer harness	FAX ﾘﾝｶﾞｰﾊｰﾈｽ			

Matrix

No.21	LCD FFC(LCD FFC)	
PARTS CODE	MX-B450W MX-B350W AR-B350W MX-B450FZ AR-B451F MX-B350FZ AR-B351FT MX-B450Z AR-B451T MX-B350Z AR-B351T	MX-B450P MX-B350P MX-B350PZ MX-B451PZ AR-B453PT MX-B351PZ AR-B353PT
QCNW-0144QSPZ	1st Lot	
QCNW-0147QSPZ		1st Lot

Update : 2018/Nov/9

【043】

ﾊｰﾈｽ部 (Wiring section)[MFP Model,PRINTER Model]

No.22	操作ﾊﾟﾈﾙ FFC(Operation panel FFC)	
PARTS CODE	MX-B450W MX-B350W AR-B350W MX-B450FZ AR-B451F MX-B350FZ AR-B351FT MX-B450Z AR-B451T MX-B350Z AR-B351T	MX-B450P MX-B350P MX-B350PZ MX-B451PZ AR-B453PT MX-B351PZ AR-B353PT
QCNW-0145QSPZ	1st Lot	
QCNW-0148QSPZ		1st Lot

【043】

ﾊｰﾈｽ部 (Wiring section)[MFP Model,PRINTER Model]

ACDC 電源 (ACDC Power supply)

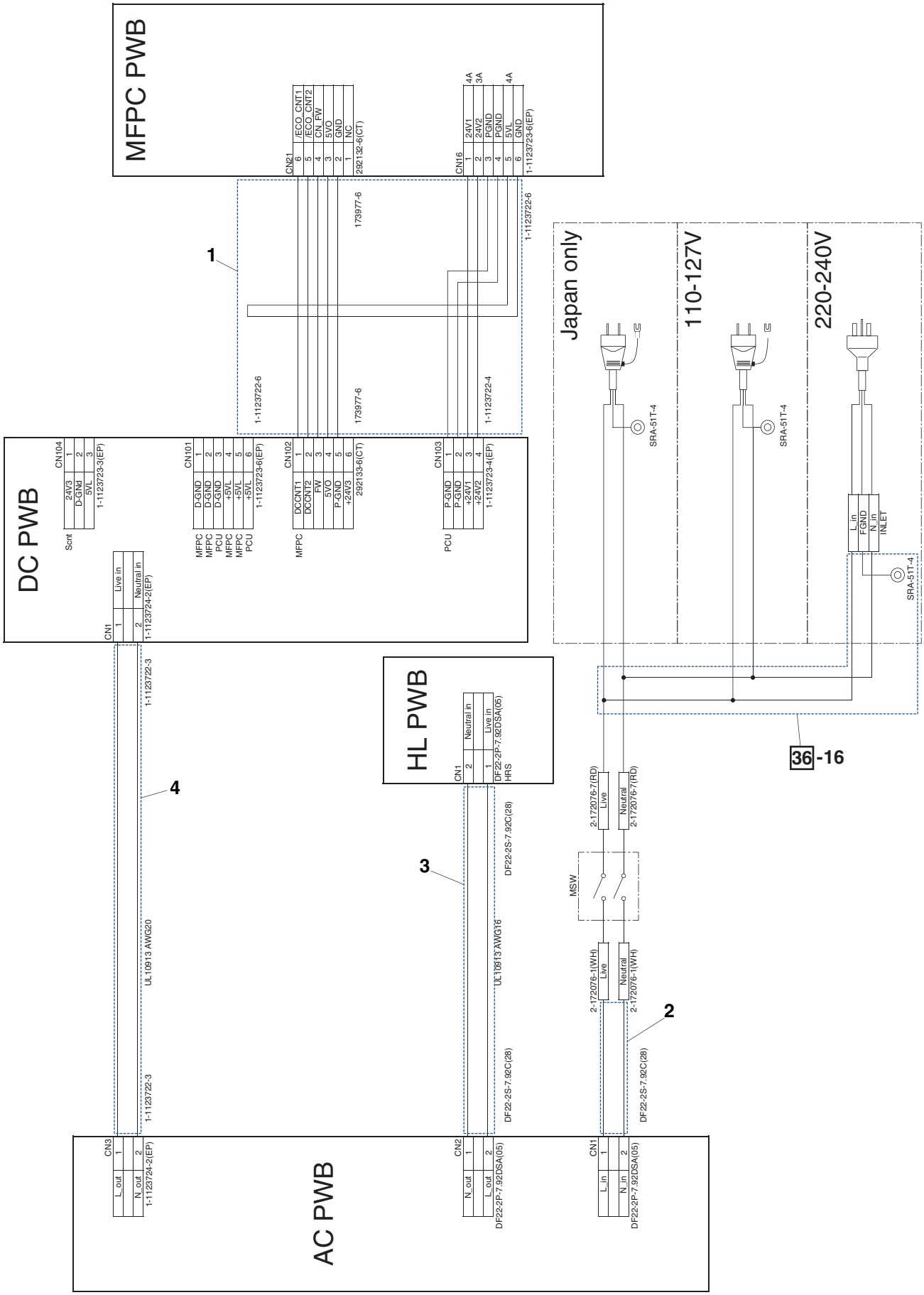

Update : 2018/Nov/9

【043】

ﾊｰﾈｽ部 (Wiring section)[MFP Model,PRINTER Model]

HV,DV,PS,TN 駆動 ,FAN(HV,DV,PS,TN drive,FAN)

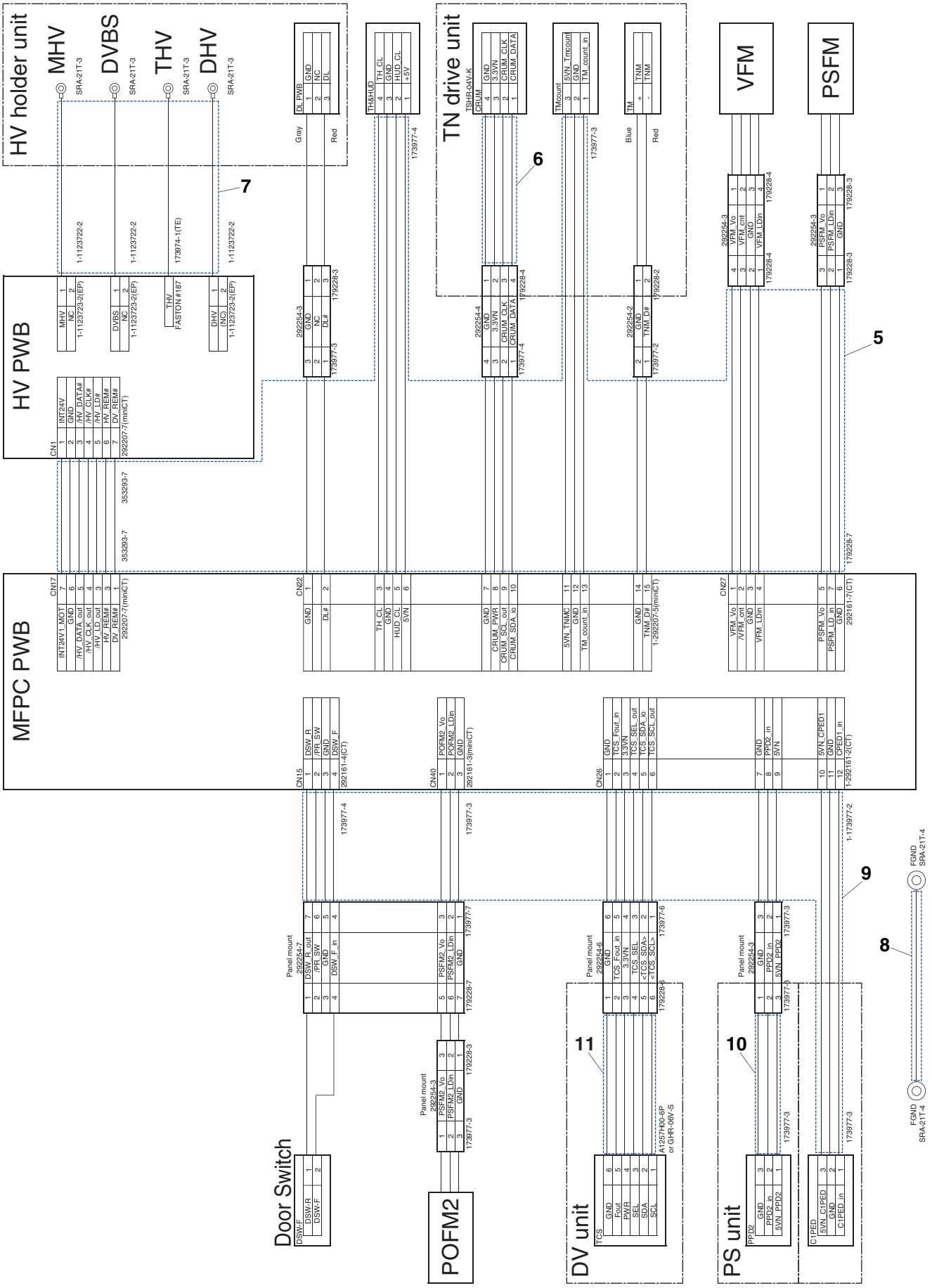

Update : 2018/Nov/9

【043】

ﾊｰﾈｽ部 (Wiring section)[MFP Model,PRINTER Model]

定着 , ﾒｲﾝ駆動 , 排紙 , 右ﾄﾞｱ (Fusing, Main drive,Delivery,Right door)

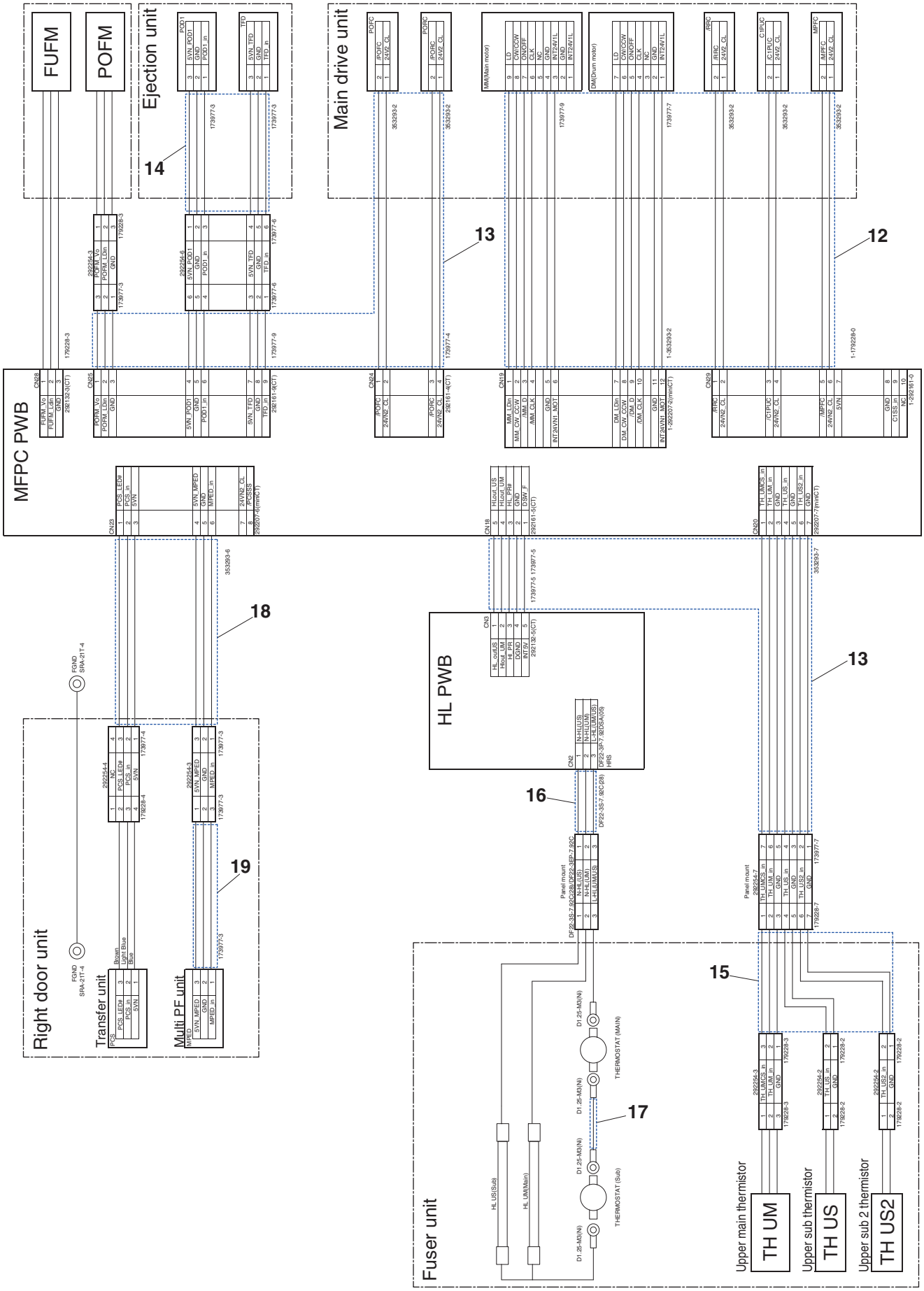

Update : 2018/Nov/9

【043】

ﾊｰﾈｽ部 (Wiring section)[MFP Model,PRINTER Model]

LSU, 操作ﾊﾟﾈﾙ (LSU, Operation panel)

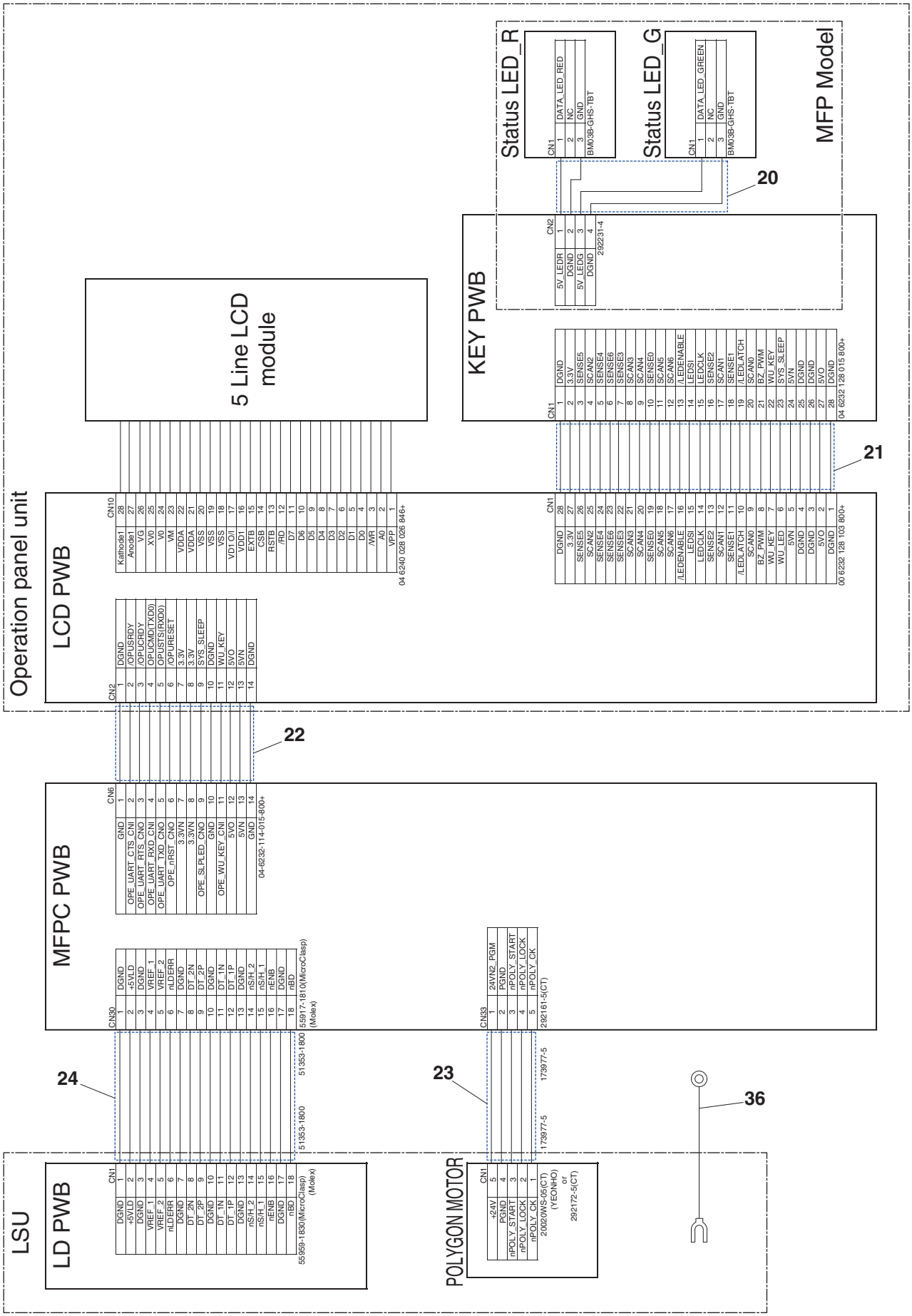

Update : 2018/Nov/9

【043】

ﾊｰﾈｽ部 (Wiring section)[MFP Model,PRINTER Model]

FAX,MFP,HDD

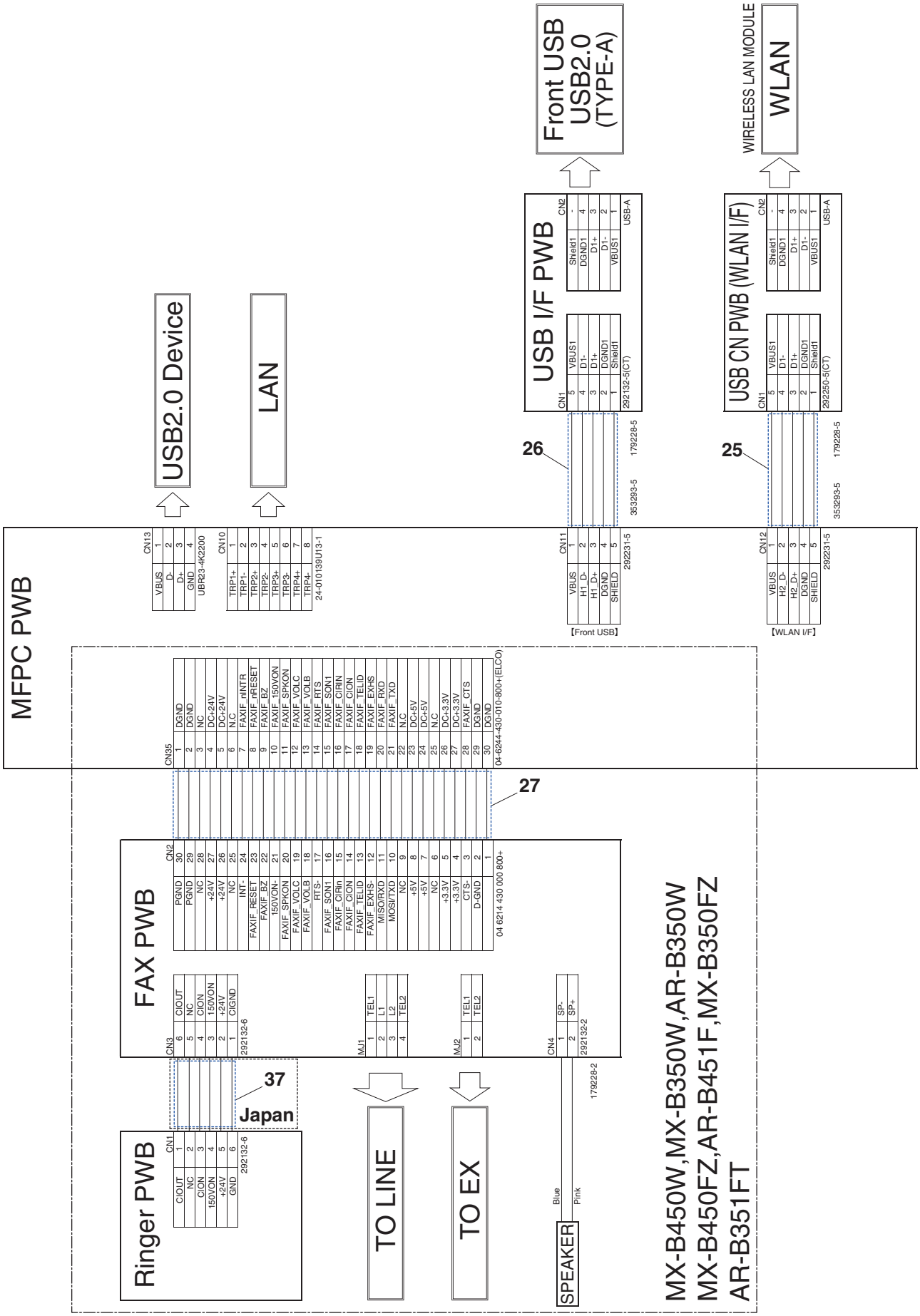

Update : 2018/Nov/9

【043】

ﾊｰﾈｽ部 (Wiring section)[MFP Model,PRINTER Model]

ｽｷｬﾅｰ (Scanner)

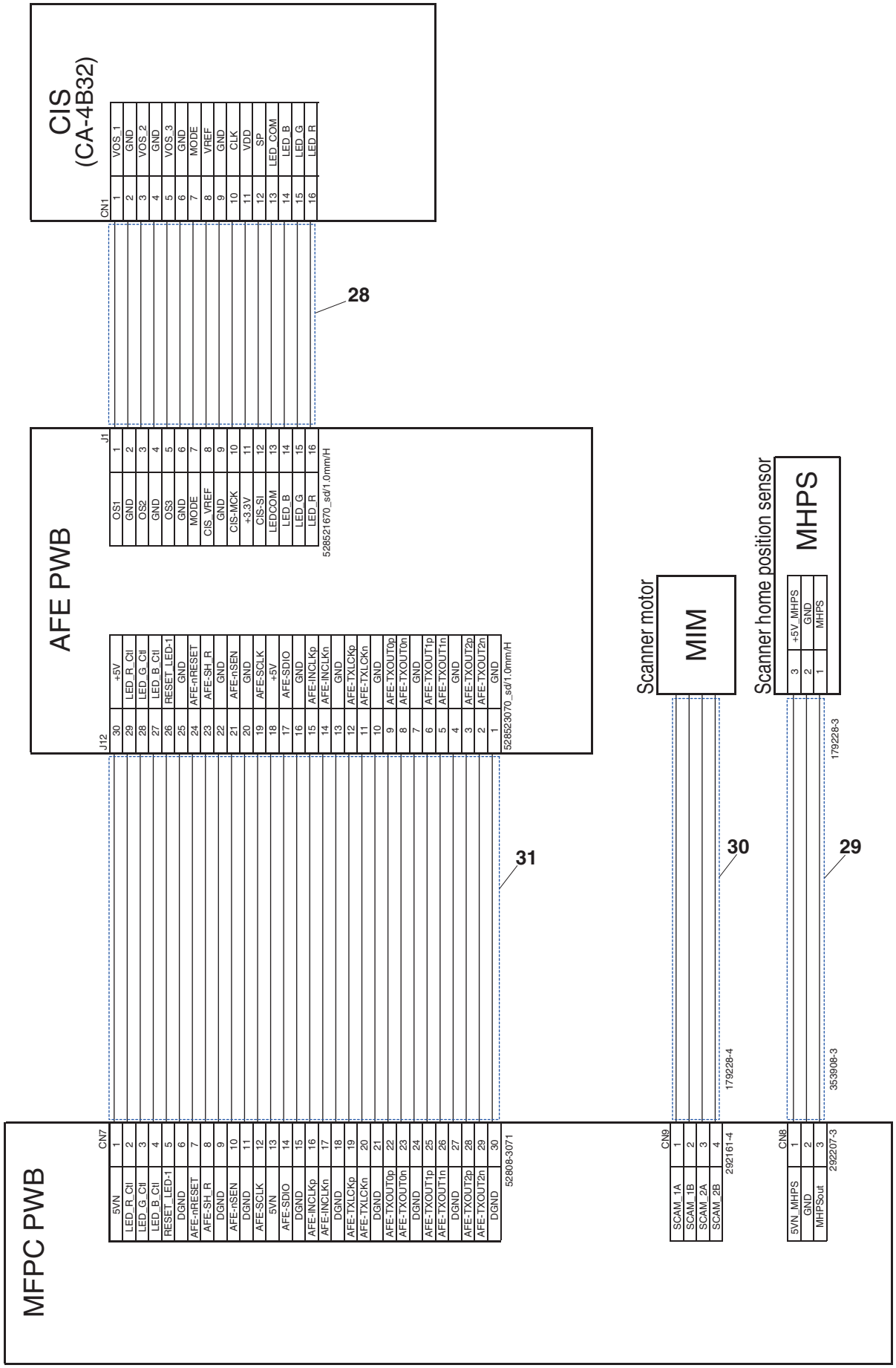

【043】

ﾊｰﾈｽ部 (Wiring section)[MFP Model,PRINTER Model]

RSPF

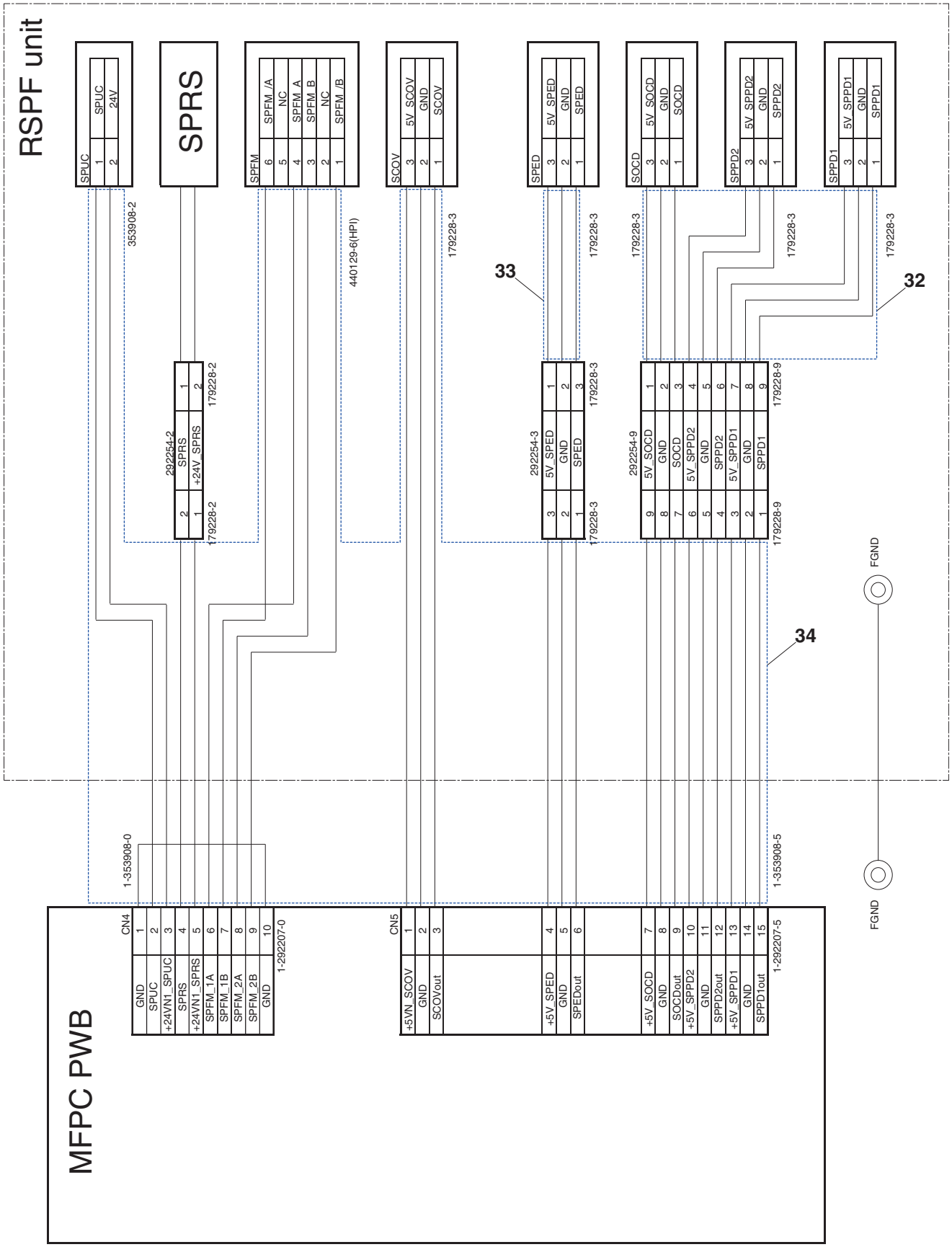

Update : 2018/Nov/9

【043】

ﾊｰﾈｽ部 (Wiring section)[MFP Model,PRINTER Model]

ｵﾌﾟｼｮﾝ (Option)

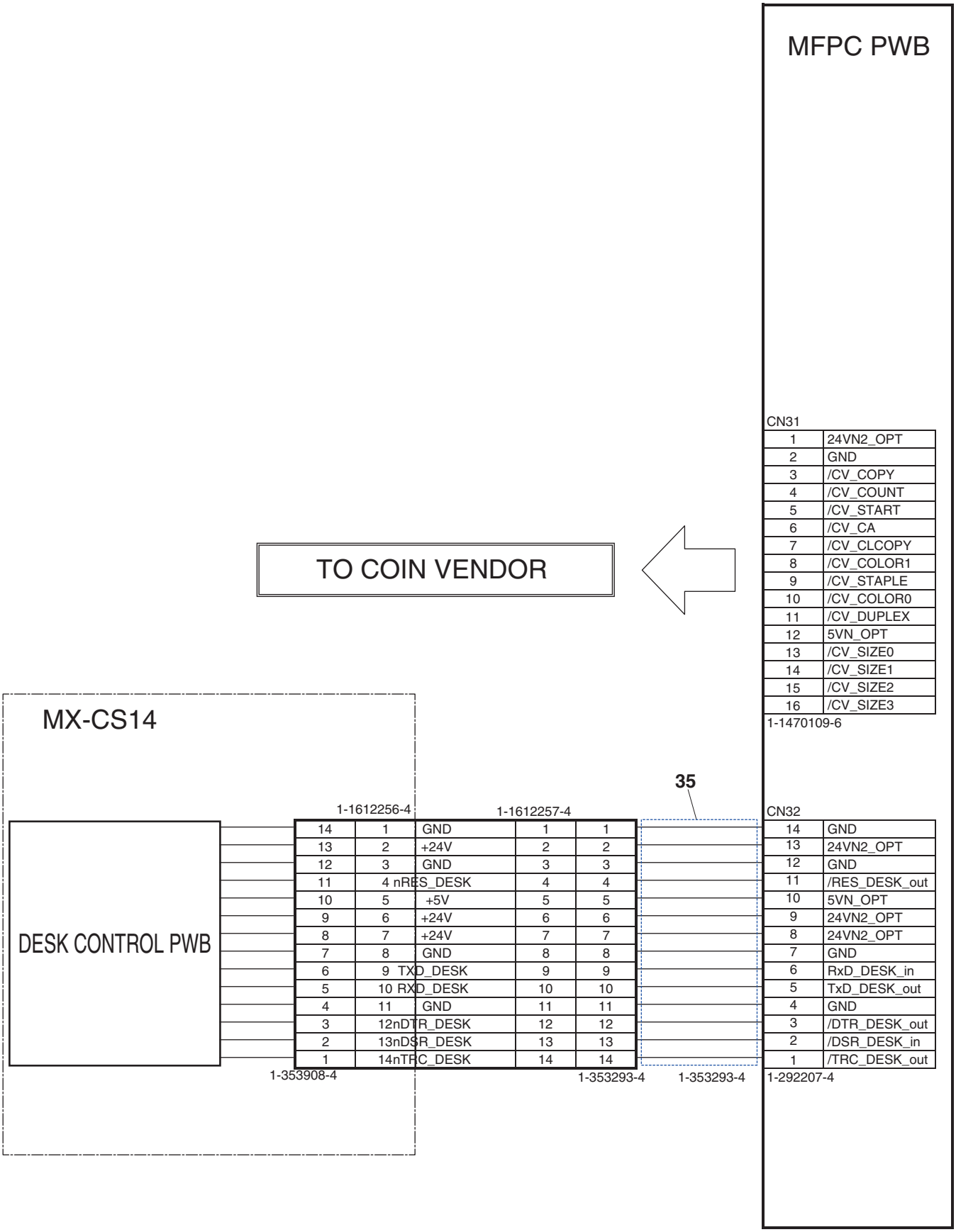

【044】

ﾜｲﾔｰｻﾄﾞﾙ･ｺｱ (Wire saddle, Core)

NO.	PARTS CODE	PRICE RANK Ex.	PRICE RANK Ja.	DESCRIPTION		Inter-change	Reason for change	Effective time
1	ＬＢＮＤＪ００９９ＦＣＰＺ	AC	DJ	Clamp(N-4)	ﾅｲﾛﾝｸﾗﾝﾌﾟ			
2	ＬＨＬＤＷ１６２０ＦＣＺＺ	AC	DJ	Edge holder(11U)	ｴｯｼﾞﾎﾙﾀﾞｰ			
3	ＬＨＬＤＷ２０３７ＦＣＰＺ	AC	DJ	Clamp(RMS-1V0)	ｸﾗﾝﾌﾟ			
4	ＬＨＬＤＷ２３７６ＦＣＰＺ	AC	DD	Clamp(GRBWS-0911E-V0)	ｸﾗﾝﾌﾟ			
5	ＲＣＯＲＦ００４６ＦＣＺＺ	AH	DX	Core(UF-90)	ｺｱ			
6	ＲＣＯＲＦ００６５ＦＣＰＺ	AH	DX	Ferrite core(GRFC-8)	ﾌｪﾗｲﾄｺｱ			

1

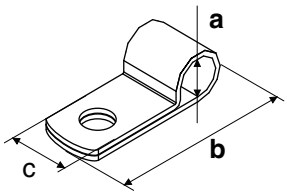

a : 6.8mm
b : 23.7mm
c : 11.1mm

2

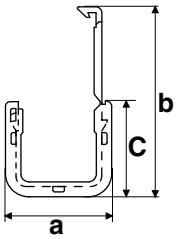

a : 18mm
b : 31.4mm
C : 11.1mm

3

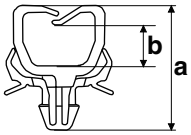

a : 12.8mm
b : 4.2mm

4

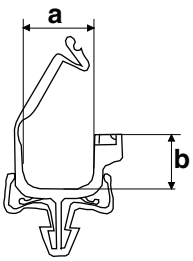

a : 11mm
b : 8.5mm

5

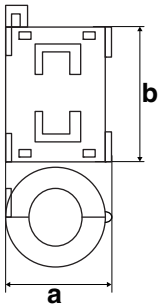

a : 15.4mm
b : 22mm

6

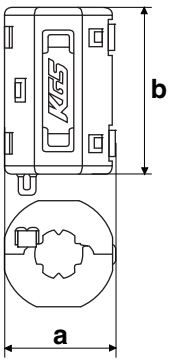

a : 20.4mm
b : 31.5mm

Update : 2018/Nov/9

【045】
付属品 (Accessories)

NO.	PARTS CODE	PRICE RANK Ex.	PRICE RANK Ja.	DESCRIPTION		Inter-change	Reason for change	Effective time
1 ♣	CDSKA0382QS31	AX	FQ	CD-ROM	CD-ROM			
	CDSKA0383QS31	AW	FG	CD-ROM	CD-ROM			
	♻ CDSKA0383QS32	AW	FG	CD-ROM	CD-ROM	3	Specification change	18/May
	CDSKA0384QS31	AW	FG	CD-ROM	CD-ROM			
	CDSKA0385QS31	BB	GD	CD-ROM	CD-ROM			
2	TGANE0191FCZZ	AH	DX	Australia warranty [Australia]	ｵｰｽﾄﾗﾘｱ保証書			
	♻ TGANE0191FHZZ	AH	DX	Australia warranty [Australia]	ｵｰｽﾄﾗﾘｱ保証書	1	Productivity improvement	18/April RC
3 ♣	UDiSZ0071QSZZ	AY	FQ	Operation manual(CD-ROM)	取り扱い説明書			
	UDiSZ0072QSZZ	BB	GD	Operation manual(CD-ROM)	取り扱い説明書			
	UDiSZ0073QSZZ	BK	HG	Operation manual(CD-ROM)	取り扱い説明書			
	UDiSZ0074QSZZ	BK	HG	Operation manual(CD-ROM)	取り扱い説明書			
	UDiSJ0075QSZZ	BB	GD	Operation manual(CD-ROM)	取り扱い説明書			

Matrix

No.1	CD-ROM(CD-ROM)			
PARTS CODE	MX-B455WZ MX-B455W MX-B355WZ MX-B355W		MX-B450W MX-B350W AR-B350W MX-B450FZ AR-B451F MX-B350FZ AR-B351FT MX-B450Z AR-B451T MX-B350Z AR-B351T MX-B450P MX-B350P MX-B350PZ MX-B451PZ AR-B453PT MX-B351PZ AR-B353PT	
	Hong Kong Class B	Japan	Europe2 Asia	Japan
CDSKA0382QS31	1st Lot			
CDSKA0383QS31		1st Lot		
♻ CDSKA0383QS32		18/May		
CDSKA0384QS31			1st Lot	
CDSKA0385QS31				1st Lot

No.3	取り扱い説明書 (Operation manual)				
PARTS CODE	MX-B450W MX-B350W AR-B350W MX-B450FZ AR-B451F MX-B350FZ AR-B351FT MX-B450Z AR-B451T MX-B350Z AR-B351T			MX-B450P MX-B350P MX-B350PZ MX-B451PZ AR-B453PT MX-B351PZ AR-B353PT	
	Americas Australia Asia	Europe	Japan	Americas Australia Asia	Europe
UDiSZ0071QSZZ	1st Lot				
UDiSZ0072QSZZ		1st Lot			
UDiSZ0073QSZZ				1st Lot	
UDiSZ0074QSZZ					1st Lot
UDiSJ0075QSZZ			1st Lot		

SHARP

SHARP CORPORATION
Business Solutions BU

First edition : December 2017
Last edition : November 2018