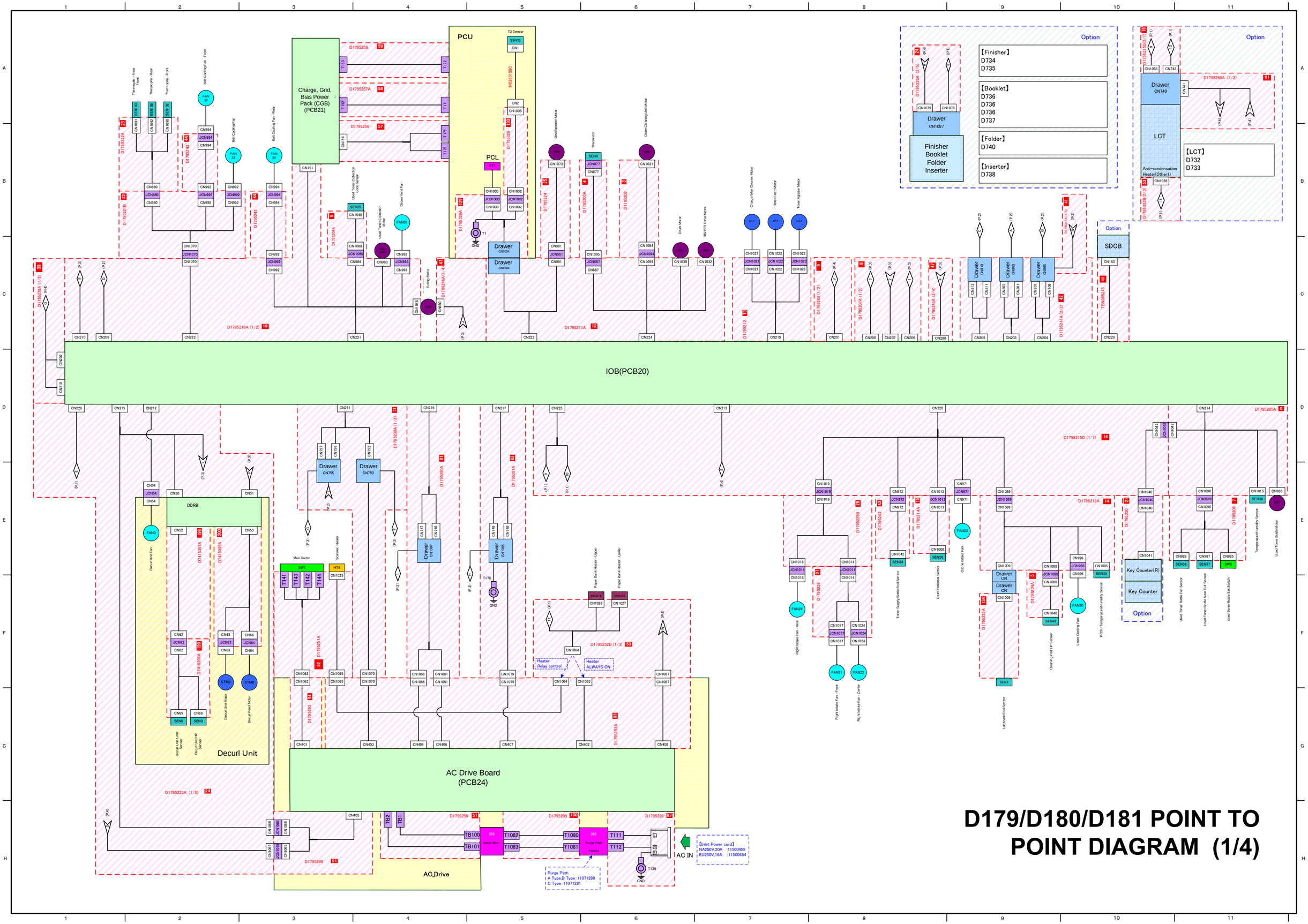

D179/D180/D181 POINT TO POINT DIAGRAM (1/4)

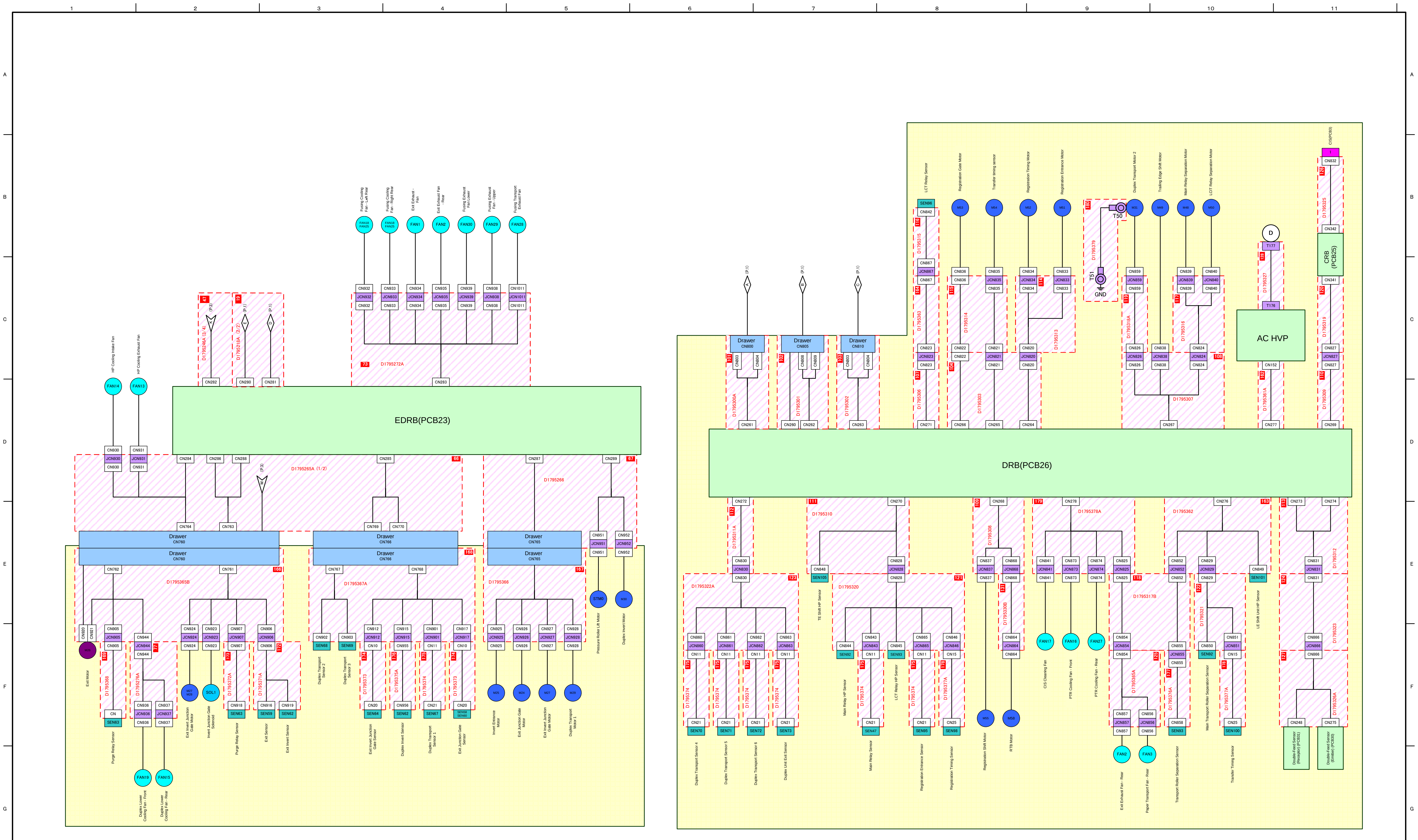

D179/D180/D181 POINT TO POINT DIAGRAM (2/4)

D179/D180/D181 POINT TO POINT DIAGRAM (3/4)

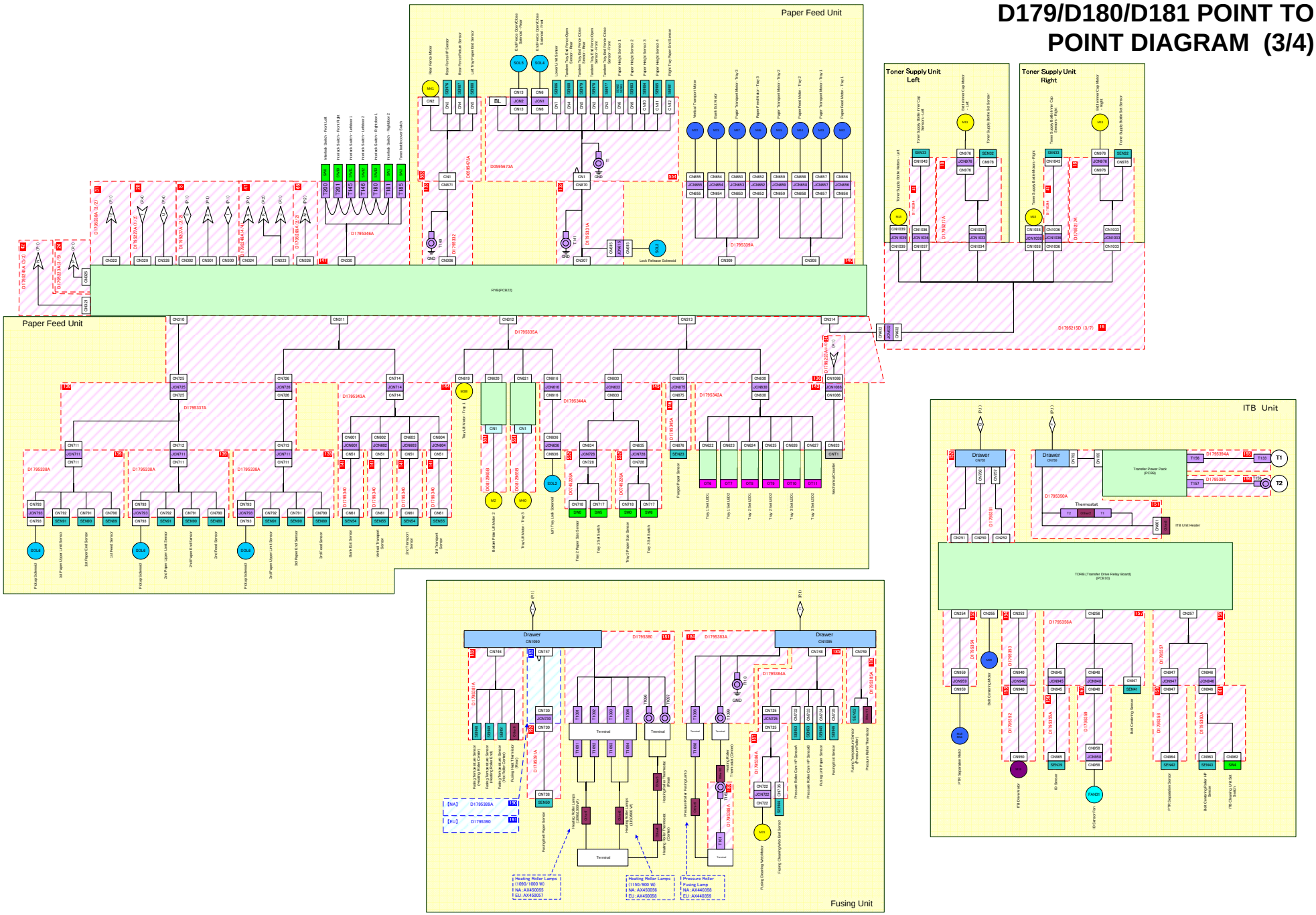

D179/D180/D181 POINT TO POINT DIAGRAM (4/4)

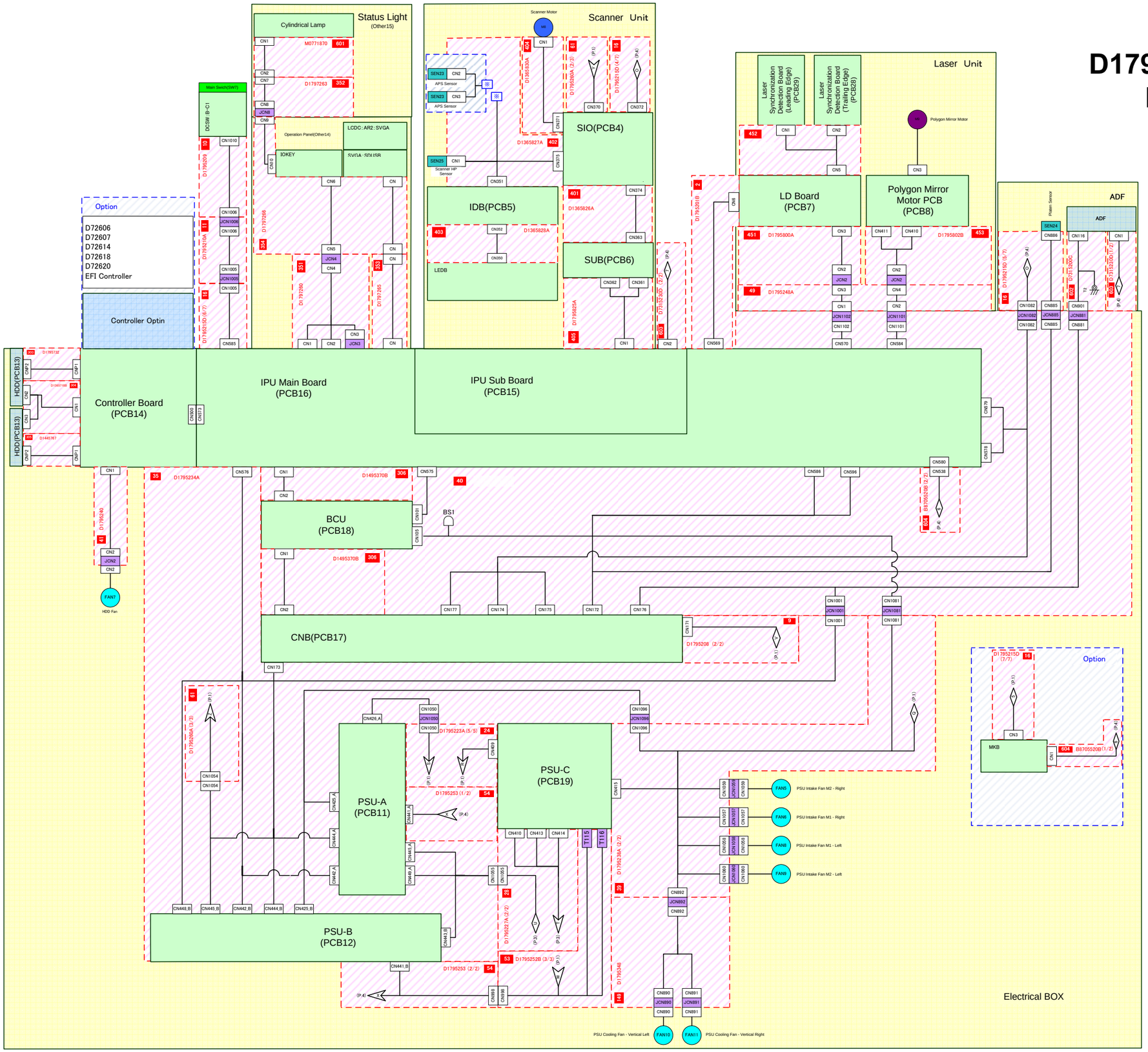

Pin Assignment

harness No	Connector (FROM) To Connector	No	Pin No	Signal Information: Signal Name	Direction	L	H	Connector (TO) No	Pin No	To Connector
2	IPU	CN569	1	L0_RXM				1	CN6	LDB
			2	L0_RXP				2		
			3	-				3		
			4	L1_RXM				4		
			5	L1_RXP				5		
			shell	-				shell		
3	IOB: Relay CN1094	CN1094	1	Drum Cleaning Motor:24V2				8	CN1031	Drum Cleaning Motor
			2	Drum Cleaning Motor:GND				7		
			3	Drum Cleaning Motor:5V				6		
			4	Drum Cleaning Motor:START/STOP				5		
			5	Drum Cleaning Motor:CLOCK				4		
			6	Drum Cleaning Motor:CW/CCW				3		
			7	Drum Cleaning Motor:LOCK				2		
			8	Drum Cleaning Motor:Gain Change				1		
4	IOB: Relay CN887	CN1095	1	Thermistor:GND				2	CN877	Thermistor
			2	Thermistor				1		
14	IOB: Relay CN1088	CN1088	1	Sensor:GND				3	CN1040	Charge cleaner Position Sensor
			2	Sensor: Output				2		
			3	Sensor:5V				1		
6	IOB	CN214	1	Waste toner Bottle Set Sensor	INPUT	Set	Not Set	8	CN1090	Waste toner Bottle Set
			2	Waste toner Bottle Set Sensor:GND	Ground			7		
			3	Used Toner Bottle Near Full Sensor:GND	Ground			6		Used Toner Bottle Near Full Sensor
			4	Used Toner Bottle Near Full Sensor: Output	INPUT	Not Near Full	Near Full	5		
			5	Used Toner Bottle Near Full Sensor:5V	Power			4		
			6	Waste Toner Bottle Full Sensor:GND	Ground			3		Waste Toner Bottle Full Sensor
			7	Waste Toner Bottle Full Sensor: Output	INPUT	Full	Not Full	2		
			8	Waste Toner Bottle Full Sensor:5V	Power			1		
			9	Key Counter:GND	Ground			4	CN1042	Key Counter
			10	Key Counter:SET	INPUT	Set	Not Set	3		
			11	Key Counter:24V	Power			2		
			12	Key Counter:ON	OUTPUT	Count UP	-	1		
			13	ITB Environmental correction Temperature/Humidity Sensor:Thermostat Terminals	INPUT			4	CN1015	ITB Environmental correction Temperature/Humidity Sensor
			14	ITB Environmental correction Temperature/Humidity Sensor:GND	Ground			3		
			15	ITB Environmental correction Temperature/Humidity Sensor:Humidity Output	INPUT			2		
			16	ITB Environmental correction Temperature/Humidity Sensor:5V	Power			1		
			17	Used Toner Bottle Motor:Gain Change	OUTPUT	Number of revolution	Number of revolutions -	8	CN986	Used Toner Bottle Motor
			18	Used Toner Bottle Motor:CLK	OUTPUT			7		
			19	Used Toner Bottle Motor:LOCK	INPUT	ON (Rated)	ON (Rated)	6		
			20	Used Toner Bottle Motor:START/STOP	OUTPUT	ON	OFF	5		
			21	Used Toner Bottle Motor:GND	Ground			4		
			22	Used Toner Bottle Motor:GND	Ground			3		
			23	Used Toner Bottle Motor:24VS	Power			2		
			24	Used Toner Bottle Motor:24VS	Power			1		
7	IOB: Relay CN1090	CN1090	1	Waste toner Bottle Set Sensor				2	CN985	Waste toner Bottle Set
			2	Waste toner Bottle Set Sensor:GND				1		
			3	Used Toner Bottle Near Full Sensor:GND				3	CN987	Used Toner Bottle Near Full Sensor
			4	Used Toner Bottle Near Full Sensor: Output				2		
			5	Used Toner Bottle Near Full Sensor:5V				1		
			6	Waste Toner Bottle Full Sensor:GND				3	CN989	Waste Toner Bottle Full Sensor
			7	Waste Toner Bottle Full Sensor: Output				2		
			8	Waste Toner Bottle Full Sensor:5V				1		
8	IOB	CN206	1	Toner chuck O/C Sensor 2	INPUT	Close	Open	50	CN300	RYB
			2	Toner chuck O/C Sensor 1	INPUT	Close	Open	49		
			3	Toner Bottle Sensor2	INPUT	Detect	Not Detect	48		
			4	Toner Bottle Sensor1	INPUT	Detect	Not Detect	47		
			5	Toner chuck Motor 2(H Bridge)Control B	OUTPUT			46		
			6	Toner chuck Motor 2(H Bridge) Control A	OUTPUT			45		
			7	Toner chuck Motor 1(H Bridge) Control B	OUTPUT			44		
			8	Toner chuck Motor 1(H Bridge) Control A	OUTPUT			43		
			9	Rear Fence Drive Motor (H Bridge) Control B	OUTPUT			42		
			10	Rear Fence Drive Motor (H Bridge) Control A	OUTPUT			41		
			11	3rd Tray Lift Paper Height Sensor2	OUTPUT			40		
			12	3rd Tray Lift Paper Height Sensor1	OUTPUT			39		
			13	3rd Tray Lift Motor (H Bridge) Control B	OUTPUT			38		
			14	3rd Tray Lift Motor (H Bridge) Control A	OUTPUT			37		
			15	2nd Tray Lift Paper Height Sensor2	OUTPUT			36		
			16	2nd Tray Lift Paper Height Sensor1	OUTPUT			35		
			17	2nd Tray Lift Motor (H Bridge) Control B	OUTPUT			34		
			18	2nd Tray Lift Motor (H Bridge) Control A	OUTPUT			33		
			19	1st Tray Lift Motor (H Bridge) Control B	OUTPUT			32		
			20	1st Tray Lift Motor (H Bridge) Control A	OUTPUT			31		
			21	Toner Bottle Motor2:Lock Sensor	INPUT			30		
			22	Toner Bottle Motor2:Drive	OUTPUT	Drive	OFF	29		
			23	Toner Bottle Motor1:Lock Sensor	INPUT			28		
			24	Toner Bottle Motor1:Drive	OUTPUT	ON	OFF	27		
			25	RYB Motor Driver :Error	OUTPUT	Trouble	Normal	26		
			26	RYB RESET	OUTPUT	OFF	ON	25		
			27	Bank Exit Motor:Current switching	OUTPUT	ON	OFF	24		
			28	Bank Exit Motor:Enable	OUTPUT	Normal	Sleep	23		
			29	Bank Exit Motor:CLK	OUTPUT			22		
			30	Vertical Transport Motor:Current switching	OUTPUT	ON	OFF	21		
			31	Vertical Transport Motor:Enable	OUTPUT	Normal	Sleep	20		
			32	Vertical Transport Motor:CLK	OUTPUT			19		
			33	Paper Transport Motor - Tray 3:Current switching	OUTPUT	ON	OFF	18		
			34	Paper Transport Motor - Tray 3:Enable	OUTPUT	Normal	Sleep	17		
			35	Paper Transport Motor - Tray 3:CLK	OUTPUT			16		
			36	Paper Feed Motor - Tray 3:Current switching	OUTPUT	ON	OFF	15		
			37	Paper Feed Motor - Tray 3:Enable	OUTPUT	Normal	Sleep	14		
			38	Paper Feed Motor - Tray 3:CLK	OUTPUT			13		
			39	Paper Transport Motor - Tray 2:Current switching	OUTPUT	ON	OFF	12		
			40	Paper Transport Motor - Tray 2:Enable	OUTPUT	Normal	Sleep	11		
			41	Paper Transport Motor - Tray 2:CLK	OUTPUT			10		
			42	Paper Feed Motor - Tray 2:Current switching	OUTPUT	ON	OFF	9		
			43	Paper Feed Motor - Tray 2:Enable	OUTPUT	Normal	Sleep	8		
			44	Paper Feed Motor - Tray 2:CLK	OUTPUT			7		

harness No	Connector (FROM) To Connector	No	Pin No	Signal Information: Signal Name	Direction	L	H	Connector (TO) No	Pin No	To Connector
8			45	Paper Transport Motor - Tray 1:Current switching	OUTPUT	ON	OFF	6		
			46	Paper Transport Motor - Tray 1:Enable	OUTPUT	Normal	Sleep	5		
			47	Paper Transport Motor - Tray 1:CLK	OUTPUT			4		
			48	Paper Feed Motor - Tray 1:Current switching	OUTPUT	ON	OFF	3		
			49	Paper Feed Motor - Tray 1:Enable	OUTPUT	Normal	Sleep	2		
			50	Paper Feed Motor - Tray 1:CLK	OUTPUT			1		
	IOB	CN207	1	3rd Tray Set Sensor SW	INPUT	Set	Not Set	40	CN301	RYB
			2	2nd Tray Set Sensor SW	INPUT	Set	Not Set	39		
			3	3rd Tray Size SensorSW5	INPUT	Set	Not Set	38		
			4	3rd Tray Size SensorSW4	INPUT	Set	Not Set	37		
			5	3rd Tray Size SensorSW3	INPUT	Set	Not Set	36		
			6	3rd Tray Size SensorSW2	INPUT	Set	Not Set	35		
			7	3rd Tray Size SensorSW1	INPUT	Set	Not Set	34		
			8	2nd Tray Size SensorSW5	INPUT	Set	Not Set	33		
			9	2nd Tray Size SensorSW4	INPUT	Set	Not Set	32		
			10	2nd Tray Size SensorSW3	INPUT	Set	Not Set	31		
			11	2nd Tray Size SensorSW2	INPUT	Set	Not Set	30		
			12	2nd Tray Size SensorSW1	INPUT	Set	Not Set	29		
			13	Tandem Tray Set Sensor - Right	INPUT	Set	Not Set	28		
			14	Tandem Tray Set Sensor - Left	INPUT	Set	Not Set	27		
			15	Right Tray Paper Set Sensor	INPUT	Not Detect	Detect	26		
			16	Paper Height Sensor4	INPUT	Not position 4	Bottom position	25		
			17	Paper Height Sensor3	INPUT	Not position 3	Bottom position	24		
			18	Paper Height Sensor2	INPUT	Not position 2	Bottom position	23		
			19	Paper Height Sensor1	INPUT	Not position 1	Bottom position	22		
			20	Rear Side Fence Close Sensor	INPUT	Not Closed	Open	21		
			21	Rear Side Fence Open Sensor	INPUT	Not Closed	Open	20		
			22	Front Side Fence Close Sensor	INPUT	Not Closed	Open	19		
			23	Front Side Fence Open Sensor	INPUT	Not Closed	Open	18		
			24	Lower Limit Sensor	INPUT	Not Upper Limit position	Upper Limit position	17		
			25	Left Tray Paper Sensor	INPUT	Detect	Not Detect	16		
			26	Rear Fence Return Sensor	INPUT	Not Stated position	Stated position	15		
			27	Rear Fence HP Sensor	INPUT	Not Home position	Home position	14		
			28	3rd Tray Paper Upper Limit Sensors	INPUT	Not Detect	Detect	13		
			29	2nd Tray Paper Upper Limit Sensors	INPUT	Not Detect	Detect	12		
			30	1st Tray Paper Upper Limit Sensors	INPUT	Not Detect	Detect	11		
			31	3rd Tray Paper End Sensor	INPUT	Detect	Not Detect	10		
			32	2nd Tray Paper End Sensor	INPUT	Detect	Not Detect	9		
			33	1st Tray Paper End Sensor	INPUT	Detect	Not Detect	8		
			34	Vertical Transport Sensor	INPUT	Detect	Not Detect	7		
			35	3rd Tray Transport Sensor	INPUT	Detect	Not Detect	6		
			36	2nd Tray Transport Sensor	INPUT	Detect	Not Detect	5		
			37	1st Tray Transport Sensor	INPUT	Detect	Not Detect	4		
			38	3rd Tray Feed Sensors	INPUT	Detect	Not Detect	3		
			39	2nd Tray Feed Sensors	INPUT	Detect	Not Detect	2		
			40	1st Tray Feed Sensors	INPUT	Detect	Not Detect	1		
	IOB	CN208	1	Motor Current switching(Sub)	OUTPUT			20	CN302	RYB
			2	DRB Set Sensor	INPUT	Not Set	Set	19		
			3	Purged Paper Sensor	INPUT	Not Detect	Detect	18		
			4	Open Signal(24VTN)	INPUT	Close	Open	17		
			5	24V2Power Sensor(PSU-C24V Line)	INPUT	24V2PowerON	24V2PowerOFF	16		
			6	24VS2Power Sensor(PSU-C24VS Line)	INPUT	24VS2PowerON	24VS2PowerOF	15		
			7	24VS1Power Sensor(PSU-A24VS Line)	INPUT	24VS1PowerON	24VS1PowerOF	14		
			8	5VPower Sensor1	INPUT	5VPowerON	5VPowerOFF	13		
			9	Open Signal(5VS)	INPUT	Close	Open	12		
			10	3rd Tray LED1:Drive	OUTPUT	LED Light	LED Extinction	11		
			11	2nd Tray LED1:Drive	OUTPUT	LED Light	LED Extinction	10		
			12	1st Tray LED1:Drive	OUTPUT	LED Light	LED Extinction	9		
			13	Rear Side Fence Open Solenoid:Drive	OUTPUT	ON	OFF	8		
			14	Front Side Fence Open Solenoid:Drive	OUTPUT	ON	OFF	7		
			15	Tray Lock Solenoid	OUTPUT	ON	OFF	6		
			16	Tandem Tray - Left Lock Solenoid	OUTPUT	ON	OFF	5		
			17	3rd Tray Pickup Solenoids:Drive	OUTPUT	ON	OFF	4		
			18	2nd Tray Pickup Solenoids:Drive	OUTPUT	ON	OFF	3		
			19	1st Tray Pickup Solenoids:Drive	OUTPUT	ON	OFF	2		
			20	Motor Current switching(Sub)	OUTPUT			1		
9	IOB	CN201	1	GND	Ground			1	CN171	CNB
			2	IOB_WS_N	INPUT			2		
			3	GND	Ground			3		
			4	IOB_RD_N	INPUT			4		
			5	GND	Ground			5		
			6	IOB_RD_WR_N	INPUT			6		
			7	IOB1_CS_N	INPUT			7		
			8	GND	Ground			8		
			9	IOB2_CS_N	INPUT			9		
			10	GND	Ground			10		
			11	IOB_D(24)	Bus			11		
			12	IOB_D(25)	Bus			12		
			13	IOB_D(26)	Bus			13		
			14	IOB_D(27)	Bus			14		
			15	IOB_D(28)	Bus			15		
			16	IOB_D(29)	Bus			16		
			17	IOB_D(30)	Bus			17		
			18	IOB_D(31)	Bus			18		
			19	IOB_A(0)	INPUT			19		
			20	IOB_A(1)	INPUT			20		
			37	IOB_A(18)	INPUT			37		
			38	IOB_A(19)	INPUT			38		
			39	IOB_A(20)	INPUT			39		
			40	IOB3_CS_N	INPUT			40		
			21	IOB_A(2)	INPUT			21		
			22	IOB_A(3)	INPUT			22		
			23	IOB_A(4)	INPUT			23		
			24	IOB_A(5)	INPUT			24		
			25	IOB_A(6)	INPUT			25		

harness No	Connector (FROM) To Connector	No	Pin No	Signal Information: Signal Name	Direction	L	H	Connector (TO) No	Pin No	To Connector
			26	IOB_A(7)	INPUT			26		
			27	IOB_A(8)	INPUT			27		
			28	IOB_A(9)	INPUT			28		
			29	IOB_A(10)	INPUT			29		
			30	IOB_A(11)	INPUT			30		
			31	IOB_A(12)	INPUT			31		
			32	IOB_A(13)	INPUT			32		
			33	IOB_A(14)	INPUT			33		
			34	IOB_A(15)	INPUT			34		
			35	IOB_A(16)	INPUT			35		
			36	IOB_A(17)	INPUT			36		
10	IPU: Relay CN1006	CN1006	1	DCSW Output				2	CN1010	DCSW
			2	GND				1		
11	IPU: Relay CN1005	CN1005	1	DCSW Output				2	CN1006	DCSW
			2	GND				1		
12	IOB	CN222	1	GND	Ground			16	CN1004	NC

harness No	Connector (FROM) To Connector	No	Pin No	Signal Information: Signal Name	Direction	L	H	Connector (TO) No	Pin No	To Connector
16	IOB: Relay CN1089	CN1089	1	Charge cleaner Position Sensor:GND				3	CN1088	Charge cleaner Position Sensor
			2	Charge cleaner Position Sensor: Output				2		
			3	Charge cleaner Position Sensor:5V				1		
			4	Laser Cooling Fan:24V				3	CN996	Laser Cooling Fan
			5	Laser Cooling Fan:Lock Sensor				2		
			6	Laser Cooling Fan:GND				1		
			7	PCDU Temperature/Humidity Sensor:Thermistor Terminals				4	CN1085	PCDU Temperature/Humidity
			8	PCDU Temperature/Humidity Sensor:GND(Thermistor)				3		
			9	PCDU Temperature/Humidity Sensor:Humidity Output				2		
			10	PCDU Temperature/Humidity Sensor:5V				1		
			11	Drum Cleaning Lubricant Detect:GND				4	CN1009	Drum Cleaning Lubricant Detect
			12	Drum Cleaning Lubricant Detect				3		Drum Cleaning Set Sensor
			13	Drum Cleaning Set Sensor:GND				2		
			14	Drum Cleaning Set Sensor				1		
	IOB: Relay CN1013	CN1103	1	Drum Potential Sensor:24VS				4	CN1008	Drum Potential Sensor
			2	Drum Potential Sensor: Output				3		
			3	Drum Potential Sensor:GND				2		

			2	TD Sensor SCL	OUTPUT			15		TD Sensor
			3	TD Sensor SDA	OUTPUT			14		
			4	TD Sensor Vcnt	OUTPUT			13		
			5	TD Sensor Vcc(+5V)	OUTPUT			12		
			6	TD Sensor Vout	INPUT			11		
			7	TD Sensor GND	Ground			10		
			8	PCL VAA(+24V)	Power			9		PCL
			9	GND	Ground			8		NC
			10	Development Roller Rotation Sensor +5V	Power			7		
			11	Development Roller Rotation Sensor Output Signal	OUTPUT	Not Detect	Detect	6		
			12	Development Roller Rotation Sensor GND	Ground			5		
			13	NC				4		
			14	Development Unit Set Sensor	INPUT	Set	Not Set	3		
			15	Development Unit Set Sensor:GND	Ground			2		
			16	PCL:Drive	OUTPUT			1		PCL
			17	Development Motor:GND	Ground			10	CN991	Development Motor
			18	Development Motor:5V	Power			9		
			19	Development Motor:Gain Change	OUTPUT	Number of revolution sa,b	Number of revolutionsc,x	8		
			20	Development Motor:CLOCK	OUTPUT			7		
			21	Development Motor:LOCK	OUTPUT	ON (Rated)	OFF	6		
			22	Development Motor:STRT/STOP	OUTPUT	ON	OFF	5		
			23	Development Motor:GND	Ground			4		
			24	Development Motor:GND	Ground			3		
			25	Development Motor:24V2	Power			2		
			26	Development Motor:24V2	Power			1		
			27	NC				-	-	NC
			28	NC						
			29	NC						
			30	NC						
			31	NC						
			32	NC						
IOB	CN224		1	Drum Motor:CW/CCW	OUTPUT	CCW	CW	11	CN1030	Drum Motor
			2	NC				10		
			3	NC				9		
			4	Drum Motor:Gain Change	OUTPUT	Number of revolution sa,b	Number of revolution sc,x	8		
			5	Drum Motor:CLOCK	OUTPUT			7		
			6	Drum Motor:LOCK	INPUT	ON (Rated)	OFF	6		
			7	Drum Motor:START/STOP	OUTPUT	ON	OFF	5		
			8	Drum Motor:GND	Ground			4		
			9	Drum Motor:GND	Ground			3		
			10	Drum Motor:24VS	Power			2		
			11	Drum Motor:24VS	Power			1		
			12	Drum Cleaning Motor:24VS	Power			8	CN1094	Drum Cleaning Motor
			13	Drum Cleaning Motor:GND	Ground			7		
			14	Drum Cleaning Motor:5V	Power			6		
			15	Drum Cleaning Motor:START/STOP	OUTPUT	ON	OFF	5		
			16	Drum Cleaning Motor:CLOCK	OUTPUT			4		
			17	Drum Cleaning Motor:CW/CCW	OUTPUT	CCW	CW	3		
			18	Drum Cleaning Motor:LOCK	INPUT	ON (Rated)	OFF	2		
			19	Drum Cleaning Motor:Gain Change	OUTPUT	Number of revolutions -	Number of revolution sa,b,c,x	1		
			20	NC				-	-	NC
			21	Thermostat:GND	Ground			2	CN877	Thermostat
			22	Thermostat	INPUT			1		
			23	ITB/PTR Drive Motor:Gain Change	OUTPUT	Number of revolution sa,b	Number of revolution sc,x	12	CN1032	ITB/PTR Drive Motor
			24	ITB/PTR Drive Motor:CLOCK	OUTPUT			11		
			25	N.C.(Brake)	N			10		
			26	ITB/PTR Drive Motor:CW/CCW	OUTPUT	CCW	CW	9		
			27	ITB/PTR Drive Motor:START/STOP	OUTPUT	ON	OFF	8		
			28	ITB/PTR Drive Motor:LOCK	INPUT	ON (Rated)	OFF	7		
			29	ITB/PTR Drive Motor:GND	Ground			6		
			30	ITB/PTR Drive Motor:GND	Ground			5		
			31	ITB/PTR Drive Motor:GND	Ground			4		
			32	ITB/PTR Drive Motor:24VS	Power			3		
			33	ITB/PTR Drive Motor:24VS	Power			2		
			34	ITB/PTR Drive Motor:24VS	Power			1		
			35	NC				-	-	NC
			36	NC				-		
			37	NC				-		
			38	NC				-		
13	IOB	CN219	1	Charge cleaner Motor :COM	Power			7	CN1021	Charge cleaner Motor
			2	Charge cleaner Motor :COM	Power			6		
			3	NC				5		
			4	Charge cleaner Motor :A Phase	OUTPUT			4		
			5	Charge cleaner Motor :-A Phase	OUTPUT			3		
			6	Charge cleaner Motor :B Phase	OUTPUT			2		
			7	Charge cleaner Motor :-B Phase	OUTPUT			1		
			8	Toner Feed Motor:A Phase	OUTPUT			6	CN1022	Toner Feed Motor
			9	Toner Feed Motor:COM	Power			5		
			10	Toner Feed Motor:-A Phase	OUTPUT			4		
			11	Toner Feed Motor:B Phase	OUTPUT			3		
			-	NC				2		
			12	Toner Feed Motor:-B Phase	OUTPUT			1		
			13	Toner Agitator Motor:A Phase	OUTPUT			6	CN1023	Toner Agitator Motor
			14	Toner Agitator Motor:COM	Power			5		
			15	Toner Agitator Motor:-A Phase	OUTPUT			4		
			16	Toner Agitator Motor:B Phase	OUTPUT			3		
			-	NC				2		
			17	Toner Agitator Motor:-B Phase	OUTPUT			1		

harness No	Connector (FROM) To Connector	No	Pin No	Signal Information Signal Name	Direction	L	H	Connector (TO) No	Pin No	To Connector
16			13	Original Size Sensor2				21		
			14	Original Size Sensor3				20		
			15	Original Size Sensor4				19		
			16	Original Size Sensor5				18		
			17	Original Size Sensor ON Signal				17		
			18	GND				16		
			19	Exposure LED ON Signal				15		
			20	LED Error Signal				14		
			21	GND				13		
			22	Scanner Power ON Signal				12		
	CNB: Relay	CN885	1	Platen Sensor:GND				3	CN886	DF Open/Close Sensor
			2	Platen Sensor:Vout				2		
	CN885		3	Platen Sensor:Vcc				1		
	IPU	CN585	1	DCSW Output	OUTPUT			2	CN1005	DCSW
			2	GND	Ground			1		
	IOB: Relay	CN1042	1	Key Counter:GND				4	CN1040	Key Counter
			2	Key Counter:SET				3		
	CN1042		3	Key Counter:24V				2		
			4	Key Counter:ON				1		
	IOB	CN213	1	MKB:+5V	Power			13	CN3	MKB
			2	MKB: Set Sensor	INPUT	Set	Not Set	12		
			3	MKB:b0(Size)	OUTPUT			11		
			4	MKB:b1(Size)	OUTPUT			10		
			5	MKB:b2(Size)	OUTPUT			9		
			6	MKB:b3(Size)	OUTPUT			8		
			7	MKB:b4(Mode)	OUTPUT			7		
			8	MKB:b5(Mode)	OUTPUT			6		
			9	MKB:b6(Duplex)	OUTPUT	Reverse		5		
			10	MKB:b7(Motor)	OUTPUT	Motor ON		4		
			11	MKB:GND	Ground			3		
			12	MKB:Control	OUTPUT			2		

			4	Drum Potential Sensor:GND				1		
16	IOB	CN220	1	Right Intake Fan - Front:24VS	Power			12	CN1019	Right Intake Fan - Front
			2	Right Intake Fan - Front:Lock Sensor	INPUT	ON	OFF	11		
			3	Right Intake Fan - Front:GND	Ground			10		
			4	Right Intake Fan - Front:Speed switching	OUTPUT			9		
			5	Right Intake Fan - Center:24VS	Power			8		Right Intake Fan - Center
			6	Right Intake Fan - Rear:Lock Sensor	INPUT	ON	OFF	7		Right Intake Fan - Rear
			7	Right Intake Fan - Rear:GND	Ground			6		
			8	Right Intake Fan - Rear:Speed switching	OUTPUT			5		
			9	Right Intake Fan - Rear:24VS2	Power			4		
			10	Right Intake Fan - Center:Lock Sensor	INPUT	ON	OFF	3		Right Intake Fan - Center
			11	Right Intake Fan - Center:GND	Ground			2		
			12	Right Intake Fan - Center:Speed switching	OUTPUT			1		
			13	Ozone Intake Fan:24V	Power			4	CN971	Ozone Intake Fan
			14	Ozone Intake Fan:Lock Sensor	INPUT	ON	OFF	3		
			15	Ozone Intake Fan:GND	Ground			2		
			16	Ozone Intake Fan:PWM	OUTPUT			1		
			17	Toner empty Sensor:GND	Ground			4	CN972	Toner empty Sensor
			18	Toner empty Sensor: Output	INPUT	Not Detect	Detect	3		
			19	Toner empty Sensor:5V	Power			2		
			20	NC				1		
			21	Charge cleaner Position Sensor:GND	Ground			14	CN1089	Charge cleaner Position Sensor
			22	Charge cleaner Position Sensor: Output	INPUT	Not Cleaner Home position	Cleaner Home position	13		
			23	Charge cleaner Position Sensor:5V	Power			12		
			24	Laser Cooling Fan:24V	Power			11		Laser Cooling Fan
			25	Laser Cooling Fan:Lock Sensor	INPUT	ON	OFF	10		
			26	Laser Cooling Fan:GND	Ground			9		
			27	PCDU Temperature/Humidity Sensor:Thermistor Terminals	INPUT			8		PCDU Temperature/Humidity
			28	PCDU Temperature/Humidity Sensor:GND(Thermistor)	Ground			7		
			29	PCDU Temperature/Humidity Sensor:Humidity Output	INPUT			6		
			30	PCDU Temperature/Humidity Sensor:5V	Power			5		
			31	Drum Cleaning Lubricant Detect:GND	Ground			4		Drum Cleaning Lubricant Detect
			32	Drum Cleaning Lubricant Detect	INPUT	Detect	Not Detect	3		
			33	Drum Cleaning Set Sensor:GND	Ground			2		Drum Cleaning Set Sensor
			34	Drum Cleaning Set Sensor	INPUT	Set	Not Set	1		
			35	Drum Potential Sensor:24VS	Power			4	CN1103	
			36	Drum Potential Sensor: Output	INPUT			3		
			37	Drum Potential Sensor:GND	Ground			2		
			38	Drum Potential Sensor:GND	Ground			1		
			39	NC				-	-	NC
			40	NC				-	-	
	RYB: Relay	CN632	1	NC				-	-	NC
			2	Toner Bottle Motor - Left				2	CN1039	Toner Bottle Motor - Left
	CN632		3	Toner Bottle Motor - Left:+24V				1		
			4	Toner Bottle Chuck O/C Sensor - Left:GND				3	CN1036	Toner Bottle Chuck O/C Sensor - Left
			5	Toner Bottle Chuck O/C Sensor - Left:: Output				2		
			6	Toner Bottle Chuck O/C Sensor - Left:5V				1		
			7	Toner Bottle Sensor - Left:GND				5	CN1034	Toner Bottle Sensor - Left
			8	Toner Bottle Sensor - Left: Output				4		
			9	Toner Bottle Sensor - Left:5V				3		Bottle Inner Cap Motors - Left
			10	Bottle Inner Cap Motors - Left:H Bridge (Regular)				2		
			11	Bottle Inner Cap Motors - Left:H Bridge (Reverse)				1		
			12	Toner Bottle Motor - Right				2	CN1038	Toner Bottle Motor - Right
			13	Toner Bottle Motor - Right:+24V				1		
			14	Toner Bottle Chuck O/C Sensor - Right:GND				3	CN1037	Toner Bottle Chuck O/C Sensor - Right
			15	Toner Bottle Chuck O/C Sensor - Right:: Output				2		
			16	Toner Bottle Chuck O/C Sensor - Right:5V				1		
			17	Toner Bottle Sensor - Right:GND				5	CN1033	Toner Bottle Sensor - Right
			18	Toner Bottle Sensor - Right: Output				4		
			19	Toner Bottle Sensor - Right:5V				3		
			20	Bottle Inner Cap Motors - Right:H Bridge (Regular)				2		Bottle Inner Cap Motors -
			21	Bottle Inner Cap Motors - Right:H Bridge (Reverse)				1		
			22	NC				-	-	NC
	IOB	CN225	1	Testing For Fusing RLY Drive	INPUT			4		
			2	T24V	Power			3		
			3	Testing For AC Junction Gate RLY Drive	INPUT			2		
			4	T5V	Power			1		
			5	LCT PCB side (⇒Condenser⇒GND)	Ground			9	CN742	LCT
			6	LCT PCB side (⇒Condenser⇒GND)	Ground			8		
			7	LCT PCB side (⇒Condenser⇒GND)	Ground			7		
			8	LCT RXD2	INPUT			6		
			9	GND	Ground			5		
			10	LCT TXD2	OUTPUT			4		
			11	LCT RXD1	INPUT			3		
			12	GND	Ground			2		
			13	LCT TXD1	OUTPUT			1		
	IPU: Relay	CN1082	1	HP Sensor				11	CN372	SIO
			2	Scanner Motor Standard Voltage Switch3 Signal				10		
	CN1082		3	Scanner Motor Standard Voltage Switch2 Signal				9		
			4	Scanner Motor Standard Voltage Switch1 Signal				8		
			5	Scanner Motor Reset Signal				7		
			6	Scanner Motor Direction of rotation Switch Signal				6		
			7	Scanner Motor Clock Signal				5		
			8	Scanner Motor Excitation Mode Switch2 Signal				4		
			9	Scanner Motor Excitation Mode Switch1 Signal				3		
			10	Scanner Motor Enable Signal				2		
			11	NC				1		
			12	Original Size Sensor1				22		

harness No	Connector (FROM) To Connector	No	Pin No	Signal Information Signal Name	Direction	L	H	Connector (TO) No	Pin No	To Connector
19	IOB	CN209	1	NC				50	CN281	EDRB
			2	NC				49		
			3	NC				48		
			4	NC				47		
			5	NC				46		
			6	NC				45		
			7	NC				44		
			8	NC				43		
			9	Fusing Transport Exhaust Fan:LOCK	INPUT	ON	OFF	42		
			10	Fusing Transport Exhaust Fan:Drive	OUTPUT	ON	OFF	41		
			11	Fusing Exhaust Fan under:LOCK	INPUT	ON	OFF	40		
			12	Fusing Exhaust Fan under:Drive	OUTPUT	ON	OFF	39		
			13	Fusing Exhaust Fan upper:LOCK	INPUT	ON	OFF	38		
			14	Fusing Exhaust Fan upper:Drive	OUTPUT	ON	OFF	37		
			15	Exit Exhaust Fan - Right Rear:LOCK	INPUT	OFF	ON	36		
			16	Exit Exhaust Fan - Right Rear:Speed switching	OUTPUT	ON (Half speed)	OFF (Half	35		
			17	Exit Exhaust Fan - Right Rear:Drive	OUTPUT	ON (Full speed)	OFF (Full	34		
			18	Exit Exhaust Fan - Left Rear:LOCK	INPUT	OFF	ON	33		
			19	Exit Exhaust Fan - Left Rear:Speed switching	OUTPUT	ON (Half speed)	OFF (Half	32		
			20	Exit Exhaust Fan - Left Rear:Drive	OUTPUT	ON (Full speed)	OFF (Full	31		
			21	Fusing Cooling Fan - Right Rear:LOCK	INPUT	OFF	ON	30		
			22	Fusing Cooling Fan - Right Rear:Speed switching	OUTPUT	ON (Half speed)	OFF (Half	29		
			23	Fusing Cooling Fan - Right Rear:Drive	OUTPUT	ON (Full speed)	OFF (Full	28		
			24	Fusing Cooling Fan - Left Rear:LOCK	INPUT	OFF	ON	27		
			25	Fusing Cooling Fan - Left Rear:Speed switching	OUTPUT	ON (Half speed)	OFF (Half	26		
			26	Fusing Cooling Fan - Left Rear:Drive	OUTPUT	ON (Full speed)	OFF (Full	25		
			27	Duplex Lower Cooling Fan - Rear:LOCK	INPUT	ON	OFF	24		
			28	Duplex Lower Cooling Fan - Rear:Drive	OUTPUT	ON	OFF	23		
			29	Duplex Lower Cooling Fan - Front:LOCK	INPUT	ON	OFF	22		
			30	Duplex Lower Cooling Fan - Front:Drive	OUTPUT	ON	OFF	21		
			31	HP Cooling Exhaust Fan:LOCK	INPUT	ON	OFF	20		

			13	MKB:+24V_CNT	Power			1		
18	RYB: Relay	CN1033	1	Toner Bottle Sensor:GND				3	CN978	Toner Bottle Sensor
			2	Toner Bottle Sensor: Output				2		
	CN1033		3	Toner Bottle Sensor:5V				1		
	CN1034		4	Bottle Inner Cap Motors:H Bridge (Regular)				2	CN976	Bottle Inner Cap Motors
			5	Bottle Inner Cap Motors:H Bridge (Reverse)				1		
19	IOB	CN221	1	Charge, Grid, Bias Power Pack (CGB):B Trouble Sensor Signal	INPUT	Not Detect	Detect	12	CN151	Charge, Grid, Bias Power Pack (CGB)
			2	Charge, Grid, Bias Power Pack (CGB):B Output Control Signal	OUTPUT			11		
			3	Charge, Grid, Bias Power Pack (CGB):G Trouble Sensor Signal	INPUT	Not Detect	Detect	10		
			4	Charge, Grid, Bias Power Pack (CGB):G Output Control Signal	OUTPUT			9		
			5	Charge, Grid, Bias Power Pack (CGB):C2Trouble Sensor Signal	INPUT	Not Detect	Detect	8		
			6	Charge, Grid, Bias Power Pack (CGB):C2 Output Control Signal	OUTPUT			7		
			7	Charge, Grid, Bias Power Pack (CGB):C1Trouble Sensor Signal	INPUT	Not Detect	Detect	6		
			8	Charge, Grid, Bias Power Pack (CGB):C1 Output Control Signal	OUTPUT			5		
			9	Charge, Grid, Bias Power Pack (CGB):GND	Ground			4		
			10	Charge, Grid, Bias Power Pack (CGB):GND	Ground			3		
			11	Charge, Grid, Bias Power Pack (CGB):+24VSPower	Power			2		
			12	Charge, Grid, Bias Power Pack (CGB):+24VSPower	Power			1		
			13	Fusing Motor:CCW/CW	OUTPUT	CW	CCW	6	CN1048	Fusing Motor
			14	Fusing Motor:LOCK	INPUT	OFF	ON (Rated)	5		
			15	Fusing Motor:Brake	OUTPUT		Short Brake	4		
			16	Fusing Motor:START/STOP	OUTPUT	ON	OFF	3		
			17	Fusing Motor:CLK	OUTPUT			2		
			18	Fusing Motor:GND	Ground			1		
			19	NC	N			-	-	NC
			20	868306	Power			5	CN992	Development Cooling Fan - Rear
			21	Development Cooling Fan - Rear:Lock Sensor	INPUT	ON	OFF	4		
			22	Development Cooling Fan - Rear:GND	Ground			3		
			23	Development Cooling Fan - Rear:Speed switching	OUTPUT			2		
	-	-	NC		N			1		NC
	IOB	CN221	24	Ozone Vent Fan:24V	Power			4	CN993	Ozone Vent Fan
			25	Ozone Vent Fan:Lock Sensor	INPUT	ON	OFF	3		
			26	Ozone Vent Fan:GND	Ground			2		
			27	Ozone Vent Fan:PWM	OUTPUT			1		
			28	Used Toner Collection Lock Sensor:GND	Ground			3	CN984	Used Toner Collection Lock Sensor
			29	Used Toner Collection Lock Sensor: Output	INPUT	Lock	Unlock	2		
			30	Used Toner Collection Lock Sensor:5V	Power			1		
			31	Used Toner Collection Motor:Gain Change	OUTPUT	Number of revolution	Number of revolutions -	8	CN983	Used Toner Collection Motor
			32	Used Toner Collection Motor:CLK	OUTPUT			7		
			33	Used Toner Collection Motor:LOCK	INPUT	ON (Rated)	OFF	6		
			34	Used Toner Collection Motor:START/STOP	OUTPUT	ON	OFF	5		
			35	Used Toner Collection Motor:GND	Ground			4		
			36	Used Toner Collection Motor:GND	Ground			3		
			37	Used Toner Collection Motor:24VS	Power			2		
			38	Used Toner Collection Motor:24VS	Power			1		
	IOB	CN223	1	NC				12	CN1070	Thermopile (Heating Roller End) Spread Size
			2	Thermopile (Heating Roller End) Spread Size:5VL	Power			11		
			3	Thermopile (Heating Roller End) Spread Size:GND	Ground			10		
			4	Thermopile (Heating Roller End) Spread Size: Sensor Output	INPUT			9		
			5	NC				8		Thermopile (Heating Roller End)
			6	Thermopile (Heating Roller End) :5VL	Power			7		
			7	Thermopile (Heating Roller End) :GND	Ground			6		
			8	Thermopile (Heating Roller End) : Sensor Output	INPUT			5		
			9	NC				4		Thermopile (Heating Roller Center)
			10	Thermopile (Heating Roller Center) :5VL	Power			3		
			11	Thermopile (Heating Roller Center) :GND	Ground			2		
			12	Thermopile (Heating Roller Center) : Sensor Output	INPUT			1		
			13	Development Cooling Fan - Front:24V	Power			24		Development Cooling Fan - Front
			14	Development Cooling Fan - Front:Lock Sensor	INPUT	ON	OFF	23		
			15	Development Cooling Fan - Front:GND	Ground			22		
			16	Development Cooling Fan - Front:Speed switching	OUTPUT			21		
			17	Belt Cleaning Cooling Fan:24V	Power			20		Belt Cleaning Cooling Fan
			18	Belt Cleaning Cooling Fan:Rotation Sensor	INPUT	ON	OFF	19		
			19	Belt Cleaning Cooling Fan:Drive	OUTPUT			18		
			20	NC				17		NC
			21	NC				16		
			22	NC				15		
			23	NC				14		
			24	NC				13		

harness No	Connector (FROM) To Connector	No	Pin No	Signal Information Signal Name	Direction	L	H	Connector (TO) No	Pin No	To Connector
22	IOB: Relay	CN1070	17	Belt Cleaning Cooling Fan:24V				3	CN992	Belt Cleaning Cooling Fan
			18	Belt Cleaning Cooling Fan:Lock Sensor				2		
	CN170		19	Belt Cleaning Cooling Fan:GND				1		
			20	NC				-	-	NC
			21	NC						
			22	NC						
			23	NC						
			24	NC						
23	IOB: Relay	CN880	1	N.C (Thermistor Output)				4	CN1090	Thermopile (Heating Roller End) Spread Size
			2	Thermopile (Heating Roller End) Spread Size:5VL				3		
	CN880		3	Thermopile (Heating Roller End) Spread Size:GND				2		
			4	Thermopile (Heating Roller End) Spread Size: Sensor Output				1		
			5	N.C (Thermistor Output)				4	CN1091	Thermopile (Heating Roller End)
			6	Thermopile (Heating Roller End) :5VL				3		
			7	Thermopile (Heating Roller End):GND				2		
			8	Thermopile (Heating Roller End):Sensor Output				1		
			9	N.C (Thermistor Output)				4	CN1092	Thermopile (Heating Roller Center)
			10	Thermopile (Heating Roller Center) :5VL				3		
			11	Thermopile (Heating Roller Center) :GND				2		
			12	Thermopile (Heating Roller Center) : Sensor Output				1		
24	IOB	CN215	1	Decurler upper/under Switching Motor: Excitation switching	OUTPUT	2 Phase Excitation	1-2 Phase Excitation	19	CN50	Decurler Lift Motor
			2	Decurler upper/under Switching Motor:ERR	INPUT	Normal	Trouble	18		
			3	Decurler upper/under Switching Motor: Current switching	OUTPUT	ON	OFF	17		
			4	Decurler upper/under Switching Motor:Forward/Reverse	OUTPUT	CW	CCW	16		
			5	Decurler upper/under Switching Motor:CLK	OUTPUT			15		
			6	Decurler upper/under Switching Motor:Enable	OUTPUT	Normal	Sleep	14		
			7	Decurler Transport Motor:ERR	INPUT	Normal	Trouble	13		Decurler Transport Motor
			8	Decurler Transport Motor:Current switching	OUTPUT	ON	OFF	12		
			9	Decurler Transport Motor:Forward/Reverse	OUTPUT	CW	CCW	11		
			10	Decurler Transport Motor:CLK	OUTPUT			10		
			11	Decurler Transport Motor:Enable	OUTPUT	Normal	Sleep	9		
			12	Decurler Transport Motor_MODE	OUTPUT	2 Phase Excitation	1-2 Phase Excitation	8		
			13	Decurler Set Sensor	INPUT	Set	Not Set	7		Decurler Set Sensor
			14	Decurler Over-limit Sensor	INPUT	Normal	Over-limit	6		Decurler Over-limit Sensor
			15	Decurler HP Sensor	INPUT		Decurler HP	5		Decurler HP Sensor
			16	DDRB:GND	Ground			4		DDRB
			17	DDRB:Motor Reset	OUTPUT	OFF	ON	3		
			18	DDRB:GND	Ground			2		
			19	DDRB:5V	Power			1		
			20	NC				-	-	NC
			21	Total Counter:24V	Power			2	CN1086	Total Counter
			22	Total Counter:TRG	OUTPUT	Not Count UP	Count UP	1		
			23	Test Trigger(24V)	Power			19	CN1068	AC PCB
			24	Energy saving Trigger-	OUTPUT	Energy saving	Energy saving OFF	18		

			32	HP Cooling Exhaust Fan:Drive	OUTPUT	ON	OFF	19		
			33	HP Cooling Intake Fan:LOCK	INPUT	ON	OFF	18		
			34	HP Cooling Intake Fan:Drive	OUTPUT	ON	OFF	17		
			35	Fusing Release Rotation Sensor:FR	OUTPUT	CW	CCW	16		
			36	Fusing Release Rotation Sensor:REF	OUTPUT	ON	OFF	15		
			37	Fusing Release Rotation Sensor:CLK	OUTPUT			14		
			38	Fusing Release Rotation Sensor:EN	OUTPUT	Normal	Sleep	13		
			39	Duplex Invert Motor:FR	OUTPUT	CW	CCW	12		
			40	Duplex Invert Motor:REF	OUTPUT	ON	OFF	11		
			41	Duplex Invert Motor:CLK	OUTPUT			10		
			42	Duplex Invert Motor:EN	OUTPUT	Normal	Sleep	9		
			43	Exit Motor:LOCK	INPUT	ON (Rated)	OFF	8		
			44	Exit Motor:CLOCK	OUTPUT			7		
			45	Exit Motor:START/STOP	OUTPUT	ON	OFF	6		
			46	Exit Junction Gate HP Sensor	INPUT	Straight	Reversal	5		
			47	Exit Invert Junction Gate HP Sensor	INPUT	No Contact	Contact	4		
			48	Duplex Transport Sensor3	INPUT	Detect	Not Detect	3		
			49	Duplex Transport Sensor2	INPUT	Detect	Not Detect	2		
			50	Duplex Transport Sensor1	INPUT	Detect	Not Detect	1		
	IOB	CN210	1	NC				30	CN280	EDRB
			2	Duplex Invert Sensor	INPUT	Detect	Not Detect	29		
			3	Purge Relay Sensor	INPUT	Detect	Not Detect	28		
			4	Exit Invert Sensor	INPUT	Detect	Not Detect	27		
			5	Exit sensor	INPUT	Detect	Not Detect	26		
			6	Exit Junction Gate Sensor	INPUT	Detect	Not Detect	25		
			7	Invert Junction Gate Solenoid	OUTPUT	ON	OFF	24		
			8	Front HP Exhaust Fan:LOCK	INPUT	ON	OFF	23		
			9	Rear HP Exhaust Fan:Drive	OUTPUT	ON	OFF	22		
			10	Duplex Exit Drawer Set Sensor	INPUT	Set	Not Set	21		
			11	EDRB Motor Driver :Error	INPUT	Trouble	Normal	20		
			12	EDRB RESET	OUTPUT	OFF	ON	19		
			13	Duplex Transport Motor1:REF	OUTPUT	ON	OFF	18		
			14	Duplex Transport Motor1:CLK	OUTPUT			17		
			15	Duplex Transport Motor1:EN	OUTPUT	Normal	Sleep	16		
			16	Exit Junction Gate Motor :FR	OUTPUT	CW	CCW	15		
			17	Exit Junction Gate Motor :REF	OUTPUT	ON	OFF	14		
			18	Exit Junction Gate Motor :CLK	OUTPUT			13		
			19	Exit Junction Gate Motor :EN	OUTPUT	Normal	Sleep	12		
			20	Exit Invert Junction Gate Motor:FR	OUTPUT	CW	CCW	11		
			21	Exit Invert Junction Gate Motor:REF	OUTPUT	ON	OFF	10		
			22	Exit Invert Junction Gate Motor:CLK	OUTPUT			9		
			23	Exit Invert Junction Gate Motor:EN	OUTPUT	Normal	Sleep	8		
			24	Exit Invert Junction Gate Motor:FR	OUTPUT	CW	CCW	7		
			25	Exit Invert Junction Gate Motor:REF	OUTPUT	ON	OFF	6		
			26	Exit Invert Junction Gate Motor:CLK	OUTPUT			5		
			27	Exit Invert Junction Gate Motor:EN	OUTPUT	Normal	Sleep	4		
			28	Inverter Entrance Motor:REF	OUTPUT	ON	OFF	3		
			29	Inverter Entrance Motor:CLK	OUTPUT			2		
			30	Inverter Entrance Motor:EN	OUTPUT	Normal	Sleep	1		
21	IOB: Relay	CN1040	1	Key Counter:GND				4	CN1041	Key Counter
			2	Key Counter:SET				3		
	CN1040		3	Key Counter:24V				2		
			4	Key Counter:ON				1		
22	IOB: Relay	CN1070	1	N.C (Thermistor Output)				12	CN880	Thermopile (Heating Roller End) Spread Size
			2	Thermopile (Heating Roller End) Spread Size:5VL				11		
	CN170		3	Thermopile (Heating Roller End) Spread Size:GND				10		
			4	Thermopile (Heating Roller End) Spread Size: Sensor Output				9		
			5	N.C (Thermistor Output)				8		Thermopile (Heating Roller End)
			6	Thermopile (Heating Roller End) :5VL				7		
			7	Thermopile (Heating Roller End) :GND				6		
			8	Thermopile (Heating Roller End) : Sensor Output				5		
			9	N.C (Thermistor Output)				4		Thermopile (Heating Roller Center)
			10	Thermopile (Heating Roller Center) :5VL				3		
			11	Thermopile (Heating Roller Center) :GND				2		
			12	Thermopile (Heating Roller Center) :Sensor Output				1		
			13	Development Cooling Fan - Front:24V				5	CN995	Development Cooling Fan - Front
			14	Development Cooling Fan - Front:Lock Sensor				4		
			15	Development Cooling Fan - Front:GND				3		
			16	Development Cooling Fan - Front:Speed switching				2		
			-	NC				1		

harness No	Connector (FROM) To Connector	No	Pin No	Signal Information Signal Name	Direction	L	H	Connector (TO) No	Pin No	To Connector
26	IOB: Relay	CN1019	1	Right Intake Fan - Front:24VS				8	CN1014	Right Intake Fan - Front
			2	Right Intake Fan - Front:Lock Sensor				7		
	CN1019		3	Right Intake Fan - Front:GND				6		
			4	Right Intake Fan - Front:Speed switching				5		
			5	Right Intake Fan - Center:24VS				4		Right Intake Fan - Center
			6	Right Intake Fan - Rear:Lock Sensor				3	CN1018	Right Intake Fan - Rear
			7	Right Intake Fan - Rear:GND				2		
			8	Right Intake Fan - Rear:Speed switching				1		
			9	Right Intake Fan - Rear:24VS2				4		
			10	Right Intake Fan - Center:Lock Sensor				3	CN1014	Right Intake Fan - Center
			11	Right Intake Fan - Center:GND				2		
			12	Right Intake Fan - Center:Speed switching				1		
27	IOB: Relay	CN1014	1	Right Intake Fan - Front:24VS				4	CN1017	Right Intake Fan - Front
			2	Right Intake Fan - Front:Lock Sensor				3		
	CN1014		3	Right Intake Fan - Front:GND				2		
			4	Right Intake Fan - Front:Speed switching				1		
			5	Right Intake Fan - Center:24VS2				4	CN1024	Right Intake Fan - Center
			6	Right Intake Fan - Center:Lock Sensor				3		
			7	Right Intake Fan - Center:GND				2		
			8	Right Intake Fan - Center:Speed switching				1		
35	PSU-A: Relay	CN1055	1	5VS				1	CN328	RYB
			2	5VL				2		
	CN1055		3	24VS				3		
			4	24VS				4		
			5	24VS				5		
			6	GND				6		
			7	GND				7		
			8	GND				8		
			9	GND				9		
			10	NC				10		
			11	NC				-	-	NC
			12	NC						
	PSU-C	CN414	11	24V2_D	Power			1	CN329	RYB
			12	24V2_D	Power			2		
			13	24V2_D	Power			3		
		CN413	1	24V2_B	Power			4		
		CN414	8	24V2_C	Power			5		
			9	24V2_C	Power			6		
			2	5V	Power			7		
		CN410	1	5VE	Power			8		
		CN414	5	GND	Ground			9		
			6	GND	Ground			10		
			7	GND	Ground			11		
		CN413	3	GND	Ground			12		

			25	Test Trigger(5V)	OUTPUT			17		
			26	Test Jig :24V	Power			16		
			27	Power Relay Trigger-1(High-side)	OUTPUT	Fusing Relay:ON	Fusing Relay:OFF	15		
			28	Test Jig :5V	Power			14		
			29	Power Relay Trigger-2(Low-side side)	OUTPUT	Fusing	Fusing	13		
			30	AC Voltage Sensor date	INPUT			12		
			31	AC Voltage Sensor Circuit Power:24V	Power			11		
			32	Heater Trigger	OUTPUT	Relay ON	Relay OFF	10		
			33	AC Drive:5VL	Power			9		
			34	Zero-cross Signal	INPUT			8		
			35	AC Drive:GND	Ground			7		
			36	Fusing Heater Trigger1	OUTPUT	Triac ON	Triac OFF	6		
			37	Fusing Heater Trigger2	OUTPUT	Triac ON	Triac OFF	5		
			38	Fusing Heater Trigger3	OUTPUT	Triac ON	Triac OFF	4		
			39	Fusing Heater Trigger4	OUTPUT	Triac ON	Triac OFF	3		
			40	Fusing Heater Trigger5	OUTPUT	Triac ON	Triac OFF	2		
	-	-	-	NC				1		
	IOB	CN226	1	FIN 5VPower	Power			9	CN1078	FIN
			2	FIN 5VPower	Power			8		
			3	FIN 5VPower	Power			7		
			4	FIN RXD1(Reception Signal date From Under machine)	INPUT			6		
			5	GND (Connection to GND with a 0Ω resistor)	Ground			5		
			6	FIN TXD1(Reception Signal date From Upper machine)	OUTPUT			4		
			7	GND	Ground			3		
			8	GND	Ground			2		
			9	GND	Ground			1		
	PSU-A: Relay	CN1050	1	Charis-PSU_A:GND				3	CN1069	AC PCB
			2	Charis-PSU_A:5VX				2		
	CN1050		3	NC				1		
	PSU-C	CN409	1	NC				-	-	NC
			2	NC						
			3	NC						
			4	NC						
			5	NC						
			6	NC						
			7	NC						
			8	NC						
			9	FIN:24V_1	Power			2	CN1079	FIN
			10	FIN:24V_1	Power			4		
			11	FIN:GND	Ground			1		
			12	FIN:GND	Ground			5		
	-	-	-	NC				3		
	RYB	CN325	1	DDRB:+24VS_Z3R	Power			1	CN51	DDRB
			2	DDRB:GND	Ground			2		
	IOB	CN212	1	24V	Power			3	CN54	Decurler Cooling Fan
			2	Lock Sensor	INPUT	ON	OFF	2		
			3	Drive	OUTPUT	ON	OFF	1		
			4	NC				-	-	NC
			5	NC						
			6	NC						
31	IOB: Relay	CN991	1	Development Motor:GND				10	CN1073	Development Motor
			2	Development Motor:5V				9		
	CN991		3	Development Motor:Gain Change				8		
			4	Development Motor:CLOCK				7		
			5	Development Motor:LOCK				6		
			6	Development Motor:STRT/STOP				5		
			7	Development Motor:GND				4		
			8	Development Motor:GND				3		
			9	Development Motor:24V2				2		
			10	Development Motor:24V2				1		

harness No	Connector (FROM) To Connector	No	Pin No	Signal Information: Signal Name	Direction	L	H	Connector (TO) No	Pin No	To Connector
31			24	Motor :Error	INPUT	Trouble	Normal	5		
			25	PTR Separation Motor:CLOCK	OUTPUT			4		
			26	PTR Separation Motor:ENABLE	OUTPUT	Normal	Sleep	3		
			27	PTR Separation Motor:CW/CCW	OUTPUT	CW	CCW	2		
			28	PTR Separation Motor:Current switching	OUTPUT	ON	OFF	1		
	-	-	-	NC				11	CN752	Power PackT1/T2
				NC				10		
	IOB	CN211	29	+24VS	Power			9		
			30	GND	Ground			8		
			31	PWM:T1	OUTPUT			7		
			32	SC:T1	INPUT	Normal	Detect	6		
			33	AD:T1	INPUT			5		
			34	PWM:T2(-)	OUTPUT			4		
			35	SC:T2(-)	INPUT	Normal	Detect	3		
			36	AD:T2(-)	INPUT			2		
			37	PWM:T2(+)	OUTPUT			1		
			38	NC				-	-	NC
			39	NC						
			40	NC						
			41	NC						
			42	NC						
			43	NC						
			44	NC						
			45	NC						
			46	NC						
			47	NC						
			48	NC						
			49	NC						
			50	NC						
	-	-	-	NC				1	CN750	ITB Unit Heater
	AC PCB: Relay	CN1070	1	ITB Unit Heater (N)				2		
			2	ITB Unit Heater (L)				3		
	CN1070	-	-	NC				4		
		-	-	NC				5		
		-	-	NC				6		
35	PSU-B	CN442_B	1	5VX	Power			1	CN576	IPU
	PSU-A	CN442_A	1	5VX	Power			2		
			2	5VX	Power			3		
	PSU-B	CN442_B	3	GND	Ground			4		
	PSU-A	CN442_A	3	GND	Ground			5		
			4	GND	Ground			6		
	PSU-B	CN442_B	2	NC				-	-	N.C
			4	NC						
	PSU-A	CN444_A	1	24VLD	Power			1	CN173	CNB
			5	GND	Ground			2		
	PSU-B	CN444_B	4	24V	Power			3		
			8	GND	Ground			4		
	PSU-A	CN444_A	2	NC				-	-	NC
			3	NC						
			4	NC						
			6	NC						
			7	NC						
			8	NC						
	PSU-A	CN449_A	1	NC						
			2	NC						
			3	5VS	Power			1	CN1055	RTB
	PSU-B	CN443_B	1	5VL	Power			2		
	PSU-A	CN445_A	1	24VS	Power			3		
			2	24VS	Power			4		
			3	24VS	Power			5		
	PSU-B	CN443_B	7	GND	Ground			6		
	PSU-A	CN445_A	6	GND	Ground			7		
			7	GND	Ground			8		
			8	GND	Ground			9		

		CN414	3	GND	Ground			13		
			4	GND	Ground			14		
			1	GND	Ground			15		
		CN410	5	GND	Ground			16		
			2	NC				-	-	NC
			3	NC						
			4	NC						
			6	NC						
			7	NC						
			8	NC						
			9	NC						
			10	NC						
			11	NC						
			12	NC						
			13	NC						
		CN413	2	NC						
			4	NC						
			5	NC						
			6	NC						
			7	NC						
			8	NC						
		CN414	10	NC						
			14	NC						
31	RYB	CN322	1	+24VS	Power			1	CN755	TDRB
			2	GND	Ground			2		
			3	+5V	Power			3		
	-	-	-	NC				4		
				NC				5		
				NC				6		
				NC				19	CN756	TDRB
				NC				18		
				NC				17		
				NC				16		
				NC				15		
	IOB	CN211	1	ID Sensor:+3.3V	Power			14		
			2	ID Sensor:GND	Ground			13		
			3	ID Sensor:LEDON	OUTPUT			12		
			4	ID Sensor:FB Signal(Reflection)	INPUT			11		
			5	Unit Set Sensor	INPUT	Set	Not Set	10		
			6	Motor Driver Reset	OUTPUT	ON	OFF	9		
			7	ID Sensor FAN	OUTPUT	ON	OFF	8		
			8	Belt Centering Reset Sensor: Output	INPUT	Set	Not Set	7		
			9	Belt Centering Roller HP Sensor	INPUT		Belt Centering Roller HP	6		
			10	PTR Separation Sensor	INPUT	Contact	Not Contact	5		
			11	ID Sensor FAN:LOCK	INPUT	ON	OFF	4		
	-	-	-	NC				3		
				NC				2		
				NC				1		
	IOB	CN211	12	Belt Centering Sensor:B	INPUT			17	CN757	TDRB
			13	Belt Centering Sensor:A	INPUT			16		
			14	Belt Centering Sensor:LED	OUTPUT			15		
			15	Transfer Belt Drive Motor:CW/CCW	OUTPUT	CCW	CW	14		
			16	Transfer Belt Drive Motor:Gain Change	OUTPUT	Number of revolution sc,x	Number of revolution sa,b	13		
			17	Transfer Belt Drive Motor:CLOCK	OUTPUT			12		
			18	Transfer Belt Drive Motor:LOCK	INPUT	ON (Rated)	OFF	11		
			19	Transfer Belt Drive Motor::START/STOP	OUTPUT	ON	OFF	10		
			20	Belt Centering Motor :CLOCK	OUTPUT			9		
			21	Belt Centering Motor :ENABLE	OUTPUT	Normal	Sleep	8		
			22	Belt Centering Motor :CW/CCW	OUTPUT	CW	CCW	7		
			23	Belt Centering Motor :Current switching	OUTPUT	ON	OFF	6		

harness No	Connector (FROM) To Connector	No	Pin No	Signal Information: Signal Name	Direction	L	H	Connector (TO) No	Pin No	To Connector
39	IOB	CN202	1	GND	Ground			15	CN1081	CNB
			2	FFC Connection Sensor	INPUT			14		
			3	I2C:ID tag date				13		
			4	I2C:ID tag Clock				12		
			5	I2C:HST date	Bus			11		
			6	I2C:HST Clock	INPUT			10		
			7	Power-on Reset Signal	INPUT	OFF	ON	9		
			8	IOB Start-up Detection Signal	OUTPUT		Start-up	8		
			9	interruption:IOB3	OUTPUT	interruption		7		
			10	interruption:IOB2	OUTPUT		interruption	6		
			11	interruption:IOB1	OUTPUT		interruption	5		
			12	FFC Connection Sensor	INPUT			4		
			13	NC				3		
	-	-	-	NC				2		
				NC				1		
	IOB	CN202	14	GND	Ground			30		
			15	IPU : B_PFGETE_K_N	INPUT	FGATE ON		29		
			16	IPU :VEPCNV_RDY	OUTPUT	5VE LOW		28		
			17	IPU :VECNV_LV_N	INPUT	5VEP/5V ON		27		
			18	IPU :PON_VEPCNV_N	INPUT	5VEP/5V ON		26		
			19	IPU :GND	Ground			25		
			20	IPU :NC				24		
			21	IPU :PONENG1_N	INPUT	5VEP/5V(Stabilit		23		
			22	ID Sensor:FB Signal(Reflection)	OUTPUT			22		
			23	ID Sensor:FB Signal(Diffused Reflection)	OUTPUT			21		
			24	ID Sensor:LEDON	INPUT			20		
			25	ID Sensor:GND	Ground			19		
			26	ID Sensor:+3.3V	Power			18		
	-	-	-	NC				17		
				NC				16		
	IOB	CN218	1	PSU Cooling Fan - Vertical Left: 24V	Power			6	CN892	PSU Cooling Fan - Vertical
			2	PSU Cooling Fan - Vertical Left : Lock Signal	INPUT	OFF	ON	5		
			3	PSU Cooling Fan - Vertical Left : Drive	OUTPUT	ON	OFF	4		
			4	PSU Cooling Fan - Vertical Right:24V	Power			3		PSU Cooling Fan - Vertical Right
			5	PSU Cooling Fan - Vertical Right :Lock Signal	INPUT	OFF	ON	2		
			6	PSU Cooling Fan - Vertical Right :Drive	OUTPUT	ON	OFF	1		
			7	PSU Intake Fan M1 - Right:24V	Power			3	CN1057	PSU Intake Fan M1 - Right
			8	PSU Intake Fan M1 - Right:Lock	INPUT	OFF	ON	2		
			9	PSU Intake Fan M1 - Right:Drive	OUTPUT	ON	OFF	1		
			10	PSU Intake Fan M2 - Right:24V	Power			3	CN1059	PSU Intake Fan M2 - Right
			11	PSU Intake Fan M2 - Right:Lock	INPUT	OFF	ON	2		
			12	PSU Intake Fan M2 - Right:Drive	OUTPUT	ON	OFF	1		
			13	PSU Intake Fan M1 - Left:24V	Power			3	CN1058	PSU Intake Fan M1 - Left
			14	PSU Intake Fan M1 - Left:Lock	INPUT	OFF	ON	2		
			15	PSU Intake Fan M1 - Left:Drive	OUTPUT	ON	OFF	1		
			16	NC				-	-	NC
			17	NC				10	CN1096	PSU-A
			18	NC				9		PSU-B
			19	NC				8		
			20	PSU-B:Charis PSU:Low-power Trigger	OUTPUT	ON	OFF	7		
			21	PSU-B:Charis PSU:GND	Ground			6		
			22	PSU-A:Charis PSU:Energy saving Signal (IPU)	OUTPUT	5VEP/5V ON		5		
			23	PSU-A:Charis PSU:Energy saving Signal (IPU)	OUTPUT	5VEP/5V ON		4		
			24	PSU-A:Charis PSU:Energy saving Signal (IPU)	OUTPUT	5VE LOW		3		
			25	PSU-A:Charis PSU:24VSTrigger	OUTPUT	ON	OFF	2		
			26	PSU-A:Charis PSU:GND	Ground			1		
			27	PSU-C:Baron PSU: GND	Ground			5	CN415	PSU-C
			28	PSU-C:Baron PSU: 24VS Low-power Trigger	OUTPUT	ON	OFF	4		
			29	PSU-C:Baron PSU:5V_24V2 Power Trigger	OUTPUT	ON	OFF	3		
			30	PSU Exhaust FanM2 - Left:24V	Power			3	CN1060	PSU Exhaust FanM2 - Left
			31	PSU Exhaust FanM2 - Left:Lock	INPUT	OFF	ON	2		
			32	PSU Exhaust FanM2 - Left:Drive	OUTPUT	ON	OFF	1		
	-	-	-	NC				2	CN415	NC
				NC				1		

	PSU-B	CN443_B	2	NC				10		
			3	NC				11		
			4	NC				12		
			5	NC				-	-	N.C
			6	NC						
			8	NC						
			9	NC						
			10	NC						
			11	NC						
			12	NC						
	PSU-A	CN445_A	4	NC						
			5	NC						
			9	NC						
			10	NC						
	PSU-B	CN444_B	1	SIO_24V	Power			1	CN1054	SIO
			2	SIO_24V	Power			2		
			5	GND	Ground			3		
			6	GND	Ground			4		
	PSU-B	CN445_B	1	LCT_24V	Power			5		LCT
			2	LCT_24V	Power			6		
			6	GND	Ground			7		
			7	GND	Ground			8		
	PSU-B	CN444_B	3	NC				-	-	NC
			7	NC						
	PSU-B	CN445_B	3	NC						
			4	NC						
			5	NC						
			8	NC						
			9	NC						
			10	NC						
	PSU-A	CN426_A	2	NC				1	CN1050	AC PCB
			3	5VX	Power			2		
			1	GND	Ground			3		
			4	NC				-	-	N.C
	-	-	-	NC				1	CN1096	IOB
			-	NC				2		
			-	NC				3		
	PSU-B	CN425_B	2	PSU-B:Charis PSU:24VSTrigger	INPUT	ON	OFF	4		
			1	PSU-B:Charis PSU:GND	Ground			5		
	PSU-A	CN425_A	5	PSU-A:Charis PSU:Energy saving Signal (IPU)	INPUT	ON	OFF	6		
			4	PSU-A:Charis PSU:Energy saving Signal (IPU)	INPUT	Down	Up	7		
			3	PSU-A:Charis PSU:NC	OUTPUT	Ready	Standby	8		
			2	PSU-A:Charis PSU:24VSTrigger	INPUT	ON	OFF	9		
			1	PSU-A:Charis PSU:GND	Ground			10		
	PSU-B	CN448_B	9	NC				-	-	
			8	ADF 24VPower	Power			1	CN1001	ADF
			7	ADF 24VPower	Power			2		
			6	ADF 24VPower	Power			3		
			5	ADF 24VPower	Power			4		
			4	ADF GND	Ground			5		
			3	ADF GND	Ground			6		
			2	ADF GND	Ground			7		
			1	ADF GND	Ground			8		

harness No	Connector (FROM) To Connector	No	Pin No	Signal Information Signal Name	Direction	L	H	Connector (TO) No	Pin No	To Connector
40			24	ID Sensor:FB Signal(Reflection)				5	CN105	BCU
			25	ID Sensor:FB Signal(Diffused Reflection)				4		
			26	ID Sensor:LEDON				3		
			27	ID Sensor:GND				2		
			28	ID Sensor:+3.3V				1		
	BCU	BS1	1	GND	Ground			7		
			2	Short(CENTER_Diffused Reflection Sensor Output)	INPUT			9		
			3	Short(CENTER_Reflection Sensor Output)	INPUT			10		
			4	Short(REAR_Reflection Sensor Output)	INPUT			15		
			5	NC				6		
			6	NC				8		
	IOB: Relay	CN1081	29	NC				11		
			30	NC				12		
	CN1071		13	NC				13		
			14	NC				14		
			15	NC				-	-	NC
	CNB	CN175	5	NC				16	CN172	NC
	Polygon Mirror Motor PCB : Relay	CN1101	6	+24V				1	CN584	IPU
			5	GND				2		
			4	PMON2_N				3		
	CN2		3	SCRDY2_N				4		
			2	PMCLK2				5		
			-	NC				6		
			1	GND				7		
	LD PCB: Relay	CN1102	15	+5VS				1	CN570	IPU
			14	+5VS				2		
	CN1		13	+5VS				3		
			12	GND				4		
			11	GND				5		
			10	GND				6		
			-	NC				7		
			9	TNCNTEND0				8		
			8	VTECINT				9		
			-	NC				10		
			7	PFGATE0_N				11		
			-	NC				12		
			6	MLSYNC0_N				13		
			-	NC				14		
			5	MFSYNC0_N				15		
			-	NC				16		
			4	CLK_SY				17		
			3	SYCS_N				18		
			2	SYDO_N				19		
			1	SYDI_N				20		
	IPU	CN575	1	PDRPSSNFC_IPU				22	CN101	BCU
			2	PDRPSSNK_IPU				21		
			3	S2M_RST_N				20		
			4	M2P_RST_N				19		
			5	IPU_INT_N				18		
			6	DUST_FGATE_N				17		
			7	ADF_RXD				16		
			8	ADF_TXD				15		
			9	G2_SYCS1_N				14		
			10	G2_SYCS0_N				13		
			11	G2_SYHS				12		
			12	G2_SYCLK				11		
			13	G2_SYDI				10		
			14	G2_SYDO				9		
			15	G1_SYCS1_N				8		
			16	G1_SYCS0_N				7		
			17	G1_SYHS				6		
			18	G1_SYCLK				5		
			19	G1_SYDI				4		
			20	G1_SYDO				3		
			21	5V	Power			2		
			22	GND	Ground			1		
	CNB	CN177	10	GND				1	CN578	IPU
			9	LDB 24V Interlock Power				2		
			8	LDB 24V Interlock Power				3		
			7	GND				4		
			6	GND				5		
			5	GND				6		
			4	Polygon MT 24VPower				7		

40	SIO: Relay	CN1082	11	HP Sensor				1	CN579	IPU
	CN1082		10	Scanner Motor Standard Voltage Switch3 Signal				2		
			9	Scanner Motor Standard Voltage Switch2 Signal				3		
			8	Scanner Motor Standard Voltage Switch1 Signal				4		
			7	Scanner Motor Reset Signal				5		
			6	Scanner Motor Direction of rotation Switch Signal				6		
			5	Scanner Motor Clock Signal				7		
			4	Scanner Motor Excitation Mode Switch2 Signal				8		
			3	Scanner Motor Excitation Mode Switch1 Signal				9		
			2	Scanner Motor Enable Signal				10		
			1	NC				11		
	CNB	CN175	4	ADF_TXD Signa Reading Gate Signal				12		
			3	ADF:UART Sending Signal				13		
			2	ADF:UART Reception Signal				14		
			1	ADF Power ON Signal				15		
	CNB	CN174	4	AKS 5VEPower				16		
			3	Platen Sensor Signal				17		
			2	DOC 5VEPower				18		
			1	ADF Original Set Sensor Signal				19		
	SIO: Relay	CN1082	22	Original Size Sensor1				20		
			21	Original Size Sensor2				21		
	CN1082		20	Original Size Sensor3				22		
			19	Original Size Sensor4				23		
			18	Original Size Sensor5				24		
			17	Original Size Sensor ON Signal				25		
			16	GND				26		
			15	Exposure LED ON Signal				27		
			14	LED Error Signal				28		
			13	GND				29		
			12	Scanner Power ON Signal				30		
	IOB: Relay	CN1081	1	GND				15	CN172	CNB
			2	FFC Connection Sensor				14		
	CN1081		3	I2C:ID tag date				13		
			4	I2C:ID tag Clock				12		
			5	I2C:HST date				11		
			6	I2C:HST Clock				10		
			7	Power-on Reset Signal				9		
			8	IOB Start-up Detection Signal				8		
			9	Interruption:IOB3				7		
			10	Interruption:IOB2				6		
			11	Interruption:IOB1				5		
			12	FFC Connection Sensor				4		
	DF Open/Close Sensor: Relay	CN885	1	Platen Sensor:Vcc				3		
			2	Platen Sensor:Vout				2		
	CN885		3	Platen Sensor:GND				1		
	IOB: Relay	CN1081	16	GND				2	CN586	IPU
			17	IPU : B_PFGETE_K_N				1		
	CN1071		18	IPU :VEPCNV_RDY_N				6	CN596	IPU
			19	IPU :VECNV_LV_N				5		
			20	IPU :PON_VEPCNV_N				4		
			21	IPU :GND				3		
			22	IPU :NC				2		
			23	IPU :PONENG1_N				1		

harness No	Connector (FROM) To Connector	No	Pin No	Signal Information Signal Name	Direction	L	H	Connector (TO) No	Pin No	To Connector
42	DRB: Relay	CN801	1	CIS Cleaning Fan:Drive				A16		
			2	CIS Cleaning Fan:Lock Sensor				A15		
	CN803		3	Registration Entrance Motor:Clock				A14		
			4	Registration Entrance Motor:Forward/Reverse				A13		
			5	Registration Entrance Motor:Enable				A12		
			6	Registration Entrance Motor:Current switching				A11		
			7	Registration Gate Motor:Clock				A10		
			8	Registration Gate Motor:Forward/Reverse				A9		
			9	Registration Gate Motor:Enable				A8		
			10	Registration Gate Motor:Current switching				A7		
			11	Registration Gate Motor:Current switching2				A6		
			12	Separation Power Pack:Trouble Sensor				A5		
			13	Separation Power Pack:PWM(DC)				A4		
			14	Separation Power Pack:PWM(AC)				A3		
			15	Separation Power Pack:GND				A2		
			16	Separation Power Pack:24V				A1		
			17	NC				-	-	NC
	DRB: Relay	CN805	1	+24VS				1	CN321	RYB
			2	GND				3		
	CN805		3	+5V				5		
			4	NC				-		
			5	GND				4		
			6	+24VS				2		
-	-		-	NC				B12	CN204	IOB
	DRB: Relay	CN807	1	NC				B11		
	D1795301		2	Transfer timing Motor: Excitation Switch				B10		
	CN809		3					B9		
			4	PTR Cooling Fan - Rear:Drive				B8		
			5	PTR Cooling Fan - Rear:Lock Sensor				B7		
			6	PTR Cooling Fan - Front:Drive				B6		
			7	PTR Cooling Fan - Front:Lock Sensor				B5		
			8	Main Relay Separation Motor:Clock				B4		
			9	Main Relay Separation Motor:Forward/Reverse				B3		
			10	Main Relay Separation Motor:Enable				B2		
			11	Main Relay Separation Motor:Current switching				B1		
	DRB: Relay	CN806	1	LCIT Relay Separation Motor:Clock				A12		
			2	LCIT Relay Separation Motor:Forward/Reverse				A11		
	CN808		3	LCIT Relay Separation Motor:Enable				A10		
			4	LCIT Relay Separation Motor:Current switching				A9		
			5	Duplex Transport Motor2:Clock				A8		
			6	Duplex Transport Motor2:Forward/Reverse				A7		
			7	Duplex Transport Motor2:Enable				A6		
			8	Duplex Transport Motor2:Current switching				A5		
			9	TH Transport Motor:Clock				A4		
			10	TH Transport Motor:Forward/Reverse				A3		
			11	TH Transport Motor:Enable				A2		
			12	TH Transport Motor:Current switching				A1		
N.C	CN810		1	NC				-	-	NC
			2	NC						
N.C	-		-	NC				B20	CN205	IOB
	DRB: Relay	CN812	1	NC				B19		
			2	NC				B18		
	CN814		3	Driver IC Cooling FAN:Drive				B17		
			4	Driver IC Cooling FAN:Lock Sensor				B16		
			5	Registration Entrance Sensor				B15		
			6	Registration Timing Sensor				B14		
			7	Transfer Timing Sensor				B13		
			8	LCTRelay Sensor				B12		
			9	Main Relay Sensor				B11		
			10	Main Relay Separation HP Sensor				B10		
			11	LCIT Relay Separation Motor				B9		
			12	Trailing Edge Shift HP Sensor				B8		
			13	Rotary Gate HP Sensor				B7		
			14	Registration Shift HP Sensor				B6		
			15	Duplex Transport Sensor4				B5		
			16	Duplex Transport Sensor5				B4		
			17	Duplex Transport Sensor6				B3		
			18	Duplex Unit Exit Sensor				B2		
			19	PTB Sensor				B1		
	DRB: Relay	CN811	1	CIS:System Clock				A20		
			2	CIS:Line synchronization Signal				A19		
	CN813		3	CIS:Serial image data				A18		
			4	CIS:LEDDrive PWM				A17		

			3	Polygon MT 24VPower				8		
			2	(NC)				9		
			1	(NC)				10		
	ADF: Relay	CN881	1	Platen Sensor Signal				8	CN176	CNB
			2	GND				7		
	CN901		3	ADF Power ON Signal				6		
			4	ADF_TXD Signal Reading Gate Signal				5		
			5	ADF_UART_Sending Signal (IOB-->ADF)				4		
			6	ADF Original Set Sensor Signal				3		
			7	ADF_UART_Reception Signal (ADF-->IOB)				2		
			8	ADF 5VEPower				1		
			9	ADF 24VPower				8	CN1001	PSU-B
			10	ADF 24VPower				7		
			11	ADF 24VPower				6		
			12	ADF 24VPower				5		
			13	ADF GND				4		
			14	ADF GND				3		
			15	ADF GND				2		
			16	ADF GND				1		
553	CTL	CN1	1	GND	Ground			1	CM2	HDD Fan
			2	Power	Power			3		
			3	Lock Signal	INPUT	OFF	ON	2		
42	DRB: Relay	CN802	1	Registration Shift Motor:Clock				B16	CN203	IOB
			2	Registration Shift Motor:Forward/Reverse				B15		
	CN804		3	Registration Shift Motor:Enable				B14		
			4	Registration Shift Motor:Current switching				B13		
			5	Registration Timing Motor:Clock				B12		
			6	Registration Timing Motor:Forward/Reverse				B11		
			7	Registration Timing Motor:Enable				B10		
			8	Registration Timing Motor:Current switching				B9		
			9	Transfer timing Motor:Clock				B8		
			10	Transfer timing Motor:Forward/Reverse				B7		
			11	Transfer timing Motor:Enable				B6		
			12	Transfer timing Motor:Current switching				B5		
			13	Trailing Edge Shift Motor:Clock				B4		
			14	Trailing Edge Shift Motor:Forward/Reverse				B3		
			15	Trailing Edge Shift Motor:Enable				B2		
			16	Trailing Edge Shift Motor:Current switching				B1		
harness	Connector (FROM)			Signal Information				Connector (TO)		
No	To Connector	No	Pin No	Signal Name	Direction	L	H	No	Pin No	To Connector
47			5	GND	Ground			5		
			6	GND	Ground			6		
			7	GND	Ground			7		
			8	GND	Ground			8		
			9	GND	Ground			9		
			10	Power(+5V)	Power			10		
			11	Power(+5VL)	Power			11		
			12	Power(+24V)	Power			12		
			13	Power(+24V)	Power			13		
			14	Power(+24V2)	Power			14		
	RYB	CN323	1	+24VSPower	Power			1	CN650	Fusing Motor
			2	GND	Ground			2		
			3	+24VSPower	Power			1	CN282	EDRB
			4	+24VSPower	Power			2		
			5	GND	Ground			3		
			6	GND	Ground			4		
			7	+24VPower	Power			5		
			8	GND	Ground			6		
			9	GND	Ground			7		
			10	+5VPower	Power			8		
603	IPU: Relay	CN1	1	+5VS				15	CN3	LD PCB
			2	+5VS				14		
	CN1102		3	+5VS				13		
			4	GND				12		
			5	GND				11		
			6	GND				10		
			7	TNCNTEND0				9		
			8	VTECINT				8		
			9	PFGATE0_N				7		
			10	MLSYNC0_N				6		
			11	MFSYNC0_N				5		
			12	CLK_SY				4		
			13	SYCS_N				3		
			14	SYDO_N				2		
			15	SYDI_N				1		
	IPU: Relay	CN2	1	+24V				6	CN4	Polygon Mirror Motor PCB
			2	GND				5		
	CN1101		3	PMON2_N				4		
			4	SCRDY2_N				3		
			5	PMCLK2				2		
			6	GND				1		
51	Noise Filer	TB100	1	AC_H				1	TB1	AC PCB
		TB101	1	AC_N				1	TB2	
94	AC PCB: Relay	CN1062	1	Main Switch out (H)				1	T141	AC Power Switch
			2	Main Switch out (N)				1	T143	
	CN1062		3	Main Switch in (H)				1	T142	
			4	Main Switch in (N)				1	T144	
	AC PCB: Relay	CN1065	1	Scanner Heater H				1	CN1025	Scanner Heater
			2	Scanner Heater L				2		
93	AC PCB: Relay	CN1067	1	PSU_A Charis-c1(H)				1	CN998	PSU-A
			2	PSU_B Charis-c1(H)				2		PSU-B
	CN1067		3	PSU_C Taurus-c1(H)				1	T115	PSU-C
			4	NC				-	-	NC
			5	NC						
			6	PSU_A Charis-c1(N)				3	CN998	PSU-A
			7	PSU_B Charis-c1(N)				4		PSU-B
			8	PSU_C Taurus-c1(N)				1	T116	PSU-C
53	AC PCB: Relay	CN1064	1	Paper Feed Heater (upper) H				1	CN1026	Bank Heater upper
			2	Paper Feed Heater (under) H				1	CN1027	Bank Heater under
	CN1063 or CN1064		3	LCT Heater H				1	CN1028	LCT Heater
			4	Paper Feed Heater (upper) L				2	CN1026	Bank Heater upper
			5	Paper Feed Heater (under) L				2	CN1027	Bank Heater under
			6	LCT Heater L				2	CN1028	LCT Heater
54	AC PCB: Relay	CN998	1	PSU_A_1 Charis-c1(H)				1	CN441_A	PSU-A
			2	PSU_B_1 Charis-c1(H)				1	CN441_B	PSU-B
	CN998		3	PSU_A_1 Charis-c1(N)				3	CN441_A	PSU-A
			4	PSU_B_1 Charis-c1(N)				3	CN441_B	PSU-B
		-	-	NC				2	CN441_A	PSU-A
				NC				2	CN441_B	PSU-B
57	Charge, Grid, Bias Power Pack	CN154	1	G Output				1	T175	PCU
			2	NC				-	-	NC
			3	NC						
			4	NC						
			5	NC						
			6	NC						
			7	B Output				1	T176	PCU
58	Charge, Grid, Bias Power Pack	T152	1	C1 Output				1	T171	PCU
59	Charge, Grid, Bias Power Pack	T153	1	C2 Output				1	T172	PCU
35	PSU-B: Relay	CN1054	1	SIO_24V				4	CN370	SIO
			2	SIO_24V				3		

			5	CIS:Threshold Voltage Adjustment PWM				A16		
			6	Double-Feed Sensors Detection CLR Signal				A15		
			7	Gain Change Signal1				A14		
			8	Gain Change Signal2				A13		
			9	Double-Feed Sensors Sensitivity Sensor Signal				A12		
			10	(Double-Feed Sensors Sub)				A11		
			11	Double-Feed Sensors Output Signal				A10		
			12	Sending Signal Drive Wave(A Phase)				A9		
			13	Sending Signal Drive Wave(-A Phase)				A8		
			14	DRB Set Sensor				A7		
			15	DRB Motor Driver Error				A6		
			16	Paper Transport Fan - Rear:Drive				A5		
			17	Paper Transport Fan - Rear:Lock Sensor				A4		
			18	Paper Transport Fan - Front:Drive				A3		
			19	Paper Transport Fan - Front:Lock Sensor				A2		
			20	NC				A1		
43	IOB: Relay	CN972	1	Sensor:GND				3	CN1042	Toner empty Sensor
			2	Sensor: Output				2		
	CN972		3	Sensor:5V				1		
			4	NC				-	-	
44	IOB: Relay	CN992	1	24V				4	CN994	Development Cooling Fan - Rear
			2	Lock Sensor				3		Development Cooling Fan - Front
			3	GND				2		
	CN992		4	Speed switching				1		
			5	NC				-	-	NC
45	RYB: Relay	CN1036	1	Toner Bottle Chuck O/C Sensor:GND				3	CN1043	Toner Bottle Chuck O/C Sensor
			2	Toner Bottle Chuck O/C Sensor: Output				2		
	CN1037,CN1036		3	Toner Bottle Chuck O/C Sensor:5V				1		
46	IOB	CN229	1	SD-CARD:CS	OUTPUT			6	CN153	SDCB
			2	SD-CARD:SDO	OUTPUT			5		
			3	SD-CARD:CLK	OUTPUT			4		
			4	SD-CARD:SDI	INPUT			3		
			5	SD-CARD:GND	Ground			2		
			6	SD-CARD:+3.3V	Power			1		
47	RYB	CN324	1	Power(+5VS)	Power			1	CN200	IOB
			2	Power(+24VS)	Power			2		
			3	Power(+24VS)	Power			3		
			4	GND	Ground			4		
harness	Connector (FROM)			Signal Information				Connector (TO)		
No	To Connector	No	Pin No	Signal Name	Direction	L	H	No	Pin No	To Connector
66	NC	-	-	NC				1		NC
				NC				19	CN764	NC
				NC				18		
				NC				17		
				NC				16		
				NC				15		
				NC				14		
				NC				13		
	EDRB	CN284	1	Duplex Lower Cooling Fan - Front:24V	Power			12		Duplex Lower Cooling Fan - Front
			2	Duplex Lower Cooling Fan - Front:LOCK	INPUT	ON	lock	11		
			3	Duplex Lower Cooling Fan - Front:GND	OUTPUT	ON	Stop	10		
			4	Duplex Lower Cooling Fan - Rear:24V	Power			9		Duplex Lower Cooling Fan - Rear
			5	Duplex Lower Cooling Fan - Rear:LOCK	INPUT	ON	lock	8		
			6	Duplex Lower Cooling Fan - Rear:GND	OUTPUT	ON	Stop	7		
			7	Exit Motor:CLK				6		Exit Motor
			8	Exit Motor:LOCK	INPUT	Out of range	Normal	5		
			9	Exit Motor:S/S	OUTPUT	ON	Stop	4		
			10	Duplex Invert Sensor:GND	Ground			3		Duplex Invert Sensor
			11	Duplex Invert Sensor	INPUT	Not Detect	Detect	2		
			12	Duplex Invert Sensor:5V	Power			1		
			13	NC				-	-	NC
			14	NC				-		
			15	NC				-		
			16	NC				3	CN922	NC
			17	NC				2		
			18	NC				1		
			19	HP Cooling Intake Fan:24V	Power			3	CN930	HP Cooling Intake Fan
			20	HP Cooling Intake Fan:LOCK	INPUT	ON	lock	2		
			21	HP Cooling Intake Fan:GND	OUTPUT	ON	Stop	1		
			22	HP Cooling Exhaust Fan:24V	Power			3	CN931	HP Cooling Exhaust Fan
			23	HP Cooling Exhaust Fan:LOCK	INPUT	ON	lock	2		
			24	HP Cooling Exhaust Fan:GND	OUTPUT	ON	Stop	1		
	EDRB	CN285	A1	Duplex Transport Sensor2:GND	Ground			13	CN769	Duplex Transport Sensor
			A2	Duplex Transport Sensor2	INPUT	Not Detect	Detect	12		
			A3	Duplex Transport Sensor2:5V	Power			11		
			A4	Duplex Transport Sensor3:GND	Ground			10		
			A5	Duplex Transport Sensor3	INPUT	Not Detect	Detect	9		
			A6	Duplex Transport Sensor3:5V	Power			8		
			A7	NC				7		NC
			A8	NC				6		
			A9	NC				5		
			A10	NC				4		
			A11	NC				3		
			A12	NC				2		
	NC	-	-	NC				1		
	EDRB	CN285	B1	Exit JG HP Sensor:GND	Ground			12	CN770	Exit JG HP Sensor
			B2	Exit JG HP Sensor	INPUT	Straight	Reversal	11		
			B3	Exit JG HP Sensor:5V	Power			10		
			B4	Duplex Transport Sensor1:GND	Ground			9		Duplex Transport Sensor1
			B5	Duplex Transport Sensor1	INPUT	Not Detect	Detect	8		
			B6	Duplex Transport Sensor1:5V	Power			7		
			B7	Exit Invert Sensor:GND	Ground			6		Exit Invert Sensor
			B8	Exit Invert Sensor	INPUT	Not Detect	Detect	5		
			B9	Exit Invert Sensor:5V	Power			4		
			B10	Exit Invert Junction Gate HP Sensor:GND	Ground			3		Exit Invert Junction Gate HP Sensor
			B11	Exit Invert Junction Gate HP Sensor	INPUT	Not Detect	Detect	2		
			B12	Exit Invert Junction Gate HP Sensor:5V	Power			1		
67	NC	-	-	NC				32	CN765	NC
	EDRB	CN287	B1	Exit Invert Junction Gate Motor:-B Phase				31		Exit Invert Junction Gate
			B2	Exit Invert Junction Gate Motor:24VS	Power			30		
			B3	Exit Invert Junction Gate Motor:B Phase				29		
			B4	Exit Invert Junction Gate Motor:-A Phase				28		
			B5	Exit Invert Junction Gate Motor:24VS	Power			27		
			B6	Exit Invert Junction Gate Motor:A Phase				26		
			B7	Exit Invert Junction Gate Motor:-B Phase				25		Exit Invert Junction Gate
			B8	Exit Invert Junction Gate Motor:24VS	Power			24		
			B9	Exit Invert Junction Gate Motor:B Phase				23		
			B10	Exit Invert Junction Gate Motor:-A Phase				22		
			B11	Exit Invert Junction Gate Motor:24VS	Power			21		
			B12	Exit Invert Junction Gate Motor:A Phase				20		
	NC	-	-	NC				19		NC
			-	NC				18		
			-	NC				17		
			-	NC				16		
	EDRB	CN287	A1	Duplex Transport Motor1:-B Phase				15		Duplex Transport Motor
			A2	Duplex Transport Motor1:24VS	Power			14		
			A3	Duplex Transport Motor1:B Phase				13		
			A4	Duplex Transport Motor1:-A Phase				12		
			A5	Duplex Transport Motor1:24VS	Power			11		
			A6	Duplex Transport Motor1:A Phase				10		

	CN1054		3	GND				2		
			4	GND				1		
			5	LCT_24V				4	CN741	LCT
			6	LCT_24V				2		
			7	GND				5		
			8	GND				1		
	NC	-	-	NC				3		
66	RYB	CN326	2	Exit Motor:GND	Ground			1	CN760	Exit Motor
			1	Exit Motor:24VS	Power			2		
	EDRB	CN286	1	Set Sensor:GND	Ground			20	CN763	Set Sensor
			2	Set Sensor	INPUT	Set	Not Set	19		
			3	Exit sensor:GND	Ground			18		Exit sensor
			4	Exit sensor	INPUT	Not Detect	Detect	17		
			5	Exit sensor:5V	Power			16		
			6	Exit Junction Gate Sensor :GND	Ground			15		Exit Junction Gate Sensor
			7	Exit Junction Gate Sensor	INPUT	Not Detect	Detect	14		
			8	Exit Junction Gate Sensor :5V	Power			13		
			9	Purge Relay Sensor:GND	Ground			12		Purge Relay Sensor
			10	Purge Relay Sensor	INPUT	Not Detect	Detect	11		
			11	Purge Relay Sensor:5V	Power			10		
			12	Invert Junction Gate Solenoid:ON	OUTPUT	ON	OFF	9		Invert Junction Gate
			13	Invert Junction Gate Solenoid:24VS	Power			8		
	EDRB	CN288	1	Exit Junction Gate Motor :A Phase				7		Exit Junction Gate Motor
			2	Exit Junction Gate Motor :24VS	Power			6		
			3	Exit Junction Gate Motor :-A Phase				5		
			4	Exit Junction Gate Motor :B Phase				4		
			5	Exit Junction Gate Motor :24VS	Power			3		
			6	Exit Junction Gate Motor :-B Phase				2		

harness No	Connector (FROM) To Connector	No	Pin No	Signal Information: Signal Name	Direction	L	H	Connector (TO) No	Pin No	To Connector
73			A8	Exit Exhaust Fan - Left Rear:LOCK	INPUT	ON	lock	2		
			A9	Exit Exhaust Fan - Left Rear:GND	OUTPUT	ON	Stop	1		
			A10	Exit Exhaust Fan - Right Rear:24V	Power			3	CN935	Exit Exhaust Fan - Right
			A11	Exit Exhaust Fan - Right Rear:LOCK	INPUT	ON	lock	2		
			A12	Exit Exhaust Fan - Right Rear:GND	OUTPUT	ON	Stop	1		
			B1	NC				-	-	NC
			B2	NC				-		
			B3	NC				-		
			B4	Fusing Exhaust Fan under:24VS	Power			3	CN939	Fusing Exhaust Fan under
			B5	Fusing Exhaust Fan under:LOCK	INPUT	ON	lock	2		
			B6	Fusing Exhaust Fan under:ON	OUTPUT	ON	Stop	1		
			B7	Fusing Exhaust Fan upper:24VS	Power			3	CN938	Fusing Exhaust Fan upper
			B8	Fusing Exhaust Fan upper:LOCK	INPUT	ON	lock	2		
			B9	Fusing Exhaust Fan upper:ON	OUTPUT	ON	Stop	1		
			B10	Fusing Transport Exhaust Fan:24VS	Power			3	CN1011	Fusing Transport Exhaust Fan
			B11	Fusing Transport Exhaust Fan:LOCK	INPUT	ON	lock	2		
			B12	Fusing Transport Exhaust Fan:ON	OUTPUT	ON	Stop	1		
77	EDRB: Relay	CN944	1	Duplex Lower Cooling Fan - Front:24V				3	CN936	Duplex Lower Cooling Fan - Front
			2	Duplex Lower Cooling Fan - Front:LOCK				2		
	CN944		3	Duplex Lower Cooling Fan - Front:GND				1		
			4	Duplex Lower Cooling Fan - Rear:24V				3	CN937	Duplex Lower Cooling Fan - Rear
			5	Duplex Lower Cooling Fan - Rear:LOCK				2		
			6	Duplex Lower Cooling Fan - Rear:GND				1		
81	Heating Roller Lamps : Relay	CN1097	1	Heating Roller Lamps 1N(Heating Roller Center A)				1	CN1061	AC PCB
			2	Heating Roller Lamps 2N(Heating Roller End Spread Size A)				2		
	CN1090		5	Heating Roller Lamps 3N(Heating Roller End A)				3		
			6	Heating Roller Lamps 4N(AuxiliaryB)				4		
			3	Heating Roller Lamps 1,2L				1	CN1066	AC PCB
			4	Heating Roller Lamps 3,4L				3		
	NC	-	-	NC				2		
			-	NC				30	CN216	IOB
	NC	CN746	1	NC				29		
			2	NC				28		
			3	NC				27		
			4	NC				26		
			5	NC				25		
			6	NC				24		
			7	NC				23		
			8	NC				22		
	NC Temperature Sensor (Heating Roller Center) : Relay		9	NC Temperature Sensor (Heating Roller Center) :Compensation				21		
			10	NC Temperature Sensor (Heating Roller Center) : Sensor				20		
	CN746		11	NC Temperature Sensor (Heating Roller Center) :GND				19		
	NC Temperature Sensor (Heating Roller End) :		12	NC Temperature Sensor (Heating Roller End) :Compensation				18		
			13	NC Temperature Sensor (Heating Roller End) : Sensor				17		
	CN746		14	NC Temperature Sensor (Heating Roller End) :GND				16		
	Hot Roller NC Sensor: Relay		15	Hot Roller NC Sensor:Compensation				15		
			16	Hot Roller NC Sensor: Sensor				14		
	CN746		17	Hot Roller NC Sensor:GND				13		
	Heating Roller Thermistor (Rear): Relay		18	Heating Roller Thermistor (Rear)				12		
	CN746		19	Heating Roller Thermistor (Rear):GND				11		
	Fusing Winding Sensor: Relay	CN747	1	Fusing Winding Sensor:GND				10		
			2	Fusing Winding Sensor: Output				9		
	CN747		3	Fusing Winding Sensor:+5V				8		
	Fusing Exit Sensor: Relay		4	Fusing Exit Sensor (Rear):GND				7		
			5	Fusing Exit Sensor (Rear): Output				6		
			6	Fusing Exit Sensor (Rear):+5V				5		
	NC		7	NC				-	-	NC
			8	NC						
			9	NC						
			10	NC						
			11	NC						
			12	NC						
			13	NC						
	Set Sensor:		14	Set Sensor (NA)				4	CN216	IOB
			15	Set Sensor (EU)				3		
	CN747		16	Set Sensor (DOM)				2		
			17	Set Sensor:GND				1		
93	Pressure Roller Fusing Lamp : Relay	CN1065	1	FG				1	T178	FG
			2	NC				-	-	NC
	CM1095		3	NC						
			4	Pressure Roller Fusing Lamp 5N				2	CN1079	AC Drive
			5	Pressure Roller Fusing Lamp 5L				1		
			6	NC				-	-	NC
	NC	-	-	NC				40	CN217	IOB
			-	NC				39		
			-	NC				38		
			-	NC				37		
			-	NC				36		
			-	NC				35		
			-	NC				34		

			A7	Inverter Entrance Motor:-B Phase				9		Inverter Entrance Motor
			A8	Inverter Entrance Motor:24VS	Power			8		
			A9	Inverter Entrance Motor:B Phase				7		
			A10	Inverter Entrance Motor:-A Phase				6		
			A11	Inverter Entrance Motor:24VS	Power			5		
			A12	Inverter Entrance Motor:A Phase				4		
	NC	-	-	NC				3		NC
			-	NC				2		
			-	NC				1		
	EDRB	CN289	1	Fusing Release Rotation Sensor:A Phase				6	CN951	Fusing Release Rotation Sensor
			2	Fusing Release Rotation Sensor:24VS	Power			5		
			3	Fusing Release Rotation Sensor:-A Phase				4		
			4	Fusing Release Rotation Sensor:B Phase				3		
			5	Fusing Release Rotation Sensor:24VS	Power			2		
			6	Fusing Release Rotation Sensor:-B Phase				1		
			7	Duplex Invert Motor:A Phase				6	CN952	Duplex Invert Motor
			8	Duplex Invert Motor:24VS	Power			5		
			9	Duplex Invert Motor:-A Phase				4		
			10	Duplex Invert Motor:B Phase				3		
			11	Duplex Invert Motor:24VS	Power			2		
			12	Duplex Invert Motor:-B Phase				1		
73	EDRB	CN283	A1	Fusing Cooling Fan - Left Rear:24V	Power			3	CN932	Fusing Cooling Fan - Left
			A2	Fusing Cooling Fan - Left Rear:LOCK	INPUT	ON	lock	2		
			A3	Fusing Cooling Fan - Left Rear:GND	OUTPUT	ON	Stop	1		
			A4	Fusing Cooling Fan - Right Rear:24V	Power			3	CN933	Fusing Cooling Fan - Right Rear
			A5	Fusing Cooling Fan - Right Rear:LOCK	INPUT	ON	lock	2		
			A6	Fusing Cooling Fan - Right Rear:GND	OUTPUT	ON	Stop	1		
			A7	Exit Exhaust Fan - Left Rear:24V	Power			3	CN934	Exit Exhaust Fan - Left Rear

harness No	Connector (FROM) To Connector	No	Pin No	Signal Information: Signal Name	Direction	L	H	Connector (TO) No	Pin No	To Connector
82	Pressure Roller Cam HP Sensor : Relay		6	Pressure Roller Cam HP Sensor A:GND				22		
			7	Pressure Roller Cam HP Sensor A: Output				21		
	CN748		8	Pressure Roller Cam HP Sensor A:5V				20		
			9	Pressure Roller Cam HP Sensor B:GND				19		
			10	Pressure Roller Cam HP Sensor B: Output				18		
			11	Pressure Roller Cam HP Sensor B:5V				17		
	Fusing Unit Paper Sensor: Relay		12	Fusing Unit Paper Sensor:GND				16		
			13	Fusing Unit Paper Sensor: Output				15		
	CN748		14	Fusing Unit Paper Sensor:5V				14		
	Fusing Exit Sensor (Center) :		15	Fusing Exit Sensor (Center) :GND				13		
			16	Fusing Exit Sensor (Center) : Output				12		
	CN748		17	Fusing Exit Sensor (Center) :5V				11		
	Fusing UNIT Set Sensor: Relay		18	Fusing UNIT Set Sensor				10		
	CN748		19	Fusing UNIT Set Sensor:GND				9		
	Pressure Roller NC Sensor: Relay	CN749	1	Pressure Roller NC Sensor:Compensation				8		
			2	Pressure Roller NC Sensor:Detection				7		
	CN749		3	Pressure Roller NC Sensor:GND				6		
	Thermistor Pressure: Relay		4	Thermistor Pressure				5		
			5	Thermistor Pressure:GND				4		
	CN749		6	NC				3		
			7	NC				2		
			8	NC				1		
			9	NC				-	-	NC
			10	NC				-		
			11	NC				-		
			12	NC				-		
			13	NC				-		
			14	NC				-		
			15	NC				-		
			16	NC				-		
			17	NC				-		
	Power Coad	INLET	L	AC_IN_L				-	T111	Circuit Breaker
			N	AC_IN_N				-	T112	
			E	EARTH				-	T113	Protection Earth
91	NC	-	-	NC				19	CN1068	IOB
	ACPCB	CN405	1	Fusing Heater Trigger5	INPUT	OFF	ON	18		
			2	Fusing Heater Trigger4	INPUT	OFF	ON	17		
			3	Fusing Heater Trigger3	INPUT	OFF	ON	16		
			4	Fusing Heater Trigger2	INPUT	OFF	ON	15		
			5	Fusing Heater Trigger1	INPUT	OFF	ON	14		
			6	ACDrive:GND	Ground			13		
			7	Zero-cross Signal	OUTPUT			12		
			8	ACDrive:5VL	Power			11		
			9	Heater Trigger	INPUT	OFF	ON	10		
			10	AC Voltage Sensor Circuit Power:24V	Power			9		
			11	AC Voltage Sensor date	OUTPUT			8		
			12	Power Relay Trigger-2(Low-side)	INPUT			7		
			13	Test Jig :5V	Power			6		
			14	Power Relay Trigger-1(High-side)	INPUT			5		
			15	Test Jig :24V	Power			4		
			16	Test Trigger(AC Junction Gate RLY Drive :5V)	INPUT			3		
			17	Energy saving Trigger(PONENG)	INPUT	ON	OFF	2		
			18	Test Trigger(Fusing RLY Drive :24V)	Power			1		
	NC	-	-	NC				3	CN1069	PSU-A
	ACPCB	CN405	19	AC Junction Gate RLY Drive Power5V	Power			2		
			20	PSU_A(Charis) GND	Ground			1		
93	ACPCB	CN408	1	PSU_A Charis-C1(H)				1	CN1067	PSU-A
			2	PSU_B Charis-C1(H)				2		PSU-B
			3	PSU_C Taurus-C1(H)				3		PSU-C
			4	PSU_A Charis-C1(N)				6		PSU-A
			5	PSU_B Charis-C1(N)				7		PSU-B
			6	PSU_C Taurus-C1(N)				8		PSU-C
	NC	-	-	NC				4		NC
			-	NC				5		
	ACPCB	CN402	1	NC				-	-	NC
			2	LCT Heater H				3	CN1063	Heater
			3	Paper Feed Heater (under) H				2		
			4	Paper Feed Heater (upper) H				1		
			5	NC				-	-	NC
			6	NC				-		
			7	LCT Heater L				6	CN1063	Heater
			8	Paper Feed Heater (under) L				5		
			9	Paper Feed Heater (upper) L				4		
		CN403	1	NC				-	-	NC
			2	NC				-		
			3	ITB Heater H				1	CN1070	ITB Heater
			4	Scanner Heater H				1	CN1065	Scanner Heater
			5	LCT Heater H				3	CN1064	LCT Heater
			6	Paper Feed Heater (under) H				2		Paper Feed Heater (under)
			7	Paper Feed Heater (upper) H				1		Paper Feed Heater (upper)

			-	NC				33			
			-	NC				32			
			-	NC				31			
			-	NC				30			
			-	NC				29			
			-	NC				28			
82	Fusing Cleaning Web Motor: Relay CN748	CN748	1	Fusing Cleaning Web Motor(DC):Black				27			
			2	Fusing Cleaning Web Motor(DC):Red				26			
	Fusing Cleaning Web End Sensor: Relay CN748		3	Fusing Cleaning Web End Sensor:GND				25			
			4	Fusing Cleaning Web End Sensor: Output				24			
			5	Fusing Cleaning Web End Sensor:5V				23			

harness No	Connector (FROM) To Connector	No	Pin No	Signal Information: Signal Name	Direction	L	H	Connector (TO) No	Pin No	To Connector
93		CN406	1	Heater1(N)				1	CN1061	Fusing Heater
			2	Heater2(N)				2		
			3	Heater3(N)				3		
			4	Heater4(N)				4		
		CN407	1	Heater5HOT(H)				1	CN1079	Fusing Heater
			3	Heater5(N)				2		
			2	NC				-	-	NC
94	AC PCB	CN401	1	Main Switch out (H)				1	CN1062	AC Power Switch
			2	Main Switch out (N)				2		
			3	Main Switch in (H)				3		
			4	Main Switch in (N)				4		
40	Circuit Breaker	CN1080	1	Breaker ～ Noise Filer(H)				1	CN1082	Noise Filer
		CN1081	1	Breaker ～ Noise Filer(N)				1	CN1083	
101	IOB: Relay D1795241A CN801	CN803	1	NC				-	-	NC
			2	Separation Power Pack:24V				A16	CN261	DRB
			3	Separation Power Pack:GND				A15		
			4	Separation Power Pack:AC_PWM				A14		
			5	Separation Power Pack:DC_PWM				A13		
			6	Separation Power Pack:SC				A12		
			7	Registration Gate Motor:CD2				A11		
			8	Registration Gate Motor:CD				A10		
			9	Registration Gate Motor:EN				A9		
			10	Registration Gate Motor:CW				A8		
			11	Registration Gate Motor:CLK				A7		
			12	Registration Entrance Motor:CD				A6		
			13	Registration Entrance Motor:EN				A5		
			14	Registration Entrance Motor:CW				A4		
			15	Registration Entrance Motor:CLK				A3		
			16	PTR Cooling Fan:LOC				A2		
			17	PTR Cooling Fan:DR				A1		
	IOB: Relay CN802	CN804	1	Trailing Edge Shift Motor:CLK				B16		
			2	Trailing Edge Shift Motor:CW				B15		
			3	Trailing Edge Shift Motor:EN				B14		
			4	Trailing Edge Shift Motor:CD				B13		
			5	Transfer timing Motor:CLK				B12		
			6	Transfer timing Motor:CW				B11		
			7	Transfer timing Motor:EN				B10		
			8	Transfer timing Motor:CD				B9		
			9	Registration Timing Motor:CD				B8		
			10	Registration Timing Motor:EN				B7		
			11	Registration Timing Motor:CW				B6		
			12	Registration Timing Motor:CLK				B5		
			13	Registration Shift Motor:CD				B4		
			14	Registration Shift Motor:EN				B3		
			15	Registration Shift Motor:CW				B2		
			16	Registration Shift Motor:CLK				B1		
102	RYB: Relay CN805	CN805	1	+24VS				1	CN260	DRB
			2	GND				3		
			3	+5V				5		
			4	NC				-	-	NC
			5	GND				4	CN260	DRB
			6	+24VS				2		
	IOB: Relay CN806	CN808	1	TH Transport Motor:CD				A12	CN262	DRB
			2	TH Transport Motor:EN				A11		
			3	TH Transport Motor:CW				A10		
			4	TH Transport Motor:CLK				A9		
			5	Duplex Transport Motor2:CD				A8		
			6	Duplex Transport Motor2:EN				A7		
			7	Duplex Transport Motor2:CW				A6		
			8	Duplex Transport Motor2:CLK				A5		
			9	LCIT Relay Separation Motor:CD				A4		
			10	LCIT Relay Separation Motor:EN				A3		
			11	LCIT Relay Separation Motor:CW				A2		
			12	LCIT Relay Separation Motor:CLK				A1		
	IOB: Relay CN807	CN809	1	Main Relay Separation Motor:CD				B12		
			2	Main Relay Separation Motor:EN				B11		
			3	Main Relay Separation Motor:CW				B10		
			4	Main Relay Separation Motor:CLK				B9		
			5	PTR Cooling Fan - Front:Lock				B8		
			6	PTR Cooling Fan - Front:DR				B7		
			7	PTR Cooling Fan - Rear:Lock				B6		
			8	PTR Cooling Fan - Rear:DR				B5		
			9	IOB_RESET				B4		
			10	(Transfer timing Motor:CD2)				B3		
			11	NC				B2		
	NC	-	-	NC				B1		
103	IOB: Relay CN810	CN810	1	NC				-	-	NC
			2	NC				-		
	IOB: Relay CN811	CN813	1	NC				-	-	NC
			2	Paper Transport Fan - Front:Lock				A19	CN263	DRB
			3	Paper Transport Fan - Front:DR				A18		
			4	Paper Transport Fan - Rear:Lock				A17		
			5	Paper Transport Fan - Rear:DR				A16		
			6	Motor Driver Error				A15		
			7	DRB Set Sensor				A14		
			8	Sending Signal Drive Wave(-A Phase)				A13		
			9	Sending Signal Drive Wave(A Phase)				A12		
			10	Double-Feed Sensors Output Signal				A11		
			11	(Double-Feed Sensors Sub)				A10		
			12	Double-Feed Sensors Sensitivity Sensor Signal				A9		
			13	Gain Change Signal2				A8		
			14	Gain Change Signal1				A7		
			15	Double-Feed Sensors Detection CLR Signal				A6		
			16	CIS:COMP_TH				A5		
			17	CIS:LED_PWM				A4		
			18	CIS:DIN				A3		
			19	CIS:SYNC				A2		
			20	CIS:CLK				A1		
	IOB: Relay CN812	CN814	1	PTB Sensor				B19		
			2	Duplex Unit Exit Sensor				B18		
			3	Duplex Transport Sensor6				B17		
			4	Duplex Transport Sensor5				B16		
			5	Duplex Transport Sensor4				B15		
			6	Registration Shift HP Sensor				B14		
			7	Rotary Gate HP Sensor				B13		
			8	Trailing Edge Shift HP Sensor				B12		
			9	LCIT Relay Separation Motor				B11		
			10	Main Relay Separation HP Sensor				B10		
			11	Main Relay Sensor				B9		
			12	LCTRelay Sensor				B8		
			13	Transfer Timing Sensor				B7		
			14	Registration Timing Sensor				B6		
			15	Registration Entrance Sensor				B5		
			16	Driver IC Cooling FAN:Lock				B4		

			8	For Short Harness				9	CN403	AC Drive
			10	NC				-	-	NC
			11	ITB Heater L				2	CN1070	ITB Heater
			12	Scanner Heater L				2	CN1065	Scanner Heater
			13	LCT Heater L				6	CN1064	LCT Heater
			14	Paper Feed Heater (under) L				5		Paper Feed Heater (under)
			15	Paper Feed Heater (upper) L				4		Paper Feed Heater (upper)
		CN404	1	Heater1,2HOT(H)				1	CN1066	Fusing Heater
			2	NC				2		
			3	Heater3,4HOT(H)				3		

harness No	Connector (FROM) To Connector	No	Pin No	Signal Information: Signal Name	Direction	L	H	Connector (TO) No	Pin No	To Connector
104	DRB	CN264	1	Registration Entrance Motor:A	OUTPUT			12	CN820	Registration Entrance Motor
			2	Registration Entrance Motor:+24VS	Power			11		
			3	Registration Entrance Motor:-A	OUTPUT			10		
			4	Registration Entrance Motor:B	OUTPUT			9		
			5	Registration Entrance Motor:+24VS	Power			8		
			6	Registration Entrance Motor:-B	OUTPUT			7		
			7	Registration Timing Motor:A	OUTPUT			6		Registration Timing Motor
			8	Registration Timing Motor:+24VS	Power			5		
			9	Registration Timing Motor:-A	OUTPUT			4		
			10	Registration Timing Motor:B	OUTPUT			3		
			11	Registration Timing Motor:+24VS	Power			2		
			12	Registration Timing Motor:-B	OUTPUT			1		
		CN265	1	Transfer timing Motor:A	OUTPUT			6	CN821	Transfer timing Motor
			2	Transfer timing Motor:+24VS	Power			5		
			3	Transfer timing Motor:-A	OUTPUT			4		
			4	Transfer timing Motor:B	OUTPUT			3		
			5	Transfer timing Motor:+24VS	Power			2		
			6	Transfer timing Motor:-B	OUTPUT			1		
		CN266	1	Rotary gate STM:A	OUTPUT			6	CN822	Rotary gate STM
			2	Rotary gate STM:+24VS	Power			5		
			3	Rotary gate ｰSTM:-A	OUTPUT			4		
			4	Rotary gate STM:B	OUTPUT			3		
			5	Rotary gate STM:+24VS	Power			2		
			6	Rotary gate STM:-B	OUTPUT			1		
107	DRB	CN271	1	LCTRelay Sensor:GND	Ground			3	CN823	LCTRelay Sensor
			2	LCTRelay Sensor:Vout	INPUT	Detect	Not Detect	2		
			3	LCTRelay Sensor:+5V	Power			1		
108	DRB	CN267	A1	Duplex Transport Motor2:A	OUTPUT			6	CN826	Duplex Transport Motor2
			A2	Duplex Transport Motor2:+24VS	Power			5		
			A3	Duplex Transport Motor2:-A	OUTPUT			4		
			A4	Duplex Transport Motor2:B	OUTPUT			3		
			A5	Duplex Transport Motor2:+24VS	Power			2		
			A6	Duplex Transport Motor2:-B	OUTPUT			1		
			A7	Trailing Edge Shift Motor:A	OUTPUT			6	CN838	Trailing Edge Shift Motor
			A8	Trailing Edge Shift Motor:+24VS	Power			5		
			A9	Trailing Edge Shift Motor:-A	OUTPUT			4		
			A10	Trailing Edge Shift Motor:B	OUTPUT			3		
			A11	Trailing Edge Shift Motor:+24VS	Power			2		
			A12	Trailing Edge Shift Motor:-B	OUTPUT			1		
			B1	Main Relay Separation Motor:A	OUTPUT			12	CN824	Main Relay Separation
			B2	Main Relay Separation Motor:+24VS	Power			11		
			B3	Main Relay Separation Motor:-A	OUTPUT			10		
			B4	Main Relay Separation Motor:B	OUTPUT			9		
			B5	Main Relay Separation Motor:+24VS	Power			8		
			B6	Main Relay Separation Motor:-B	OUTPUT			7		
			B7	LCIT Relay Separation Motor:A	OUTPUT			6		LCIT Relay Separation
			B8	LCIT Relay Separation Motor:+24VS	Power			5		
			B9	LCIT Relay Separation Motor:-A	OUTPUT			4		
			B10	LCIT Relay Separation Motor:B	OUTPUT			3		
			B11	LCIT Relay Separation Motor:+24VS	Power			2		
			B12	LCIT Relay Separation Motor:-B	OUTPUT			1		
109	DRB	CN268	1	TH Transport Motor:+24VS	Power			6	CN868	TH Transport Motor
			2	TH Transport Motor:A	OUTPUT			5		
			3	TH Transport Motor:-A	OUTPUT			4		
			4	TH Transport Motor:+24VS	Power			3		
			5	TH Transport Motor:B	OUTPUT			2		
			6	TH Transport Motor:-B	OUTPUT			1		
			7	Registration Shift Motor:A	OUTPUT			6	CN837	Registration Shift Motor
			8	Registration Shift Motor:+24VS	Power			5		
			9	Registration Shift Motor:-A	OUTPUT			4		
			10	Registration Shift Motor:B	OUTPUT			3		
			11	Registration Shift Motor:+24VS	Power			2		
			12	Registration Shift Motor:-B	OUTPUT			1		
			13	NC				-	-	NC
110	DRB	CN269	1	+24VS	Power			8	CN827	CRB
			2	LED_PWM	OUTPUT			7		
			3	+5V	Power			6		
			4	CIS_CLK	OUTPUT			5		
			5	CIS_SYNC	OUTPUT			4		
			6	GND	Ground			3		
			7	CIS_D	INPUT			2		
			8	COMP_TH	OUTPUT			1		
			9	NC				-	-	NC
111	DRB	CN270	1	Main Relay Separation HP Sensor:GND	Ground			15	CN828	Main Relay Separation HP Sensor
			2	Main Relay Separation HP Sensor:Vout	INPUT	Detect	Not Detect	14		
			3	Main Relay Separation HP Sensor:+5V	Power			13		
			4	Main Relay Sensor:GND	Ground			12		Main Relay Sensor
			5	Main Relay Sensor:Vout	INPUT	Detect	Not Detect	11		
			6	Main Relay Sensor:+5V	Power			10		
			7	LCIT Relay Separation Motor:GND	Ground			9		LCIT Relay Separation
			8	LCIT Relay Separation Motor:Vout	INPUT	Detect	Not Detect	8		
			9	LCIT Relay Separation Motor:+5V	Power			7		
			10	Registration Entrance Sensor:GND	Ground			6		Registration Entrance
			11	Registration Entrance Sensor:Vout	INPUT	Detect	Not Detect	5		
			12	Registration Entrance Sensor:+5V	Power			4		
			13	Registration Timing Sensor:GND	Ground			3		Registration Timing Sensor
			14	Registration Timing Sensor:Vout	INPUT	Detect	Not Detect	2		
			15	Registration Timing Sensor:+5V	Power			1		
			16	Trailing Edge Shift HP Sensor:GND	Ground			3	CN848	Trailing Edge Shift HP
			17	Trailing Edge Shift HP Sensor:Vout	INPUT	Detect	Not Detect	2		
			18	Trailing Edge Shift HP Sensor:+5V	Power			1		
112	DRB	CN272	1	Duplex Transport Sensor4:GND	Ground			12	CN830	Duplex Transport Sensor4
			2	Duplex Transport Sensor4:Vout	INPUT	Detect	Not Detect	11		
			3	Duplex Transport Sensor4:+5V	Power			10		
			4	Duplex Transport Sensor5:GND	Ground			9		Duplex Transport Sensor5
			5	Duplex Transport Sensor5:Vout	INPUT	Detect	Not Detect	8		
			6	Duplex Transport Sensor5:+5V	Power			7		
			7	Duplex Transport Sensor6:GND	Ground			6		Duplex Transport Sensor6
			8	Duplex Transport Sensor6:Vout	INPUT	Detect	Not Detect	5		
			9	Duplex Transport Sensor6:+5V	Power			4		
			10	Duplex Unit Exit Sensor:GND	Ground			3		Duplex Unit Exit Sensor
			11	Duplex Unit Exit Sensor:Vout	INPUT	Detect	Not Detect	2		
			12	Duplex Unit Exit Sensor:+5V	Power			1		
			13	NC				-	-	NC
113	DRB	CN273	1	Sending Signal Drive Wave Output(-A Phase)	OUTPUT			10	CN831	Double-Feed Sensors
			2	Sending Signal Drive Wave Output(A Phase)	OUTPUT			9		
		CN274	1	NC				8		
			2	NC				7		
			3	Gain switch Signal2	OUTPUT			6		
			4	GND	Ground			5		
			5	Detection CLR Signal	OUTPUT			4		
			6	Double-Feed Sensors Output Signal	INPUT			3		
			7	Sensitivity Sensor Signal	INPUT			2		
			8	+5V	Power			1		

harness No	Connector (FROM) To Connector	Connector (FROM) No	Pin No	Signal Information: Signal Name	Direction	L	H	Connector (TO) No	Connector (TO) Pin No	Connector (TO) To Connector
			17	Driver IC Cooling FAN:DR				B3		
			18	NC				B2		
			19	NC				B1		
			4	Registration Entrance Motor:B				3		
			5	Registration Entrance Motor:+24VS				2		
			6	Registration Entrance Motor:-B				1		
			7	Registration Timing Motor:A				6	CN834	Registration Timing Motor
			8	Registration Timing Motor:+24VS				5		
			9	Registration Timing Motor:-A				4		
			10	Registration Timing Motor:B				3		
			11	Registration Timing Motor:+24VS				2		
			12	Registration Timing Motor:-B				1		
115	DRB: Relay	CN821	1	Transfer timing Motor:A				6	CN835	Transfer timing Motor
			2	Transfer timing Motor:+24VS				5		
	CN821		3	Transfer timing Motor:-A				4		
			4	Transfer timing Motor:B				3		
			5	Transfer timing Motor:+24VS				2		
			6	Transfer timing Motor:-B				1		
104	DRB: Relay	CN822	1	Rotary gate STM:A				6	CN836	Rotary gate STM
			2	Rotary gate STM:+24VS				5		
	CN822		3	Rotary gate ⊢STM:-A				4		
			4	Rotary gate STM:B				3		
			5	Rotary gate STM:+24VS				2		
			6	Rotary gate STM:-B				1		
116	DRB: Relay	CN867	1	LCTRelay Sensor:GND				3	CN842	LCTRelay Sensor
			2	LCTRelay Sensor:Vout				2		
	CN867		3	LCTRelay Sensor:+5V				1		
117	DRB: Relay	CN824	1	Main Relay Separation Motor:A				6	CN839	Main Relay Separation
			2	Main Relay Separation Motor:+24VS				5		
	CN824		3	Main Relay Separation Motor:-A				4		
			4	Main Relay Separation Motor:B				3		
			5	Main Relay Separation Motor:+24VS				2		
			6	Main Relay Separation Motor:-B				1		
			7	LCIT Relay Separation Motor:A				6	CN840	LCIT Relay Separation
			8	LCIT Relay Separation Motor:+24VS				5		
			9	LCIT Relay Separation Motor:-A				4		
			10	LCIT Relay Separation Motor:B				3		
			11	LCIT Relay Separation Motor:+24VS				2		
			12	LCIT Relay Separation Motor:-B				1		
118	DRB: Relay	CN825	1	Paper Transport Fan - Front:+24VS				6	CN854	Paper Transport Fan - Front
			2	Paper Transport Fan - Front:Lock				5		
	CN825		3	Paper Transport Fan - Front:GND				4		
			4	Paper Transport Fan - Rear:+24VS				3		Paper Transport Fan - Rear
			5	Paper Transport Fan - Rear:Lock				2		
			6	Paper Transport Fan - Rear:GND				1		
	DRB: Relay	CN852	1	PTB Sensor:GND				3	CN855	PTB Sensor
			2	PTB Sensor:Vout				2		
	CN852		3	PTB Sensor:+5V				1		
119	DRB: Relay	CN826	1	Duplex Transport Motor2:A				6	CN859	Duplex Transport Motor2
			2	Duplex Transport Motor2:+24VS				5		
	CN826		3	Duplex Transport Motor2:-A				4		
			4	Duplex Transport Motor2:B				3		
			5	Duplex Transport Motor2:+24VS				2		
			6	Duplex Transport Motor2:-B				1		
120	DRB: Relay	CN827	1	+24VS				9	CN341	CRB
			2	LED_PWM				8		
	CN827		3	+5V				7		
			4	CIS_CLK				6		
			5	CIS_SYNC				5		
			6	GND				4		
			7	CIS_D				3		
			8	COMP_TH				2		
	NC	-	-	NC				1		
121	DRB: Relay	CN828	1	Main Relay Separation HP Sensor:GND				3	CN844	Main Relay Separation HP Sensor
			2	Main Relay Separation HP Sensor:Vout				2		
	CN828		3	Main Relay Separation HP Sensor:+5V				1		
			4	Main Relay Sensor:GND				3	CN843	Main Relay Sensor
			5	Main Relay Sensor:Vout				2		
			6	Main Relay Sensor:+5V				1		
			7	LCIT Relay Separation Motor:GND				3	CN845	LCIT Relay Separation
			8	LCIT Relay Separation Motor:Vout				2		
			9	LCIT Relay Separation Motor:+5V				1		
			10	Registration Entrance Sensor:GND				3	CN865	Registration Entrance
			11	Registration Entrance Sensor:Vout				2		
			12	Registration Entrance Sensor:+5V				1		
			13	Registration Timing Sensor:GND				3	CN846	Registration Timing Sensor
			14	Registration Timing Sensor:Vout				2		
			15	Registration Timing Sensor:+5V				1		
122	DRB: Relay	CN829	1	Rotary gate HP Sensor:GND				3	CN850	Rotary gate HP Sensor
			2	Rotary gate HP Sensor:Vout				2		
	CN829		3	Rotary gate HP Sensor:+5V				1		
			4	Transfer Timing Sensor:GND				3	CN851	Transfer Timing Sensor
			5	Transfer Timing Sensor:Vout				2		
			6	Transfer Timing Sensor:+5V				1		
123	DRB: Relay	CN830	1	Duplex Transport Sensor4:GND				3	CN860	Duplex Transport Sensor4
			2	Duplex Transport Sensor4:Vout				2		
	CN830		3	Duplex Transport Sensor4:+5V				1		
			4	Duplex Transport Sensor5:GND				3	CN861	Duplex Transport Sensor5
			5	Duplex Transport Sensor5:Vout				2		
			6	Duplex Transport Sensor5:+5V				1		
			7	Duplex Transport Sensor6:GND				3	CN862	Duplex Transport Sensor6
			8	Duplex Transport Sensor6:Vout				2		
			9	Duplex Transport Sensor6:+5V				1		
			10	Duplex Unit Exit Sensor:GND				3	CN863	Duplex Unit Exit Sensor
			11	Duplex Unit Exit Sensor:Vout				2		
			12	Duplex Unit Exit Sensor:+5V				1		
124	DRB: Relay	CN831	1	Sending Signal Drive Wave Output(-A Phase)				8	CN866	Double-Feed Sensors
			2	Sending Signal Drive Wave Output(A Phase)				7		
	CN831		5	Gain switch Signal2				6		
			6	GND				5		
			7	Detection CLR Signal				4		
			8	Double-Feed Sensors Output Signal				3		
			9	Sensitivity Sensor Signal				2		
			10	+5V				1		
			3	NC				-	-	NC
			4	NC				-		
125	DRB: Relay	CN854	1	Paper Transport Fan - Front:+24VS				3	CN856	Paper Transport Fan - Front
			2	Paper Transport Fan - Front:LOCK				2		
	CN854		3	Paper Transport Fan - Front:ON				1		
			4	Paper Transport Fan - Rear:+24VS				3	CN857	Paper Transport Fan - Rear
			5	Paper Transport Fan - Rear:LOCK				2		
			6	Paper Transport Fan - Rear:ON				1		

harness No	Connector (FROM) To Connector	Connector (FROM) No	Pin No	Signal Information: Signal Name	Direction	L	H	Connector (TO) No	Connector (TO) Pin No	Connector (TO) To Connector
			8	GND	Ground			6		1st Tray Paper End Sensor
			9	1st Tray Paper End Sensor	INPUT	Detect	Not Detect	5		
			10	+5V	Power			4		
			11	GND	Ground			3		1st Tray Feed Sensors
			12	1st Tray Feed Sensors	INPUT	Detect	Not Detect	2		
			13	+5V	Power			1		

harness No	Connector (FROM) To Connector	Connector (FROM) No	Pin No	Signal Information: Signal Name	Direction	L	H	Connector (TO) No	Connector (TO) Pin No	Connector (TO) To Connector
114	DRB: Relay	CN820	1	Registration Entrance Motor:A				6	CN833	Registration Entrance Motor
			2	Registration Entrance Motor:+24VS				5		
	CN820		3	Registration Entrance Motor:-A				4		
126	CRB	CN342	1	NC				-	-	NC
			2	CIS:24VS				7	CN832	CIS
			3	LED_PWM				6		
			4	CIS:5VS				3		
			5	CIS_CLK				5		
			6	CIS_SYNC				4		
			7	CIS:GND				2		
			8	CIS_AD				1		
127	DRB: Relay	CN866	1	Sending Signal Drive Wave Output(-A Phase)				2	CN248	UTB
			2	Sending Signal Drive Wave Output(A Phase)				1		
	CN866		3	Gain switch Signal2				6	CN275	URRB
			4	GND				5		
			5	Detection CLR Signal				4		
			6	Double-Feed Sensors Output Signal				3		
			7	Sensitivity Sensor Signal				2		
			8	+5V				1		
	NC	-	-	NC				7		
128	Power Pack D	T176	1	D Output				1	T177	Static charge eliminator
129	IOB: Relay	CN1004	16	NC				-	-	NC
			15	TD Sensor SCL				1	CN1002	TD Sensor
	CN1104		14	TD Sensor SDA				2		
			13	TD Sensor Vcnt				3		
			12	TD Sensor Vcc(+5V)				4		
			11	TD Sensor Vout				5		
			10	TD Sensor GND				6		
			9	PCL VAA(+24V)				2	CN1003	PCL
			8	Sheet Metal Float Prevention GND				1	T1	FG
			7	NC				-	-	NC
			6	NC				-		
			5	NC				-		
			4	NC				-		
			3	Developing Drawer Set Sensor				2	CN1004	Set Sensor
			1	PCL:Drive				1	CN1003	PCL
130	IOB: Relay	CN1002	6	TD Sensor SCL	OUTPUT			1	CN1035	TD Sensor
			5	TD Sensor SDA	OUTPUT			2		
	CN1002		4	TD Sensor Vcnt	OUTPUT			3		
			3	TD Sensor Vcc(+5V)	OUTPUT			4		
			2	TD Sensor Vout	INPUT			5		
			1	TD Sensor GND	Ground			6		
131	DRB: Relay	CN868	1	TH Transport Motor:+24VS				6	CN864	TH Transport Motor
			2	TH Transport Motor:A				5		
	CN868		3	TH Transport Motor:-A				4		
			4	TH Transport Motor:+24VS				3		
			5	TH Transport Motor:B				2		
			6	TH Transport Motor:-B				1		
132	FG	T141	1	FG	Ground			16	CN870	Tandem LCT - Right
	RYB	CN307	1	Tray Lock Solenoid	OUTPUT	ON	OFF	2	CN615	Tray Lock Solenoid
			2	+24V	Power			1		
			3	+24V(Front Side Fence Solenoid)	Power			1	CN870	Front Side Fence Solenoid
			4	+5V(Front Side Fence Open Sensor)	Power			2		Front Side Fence Open
			5	Front Side Fence Open Sensor	INPUT	Not Open	Open	3		
			6	GND(Front Side Fence Open Sensor)	Ground			4		
			7	+5V(Front Side Fence Close Sensor)	Power			5		Front Side Fence Close Sensor
			8	Front Side Fence Close Sensor	INPUT	Not Close	Close	6		
			9	GND(Front Side Fence Close Sensor)	Ground			7		
			10	+5V(Rear Side Fence Open Sensor)	Power			8		Rear Side Fence Open
			11	Rear Side Fence Open Sensor	INPUT	Not Open	Open	9		
			12	GND(Rear Side Fence Open Sensor)	Ground			10		
			13	+5V(Rear Side Fence Close Sensor)	Power			11		Rear Side Fence Close Sensor
			14	Rear Side Fence Close Sensor	INPUT	Not Close	Close	12		
			15	GND(Rear Side Fence Close Sensor)	Ground			13		
			16	Tandem Tray Set Sensor - Right	INPUT	Set	Not Set	14		Tandem Tray Set Sensor - Right
			17	Front Side Fence Open Solenoid	OUTPUT	ON	OFF	15		Front Side Fence Open Solenoid
			18	Rear Side Fence Open Solenoid	OUTPUT	ON	OFF	31		Rear Side Fence Open Solenoid
			19	GND	Ground			30		FG
			20	GND(Right Tray Paper Set)	Ground			29		Right Tray Paper Set Sensor
			21	Right Tray Paper Set Sensor	INPUT	Not Detect	Detect	28		
			22	+5V(Right Tray Paper Set)	Power			27		
			23	Paper Height Sensor4	INPUT			26		Paper Height Sensor4
			24	Paper Height Sensor3	INPUT			25		Paper Height Sensor3
			25	Paper Height Sensor2	INPUT			24		Paper Height Sensor2
			26	GND(Paper Height Sensor)	Ground			23		Paper Height Sensor
			27	Paper Height Sensor1	INPUT			22		Paper Height Sensor1
			28	+5V(Paper Height Sensor)	Power			21		Paper Height Sensor
			29	GND(Lower Limit Sensor)	Ground			20		Lower Limit Sensor
			30	Lower Limit Sensor	INPUT	Not Lower limit position	Lower limit position	19		
			31	+5V(Lower Limit Sensor)	Power			18		
			32	+24V(Rear Side Fence Solenoid)	Power			17		Rear Side Fence Solenoid
			33	NC				32		NC
			34	NC				-	-	NC
133	RYB	CN306	1	Rear Fence Drive MotorDrive1	OUTPUT			1	CN871	Rear Fence Drive Motor
			2	Left Tray Set Sensor	INPUT	Set	Not Set	2		Left Tray Set Sensor
			3	GND(Left Tray Set Sensor)	Ground			3		
			4	Rear Fence HP Sensor GND	Ground			5		Rear Fence HP Sensor
			5	Rear Fence HP Sensor	INPUT	Not Home position	Home position	6		
			6	Rear Fence HP Sensor VCC	Power			7		
			7	Rear Fence Drive MotorDrive2	OUTPUT			9		Rear Fence Drive Motor
			8	Rear Fence Return Sensor GND	Ground			10		Rear Fence Return Sensor
			9	Rear Fence Return Sensor	INPUT	Not Stated position	Stated position	11		
			10	Rear Fence Return Sensor VCC	Power			12		
			11	Left Tray Paper Set Sensor	INPUT	Detect	Not Detect	13		Left Tray Paper Set Sensor
			12	Left Tray Paper Set Sensor GND	Ground			14		
			13	Left Tray Paper Set Sensor VCC	Power			15		T1
	FG	T140	1	FG	Ground			8		NC
	NC	-	-	NC				4		
			-	NC				16		
	IOB: Relay	T101	1	Lubricant Detect R:GND				1	T103	Lubricant Detect
		T100	1	Lubricant Detect R				1	T102	Lubricant Detect
	CN1009	CN1009	1	Lubricant Detect F:GND				1	T101	Lubricant Detect
			2	Lubricant Detect F				1	T100	Lubricant Detect
			3	Drum Cleaning Set Sensor				4	CN1009	Drum Cleaning Set Sensor
136	RYB	CN310	1	+24V(Reservation)				13	CN725	(1st Tray Reverse Solenoid)
			2	1st Tray Reverse Solenoid(Reservation)				12		
			3	+24V	Power			11		1st Tray Pickup Solenoids
			4	1st Tray Pickup Solenoids	OUTPUT	ON	OFF	10		
			5	GND	Ground			9		1st Tray Paper Upper Limit Sensors
			6	1st Tray Paper Upper Limit Sensors	INPUT	Not Detect	Detect	8		
			7	+5V	Power			7		

harness No	Connector (FROM) To Connector	Connector (FROM) No	Pin No	Signal Information: Signal Name	Direction	L	H	Connector (TO) No	Connector (TO) Pin No	Connector (TO) To Connector
135			17	Toner Bottle Sensor - Right:GND	Ground			17		Toner Bottle Sensor - Right
			18	Toner Bottle Sensor - Right: Output	INPUT	Detect	Not Detect	16		
			19	Toner Bottle Sensor - Right:5V	Power			15		
			20	Bottle Inner Cap Motors - Right:H Bridge (Regular)	OUTPUT			14		Bottle Inner Cap Motors -
			21	Bottle Inner Cap Motors - Right:H Bridge (Reverse)	OUTPUT			13		
			22	NC				12		NC

			14	+24V(Reservation)				26		(2nd Tray Reverse Solenoid)
			15	2nd Tray Reverse Solenoid(Reservation)				25		
			16	+24V	Power			24		2nd Tray Pickup Solenoids
			17	2nd Tray Pickup Solenoids	OUTPUT	ON	OFF	23		
			18	GND	Ground			22		2nd Tray Paper Upper Limit Sensors
			19	2nd Tray Paper Upper Limit Sensors	INPUT	Not Detect	Detect	21		
			20	+5V	Power			20		
			21	GND	Ground			19		2nd Tray Paper End Sensor
			22	2nd Tray Paper End Sensor	INPUT	Detect	Not Detect	18		
			23	+5V	Power			17		
135			24	GND	Ground			16		2nd Tray Feed Sensors
			25	2nd Tray Feed Sensors	INPUT	Detect	Not Detect	15		
			26	+5V	Power			14		
	NC	-	-	NC				13	CN726	NC
			-	NC				12		
	RYB	CN311	1	+24V	Power			11		3rd Tray Pickup Solenoids
			2	3rd Tray Pickup Solenoids	OUTPUT	ON	OFF	10		
			3	GND	Ground			9		3rd Tray Paper Upper Limit Sensors
			4	3rd Tray Paper Upper Limit Sensors	INPUT	Not Detect	Detect	8		
			5	+5V	Power			7		
			6	GND	Ground			6		3rd Tray Paper End Sensor
			7	3rd Tray Paper End Sensor	INPUT	Detect	Not Detect	5		
			8	+5V	Power			4		
			9	GND	Ground			3		3rd Tray Feed Sensors
			10	3rd Tray Feed Sensors	INPUT	Detect	Not Detect	2		
			11	+5V	Power			1		
			12	NC				-	-	NC
			13	GND	Ground			12	CN714	Vertical Transport Sensor
			14	Vertical Transport Sensor	INPUT	Detect	Not Detect	11		
			15	+5V	Power			10		
			16	GND	Ground			9		1st Tray Transport Sensor
			17	1st Tray Transport Sensor	INPUT	Detect	Not Detect	8		
			18	+5V	Power			7		
			19	GND	Ground			6		2nd Tray Transport Sensor
			20	2nd Tray Transport Sensor	INPUT	Detect	Not Detect	5		
			21	+5V	Power			4		
			22	GND	Ground			3		3rd Tray Transport Sensor
			23	3rd Tray Transport Sensor	INPUT	Detect	Not Detect	2		
			24	+5V	Power			1		
	RYB	CN312	A1	1st Tray Lift Motor CW	OUTPUT			2	CN619	1st Tray Lift Motor
			A2	1st Tray Lift Motor CCW	OUTPUT			1		
			A3	2nd Tray Paper Height Sensor2	INPUT			5	CN620	2nd Tray Paper Height Sensor/Lift Motor
			A4	GND	Ground			4		
			A5	2nd Tray Paper Height Sensor1	INPUT			3		
			A6	2nd Tray Lift Motor CCW	OUTPUT			2		
			A7	2nd Tray Lift Motor CW	OUTPUT			1		
			B1	3rd Tray Paper Height Sensor2	INPUT			5	CN621	3rd Tray Paper Height Sensor/Lift Motor
			B2	GND	Ground			4		
			B3	3rd Tray Paper Height Sensor1	INPUT			3		
			B4	3rd Tray Lift Motor CCW	OUTPUT			2		
			B5	3rd Tray Lift Motor CW	OUTPUT			1		
			B6	Tandem Tray - Left Lock Solenoid	OUTPUT	ON	OFF	2	CN616	Tandem Tray - Left Lock Solenoid
			B7	+24V	Power			1		
	RYB	CN313	1	1st Tray LED1 Anode	Power			12	CN630	Tray LED
			2	1st Tray LED1 Cathode	OUTPUT	LED Light	LED Extinction	11		
			3	1st Tray LED2 Anode	Power			10		
			4	1st Tray LED2 Cathode	OUTPUT	LED Light	LED Extinction	9		
			5	2nd Tray LED1 Anode	Power			8		
			6	2nd Tray LED1 Cathode	OUTPUT	LED Light	LED Extinction	7		
			7	2nd Tray LED2 Anode	Power			6		
			8	2nd Tray LED2 Cathode	OUTPUT	LED Light	LED Extinction	5		
			9	3rd Tray LED1 Anode	Power			4		
			10	3rd Tray LED1 Cathode	OUTPUT	LED Light	LED Extinction	3		
			11	3rd Tray LED2 Anode	Power			2		
			12	3rd Tray LED2 Cathode	OUTPUT	LED Light	LED Extinction	1		
			13	+5V	Power			3	CN631	Purged Paper Sensor
			14	Purged Paper Sensor	INPUT	Not Detect	Detect	2		
			15	GND	Ground			1		
			16	NC				-	-	NC
			17	GND	Ground			16	CN633	2nd Tray ·3rd Tray Set Sensor/ Paper Size Sensor
			18	2nd Tray Set Sensor	INPUT	Set	Not Set	15		
			19	GND	Ground			14		
			20	2nd Tray Size Sensor5	INPUT	Set	Not Set	13		
			21	2nd Tray Size Sensor4	INPUT	Set	Not Set	12		
			22	2nd Tray Size Sensor3	INPUT	Set	Not Set	11		
			23	2nd Tray Size Sensor2	INPUT	Set	Not Set	10		
			24	2nd Tray Size Sensor1	INPUT	Set	Not Set	9		
			25	GND	Ground			8		
			26	3rd Tray Set Sensor	INPUT	Set	Not Set	7		
			27	GND	Ground			6		
			28	3rd Tray Size Sensor5	INPUT	Set	Not Set	5		
			29	3rd Tray Size Sensor4	INPUT	Set	Not Set	4		
			30	3rd Tray Size Sensor3	INPUT	Set	Not Set	3		
			31	3rd Tray Size Sensor2	INPUT	Set	Not Set	2		
			32	3rd Tray Size Sensor1	INPUT	Set	Not Set	1		
	RYB	CN314	1	NC				11	CN632	NC
			2	Toner Bottle Motor - Left	OUTPUT	ON	OFF	10		Toner Bottle Motor - Left
			3	+24V	Power			9		
			4	Toner Bottle Chuck O/C Sensor - Left:GND	Ground			8		Toner Bottle Chuck O/C Sensor - Left
			5	Toner Bottle Chuck O/C Sensor - Left: Output	INPUT	Close	Open	7		
			6	Toner Bottle Chuck O/C Sensor - Left:5V	Power			6		
			7	Toner Bottle Sensor - Left:GND	Ground			5		Toner Bottle Sensor - Left
			8	Toner Bottle Sensor - Left: Output	INPUT	Detect	Not Detect	4		
			9	Toner Bottle Sensor - Left:5V	Power			3		
			10	Bottle Inner Cap Motors - Left:H Bridge (Regular)	OUTPUT			2		Bottle Inner Cap Motors -
			11	Bottle Inner Cap Motors - Left:H Bridge (Reverse)	OUTPUT			1		
			12	Toner Bottle Motor - Right	OUTPUT	ON	OFF	22		Toner Bottle Motor - Right
			13	+24V	Power			21		
			14	Toner Bottle Chuck O/C Sensor - Right:GND	Ground			20		Toner Bottle Chuck O/C Sensor - Right
			15	Toner Bottle Chuck O/C Sensor - Right: Output	INPUT	Close	Open	19		
			16	Toner Bottle Chuck O/C Sensor - Right:5V	Power			18		

138	RYB: Relay	CN725	1	+24V(Reservation)				13	CN711	(1st Tray Reverse Solenoid)
			2	1st Tray Reverse Solenoid(Reservation)				12		
	CN725		3	+24V				11		1st Tray Pickup Solenoids
			4	1st Tray Pickup Solenoids				10		
			5	GND				9		1st Tray Paper Upper Limit Sensors
			6	1st Tray Paper Upper Limit Sensors				8		
			7	+5V				7		
			8	GND				6		1st Tray Paper End Sensor
			9	1st Tray Paper End Sensor				5		
			10	+5V				4		
			11	GND				3		1st Tray Feed Sensors
			12	1st Tray Feed Sensors				2		
			13	+5V				1		
			14	+24V(Reservation)				13	CN712	(2nd Tray Reverse Solenoid)
			15	2nd Tray Reverse Solenoid(Reservation)				12		
			16	+24V				11		2nd Tray Pickup Solenoids
			17	2nd Tray Pickup Solenoids				10		
			18	GND				9		2nd Tray Paper Upper Limit Sensors
			19	2nd Tray Paper Upper Limit Sensors				8		
			20	+5V				7		
			21	GND				6		2nd Tray Paper End Sensor
			22	2nd Tray Paper End Sensor				5		
			23	+5V				4		
			24	GND				3		2nd Tray Feed Sensors
			25	2nd Tray Feed Sensors				2		
			26	+5V				1		
	RYB: Relay	CN726	1	NC				13	CN713	NC
			2	NC				12		
	CN726		3	+24V				11		3rd Tray Pickup Solenoids
			4	3rd Tray Pickup Solenoids				10		
			5	GND				9		3rd Tray Paper Upper Limit Sensors
			6	3rd Tray Paper Upper Limit Sensors				8		
			7	+5V				7		
			8	GND				6		3rd Tray Paper End Sensor
			9	3rd Tray Paper End Sensor				5		
			10	+5V				4		
			11	GND				3		3rd Tray Feed Sensors
			12	3rd Tray Feed Sensors				2		
			13	+5V				1		
139	RYB: Relay	CN711	1	NC				-	-	NC
			2	NC				-		
	CN711,CN712,CN713		3	+24V				2	CN793	3rd Tray Pickup Solenoids
			4	Pickup Solenoids				1		
			5	GND				3	CN792	3rd Tray Paper Upper Limit Sensors
			6	Paper Upper Limit Sensors				2		
			7	+5V				1		
			8	GND				3	CN791	3rd Tray Paper End Sensor
			9	Paper End Sensor				2		
			10	+5V				1		
			11	GND				3	CN790	3rd Tray Feed Sensors
			12	Feed Sensors				2		
			13	+5V				1		
140	RYB	CN308	A12	Paper Transport Motor - Tray 1 Output-B Phase	OUTPUT			1	CN657	Paper Transport Motor -
			A11	+24VS	Power			2		
			A10	Paper Transport Motor - Tray 1 Output B Phase	OUTPUT			3		
			A9	Paper Transport Motor - Tray 1 Output-A Phase	OUTPUT			4		
			A8	+24VS	Power			5		
			A7	Paper Transport Motor - Tray 1 Output A Phase	OUTPUT			6		
			A6	Paper Feed Motor - Tray 1 Output-B Phase	OUTPUT			1	CN656	Paper Feed Motor - Tray 1
			A5	+24VS	Power			2		
			A4	Paper Feed Motor - Tray 1 Output B Phase	OUTPUT			3		
			A3	Paper Feed Motor - Tray 1 Output-A Phase	OUTPUT			4		
			A2	+24VS	Power			5		
			A1	Paper Feed Motor - Tray 1 Output A Phase	OUTPUT			6		
			B12	Paper Feed Motor - Tray 2 Output-B Phase	OUTPUT			1	CN658	2nd Tray Paper Feed ST
			B11	+24VS	Power			2		
			B10	Paper Feed Motor - Tray 2 Output B Phase	OUTPUT			3		
			B9	Paper Feed Motor - Tray 2 Output-A Phase	OUTPUT			4		
			B8	+24VS	Power			5		
			B7	Paper Feed Motor - Tray 2 Output A Phase	OUTPUT			6		
			B6	Paper Transport Motor - Tray 2 Output-B Phase	OUTPUT			1	CN659	Paper Transport Motor -
			B5	+24VS	Power			2		
			B4	Paper Transport Motor - Tray 2 Output B Phase	OUTPUT			3		
			B3	Paper Transport Motor - Tray 2 Output-A Phase	OUTPUT			4		
			B2	+24VS	Power			5		
			B1	Paper Transport Motor - Tray 2 Output A Phase	OUTPUT			6		
		CN309	A13	NC				-	-	NC
			A12	Paper Feed Motor - Tray 3 Output-B Phase	OUTPUT			1	CN652	Paper Feed Motor - Tray 3
			A11	+24VS	Power			2		
			A10	Paper Feed Motor - Tray 3 Output B Phase	OUTPUT			3		
			A9	Paper Feed Motor - Tray 3 Output-A Phase	OUTPUT			4		
			A8	+24VS	Power			5		
			A7	Paper Feed Motor - Tray 3 Output A Phase	OUTPUT			6		
			A6	Paper Transport Motor - Tray 3 Output-B Phase	OUTPUT			1	CN653	Paper Transport Motor -
			A5	+24VS	Power			2		
			A4	Paper Transport Motor - Tray 3 Output B Phase	OUTPUT			3		
			A3	Paper Transport Motor - Tray 3 Output-A Phase	OUTPUT			4		
			A2	+24VS	Power			5		
			A1	Paper Transport Motor - Tray 3 Output A Phase	OUTPUT			6		
			B13	NC				-	-	NC
			B12	Bank Exit Motor Output-B Phase	OUTPUT			1	CN654	Bank Exit Motor
			B11	+24VS	Power			2		
			B10	Bank Exit Motor Output B Phase	OUTPUT			3		
			B9	Bank Exit Motor Output-A Phase	OUTPUT			4		
			B8	+24VS	Power			5		
			B7	Bank Exit Motor Output A Phase	OUTPUT			6		
			B6	Vertical Transport Motor Output-B Phase	OUTPUT			1	CN655	Vertical Transport Motor
			B5	+24VS	Power			2		
			B4	Vertical Transport Motor Output B Phase	OUTPUT			3		
			B3	Vertical Transport Motor Output-A	OUTPUT			4		
			B2	+24VS	Power			5		
			B1	Vertical Transport Motor Output A Phase	OUTPUT			6		

harness No	Connector (FROM) To Connector	No	Pin No	Signal Information: Signal Name	Direction	L	H	Connector (TO) No	Pin No	To Connector
24	Sensor: Relay	CN51	1	Sensor:GND				3	CN61	Sensor
			2	Sensor				2		
	CN601,CN602,CN603,CN604		3	Sensor: 5V				1		
136	RYB: Relay	CN630	1	1st Tray LED1 Anode				2	CN622	1st Tray LED1
			2	1st Tray LED1 Cathode				1		
	CN630		3	1st Tray LED2 Anode				2	CN623	1st Tray LED2
			4	1st Tray LED2 Cathode				1		
			5	2nd Tray LED1 Anode				2	CN624	2nd Tray LED1
			6	2nd Tray LED1 Cathode				1		
			7	2nd Tray LED2 Anode				2	CN625	2nd Tray LED2
			8	2nd Tray LED2 Cathode				1		
			9	3rd Tray LED1 Anode				2	CN626	3rd Tray LED1
			10	3rd Tray LED1 Cathode				1		

harness No	Connector (FROM) To Connector	No	Pin No	Signal Information: Signal Name	Direction	L	H	Connector (TO) No	Pin No	To Connector
152	NC	-	-	NC				3		
			-	NC				2		
			-	NC				1		
	TDRB	CN252	1	Belt Centering Sensor:B	OUTPUT			17	CN757	IOB
			2	Belt Centering Sensor:A	OUTPUT			16		
			3	Belt Centering Sensor:LED	INPUT			15		
			4	Transfer Belt Drive Motor:CW/CCW	INPUT	CCW	CW	14		
			5	Transfer Belt Drive Motor:Gain Change	INPUT	Number of revolution sc,x	Number of revolution sa,b	13		
			6	Transfer Belt Drive Motor:CLOCK	INPUT			12		
			7	Transfer Belt Drive Motor:LOCK	OUTPUT	ON (Rated)	OFF	11		
			8	Transfer Belt Drive Motor:START/STOP	INPUT	ON	OFF	10		
			9	Belt Centering Motor :CLOCK	INPUT			9		
			10	Belt Centering Motor :ENABLE	INPUT	Normal	Sleep	8		

			11	3rd Tray LED2 Anode				2	CN627	3rd Tray LED2
			12	3rd Tray LED2 Cathode				1		
	IOB: Relay	CN1086	1	Total Counter:24V				2	CN633	Total Counter
	CN1086		2	Total Counter:TRG				1		
144	RYB: Relay	CN714	1	GND				3	CN602	Vertical Transport Sensor
			2	Vertical Transport Sensor				2		
	CN713		3	+5V				1		
			4	GND				3	CN601	1st Tray Transport Sensor
			5	1st Tray Transport Sensor				2		
			6	+5V				1		
			7	GND				3	CN603	2nd Tray Transport Sensor
			8	2nd Tray Transport Sensor				2		
			9	+5V				1		
			10	GND				3	CN604	3rd Tray Transport Sensor
			11	3rd Tray Transport Sensor				2		
			12	+5V				1		
145	RYB: Relay	CN633	1	GND				8	CN634	2nd Tray Set Sensor/ Paper Size Sensor
			2	2nd Tray Set Sensor				7		
	CN633		3	GND				6		
			4	2nd Tray Size Sensor5				5		
			5	2nd Tray Size Sensor4				4		
			6	2nd Tray Size Sensor3				3		
			7	2nd Tray Size Sensor2				2		
			8	2nd Tray Size Sensor1				1		
			9	GND				8	CN635	3rd Tray Set Sensor/ Paper Size Sensor
			10	3rd Tray Set Sensor				7		
			11	GND				6		
			12	3rd Tray Size Sensor5				5		
			13	3rd Tray Size Sensor4				4		
			14	3rd Tray Size Sensor3				3		
			15	3rd Tray Size Sensor2				2		
			16	3rd Tray Size Sensor1				1		
	RYB: Relay	CN616	1	Tandem Tray - Left Lock Solenoid				2	CN636	Tandem Tray - Left Lock Solenoid
	CN616		2	+24V				1		
146	Purged Paper Sensor	CN875	1	Purged Paper Sensor Power				3	CN876	RYB
			2	Purged Paper Sensor Output				2		
			3	Purged Paper Sensor GND				1		
147	RYB	CN330	4	Toner Cover Switch(24VTN)	Power			2	T185	Toner Cover Switch
			3	Toner Cover Switch(24V2)	Power			1		
			2	Interlock Switches(5VS)	Power			2	T181	Interlock Switches -
			1	Interlock Switches(5VL)	Power			2	T200	Interlock Switches(Front) -
	Interlock Switches(Front) - Left	T200	1	Interlock Switches(5VS)	Power			1	T201	Interlock Switches(Front) - Right
	Interlock Switches(Front) - Right	T201	2	Interlock Switches(5VS)	Power			2	T145	Interlock Switches - Left(Out)
	Interlock Switches - Left(Out)	T145	1	Interlock Switches(5VS)	Power			1	T146	Interlock Switches - Left(Center)
	Interlock Switches - Left(Center)	T146	2	Interlock Switches(5VS)	Power			2	T180	Interlock Switches - Right(Center)
	Interlock Switches - Right(Center)	T180	1	Interlock Switches(5VS)	Power			1	T181	Interlock Switches - Right(Out)
149	IOB: Relay	CN892	1	PSU_FANL_+24V				3	CN891	PSU Cooling FAN - Left
			2	PSU_FANL_Lock Sensor				2		
	CN882		3	PSU_FANL_Drive				1		
			4	PSU_FANR_+24V				3	CN890	PSU Cooling FAN - Right
			5	PSU_FANR_Lock Sensor				2		
			6	PSU_FANR_Drive				1		
151	Power PackT1/T2	CN155	1	NC				11	CN752	IOB
			2	NC				10		
			3	+24VS	Power			9		
			4	GND	Ground			8		
			5	PWM:T1	OUTPUT			7		
			6	SC:T1	INPUT			6		
			7	AD:T1	INPUT			5		
			8	PWM:T2(-)	OUTPUT			4		
			9	SC:T2(-)	INPUT			3		
			10	AD:T2(-)	INPUT			2		
			11	PWM:T2(+)	OUTPUT			1		
	ACPCB	CN750	1	NC				-	-	NC
	D1795230A		2	AC-L				1	CN601	ITB Heater
	Thermostats	T1	1	AC-N				2		
	ACPCB CN750	CN750	3	AC-N				1	T2	Thermostats
	NC	-	4	NC				-	-	NC
			5	NC				-		
			6	NC				-		
152	TDRB	CN251	1	+24VS	Power			1	CN755	RYB
			2	GND	Ground			2		
			3	+5V	Power			3		
	NC	-	-	NC				4		
			-	NC				5		
			-	NC				6		
			-	NC				19	CN756	IOB
			-	NC				18		
			-	NC				17		
			-	NC				16		
			-	NC				15		
	TDRB	CN250	1	ID Sensor:+3.3V	Power			14		
			2	ID Sensor:GND	Ground			13		
			3	ID Sensor:LEDON	INPUT			12		
			4	ID Sensor:FB Signal(Reflection)	OUTPUT			11		
			5	Unit Set Sensor	OUTPUT	Set	Not Set	10		
			6	Motor Driver Reset	INPUT	OFF	ON	9		
			7	ID Sensor FAN	INPUT	ON	OFF	8		
			8	Belt Cleaning Reset Sensor: Output	OUTPUT	Set	Not Set	7		
			9	Belt Centering Roller HP Sensor	OUTPUT	Not HP	HP	6		
			10	PTR Separation Sensor	OUTPUT	PTR contact	PTR alienation	5		
			11	ID Sensor FAN:Lock	OUTPUT	ON	OFF	4		

harness No	Connector (FROM) To Connector	No	Pin No	Signal Information Signal Name	Direction	L	H	Connector (TO) No	Pin No	To Connector
164	DRB: Relay	CN823	1	LCTRelay Sensor:GND				3	CN867	LCTRelay Sensor
			2	LCTRelay Sensor:Vout				2		
	CN823		3	LCTRelay Sensor:+5V				1		
166	RYB: Relay	CN760	1	Exit Motor:GND				2	CN920	Exit Motor
	CN760		2	Exit Motor:24VS				1		
	EDRB: Relay	CN761	1	Set Sensor				2	CN761	Set Sensor
			3	Exit sensor:GND				6	CN906	Exit sensor
	CN763		4	Exit sensor				5		
			5	Exit sensor:5V				4		
			6	Exit Junction Gate Sensor :GND				3		Exit Junction Gate Sensor
			7	Exit Junction Gate Sensor				2		
			8	Exit Junction Gate Sensor :5V				1		
			9	Purge Relay Sensor:GND				3	CN907	Purge Relay Sensor
			10	Purge Relay Sensor				2		
			11	Purge Relay Sensor:5V				1		
			12	Invert Junction Gate Solenoid:ON				2	CN923	Invert Junction Gate
			13	Invert Junction Gate Solenoid:24VS				1		
			14	Exit Junction Gate Motor :A Phase				6	CN924	Exit Junction Gate Motor
			15	Exit Junction Gate Motor :24VS				5		
			16	Exit Junction Gate Motor :-A Phase				4		
			17	Exit Junction Gate Motor :B Phase				3		
			18	Exit Junction Gate Motor :24VS				2		
			19	Exit Junction Gate Motor :-B Phase				1		
			20	NC				-	-	NC

			11	Belt Centering Motor :CW/CCW	INPUT	CW	CCW	7		
			12	Belt Centering Motor :Current switching	INPUT	ON	OFF	6		
			13	Motor :Error	OUTPUT	Trouble	Normal	5		
			14	PTR Separation Motor:CLOCK	INPUT			4		
			15	PTR Separation Motor:ENABLE	INPUT	Normal	Sleep	3		
			16	PTR Separation Motor:CW/CCW	INPUT	CW	CCW	2		
			17	PTR Separation Motor:Current switching	INPUT	ON	OFF	1		
153	TDRB: Relay	CN940	1	CW/CCW				11	CN950	Transfer Belt Drive Motor
			2	(GND(5V))				10		
	CN940		3	(+5V)				9		
			4	Gain Change				8		
			5	CLOOK				7		
			6	LOCK				6		
			7	START/STOP				5		
			8	GND(24V)				4		
			9	GND(24V)				3		
			10	+24VS				2		
			11	+24VS				1		
154	TDRB	CN253	1	CW/CCW	OUTPUT	CCW	CW	11	CN940	Transfer Belt Drive Motor
			2	NC				10		
			3	NC				9		
			4	Gain Change	OUTPUT	Number of revolution sc,x	Number of revolution sa,b	8		
			5	CLOOK	OUTPUT			7		
			6	LOCK	INPUT	ON (Rated)	OFF	6		
			7	START/STOP	OUTPUT	ON	OFF	5		
			8	GND(24V)	Ground			4		
			9	GND(24V)	Ground			3		
			10	+24VS	Power			2		
			11	+24VS	Power			1		
155	TDRB	CN254	1	COM	Power			6	CN959	ITB Roller Separation Motor
			2	A Phase	OUTPUT			5		
			3	/A Phase	OUTPUT			4		
			4	COM	Power			3		
			5	B Phase	OUTPUT			2		
			6	/B Phase	OUTPUT			1		
			7	NC				-	-	NC
156	TDRB: Relay	CN945	1	ID Sensor:+3.3V				5	CN965	ID Sensor
			2	ID Sensor:GNDP				4		
	CN945		3	ID Sensor:LEDON				3		
			4	ID Sensor:FB Signal(Diffused Reflection)				2		
			5	ID Sensor:FB Signal(Reflection)				1		
157	TDRB	CN256	1	ID SensorFAN:24V	Power			3	CN948	ID Sensor FAN
			2	ID SensorFAN:Lock	INPUT	ON	OFF	2		
			3	ID Sensor FAN:GND	Ground			1		
			4	ID Sensor:+3.3V	Power			5	CN945	ID Sensor
			5	ID Sensor:GNDP	Ground			4		
			6	ID Sensor:LEDON	OUTPUT			3		
			7	ID Sensor:FB Signal(Diffused Reflection)	INPUT			2		
			8	ID Sensor:FB Signal(Reflection)	INPUT			1		
			9	Belt Centering Sensor:GND	Ground			5	CN967	Belt Centering Sensor
			10	Belt Centering Sensor:B	INPUT			4		
			11	Belt Centering Sensor:A	INPUT			3		
			12	Belt Centering Sensor:+5V	Power			2		
			13	Belt Centering Sensor:LED	OUTPUT			1		
158	TDRB	CN257	1	PTR Separation Sensor:GND	Ground			3	CN947	PTR Separation Sensor
			2	PTR Separation Sensor	INPUT	PTR contact	PTR alienation	2		
			3	PTR Separation Sensor:+5V	Power			1		
			4	Belt Centering Roller HP Sensor:GND	Ground			5	CN946	Belt Centering Roller HP Sensor
			5	Belt Centering Roller HP Sensor	INPUT	Not HP	HP	4		
			6	Belt Centering Roller HP Sensor:5V	Power			3		
			7	Belt Cleaning Reset Sensor:GND	Ground			2		Belt Cleaning Reset Sensor
			8	Belt Cleaning Reset Sensor: Output	INPUT	Set	Not Set	1		
159	TDRB: Relay	CN947	1	PTR Separation Sensor:GND				3	CN964	PTR Separation Sensor
			2	PTR Separation Sensor				2		
	CN947		3	PTR Separation Sensor:+5V				1		
160	TDRB: Relay	CN948	1	ID Sensor FAN:24V				3	CN958	ID Sensor FAN
			2	ID Sensor FAN:Lock				2		
	CN948		3	ID Sensor FAN:GND				1		
161	TDRB: Relay	CN946	1	Belt Centering Roller HP Sensor:GND				3	CN963	Belt Centering Roller HP Sensor
			2	Belt Centering Roller HP Sensor				2		
	CN946		3	Belt Centering Roller HP Sensor:5V				1		
			4	Belt Cleaning Reset Sensor:GND				2	CN962	Belt Cleaning Reset Sensor
			5	Belt Cleaning Reset Sensor: Output				1		
162	DRB	CN277	1	Separation Power Pack:24V	Power			5	CN152	Separation Power Pack
			2	Separation Power Pack:GND	Ground			4		
			3	Separation Power Pack:AC_PWM	OUTPUT			3		
			4	Separation Power Pack:DC_PWM	OUTPUT			2		
			5	Separation Power Pack:SC	INPUT	Normal	Trouble	1		
163	DRB	CN276	1	Registration Shift HP Sensor:GND	Ground			3	CN849	Registration Shift HP Sensor
			2	Registration Shift HP Sensor:Vout	INPUT	Detect	Not Detect	2		
			3	Registration Shift HP Sensor:+5V	Power			1		
			4	Rotary gate HP Sensor:GND	Ground			6	CN829	Rotary gate HP Sensor
			5	Rotary gate HP Sensor:Vout	INPUT	Detect	Not Detect	5		
			6	Rotary gate HP Sensor:+5V	Power			4		
			7	Transfer Timing Sensor:GND	Ground			3		Transfer Timing Sensor
			8	Transfer Timing Sensor:Vout	INPUT	Detect	Not Detect	2		
			9	Transfer Timing Sensor:+5V	Power			1		
			10	PTB Sensor:GND	Ground			3	CN852	PTB Sensor
			11	PTB Sensor:Vout	INPUT	Detect	Not Detect	2		
			12	PTB Sensor:+5V	Power			1		

harness No	Connector (FROM) To Connector	No	Pin No	Signal Information Signal Name	Direction	L	H	Connector (TO) No	Pin No	To Connector
173	EDRB: Relay	CN907	1	Purge Relay Sensor:GND				3	CN918	Purge Relay Sensor
			2	Purge Relay Sensor				2		
	CN907		3	Purge Relay Sensor:5V				1		
174	EDRB: Relay	CN10	1	Sensor:GND				3	CN20	Sensor
			2	Sensor				2		
	CN912,CN917		3	Sensor:5V				1		
			4	NC				-	-	NC
175	EDRB,DRB: Relay	CN11	1	Sensor:GND				3	CN21	Sensor
			2	Sensor				2		
			3	Sensor:5V				1		
176	EDRB: Relay	CN955	1	Exit Invert Sensor:GND				3	CN956	Exit Invert Sensor
			2	Exit Invert Sensor:Vout				2		
	CN915		3	Exit Invert Sensor:+5V				1		
177	DRB: Relay	CN855	1	PTB Sensor:GND				3	CN858	PTB Sensor
			2	PTB Sensor:Vout				2		
	CN855		3	PTB Sensor:+5V				1		
178	DRB: Relay	CN15	1	Sensor:GND				3	CN25	Sensor
	CN846		2	Sensor				2		
	CN851		3	Sensor:5V				1		
179	DRB	CN278	A1	NC				-	-	NC
			A2	NC				-		
			A3	NC				-		
			A4	Paper Transport Fan - Front:+24VS	Power			6	CN825	Paper Transport Fan - Front
			A5	Paper Transport Fan - Front:Lock	INPUT	Normal	OFF	5		

harness No	Connector (FROM) To Connector	No	Pin No	Signal Information Signal Name	Direction	L	H	Connector (TO) No	Pin No	To Connector
	EDRB: Relay CN764	CN762	1	NC				-	-	NC
			2	NC				-		
			3	NC				-		
			4	NC				-		
			5	NC				-		
			6	NC				-		
			7	NC				-		
			8	Duplex Lower Cooling Fan - Front:24V				6	CN944	Duplex Lower Cooling Fan - Front
			9	Duplex Lower Cooling Fan - Front:LOCK				5		
			10	Duplex Lower Cooling Fan - Front:GND				4		
			11	Duplex Lower Cooling Fan - Rear:24V				3		Duplex Lower Cooling Fan - Rear
			12	Duplex Lower Cooling Fan - Rear:LOCK				2		
			13	Duplex Lower Cooling Fan - Rear:GND				1		
			14	Exit Motor:CLK				3	CN921	Exit Motor
			15	Exit Motor:LOCK				2		
			16	Exit Motor:S/S				1		
			17	Duplex Invert Sensor:GND				3	CN905	Duplex Invert Sensor
			18	Duplex Invert Sensor				2		
			19	Duplex Invert Sensor:5V				1		
167	EDRB: Relay CN765	CN765	1	NC				-	-	NC
			2	NC				-		
			3	NC				-		
			4	Inverter Entrance Motor:A Phase				6	CN925	Inverter Entrance Motor
			5	Inverter Entrance Motor:24VS				5		
			6	Inverter Entrance Motor:-A Phase				4		
			7	Inverter Entrance Motor:B Phase				3		
			8	Inverter Entrance Motor:24VS				2		
			9	Inverter Entrance Motor:-B Phase				1		
			10	Duplex Transport Motor1:A Phase				6	CN928	Duplex Transport Motor1
			11	Duplex Transport Motor1:24VS				5		
			12	Duplex Transport Motor1:-A Phase				4		
			13	Duplex Transport Motor1:B Phase				3		
			14	Duplex Transport Motor1:24VS				2		
			15	Duplex Transport Motor1:-B Phase				1		
			16	NC				-	-	NC
			17	NC				-		
			18	NC				-		
			19	NC				-		
			20	Exit Invert Junction Gate Motor:A Phase				6	CN927	Exit Invert Junction Gate
			21	Exit Invert Junction Gate Motor:24VS				5		
			22	Exit Invert Junction Gate Motor:-A Phase				4		
			23	Exit Invert Junction Gate Motor:B Phase				3		
			24	Exit Invert Junction Gate Motor:24VS				2		
			25	Exit Invert Junction Gate Motor:-B Phase				1		
			26	Exit Invert Junction Gate Motor:A Phase				6	CN926	Exit Invert Junction Gate
			27	Exit Invert Junction Gate Motor:24VS				5		
			28	Exit Invert Junction Gate Motor:-A Phase				4		
			29	Exit Invert Junction Gate Motor:B Phase				3		
			30	Exit Invert Junction Gate Motor:24VS				2		
			31	Exit Invert Junction Gate Motor:-B Phase				1		
			32	NC				-	-	NC
168	EDRB: Relay CN769	CN767	1	Duplex Transport Sensor2:GND				3	CN902	Duplex Transport Sensor2
			2	Duplex Transport Sensor2				2		
			3	Duplex Transport Sensor2:5V				1		
			4	Duplex Transport Sensor3:GND				3	CN903	Duplex Transport Sensor3
			5	Duplex Transport Sensor3				2		
			6	Duplex Transport Sensor3:5V				1		
			7	NC				-	-	NC
			8	NC				-		
			9	NC				-		
			10	NC				-		
			11	NC				-		
			12	NC				-		
			13	NC				-		
	EDRB: Relay CN770	CN768	1	Exit JG HP Sensor:GND				4	CN917	Exit JG HP Sensor
			2	Exit JG HP Sensor				3		
			3	Exit JG HP Sensor:5V				2		
	NC	-	-	NC				1		
	EDRB: Relay CN770	CN768	4	Duplex Transport Sensor1:GND				3	CN901	Duplex Transport Sensor1
			5	Duplex Transport Sensor1				2		
			6	Duplex Transport Sensor1:5V				1		
			7	Exit Invert Sensor:GND				3	CN915	Exit Invert Sensor
			8	Exit Invert Sensor				2		
			9	Exit Invert Sensor:5V				1		
			10	Exit Invert Junction Gate HP Sensor:GND				4	CN912	Exit Invert Junction Gate HP Sensor
			11	Exit Invert Junction Gate HP Sensor				3		
			12	Exit Invert Junction Gate HP Sensor:5V				2		
	NC	-	-	NC				1		
140	EDRB: Relay CN905	CN30	1	Duplex Invert Sensor:GND				3	CN40	Duplex Invert Sensor
			2	Duplex Invert Sensor				2		
			3	Duplex Invert Sensor:5V				1		
172	EDRB: Relay CN906	CN906	1	Exit sensor:GND				3	CN916	Exit sensor
			2	Exit sensor				2		
			3	Exit sensor:5V				1		
			4	Exit Junction Gate Sensor :GND				3	CN919	Exit Junction Gate Sensor
			5	Exit Junction Gate Sensor				2		
			6	Exit Junction Gate Sensor :5V				1		

harness No	Connector (FROM) To Connector	No	Pin No	Signal Information Signal Name	Direction	L	H	Connector (TO) No	Pin No	To Connector
			10	NC				-		
			11	NC				-		
			12	NC				-		
			13	NC				-		
			14	NC				-		
			15	NC				-		
			16	NC				-		
			17	NC				-		
189	Pressure Roller Fusing Lamp Terminals Stand	T161	1	Pressure Roller Fusing Lamp L				1	T162	Thermostats
183	IOB: Relay CN747	CN747	1	GND				3	CN730	Fusing Winding Sensor
			2	Fusing Winding Sensor				2		
			3	+5V				1		
			4	NC				-	-	NC
			5	NC				-		
			6	NC				-		
			7	NC				-		
			8	NC				-		
			9	NC				-		
			10	NC				-		
			11	NC				-		
			12	NC				-		
			13	NC				-		
			14	Set Sensor(NA)				17	CN747	IOB
			15	NC				-	-	NC
			16	NC				-		
136	IOB: Relay CN725	CN725	1	Fusing Cleaning Web Motor(DC):Black				2	CN722	Fusing Cleaning Web Motor
			2	Fusing Cleaning Web Motor(DC):Red				1		
			3	GND				3	CN736	Fusing Cleaning Web End Sensor
			4	Fusing Cleaning Web End Sensor				2		
			A6	Paper Transport Fan - Front:GND	OUTPUT	ON	Stop	4		
			A7	Paper Transport Fan - Rear:+24VS	Power			3		Paper Transport Fan - Rear
			A8	Paper Transport Fan - Rear:Lock	INPUT	Normal	OFF	2		
			A9	Paper Transport Fan - Rear:GND	OUTPUT	ON	Stop	1		
			B1	PTR Cooling Fan - Front:+24VS	Power			3	CN873	PTR Cooling Fan - Front
			B2	PTR Cooling Fan - Front:Lock	INPUT	Normal	OFF	2		
			B3	PTR Cooling Fan - Front:GND	OUTPUT	ON	Stop	1		
			B4	PTR Cooling Fan - Rear:+24VS	Power			3	CN874	PTR Cooling Fan - Rear
			B5	PTR Cooling Fan - Rear:Lock	INPUT	Normal	OFF	2		
			B6	PTR Cooling Fan - Rear:GND	OUTPUT	ON	Stop	1		
			B7	PTR Cooling Fan:+24VS	Power			3	CN841	PTR Cooling Fan
			B8	PTR Cooling Fan:Lock	INPUT	Normal	OFF	2		
			B9	PTR Cooling Fan:GND	OUTPUT	ON	Stop	1		
180	Earth	T50	1	GND	Ground			1	T51	Earth
181	AC PCB: Relay CN1097	CN1090	1	Heating Roller Lamps 1N(Heating Roller CenterA)				1	T1091	Heating Roller Lamps 1N
			2	Heating Roller Lamps 2N(Heating Roller End Spread SizeA)				1	T1092	Heating Roller Lamps 2N
			3	Heating Roller Lamps 1,2L				1	T1096	Heating Roller Lamps 1,2L
			4	Heating Roller Lamps 3,4L				1	T1097	Heating Roller Lamps 3,4L
			5	Heating Roller Lamps 3N(Heating Roller CenterB)				1	T1093	Heating Roller Lamps 3N
			6	Heating Roller Lamps 4N(Heating Roller EndB)				1	T1094	Heating Roller Lamps 4N
182	IOB: Relay CN1097	CN746	1	NC				-	-	NC
			2	NC				-		
			3	NC				-		
			4	NC				-		
			5	NC				-		
			6	NC				-		
			7	NC				-		
			8	NC				-		
			9	NC Temperature Sensor (Heating Roller Center) :Compensation				1	NC_SNS4	NC Temperature Sensor (Heating Roller Center)
			10	NC Temperature Sensor (Heating Roller Center) : Sensor				2		
			11	NC Temperature Sensor (Heating Roller Center) :GND				3		
			12	NC Temperature Sensor (Heating Roller End) :Compensation				1	NC_SNS5	NC Temperature Sensor (Heating Roller End)
			13	NC Temperature Sensor (Heating Roller End) : Sensor				2		
			14	NC Temperature Sensor (Heating Roller End) :GND				3		
			15	Hot Roller NC Sensor:Compensation				1	NC_SNS6	Hot Roller NC Sensor
			16	Hot Roller NC Sensor:Detection				2		
			17	Hot Roller NC Sensor:GND				3		
			18	Heating Roller Thermistor (Rear)				2	TH1	Heating Roller Thermistor (Rear)
			19	Heating Roller Thermistor (Rear):GND				1		
183	IOB: Relay CN1097	CN747	1	GND				3	CN730	Fusing Winding Sensor
			2	Fusing Winding Sensor				2		
			3	+5V				1		
			4	NC				-	-	NC
			5	NC				-		
			6	NC				-		
			7	NC				-		
			8	NC				-		
			9	NC				-		
			10	NC				-		
			11	NC				-		
			12	NC				-		
			13	NC				-		
			14	NC				-		
			15	NC				-		
			16	Set Sensor(DOM)				17	CN747	IOB
184	FG	CN1095	1	FG	Ground			1	T118	FG
	NC		2	NC				-	-	NC
			3	NC				-		
	AC PCB: Relay CN1065		4	Pressure Roller Fusing Lamp 5N				1	T1098	Pressure Roller Fusing Lamp 5N
			5	Pressure Roller Fusing Lamp 5L				1	T1099	Pressure Roller Fusing Lamp 5L
	NC		6	NC				-	-	NC
185	IOB: Relay CN748	CN748	1	Fusing Cleaning Web Motor(DC):Black				5	CN725	Fusing Cleaning Web Motor
			2	Fusing Cleaning Web Motor(DC):Red				4		
			3	GND				3		Fusing Cleaning Web End Sensor
			4	Fusing Cleaning Web End Sensor				2		
			5	+5V				1		
			6	GND				3	CN732	Pressure Roller Cam HP Sensor A
			7	Pressure Roller Cam HP Sensor A				2		
			8	+5V				1		
			9	GND				3	CN733	Pressure Roller Cam HP Sensor B
			10	Pressure Roller Cam HP Sensor B				2		
			11	+5V				1		
			12	GND				3	CN734	Fusing Unit Paper Sensor
			13	Fusing Unit Paper Sensor				2		
			14	+5V				1		
			15	GND				3	CN735	Fusing Exit Sensor (Center)
			16	Fusing Exit Sensor (Center)				2		
			17	+5V				1		
			18	Set Sensor				19	CN748	IOB
82	IOB: Relay CN749	CN749	1	Pressure Roller NC Sensor:Compensation				1	NC_SNS7	Pressure Roller NC Sensor
			2	Pressure Roller NC Sensor: Sensor				2		
			3	Pressure Roller NC Sensor:GND				3		
			4	Thermistor Pressure				2	TH2	Thermistor Pressure
			5	Thermistor Pressure:GND				1		
			6	NC				-	-	NC
			7	NC				-		
			8	NC				-		
			9	NC				-		

harness No	Connector (FROM) To Connector	No	Pin No	Signal Information Signal Name	Direction	L	H	Connector (TO) No	Pin No	To Connector
41	CTL	CN1	1	-				50	CN2	CTL
			2	-				49		
			3	-				48		
			4	-				47		
			5	-				46		
			6	-				45		
			7	-				44		
			8	-				43		
			9	-				42		
			10	-				41		
			11	-				40		
			12	-				39		
			13	-				38		
			14	-				37		
			15	-				36		
			16	-				35		
			17	-				34		
			18	-				33		
			19	-				32		
			20	-				31		
			21	-				30		
			22	-				29		
			23	-				28		
			24	-				27		
			25	-				26		
			26	-				25		
			27	-				24		
			28	-				23		
			29	-				22		

			5	+5V				1		
183	IOB: Relay	CN747	1	GND				3	CN730	Fusing Winding Sensor
			2	Fusing Winding Sensor				2		
	CN747		3	+5V				1		
			4	NC				-	-	NC
			5	NC				-		
			6	NC				-		
			7	NC				-		
			8	NC				-		
			9	NC				-		
			10	NC				-		
			11	NC				-		
			12	NC				-		
			13	NC				-		
			14	NC				-		
			15	Set Sensor(EU)				17	CN747	IOB
			16	NC				-	-	NC
192	IOB: Relay	CN730	1	GND				3	CN738	Fusing Winding Sensor
			2	Fusing Winding Sensor				2		
	CN730		3	+5V				1		
195	Power PackT1/T2	T156	1	T1 Output				1	T133	T1
196	Power PackT1/T2	T157	1	T2 Output				1	T158	T1
198	DDRB	CN52	1	GND	Ground			8	CN62	Set Sensor
			2	GND	Ground			7		Decurler HP Sensor
			3	DECU_HP_SNS_I	INPUT		HP	6		
			4	+5V_F	Power			5		
			5	GND	Ground			4		Decurler Limit Sensor
			6	DECU_OVR_SNS_I	INPUT	Normal	Over-limit	3		
			7	+5V_F	Power			2		
			8	DECU_SET_I	INPUT	Set	Not Set	1		Set Sensor
199	DDRB: Relay	CN62	1	DECU_SET_I				8	CN62	Set Sensor
199			2	GND				3	CN66	Decurler HP Sensor
	CN62		3	DECU_HP_SNS_I				2		
			4	+5V_F				1		
199			5	GND				3	CN65	Decurler Limit Sensor
			6	DECU_OVR_SNS_I				2		
			7	+5V_F				1		
200	DDRB	CN53	1	+24VS_Z3R_1st Tray	Power			5	CN64	Decurler Transport Motor
			2	DEC_HNS_STM_A	OUTPUT			6		
			3	DEC_HNS_STM_-A	OUTPUT			4		
			4	+24VS_Z3R_1st Tray	Power			2		
			5	DEC_HNS_STM_B	OUTPUT			3		
			6	DEC_HNS_STM_-B	OUTPUT			1		
			7	+24VS_Z3R_2nd Tray	Power			6	CN63	Decurler Lift Motor
			8	DEC_UD_STM_A	OUTPUT			5		
			9	DEC_UD_STM_-A	OUTPUT			4		
			10	+24VS_Z3R_2nd Tray	Power			3		
			11	DEC_UD_STM_B	OUTPUT			2		
			12	DEC_UD_STM_-B	OUTPUT			1		
			2	-				2	-	NC
			3	-				3		
			4	-				4		
			5	-				5		
303	CTL	P1	1	GND				1	P2	HDD
			2	A+				2		
			3	A-				3		
			4	GND				4		
			5	B-				5		
			6	B+				6		
			7	GND				7		
34	CTL	CN1	1	-				3	CN2	HDD
		CN2	3	-				3	CN3	
		CN1	2	-				2	CN2	
		CN2	2	-				2	CN3	
305	CTL	P1	1	GND				1	P2	HDD
			2	A+				2		
			3	A-				3		
			4	GND				4		
			5	B-				5		
			6	B+				6		
			7	GND				7		

harness	Connector (FROM)			Signal Information				Connector (TO)		
No	To Connector	No	Pin No	Signal Name	Direction	L	H	No	Pin No	To Connector
354	Tubular lamp: Relay	CN9	1	24V				6	CN10	IPU
			2	XPATLITE_B				5		
	CN8		3	XPATLITE_Y				4		
			4	XPATLITE_R				3		
			5	XBEEP_ON				2		
			6	GND				1		
351	Operation panel	CN1	1	VBUS				1	CN2	IPU
			2	-DATA				2		
			3	+DATA				3		
			4	NC				4		
			5	GND	Ground			5		
401	SIO	CN374	1	LED_PWM	INPUT			13	CN363	SBU
			2	GND	Ground			12		
			3	GND	Ground			11		
			4	+3.3V	Power			10		
			5	+3.3V	Power			9		
			6	+3.3V	Power			8		
			7	GND	Ground			7		
			8	Ground	Ground			6		
			9	+5.9V	Power			5		
			10	+5.9V	Power			4		
			11	GND	Ground			3		
			12	+10V	Power			2		
			13	GND	Ground			1		
402	SIO	CN375	1	GND	Ground			3	CN1	Scanner Home Sensor
			2	HPS_S	INPUT	Outrange	In Range	2		
			3	+5V	Power			1		
			4	GND	Ground			3	CN2	Original Size Sensor2
			5	APS1_N	INPUT	Detect	Not Detect	2		
			6	+5VAPS	OUTPUT	APS OFF	APS ON	1		
			7	GND	Ground			3	CN3	Original Size Sensor1
			8	APS2_N	INPUT	Detect	Not Detect	2		
			9	+5VAPS	OUTPUT	APS OFF	APS ON	1		
			10	+24V	Power			5	CN351	IDB
			11	LED_PWM	OUTPUT			4		
			12	GND	Ground			3		
			13	LED1_ON_N	OUTPUT	LED Light	LED Extinction	2		
			14	LED1_ERR	INPUT	Normal	Trouble	1		
403	IDB	CN352	1	GND	Ground			1	CN350	LEDB
			2	LED_6	INPUT			2		
			3	LED_5	INPUT			3		
			4	LED_4	INPUT			4		
			5	V_LED	Power			5		
			6	V_LED	Power			6		
			7	LED_3	INPUT			7		
			8	LED_2	INPUT			8		
			9	LED_1	INPUT			9		
			10	GND	Ground			10		
402	SIO	CN371	6	/B	INPUT			1	CN1	Scanner Motor
			5	24V	OUTPUT			2		
			4	B	INPUT			3		
			3	A	INPUT			4		
			2	24V	OUTPUT			5		
			1	/A	INPUT			6		
405	SBU	CN361	1	GND	Ground			A1	CN1	IPU

			30	-				21		
			31	-				20		
			32	-				19		
			33	-				18		
			34	-				17		
			35	-				16		
			36	-				15		
			37	-				14		
			38	-				13		
			39	-				12		
			40	-				11		
			41	-				10		
			42	-				9		
			43	-				8		
			44	-				7		
			45	-				6		
			46	-				5		
			47	-				4		
			48	-				3		
			49	-				2		
			50	-				1		
351	IPU	CN1	1	GND	Ground			1	CN4	Operation panel
			2	GND	Ground			2		
			3	GND	Ground			3		
			4	SDMODE				4		
			5	LDET_IN				5		
			6	ENG_ENABLE				6		
			7	PONOPE				7		
			8	ECO_SW				8		
			9	POKUSB				9		
			10	OPE_CTLERR				10		
			11	OPE_LED				11		
			12	+5VX	Power			12		
			13	+5VX	Power			13		
			14	+5VX	Power			14		
			15	+5VX	Power			15		
		CN3	1	XFOT_SW				16		
			2	GND	Ground			17		
		CN2	3	GND	Ground			18		
			1	+24V	Power			19		
			2	NC				20		
352	Operation panel: Relay	CN7	1	24V				6	CN8	IPU
			2	XPATLITE_B				5		
	CN9		3	XPATLITE_Y				4		
			4	XPATLITE_R				3		
			5	XBEEP_ON				2		
			6	GND				1		
306	IPU	CN1	1	VBUS				1	CN2	Operation panel
			2	-DATA				2		
			3	+DATA				3		
			4	GND	Ground			4		
354	IPU: Relay	CN5	20	GND				1	CN6	Operation panel
			19	GND				2		
	CN4		18	GND				3		
			17	SDMODE				4		
			16	LDET_IN				5		
			15	ENG_ENABLE				6		
			14	PONOPE				7		
			13	ECO_SW				8		
			12	POKUSB				9		
			11	OPE_CTLERR				10		
			10	OPE_LED				11		
			9	+5VX				12		
			8	+5VX				13		
			7	+5VX				14		
			6	+5VX				15		
			5	NC				16		
			4	XFOT_SW				17		
			3	GND				18		
			2	GND				19		
			1	+24V				20		

harness	Connector (FROM)			Signal Information				Connector (TO)		
No	To Connector	No	Pin No	Signal Name	Direction	L	H	No	Pin No	To Connector
604			11	MFSYNC0_N				6		
			12	CLK_SY				4		
			13	SYCS_N				3		
			14	SYDO_N				2		
			15	SYDI_N				1		
	NC	-	-	-				14		
			-	-				11		
			-	-				9		
			-	-				7		
			-	-				5		
351	LDB	CN5	1	DETP_N				3	CN1	Synchronization Detection Board (Leading Edge)
			2	+3.3V_DP	Power			2		
			3	GND	Ground			1		
			4	EDETP_N				3	CN2	Synchronization Detection Board (Trailing Edge)
			5	+3.3V_DP	Power			2		
			6	GND	Ground			1		
28	Polygon PCB	CN410	1	24V	Power			1	CN2	IPU
			2	GND	Ground			2		
		CN411	4	ON_N				3		
			3	SCREADY_N				4		
			2	CLOCK				5		
			5	GND	Ground			6		
			1	NC				-	-	NC
			6	NC				-		
			2	I2CSDA				2	CN2	IPU
			3	PWM_IN				3		
			4	+5V	Power			4		
			5	Analog Output				5		
			6	GND	Ground			6		
	DC Motor	a1	1	a1				2	CN1	RYB
		a2	1	a2				1		
552	RYB: Relay	CN728	1	GND				2	CN718	Set Sensor
			2	Set Sensor				1		
	CN634		3	GND				6	CN717	Size Sensor
			4	Size Sensor5				5		
			5	Size Sensor4				4		
			6	Size Sensor3				3		
			7	Size Sensor2				2		
			8	Size Sensor1				1		
553	RYB: Relay	CN1	2	Left Tray Set Sensor				3	CN1	Left Tray Set Sensor
			1	Rear Fence Drive Motor reverse				2	CN2	Rear Fence Drive Motor
	CN871		9	Rear Fence Drive Motor proper				1		
			5	Rear Fence HP Sensor GND				3	CN3	Rear Fence HP Sensor
			6	Rear Fence HP Sensor				2		
			7	Rear Fence HP Sensor VCC				1		
			10	Rear Fence Return Sensor GND				3	CN4	Rear Fence Return Sensor
			11	Rear Fence Return Sensor				2		
			12	Rear Fence Return Sensor VCC				1		
			13	Left Tray Paper Set Sensor				3	CN5	Left Tray Paper Set Sensor
			14	Left Tray Paper Set Sensor GND				2		
			15	Left Tray Paper Set Sensor VCC				1		
			8	Earth				1	T1	Earth
			4	NC				-	-	NC
			16	NC				-	-	NC
554	RYB: Relay	CN1	14	Right Tray Set Sensor				30	CN1	RYB

			2	GND	Ground			B17		
			3	F_TA-	OUTPUT			A2		
			4	F_TA+	OUTPUT			B16		
			5	F_TB-	OUTPUT			A3		
			6	F_TB+	OUTPUT			B15		
			7	F_TC-	OUTPUT			A4		
			8	F_TC+	OUTPUT			B14		
			9	F_LVCK-	OUTPUT			A5		
			10	F_LVCK+	OUTPUT			B13		
			11	F_TD-	OUTPUT			A6		
			12	F_TD+	OUTPUT			B12		
			13	F_TE-	OUTPUT			A7		
			14	F_TE+	OUTPUT			B11		
	SBU	CN362	1	GND	Ground			A11		
			2	GND	Ground			B7		
			3	L_TA-	OUTPUT			A12		
			4	L_TA+	OUTPUT			B6		
			5	L_TB-	OUTPUT			A13		
			6	L_TB+	OUTPUT			B5		
			7	L_TC-	OUTPUT			A14		
			8	L_TC+	OUTPUT			B4		
			9	L_LVCK-	OUTPUT			A15		
			10	L_LVCK+	OUTPUT			B3		
			11	L_TD-	OUTPUT			A16		
			12	L_TD+	OUTPUT			B2		
			13	L_TE-	OUTPUT			A17		
			14	L_TE+	OUTPUT			B1		
			15	SFGATE_N	INPUT	ON	OFF	A8		
			16	SHGATE_N	INPUT	ON	OFF	B10		
			17	SYDI_SBU	OUTPUT			A9		
			18	XSYCS_SBU	INPUT			B9		
			19	SYDO_SBU	INPUT			A10		
			20	SYCLK_SBU	INPUT			B8		
351	LDB	CN3	1	+5VS	Power			20	CN2	IPU
			2	+5VS	Power			19		
			3	+5VS	Power			18		
			4	GND	Ground			17		
			5	GND	Ground			16		
			6	GND	Ground			15		
			7	TNCNTEND0				13		
			8	VTECINT				12		
			9	PFGATE0_N				10		
			10	MLSYNC0_N				8		

harness	Connector (FROM)		Signal Information						Connector (TO)	
No	To Connector	No	Pin No	Signal Name	Direction	L	H	No	Pin No	To Connector
601	Status Light	CN1	1	24V	Power			6	CN2	OPU
			2	XPATLITE_B				5		
			3	XPATLITE_Y				4		
			4	XPATLITE_R				3		
			5	XBEEP_ON				2		
			6	GND	Ground			1		
			7	NC				-	-	NC
602	ADF	CN116	1	PWR_CNTL				16	CN901	CNB
			2	GND	Ground			15		
			3	5V_DFIN				14		
			4	DFGATE				13		
			5	RXD(Main Machine-->DF)				12		
			6	SETSN				11		
			7	TXD(DF-->Main Machine)				10		
			8	5VE	Power			9		
			9	24V_IN	Power			8		PSU-B
			10	24V_IN	Power			7		
			11	24V_IN	Power			6		
			12	24V_IN	Power			5		
			13	GND	Ground			4		
			14	GND	Ground			3		
			15	GND	Ground			2		
			16	GND	Ground			1		
	Interface cable	Shield	-	F.G(DF)	Ground			-	T1	F.G(DF)
			-	F.G(Main Machine)	Ground			-	T2	F.G(Main Machine)
603	ADF	CN1	A1	GND	Ground			A1	CN2	IPU
			B15	GND	Ground			B15		
			A4	E_SDC-				A4		
			B12	E_SDC+				B12		
			A3	E_SDD-				A3		
			B13	E_SDD+				B13		
			A2	E_SDE-				A2		
			B14	E_SDE+				B14		
			A5	ESCLK-				A5		
			B11	ESCLK+				B11		
			A7	E_SDA-				A6		
			B9	E_SDA+				B10		
			A6	E_SDB-				A7		
			B10	E_SDB+				B9		
			A8	GND	Ground			A8		
			B8	GND	Ground			B8		
			A11	O_SDC-				A9		
			B5	O_SDC+				B7		
			A10	O_SDD-				A10		
			B6	O_SDD+				B6		
			A9	O_SDE-				A11		
			B7	O_SDE+				B5		
			A12	OSCLK-				A12		
			B4	OSCLK+				B4		
			A14	O_SDA-				A13		
			B2	O_SDA+				B3		
			A13	O_SDB-				A14		
			B3	O_SDB+				B2		
			A15	GND	Ground			A15		
			B1	GND	Ground			B1		
604	IPU	CN538	1	5VE	Power			6	CN1	MKB
			2	5VE	Power			5		
			3	TXD_CTL				4		
			4	RXD_CTL				3		
			5	GND	Ground			2		
			6	GND	Ground			1		

CN870		2	+5V(Front Side Fence Open Sensor)				1	CN2	Front Side Fence Open
		3	Front Side Fence Open Sensor				2		
		4	GND(Front Side Fence Open Sensor)				3		
		5	+5V(Front Side Fence Close Sensor)				1	CN3	Front Side Fence Close Sensor
		6	Front Side Fence Close Sensor				2		
		7	GND(Front Side Fence Close Sensor)				3		
		8	+5V(Rear Side Fence Open Sensor)				1	CN4	Rear Side Fence Open
		9	Rear Side Fence Open Sensor				2		
		10	GND(Rear Side Fence Open Sensor)				3		
		11	+5V(Rear Side Fence Close Sensor)				1	CN5	Rear Side Fence Close Sensor
		12	Rear Side Fence Close Sensor				2		
		13	GND(Rear Side Fence Close Sensor)				3		
		1	+24V(Front Side Fence Solenoid)				1	CN6	Front Side Fence Open Solenoid
		15	Front Side Fence Open Solenoid				2		
		18	GND(Lower Limit Sensor)				1	CN7	Lower Limit Sensor
		19	Lower Limit Sensor				2		
		20	+5V(Lower Limit Sensor)				3		
		21	+5V(Paper Height Sensor)				1	BL	Paper Height Sensor
		22	Paper Height Sensor1				2	CN8	
		23	GND(Paper Height Sensor)				7	BL	
		24	Paper Height Sensor2				2	CN9	
		25	Paper Height Sensor3				2	CN10	
		26	Paper Height Sensor4				2	CN11	
		27	GND(Right Tray Paper Set)				1	CN12	Right Tray Paper Set Sensor
		28	Right Tray Paper Set Sensor				1		
		29	+5V(Right Tray Paper Set)				1		
		17	+24V(Rear Side Fence Solenoid)				1	CN13	Rear Side Fence Open Solenoid
		31	Rear Side Fence Open Solenoid				1		
		16	Earth				1		Earth
		32	NC				-	-	NC
BL	BL	2	Paper Height Sensor1 VCC	Power			1	CN8	Paper Height Sensor1
		3	Paper Height Sensor2 VCC	Power			1	CN9	Paper Height Sensor2
		4	Paper Height Sensor3 VCC	Power			1	CN10	Paper Height Sensor3
		5	Paper Height Sensor4 VCC	Power			1	CN11	Paper Height Sensor4
		8	Paper Height Sensor1 GND	Ground			3	CN8	Paper Height Sensor1
		9	Paper Height Sensor2 GND	Ground			3	CN9	Paper Height Sensor2
		10	Paper Height Sensor3 GND	Ground			3	CN10	Paper Height Sensor3
		11	Paper Height Sensor4 GND	Ground			3	CN11	Paper Height Sensor4
NC	-	6	NC				-	-	NC
NC	-	12	NC				-	-	NC

D179/D180/D181 ELECTRICAL COMPONENT LAYOUT

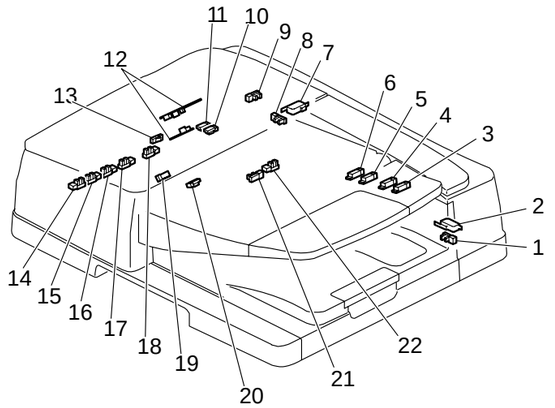

d1797901

Fig1

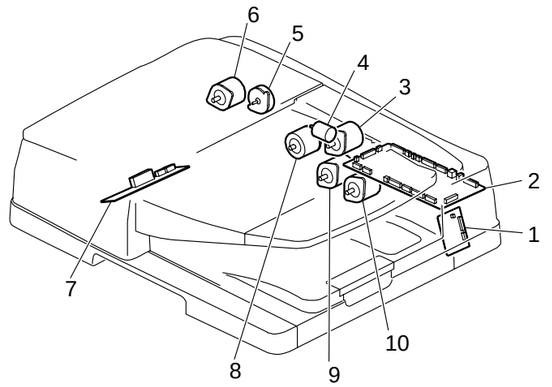

d1797902

Fig2

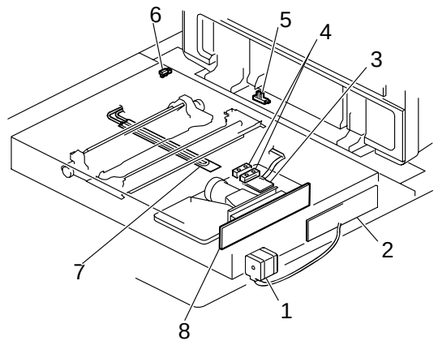

d1797903

Fig3

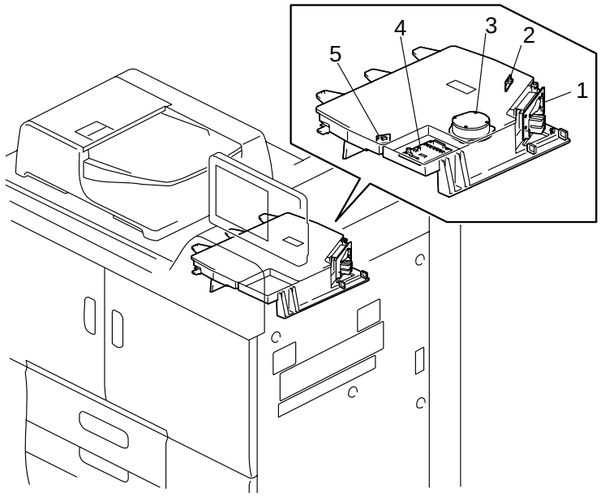

Fig4

d1797904

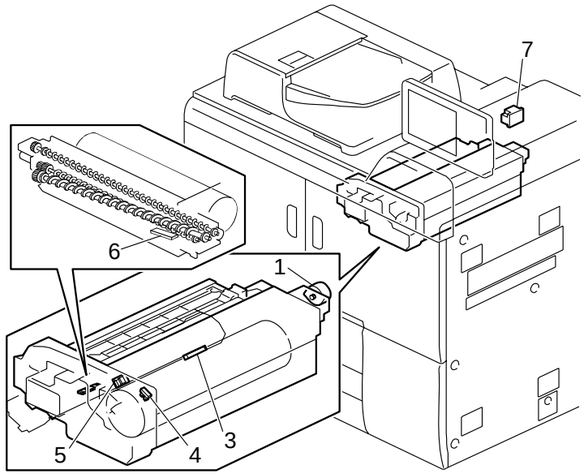

Fig5

d1797905

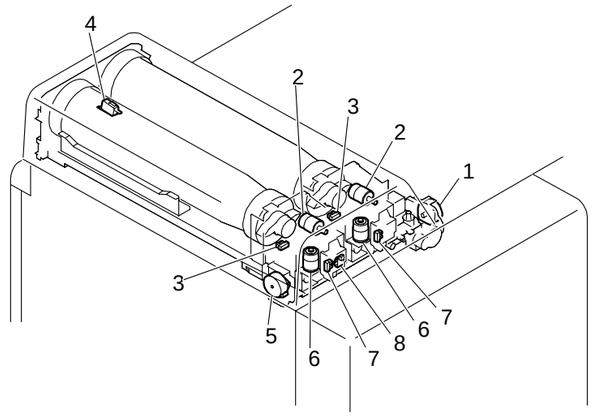

d1797906

Fig6

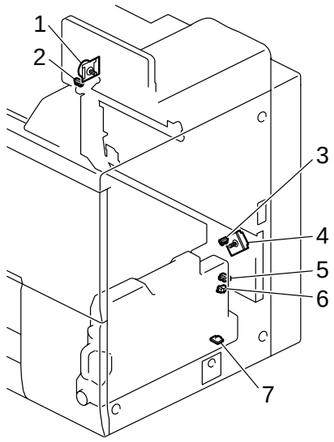

Fig7

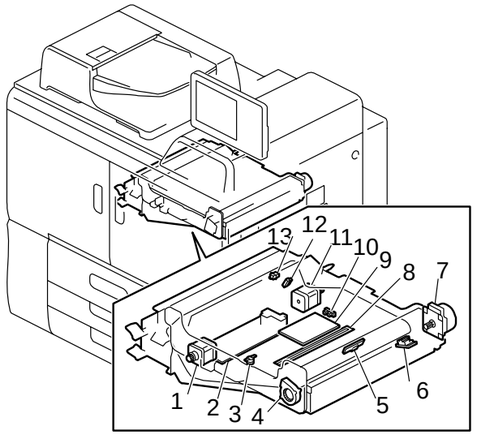

d1797908

Fig8

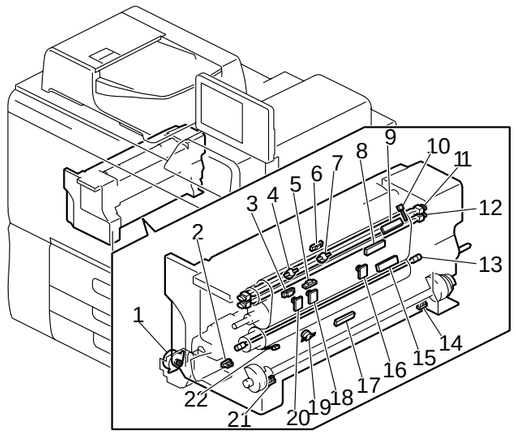

d1797909

Fig9

D179/D180/D181 ELECTRICAL COMPONENT LAYOUT

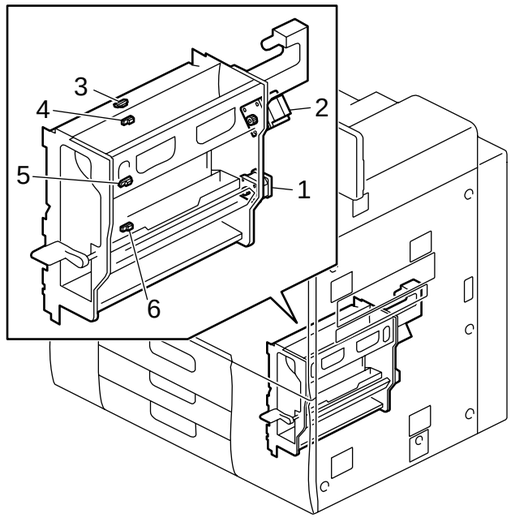

d1797910

Fig10

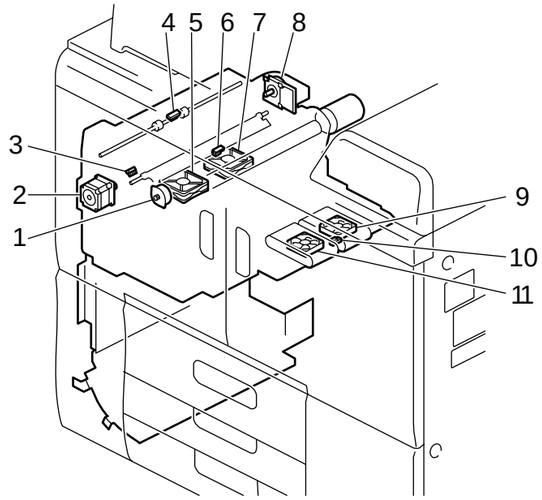

d1797911

Fig11

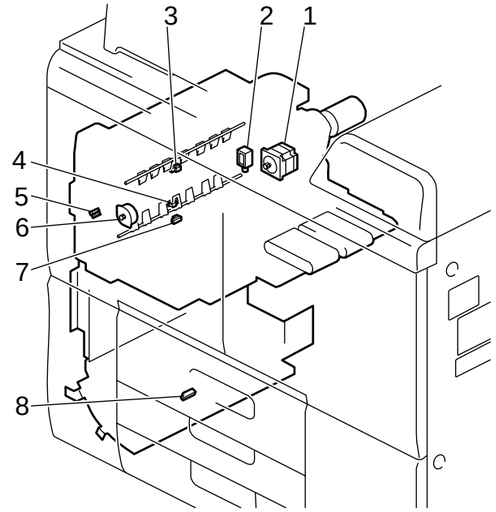

d1797912

Fig12

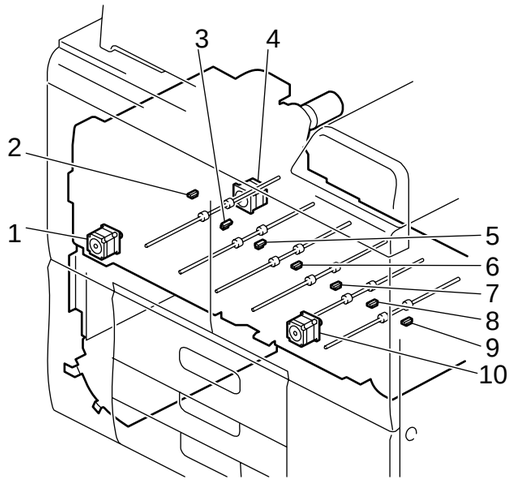

d1797913

Fig13

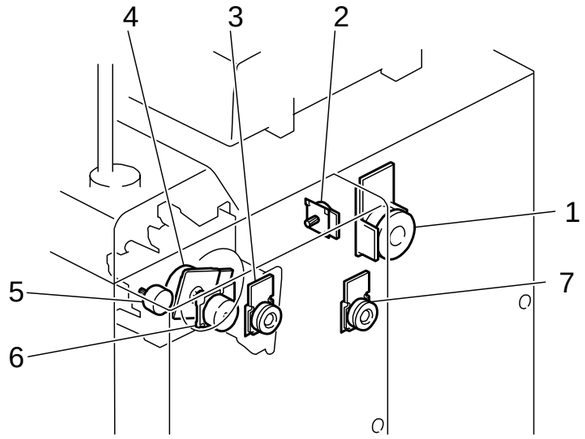

d1797914

Fig14

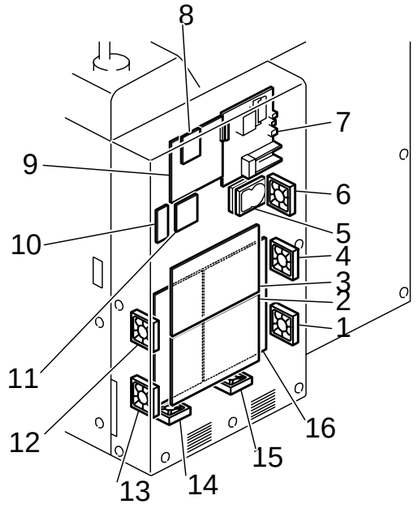

d1797915

Fig15

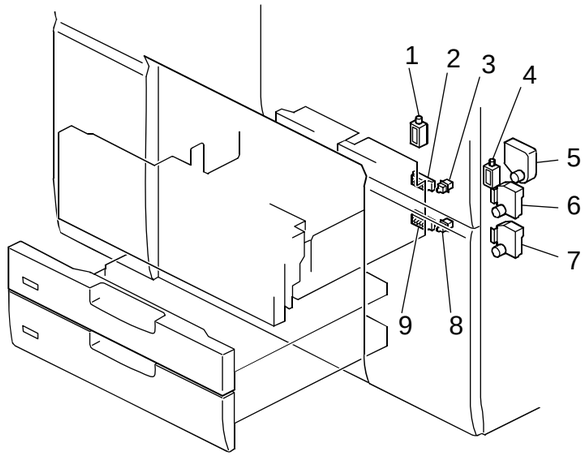

d1797916

Fig16

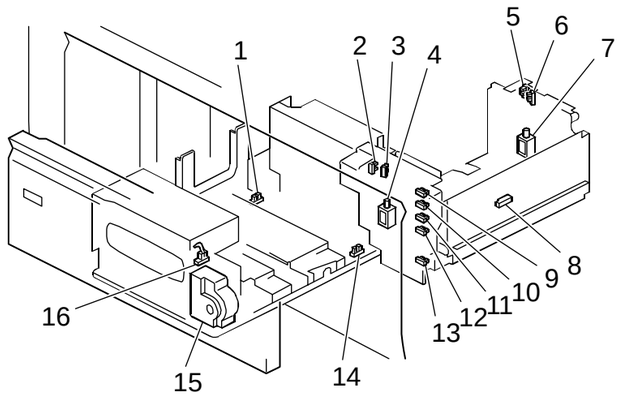

d1797917

Fig17

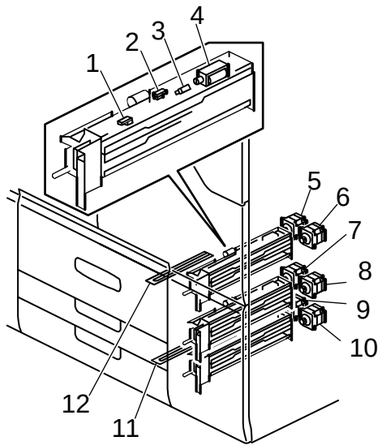

d1797918

Fig18

D179/D180/D181 ELECTRICAL COMPONENT LAYOUT

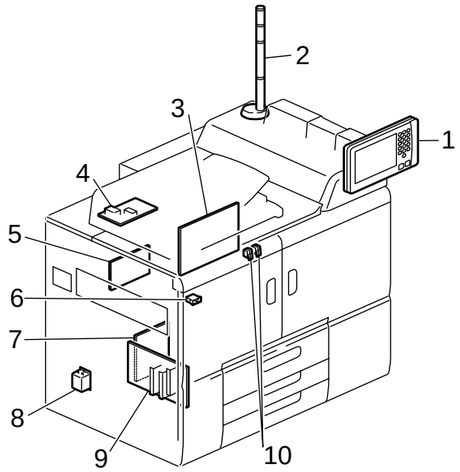

Fig19 d1797919

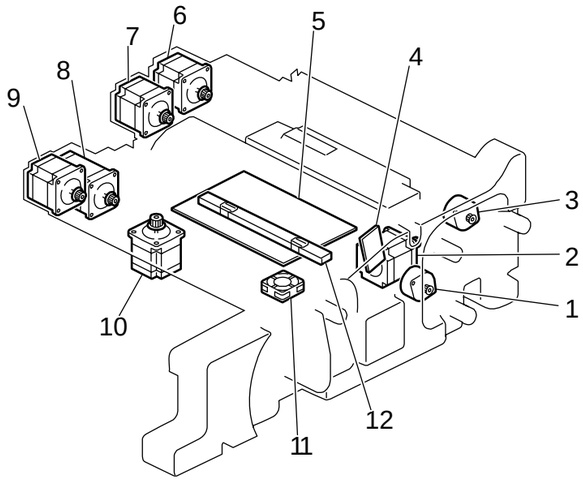

Fig20 d1797920

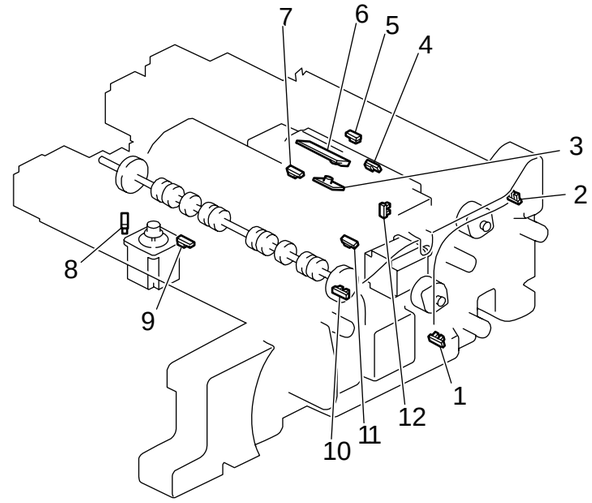

Fig21 d1797921

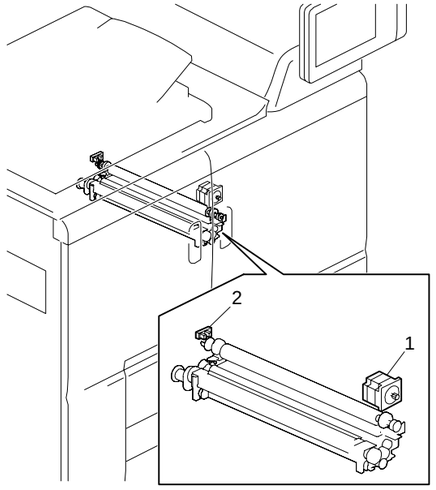

d1797922

Fig22

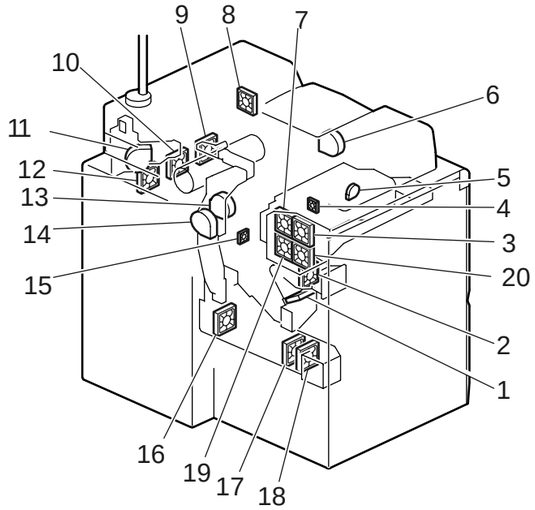

Fig23 d1797923

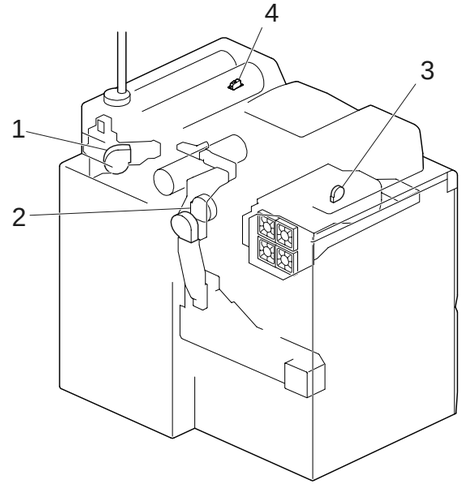

Fig24

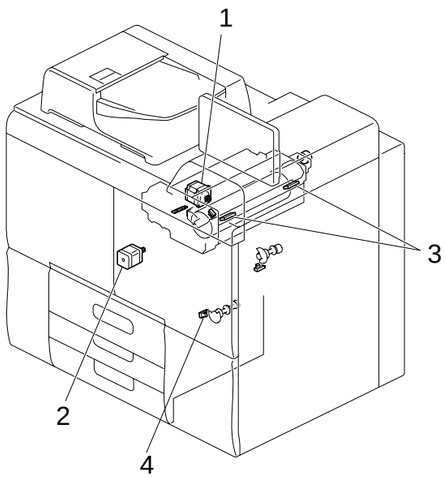

Fig25

D179/D180/D181 ELECTRICAL COMPONENT LAYOUT

Symbol	Index No.	Description	P to P
Motors			
M1	Fig2−3	Feed Motor	DF-C10
M2	Fig2−4	Bottom Plate Lift Motor	3-E5
M3	Fig2−5	Entrance Motor	DF-D10
M4	Fig2−6	Transport Motor	DF-B1
M5	Fig2−8	Pickup Roller Motor	DF-B3
M6	Fig2−9	Bottom Plate Lift Motor	3-E5
M7	Fig2−10	Exit Motor	DF-D10
M8	Fig3−1	Scanner Motor	4-A5
M9	Fig4−3	Polygon Mirror Motor	4-A5
M10	Fig5−1	Charge Wire Cleaner Motor	1-C7
M11	Fig5−7	Drum Motor	1-C6
M12	Fig6−1	Toner Feed Motor	1-C7
M13	Fig6−2	Bottle Inner Cap Motors - Left, Right	3-B9
M14	Fig6−5	Toner Agitator Motor	1-B7
M15	Fig6−6	Toner Supply Bottle Motors - Left, Right	3-B9
M16	Fig7−1	Used Toner Collection Motor	1-B3
M17	Fig7−4	Used Toner Bottle Motor	1-E11
M18	Fig8−1	PTR Separation Motor	3-G8
M19	Fig8−7	ITB Drive Motor	3-G8
M20	Fig8−11	Belt Centering Motor	3-G9
M21	Fig9−1	Fusing Cleaning Web Motor	3-H7
M22	Fig10−1	Vertical Transport Motor	3-B7
M23	Fig10−2	Bank Exit Motor	3-B7
M24	Fig11−1	Exit Junction Gate Motor	2-F5
M25	Fig11−2	Invert Entrance Motor	2-F5
M26	Fig11−8	Exit Motor	2-F1
M27	Fig12−1	Exit Invert Junction Gate Motor	2-F5
M28	Fig12−6	Exit Invert Junction Gate Motor	2-F5
M29	Fig13−1	Duplex Transport Motor 1	2-F5
M30	Fig13−4	Duplex Invert Motor	2-F5
M31	Fig13−10	Duplex Transport Motor 2	2-B9
M32	Fig14−1	Fusing Motor	1-C4
M33	Fig14−2	Used Toner Collection Motor	1-B4
M34	Fig14−3	ITB/PTR Drive Motor	1-B7
M35	Fig14−4	Development Motor	1-B5
M36	Fig14−5	Drum Cleaning Unit Motor	1-B6
M37	Fig14−6	Drum Motor	1-C6
M38	Fig16−5	Tray Lift Motor - Tray 1	3-E5
M39	Fig16−6	Tray Lift Motor - Tray 2	3-E5
M40	Fig16−7	Tray Lift Motor - Tray 3	3-E5
M41	Fig17−15	Rear Fence Motor	3-A4
M42	Fig18−5	Paper Feed Motor - Tray 1	3-B8
M43	Fig18−6	Paper Transport Motor - Tray 1	3-B8
M44	Fig18−7	Paper Feed Motor - Tray 2	3-B8
M45	Fig18−8	Paper Transport Motor - Tray 2	3-B8
M46	Fig18−9	Paper Feed Motor - Tray 3	3-B7
M47	Fig18−10	Paper Transport Motor - Tray 3	3-A7
M48	Fig20−1	Main Relay Separation Motor	2-B10
M49	Fig20−2	Trailing Edge Shift Motor	2-B10
M50	Fig20−3	LCIT Relay Separation Motor	2-B10
M51	Fig20−6	Registration Entrance Motor	2-B10
M52	Fig20−7	Registration Timing Motor	2-B9
M53	Fig20−8	Registration Gate Motor	2-B8
M54	Fig20−9	Transfer timing sensor	2-G10
M55	Fig20−10	Registration Shift Motor	2-F8
M56	Fig22−1	PTR Separation Motor	3-G9
M57	Fig14−7	Pressure Roller Lift Motor	2-E5
M58	Fig25−2	PTB Motor	2-G8
Symbol	**Index No.**	**Description**	**P to P**
Sensors			
SEN1	Fig25−3	Lubricant End Sensor	1-G9
SEN2	Fig1−1	Open/Close Sensor	DF-A10
SEN3	Fig1−3	Original Size Sensor (LG)	DF-D6
SEN4	Fig1−4	Original Size Sensor (A4)	DF-D6
SEN5	Fig1−5	Original Size Sensor (B5)	DF-D6
SEN6	Fig1−6	Original Size Sensor (A4 LEF, LT LEF)	DF-D6

SEN7	Fig1−7	Feed Cover Open Sensor	DF-E10
SEN8	Fig1−8	Bottom Plate Position Sensor	DF-D1
SEN9	Fig1−9	Pickup Roller HP Sensor	DF-C1
SEN10	Fig1−10	Separation Sensor	DF-C1
SEN11	Fig1−11	Skew Correction Sensor	DF-C1
SEN12	Fig1−12	Double-Feed Sensors (Lower: Emitter/Upper: Receptor)	DF-F/G10
SEN13	Fig1−13	Scan Entrance Sensor	DF-D2
SEN14	Fig1−14	Width Size Sensor 5	DF-A1
SEN15	Fig1−15	Width Size Sensor 4	DF-A1
SEN16	Fig1−16	Width Size Sensor 3	DF-A1
SEN17	Fig1−17	Width Size Sensor 2	DF-B1
SEN18	Fig1−18	Width Size Sensor 1	DF-B1
SEN19	Fig1−19	Registration Sensor	DF-D2
SEN20	Fig1−20	Exit sensor	DF-D1
SEN21	Fig1−21	Bottom Plate HP Sensor	DF-B9
SEN22	Fig1−22	Original Set Sensor	DF-B9
SEN23	Fig3−4	APS Sensor	4-A4
SEN24	Fig3−5	Platen Sensor	4-B8
SEN25	Fig3−6	Scanner HP Sensor	4-B4
SEN26	Fig5−3	Drum Potential Sensor	1-F8
SEN29	Fig5−5	PCDU Temperature/Humidity Sensor	1-F10
			3-G10
SEN31	Fig5−6	TD Sensor (T Sensor)	1-A5
SEN32	Fig6−3	Toner Supply Bottle Set Sensor	3-B9
SEN33	Fig6−7	Toner Supply Bottle Inner Cap Sensors - Left, Right	1-A6
SEN34	Fig6−8	Toner Supply Bottle End Sensor	1-E8
SEN35	Fig7−2	Used Toner Collection Lock Sensor	1-B3
SEN36	Fig7−3	Used Toner Bottle Full Sensor	1-E11
SEN37	Fig7−5	Used Toner Bottle Near Full Sensor	1-E11
SEN38	Fig7−7	Temperature/Humidity Sensor	1-E11
SEN39	Fig8−5	ID Sensor	3-G10
SEN40	Fig5−4	Cleaning Pad HP Sensor	1-F9
SEN41	Fig8−6	Belt Centering Sensor	3-G10
SEN42	Fig8−10	ITB Roller Separation Sensor	3-G10
SEN43	Fig8−12	Belt Centering Roller HP Sensor	3-G11
SEN44	Fig9−2	Fusing Cleaning Web End Sensor	3-G7
SEN45	Fig9−3	Fusing Unit Paper Sensor	3-G8
SEN46	Fig9−5	Fusing Exit Sensor	3-G8
SEN47	Fig25−4	Main Relay Sensor	※
SEN48	Fig9−8	Fusing Temperature Sensor (Heating Roller Center)	3-G5
SEN49	Fig9−9	Fusing Temperature Sensor (Heating Roller End)	3-G5
SEN50	Fig9− 6	Fusing Belt Paper Sensor	3-G5
SEN51	Fig9−15	Fusing Temperature Sensor (Hot Roller Center)	3-G5
SEN52	Fig9−17	Fusing Temperature Sensor (Pressure Roller)	3-G8
SEN53	Fig9−21	Pressure Roller Cam HP Sensor A/B	3-G8
SEN54	Fig10−3	Bank Exit Sensor	3-E4
SEN55	Fig10−4	Vertical Transport Sensor	3-D4
SEN56	Fig10−5	2nd Transport Sensor	3-E4
SEN57	Fig10−6	3rd Transport Sensor	3-E4
SEN58	Fig11−3	Exit Junction Gate Sensor	2-F4
SEN59	Fig11−4	Exit Sensor	2-F2
SEN60	Fig11−6	Exit Junction Gate Sensor	2-F4
SEN61	Fig11−10	Paper Height Sensor	3-A6
SEN62	Fig12−3	Exit Invert Sensor	2-G4
SEN63	Fig12−4	Purge Relay Sensor	2-F2
SEN64	Fig12−5	Exit Invert Junction Gate Sensor	2-F3
SEN65	Fig12−7	Duplex Invert Sensor	2-F4
SEN66	Fig12−8	Purged Paper Sensor	3-E6
SEN67	Fig13−2	Duplex Transport Sensor 1	2-F3
SEN68	Fig13−3	Duplex Transport Sensor 2	2-F3
SEN69	Fig13−5	Duplex Transport Sensor 3	2-F3
SEN70	Fig13−6	Duplex Transport Sensor 4	2-F3
SEN71	Fig13−7	Duplex Transport Sensor 5	2-F6
SEN72	Fig13−8	Duplex Transport Sensor 6	2-F6
SEN73	Fig13−9	Duplex Unit Exit Sensor	2-G7
SEN74	Fig16−2	Tray 2 Paper Size Sensor	3-E6
SEN75	Fig16−8	Tray 3 Paper Size Sensor	3-E6
SEN76	Fig17−1	Rear Fence HP Sensor	3-A5

D179/D180/D181 ELECTRICAL COMPONENT LAYOUT

SEN77	Fig17−2	Tandem Tray End Fence Close Sensor - Front	3-A6
SEN78	Fig17−3	Tandem Tray End Fence Open Sensor - Front	3-A6
SEN79	Fig17−5	Tandem Tray End Fence Close Sensor - Rear	3-A6
SEN80	Fig17−6	Tandem Tray End Fence Open Sensor - Rear	3-A6
SEN81	Fig17−8	Right Tray Paper End Sensor	3-B6
SEN82	Fig17−9	Paper Height Sensor 1	3-A6
SEN83	Fig17−10	Paper Height Sensor 2	3-A6
SEN84	Fig17−11	Paper Height Sensor 3	3-A6
SEN85	Fig17−12	Paper Height Sensor 4	3-A6
SEN86	Fig17−13	Lower Limit Sensor	3-A5
SEN87	Fig17−14	Rear Fence Return Sensor	3-A5
SEN88	Fig17−16	Left Tray Paper End Sensor	3-A6
SEN89	Fig18−1	Feed Sensors (Tray 1, 2, 3)	3-E2/E3/E4
SEN90	Fig18−2	Paper End Sensors (Tray 1, 2, 3)	3-E1/E2/E3
SEN91	Fig18−3	Paper Upper Limit Sensors (Tray 1, 2, 3)	3-E1/E2/E3
SEN92	Fig21−1	Main Relay HP Sensor	2-F10
SEN93	Fig21−2	LCT Relay HP Sensor	2-G10
SEN95	Fig21−4	Registration Entrance Sensor	2-G8
SEN96	Fig21−5	LCT Relay Sensor	2-B8
SEN98	Fig21−7	Registration Timing Sensor	2-F8
SEN99	Fig21−8	LE Shift Unit HP Sensor	2-E10
SEN100	Fig21−9	Transfer Timing Sensor	2-G10
SEN101	Fig21−10	Registration Shift HP Sensor	2-E11
SEN102	Fig9−16	Thermopile - Front	1-A2
SEN103	Fig9−18	Thermopile - Rear	1-A2
SEN104	Fig21−11	Main Relay Separation HP Sensor	2-E7
SEN105	Fig21−12	TE Shift HP Sensor	2-E7
SEN106	Fig9−20	Thermopile − Near Front	1-A2
SEN107	Fig22−2	PTR Separation Sensor	3-G10
Symbol	**Index No.**	**Description**	**P to P**
Switches			
SW1	Fig19−15	Interlock Switch − Rightdoor 2	3-B4
SW2	Fig6−4	Toner Bottle Cover Switch	3-A3
SW3	Fig7−6	Used Toner Bottle Set Switch	1-E11
SW4	Fig8−13	ITB Cleaning Unit Set Switch	3-G11
SW5	Fig16−3	Tray 2 Set Switch	3-E6
SW6	Fig16−9	Tray 3 Set Switch	3-E6
SW7	Fig19−6	Main Switch	1-E3
SW8	Fig19−10	Interlock Switch − Front Left	1-E11
SW9	Fig1−2	Lift Interlock Switch	DF-F10
SW10	Fig19−11	Interlock Switch − Front Right	3-B4
SW11	Fig19−12	Interlock Switch − Leftdoor 1	3-B4
SW12	Fig19−13	Interlock Switch − Leftdoor 2	3-B4
SW13	Fig19−14	Interlock Switch − Rightdoor 1	3-B4
Symbol	**Index No.**	**Description**	**P to P**
Solenoids			
SOL1	Fig12−2	Invert Junction Gate Solenoid	2-F2
SOL2	Fig16−1	Left Tray Lock Solenoid	3-E6
SOL3	Fig16−4	Lock Release Solenoid	3-C6
SOL4	Fig17−4	End Fence Open/Close Solenoid - Front	3-A5
SOL5	Fig17−7	End Fence Open/Close Solenoid - Rear	3-A5
SOL6	Fig18−4	Pickup Solenoids (Tray 1, 2, 3)	3-E3
Symbol	**Index No.**	**Description**	**P to P**
FANs			
FAN1	Fig11−5	Exit Exhaust - Fan	2-B4
FAN2	Fig11−7	Exit Exhaust Fan - Rear	2-G9
FAN3	Fig11−9	Paper Transport Fan - Rear	2-G9
FAN4	Fig11−11	Paper Transport Fan - Front	2-G9
FAN5	Fig15−1	PSU Intake Fan M2 - Right	4-G7
FAN6	Fig15−4	PSU Intake Fan M1 - Right	4-G7
FAN7	Fig15−6	HDD Fan	4-E2
FAN8	Fig15−12	PSU Intake Fan M1 - Left	4-G7
FAN9	Fig15−13	PSU Intake Fan M2 - Left	4-G7
FAN10	Fig15−14	PSU Cooling Fan - Vertical Left	4-H5
FAN11	Fig15−15	PSU Cooling Fan - Vertical Right	4-H6
FAN12	Fig20−11	CIS Cleaning Fan	2-F9
FAN13	Fig23−1	HP Cooling Exhaust Fan	2-C1

FAN14	Fig23−2	HP Cooling Intake Fan	2-C1
FAN15	Fig23−3	Duplex Lower Cooling Fan - Rear	2-G2
FAN16	Fig23−4	PTR Cooling Fan - Front	2-F9
FAN17	Fig23−5	CIS Cleaning Fan	2-F9
FAN18	Fig23−6	Fusing Cooling Fan - Right Rear	2-B3
FAN19	Fig23−7	Duplex Lower Cooling Fan - Front	2-G1
FAN20	Fig23−8	Laser Cooling Fan	1-F10
FAN21	Fig23−9	Right Intake Fan - Front	1-G8
FAN22	Fig23−10	Right Intake Fan - Center	1-G8
FAN23	Fig23−11	Ozone Intake Fan	1-E9
FAN24	Fig23−12	Right Intake Fan - Rear	1-F8
FAN25	Fig23−13	Fusing Cooling Fan - Right Rear	2-B4
FAN26	Fig23−14	Ozone Vent Fan	1-B4
FAN27	Fig23−15	PTR Cooling Fan - Rear	2-F9
FAN28	Fig23−16	Fusing Transport Exhaust Fan	2-B5
FAN29	Fig23−17	Fusing Exhaust Fan - Upper	2-B4
FAN30	Fig23−18	Fusing Exhaust Fan Lower	2-B4
FAN31	Fig8−4	ID Sensor Fan	3-G10
FAN32	Fig24−1	Development Cooling - Front	1-A2
FAN33	Fig24−3	Belt Cooling	1-B2
FAN34	Fig24−2	Development Cooling - Rear	1-B3
Symbol	**Index No.**	**Description**	**P to P**
Others			
Other1	Fig3−7	Anti-condensation Heater	1-B10
Other2	Fig8−3	Thermostats	3-E10
Other3	Fig8−8	ITB Unit Heater	3-E10
Other4	Fig9−4	Heating Roller Thermostat (Rear)	3-G6
Other5	Fig9−7	Heating Roller Thermostat (Center)	3-H6
Other6	Fig9−10	Fusing Heat Thermistor (Rear)	3-G7
Other7	Fig9−11	Heating Roller Lamps (1090/1000 W)	3-G6
Other8	Fig9−12	Heating Roller Lamps (1150/900 W)	3-G6
Other9	Fig9−13	Pressure Roller Fusing Lamp	3-G5
Other10	Fig9−19	Pressure Roller Thermostat	3-G8
Other11	Fig9−22	Pressure Roller Thermistor	3-G8
Other12	Fig18−11	Paper Bank Heater - Lower	1-F6
Other13	Fig18−12	Paper Bank Heater - Upper	1-F6
Other14	Fig19−1	Operation Panel	4-B3
Other15	Fig19−2	Status Light	4-A3
Other16	Fig19−8	Purge Path	1-H6
Symbol	**Index No.**	**Description**	**P to P**
PCBs			
PCB1	Fig2−1	PWB URB DF	DF-F10
PCB2	Fig2−2	Main Board	DF-B9
PCB3	Fig2−7	CIS	2-B11
PCB4	Fig3−2	SIO	4-B5
PCB5	Fig3−3	IDB	4-B5
PCB6	Fig3−8	SBU	4-B5
PCB7	Fig4−1	LD Board	4-B7
PCB8	Fig4−4	Polygon Mirror Motor PCB	4-B8
PCB9	Fig8−2	Transfer Power Pack	3-E10
PCB10	Fig8−9	TDRB (Transfer Drive Relay Board)	3-F10
PCB11	Fig15−2	PSU-A	4-G4
PCB12	Fig15−3	PSU-B	4-G4
PCB13	Fig15−5	HDD	4-D1
PCB14	Fig15−7	Controller Board	4-D1
PCB15	Fig15−8	IPU Sub Board	4-D4
PCB16	Fig15−9	IPU Main Board	4-D3
PCB17	Fig15−10	CNB	4-E4
PCB18	Fig15−11	BCU	4-E3
PCB19	Fig15−16	PSU-C	4-G5
PCB20	Fig19−3	IOB	1-D6
PCB21	Fig19−4	Charge, Grid, Bias Power Pack (CGB)	1-A3
PCB22	Fig19−5	RYB	3-C5
PCB23	Fig19−7	EDRB	2-D4
PCB24	Fig19−9	AC Drive Board	1-G5
PCB25	Fig20−4	CRB	2-B11
PCB26	Fig20−5	DRB	2-D8

D179/D180/D181 ELECTRICAL COMPONENT LAYOUT

PCB27	Fig20−12	CIS	2-B11
PCB28	Fig4−2	Laser Synchronization Detection Board (Trailing Edge)	4-A7
PCB29	Fig4−5	Laser Synchronization Detection Board (Leading Edge)	4-A7
PCB30	Fig21−3	Double-Feed Sensor (Emitter)	2-G11
PCB31	Fig21−6	Double-Feed Sensor (Receptor)	2-G11

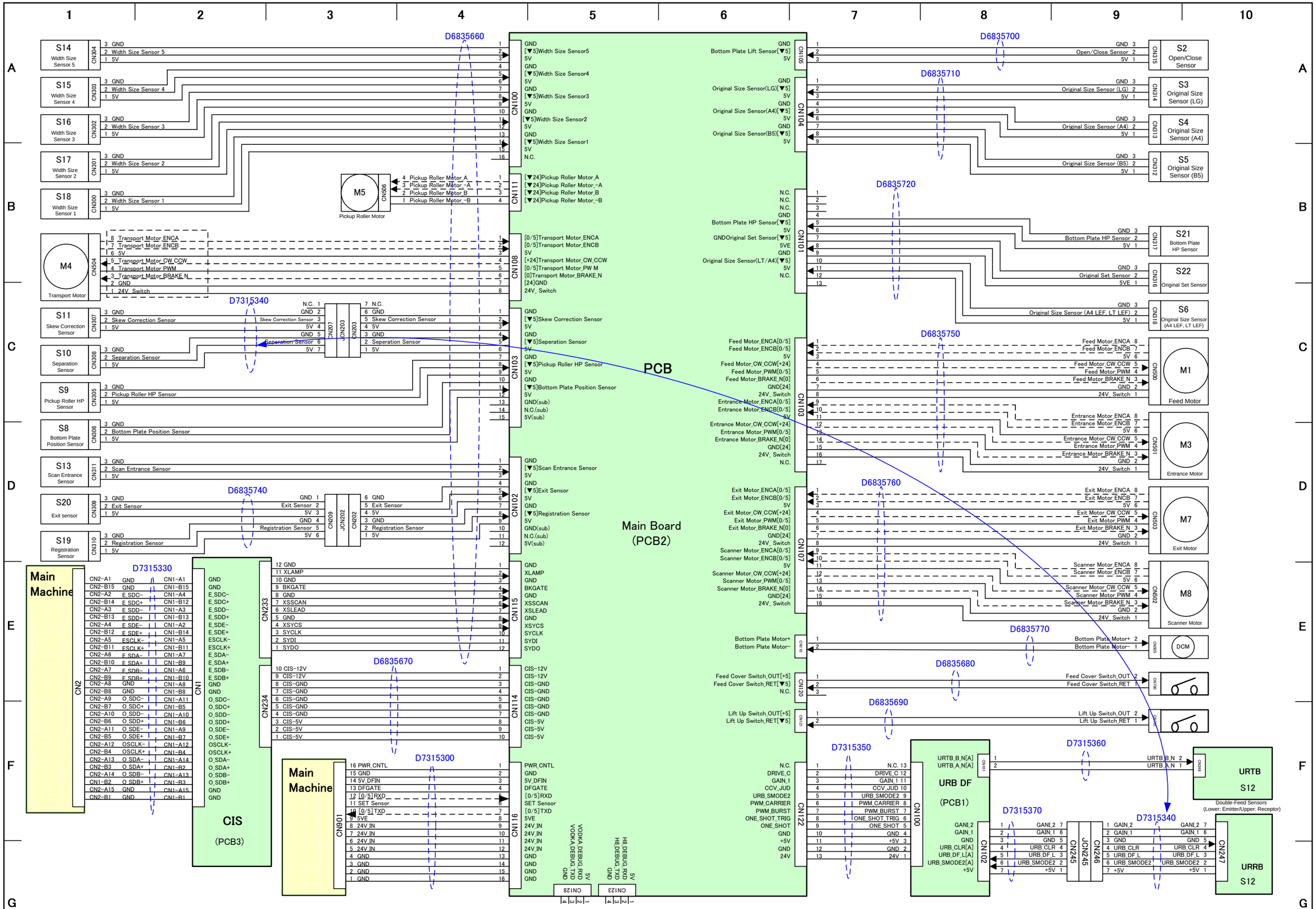

D731 POINT TO POINT DIAGRAM

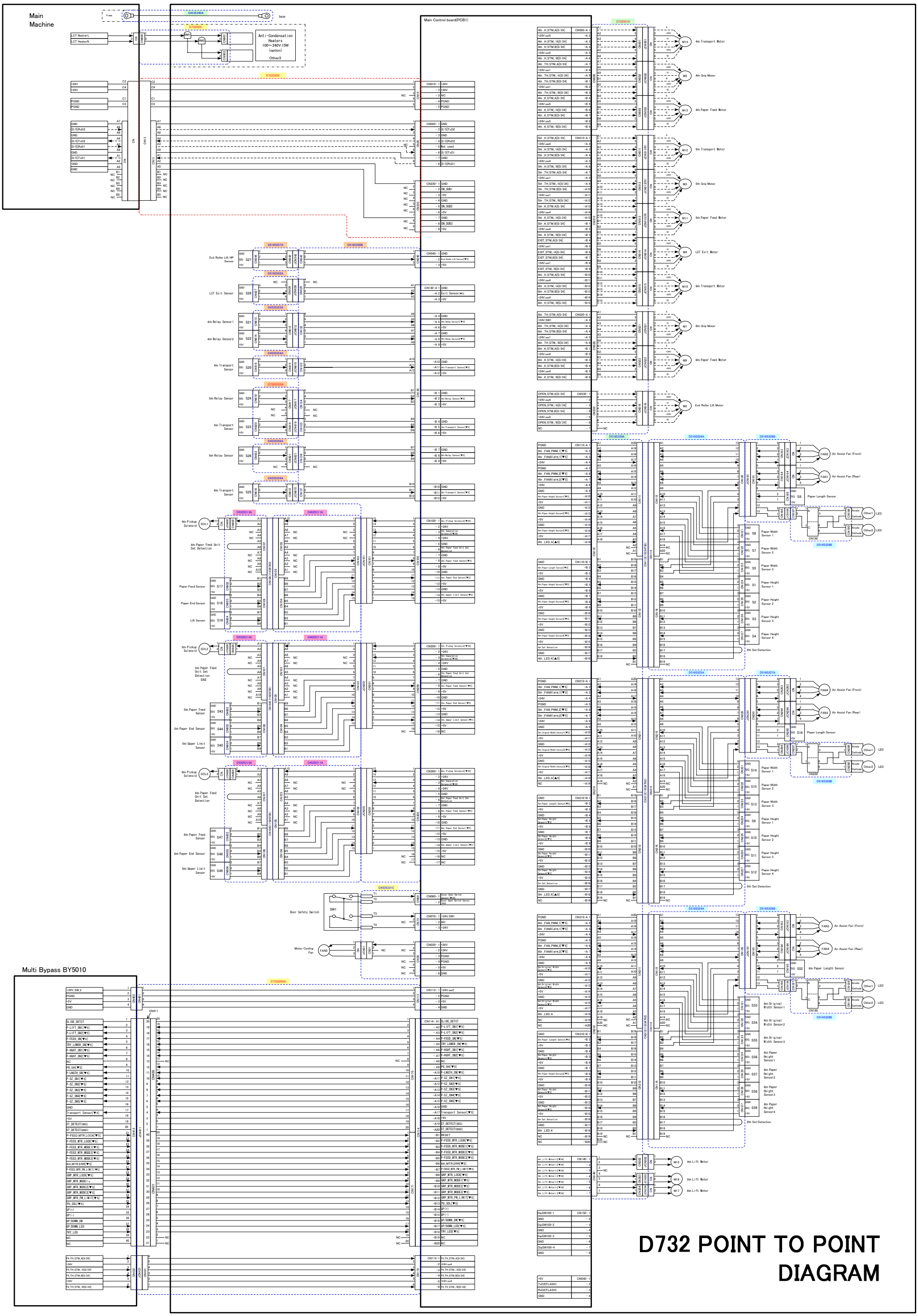
Main Machine
Main Control board(PCB1)
Anti-Condensation Heaters 100~240V:15W (option)
Other3
Multi Bypass BY5010
Exit Roller Lift HP Sensor
LCT Exit Sensor
4th Relay Sensor1
4th Relay Sensor2
4th Transport Sensor
5th Relay Sensor
5th Transport Sensor
6th Relay Sensor
6th Transport Sensor
4th Pickup Solenoid
4th Paper Feed Unit Set Detection
Paper Feed Sensor
Paper End Sensor
Lift Sensor
5th Pickup Solenoid
5th Paper Feed Unit Set Detection S42
5th Paper Feed Sensor
5th Paper End Sensor
5th Upper Limit Sensor
6th Pickup Solenoid
6th Paper Feed Unit Set Detection
6th Paper Feed Sensor
6th Paper End Sensor
6th Upper Limit Sensor
Door Safety Switch
Motor Cooling Fan
4th Transport Motor
4th Grip Motor
4th Paper Feed Motor
5th Transport Motor
5th Grip Motor
5th Paper Feed Motor
LCT Exit Motor
6th Transport Motor
6th Grip Motor
6th Paper Feed Motor
Exit Roller Lift Motor
Air Assist Fan (Front)
Air Assist Fan (Rear)
Paper Length Sensor
Paper Width Sensor 1
Paper Width Sensor 2
Paper Width Sensor 3
Paper Height Sensor 1
Paper Height Sensor 2
Paper Height Sensor 3
Paper Height Sensor 4
4th Set Detection
5th Set Detection
6th Set Detection
4th Lift Motor
5th Lift Motor
6th Lift Motor
D732 POINT TO POINT DIAGRAM

D732 ELECTRICAL COMPONENT LAYOUT

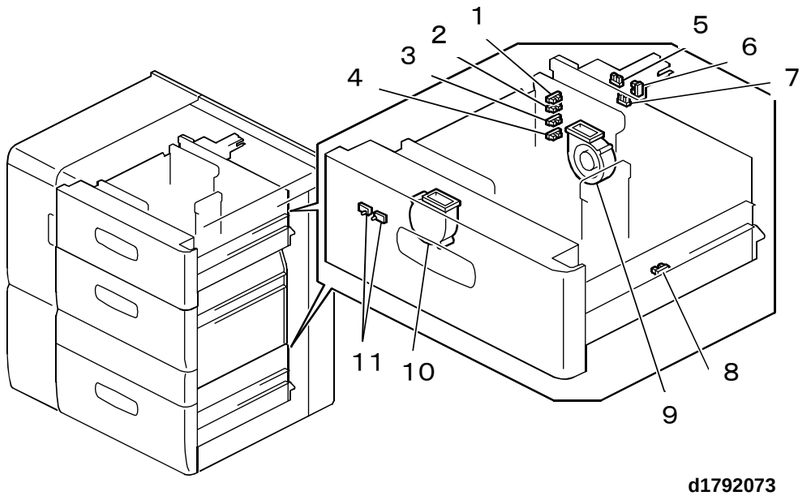

d1792073

Fig1

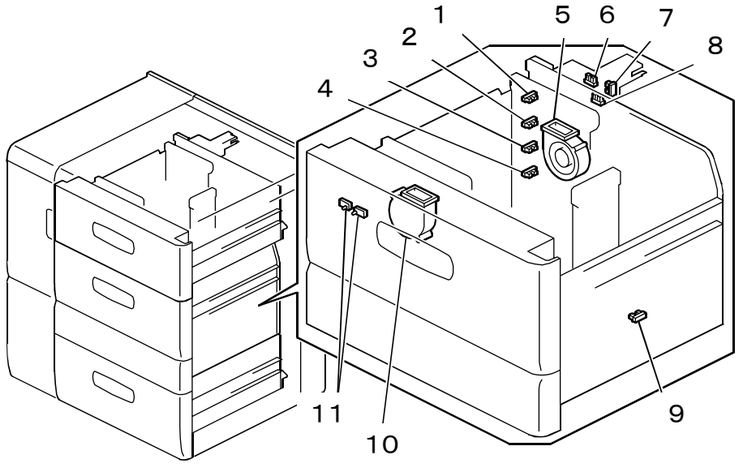

d1792076

Fig2

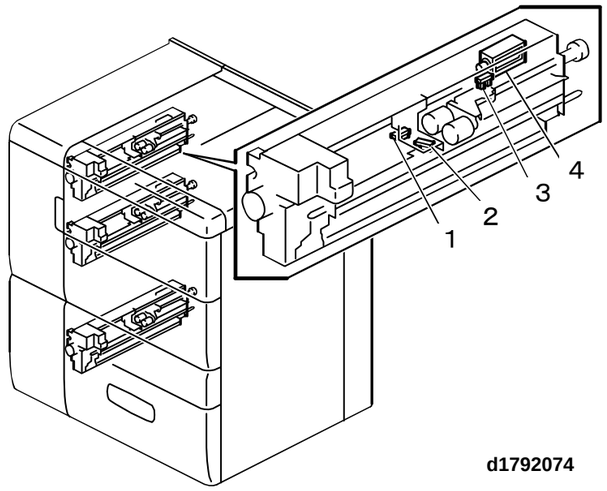

d1792074

Fig3

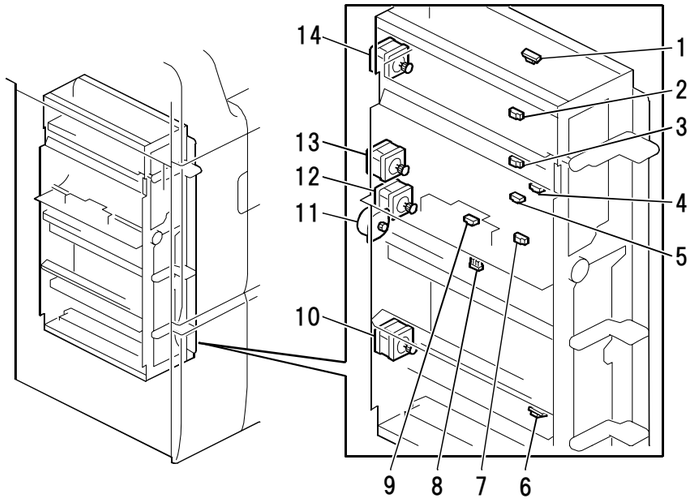

Fig4

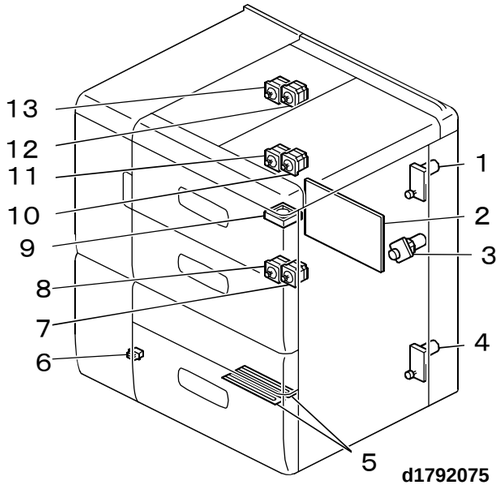

d1792075

Fig5

Symbol	Index No.	Description	P to P
Motors			
M1	Fig4−10	6th Grip Motor	B8
M2	Fig4−11	Exit Roller Lift Motor	B8
M3	Fig4−12	5th Grip Motor	B8
M4	Fig4−13	LCT Exit Motor	B8
M5	Fig4−14	4th Grip Motor	A8
M6	Fig5−1	4th Lift Motor	G8
M7	Fig5−3	5th Lift Motor	G8
M8	Fig5−4	6th Lift Motor	G8
M9	Fig5−7	6th Paper Feed Motor	C8
M10	Fig5−8	6th Transport Motor	C8
M11	Fig5−10	5th Paper Feed Motor	B8
M12	Fig5−11	5th Transport Motor	B8
M13	Fig5−12	4th Paper Feed Motor	A8
M14	Fig5−13	4th Transport Motor	A8
Symbol	**Index No.**	**Description**	**P to P**
Sensors			
S1	Fig1−1	Paper Height Sensor 1	D9
S2	Fig1−2	Paper Height Sensor 2	D9
S3	Fig1−3	Paper Height Sensor 3	D9
S4	Fig1−4	Paper Height Sensor 4	D9
S5	Fig1−5	Paper Width Sensor 3	E9
S6	Fig1−6	Paper Width Sensor 1	E9
S7	Fig1−7	Paper Width Sensor 2	E9
S8	Fig1−8	Paper Length Sensor	C9
S9	Fig2−1	Paper Height Sensor 1	E9
S10	Fig2−2	Paper Height Sensor 2	E9
S11	Fig2−3	Paper Height Sensor 3	E9
S12	Fig2−4	Paper Height Sensor 4	E9
S13	Fig2−6	Paper Width Sensor 3	E9
S14	Fig2−7	Paper Width Sensor 1	E9
S15	Fig2−8	Paper Width Sensor 2	E9
S16	Fig2−9	Paper Length Sensor	D9
S17	Fig3−1	Paper Feed Sensor	D3
S18	Fig3−2	Paper End Sensor	D3
S19	Fig3−3	Lift Sensor	D3
S20	Fig4−1	4th Transport Sensor	B3
S21	Fig4−2	4th Relay Sensor 1 (Upper)	B3
S22	Fig4−3	4th Relay Sensor 2 (Lower)	B3
S23	Fig4−4	5th Transport Sensor	C3
S24	Fig4−5	5th Relay Sensor	C3
S25	Fig4−6	6th Transport Sensor	C3
S26	Fig4−7	6th Relays Sensor	C3
S27	Fig4−8	Exit Roller Lift HP Sensor	B3
S28	Fig4−9	LCT Exit Sensor	B3
Symbol	**Index No.**	**Description**	**P to P**
Switches			
SW1	Fig5−6	Door Safety Switch	E4
Symbol	**Index No.**	**Description**	**P to P**
Solenoids			
SOL1	Fig3−4	Pick-up Solenoid	C3
Symbol	**Index No.**	**Description**	**P to P**
FANs			
FAN1	Fig1−9	Air Assist Fan (Rear)	C7
FAN2	Fig1−10	Air Assist Fan (Front)	C7
FAN3	Fig2−5	Air Assist Fan (Rear)	D9
FAN4	Fig2−10	Air Assist Fan (Front)	D9
FAN5	Fig5−9	Motor Cooling Fan	C9
Symbol	**Index No.**	**Description**	**P to P**
Others			
Other1	Fig1−11	LED	C9
Other2	Fig2−11	LED	E9
Other3	Fig5−5	Anti-condensation Heater	A4
Symbol	**Index No.**	**Description**	**P to P**
PCBs			
PCB1	Fig5−2	Main Control board	G6

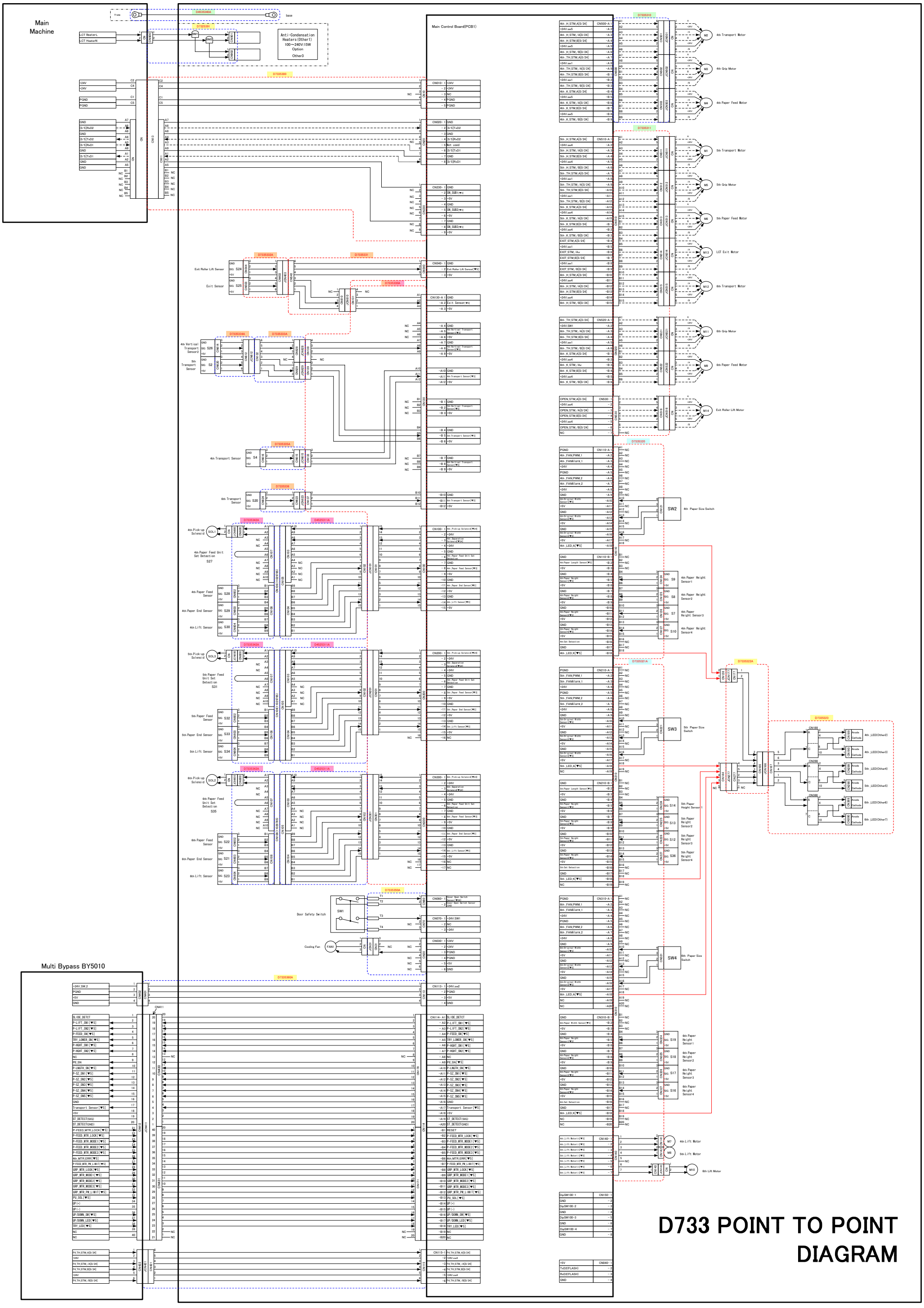

D733 POINT TO POINT DIAGRAM

D733 ELECTRICAL COMPONENT LAYOUT

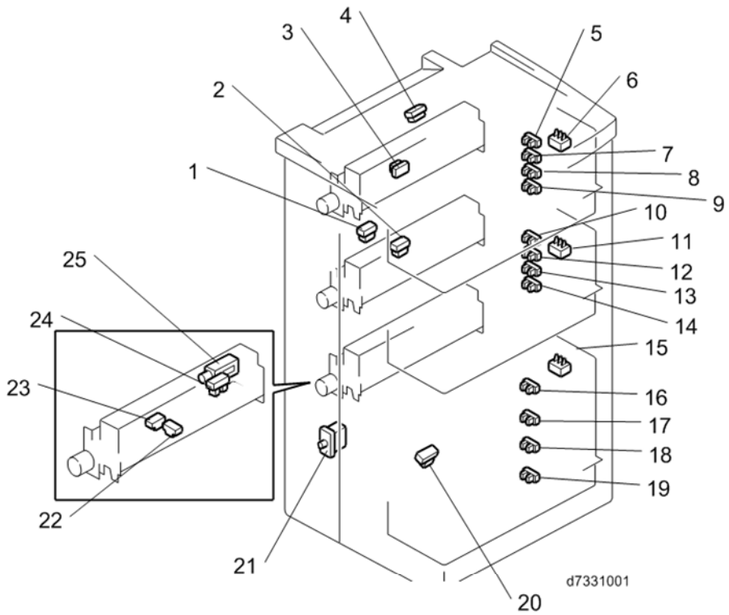

Fig1

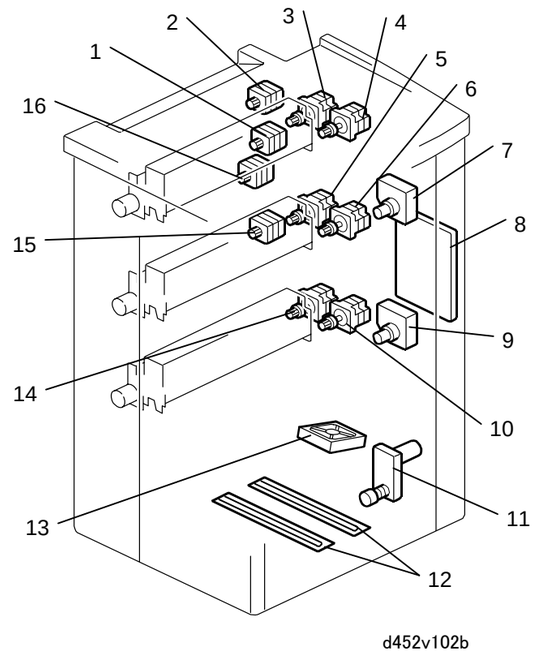

Fig2

Symbol	Index No.	Description	P to P
Motors			
M1	Fig2－1	5th Transport Motor	B8
M2	Fig2－2	4th Transport Motor	A8
M3	Fig2－3	4th Grip Motor	A8
M4	Fig2－4	4th Paper Feed Motor	A8
M5	Fig2－5	5th Grip Motor	B8
M6	Fig2－6	5th Paper Feed Motor	B8
M7	Fig2－7	4th Lift Motor	G8
M8	Fig2－9	5th Lift Motor	G8
M9	Fig2－10	6th Paper Feed Motor	B8
M10	Fig2－11	6th Lift Motor	G8
M11	Fig2－14	6th Grip Motor	B8
M12	Fig2－15	6th Transport Motor	C8
M13	Fig2－16	LCT Exit Motor	B8
Symbol	**Index No.**	**Description**	**P to P**
Sensors			
S1	Fig1－1	Pressure Release HP sensor	
S2	Fig1－2	5th Transport Sensor	B4
S3	Fig1－3	4th Relay Sensor	B4
S4	Fig1－4	4th Transport Sensor	B4
S5	Fig1－5	4th Paper Height Sensor	D9
S6	Fig1－6	4th Paper Size Sensors	D9
S7	Fig1－7	4th Paper Height Sensor 3	D8
S8	Fig1－8	4th Paper Height Sensor 2	D8
S9	Fig1－9	4th Paper Height Sensor 1	D8
S10	Fig1－10	5th Paper Height Sensor 4	D8
S11	Fig1－11	5th Paper Size Sensors	E9
S12	Fig1－12	5th Paper Height Sensor 3	E8
S13	Fig1－13	5th Paper Height Sensor 2	E8
S14	Fig1－14	5th Paper Height Sensor 1	E8
S15	Fig1－15	6th Paper Size Sensors	F7
S16	Fig1－16	6th Paper Height Sensor 4	F8
S17	Fig1－17	6th Paper Height Sensor 3	F8
S18	Fig1－18	6th Paper Height Sensor 2	F8
S19	Fig1－19	6th Paper Height Sensor 1	F8
S20	Fig1－20	6th Transport Sensor	C3
S21	Fig1－22	6th Paper End Sensor	E3
S22	Fig1－23	6th Paper Feed Sensor	E3
S23	Fig1－24	6th Lift Sensor	G8
Symbol	**Index No.**	**Description**	**P to P**
Switches			
SW1	Fig1－21	Door Safety Switch	E4
Symbol	**Index No.**	**Description**	**P to P**
Solenoids			
SOL1	Fig3－4	Pick-up Solenoid	C3
SOL2	Fig1－25	6th Pick-up Solenoid	E3
Symbol	**Index No.**	**Description**	**P to P**
FANs			
FAN1	Fig2－13	Cooling Fan	E7
Symbol	**Index No.**	**Description**	**P to P**
Others			
Other1	Fig2－12	Anti-Condensation Heaters	A4
Symbol	**Index No.**	**Description**	**P to P**
PCBs			
PCB1	Fig2－8	Main Control Board	G6

D734 POINT TO POINT DIAGRAM(1/3)

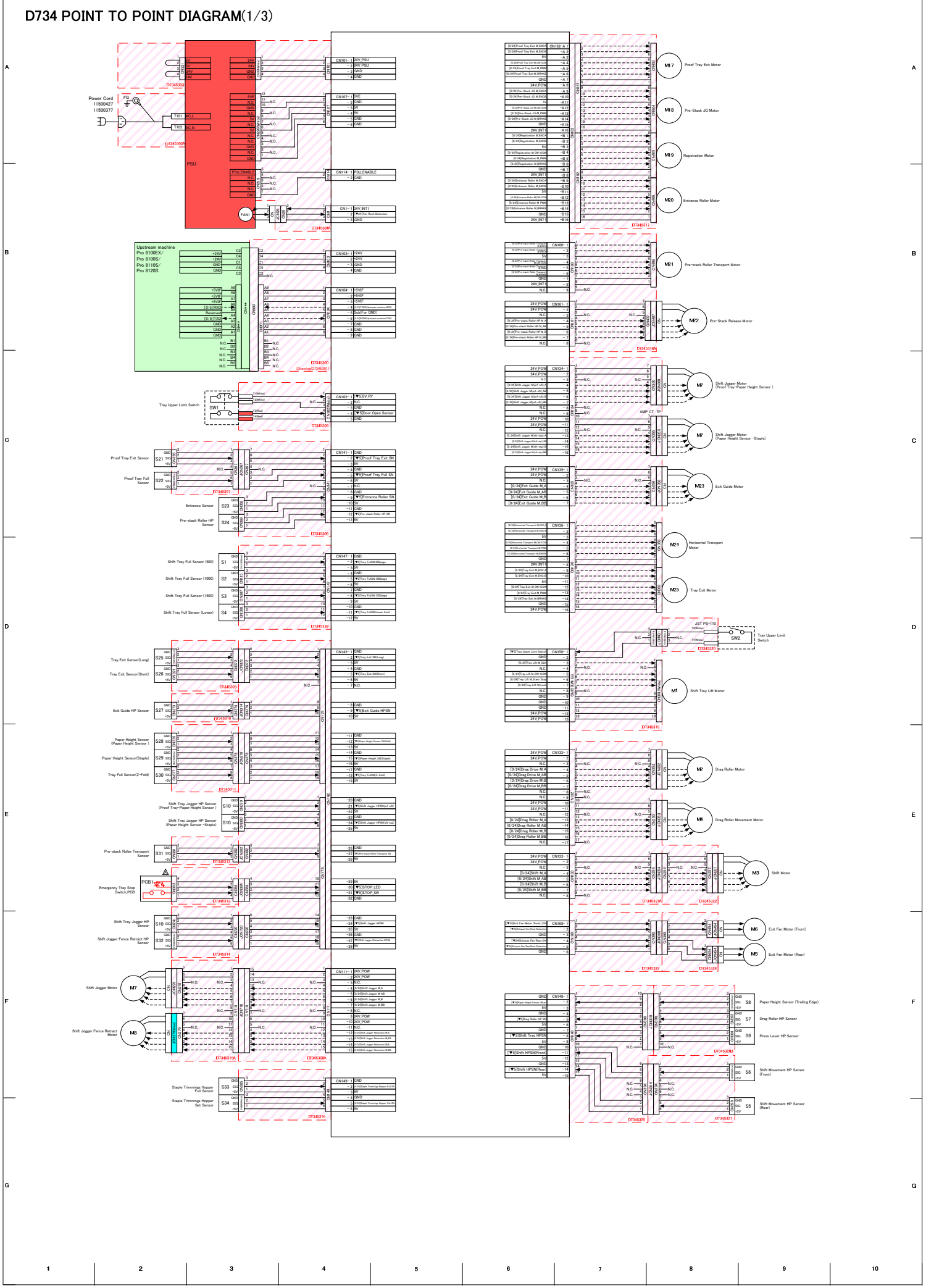

D734 POINT TO POINT DIAGRAM(2/3)

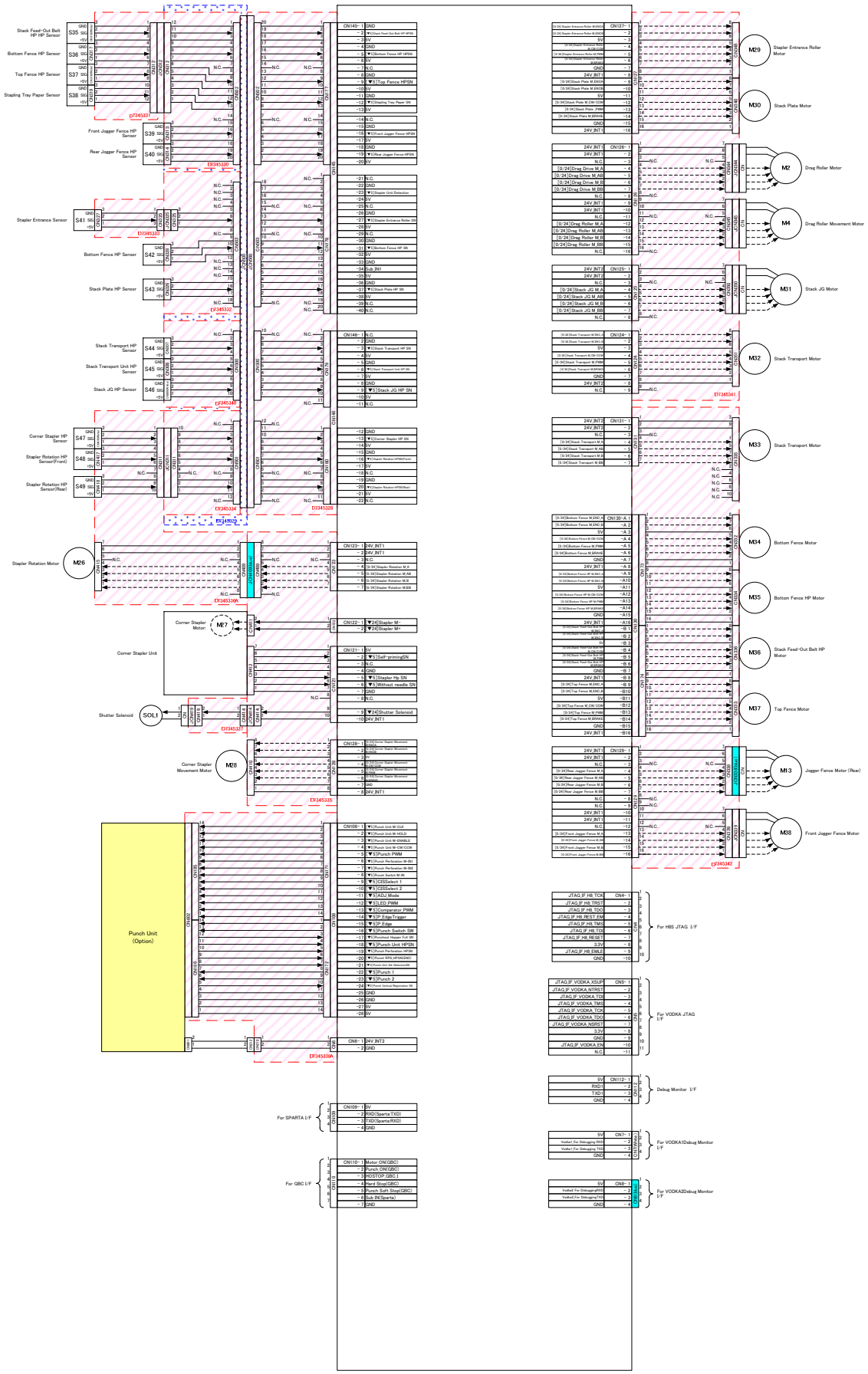

D734 POINT TO POINT DIAGRAM(3/3)

※Connectors of this sheet are only D734.

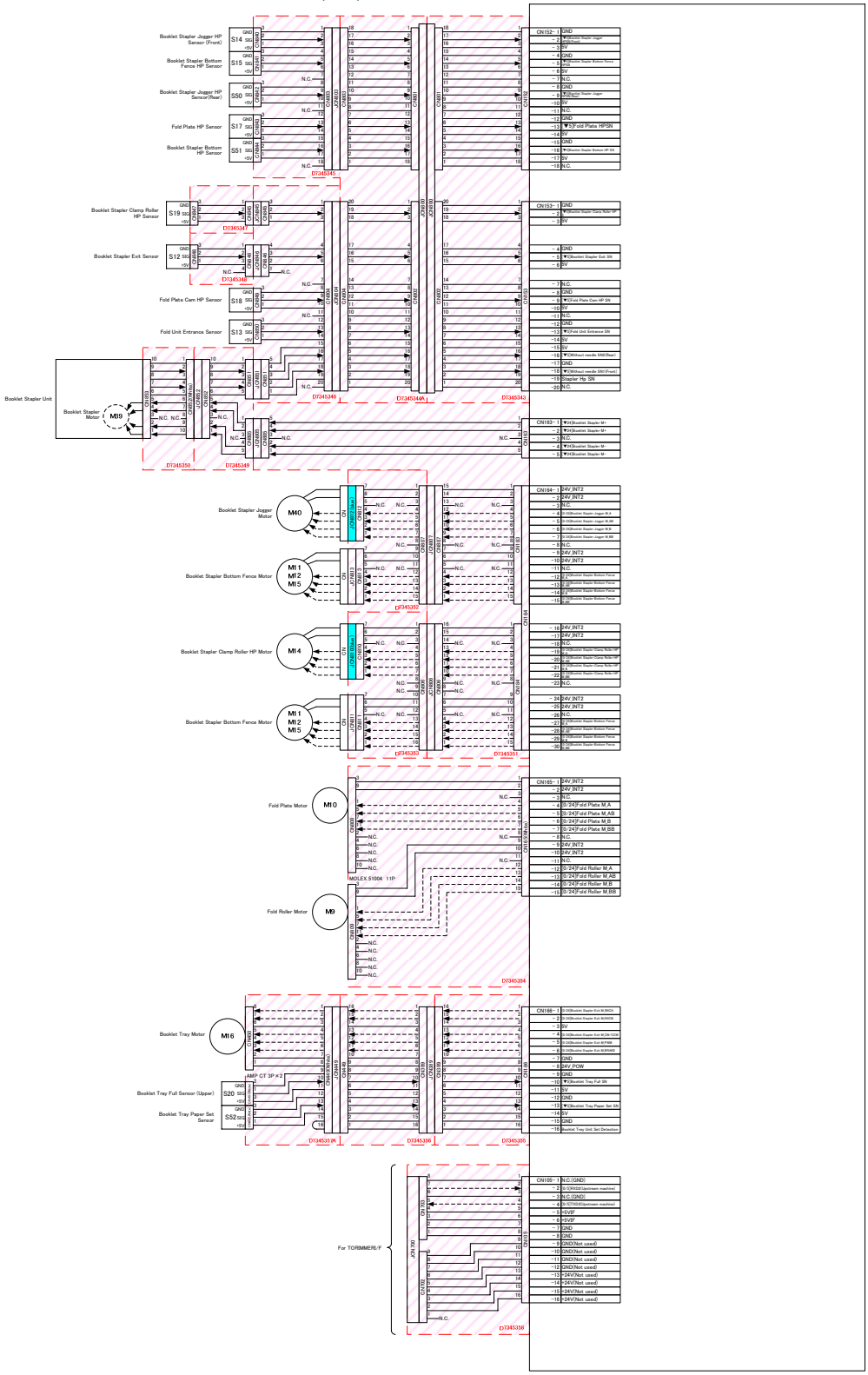

D735 POINT TO POINT DIAGRAM(1/2)

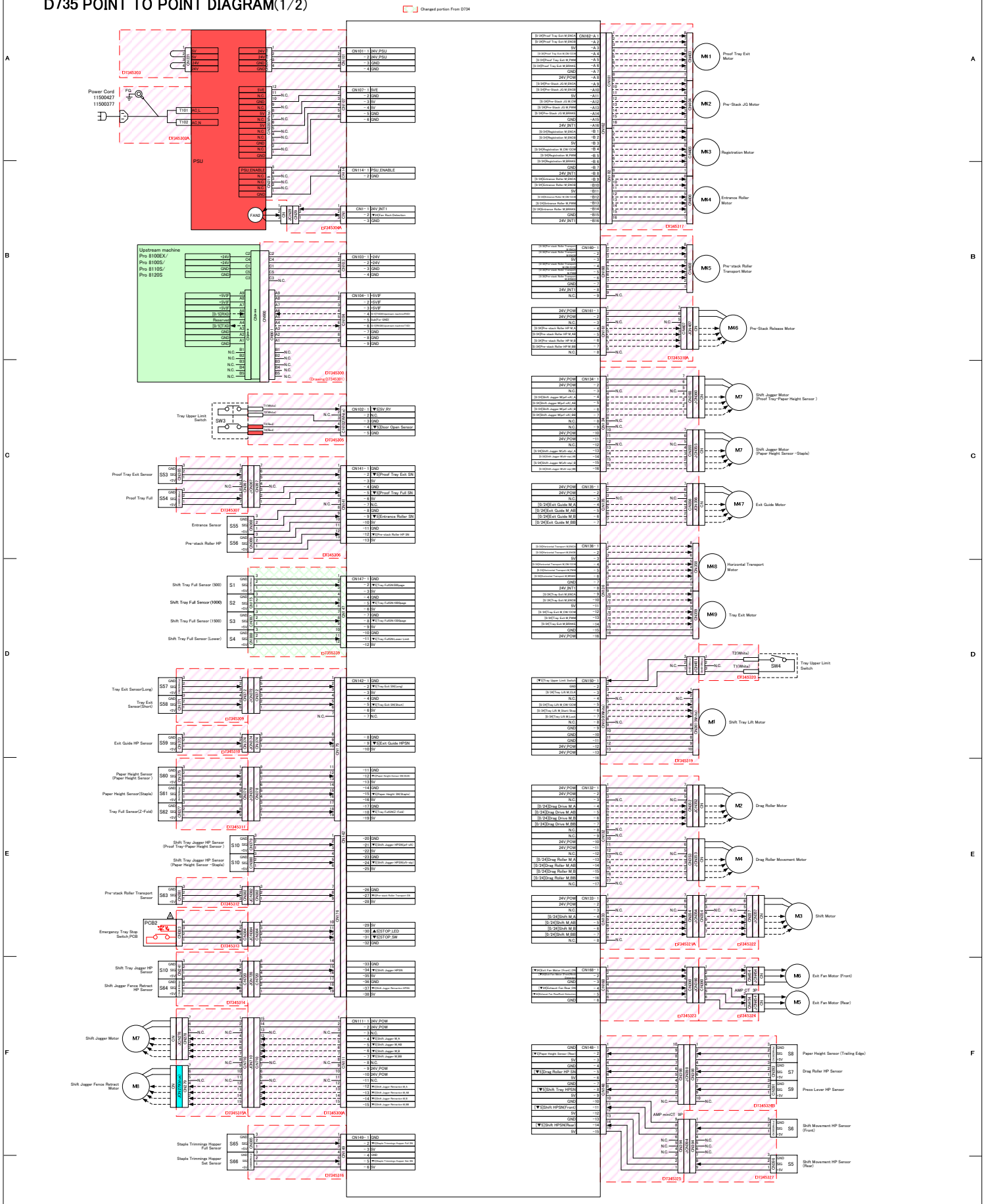

D735 POINT TO POINT DIAGRAM(2/2)

Changed portion From D734

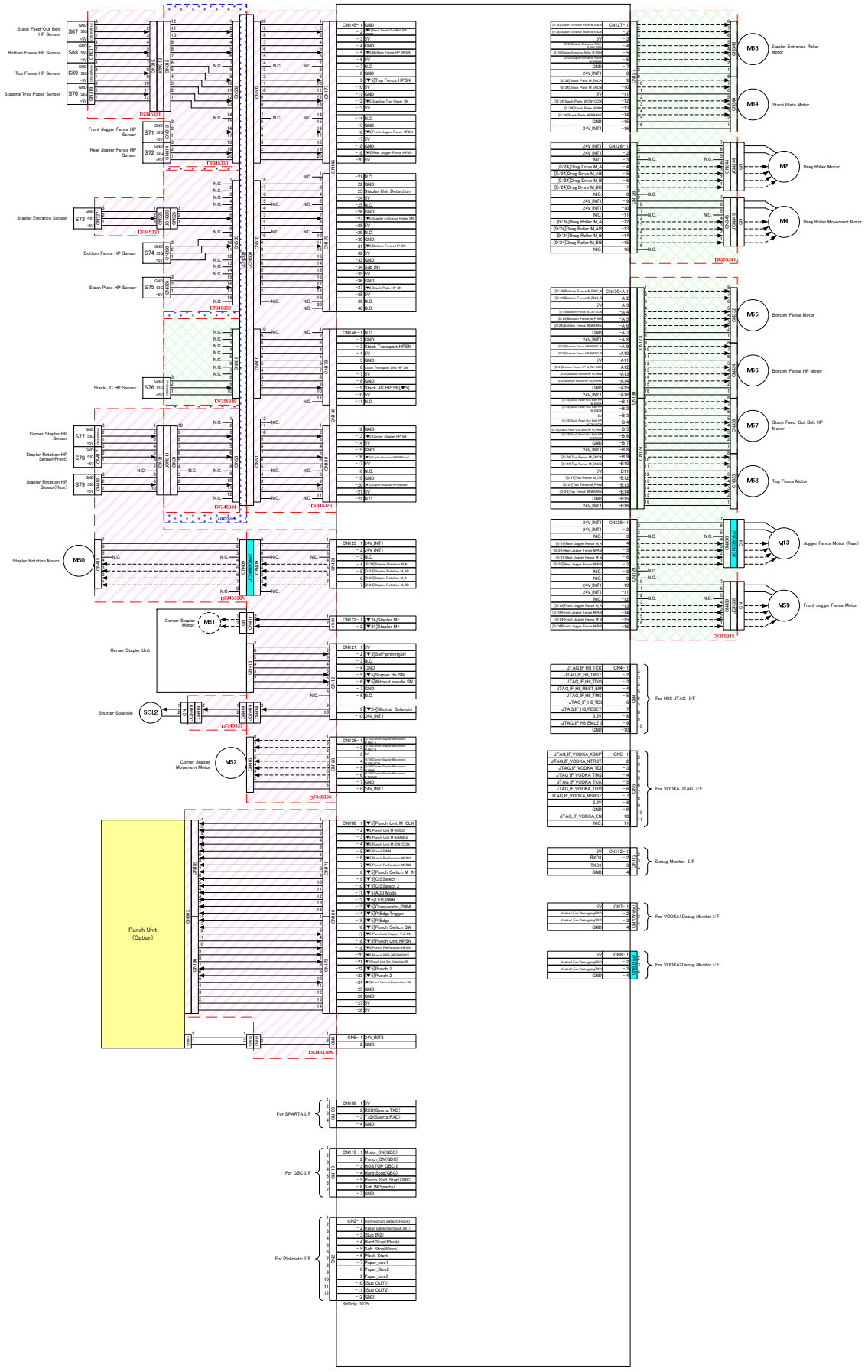

D734/D735 ELECTRICAL COMPONENT LAYOUT (1/2)

Fig.-1

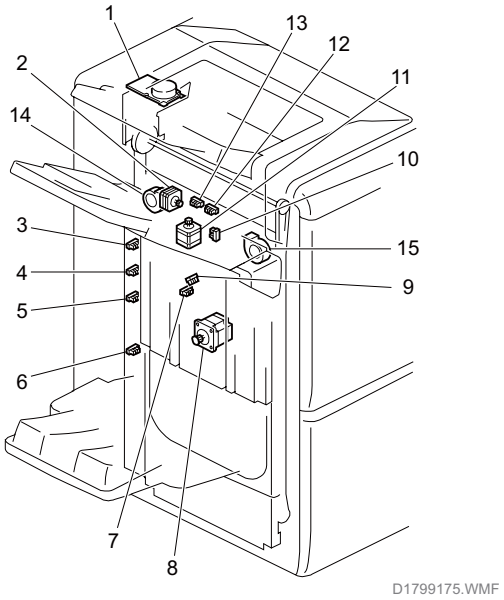

Fig.-2

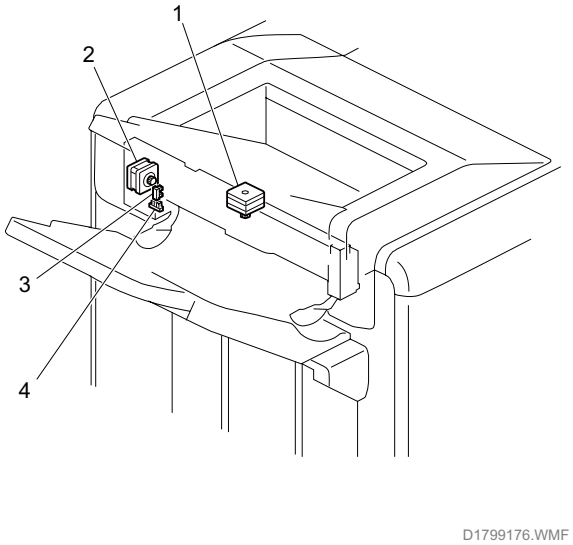

Fig.-3

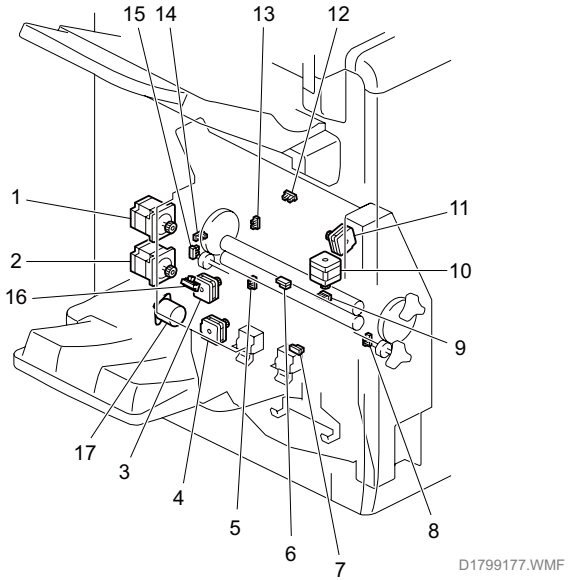

D734/D735 ELECTRICAL COMPONENT LAYOUT (2/2)

Symbol	Index No.	Description	P to P
Sensors			
S1	F1-3	Shift Tray Full Sensor (500)	1-D3 4-D3
S2	F1-4	Shift Tray Full Sensor (1000)	1-D3 4-D3
S3	F1-5	Shift Tray Full Sensor (1500)	1-D3 4-D3
S4	F1-6	Shift Tray Full Sensor (Lower)	1-D3 4-D3
S5	F1-7	Shift Movement HP Sensor (Rear)	1-G9 1-G9
S6	F1-9	Shift Movement HP Sensor (Front)	1-F9 4-F9
S7	F1-10	Drag Roller HP Sensor	1-F9 4-F9
S8	F1-12	Paper Height Sensor (Trailing Edge)	1-G9 4-G9
S9	F1-13	Press Lever HP Sensor	1-F9 4-F9
S10	F1-3	Shift Tray Jogger HP Sensor	1-E3 4-E3 4-F2
S11	F1-4	Shift Jogger Fence Retract HP Sensor	1-F2 4-F2
S12	F3-6	Booklet Stapler Exit Sensor	3-B2
S13	F3-7	Fold Unit Entrance Sensor	3-A2 3-B2
S14	F3-8	Booklet Stapler Jogger HP Sensor (Front)	3-A3
S15	F3-9	Booklet Stapler Bottom Fence HP Sensor	3-A3
S16	F3-12	Booklet Stapler Bottom Fence HP Sensor	3-C3
S17	F3-13	Fold Plate HP Sensor	3-A2
S18	F3-14	Fold Plate Cam HP Sensor	3-B2
S19	F3-15	Booklet Stapler Clamp Roller HP Sensor	3-B2
S20	F3-16	Booklet Tray Full Sensor (Upper)	3-E3

Index No.	Index No.	Description	P to P
Motors			
M1	F1-1	Shift Tray Lift Motor	1-D8 4-D8
M2	F1-2	Drag Roller Motor	1-E8 2-B8 3-E8 5-B8
M3	F1-8	Shift Motor	1-E9 4-E9
M4	F1-11	Drag Roller Movement Motor	1-E8 2-B8 4-E8 5-B8
M5	F1-13	Exit Fan Motor (Rear)	1-F9
M6	F1-14	Exit Fan Motor (Front)	1-F9 4-F9
M7	F2-1	Shift Jogger Motor	1-C8 1-F2 4-C8 4-F2
M8	F2-2	Shift Jogger Fence Retract Motor	4-F2
M9	F3-1	Fold Roller Motor	3-D3
M10	F3-2	Fold Plate Motor	3-D3
M11	F3-3	Booklet Stapler Bottom Fence Motor	3-C3 3-D3
M12	F3-4	Booklet Stapler Bottom Fence Motor	3-C3 3-D3
M13	F3-5	Jogger Fence Motor (Rear)	5-C8
M14	F3-10	Booklet Stapler Clamp Roller HP Motor	3-C3
M15	F3-11	Booklet Stapler Bottom Fence Motor	3-C3 3-D3
M16	F3-17	Booklet Tray Motor	3-E3

D736 POINT TO POINT DIAGRAM(1/11)

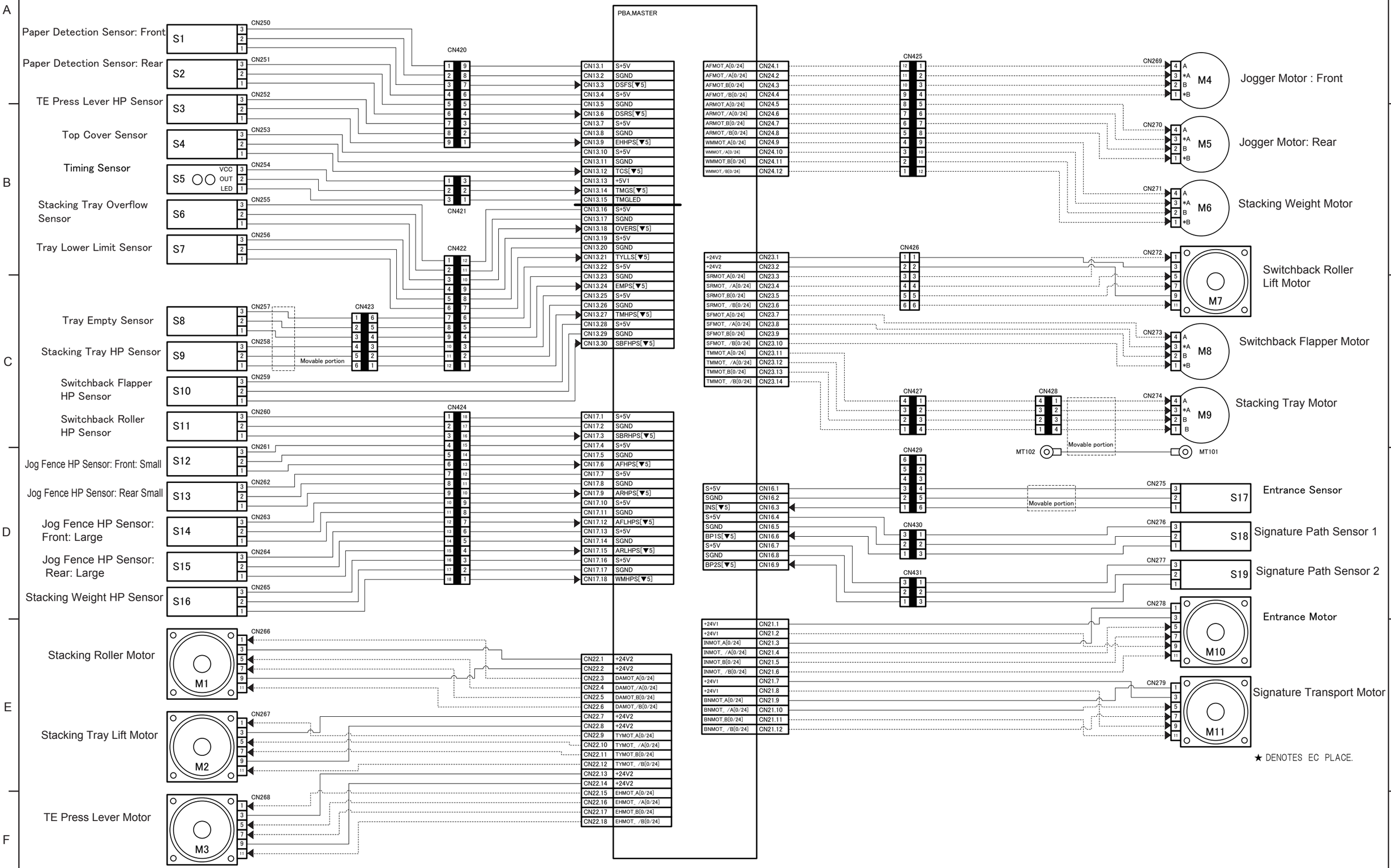

D736 POINT TO POINT DIAGRAM(2/11)

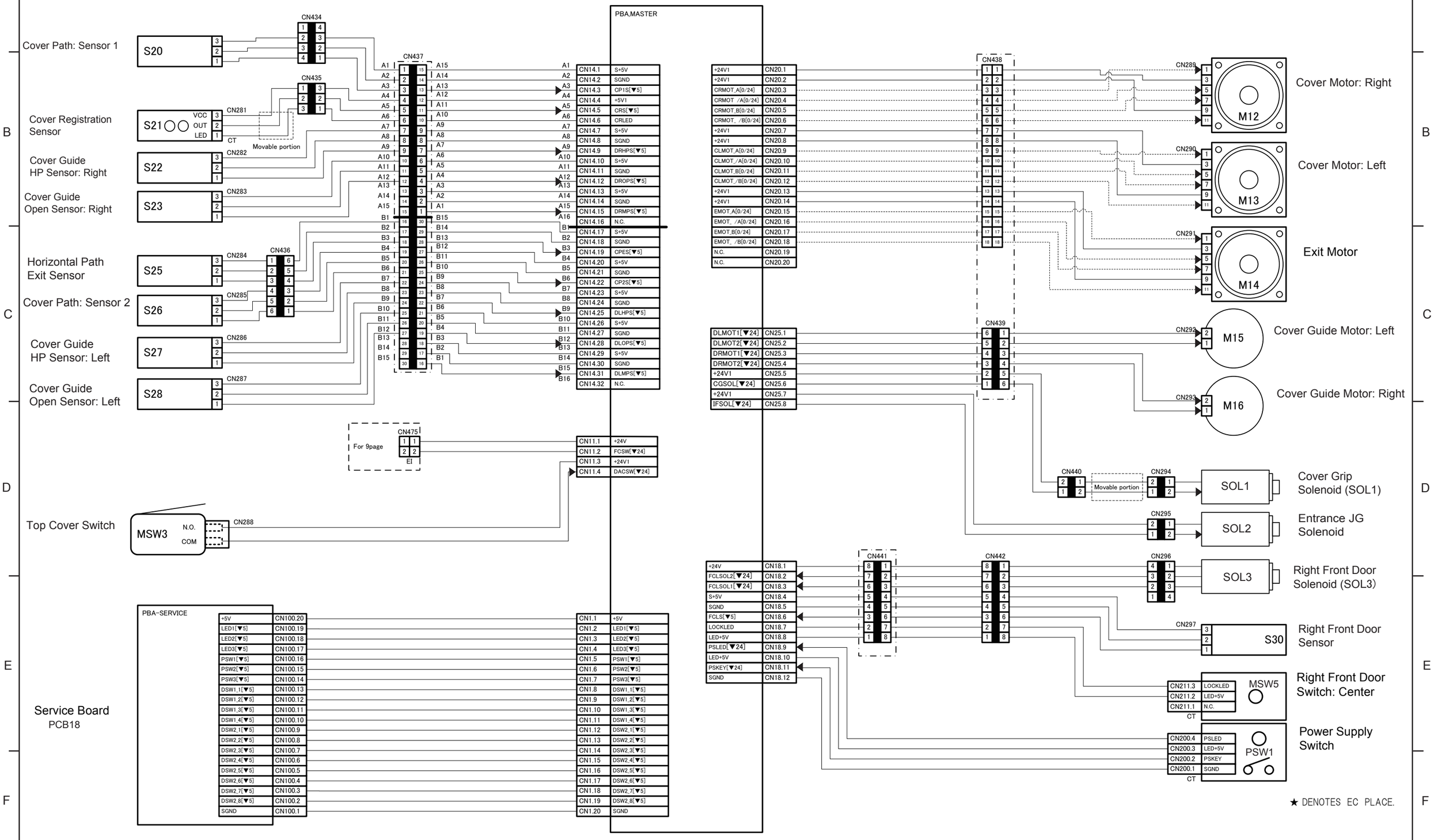

D736 POINT TO POINT DIAGRAM(3/11)

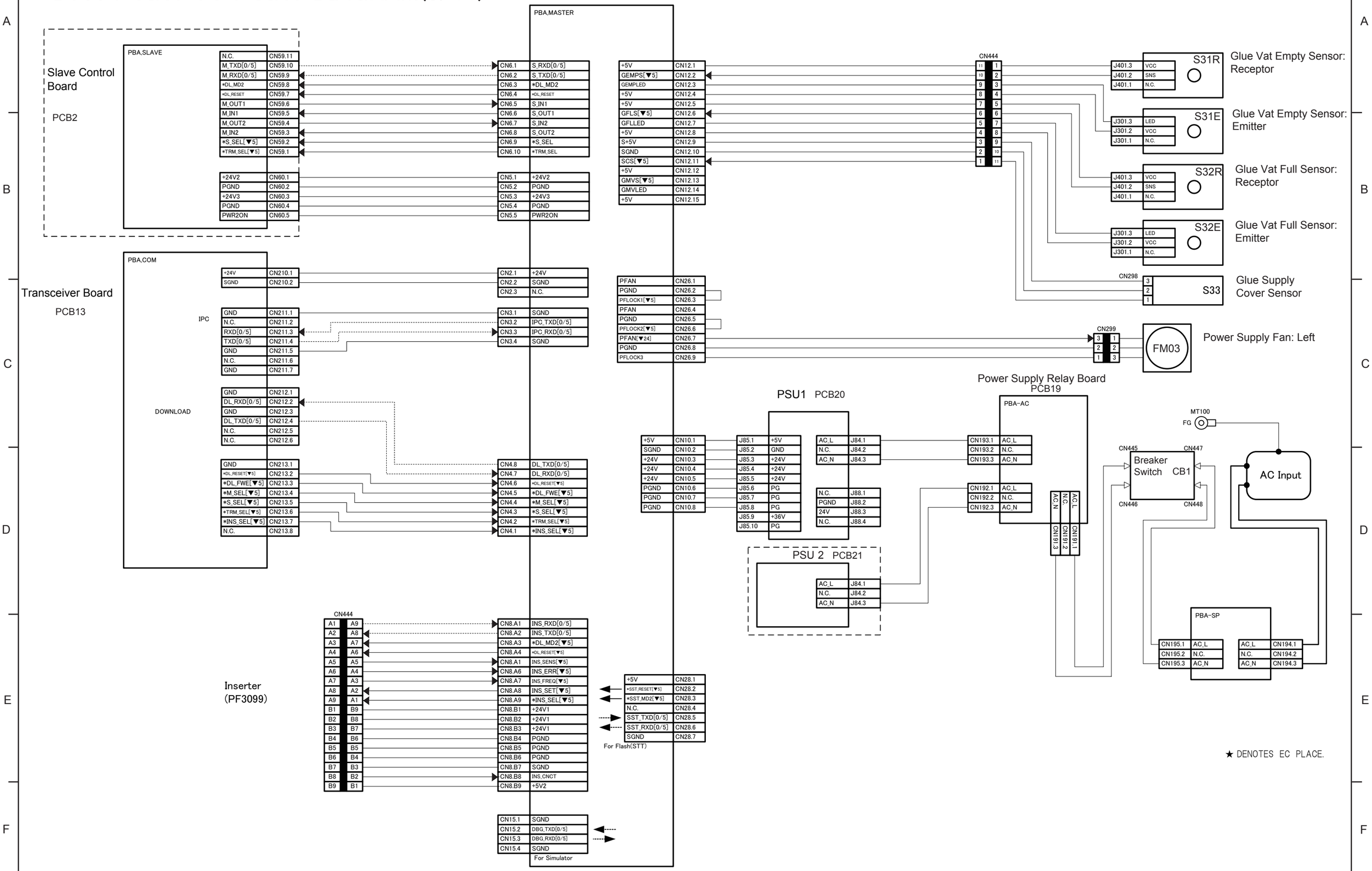

D736 POINT TO POINT DIAGRAM(4/11)

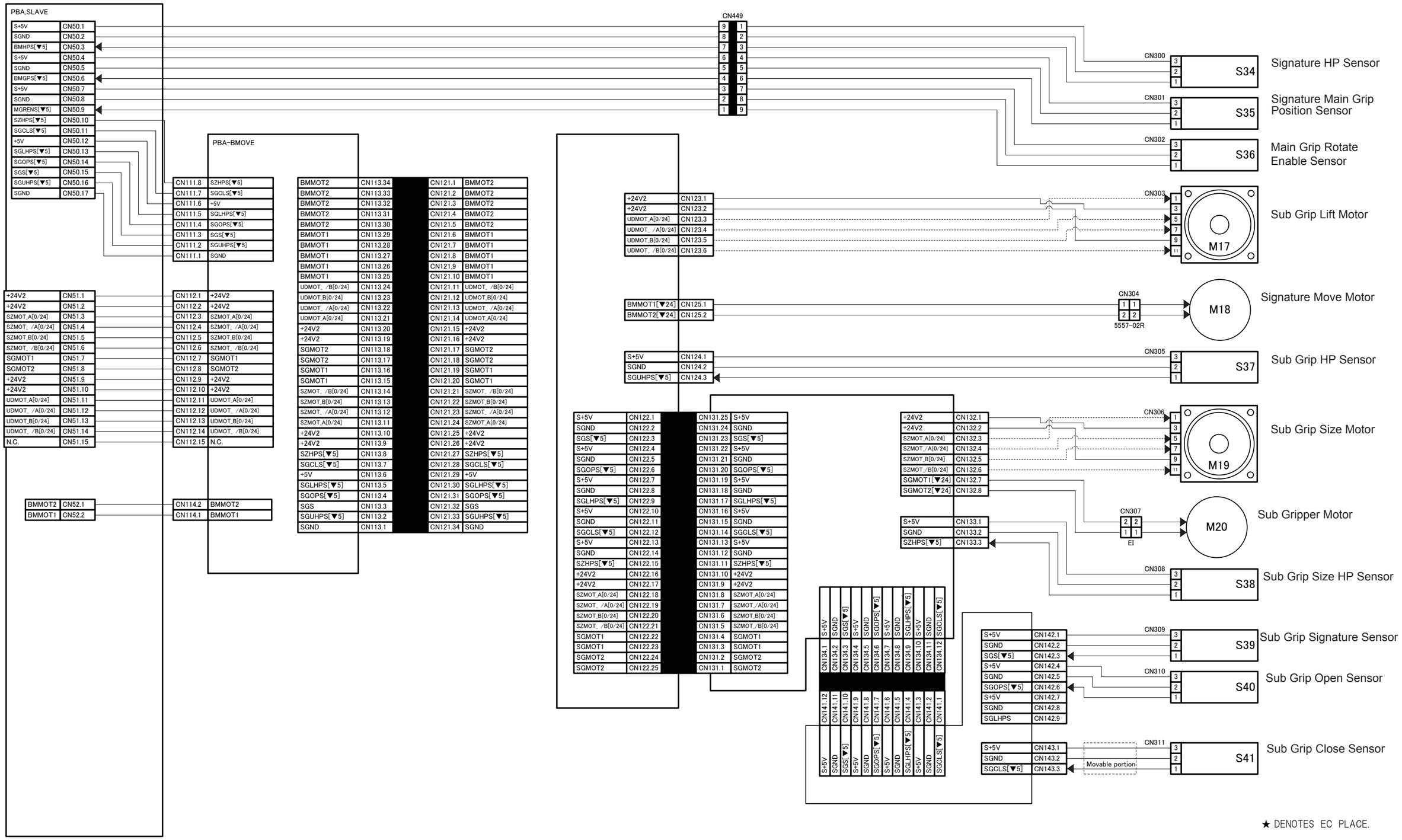

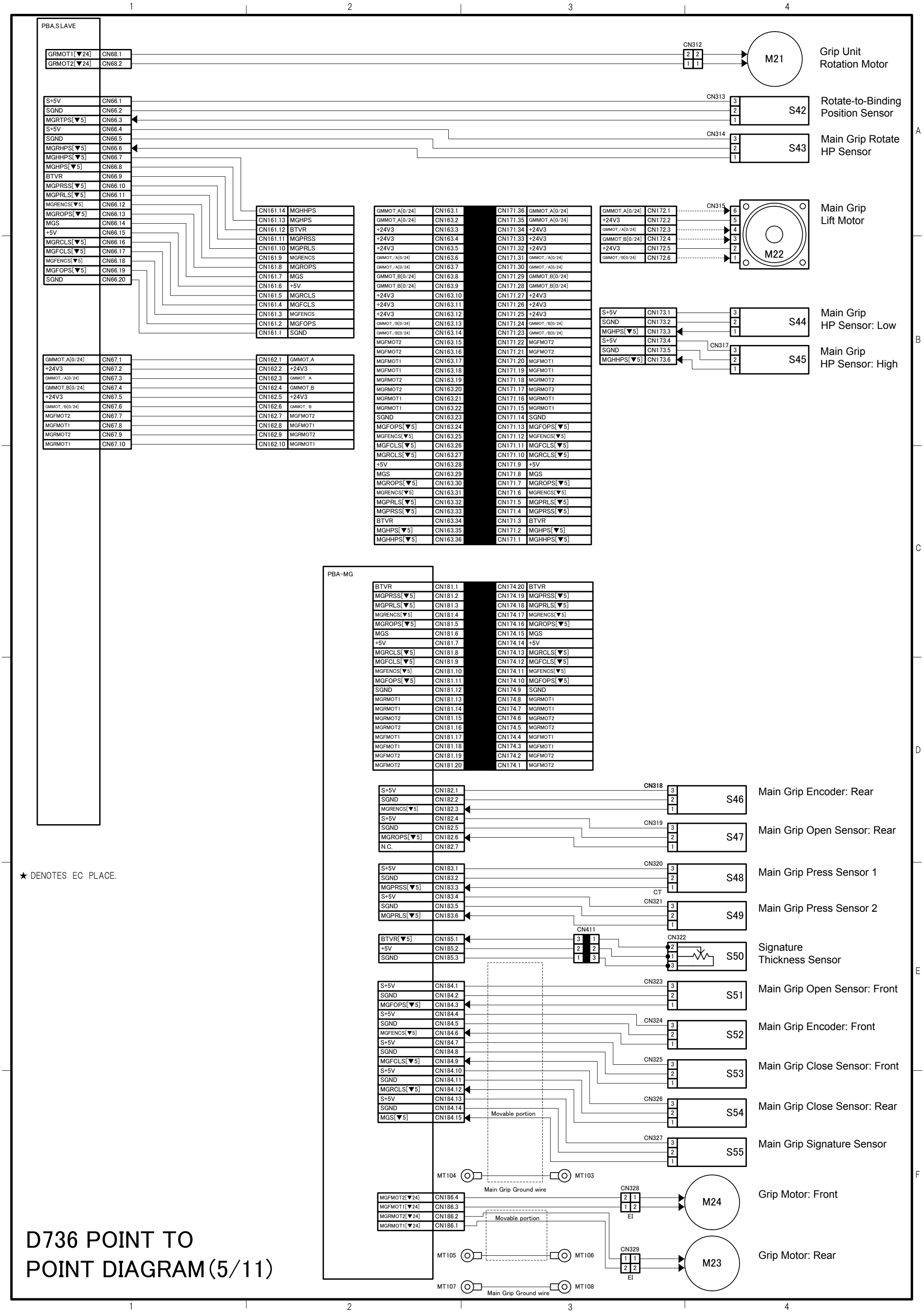

★ DENOTES EC PLACE.

D736 POINT TO POINT DIAGRAM(5/11)

D736 POINT TO POINT DIAGRAM(6/11)

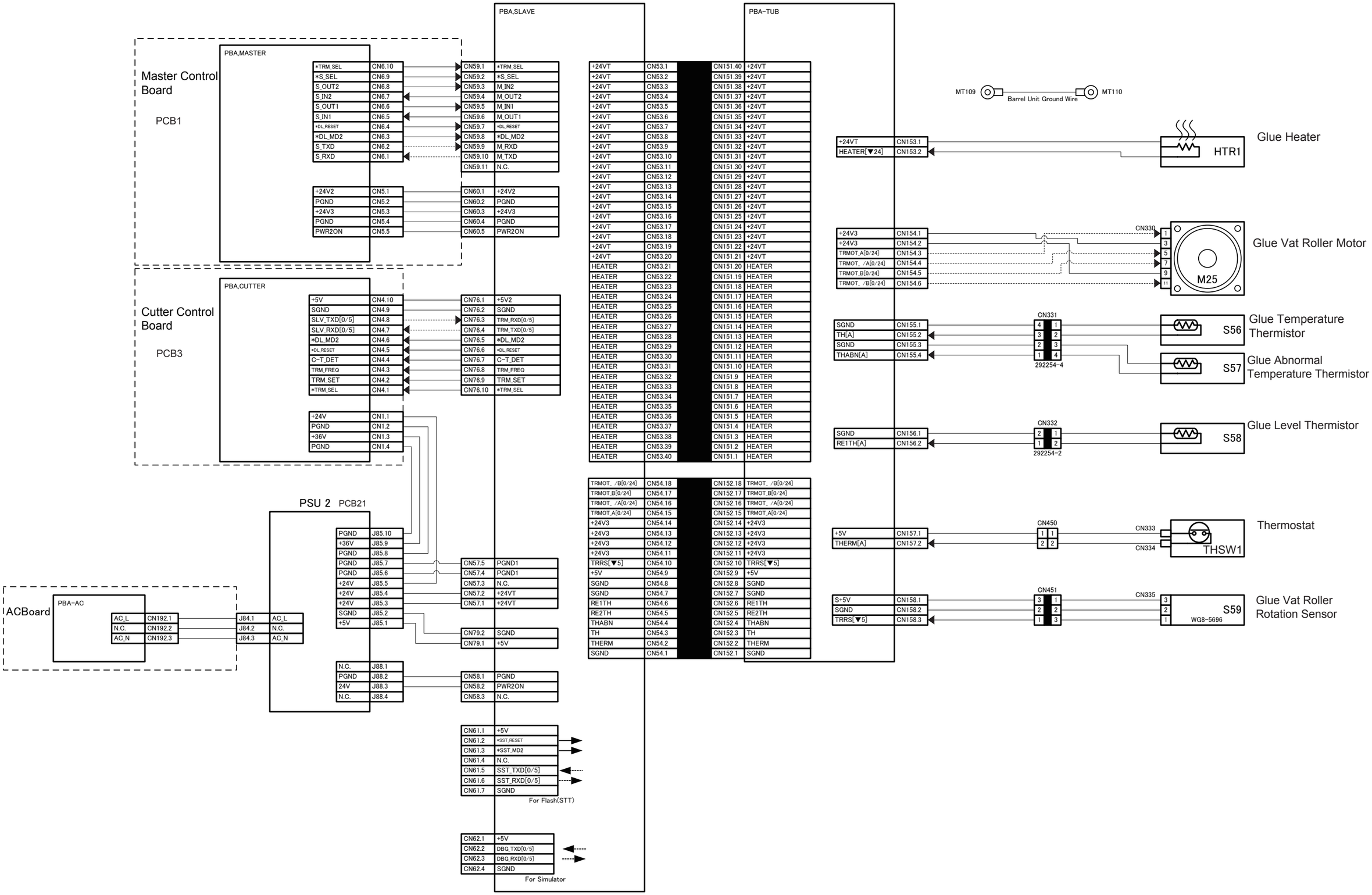

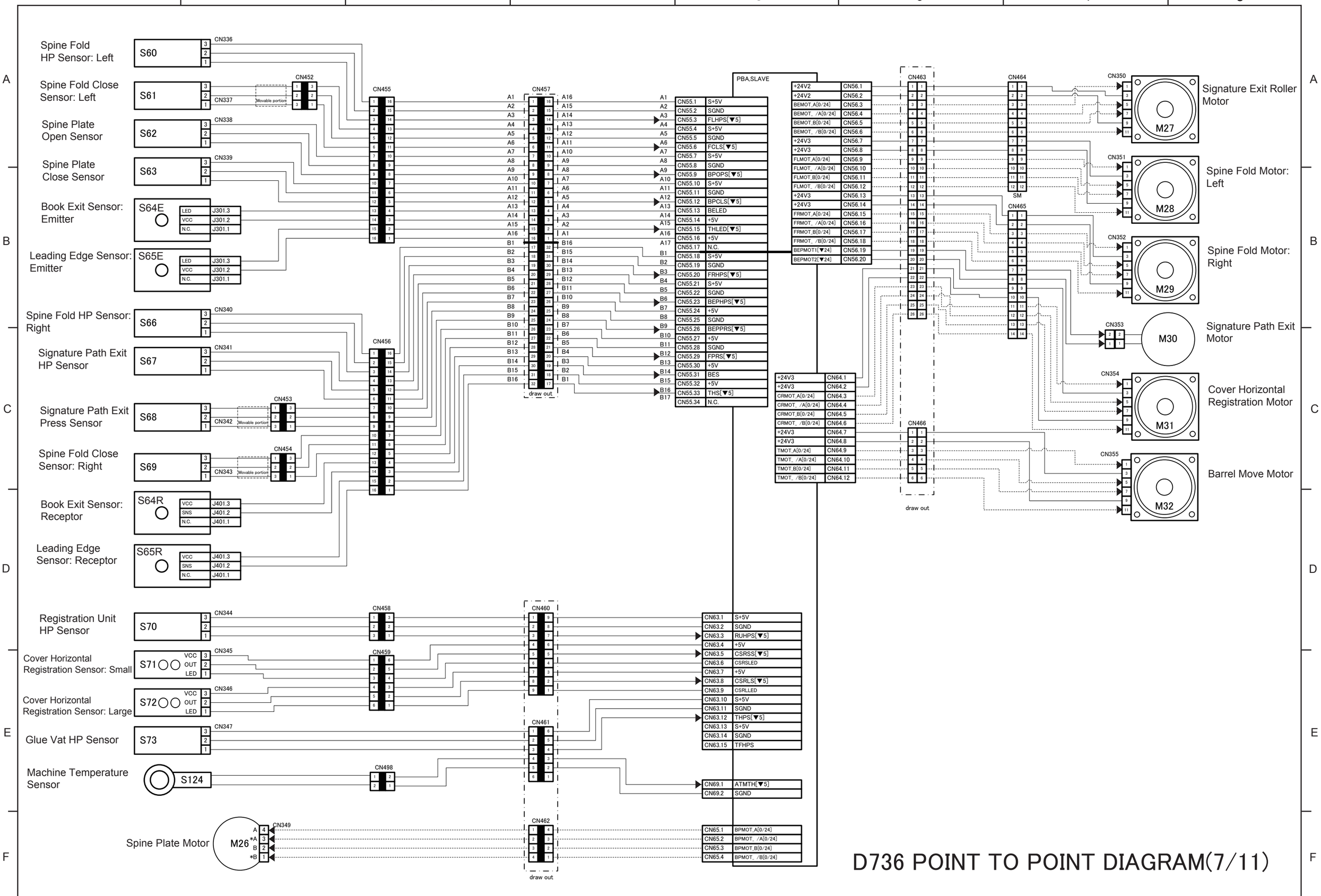

D736 POINT TO POINT DIAGRAM(7/11)

D736 POINT TO POINT DIAGRAM(8/11)

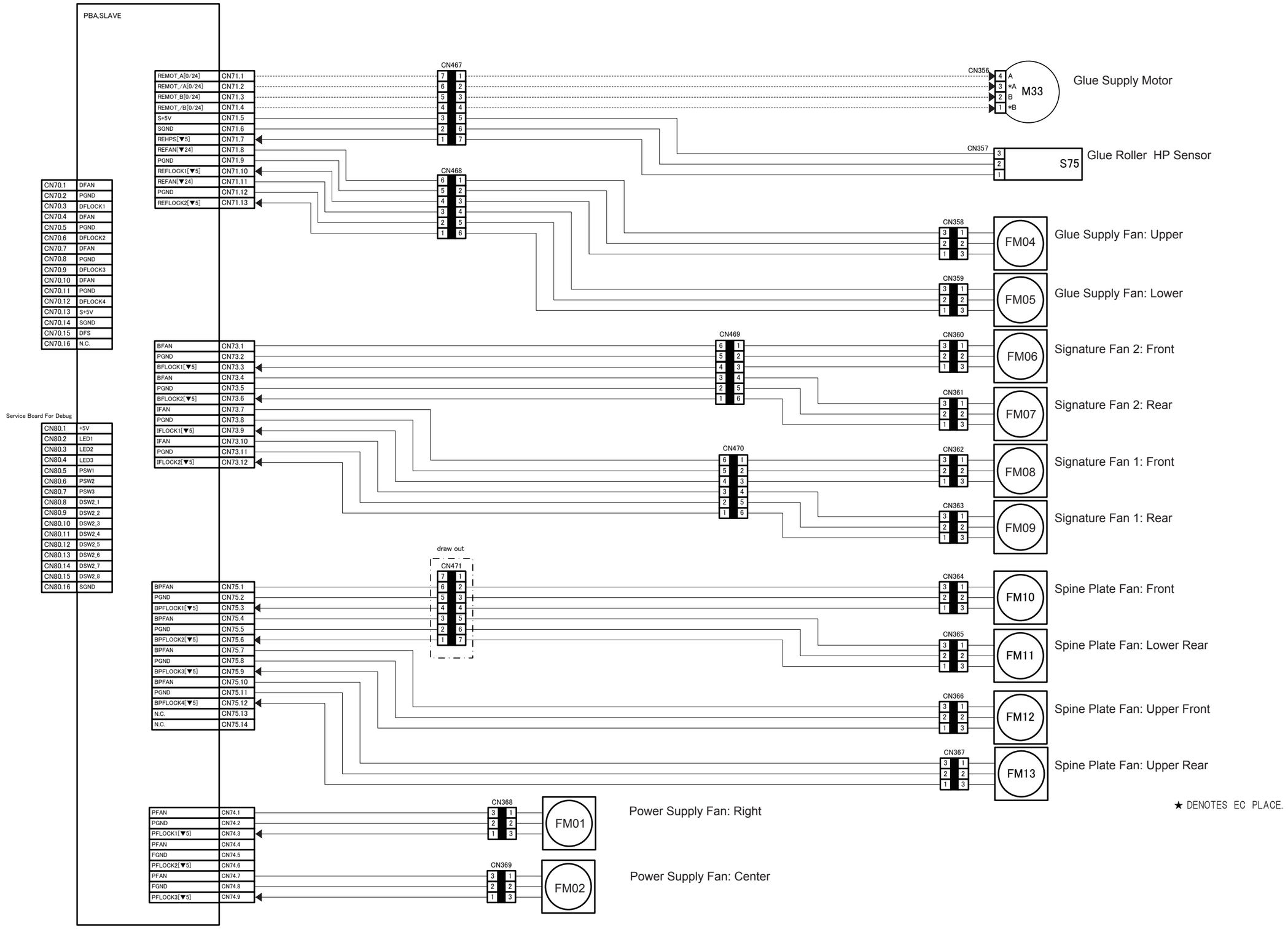

★ DENOTES EC PLACE.

D736 POINT TO POINT DIAGRAM(9/11)

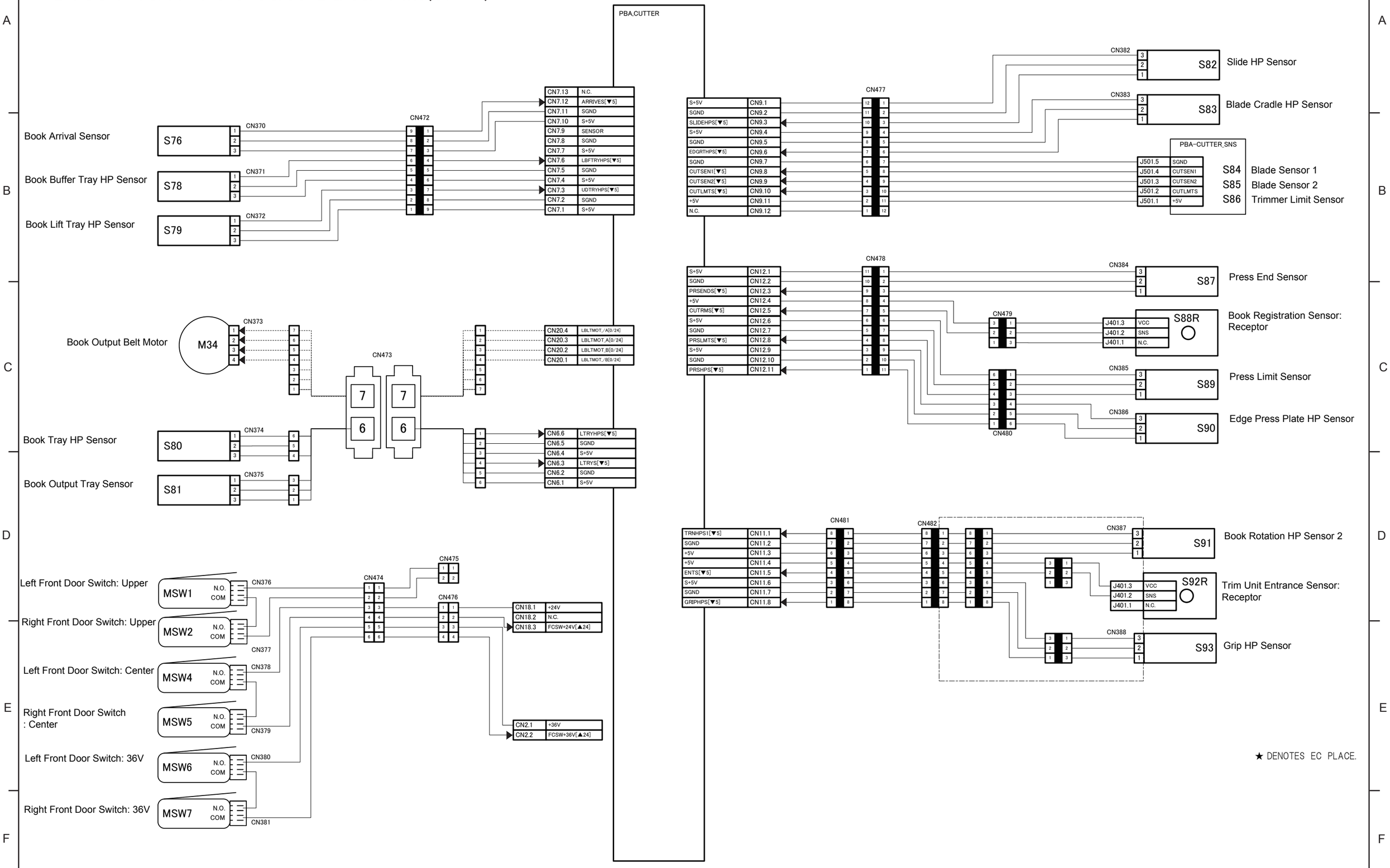

D736 POINT TO POINT DIAGRAM(10/11)

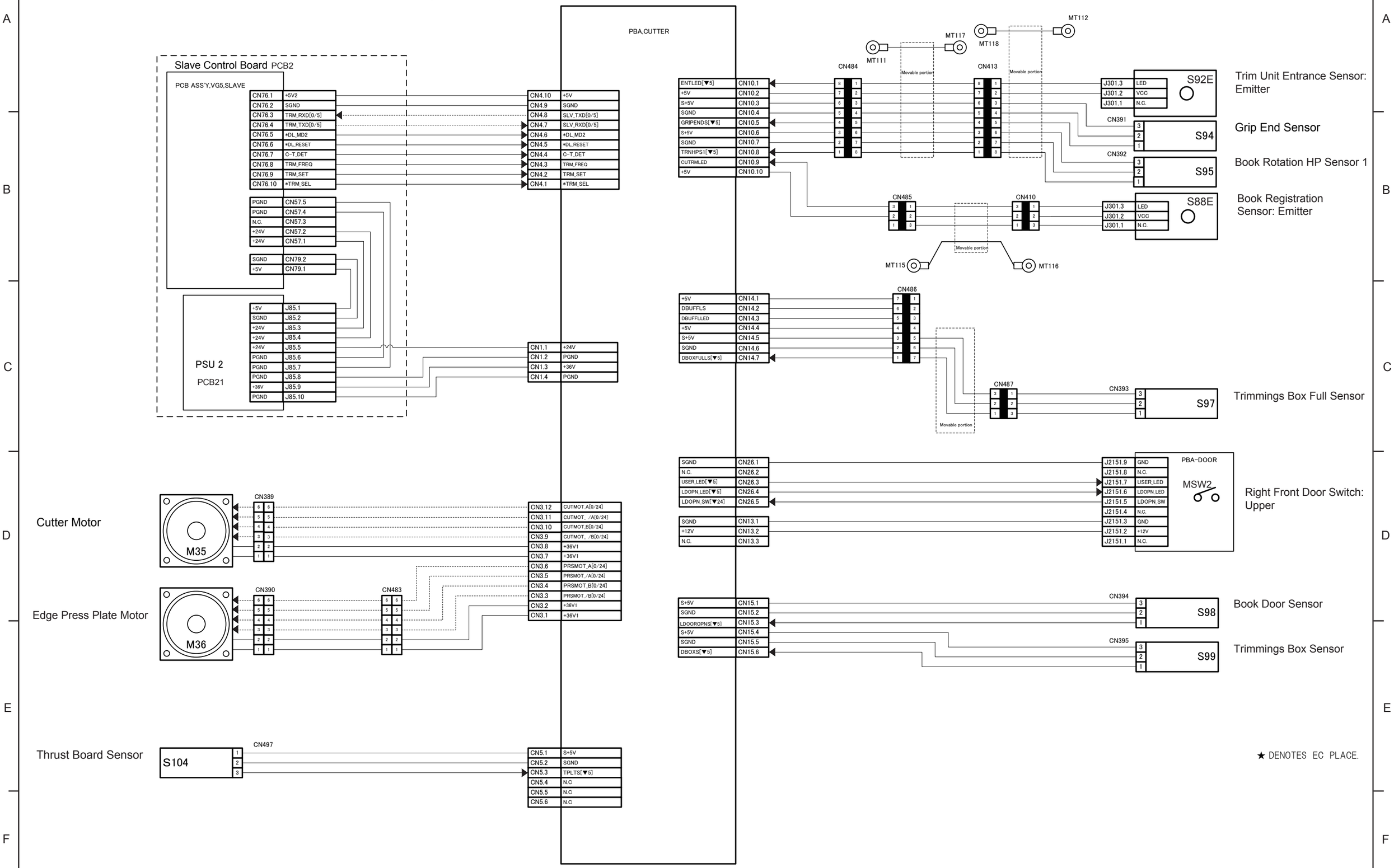

D736 POINT TO POINT DIAGRAM(11/11)

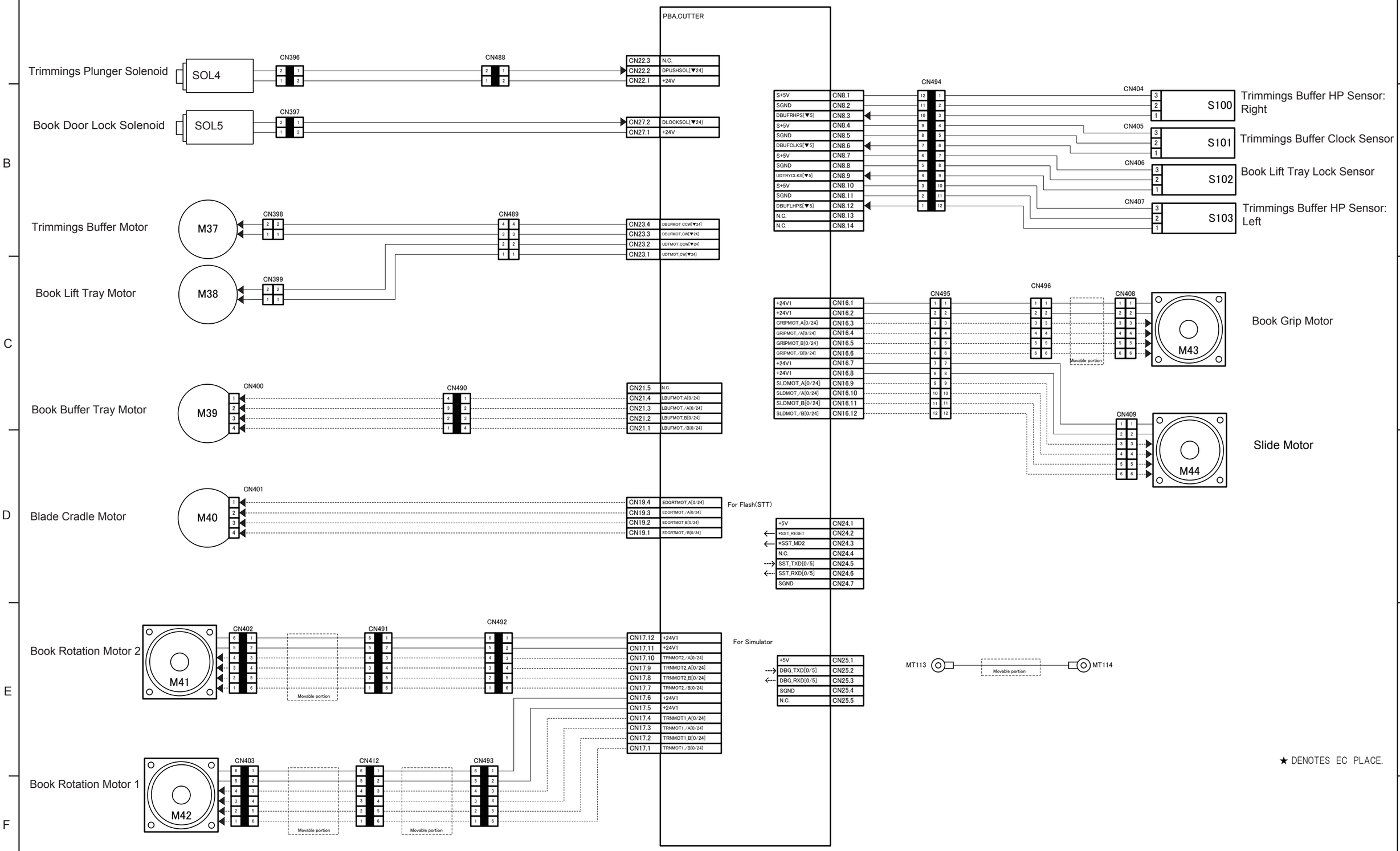

D736 POINT TO POINTDIAGRAM

Cover Interposer Tray for Perfect Binder Type S1

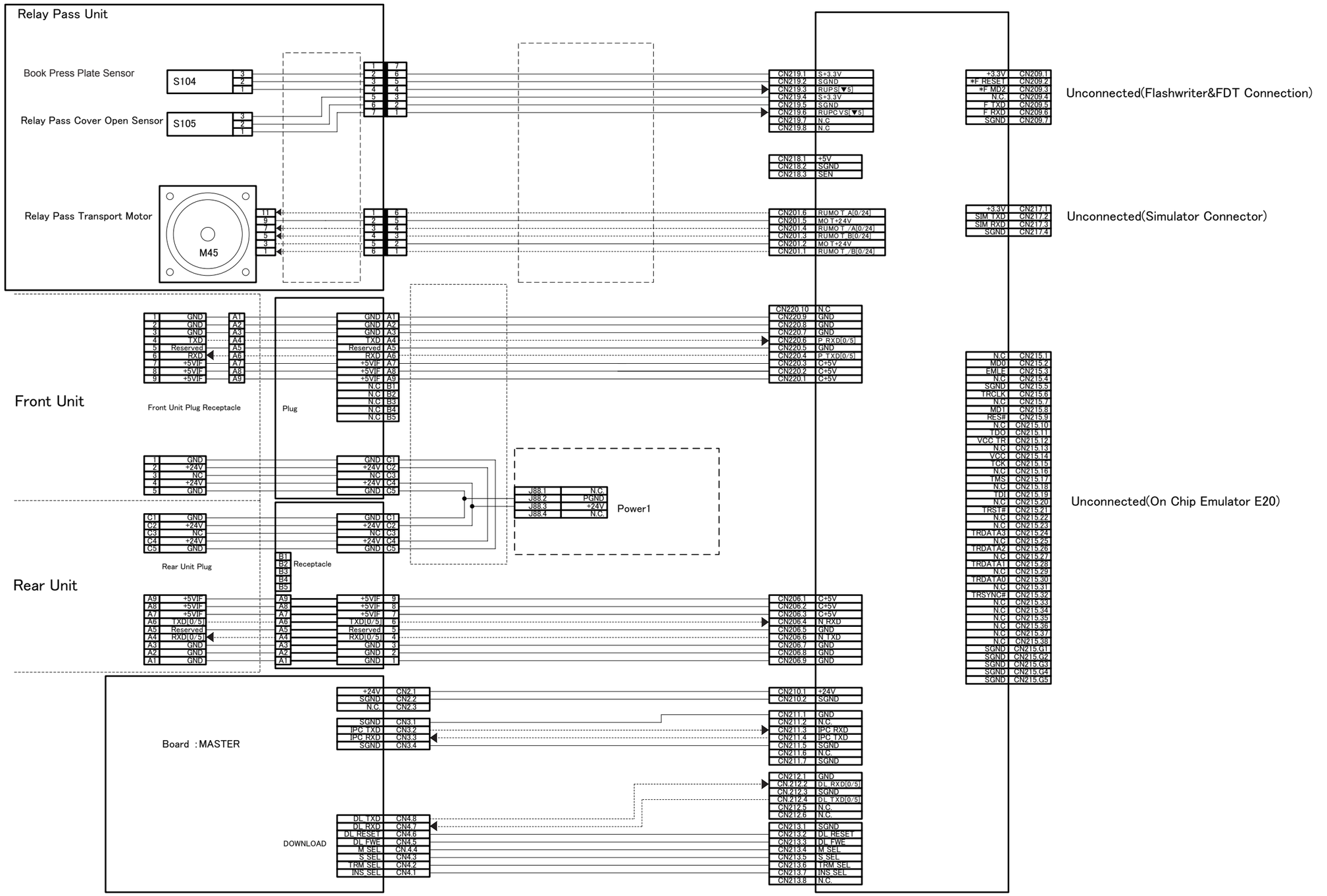

★ DENOTES EC PLACE.

D736 POINT TO POINT DIAGRAM

Transit Pass Unit for Perfect Binder Type S1

For Perfect Binder GB5010

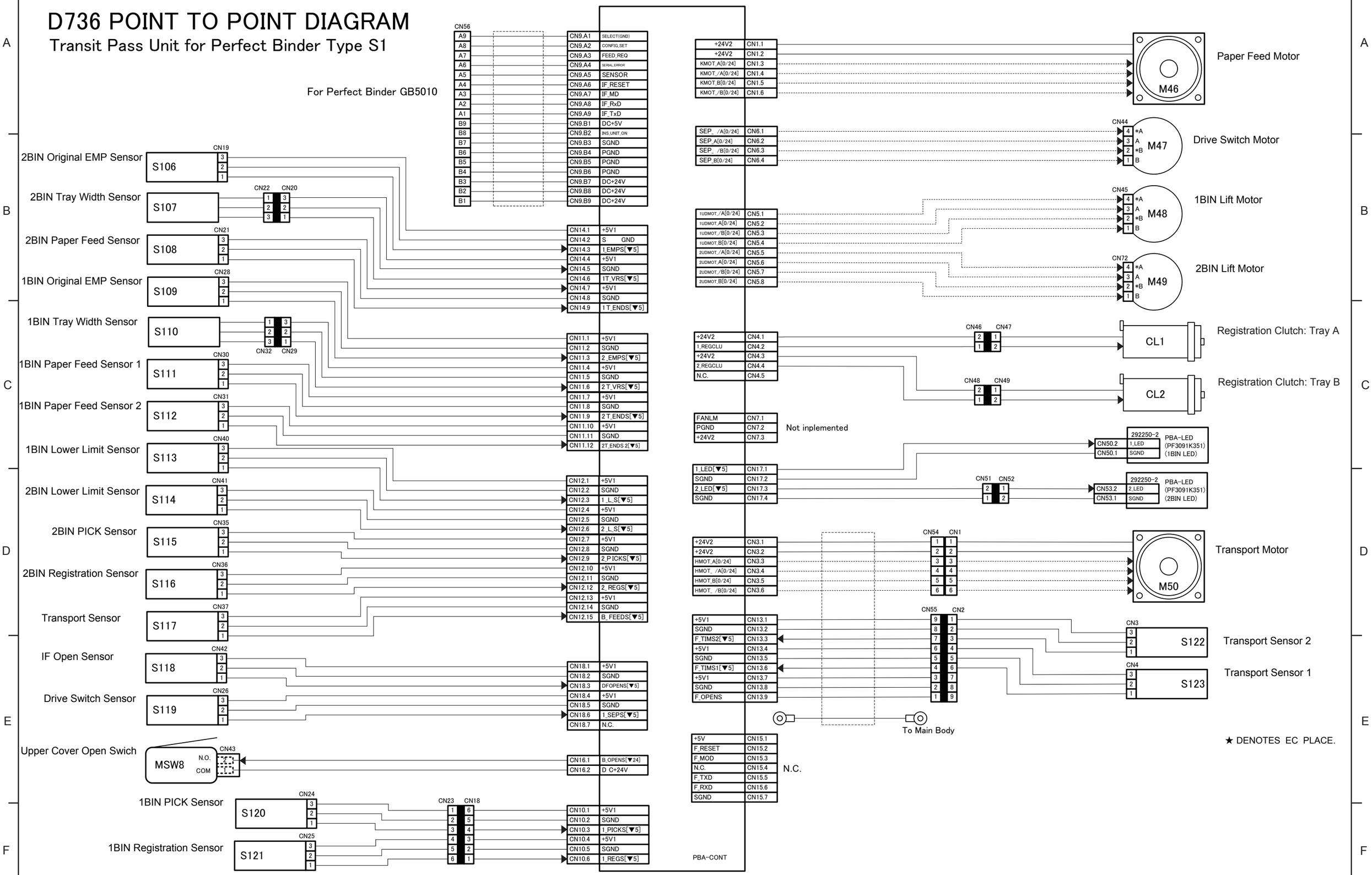

D736 ELECTRICAL COMPONENT LAYOUT (1/4)

Fig.-1

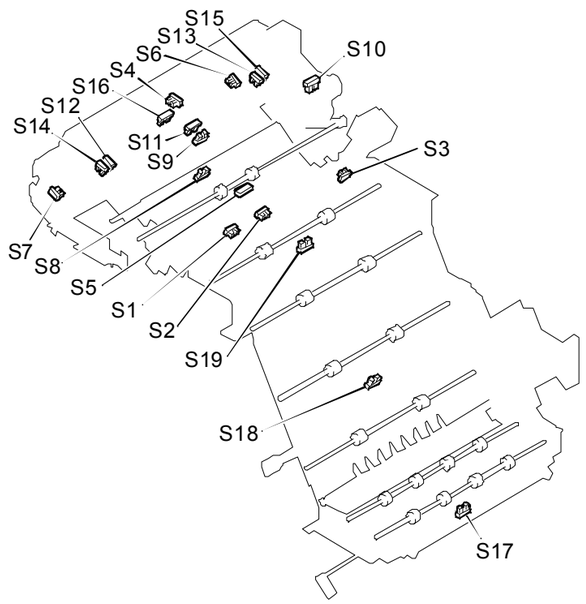

d391v037

Fig.-2

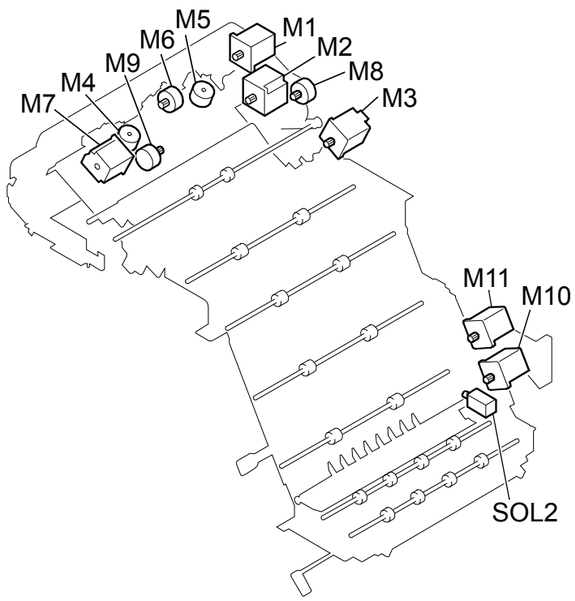

d391v038

Fig.-3

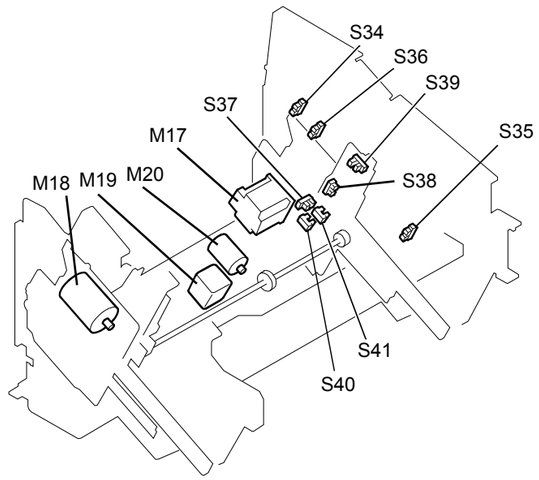

d391v041

Fig.-4

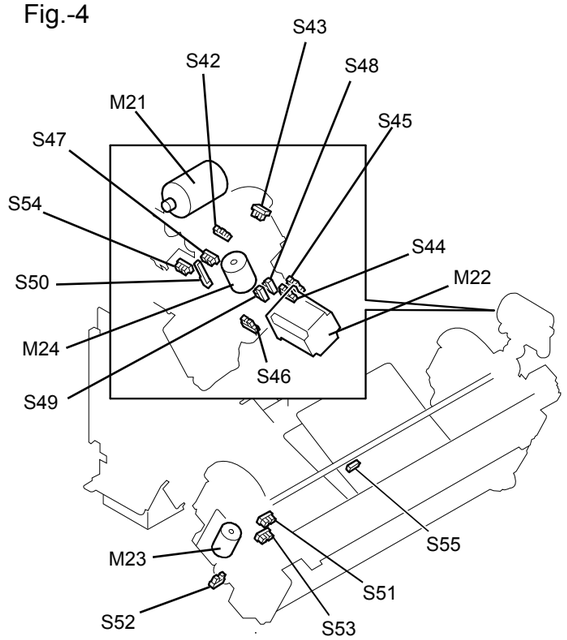

d391v043

Fig.-5

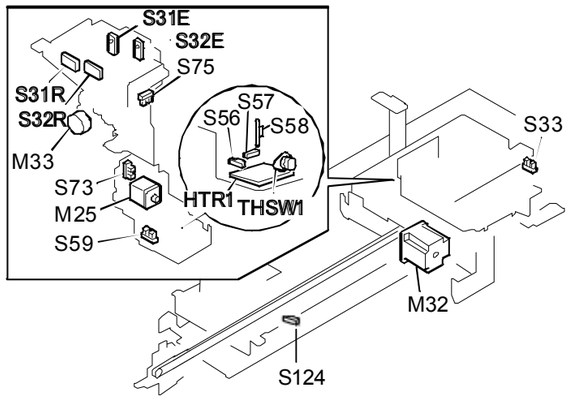

d7363058

Fig.-6

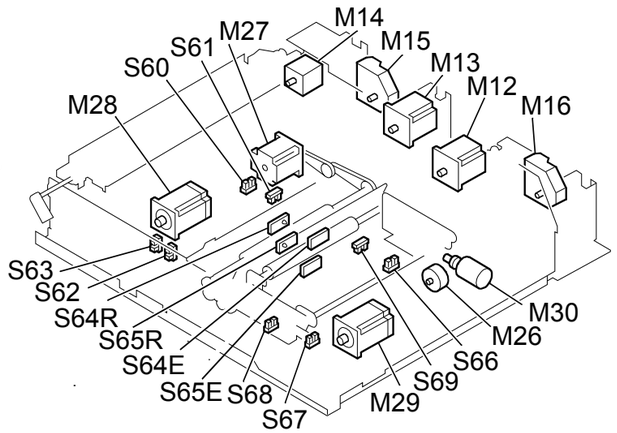

d391v049

D736 ELECTRICAL COMPONENT LAYOUT (2/4)

Fig.-9

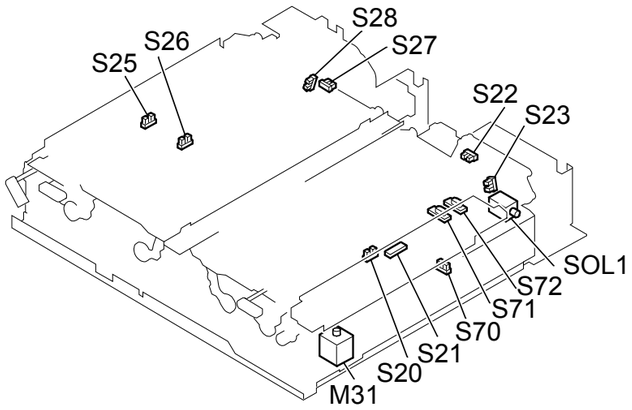

d391v050

Fig.-10

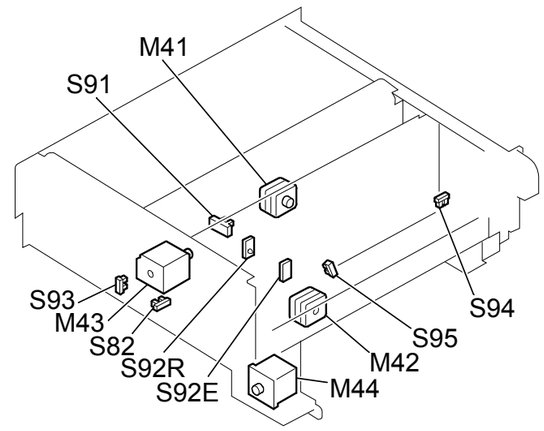

d391v055

Fig.-11

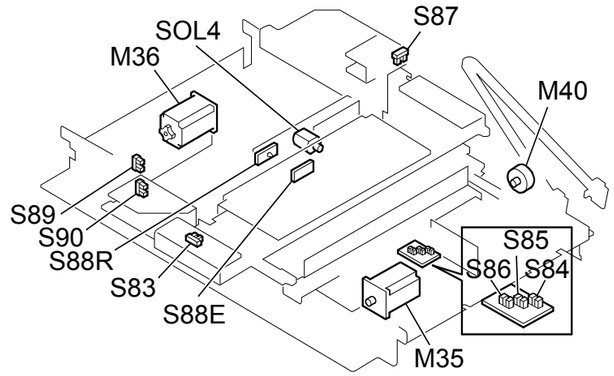

d391v057

Fig.-12

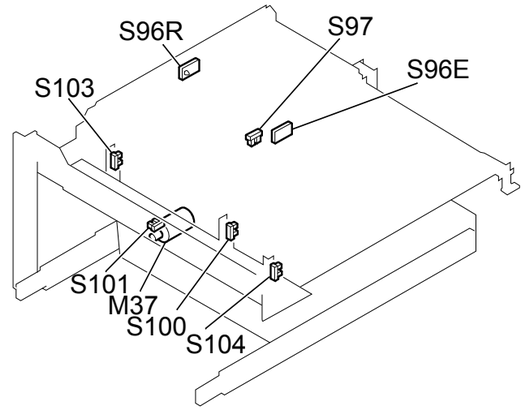

d391v060

Fig.-13

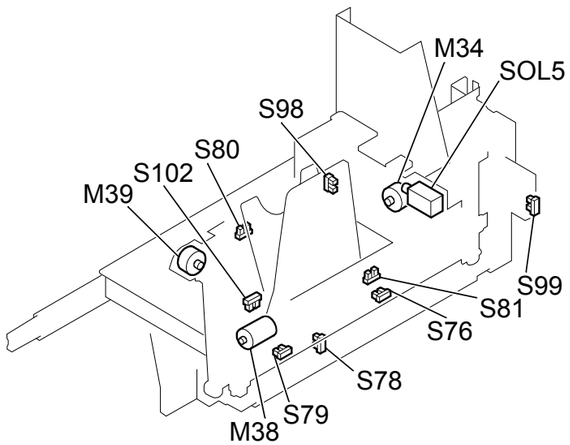

d391v062

Fig.-14

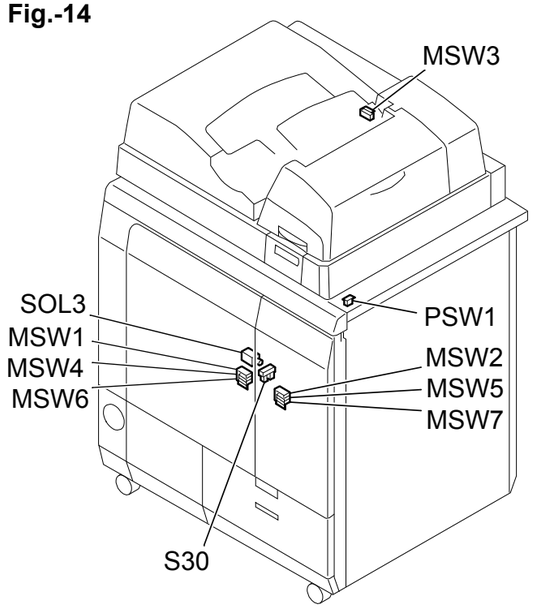

d391v065

Fig.-15

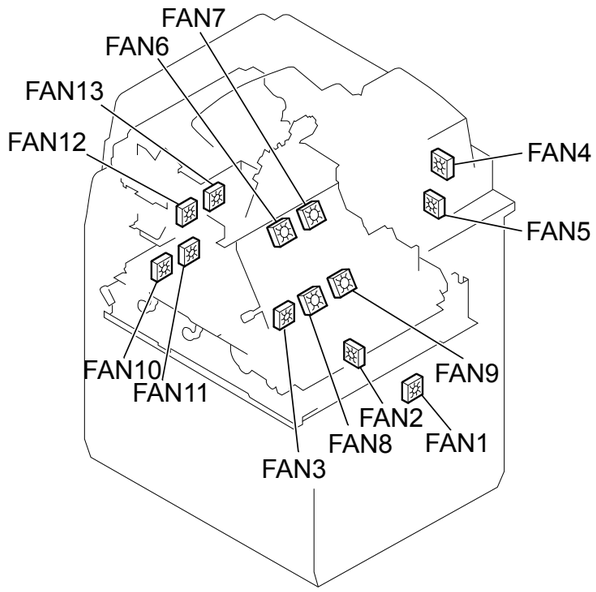

d391v067

Fig.-16

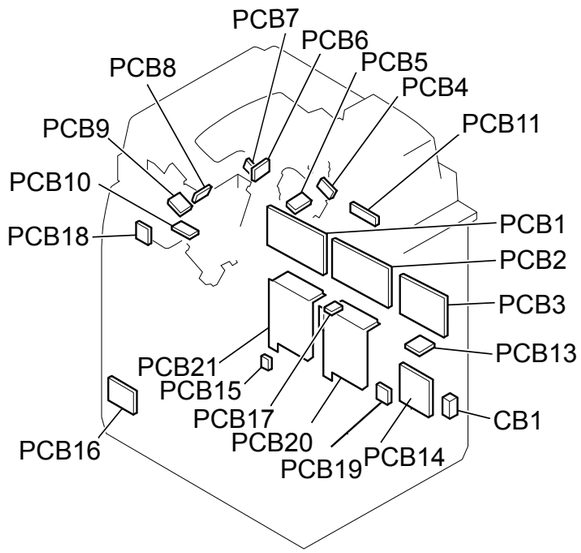

d391v069

D736 ELECTRICAL COMPONENT LAYOUT (3/4)

Symbol	Index No.	Description	P to P
Sensors			
S1	F1	Paper Detection Sensor: Front	1-A1
S2	F1	Paper Detection Sensor: Rear	1-A1
S3	F1	TE Press Lever HP Sensor	1-A1
S4	F1	Top Cover Sensor	1-B1
S5	F1	Timing Sensor	1-B1
S6	F1	Stacking Tray Overflow Sensor	1-B1
S7	F1	Tray Lower Limit Sensor	1-B1
S8	F1	Tray Empty Sensor	1-C1
S9	F1	Stacking Tray HP Sensor	1-C1
S10	F1	Switchback Flapper HP Sensor	1-C1
S11	F1	Switchback Roller HP Sensor	1-C1
S12	F1	Jog Fence HP Sensor: Front:	1-D1
S13	F1	Jog Fence HP Sensor: Rear Small	1-D1
S14	F1	Jog Fence HP Sensor: Front:	1-D1
S15	F1	Jog Fence HP Sensor: Rear: Large	1-D1
S16	F1	Stacking Weight HP Sensor	1-D1
S17	F1	Entrance sensor	1-D7
S18	F1	Signature Path Sensor 1	1-D7
S19	F1	Signature Path Sensor 2	1-D7
S20	F9	Cover Path: Sensor 1	2-A1
S21	F9	Cover Registration Sensor	2-B1
S22	F9	Cover Guide HP Sensor: Right	2-B1
S23	F9	Cover Guide Open Sensor: Right	2-B1
S25	F9	Horizontal Path Exit Sensor	2-C1
S26	F9	Cover Path: Sensor 2	2-C1
S27	F9	Cover Guide HP Sensor: Left	2-C1
S28	F9	Cover Guide Open Sensor: Left	2-C1
S30	F14	Right Front Door Sensor	2-E7
S31E	F5	Glue Vat Empty Sensor: Emitter	3-A7
S31R	F5	Glue Vat Empty Sensor: Receptor	3-B7
S32E	F5	Glue Vat Full Sensor: Emitter	3-B7
S32R	F5	Glue Vat Full Sensor: Receptor	3-B7
S33	F5	Glue Supply Cover Sensor	3-C7
S34	F3	Signature HP Sensor	4-B7
S35	F3	Signature Main Grip Position	4-B7
S36	F3	Main Grip Rotate Enable Sensor	4-B7
S37	F3	Sub Grip HP Sensor	4-C7
S38	F3	Sub Grip Size HP Sensor	4-D7
S39	F3	Sub Grip Signature Sensor	4-E7
S40	F3	Sub Grip Open Sensor	4-E7
S41	F3	Sub Grip Close Sensor	4-E7
S42	F4	Rotate-to-Binding Position Sensor	5-A4
S43	F4	Main Grip Rotate HP Sensor	5-A4
S44	F4	Main Grip HP Sensor: Low	5-B4
S45	F4	Main Grip HP Sensor: High	5-B4
S46	F4	Main Grip Encoder: Rear	5-D4
S47	F4	Main Grip Open Sensor: Rear	5-D4
S48	F4	Main Grip Press Sensor 1	5-E4

Symbol	Index No.	Description	P to P
Sensors			
S49	F4	Main Grip Press Sensor 2	5-E4
S50	F4	Signature Thickness Sensor	5-E4
S51	F4	Main Grip Open Sensor: Front	5-E4
S52	F4	Main Grip Encoder: Front	5-E4
S53	F4	Main Grip Close Sensor: Front	5-E4
S54	F4	Main Grip Close Sensor: Rear	5-F4
S55	F4	Main Grip Signature Sensor	5-F4
S56	F5	Glue Temperature Thermistor	6-C7
S57	F5	Glue Abnormal Temperature Thermistor	6-C7
S58	F5	Glue Level Thermistor	6-C7
S59	F5	Glue Vat Roller Rotation Sensor	6-D7
S60	F6	Spine Fold HP Sensor: Left	7-A1
S61	F6	Spine Fold Close Sensor: Left	7-A1
S62	F6	Spine Plate Open Sensor	7-A1
S63	F6	Spine Plate Close Sensor	7-B1
S64E	F6	Book Exit Sensor: Emitter	7-B1
S64R	F6	Book Exit Sensor: Receptor	7-D1
S65E	F6	Leading Edge Sensor: Emitter	7-B1
S65R	F6	Leading Edge Sensor: Receptor	7-D1
S66	F6	Spine Fold HP Sensor: Right	7-B1
S67	F6	Signature Path Exit HP Sensor	7-C1
S68	F6	Signature Path Exit Press Sensor	7-C1
S69	F6	Spine Fold Close Sensor: Right	7-C1
S70	F9	Registration Unit HP Sensor	7-D1
S71	F9	Cover Horizontal Registration Sensor: Small	7-E1
S72	F9	Cover Horizontal Registration Sensor: Large	7-E1
S73	F5	Glue Vat HP Sensor	7-E1
S75	F5	Glue Roller HP Sensor	8-B7
S76	F13	Book Arrival Sensor	9-B1
S78	F13	Book Buffer Tray HP Sensor	9-B1
S79	F13	Book Lift Tray HP Sensor	9-B1
S80	F13	Book Tray HP Sensor	9-C1
S81	F13	Book Output Tray Sensor	9-C1
S82	F11	Slide HP Sensor	9-A7
S83	F11	Blade Cradle HP Sensor	9-A7
S84	F11	Blade Sensor 1	9-B7
S85	F11	Blade Sensor 2	9-B7
S86	F11	Trimmer Limit Sensor	9-B7
S87	F11	Press End Sensor	9-B7
S88E	F11	Book Registration Sensor: Emitter	10-B7
S88R	F11	Book Registration Sensor:	9-C7
S89	F11	Press Limit Sensor	9-C7
S90	F11	Edge Press Plate HP Sensor	9-C7
S91	F11	Book Rotation HP Sensor 2	9-D7

Symbol	Index No.	Description	P to P
Sensors			
S92E	F11	Trim Unit Entrance Sensor:	10-A7
S92R	F11	Trim Unit Entrance Sensor: Receptor	9-D7
S93	F11	Grip HP Sensor	9-E7
S94	F11	Grip End Sensor	10-B7
S95	F11	Book Rotation HP Sensor 1	10-B7
S97	F12	Trimmings Box Full Sensor	10-C7
S98	F13	Book Door Sensor	10-D7
S99	F13	Trimmings Box Sensor	10-E7
S100	F12	Trimmings Buffer HP Sensor:	11-B7
S101	F12	Trimmings Buffer Clock Sensor	11-B7
S102	F12	Book Lift Tray Lock Sensor	11-B7
S103	F12	Trimmings Buffer HP Sensor: Left	11-B7
S104	F12	Book Press Plate Sensor	
S124	F5	Machine Temperature Sensor	7-E1

D736 ELECTRICAL COMPONENT LAYOUT (4/4)

Symbol	Index No.	Description	P to P
Motors			
M1	F2	Stacking Roller Motor	1-E1
M2	F2	Stacking Tray Lift Motor	1-E1
M3	F2	TE Press Lever Motor	1-F1
M4	F2	Jogger Motor : Front	1-A7
M5	F2	Jogger Motor: Rear	1-B7
M6	F2	Stacking Weight Motor	1-B7
M7	F2	Switchback Roller Lift Motor	1-C7
M8	F2	Switchback Flapper Motor	1-C7
M9	F2	Stacking Tray Motor	1-C7
M10	F2	Entrance Motor	1-E7
M11	F2	Signature Transport Motor	1-E7
M12	F6	Cover Motor: Right	2-B7
M13	F6	Cover Motor: Left	2-B7
M14	F6	Exit Motor	2-C7
M15	F6	Cover Guide Motor: Left	2-C7
M16	F6	Cover Guide Motor: Right	2-C7
M17	F3	Sub Grip Lift Motor	4-B7
M18	F3	Signature Move Motor	4-C7
M19	F3	Sub Grip Size Motor	4-D7
M20	F3	Sub Gripper Motor	4-D7
M21	F4	Grip Unit Rotation Motor	5-A4
M22	F4	Main Grip Lift Motor	5-B4
M23	F4	Grip Motor: Rear	5-F4
M24	F4	Grip Motor: Front	5-F4
M25	F5	Glue Vat Roller Motor	6-B7
M26	F6	Spine Plate Motor	7-F2
M27	F6	Signature Exit Roller Motor	7-A7
M28	F6	Spine Fold Motor: Left	7-B7
M29	F6	Spine Fold Motor: Right	7-B7
M30	F6	Signature Path Exit Motor	7-C7
M31	F9	Cover Horizontal Registration Motor	7-C7
M32	F5	Glue Vat Motor	7-D7
M33	F5	Glue Supply Motor	8-A6
M34	F13	Book Output Belt Motor	9-C2
M35	F11	Cutter Motor	10-D1
M36	F11	Edge Press Plate Motor	10-E1
M37	F12	Trimmings Buffer Motor	11-B1
M38	F13	Book Lift Tray Motor	11-C1
M39	F13	Book Buffer Tray Motor	11-C1
M40	F11	Blade Cradle Motor	11-D1
M41	F11	Book Rotation Motor 2	11-E1
M42	F11	Book Rotation Motor 1	11-F1
M43	F11	Book Grip Motor	11-C7
M44	F11	Slide Motor	11-D7

Symbol	Index No.	Description	P to P
PCBs			
PCB1	F16	Master Control Board	6-A2
PCB2	F16	Slave Control Board	3-A1 10-A1
PCB3	F16	Cutter Control Board	6-C2
PCB13	F16	Transceiver Board	3-C1
PCB18	F16	Service Board	2-E1
PCB20	F16	PSU1	3-C5
PCB21	F16	PSU2	3-D5 6-D2 10-C1
Switches			
MSW1	F14	Left Front Door Switch: Upper	9-D1
MSW2	F14	Right Front Door Switch: Upper	9-E1 10-D7
MSW3	F14	Top Cover Switch	2-D1
MSW4	F14	Left Front Door Switch: Center	9-E1
MSW5	F14	Right Front Door Switch: Center	9-E1
MSW6	F14	Left Front Door Switch: 36V	9-E1
MSW7	F14	Right Front Door Switch: 36V	9-F1
PSW1	F14	Power Supply Switch	2-E2 2-E4 8-D2
CB1	F16	Breaker Switch	3-D7
Fan			
FAN01	F15	Power Supply Fan: Right	8-E4
FAN02	F15	Power Supply Fan: Center	8-F4
FAN03	F15	Power Supply Fan: Left	3-C7
FAN04	F15	Glue Supply Fan: Upper	8-B6
FAN05	F15	Glue Supply Fan: Lower	8-B6
FAN06	F15	Signature Fan 2: Front	8-C6
FAN07	F15	Signature Fan 2: Rear	8-C6
FAN08	F15	Signature Fan 1: Front	8-C6
FAN09	F15	Signature Fan 1: Rear	8-D6
FAN10	F15	Spine Plate Fan: Front	8-D6
FAN11	F15	Spine Plate Fan: Lower Rear	8-E6
FAN12	F15	Spine Plate Fan: Upper Front	8-E6
FAN13	F15	Spine Plate Fan: Upper Rear	8-E6
Others			
HTR1	F5	Glue Heater	6-B7
THSW1	F5	Thermostat	6-D7
Solenoid			
SOL1	F9	Cover Grip Solenoid (SOL1)	2-D7
SOL2	F2	Entrance JG Solenoid	2-D7
SOL3	F14	Right Front Door Solenoid (SOL3)	2-E7
SOL4	F11	Trimmings Plunger Solenoid	11-A2
SOL5	F13	Book Door Lock Solenoid	11-B2

D737 POINT TO POINT DIAGRAM (1/5)

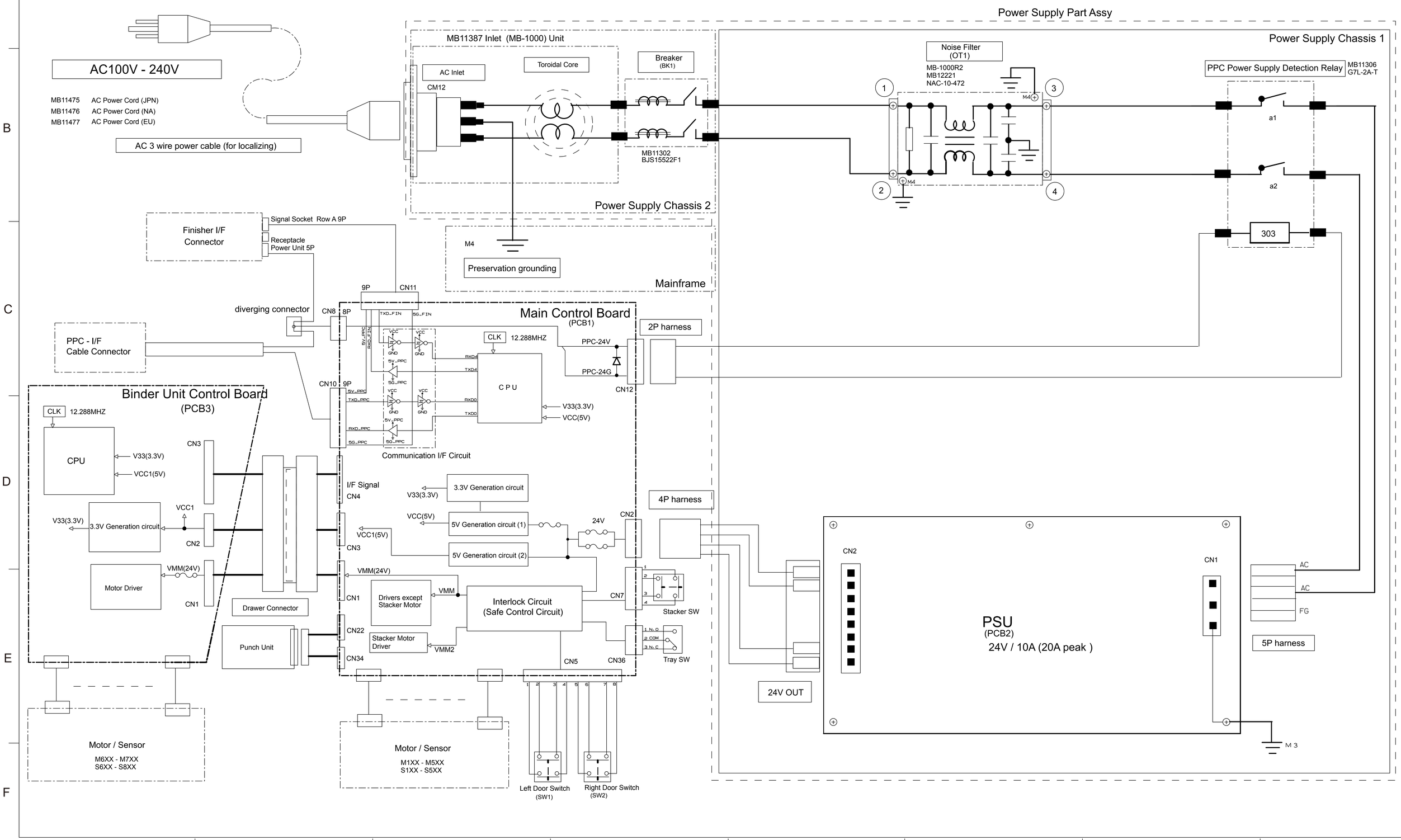

D737 ELECTRICAL COMPONENT LAYOUT (1/3)

Fig.-1

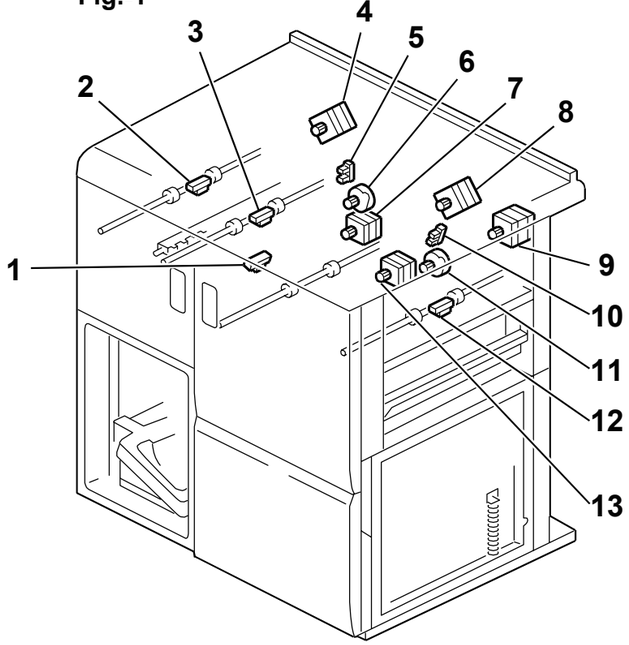

D519V101.WMF

Fig.-2

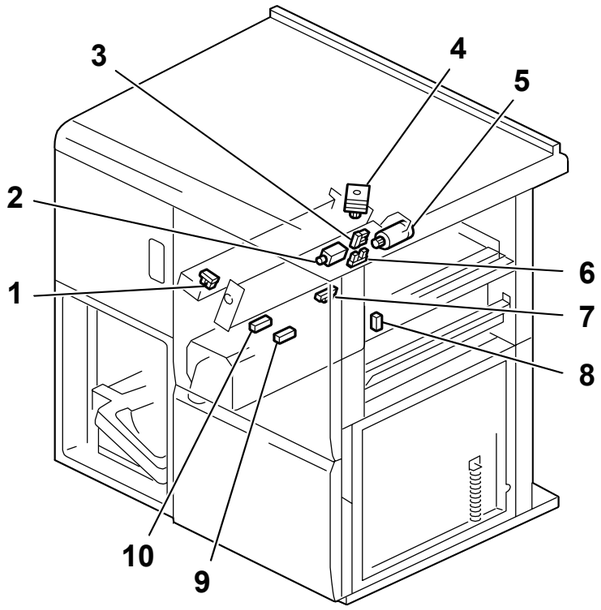

D519V102.WMF

Fig.-3

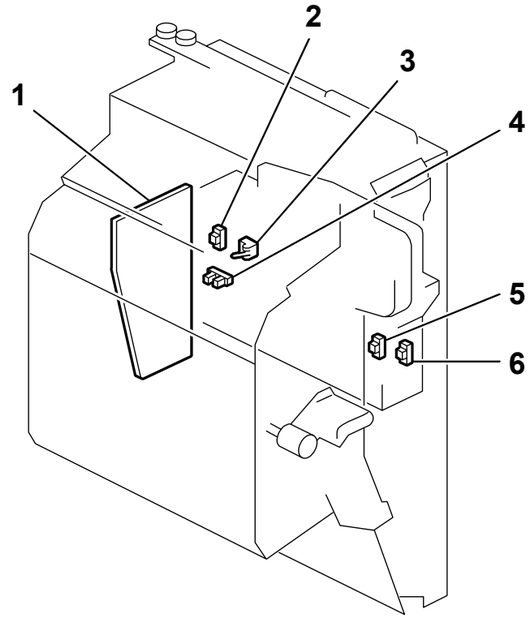

D392V103.WMF

Fig.-4

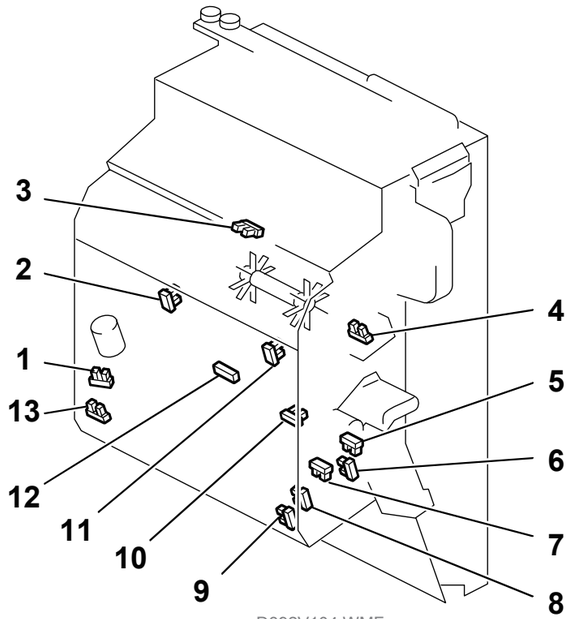

D392V104.WMF

Fig.-5

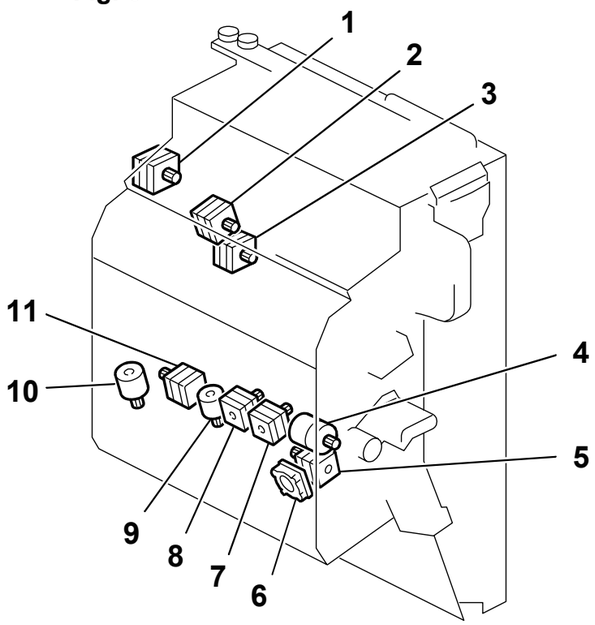

D392V105.WMF

Fig.-6

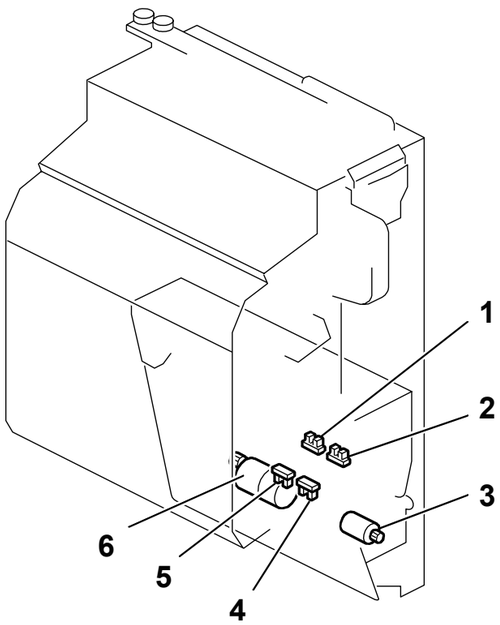

D392V106.WMF

Fig.-7

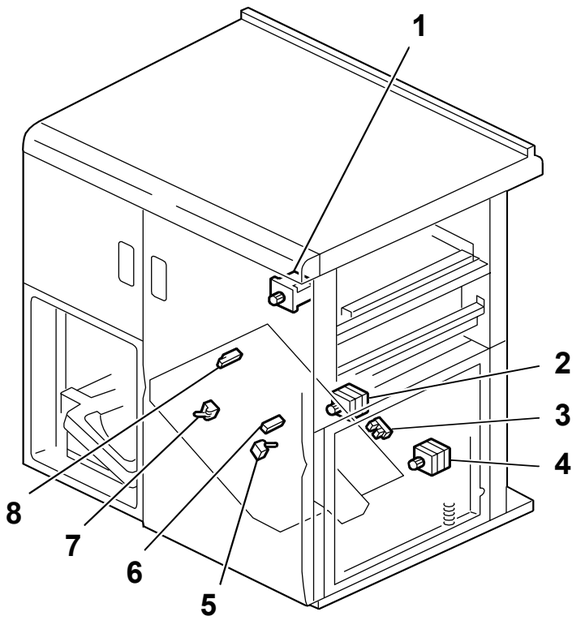

D519V107.WMF

Fig.-8

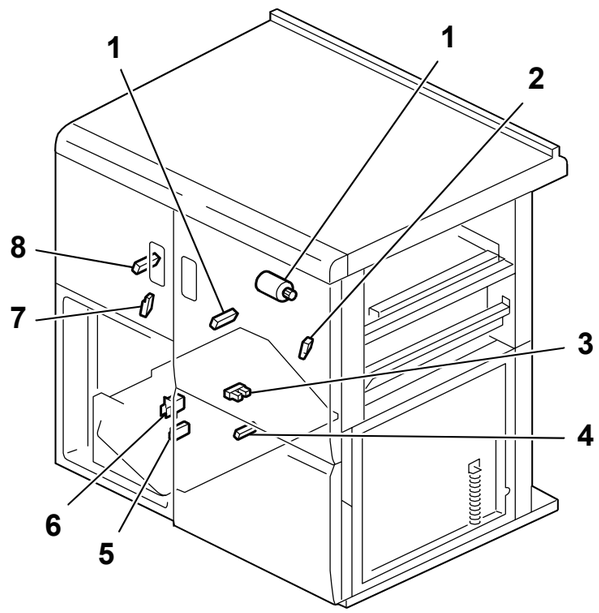

D519V108.WMF

D737 ELECTRICAL COMPONENT LAYOUT (2/3)

Fig.-9

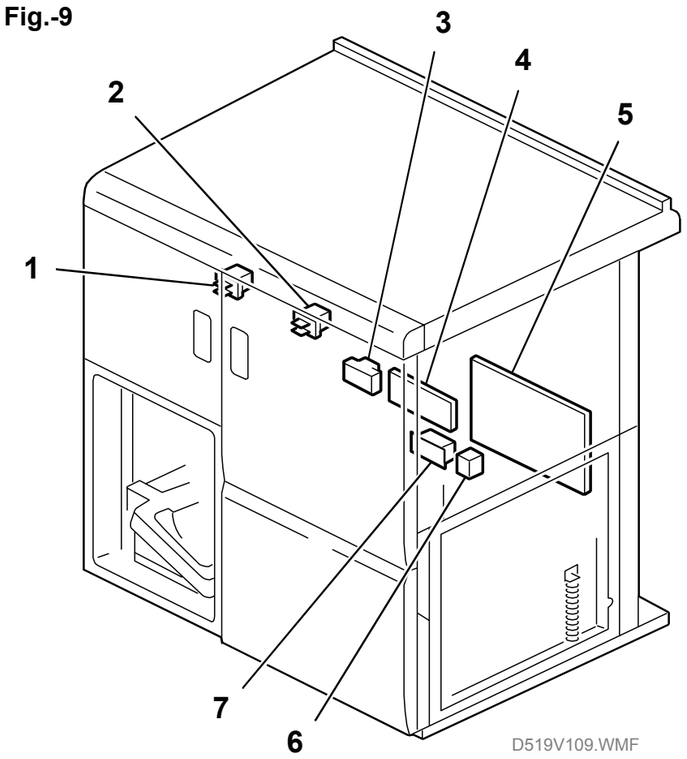

Symbol	Index No.	Description	P to P
Sensors			
S101	F1-12	Entrance Sensor	1-D1 3-A1
S102	F1-3	Transport Sensor	2-D1 3-B1
S103	F1-2	Exit Sensor	2-D1 3-B1
S201	F1-1	Pre-Punch Jogger Trigger Sensor	2-D1 3-B1
S202	F2-7	Binder Delivery Sensor	2-D1 3-B1
S203	F1-5	Path JG HP Sensor	2-D1 3-B1
S301	F2-1	Pre-Punch Jogger HP Sensor	2-D1 3-B1
S302	F2-3	Punch HP Sensor	3-E5
S303	F2-6	Punch Encorder Sensor	3-E5
S307R	F2-10	Full Sensor (R)	2-E1 3-C1
S307E	F2-9	Full Sensor (E)	2-E1 3-C1
S308	F2-8	Chad Box Sensor	2-E1 2-E4 3-D1
S309	F1-10	Jog Roller Lift HP Sensor	2-D1 3-C1
S401	F7-5	Output Belt 1 HP Sensor	2-E6 3-C1
S402	F7-7	Output Belt 2 HP Sensor	2-E6 3-D1
S403	F7-3	Output Belt Rotation HP Sensor	2-E6 3-D1
S404	F7-6	Output Unit Entrance Sensor	2-E6 3-C1
S405	F7-8	Book Pass Sensor	2-E6 3-D1 3-E2
S501	F8-3	Stacker HP Sensor	2-E6 3-E1
S502R	F8-8	Stack Height Sensor (R)	1-E2
S502E	F8-9	Stack Height Sensor (E)	2-E6 3-D1
S504	F8-4	Stack Document Sensor	2-E6 3-E1
S505	F8-6	Tray Detect Sensor	2-E1
S506	F8-5	Obstacle Detect Microswitch	3-F1
S507R	F8-2	Book Position Sensor (R)	2-E6 3-D1
S507E	F8-7	Book Position Sensor (E)	2-E6 3-E1

Symbol	Index No.	Description	P to P
Sensors			
S601	F4-2	Side Fence 1HP Sensor	2-A6 4-B1
S602	F4-3	Paddle Roller HP Sensor	2-A7 4-C1
S603	F4-10	Clamp HP Sensor	2-A5 4-B1
S604	F4-6	Alignment Pin HP Sensor	2-A5 4-A1
S605	F4-9	Shutter HP Sensor	2-A6 4-A1
S606	F4-5	50-Sheet Detect Sensor	2-A6 4-B1
S607	F4-7	Stack Thickness Sensor	2-A6 4-B1
S609	F4-12	Paper LE Detect Sensor	2-A6 4-B1
S610	F4-8	Alignment Pin Up Sensor	2-A6 4-B1
S611	F4-11	Side Fense 2 HP Sensor	2-A6 4-B1
S612	F4-4	Stack Tamper HP Sensor	2-A7 4-C1
S613	F4-1	Shutter HP Sensor 2	2-A6 4-C1
S614	F4-13	Runout Roller HP Sensor	2-A6 4-C1
S701	F6-1	Clamp Unit HP Sensor	2-D7 4-D1
S702	F6-2	Bind Timing Sensor	2-D7 4-D1
S706	F6-4	Ring Switch HP Sensor	2-D7 4-D1
S707	F6-5	Ring Switch Timing Sensor	2-D7 4-D1
S801	F3-3	Ring Cartridge Sensor	2-E7 4-E1
S802	F3-5	Ring Reserved Sensor	2-E7 4-E1
S803	F3-4	Ring Near-End Sensor	2-E7 4-E1
S804	F3-6	50/100 Ring Detect Sensor	2-E7 4-E1
S805	F3-2	Ring Cartridge Type Sensor	2-E7 4-E2

D737 ELECTRICAL COMPONENT LAYOUT (3/3)

Symbol	Index No.	Description	P to P
Motors			
M101	F1-9	Entrance Motor	2-B1 3-A5
M102	F1-8	Transport Motor	2-B1 3-B5
M103	F1-4	Exit Motor	2-C1 3-C5
M201	F1-6	Path JG Motor	2-C1 3-C5
M301	F1-7	Jog Roller Motor	2-C1 3-C5
M302	F2-4	Side Jogger Motor	2-C1 3-B5
M303	F1-13	Punch Runout Motor	2-C1 3-C5
M304	F2-5	Punch Motor	2-D1 3-E5
M305	F1-11	Jog Roller Lift Motor	2-C1 3-B5
M401	F7-4	Output Belt 1 Motor	2-C1 3-D5
M402	F7-1	Output Belt 2 Motor	2-D1 3-D5
M403	F7-2	Output Belt Rotation Motor	2-D1 3-E5
M501	F8-1	Stacker Motor	2-D1 3-D5
M601	F5-2	Paddle Roller Motor	2-B8 4-A5
M602	F5-9	Alignment Pin Motor	2-D7 4-D5
M603	F5-3	Paddle Roller Lift Motor	2-B8 4-B5
M604	F5-7	Jog Fence 1 Motor	2-C8 4-B5
M605	F5-4	Spine Clamp Motor	2-C8 4-C5
M606	F5-8	Jog Fence 2 Motor	2-C8 4-C5
M607	F5-1	Stack Tamper Motor	2-B8 4-B5
M608	F5-10	Shutter Motor	2-C7 4-D5
M609	F5-5	Runout Roller Motor	2-C8 4-D5
M610	F5-11	Runout Press Motor	2-C8 4-C5
M611	F5-6	Fan Motor	4-E5
M701	F6-6	Clamp Unit Motor	2-D7 4-E5
M702	F6-3	50/100 Clamp Adjust Motor	2-D7 4-E5

Symbol	Index No.	Description	P to P
PCBs			
PCB1	F9-5	Main Control Board	1-C4 2-E3 3-C3 3-C8 5-A4
PCB2	F9-4	PSU	1-E6 3-F5
PCB3	F3-1	Binder Unit Control Board	1-D1
Switches			
SW1	F9-1	Left Door Switch	1-F4 2-B1 3-B4
SW2	F9-2	Right Door Switch	1-F4 2-B1 3-B4
Others			
BK1	F9-3	Breaker	1-B4
OT1	F9-7	Noise Filter	1-B6
OT2	F9-6	AC Relay	3-E5
Solenoid			
L302	F2-2	Pre-Punch Stopper Solenoid	2-D1 3-E5

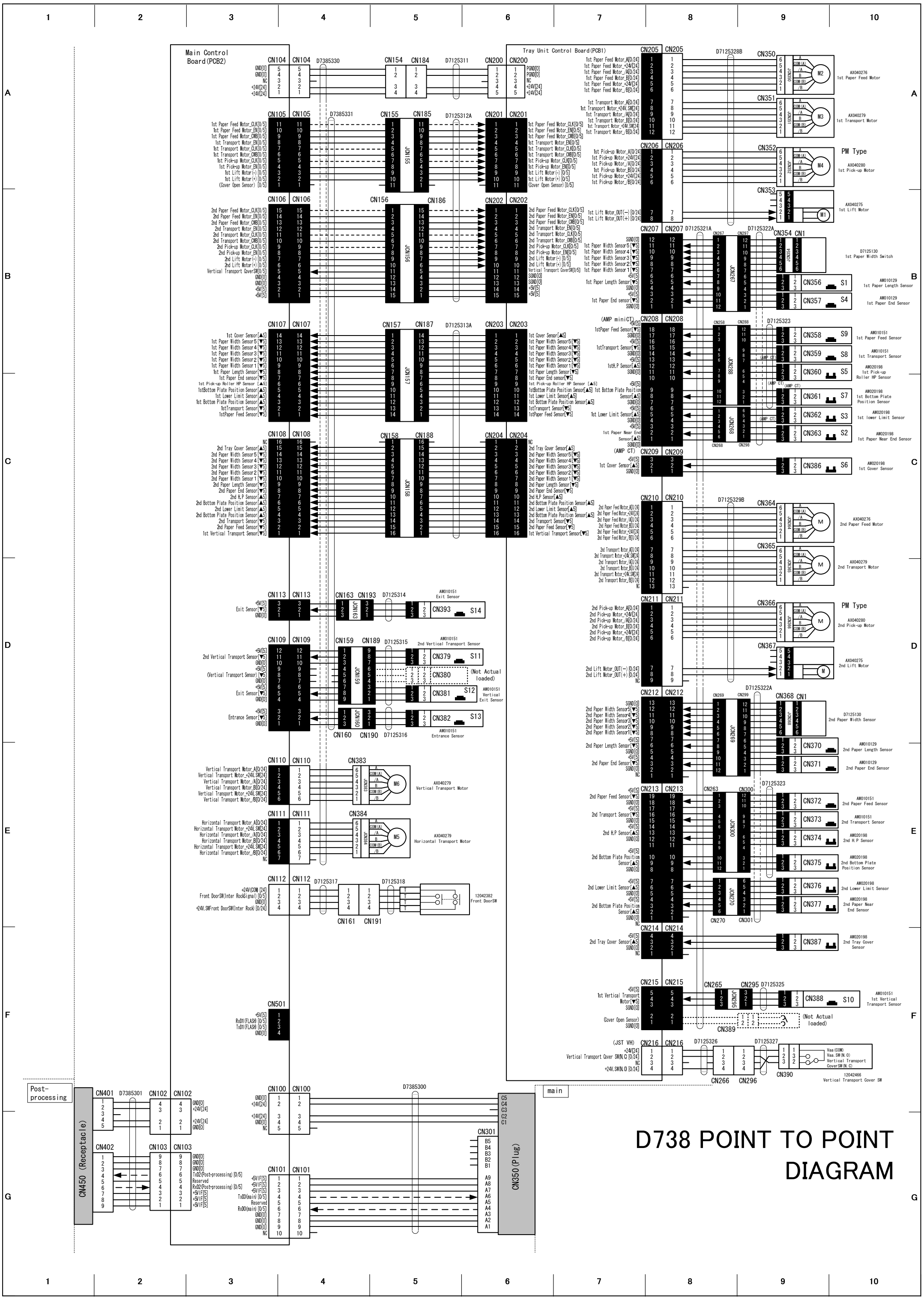
Main Control Board(PCB2)
Tray Unit Control Board(PCB1)
Post-processing
main
CN450 (Receptacle)
CN350(Plug)
PM Type
(Not Actual loaded)
D738 POINT TO POINT DIAGRAM

D738 ELECTRICAL COMPONENT LAYOUT (1/2)

Fig.-1

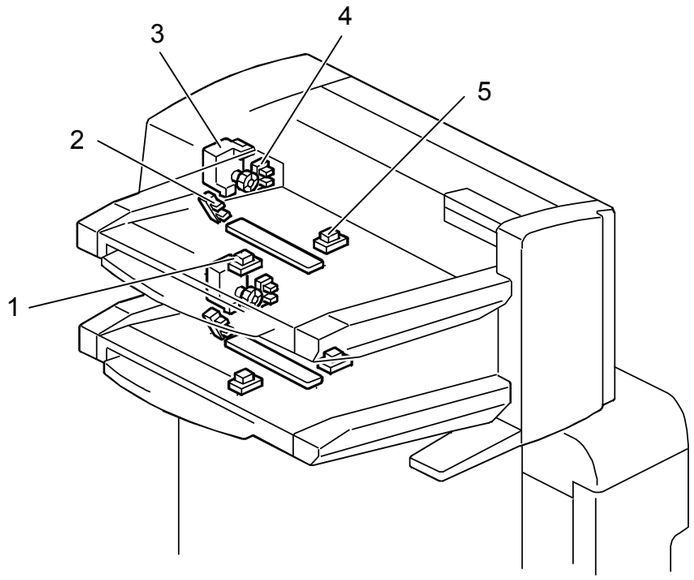

d1799105

Fig.-2

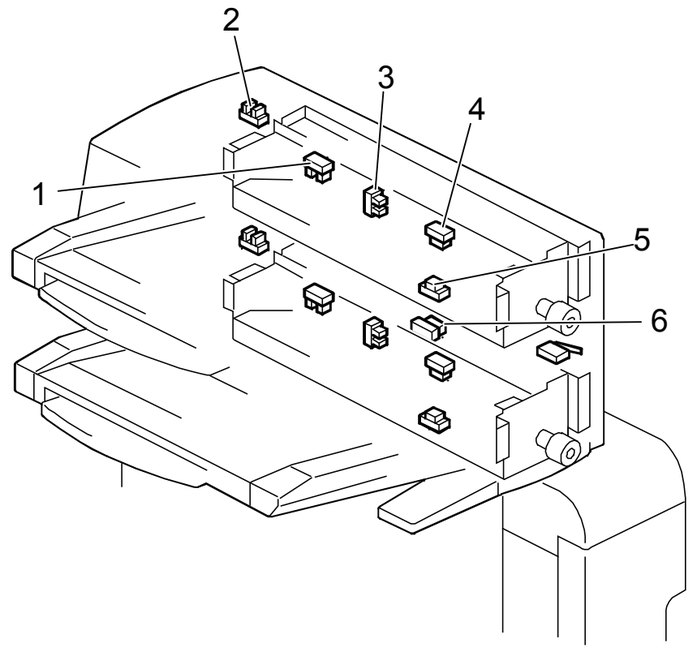

d1799106

Fig.-3

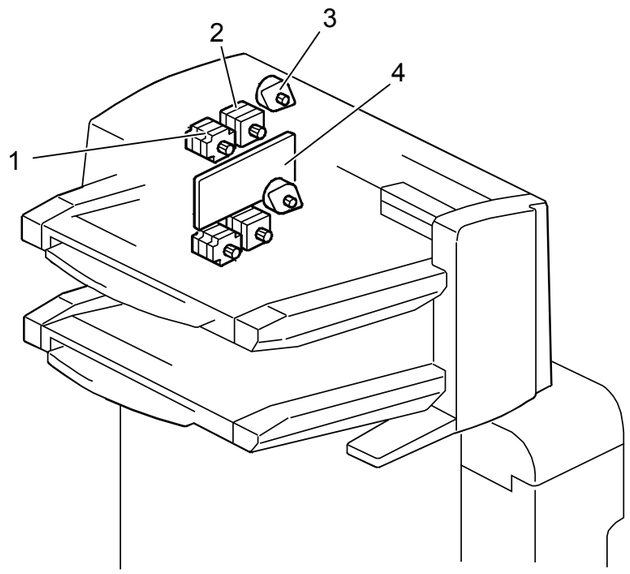

d1799107

Fig.-4

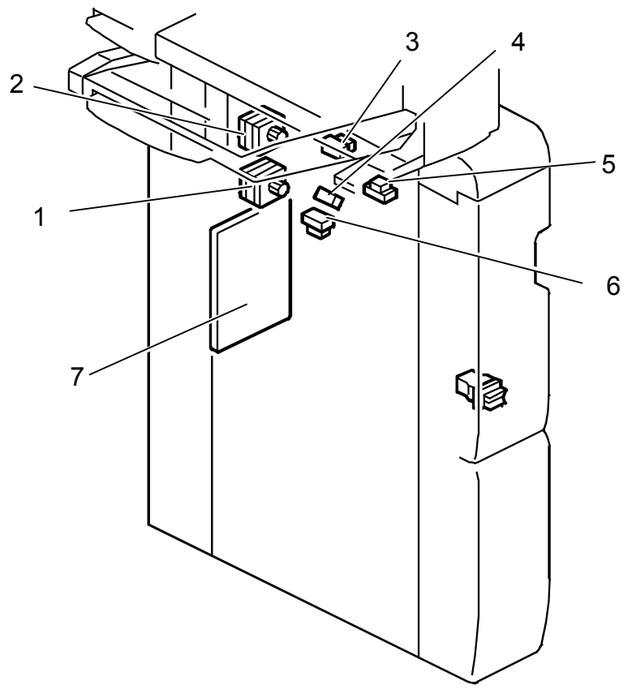

d1799108

D738 ELECTRICAL COMPONENT LAYOUT (2/2)

Symbol	Index No.	Description	P to P
Sensors			
S1	F1-1	1st Paper Length Sensor	B10
S2	F1-2	1st Paper Near End Sensor	C7 C10
S3	F1-4	1st Lower Limit Sensor	C10
S4	F1-5	1st Paper End Sensor	B10
S5	F2-1	1st Pick-up Roller HP Sensor	C3
S6	F2-2	1st Cover Sensor	C9
S7	F2-3	1st Bottom Plate Position Sensor	C10 E10
S8	F2-4	1st Transport Sensor	B10
S9	F2-5	1st Paper Feed Sensor	B10
S10	F2-6	1st Vertical Transport Sensor	F10
S11	F4-3	2nd Vertical Transport Sensor	D6
S12	F4-4	Vertical Exit Sensor	D6
S13	F4-5	Entrance Sensor	D6
S14	F4-6	Exit Sensor	D6
Motors			
M1	F1-3	1st Lift Motor	B10
M2	F3-1	1st Paper Feed Motor	A10
M3	F3-2	1st Transport Motor	A10
M4	F3-3	1st Pick-up Motor	A10
M5	F4-1	Horizontal Transport Motor	E5
M6	F4-2	Vertical Transport Motor	E5
PCBs			
PCB1	F3-4	Tray Unit Control Board	A7
PCB2	F4-7	Main Control Board	A3

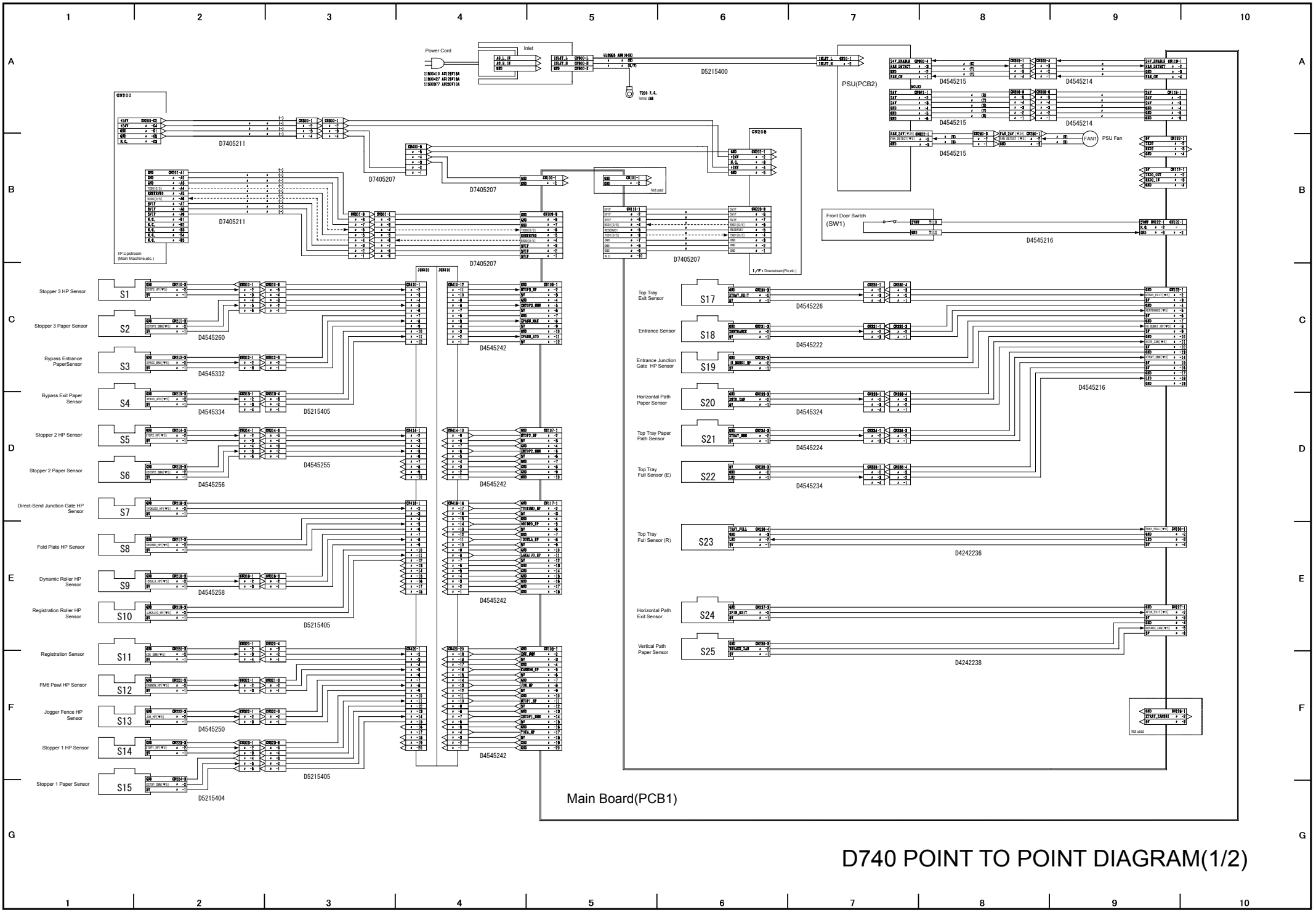

D740 POINT TO POINT DIAGRAM(1/2)

D740 ELECTRICAL COMPONENT LAYOUT (1/3)

Fig.-1

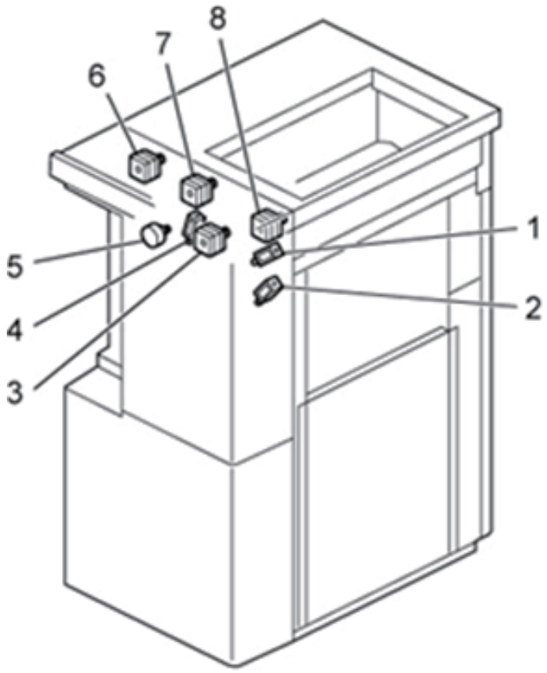

d7403080

Fig.-2

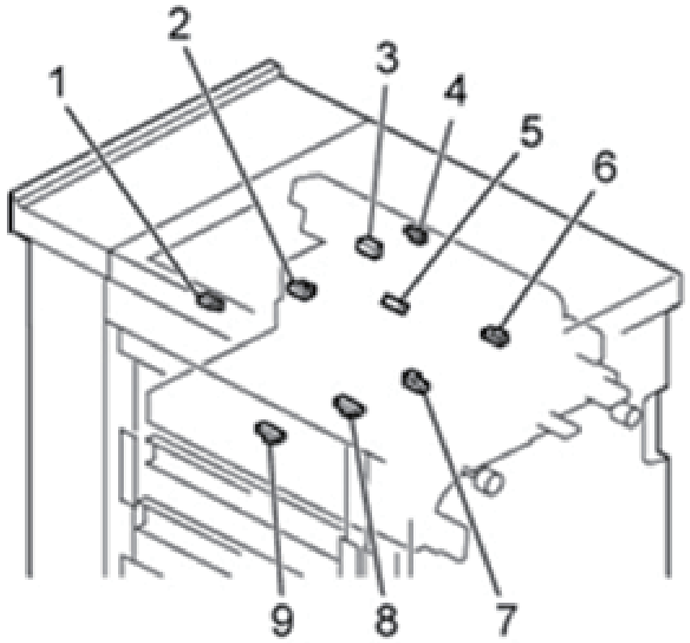

d7403081

Fig.-3

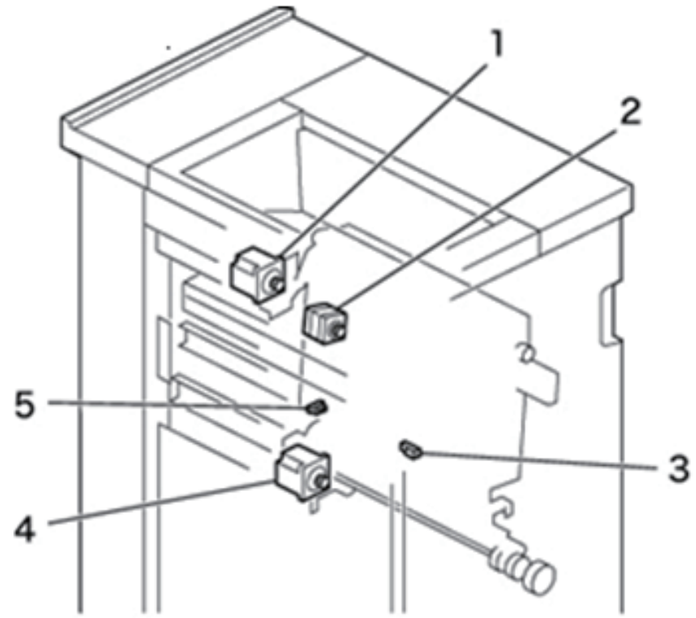

d7403082

Fig.-4

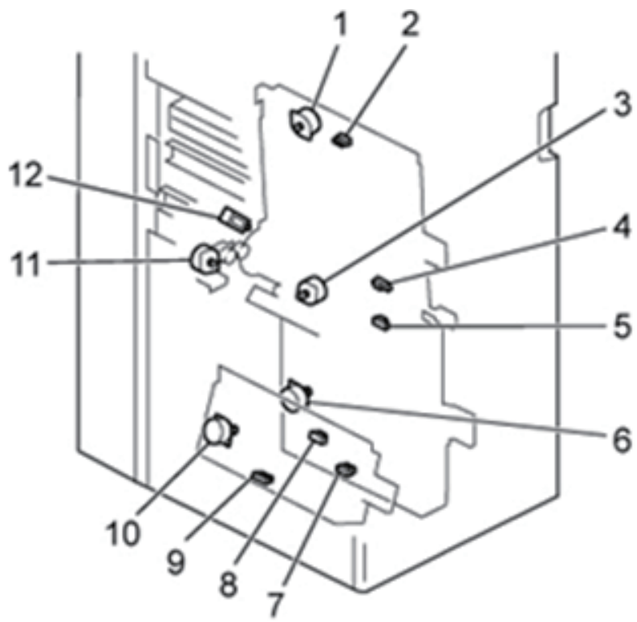

d7403083

Fig.-5

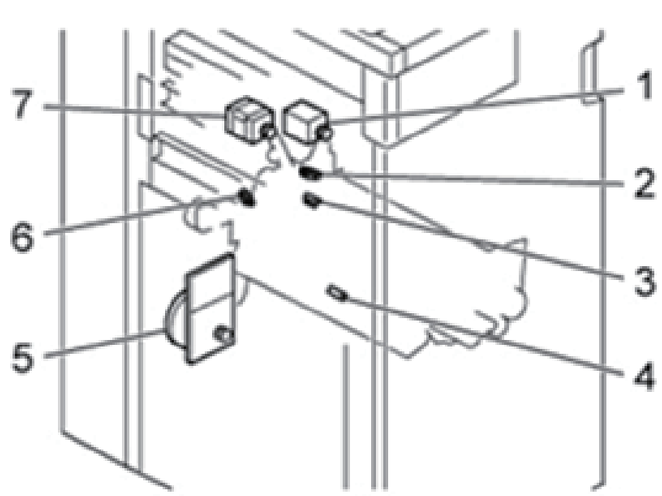

d7403084

Fig.-6

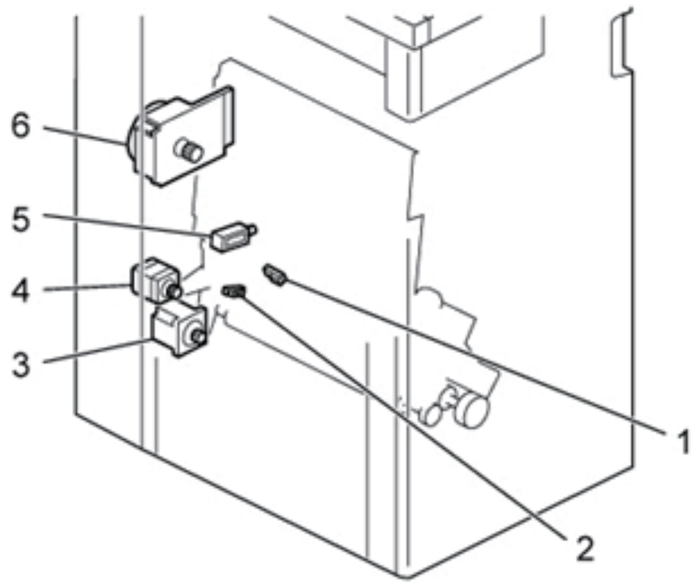

d7403085

D740 ELECTRICAL COMPONENT LAYOUT (2/3)

Fig.-7

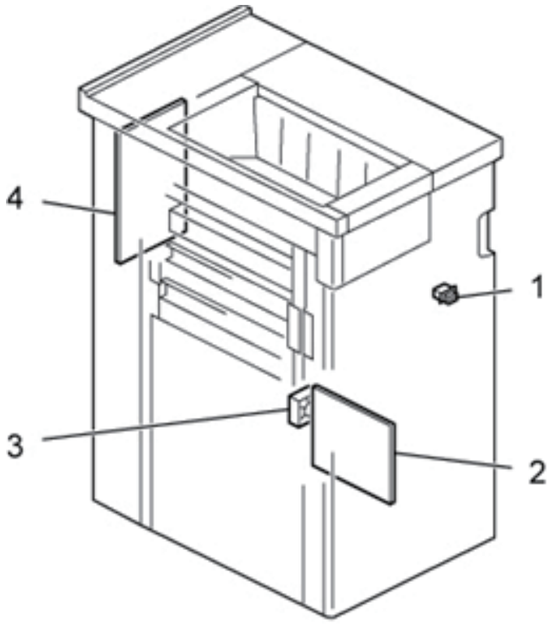

d7403080

D740 ELECTRICAL COMPONENT LAYOUT (3/3)

Symbol	Index No.	Description	P to P
Sensors			
S1	F4-9	Stopper 3 HP Sensor	1-C1
S2	F4-8	Stopper 3 Paper Sensor	1-C1
S3	F5-4	Bypass Entrance Paper Sensor	1-C1
S4	F6-1	Bypass Exit Paper Sensor	1-D1
S5	F4-2	Stopper 2 HP Sensor	1-D1
S6	F4-4	Stopper 2 Paper Sensor	1-D1
S7	F5-6	Direct-Send Junction Gate HP Sensor	1-D1
S8	F5-3	Fold Plate HP Sensor	1-E1
S9	F3-5	Dynamic Roller HP Sensor	1-E1
S10	F5-2	Registration Roller HP Sensor	1-E1
S11	F3-3	Registration Sensor	1-F1
S12	F6-2	FM6 Pawl HP Sensor	1-F1
S14	F4-7	Stopper 1 HP Sensor	1-F1
S15	F4-5	Stopper 1 Paper Sensor	1-G1
S17	F2-3	Top Tray Exit Sensor	1-C6
S18	F2-6	Entrance Sensor	1-C6
S19	F2-2	Entrance Junction Gate HP Sensor	1-C6
S20	F2-7	Horizontal Path Paper Sensor	1-D6
S21	F2-4	Top Tray Paper Path Sensor	1-D6
S22	F2-1	Top Tray Full Sensor (R)	1-E6
S23	F2-5	Top Tray Full Sensor (E)	1-D6
S24	F2-9	Horizontal Path Exit Sensor	1-E6
S25	F2-8	Vertical Path Paper Sensor	1-F6

Symbol	Index No.	Description	P to P
Motors			
M1	F1-5	Entrance Junction Gate Motor	2-A5
M2	F1-3	Top Tray Transport Motor	2-A5
M3	F1-6	Horizontal Transport Motor	2-B5
M4	F1-7	Top Tray Exit Motor	2-B5
M5	F5-5	1st Fold Motor	2-E9
M6	F4-3	Jogger Fence Motor	2-E5
M7	F1-8	Positioning Roller Motor	2-E5
M8	F4-6	Stopper 1 Motor	2-F5
M9	F3-4	Fold Plate Motor	2-F5
M10	F5-1	Registration Roller Release Motor	2-G5
M11	F3-1	Dynamic Roller Lift Motor	2-A10
M12	F4-1	Stopper 2 Motor	2-A10
M13	F3-2	Dynamic Roller Transport Motor	2-B10
M14	F5-7	Registration RollerTransport Motor	2-B10
M15	F4-11	Direct-Send Junction Gate Motor	2-C10
M16	F6-4	FM6 Pawl Motor	2-C10
M17	F4-10	Stopper 3 Motor	2-D10
M18	F6-3	2nd Fold Motor	2-D10
M19	F6-6	Crease Motor	2-D9

Symbol	Index No.	Description	P to P
PCBs			
PCB1	F7-4	Main Board	1-G5
PCB2	F7-2	PSU	1-B9
Switches			
SW1	F7-1	Front Door Switch	1-B7
Fan			
FAN1	F7-3	PSU Fan	1-B9
Solenoid			
SOL1	F1-4	Top Tray Junction Gate Solenoid	2-C5
SOL2	F1-2	Exit Junction Gate Solenoid	2-C5
SOL3	F1-1	Reverse Junction Gate Solenoid	2-C5
SOL4	F4-12	Leading Edge Stop Pawl Solenoid	2-D5

D741 POINT TO POINT DIAGRAM

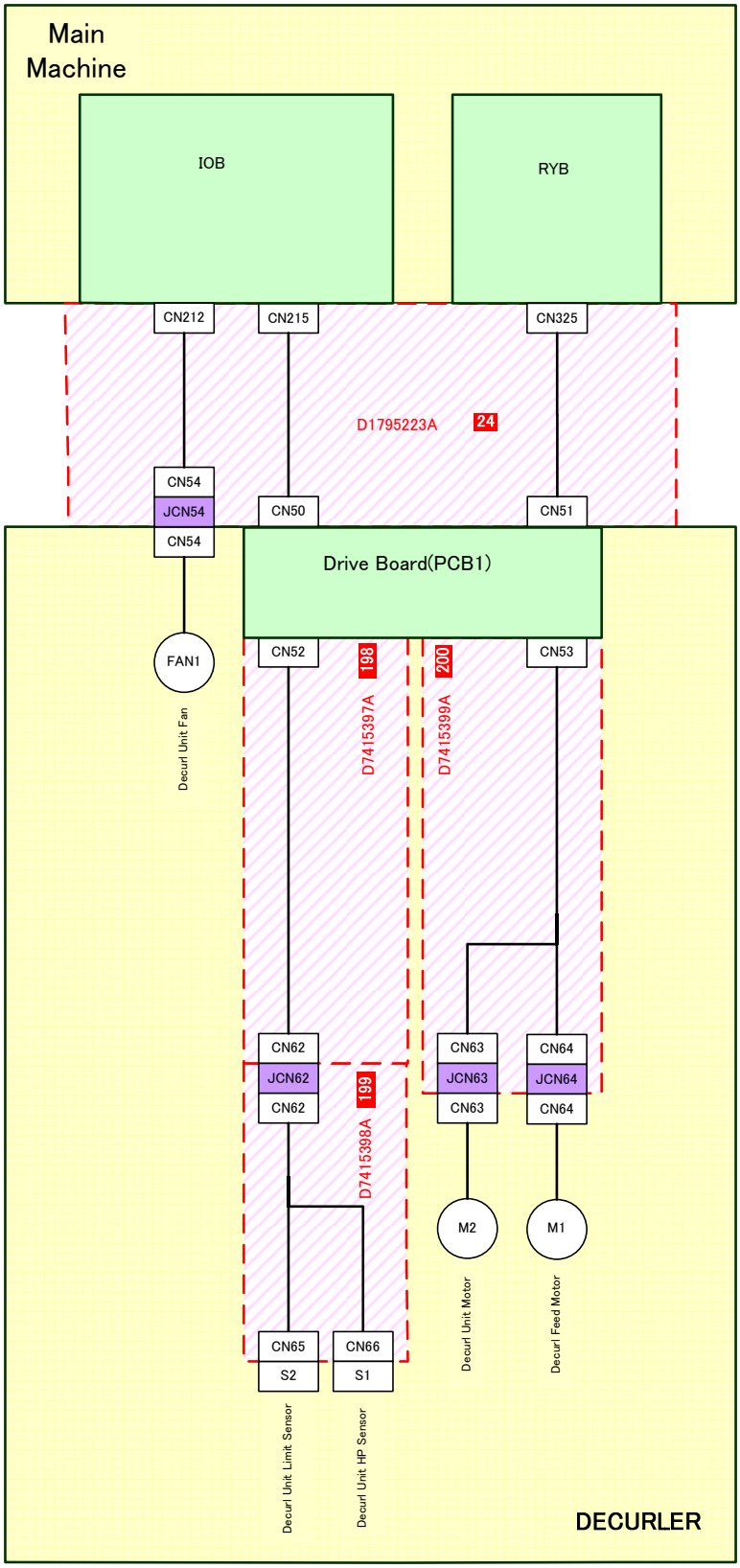

Pin Assignment

harness No	Connector (FROM)			Signal Information				Connector (TO)		
	To Connector	No	Pin No	Signal Name	Direction	L	H	No	Pin No	To Connector
24	IOB	CN212	1	24V	Power			3	CN54	Decurler Cooling Fan
			2	Lock Sensor	INPUT	ON	OFF	2		
			3	Drive	OUTPUT	ON	OFF	1		
			4	NC				-	-	NC
			5	NC						
			6	NC						
24	IOB	CN215	1	Decurler upper/under Switching Motor: Excitation switching	OUTPUT	2 Phase Excitation	1-2 Phase Excitation	19	CN50	Decurler Lift Motor
			2	Decurler upper/under Switching Motor:ERR	INPUT	Normal	Trouble	18		
			3	Decurler upper/under Switching Motor: Current switching	OUTPUT	ON	OFF	17		
			4	Decurler upper/under Switching Motor:Forward/Reverse	OUTPUT	CW	CCW	16		
			5	Decurler upper/under Switching Motor:CLK	OUTPUT			15		
			6	Decurler upper/under Switching Motor:Enable	OUTPUT	Normal	Sleep	14		
			7	Decurler Transport Motor:ERR	INPUT	Normal	Trouble	13		Decurler Transport Motor
			8	Decurler Transport Motor:Current switching	OUTPUT	ON	OFF	12		
			9	Decurler Transport Motor:Forward/Reverse	OUTPUT	CW	CCW	11		
			10	Decurler Transport Motor:CLK	OUTPUT			10		
			11	Decurler Transport Motor:Enable	OUTPUT	Normal	Sleep	9		
			12	Decurler Transport Motor_MODE	OUTPUT	2 Phase Excitation	1-2 Phase Excitation	8		
			13	Decurler Set Sensor	INPUT	Set	Not Set	7		Decurler Set Sensor
			14	Decurler Over-limit Sensor	INPUT	Normal	Over-limit	6		Decurler Over-limit Sensor
			15	Decurler HP Sensor	INPUT		Decurler HP	5		Decurler HP Sensor
			16	DDRB:GND	Ground			4		DDRB
			17	DDRB:Motor Reset	OUTPUT	OFF	ON	3		
			18	DDRB:GND	Ground			2		
			19	DDRB:5V	Power			1		
	RYB	CN325	1	DDRB:+24VS_Z3R	Power			1	CN51	DDRB
			2	DDRB:GND	Ground			2		
198	DDRB	CN52	1	GND	Ground			8	CN62	Set Sensor
			2	GND	Ground			7		Decurler HP Sensor
			3	DECU_HP_SNS_I	INPUT		HP	6		
			4	+5V_F	Power			5		
			5	GND	Ground			4		Decurler Limit Sensor
			6	DECU_OVR_SNS_I	INPUT	Normal	Over-limit	3		
			7	+5V_F	Power			2		
			8	DECU_SET_I	INPUT	Set	Not Set	1		Set Sensor
199	DDRB: Relay	CN62	1	DECU_SET_I				8	CN62	Set Sensor
			2	GND				3	CN66	Decurler HP Sensor
			3	DECU_HP_SNS_I				2		
			4	+5V_F				1		
			5	GND				3	CN65	Decurler Limit Sensor
			6	DECU_OVR_SNS_I				2		
			7	+5V_F				1		
200	DDRB	CN53	1	+24VS_Z3R_1st Tray	Power			5	CN64	Decurler Transport Motor
			2	DEC_HNS_STM_A	OUTPUT			6		
			3	DEC_HNS_STM_-A	OUTPUT			4		
			4	+24VS_Z3R_1st Tray	Power			2		
			5	DEC_HNS_STM_B	OUTPUT			3		
			6	DEC_HNS_STM_-B	OUTPUT			1		
			7	+24VS_Z3R_2nd Tray	Power			6	CN63	Decurler Lift Motor
			8	DEC_UD_STM_A	OUTPUT			5		
			9	DEC_UD_STM_-A	OUTPUT			4		
			10	+24VS_Z3R_2nd Tray	Power			3		
			11	DEC_UD_STM_B	OUTPUT			2		
			12	DEC_UD_STM_-B	OUTPUT			1		
			2	-				2	-	NC
			3	-				3		
			4	-				4		
			5	-				5		

D741 ELECTRICAL COMPONENT LAYOUT

Fig.-1

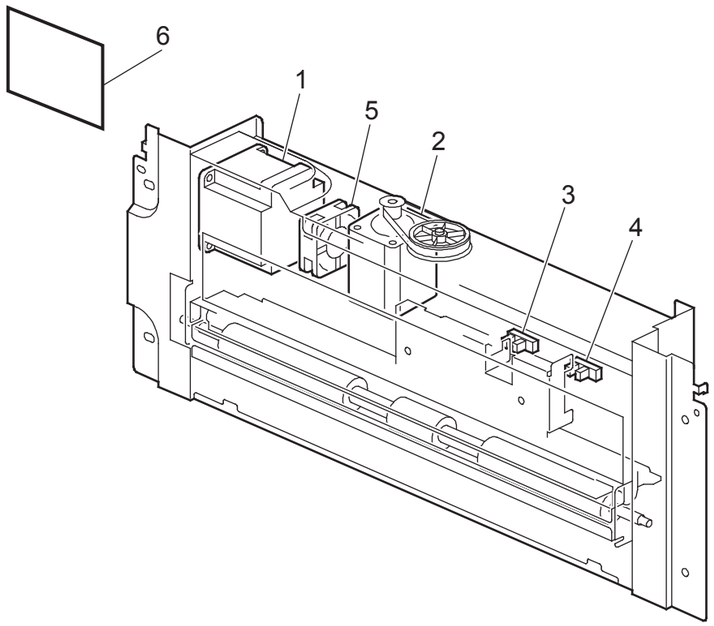

D1799174_2.WMF

Symbol	Index No.	Description	P to P
Sensors			
S1	3	Decurl Unit HP Sensor	G6
S2	4	Decurl Unit Limit Sensor	G5
Motors			
M1	1	Decurl Feed Motor	F7
M2	2	Decurl Unit Motor	F6
Fan			
FAN1	5	Decurl Unit Fan	D4
PCB			
PCB1	6	Drive Board	C6