M0A0 POINT TO POINT DIAGRAM（1 / 1）

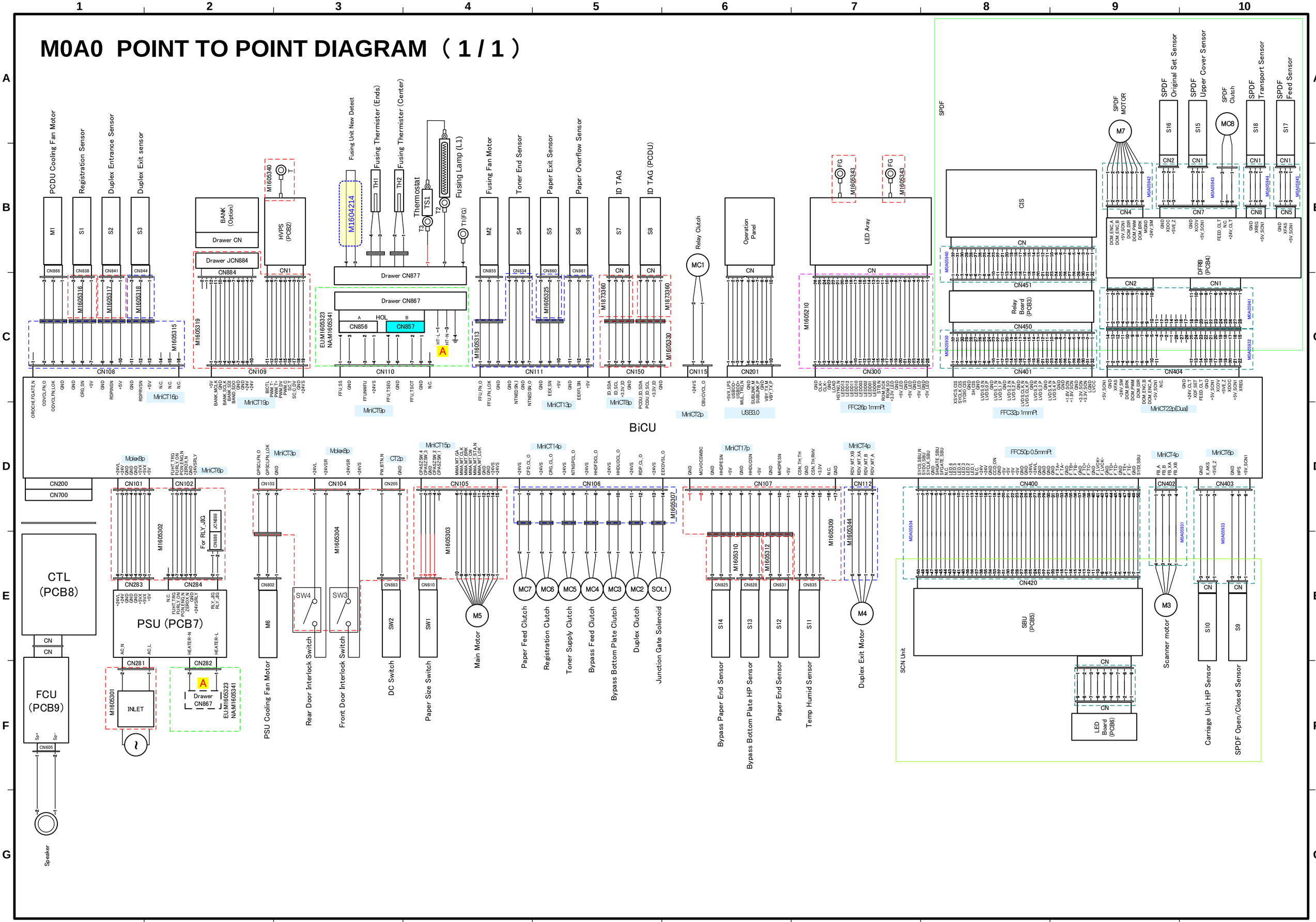

M0A0 ELECTRICAL COMPONENT LAYOUT

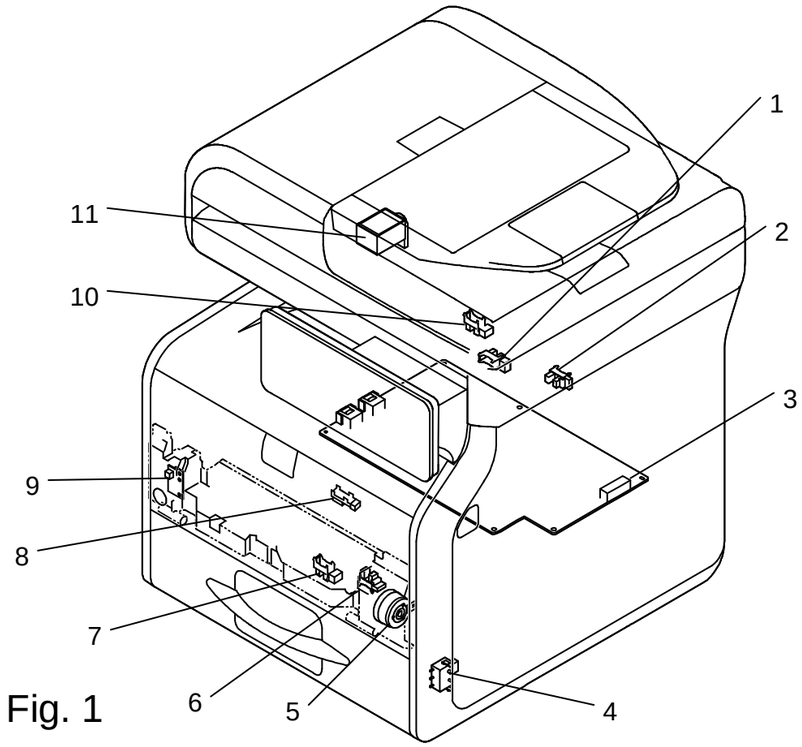

Fig. 1

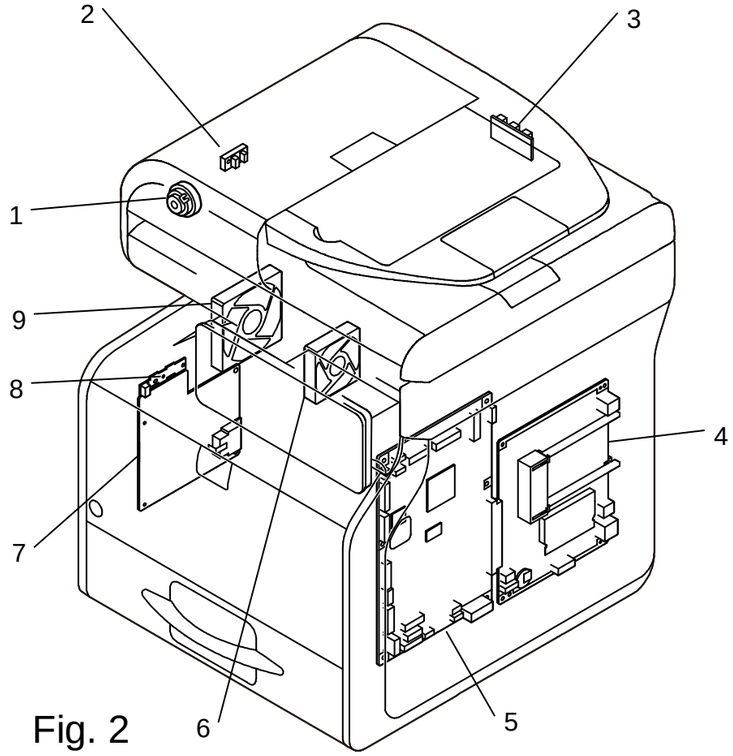

Fig. 2

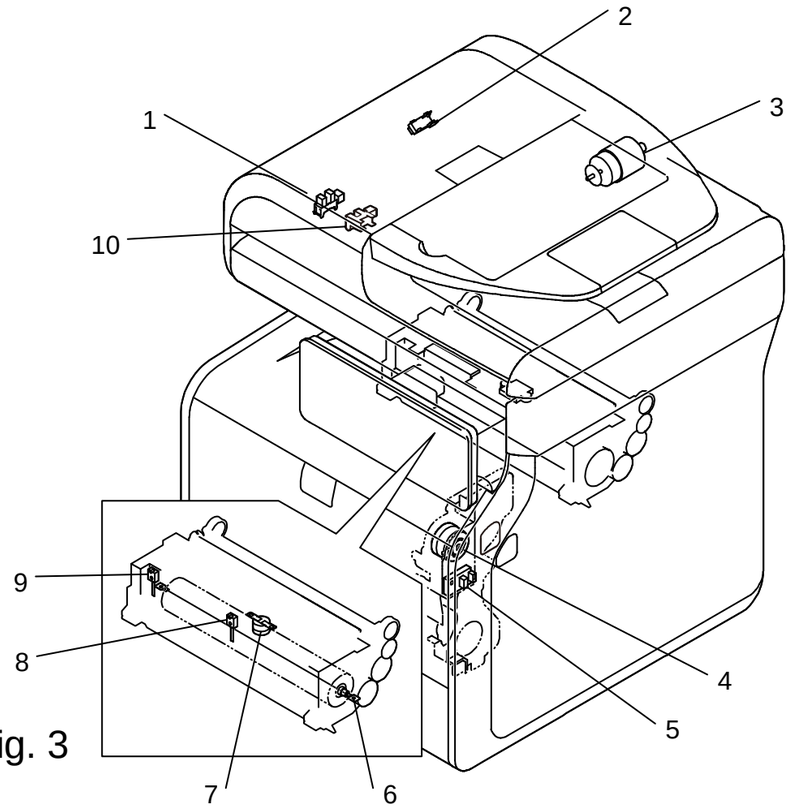

Fig. 3

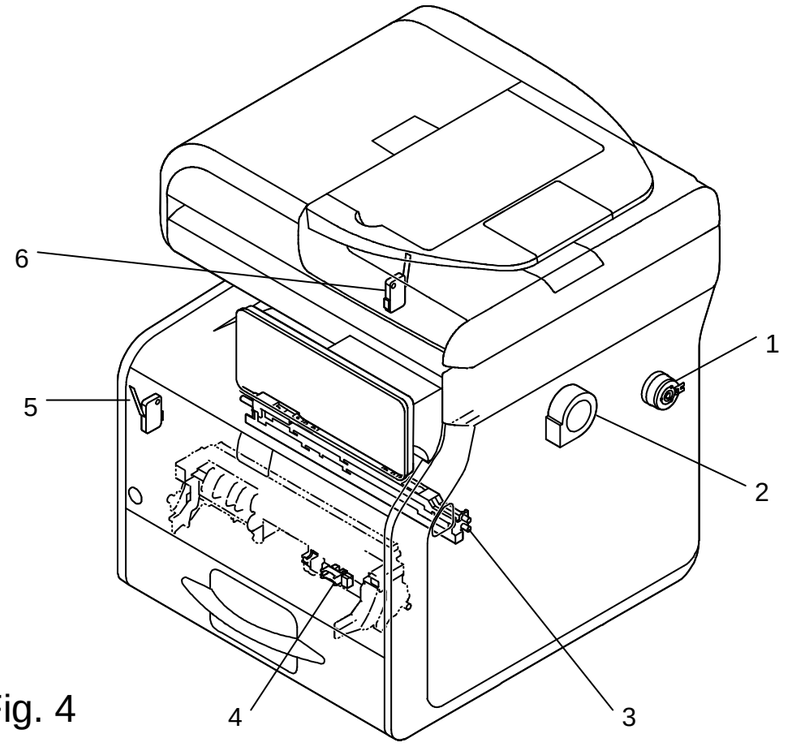

Fig. 4

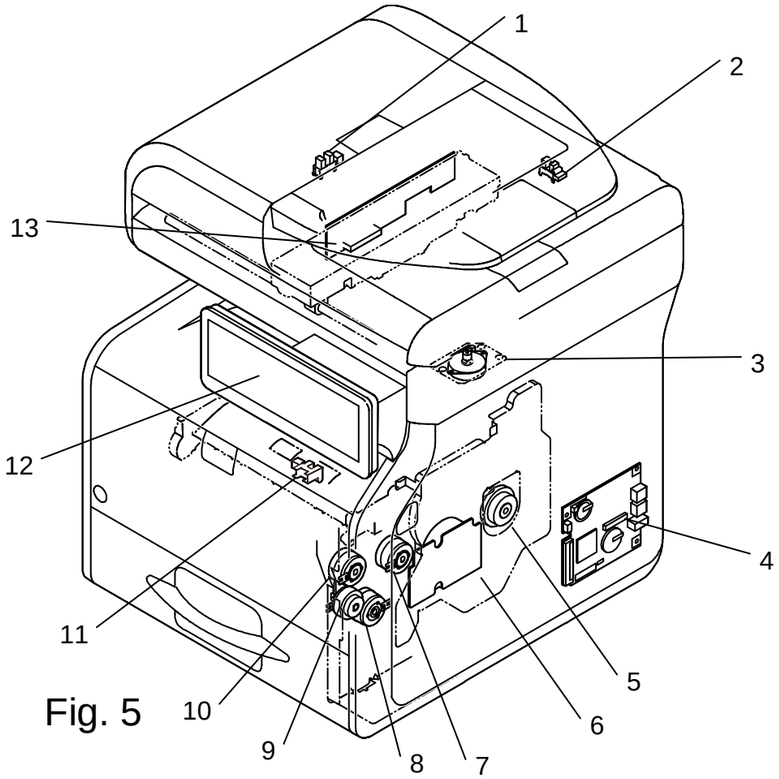

Fig. 5

M0A0 ELECTRICAL COMPONENT LAYOUT

Symbol	Index No.	Description	P to P
Motors			
M1	Fig.4-2	PCDU Cooling Fan Motor	1-B1
M2	Fig.2-9	Fusing Fan Motor	1-B4
M3	Fig.5-3	Scanner Motor	1-E10
M4	Fig.4-1	Duplex Exit Motor	1-E7
M5	Fig.5-6	Main Motor	1-E4
M6	Fig.2-6	PSU Cooling Fan Motor	1-E2
M7	Fig.3-3	SPDF Motor	1-A9
Magnetic Clutchs			
MC1	Fig.5-9	Reray Clutch	1-B6
MC2	Fig.5-5	Duplex Clutch	1-E5
MC3	Fig.1-5	Bypass Bottom Plate Clutch	1-E5
MC4	Fig.5-10	Bypass Feed Clutch	1-E5
MC5	Fig.3-4	Toner Supply Clutch	1-E5
MC6	Fig.5-7	Registration Clutch	1-E5
MC7	Fig.5-8	Paper Feed Clutch	1-E5
MC8	Fig.2-1	SPDF Clutch	1-A10
Sensors			
S1	Fig.1-8	Registration Sensor	1-B1
S2	Fig.5-11	Duplex Entrance Sensor	1-B1
S3	Fig.1-10	Duplex Exit sensor	1-B2
S4	Fig.2-8	Toner End Sensor	1-B5
S5	Fig.1-1	Paper Exit Sensor	1-B5
S6	Fig.1-2	Paper Overflow Sensor	1-B5
S7	-	ID TAG	1-B5
S8	-	ID TAG (PCDU)	1-B6
S9	Fig.5-2	SPDF Open/Closed Sensor	1-E10
S10	Fig.5-1	CarriageUnit HP Sensor	1-E10
S11	Fig.3-5	Temp Humid Sensor	1-E7
S12	Fig.4-4	Paper End Sensor	1-E6
S13	Fig.1-7	Bypass Bottom Plate HP Sensor	1-E6
S14	Fig.1-6	Bypass Paper End Sensor	1-E6
S15	Fig.3-10	SPDF Upper Cover Sensor	1−A10
S16	Fig.3-1	SPDF Original Set Sensor	1−A9
S17	Fig.3-2	SPDF Feed Sensor	1−A10
S18	Fig.2-2	SPDF Transport Sensor	1−A10
Switches			
SW1	Fig.1-4	Paper Size Switch	1-E4
SW2	Fig.1-9	DC Switch	1-E4
SW3	Fig.4-5	Front Door Interlock Switch	1-E3
SW4	Fig.4-6	Rear Door Interlock Switch	1-E3

Symbol	Index No.	Description	P to P
Solenoids			
SOL1	Fig.1-11	Junction Gate Solenoid	1-E6
PCBs			
PCB1	Fig.2-5	BiCU	1-D1
PCB2	Fig.2-7	HVPS	1-B3
PCB3	-	Relay Board	1-C8
PCB4	Fig.2-3	DFRB	1-B9
PCB5	Fig.5-13	SBU	1-E8
PCB6	-	LED Board	1-F9
PCB7	Fig.1-3	PSU	1-E2
PCB8	Fig.2-4	CTL	1-E1
PCB9	Fig.5-4	FCU	1−F1
Thermistors			
TH1	Fig.3-9	Fusing Thermister (Ends)	1-B4
TH2	Fig.3-8	Fusing Thermister (Center)	1-B4
Thermostats			
TS1	Fig.3-7	Thermostat	1−B4
Lamps			
L1	Fig.3-6	Fusing Lamp	1−B4
Others			
-	Fig.5-12	Operation Panel	1-B6
-	Fig.4-3	LED Aray	1-B7