OKIFAX 5650

Maintenance Manual

First Edition

Note: Throughout this manual there are many references to the G4/ ISDN option. This option is not available in the U.S. or CANADA.

January, 2001

Oki Data Corporation

PREFACE

This manual is intended to be used for installing and maintaining OKIFAX 5650 facsimile transceiver.

Maintenance of the OKIFAX 5650 is assumed to be conducted at the following levels:

- Assembly-level maintenance for mechanical portions
- Unit-level maintenance for electrical at portions

CAUTION: DANGER OF EXPLOSION IF BATTERY IS INCORRECTLY REPLACED. REPLACE ONLY WITH THE SAME OR EQUIVALENT TYPE RECOMMENDED BY THE MANUFACTURER. DISCARD USED BATTERIES ACCORDING TO THE MANUFACTURER'S INSTRUCTIONS
and
ATTENTION: IL Y A DANGER D'EXPLOSION S'IL Y A REMPLACEMENT INCORRECT DE LA BATTERIE. REMPLACER UNIQUEMENT AVEC UNE BATTERIE DU MEME TYPE OU D'UNT TYPE RECOMMANDE PAR LE CONSTRUCTEUR. METTRE AU REBUT LES BATTERIES USA GEES CONFORMEMENT AUX INSTRUCTIONS DU FABRICANT.

Programming procedures of the following uses's functions are not described in this maintenance manual.
Please refer to user's guide.

- One-touch key programming
- Two-digit auto dial programming
- Group setting
- Programming mail box password
- Memory operation

© Copyright 2001 Oki Data Corporation
This manual is subject to alteration without prior notification.

CONTENTS

1. GENERAL INFORMATION 7

1.1 General Performance 7
1.2 General User's Function 10
1.3 General Maintenance Functions 13
1.4 General Appearance 14
1.5 Basic Performance Specifications 16
1.6 Reports and Lists 26
1.7 Configuration 47
1.7.1 Print conditions 47
1.7.2 Report image 49
1.8 Telephone Directory 38
1.8.1 Print conditions 38
1.9 Self Diagnosis Repor 55
1.9.1 Print conditions 55

2. INSTALLATION PROCEDURE 72

2.1 Setup Information 72
2.1.1 General 72
2.1.2 Site Selection 74
2.1.3 Unpacking 76
2.1.4 Identification Contents 79
2.1.5 Installation of Attachments 80
2.1.6 AC Cord Connection 85
2.1.7 Telephone and Line Connections 86
2.1.8 Packing for Shipment 86
2.2 Programming and Initial Settings 87
2.2.1 Initial Settings 87
2.3 Installation of Optional Units 157

3. BRIEF THCHNICAL DESCRIPTION 167

3.1 Fundamentals of the Electro-Photographic Process 168
3.2 Actual Electro-photographic Process 170
3.3 Boards and Units 171
3.3.1 Boards and Units 171
3.4 Overall Dimension and Mechanical Structure 173

4. MECHANICAL DISASSEMBLY AND REASSEMBLY 174

4.1 Precautions for Parts Replacement 174
4.2 Tools 176
4.3 How to Disassemble and Reassemble 176
4.3.1 LED Print Head 179
4.3.2 ID Unit, Rear Cover, NCU Cover, Main Cover, Separation Plate, NCU Board, Modem Board 180
4.3.3 Control Panel Assembly, Paper Guide (U) Assembly 182
4.3.4 Sub-roller, ADF Roller Assembly, Pinch Roller, Contact Image Sensor, Document Detectors (PC1 and PC2). 184
4.3.5 Resist Motor, Drum Motor, Release Guide Assembly, Manual Guide Assembly, Stacker Cover, Fusing Unit 186
4.3.6 Lower Base, Motor Assembly, Back-up Roller, Transfer Roller 188
4.3.7 Resist Roller, Hopping Roller, Sensor Plates 190
4.3.8 MCNT Board, Power Supply Unit, Contact Assembly 192

5. ADJUSTMENTS 193

5.1 Setting of LED Print Head Drive Time 193
5.2.1 Confirmation Items 194
5.2.2 Measurement 195

6. CLEANING AND MAINTENANCE 197

6.1 Replacement of Consumable Parts 197
6.2 Routine Inspection 199
6.3 Printer Counter Display/Clear 201
6.3 Printer Counter Display/Clear 201
6.5 Self-diagnosis Test 203
6.4 Printer Counter Display/Clear 203
6.5 Local Test 204
6.6 Sensor Calibration Test 206
6.7 LED Test 208
6.8 Tone Send Test 209
6.9 High-speed Modem Send Test 212
6.10 High-speed Modem Receive Test 212
6.11 MF Send Test 213
6.12 Tone (TEL/FAX) 214
6.13 Protocol Dump Data Printing 215
6.14 System Reset 219
6.15 Service Code 220

7. TROUBLESHOOTING AND REPAIR FOR OKIFAX 5650 235

7.1 Overall Troubleshooting Flow Chart 237
7.2 No LCD Operation 238
7.3 ALARM LED On 239
7.4 Printing Test Failure 240
7.5 No Local Copy 241
7.6 Auto Dial Failure 242
7.7 Transmission Problem 243
7.8 Auto Reception Failure 245
7.9 Reception Problem 246
7.10 Sensor Calibration Test 247
7.11 LED Test 248
7.12 Tone Send Test 249
7.13 High-speed Modem Test 250
7.14 MF Send Test 252
7.15 Tone (TEL/FAX) Send Test 253
7.16 No Acoustic Line Monitor 254
7.17 Low Power Supply Unit (LPSU) 255
7.18 High Power Supply Unit (HO8 board) 255
7.19 No Document Feeding 257
7.20 Multiple Document Feeding 258
7.21 Document Skew 259
7.22 Document Jam 261
7.23 Printer Unit 262
7.23.1 Precautions 262
7.23.2 Troubleshooting Flow Charts of Printer Unit 263

APPENDIX A PC BOARD DESCRIPTION AND OPERATION 279

APPENDIX B DESCRIPTIONS OF PRINT OPERATION 370

APPENDIX C CIRCUIT DIAGRAMS AND BLOCK DIAGRAMS 388

APPENDIX D MECHANICAL EXPANDED VIEW DRAWING AND PARTS LIST ... 433

APPENDIX E NOT USED AT THIS TIME 449

APPENDIX F SECOND PAPER FEEDER MAINTENANCE MANUAL 450

1. GENERAL INFORMATION

1.1 General Performance

(1) Type of appearance
- Desktop type

(2) Applicable lines
- Public switched telephone network (PSTN)
- Private branch exchange (PBX)
- Integrated service digital network (ISDN)

Note : ISDN is optopn.

(3) Compatibility
- ITU-T Group 3 facsimile transceiver
- ITU-T Group 4 facsimile transceiver

(4) Document width
- Max. 216 mm (NA Letter)
- Max. 208 mm (ISO A5 size)

(5) Effective reading width
- NA Letter : 215.1 mm maximum (ODA)
  211.2 mm maximum for Local Copy (ODA)
- ISO A4 : 208.0 mm maximum (OEL, INT'L)
  202.8 mm maximum for Local Copy (OEL, INT'L)

(6) Scanning length
- 128 mm to 356 mm

Length setting : Unlimited (1500 mm) is also available.

(7) Automatic document feeder (ADF)
- 30 sheets (NA Letter/A4-size: 20-lb/75gm Oki Data recommended paper)
- 15 sheets (NA Letter/A4-size: 13 to 28-lb/49 to 105gm)

Note: NA is North America

(8) Recording paper or sheet
- First cassette : NA Letter/NA Legal/A4-size plain paper cut
  250 sheets capacity (20-lb/75gm*)
- Second cassette (Option) : NA Letter/NA Legal/A4-size plain paper cut
  500 sheets capacity (20-lb/75gm*)
- Manual loading feeder : Transparency for overhead projector, applicable.
  Sheet size: NA Letter/NA Legal/A4-size
  *: Oki Data recommended paper

(9) Printable width
- NA Letter : 211.3 mm (203.2 mm for assured quality)
- NA Legal : 211.3 mm (203.2 mm for assured quality)
- ISO A4 : 206.0 mm (197.3 mm for assured quality)

(10) Printable length
- NA Letter : 273.4 mm (266.7 mm for assured quality)
- NA Legal : 349.6 mm (342.9 mm for assured quality)
- ISO A4 : 291.0 mm (284.3 mm for assured quality)

(11) Copy stacker
- Max. 100 sheets (20-lb/75gm)

****Note 1:*** Oki Data recommended paper
2: Face down stacking

(12) Scanning resolution

a) Horizontal :

• 300 dots/inch

b) Vertical :

Transmission mode : 3.85 line/mm (STD), 7.7 line/mm (FINE), 15.4 line/mm (EX.FINE) or 300 dot/inch (EX.FINE)

COPY mode : 7.7 line/ mm(FINE) or 300 dot/inch(EX.FINE)

Note : 300 dpi ∞ 300 dpi (Transmission is available.)

(13) Scanning method

• 2592 bits contact image sensor

(14) Recording resolution

a) Horizontal :

300 dots/inch

b) Vertical :

Variable : Automatically adjusted to the paper length. (300 to 395 dot/inch), STD mode (3.85 to 5.06 line/mm) and FINE mode (7.7 to 10.13 line/mm) and EX-FINE mode (15.4 to 20.24 line/mm)

Fixed :

STD mode	: 3.85 line/mm
FINE mode	: 7.7 line/mm
EX-FINE mode	: 15.4 line/mm, 300 dot/inch
PC-Print	: 300 dot/inch

(15) Recording method

• 211.3 mm (2496 bit) or 216.7 mm (2560 bit)

(16) Minimum scan line time for reception

• When receiving from OKIFAX or ECM :	0 ms
• When receiving from non- OKIFAX and non ECM :	10 ms at 3.85 line/mm 5 ms at 7.7 line/mm

(17) Print speed

• Max. 8 sheets per minute

(18) Pre-heating time

• Approx. 20 sec. (standby print)

(19) Coding scheme

• Modified Huffman (MH)
• Modified READ (MR)
• Modified Modified READ (MMR)

(20) Modem

• ITU-T Rec. V.29 :	9600 bps for use on point-to-point 4-wire leased telephone type circuit
• ITU-T Rec. V.27 ter :	4800 bps modem for use in PSTN (Public Switched Telephone Network)
• ITU-T Rec. V.21 channel 2 :	300 bps duplex modem for PSTN
• ITU-T Rec. V.17 :	2-wire modem for fax application up to 14.4 kbps
• ITU-T Rec. V.34 :	

Note: A modem operating at data signalling rates of up to 33600 bit/s for use on the general switched telephone network and on leased point-to-print 2-wire telephone-type circuits.

(21) Transmission speed
- 3 sec. at 33.6 Kbps per sheet of ITU-T No. 1 evaluation test chart

Note: This speed denotes the time interval corres ponding to phase C (message transmission phase) as refferred to ITU-T T.30.

(22) Protocol
- ITU-T Rec. T.30
- ITU-T Rec. G4 Class 1 (Option)
- OKI special protocols: High-speed protocol (G3)

(23) Error correction mode (ECM)
- ITU-T ECM

(24) Communication mode
- Half duplex

(25) Memory capacity
- Basic model : 2.5 M byte
- Optional memory : 2.0/4.0 M byte memory board can be added.

(26) Liquid crystal display (LCD)
- Two rows of 20 characters for operation guidance, check and various kinds of information

(27) Power source
- Nominal input voltage 120 VAC for ODA version
- Nominal input voltage 230 VAC for INT'L version

(28) MFP (Multi- Function Peripheral) PC Interface kit (option)
- By installing the optional board (CTR board), the MFP function can be realized:
  PC Printer Function
  PC Scanner Function
  PC FaxModem Function

Note: For details, see "OKIFAX 5650 Product Specification for MFP"
Hardware is standard and software is option for Bi-Centro interface.

(29) Fax2Net : Provider type (option)
The following functions are available.
- Fax over IP
- Fax to E-mail
- Virtual E-mail
- Broadcast
- Web Retrieval
- Prepaid and Registration

Note: For details, see "OKIFAX 5650 Product Specification for Fax2Net".

(30) ISDN G4 function (option)
- G4 function
- ISDN G4 : Communication
- ISDN G3 : Communication
- ISDN : Report and List

Note: For details, see Appendix H "ISDN G4 option system specification".

1.2 General User's Function

(1) Transmit mode
- Automatic transmit mode
- Manual transmit mode

(2) Receive mode
- Automatic receive mode
- Manual receive mode
- TEL/FAX automatic switchover mode
- TAD mode
- Memory only receive mode
- Forwarding mode
- PC receive mode (This function is the standard for ODA)

(3) Dual access

(4) Voice request

(5) Automatic redial

(6) Last number redial (Manual redial)

(7) Local copy including multiple copies
- 99 copies max

(8) Sender identification (Sender ID)

(9) Personal identification (Personal ID)

(10) Polling transmission
- Feeder polling transmission
- Memory polling transmission

(11) Polling reception
Bulletin Poll transmission (when Boxnumber is opened.)

(12) Selective polling
- 16 boxes

(13) Acoustic line monitor (only TX mode)
- 5 level selectable

(14) Telephone handset (option)

(15) Automatic alternate selecting call (FAX No. + FAX No. can be registered in one-touch keys).

(16) Delayed transmission (Max. 3 days)
- Delayed broadcast
- Delayed transmission
  20 specified times

(17) Relay broadcast initiate
- Feeder relay broadcast initiate
- Memory relay broadcast initiate

(18) Subaddress transmission

(19) Confidential message transmission (Hopper 1 station)

(20) Confidential message reception
- 16 mail boxes

(21) PHOTO mode (Half-tone transmission)
- 64 scale gradations

(22) G3 sequential broadcast (Memory)
- Broadcast mode
  200 stations at maximum
- Delayed broadcast mode

(23) No paper/no toner reception (Memory)

(24) Memory-only reception
(Memory reception even if paper does not run out)

(25) Distinguishing Text from picture

(26) Page re-transmission (Only in case of memory TX mode)

(27) Vertical reduction printing (Reduction rate is from 100% to 75%)

(28) Horizontal reduction (RX, Copy: Reduction rate is from 93% to 98%)

(29) Smoothing printing (In case of 8 dot/mm ∞ 3.85, 7.7 or 15.4 line/mm ∅ 300 dot/inch ∞ 784 line/inch)
- Turn off in the PC print mode

(30) Programmed key operation (“F” key + “OT” key)

(31) Auto dialing
- One-touch dialing 40 locations
- Three-digit automatic dialing 150 locations
- Keypad dialing
- Chain dialing
- Mixed dialing
- Group dialing 20 dialing groups (190 locations)

(32) Realtime dialing
(In case of optional handset is installed or Hook key)

(33) Automatic pause signal insertion

(34) Manual feeder local copy

(35) Telephone directory (Alpha search) dialing

(36) TEL/FAX automatic switching

(37) Time and date printing

(38) Closed users group (Direct mail rejection)

(39) Transmission contrast and resolution control

(40) Key touch tone

(41) Printer counter display (For drum, toner, total print)

(42) Total page counter (Scan)

(43) Quick scanning 3 sec. minimum ∅ A4 size 3.85 /mm

(44) Time and date setting

(45) PC interface (option)
- Standard: ODA version
- Option: INT'L version

(46) Language selection
- 2 languages (LCD and Reports)

(47) Fax fowarding

(48) 4 digit indication of YEAR

(49) Memory password programming

(50) Fax network programming

(51) Fax2Net service

(52) Restrict ID programming

(53) ISDN programming

(54) Reports
- Activity report
- Protocol report (Service man setting)
- Message confirmation report (Single address or multiple addresses)
- Broad cast entry report (Broadcast)
- Transmission error report
- Confidential reception report
- Configuration report
- Telephone directory
- Power outage report
- Log report
- G4 Log.report

1.3 General Maintenance Functions

1) Local tests

(1) Self-diagnosis
- CPU ROM/RAM check
- FLASH (/MASK) memory check (Program, Language, Default)
- Modem version
- RAM check
- RAM check (MEMORY board: option)
- PC-IF board (parallel) check
- ISDN board (option) : CPU ROM/RAM check
- Print test

(2) Sensor calibration (Adjustment of scanning level)

(3) LED test

(4) Tone send test (When NCU board is installed.)

(5) Multi-frequency (MF) send test (When NCU board is installed.)

(6) High-speed modem send test (When NCU board is installed.)

(7) High-speed modem receive test (When NCU board is installed.)

(8) Tone (TEL/FAX) test (When NCU board is installed.)

(9) Loop back 1 (When ISDN option board is installed.)

(10) Loop back 2 (When ISDN option board is installed.)

(11) INFO 00 sending (When ISDN option board is installed.)

(12) INFO 01 sending (When ISDN option board is installed.)

(13) INFO 03 sending (When ISDN option board is installed.)

(14) Pulse (1KHz) send (When ISDN option board is installed.)

(15) Pulse (2KHz) send (When ISDN option board is installed.)

(16) Pulse (N2KHz) send (When ISDN option board is installed.)

2) Technical function

3) System reset
- All data clear
- Location data clear
- Configuration data clear

4) Default type set

5) PC loading

6) G4 loading

1.4 General Appearance

Figure 1.1 shows the general appearance.
Figure 1.2 shows the control panel.

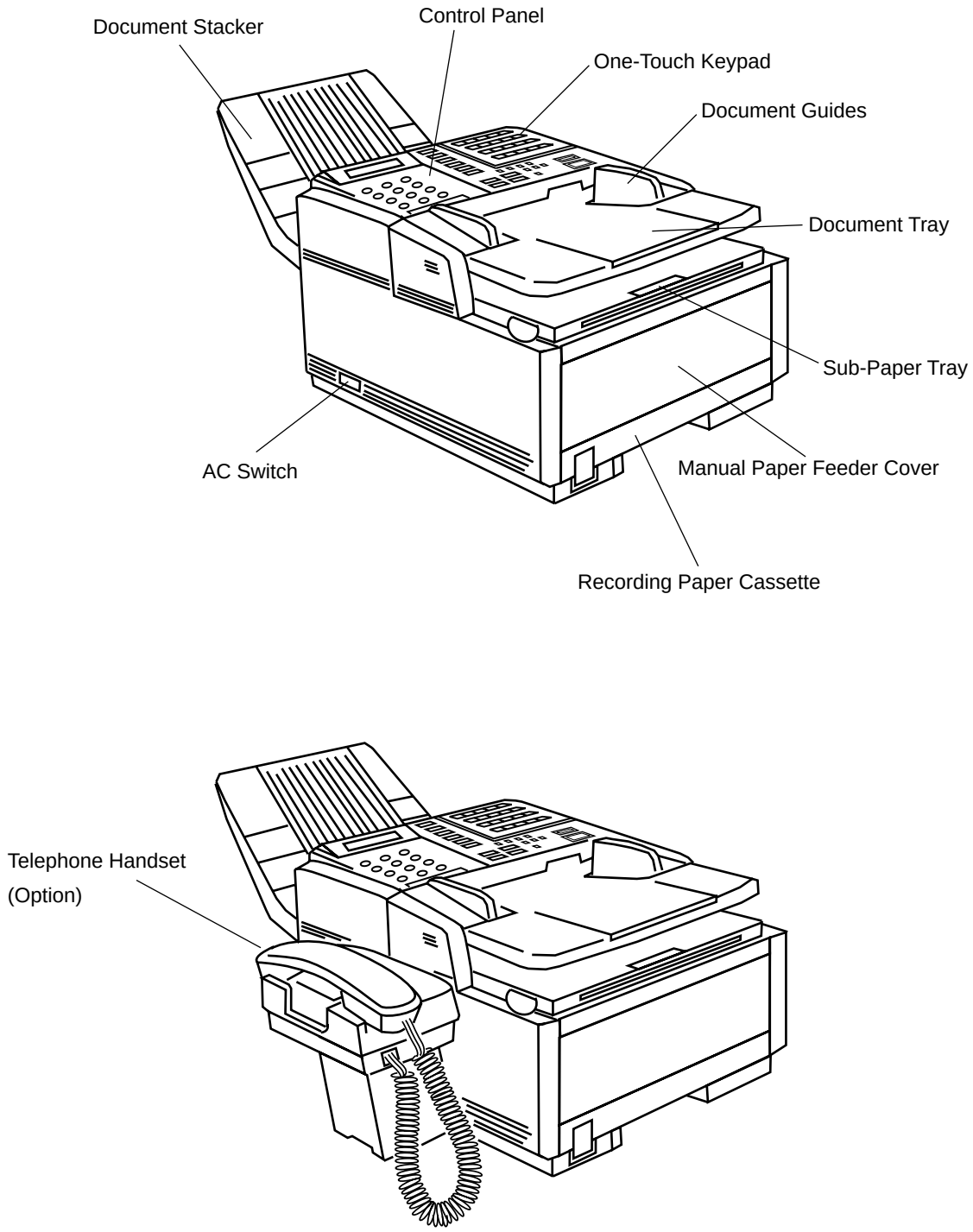

Figure 1.1 General Appearance

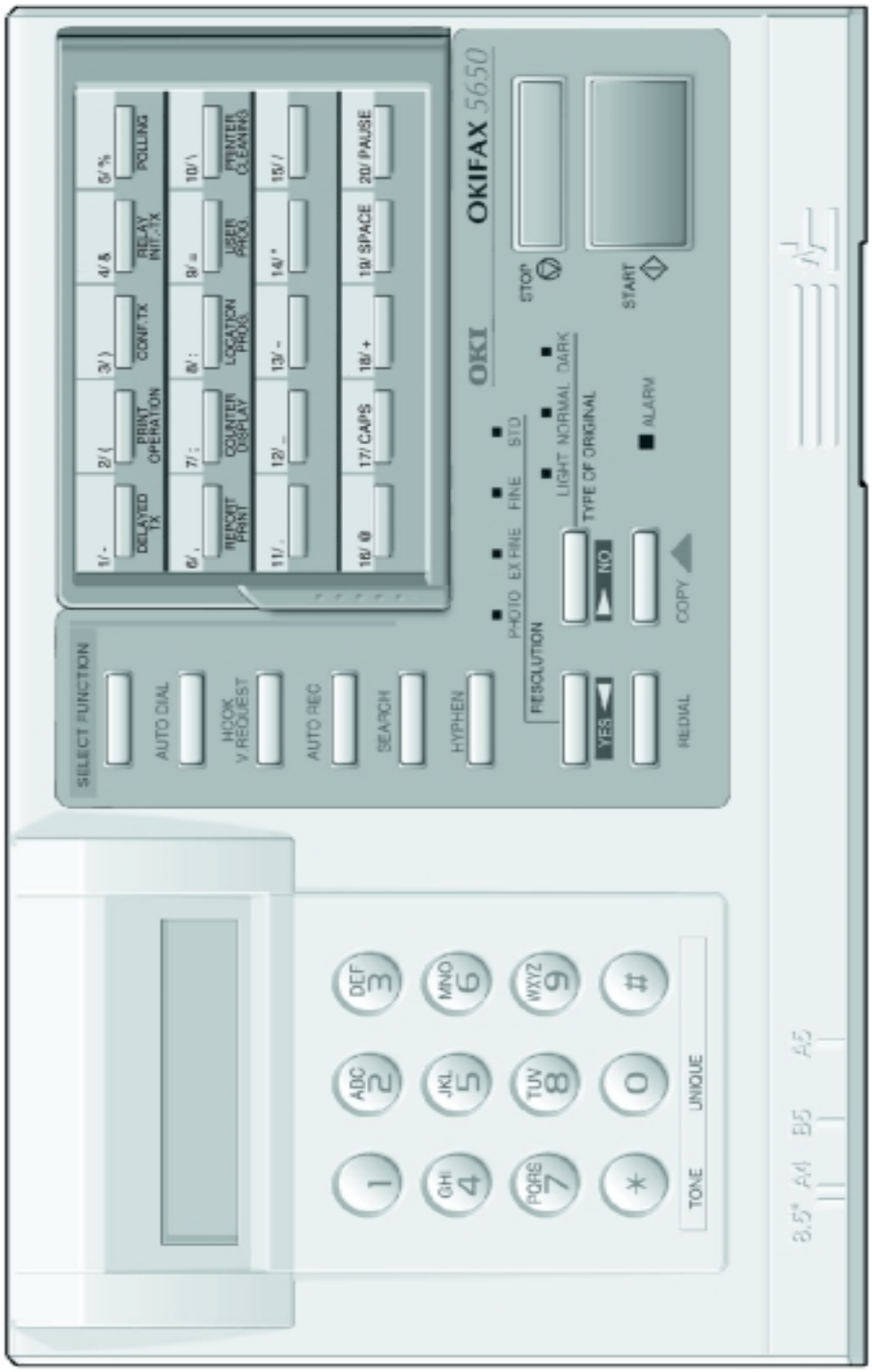

Figure 1.2 Control Panel

1.5 Basic Performance Specifications

Table 1.1 shows basic performance specifications.

Note: TF: Technical function setting
FP: Function program setting
OT: One-touch key pressed
F: SELECT FUNCTION key pressed

Table 1.1 (1/10) Basic Performance Specifications

No.	Item	Specifications
1	Applicable line	1) Public switched telephone network (PSTN) 2) Private branch exchange (PBX) (OT9+2) 3) Integrated services digital network (ISDN) : option
2	Line interface	
	1) Impedance	600ý balanced ***Note:*** Impedance may differ by the requirement of PTT.
	2) Sending power level	0 dBm to –15 dBm range, –7 dBm to –15 dBm range : FRE (Adjustable in 1 dB steps. TF+21)
	3) Receiving power level	0 dBm to -43 dBm (In case of V.34 TX/RX, –3 to –36 dBm)
3	Type of document to be transmitted	
	1) Width	Max. 216 mm (NA Letter) Min. 148 mm (ISO A5 size) ***Note:*** Effective reading width is NA Letter (215 mm).
	2) Length	Min. 128 mm (5 inch) Max. 356 mm (14 inch) Long document detection: 380 mm, or 1500 mm. * TF + 10 (To enable or disable the long document scanning)
	3) Thickness	Based on common bond paper, a) 0.08 to 0.13 mm for multiple page feeding b) 0.06 to 0.15 mm for single page feeding
	4) Shape	Rectangular
	5) Opacity	Documents allowing less than 40% of the scanner source light to pass through them.

Table 1.1 (2/10) Basic Performance Specifications

<table>
<tr><th>No.</th><th>Item</th><th>Specifications</th></tr>
<tr><td>4</td><td>Effective reading width</td><td>
<table>
<tr><th>Document width</th><th>Communication Mode/Paper width</th><th>Effective reading width</th><th>Copy size</th></tr>
<tr><td>ISO A4 (210 mm) [INT'L/FTZ]</td><td>G3/A4</td><td>208 mm for TX
202.8 mm for local copy</td><td>A4</td></tr>
<tr><td>NA letter (216 mm) [US/CANADA]</td><td>G3/A4</td><td>215.1 mm for TX
211.2 mm for local copy</td><td>Letter</td></tr>
<tr><td>NA legal (216 mm) [US/CANADA]</td><td>G3/A4</td><td>215.1 mm for TX
211.2 mm for local copy</td><td>Legal</td></tr>
</table>
Note: Local copy: Pritable reading width in local copy mode
</td></tr>
<tr><td>5</td><td>Automatic document feeder (ADF)</td><td>Max. 30 documents: NA Letter or A4 (20-lb/75 gm)
Max. 15 documents: NA Letter or A4 (16-28lb/60-105 gm bond paper)
Documents shall be placed facedown on Document tray. The first sheet will be fed first in the feeder and will exit facedown in the document stacker.</td></tr>
<tr><td>6</td><td>Document skew</td><td>Max. 1.0 mm skew over any advance of 100 mm.
The occurrence of skew exceeding 1 mm per 100 mm shall be 0.5 % or less.</td></tr>
<tr><td>7</td><td>Document jam detection</td><td>1) Transmission will stop and line disconnection will occur when the end of a document is not detected within 356 mm after scanning begins (except for the long document scanning. TF +10)

2) A jam will also be declared if the document does not reach the scanning position within 5.0 seconds after the start of a document feed.

Note: When a jam is detected during message transmission from the feeder, the machine will stop scanning and disconnect the line, but its receiving capability will remain valid.</td></tr>
<tr><td>8</td><td>Document jam removal</td><td>Manual release</td></tr>
</table>

Table 1.1 (3/10) Basic Performance Specifications

No.	Item	Specifications
9	Recording paper or sheet	For the first or second recording paper cassette: 1) Type: Plain paper cut (Bond paper : Xerox 4200 type or equivalent) 2) Size: ISO A4 (210 mm ∞ 297 mm) NA Letter (215.9 mm ∞ 279.4 mm)/(8.5 inch ∞ 11 inch) NA Legal14 (215.9 mm ∞ 355.6 mm)/(8.5 inch ∞ 14 inch) NA Legal13 (215.9 mm ∞ 330.2 mm)/(8.5 inch ∞ 13 inch) 3) Weight: 16 lbs to 24 lbs/60-90 gm base weight Base weight is defined as the weight of 500 sheets of 431.8 mm (17 inch) by 558.8 mm (22 inch) or 1 sheet size 1000 mm by 1000 mm. 4) Thickness: 0.08 mm to 0.13 mm 5) Condition: New paper For the manual loading feeder on the first cassette: 1) Type: Plain paper, transparency for overhead projector, colored paper, printed paper, envilope 2) Size: A4/NA Letter/NA Legal/Exective/A5/A6/etc. 3) Weight, thickness and condition: Same as above ***Note:*** One single sheet only should be loaded on the manual loading feeder for any one occasion. For best results use Oki Data recommended papers 1) Xerox 4200 (20 - lb/75gm weight paper) 2) L-type paper for photo-printers
10	Recording paper cassette 1) First cassette 2) Second cassette (Option)	 Up to 250 sheets/cassette (Oki Data recommended paper) Up to 500 sheets/cassette (Oki Data recommended paper)

Table 1.1 (4/10) Basic Performance Specifications

No.	Item	Specifications
11	Effective recording area	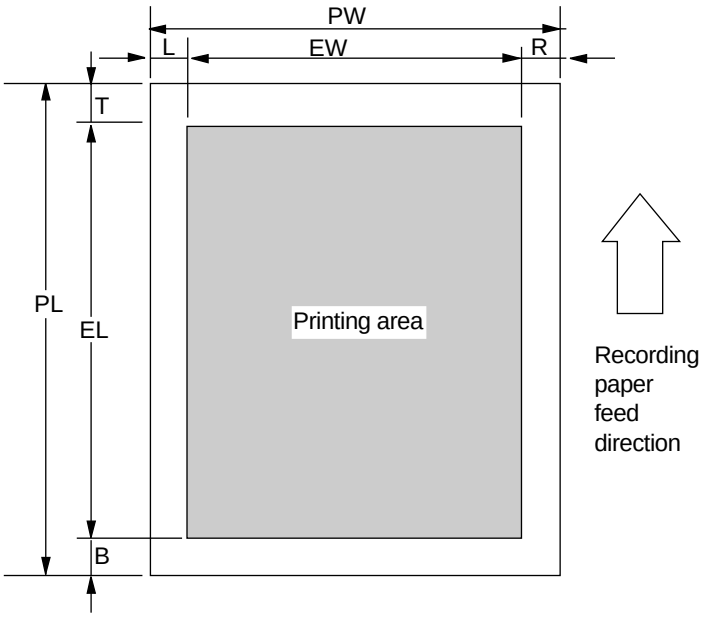

1) Printable area

	NA LETTER SIZE		ISO A4 SIZE		14 inch LEGAL SIZE		13 inch LEGAL SIZE	
	inch	mm	inch	mm	inch	mm	inch	mm
PL	11	279.4	11.7	297	14	355.6	13	330.2
PW	8.5	216	8.27	210	8.5	216	8.5	216
EL	10.76	273.4	11.46	291	13.76	349.6	12.76	324.2
EW	8.32	211.3	8.11	206	8.32	211.3	8.32	211.3
T	0.12	3	0.12	3	0.12	3	0.12	3
B	0.12	3	0.12	3	0.12	3	0.12	3
L	0.09	2.3	0.08	2	0.09	2.3	0.09	2.3
R	0.09	2.3	0.08	2	0.09	2.3	0.09	2.3

2) Guaranteed printing area

	NA LETTER SIZE		ISO A4 SIZE		14 inch LEGAL SIZE		13 inch LEGAL SIZE	
	inch	mm	inch	mm	inch	mm	inch	mm
PL	11	279.4	11.7	297	14	355.6	13	330.2
PW	8.5	216	8.27	210	8.5	216	8.5	216
EL	10.5	266.7	11.2	284.3	13.5	342.9	12.5	317.5
EW	8.0	203.2	7.77	197.3	8.0	203.2	8	203.2
T	0.25	6.35	0.25	6.35	0.25	6.35	0.25	6.35
B	0.25	6.35	0.25	6.35	0.25	6.35	0.25	6.35
L	0.25	6.35	0.25	6.35	0.25	6.35	0.25	6.35
R	0.25	6.35	0.25	6.35	0.25	6.35	0.25	6.35

Note: The printable area means the area allowing actual printing at the time of receiving. The guaranteed printing area means the area where the printing quality is guaranteed.
This table does not include vertical and horizontal addressing error +/- 3 mm) of recording paper.

12	Copy stacking	The fax can discharge printed copies and stack them face-down. Maximum sheets on the copy stacker: 100* ***Note** :* Oki Data recommended paper, New standard 20-lb. (Xerox 4200)

Table 1.1 (5/10) Basic Performance Specifications

No.	Item	Specifications
13	Scanning resolution	Horizontal: • 300 dot/inch Vertical: Transmission mode: • 3.85 line/mm (STD), 7.7 line/mm (FINE), 15.4 line/mm (EX.FINE) or 300 dot/inch,(EX. FINE) ***Note:*** 300 dpi ∞ 300 dpi ; Transmission is available COPY mode: 7.7 line/ mm (FINE) or 300 dot/inch (EX. FINE)
14	Image scanning method	NA Letteer size (2592-bit) contact image sensor
15	Contrast control	1) Automatic background sensing A continuous document background of 0.3 OD (optical density) or less will be transmitted as white. 2) The LIGHT and DARK contrasts (low contrast) will be automatically enhanced to improve image quality. Slice level shifting has 3 levels of switch selection on operation panel.
16	Recording resolution	Horizontal: • 300 dot/inch Vertical: • Fixed: 3.85 line/mm (STD), 7.7 line/mm (FINE), 15.4 line/mm (EX-FINE) 300 dot/inch (EX-FINE). Veriable: Automatically adjusted to the paper length. • 300 to 412 dot/inch • 3.85 to 5.06 line/mm (STD) • 7.7 to 10.13 line/mm (FINE) • 15.4 to 20.24 line/mm (EX.FINE), 300 dot/inch
17	Recording system	Electro-photographic printing 1) 211.3mm (2496 bit) or 216.7mm (2560 bit) LED print head
18	Skew of recording paper	Maximum allowable skew is + or - 1 mm over an advance of 100 mm.
19	Copy darkness	1) Black image: Greater than 1.2 OD* 2) White background (unprinted area): Not greater than 0.2 OD ***Note:*** OD(optional dencity)
20	Copy uniformity	Printed copies will exhibit a uniform density of the printed and background area: 1) From edge to edge: 25% 2) From copy to the next copy: 30%
21	Recording paper running out	The fax can detect the no-paper condition by a photosensor. When the paper has run out in the local copy operation, the scanning will stop with “PAPER OUT/JAM” on the LCD and an ALARM LED turns on without an alarm tone. When the paper has run out while a message is being received and the no-paper reception is activated, the LCD display will show “MSG. IN MEMORY”, and the ALARM LED turns on.

Table 1.1 (6/10) Basic Performance Specifications

No.	Item	Specifications
22	Minimum scan line time for receiving	0 ms, when receiving in ECM mode or from an Oki Data facsimile. 5 ms at 15.4 line/mm or 7.7 line/mm and 10 ms at 3.85 line/mm when receiving from a non-Oki Data facsimile or non-ECM mode.
23	Coding scheme	1) One-dimensional coding scheme: Modified Huffman (MH) 2) Two-dimensional coding scheme: Modified READ (MR) Modified modified READ (MMR)
24	MODEM 1) High-speed MODEM	a) ITU-T Rec. V.29 (9600/7200 bps) b) ITU-T Rec. V.27 ter (4800/2400 bps) c) ITU-T Rec. V.17 (14400/12000/9600/7200 bps) d) ITU-T Rec. V.33 (14400/12000 bps) e) ITU-T Rec. V.34 (33600/28800 bps)
	2) Low-speed MODEM	ITU-T Rec. V.21 channel 2 (300 bps)
25	Fallback	Automatic fallback will occur according to the following sequence by FTT, RTN or PPR.

Fallback rank	Transmission speed	Activated by FTT (Times)	Activated by RTN (Times)	Activated by PPR (Times)	Protocol
1st	14400 bps	1	1	4 (Note 1)	ITU-T V.17 (V.33)
2nd	12000 bps	1	1	4 (Note 1)	ITU-T V.17 (V.33)
3rd	9600 bps	1	1	4 (Note 1)	ITU-T V.17 (V.29)
4th	7200 bps	1	1	4 (Note 1)	ITU-T V.17 (V.29)
5th	4800 bps	2	1	4 (Note 1)	ITU-T V.27 ter.
6th	2400 bps	2	1	4 (Note 1)	ITU-T V.27 ter.

When the last trial fails, the transmitting station sends out a DCN signal to the remote station for disconnection.
- Modem automatically performs the fall-back depending upon the linecondition.

Note 1: Continuous PPRs for the same partial page within each fallback rank.

Fallback rank	Transmission speed	Activated byPPR (Times)	Protocol
1st	28800 bps	1 (Note 1)	ITU-T V.34
2nd	26400 bps	1 (Note 1)	ITU-T V.34
3rd	24000 bps	1 (Note 1)	ITU-T V.34
4th	21600 bps	1 (Note 1)	ITU-T V.34
5th	19200 bps	1 (Note 1)	ITU-T V.34
6th	16800 bps	1 (Note 1)	ITU-T V.34
7th	14400 bps	1 (Note 1)	ITU-T V.34
8th	12000 bps	1 (Note 1)	ITU-T V.34
9th	9600 bps	1 (Note 1)	ITU-T V.34
10th	7200 bps	1 (Note 1)	ITU-T V.34
11th	4800 bps	1 (Note 1)	ITU-T V.34
12th	2400 bps	1 (Note 1)	ITU-T V.34

Note 2: V.34 modem performs the fall-back depending upon the line condition automatically.

Table 1.1 (7/10) Basic Performance Specifications

<table>
<tr><th>No.</th><th>Item</th><th>Specifications</th></tr>
<tr><td>26</td><td>Protocol</td><td>1) ITU-T Rec. T.30
2) Oki Data special protocol
High-speed protocol
The T.30 protocol signal from the transmitting station is sent at message transmission speed instead of 300 bps.
Note: In high-speed protocol, V.34 is not applied.
3) ITU-T G4 Class 1 (option)</td></tr>
<tr><td>27</td><td>Image Transmission time</td><td>3.0 seconds at 33.6 Kbps per sheet of ITU-T No.1 evalution test chart.
Note: This speed denotes the time interval corresponding to Phase C (message transmission phase) as referred to in ITU-T T.30.
<table>
<tr><th colspan="2"></th><th>OKIFAX 5650</th></tr>
<tr><td rowspan="2">G3 Basic</td><td>Procedure Time</td><td>Initial 8.5 Sec. (V34)
Intermediate 8.5 Sec. (V34)
Final 8.5 Sec. (V34)</td></tr>
<tr><td>Image Time</td><td>33600 Standard 3.0 Sec.
Fine 4.2 Sec.</td></tr>
</table>
Note: The above table shows the valus under the following conditions:
• Sender ID: OFF
• High-speed protocol: OFF
• Transmission mode: Memory
• Resolution: STD</td></tr>
<tr><td>28</td><td>Error correction</td><td>ITU-T Error correction mode (ECM) in T4 (G3), T30 (procedurs) are provided.
Oki Data ITU-T ECM</td></tr>
<tr><td>29</td><td>Communication mode</td><td>Half-duplex</td></tr>
<tr><td>30</td><td>Ringing signal detection sensitivity</td><td></td></tr>
<tr><td></td><td>1) Voltage range</td><td>25 to 150 V r.m.s.
Inoperative below 10 V
Note: This range may differ by the requirement of PTT.</td></tr>
<tr><td></td><td>2) Frequency range</td><td>16 to 68 Hz
Note: This range may differ by the requirement of PTT.</td></tr>
<tr><td></td><td>3) Ring response time</td><td>One-ringing signal or 5 sec, 10 sec, 15 sec, and 20 sec selectable. (F + OT9 + ♦ +11)</td></tr>
</table>

Table 1.1 (8/10) Basic Performance Specifications

<table>
<tr><th>No.</th><th>Item</th><th>Specifications</th></tr>
<tr><td>31</td><td>Memory capacity (Image memory)</td><td>
<table>
<tr><td></td><td>Basic Model</td><td>Optional memory</td></tr>
<tr><td>OKIFAX 5650</td><td>2.5 M-byte</td><td>2/4 M-byte</td></tr>
</table>
<table>
<tr><td></td><td>Memory condition</td><td>OKIFAX 5650 [pages]</td></tr>
<tr><td rowspan="3">With option board</td><td>Standard (without option)</td><td>200</td></tr>
<tr><td>2M-byte</td><td>360</td></tr>
<tr><td>4M-byte</td><td>520</td></tr>
</table>
Note1: ITU-T No.1 sample document is used to count the number of sheets.
2: Memory back-up time is 20 hours (tipical and Battery full charge condition) after the power off condition.
</td></tr>
<tr><td>32</td><td>Telephone handset (Option)</td><td>General telephone function is available while the power is on.

Note: In the fax special versions, general telephone is available even when the power is off.</td></tr>
<tr><td>34</td><td>Overheat protection</td><td>The heater of the fuser unit is controlled within the predetermined temperature range by the thermistor. If the temperature of the heater exceeds the range, the LCD displays “PRINTER ALARM 4”.

Furthermore, the built-in thermostat in the fuser unit prevents the heater from being overheated even in the event of the failures in the above temperature control circuit.</td></tr>
<tr><td>35</td><td>PC interface applications (Option)</td><td>The following four modes are supported:
1) PC local printer function
2) PC scanner function
3) PC FaxModem function

Note: This function will be supplied as the OKIFAX 5650 option in case Oki Data can get the approval in respective countries without modifying the optional unit.

For, details, see OKIFAX 5650 product specification for MFP.

Hardeare is standard and software is option for Bi-Centro interface.</td></tr>
<tr><td>36</td><td>Fax2Net: Provider type (Option)</td><td>The Fax2Net service is facsimile communication service using the Fax2Net-supplied internet, of the Fax2Net-supplied functions, the following six functions are supported in the OKIFAX 5650.
1) Fax over IP
2) Fax to E-mail
3) Virtual E-mail
4) Broadcast
5) Web Retreival
6) Prepaid Registration
Note: For detail, see product, specification “Fax2Net specification”</td></tr>
</table>

Table 1.1 (9/10) Basic Performance Specifications

<table>
<tr><th>No.</th><th>Item</th><th>Specifications</th></tr>
<tr><td>37</td><td>ISDN G4 (Option)</td><td>The following four modes are supplied.
1) G4 function
2) ISDN G4 communication
3) ISDN G3 communication
4) ISDN report and list
Note: For details, see Appendix H “ISDN G4 option system specifications”</td></tr>
<tr><td>38</td><td>Power supply unit and power consumption of the machine</td><td>Power consumption of the machine
(Typical power)
<table>
<tr><th></th><th>INT’L version (230V)</th><th>US/CANADA version (120V)</th></tr>
<tr><td>Transmit</td><td>22W</td><td>22W</td></tr>
<tr><td>Receive</td><td>355W</td><td>355W</td></tr>
<tr><td>Local copy</td><td>360W</td><td>360W</td></tr>
<tr><td>Standby
(Power Save OFF)</td><td>9W</td><td>9W</td></tr>
<tr><td>Standby
(Power Save ON)</td><td>0.5W</td><td></td></tr>
</table>
** US/CANADA version has no power save mode.

Note: Chart; ITU-T No. 1</td></tr>
<tr><td>39</td><td>Ambient condition</td><td>Temperature :
The machine will operate as specified in the Temperature range of 10 Celsius to 32 Celsius. Operation outside this range will be subject to the limitations shown in the following table.
Humidity :
The machine will operate as specified at relative humidities in the range of 20 percent to 80 percent (non-condensing). Operation outside this range will be subject to the limitations shown the following table.
<table>
<tr><th></th><th>In operation</th><th>Power off mode</th><th>During Storage</th><th>Unit</th></tr>
<tr><td>Temperature</td><td>50 - 90
(10 - 32)</td><td>32 - 110
(0 - 43)</td><td>14 - 110
(—10 - 43)</td><td>_F
(_C)</td></tr>
<tr><td>Humidity</td><td>20 - 80</td><td>10 - 90</td><td>10 - 90</td><td>%RH</td></tr>
<tr><td>Maximum wet bulb temperature</td><td>77
(25)</td><td>80.4
(26.8)</td><td>-</td><td>_F
_C</td></tr>
<tr><td>Minimum difference between wet and dry bulb temperature</td><td>35.6
(2)</td><td>35.6
(2)</td><td>-</td><td>_F
_C</td></tr>
</table>
1. Storange conditions specified above apply to the machine in packed condition.
2. Temperature and humidity must be in the range where no condensation occurs.</td></tr>
<tr><td>40</td><td>Dimension
(Main body)</td><td>1) Width: Approx. 330 mm
2) Depth: Approx. 420 mm
3) Height: Approx. 245 mm</td></tr>
</table>

Table 1.1 (10/10) Basic Performance Specifications

No.	Item	Specifications
41	Weight (Main body)	Approx. 13 kg Excluding optional units, recording paper and packing materials.
42	Attachment (to the main body)	1) AC power cord ∞ 1 2) I/D unit ∞ 1 (Already installed) 3) Toner cartridge ∞ 1 4) Telephone handset ∞ 1 (option) 5) Curled cord and Telephone cord for (4) ∞ 1 (option) 6) Document stacker ∞ 1 7) Line cord ∞ 1 8) One touch sheet ∞ 1 (Already installed) 9) User's guide ∞ 1

1.6 Reports and Lists

Table 1.2 shows Reports and Lists Specifications.

Note: F +OT: Press FUNCTION and One-touch key
FP: Function program setting
TF: Technical function setting

Table 1.2 (1/2) Reports and Lists Specifications

No.	Item	Specifications
1	Call-back message	The transmitter sends a call-back message to the receiver only when the receiver does not respond to voice request of the transmitter.
2	Sender ID	The fax can transmit a programmed alphanumeric message, such as company's name, consisting of up to 32 characters. * (Outside only)
3	Transmitting subscriber identification(TSI) printing	Received TSI can be printed at the top of the received page. * TF + 05 (To enable or disable this function)
4	Cancel report (Power outage report)	The fax can automatically print out a power-outage report when the power off condition occurs.
5	Activity report	The fax can print out an activity report manually, and provides a record of your fax machine's last 30 communications. This report does not contain the results of messages which were received without errors. However it does contain messages received in memory with or without errors. * REPORT PRINTOUT+1(Manual printout)
6	Message confirmation report	The fax can print out a message confirmation report manually or automatically in the following cases. (1) When COPY key is pressed after a single location call, this report can be printed. (Manual printout) * FP + 01 (To enable or disable automatic printing)
7	Broadcast entry report	The fax can print out a broadcast entry report if specified during operating sequence of a broadcast.
8	Broadcast confirmation report	The fax can print out a broadcast confirmation report manually or automatically. * COPY key (Manual printout): Pressed after a broadcast. * REPORT PRINTOUT + 2 (Manual printout) * FP +02 (To enable or disable automatic printing)

Table 1.2 (2/2) Reports and Lists Specifications

No.	Item	Specifications
9	Confidential reception report	The fax can print out this report automatically on completion of a confidential reception.
10	Telephone directory	This directory is printed manually. (REPORT PRINTING +3)
11	Configuration report	This report is printed manually. (REPORT PRINTING +4)
12	Active memory files	This report will be manually or automatically printed out for information of transmission/reception data stored in the memory. When there is no stored image data in the memory at all, the Active memory files is not printed out. (REPORT PRINTING + 3)
13	Protocol dump (G3)	This report will be manually printed out for maintenance purpose. If the previous communication is G3, G3 communication protocol dump is printed out. (REPORT PRINTING + 6)
14	Self-diagnosos report	This report will be manually printed out for maintenance purpose. (LOCAL TEST + 1)
15	Log report	This report will be manually printed out for fault analysis. (REPORT PRINTING)
16	Protocol dump (G4)	This report will be manually printed out for maintenance purpose. If it is G4, G4 communication protocol dump is printed out. (REPORT PRINTING + 6)

Call-back Message Format: (Example)

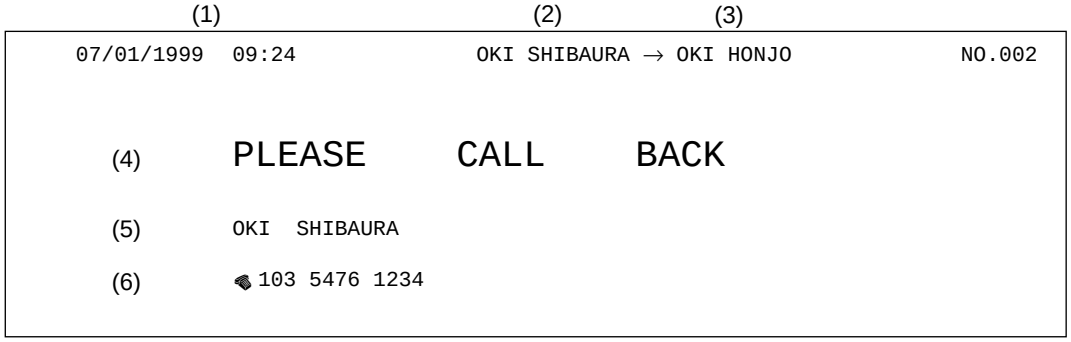

(1) Date and time
(2) Sender ID
(3) CSI/Personal ID
(4) Letters "PLEASE CALL BACK"
(5) Sender ID
(6) Sender's call back telephone number

Sender ID Format: (Example)

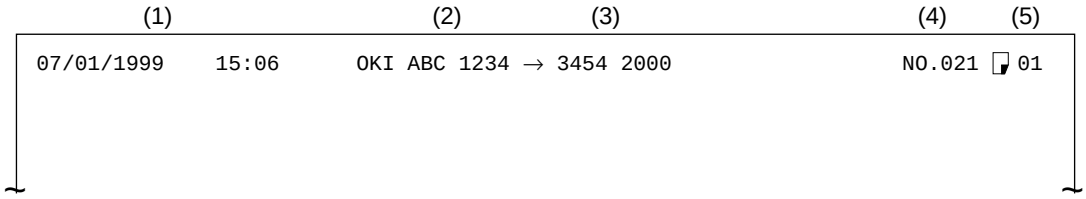

(1) Date and time
(2) Sender ID
(3) Receiver's CSI/Personal ID
(4) Session number
(5) Page number

TSI Printing and Local Date and Time Printing Format: (Example)

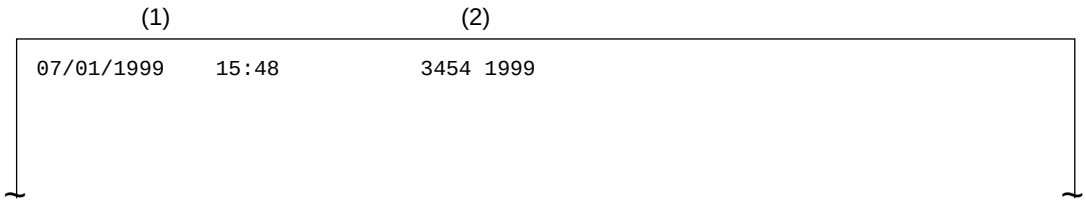

(1) Local date and time printing
(2) TSI printing

Note: TSI printing (TF+05)
Local date and time printing (TF+04)

POWER OUTAGE REPORT

07/01/2000 17:05
ID=OKI

DATE	TIME	S,R-TIME	DISTANT STATION ID	MODE	PAGES	RESULT	
06/30	10:10		0485-88-3385			LOST	9080
06/30	10:30		ODS TAKASAKI		03	LOST	0000
06/30	12:05	01'20"	OKI FAX	CONF=01	03	LOST	0000
06/30	13:00	00'20"	03-5476-4300	RX	01	LOST	0000
06/30	10:50	01'20"	0495-22-5400	RX	03	LOST	0000
06/30	15:00			B.C.	01	LOST	

Note: Memory receptin only is printed on the mode in the report as called.

Figure 1.3 POWER OUTAGE REPORT

(1) **Activity Report Format (Example)**

ACTIVITY REPORT

(2) 05/19/1999 17:05
(3) ID=OKI

(4) TOTAL TIME CALLING=08:22' CALLED=17:30'

DATE (5)	TIME (6)	S,R-TIME (7)	DISTANT STATION ID (8)	MODE (9)	PAGES (10)	RESULT (11)	(12)	
05/17	10:00	01'20"	OKI FAX	CALLING	02	OK	0000	
05/17	10:10	01'00"	0485 88 3385	CALLING	00	STOP	9080	
05/17	10:30	00'20"	ODS TAKASAKI	POLLING	00	OK	0000	*8
05/17	12:05	01'20"	OKI FAX	POLLED	03	OK	0000	*9
05/17	13:00	00'20"	03 5476 4300	POLL=XX	01	OK	0000	*10
05/17	15:40	03'25"	ODS TAKASAKI	CONF=01	03	OK	0000	*1
05/17	19:00	00'00"	OKI FAX		01	OK	0000	*2
05/18	10:10	02'00"	OKI SHIBAURA	CALLED	05	NO	908E	
05/18	10:22	00'12"	0495 22 5400	CALLING	00	STOP	9080	
05/18	10:50	01'20"	0495 22 5400	CALLED	03	NO	9090	
05/18	12:05	00'20"	OKI FAX	CALLING	01	STOP	9080	
05/18	15:00	01'30"		CALLED	03	OK	0000	*3
05/18	15:30	00'20"		CALLING	01	OK	0000	
05/18	17:05	05'20"		B.C.		COMP.	60A0	*4
05/18	19:04	00'20"	03 5476 4300	CALLING	00	STOP	9080	
05/19	09:00	01'11"		CALLING	02	OK	0000	
05/19	10:20	00'20"	03 5476 4300	CALLING	02	STOP	9080	
05/19	10:35	02'23"		CONF=01	02	OK	0000	*1
05/19	10:50	00'20"	ODS TAKASAKI	CALLED	01	OK	0000	
05/19	11:03	00'00"	OKI FAX	CALLING	00	STOP	9080	
05/19	13:00	00'24"	03 5476 4300		01	OK	0000	*5
05/19	16:00	03'25"	ODS TAKASAKI	FWD-R	03	OK	0000	*6
05/19	16:04	03'30"	OKIFAX	FWD-T	03	OK	0000	*7

*1 : Confidential reception
*2 : Manual TX
*3 : Memory reception
*4 : Broadcast TX
*5 : Manual memory reception
*6 : Reception for forwarding
*7 : Forwarding
*8 : Polling reception
*9 : Polling transmission
*10 : Bulletin polling

(1) Title of the report
(2) Date and time when the report was printed
(3) Sender ID
(4) Total CALLING and CALLED time
(5) Date of transmission or reception
(6) Time when the communication started
(7) Time span of the fax communication.
(8) Identification of the remote station
Personal ID/Location ID/TSI/CSI/Dial number or space
(9) Communication mode:
CALLING (Transmission)
CALLED (Reception NG or MEMORY RX)
B. C. (Broadcast)
CONF=XX (Confidential reception)
FWD-R (Fax Fowarding RX)
FWD-T (Fax Fowarding TX)
POLLED (polling TX) in case of except for country code=FRE
POLLING (polling RX) in case of except for country code=FRE
POLLED (polling RX) in case of country code=FRE
POLLING (polling TX) in case of country code=FRE
POLL=XX (Bulletin polling)
(10) Number of transmitted pages or received pages
(11) Result code
OK (Note1)/NO/STOP (Note 2)/BUSY/PAPER (Out of recording paper)/S_JAM (Document jam)/R_JAM (Recording paper jam)/COVER/COMP (Completion of a broadcast)/PUNIT (Printer Alarm)/CANCL (Confidential reception T.O.)

Note1: The following cases are included:
- Unmatched handshaking to the received NSF.
- Unmatched password to the received NSC in the polling transmission mode.

2: The following cases are included:
- The STOP key is pressed.
- The memory cancellation operation removes the message from the active memory files.

(12) Service code

Message Confirmation Report Format (1/2): (Example)

(1) MESSAGE CONFIRMATION

(2) 07/01/1999 08:05
(3) ID=OKI

(4) DATE	(5) S.R-TIME	(6) DISTANT STATION ID	(7) MODE	(8) PAGES	(9) RESULT	(10)
07/01	00’20"	OKI FAX	CALLING	02	OK	0000

Message Confirmation Report Format (2/2): (Example)

(1) MESSAGE CONFIRMATION

(2) 07/01/1999 17:05
(3) ID=OKI

(4) DATE	(5) S.R-TIME	(6) DISTANT STATION ID	(7) MODE	(8) PAGES	(9) RESULT	(10)
07/01	00’20"	OKI FAX	B.C.	01	COMP	60A0
07/01/96	17:00	OKI → OKIFAX	No.022	001		

150 km

(11)

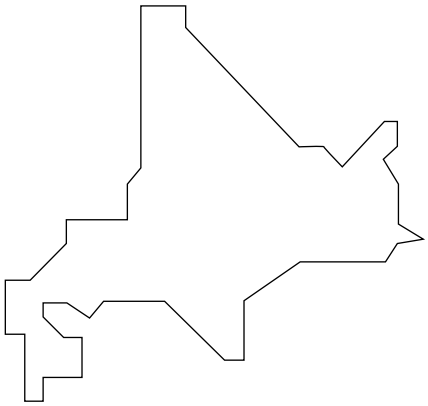

(1) Title of the report
(2) Date and time when the report was printed
(3) Sender ID
(4) Date of transmission or reception
(5) Length of time for which the fax was connected to the line
(6) Identification of the remote station
Personal ID/Location ID/TSI/CSI/Dial number
(7) Communication mode
Reference to ACTIVITY REPORT
(8) Number of transmitted pages or received pages
(9) Result of the communication
Reference to ACTIVITY REPORT
(10) Service code
(11) Message

BROADCAST ENTRY REPORT P1

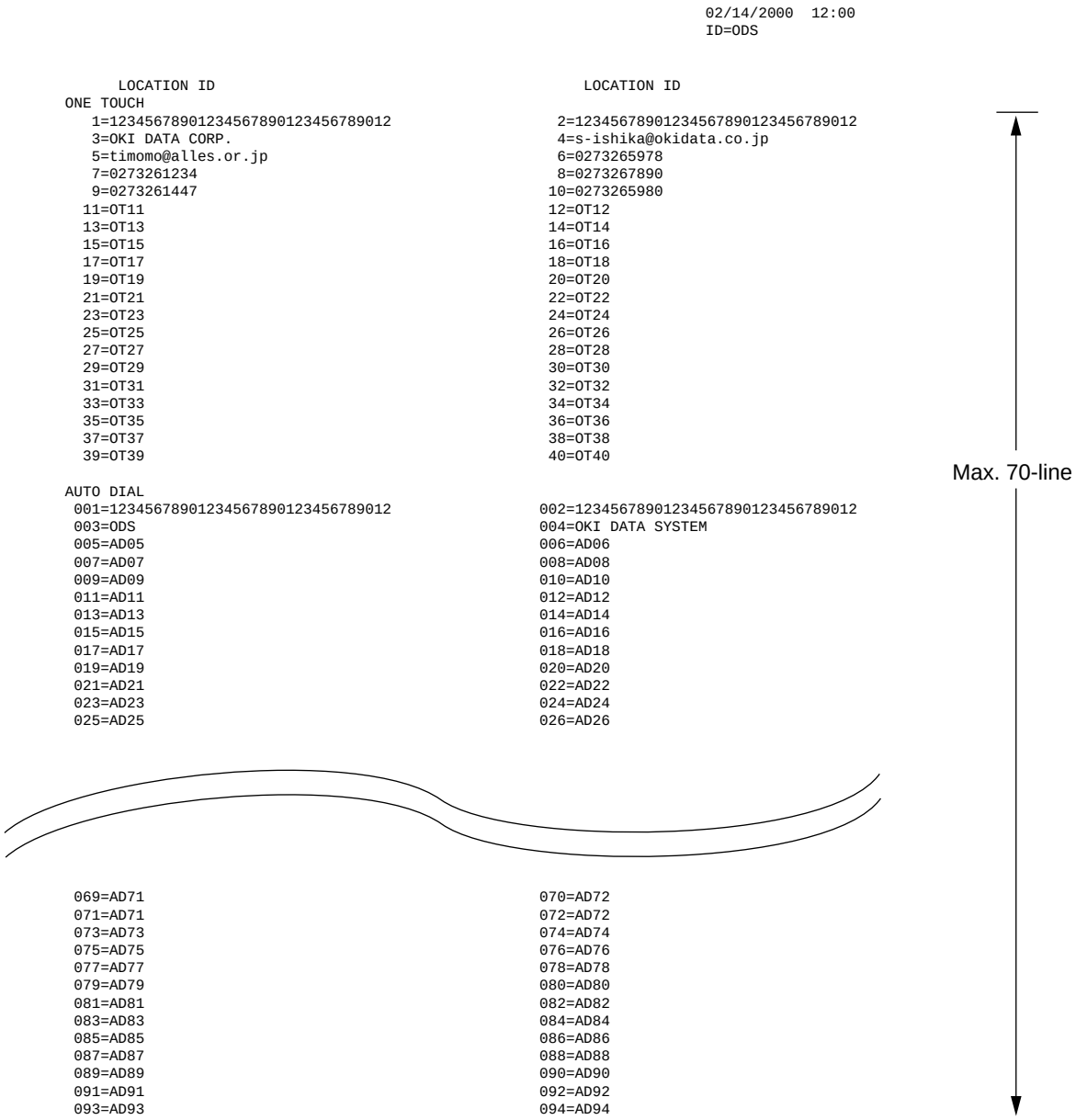

Note: When the number of printed line exceeds Max.70-line, 2nd page is printed out.

Figure 1.4 (1/2) Broadcast Entry Report

BROADCAST ENTRY REPORT P2

```
                                                                  02/14/2000  12:00
                                                                  ID=ODS

      LOCATION ID                                          LOCATION ID
AUTO DIAL
 095=12345678901234567890123456789012          096=12345678901234567890123456789012
 097=ODS                                                 098=OKI DATA SYSTEM
 099=AD99                                                100=AD100
 101=AD101                                               102=AD102
 103=AD103                                               104=AD104
 105=AD105                                               106=AD106
 107=AD107                                               108=AD108
 109=AD109                                               110=AD110
 111=AD111                                               112=AD112
 113=AD113                                               114=AD114
 115=AD115                                               116=AD116
 117=AD117                                               118=AD118
 119=AD119                                               120=AD120





 141=AD141                                               142=AD142
 143=AD143                                               144=AD144
 145=AD145                                               146=AD146
 147=AD147                                               148=AD148
 149=AD149                                               150=AD150

KEYPAD
 1234567890123456789012345678901234567890
1234567890123456789012345678901234567890
123456789012345678901234567890
12345678901234567890123456
1234567890123456789012
123456789012345678901234
12345678901234567890
123456789012345678
1234567890123456
12345678901234
```

Figure 1.4 (2/2) Broadcast Entry Report

BROADCAST CONFIRMATION REPORT

02/14/2000 12:00
ID=ODS

PAGES = 01
START IME = 02/04 11:00
TOTAL TIME = 00:30’34"

LOCATION	PAGES	RESULT	LOCATION ID	PAGES	RESULT
ONE TOUCH					
1=12345678901234567890123 4	01	OK	2=1234567890123456789012	01	OK
3=OKI DATA CORP.	01	OK	4=s-ishika@okidata.co.jp	01	OK
AUTO DIAL					
001=1234567890123456789012 3	01	OK	002=1234567890123456	01	OK
003=ODS	01	OK	004=OKI DATA SYSTEM	01	OK
005=AD05	01	OK	006=AD06	01	OK
KEYPAD					
12345678901234567890123 4	01	OK			
12345678901234567890	01	OK			

Max. 70-line

Note: When the number of printed line exceeds Max.70-line, 2nd page is printed out.

Figure 1.5 Broadcast Confirmation Report

CONFIDENTIAL RX REPORT

07/01/2000 17:05
ID=OKI

DATE	TIME	S,R-TIME	DISTANT STATION ID	MODE	PAGES	RESULT	
07/01	17:00	00'00"	OKI FAX	CONF=01	02	OK	0000

Figure 1.6 Confidential RX Report

1.8 Telephone Directory

1.8.1 Print conditions

		OKIFAX 5650
Number of OTs		40
Number of ADs		150
Number of groups		20
Maximum number of digits of OT/AD Tel No.		40
Maximum number of digits of OT OR Tel No.		40
Maximum number of digits of Email/Web		64 (Alphabetic small letters can be printed.)
Email/Web registered OT		All OTs (40)
Communication parameter		All OT/ADs excluding Email/Web registered OT
	G3-ECHO	ON/OFF
	G3-RATE	4.8K/9.6K/14.4K/28.8K/33.6K
	MODE	G3/G4

	OKIFAX 5650
1st page	OT1 ~ 30
2nd page	OT31 ~ 40 + AD 01 ~ 45
3rd page	AD 46 ~ 110
4th page	AD 111 ~ 150
5th page	Group 1 ~ 5
6th page	Group 6 ~ 10
7th page	Group 11 ~ 15
8th page	Group 16 ~ 20

Report is output for registration pages corresponding to the above list.

TELEPHONE DIRECTORY P1

02/14/2000 12:00
ID=ODS

ONE TOUCH	LOCATION ID		TEL NO.	G3-ECHO/G3-RATE/MODE
1	ABCDEFGHIJKLMNO		12345678901234567890123456789012345678901234567890	ON / 33.6K / G4
		OR	12345678901234567890123456789012345678901234567890	
2	OT2		123456789012345678901234567890	OFF / 9.6K / G3
		OR		
3	OT3		12345678901234567890	ON / 33.6K / G4
		OR		
4	OT4		12345678901234567890	ON / 33.6K / G4
		OR		
5	OT5		12345678901234567890	ON / 33.6K / G4
		OR		
6	s-ishika@okidata.cp.jp			
7	http://www.fax2net.com/			
8	OT8		12345678901234567890	ON / 33.6K / G4
		OR		
9	http://ibodt78.taka.okidata.co.jp/odsnews			
10				ON / 33.6K / G4
		OR		
11				ON / 33.6K / G4
		OR		
12	OT12		12345678901234567890	ON / 33.6K / G4
		OR		
13	OT13		12345678901234567890	ON / 33.6K / G4
		OR		
14				ON / 33.6K / G4
		OR		
15				ON / 33.6K / G4
		OR		
16				ON / 33.6K / G4
		OR		
25				ON / 33.6K / G4
		OR		
26				ON / 33.6K / G4
		OR		
27				ON / 33.6K / G4
		OR		
28				ON / 33.6K / G4
		OR		
29				ON / 33.6K / G4
		OR		
30				ON / 33.6K / G4
		OR		

Figure 1.7 (1/8) Telephone Directory

TELEPHONE DIRECTORY P2

02/14/2000 12:00
ID=ODS

	LOCATION ID	TEL NO.	G3-ECHO/G3-RATE/MODE
ONE TOUCH			
31	ABCDEFGHIJKLMNO	12345678901234567890123456789012345678901234567890	ON / 33.6K / G4
	OR	12345678901234567890123456789012345678901234567890	
32			OFF / 9.6K / G3
	OR		
33			ON / 33.6K / G4
	OR		
34			ON / 33.6K / G4
	OR		
35			ON / 33.6K / G4
	OR		
36			ON / 33.6K / G4
	OR		
37	http://www.yahoo.co.jp/		
38			ON / 33.6K / G4
	OR		
39	http://www07.taka.okidata.co.jp/vb/install.HTM		
40			ON / 33.6K / G4
	OR		
AUTO DIAL			
001	ABCDEFGHIJKLMNO	12345678901234567890123456789012345678901234567890	ON / 33.6K / G4
002	AD02	12345678901234567890123456789012345678901234567890	ON / 33.6K / G4
003	AD03	12345678901234567890	ON / 33.6K / G4
004			ON / 33.6K / G4
005			ON / 33.6K / G4
006			ON / 33.6K / G4
007			ON / 33.6K / G4
008			ON / 33.6K / G4
009			ON / 33.6K / G4
010			ON / 33.6K / G4
011			ON / 33.6K / G4
012			ON / 33.6K / G4
013			ON / 33.6K / G4
014			ON / 33.6K / G4
015			ON / 33.6K / G4
016			ON / 33.6K / G4
017			ON / 33.6K / G4
018			ON / 33.6K / G4
019			ON / 33.6K / G4
020			ON / 33.6K / G4
041			ON / 33.6K / G4
042			ON / 33.6K / G4
043			ON / 33.6K / G4
044			ON / 33.6K / G4
045			ON / 33.6K / G4

Figure 1.7 (2/8) Telephone Directory

TELEPHONE DIRECTORY P3

02/14/2000 12:00
ID=ODS

AUTO DIAL	LOCATION ID	TEL NO.	G3-ECHO/G3-RATE/MODE
046	AD46	12345678901234567890123456789012345678901234567890	ON / 33.6K / G4
047	AD47	12345678901234567890123456789012345678901234567890	ON / 33.6K / G4
048	AD48	12345678901234567890	ON / 33.6K / G4
049			ON / 33.6K / G4
050			ON / 33.6K / G4
051			ON / 33.6K / G4
052			ON / 33.6K / G4
053			ON / 33.6K / G4
054			ON / 33.6K / G4
055			ON / 33.6K / G4
056			ON / 33.6K / G4
057			ON / 33.6K / G4
058			ON / 33.6K / G4
059			ON / 33.6K / G4
060			ON / 33.6K / G4
061			ON / 33.6K / G4
062			ON / 33.6K / G4
063			ON / 33.6K / G4
064			ON / 33.6K / G4
065			ON / 33.6K / G4
066			ON / 33.6K / G4
067			ON / 33.6K / G4
068			ON / 33.6K / G4
069			ON / 33.6K / G4
070			ON / 33.6K / G4

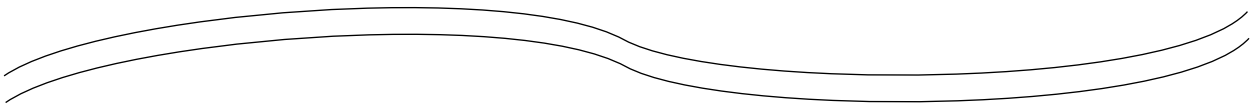

091			ON / 33.6K / G4
092			ON / 33.6K / G4
093			ON / 33.6K / G4
094			ON / 33.6K / G4
095			ON / 33.6K / G4
096			ON / 33.6K / G4
097			ON / 33.6K / G4
098			ON / 33.6K / G4
099			ON / 33.6K / G4
100			ON / 33.6K / G4
101			ON / 33.6K / G4
102			ON / 33.6K / G4
103			ON / 33.6K / G4
104			ON / 33.6K / G4
105			ON / 33.6K / G4
106			ON / 33.6K / G4
107			ON / 33.6K / G4
108			ON / 33.6K / G4
109			ON / 33.6K / G4
110			ON / 33.6K / G4

Figure 1.7 (3/8) Telephone Directory

TELEPHONE DIRECTORY P4

02/14/2000 12:00
ID=ODS

AUTO DIAL	LOCATION ID	TEL NO.	G3-ECHO/G3-RATE/MODE
111	AD111	12345678901234567890123456789012345678901234567890	ON / 33.6K / G4
112	AD112	12345678901234567890123456789012345678901234567890	ON / 33.6K / G4
113	AD113	12345678901234567890	ON / 33.6K / G4
114			ON / 33.6K / G4
115			ON / 33.6K / G4
116			ON / 33.6K / G4
117			ON / 33.6K / G4
118			ON / 33.6K / G4
119			ON / 33.6K / G4
120			ON / 33.6K / G4
121			ON / 33.6K / G4
122			ON / 33.6K / G4
123			ON / 33.6K / G4
124			ON / 33.6K / G4
125			ON / 33.6K / G4
126			ON / 33.6K / G4
127			ON / 33.6K / G4
128			ON / 33.6K / G4
129			ON / 33.6K / G4
130			ON / 33.6K / G4
142			ON / 33.6K / G4
143			ON / 33.6K / G4
144			ON / 33.6K / G4
145			ON / 33.6K / G4
146			ON / 33.6K / G4
147			ON / 33.6K / G4
148			ON / 33.6K / G4
149			ON / 33.6K / G4
150			ON / 33.6K / G4

Figure 1.7 (4/8) Telephone Directory

TELEPHONE DIRECTORY P5

02/14/2000 12:00
ID=ODS

GROUP NUMBER = #1 #2 #3 #4 #5

<#1 ONE TOUCH>
1 2 3 4 5 6 7 8 9 10 11 12 13 14 15 16 17 18 19 20 21 22 23 24 25 26 27 28 29 30
31 32 33 34 35 36 37 38 39 40
<#1 AUTO DIAL>
001 002 003 004 005 006 007 008 009 010 011 012 013 014 015 016 017 018 019 020 021 022 023
024 025 026 027 028 029 030 031 032 033 034 035 036 037 038 039 040 041 042 043 044 045 046
047 048 049 050 051 052 053 054 055 056 057 058 059 060 061 062 063 064 065 066 067 068 069
070 071 072 073 074 075 076 077 078 079 080 081 082 083 084 085 086 087 088 089 090 091 092
093 094 095 096 097 098 099 100 101 102 103 104 105 106 107 108 109 110 111 112 113 114 115
116 117 118 119 120 121 122 123 124 125 126 127 128 129 130 131 132 133 134 135 136 137 138
139 140 141 142 143 145 146 147 148 149 150
<#2 ONE TOUCH>

<#2 AUTO DIAL>

<#3 ONE TOUCH>

<#3 AUTO DIAL>

<#4 ONE TOUCH>

<#4 AUTO DIAL>

<#5 ONE TOUCH>

<#5 AUTO DIAL>

Figure 1.7 (5/8) Telephone Directory

TELEPHONE DIRECTORY P6

02/14/2000 12:00
ID=ODS

GROUP NUMBER = #6 #7 #8 #9 #10

<#6 ONE TOUCH>
1 2 3 4 5 6 7 8 9 10 11 12 13 14 15 16 17 18 19 20 21 22 23 24 25 26 27 28 29 30
31 32 33 34 35 36 37 38 39 40
<#6 AUTO DIAL>
001 002 003 004 005 006 007 008 009 010 011 012 013 014 015 016 017 018 019 020 021 022 023
024 025 026 027 028 029 030 031 032 033 034 035 036 037 038 039 040 041 042 043 044 045 046
047 048 049 050 051 052 053 054 055 056 057 058 059 060 061 062 063 064 065 066 067 068 069
070 071 072 073 074 075 076 077 078 079 080 081 082 083 084 085 086 087 088 089 090 091 092
093 094 095 096 097 098 099 100 101 102 103 104 105 106 107 108 109 110 111 112 113 114 115
116 117 118 119 120 121 122 123 124 125 126 127 128 129 130 131 132 133 134 135 136 137 138
139 140 141 142 143 145 146 147 148 149 150
<#7 ONE TOUCH>

<#7 AUTO DIAL>

<#8 ONE TOUCH>

<#8 AUTO DIAL>

<#9 ONE TOUCH>

<#9 AUTO DIAL>

<#10 ONE TOUCH>

<#10 AUTO DIAL>

Figure 1.7 (6/8) Telephone Directory

TELEPHONE DIRECTORY P7

02/14/2000 12:00
ID=ODS

GROUP NUMBER = #11 #12 #13 #14 #15

<#11 ONE TOUCH>
  1 2 3 4 5 6 7 8 9 10 11 12 13 14 15 16 17 18 19 20 21 22 23 24 25 26 27 28 29 30
 31 32 33 34 35 36 37 38 39 40
<#11 AUTO DIAL>
001 002 003 004 005 006 007 008 009 010 011 012 013 014 015 016 017 018 019 020 021 022 023
024 025 026 027 028 029 030 031 032 033 034 035 036 037 038 039 040 041 042 043 044 045 046
047 048 049 050 051 052 053 054 055 056 057 058 059 060 061 062 063 064 065 066 067 068 069
070 071 072 073 074 075 076 077 078 079 080 081 082 083 084 085 086 087 088 089 090 091 092
093 094 095 096 097 098 099 100 101 102 103 104 105 106 107 108 109 110 111 112 113 114 115
116 117 118 119 120 121 122 123 124 125 126 127 128 129 130 131 132 133 134 135 136 137 138
139 140 141 142 143 145 146 147 148 149 150
<#12 ONE TOUCH>

<#12 AUTO DIAL>

<#13 ONE TOUCH>

<#13 AUTO DIAL>

<#14 ONE TOUCH>

<#14 AUTO DIAL>

<#15 ONE TOUCH>

<#15 AUTO DIAL>

Figure 1.7 (7/8) Telephone Directory

TELEPHONE DIRECTORY P8

02/14/2000 12:00
ID=ODS

GROUP NUMBER = #16 #17 #18 #19 #20

<#16 ONE TOUCH>
   1 2 3 4 5 6 7 8 9 10 11 12 13 14 15 16 17 18 19 20 21 22 23 24 25 26 27 28 29 30
  31 32 33 34 35 36 37 38 39 40
<#16 AUTO DIAL>
 001 002 003 004 005 006 007 008 009 010 011 012 013 014 015 016 017 018 019 020 021 022 023
 024 025 026 027 028 029 030 031 032 033 034 035 036 037 038 039 040 041 042 043 044 045 046
 047 048 049 050 051 052 053 054 055 056 057 058 059 060 061 062 063 064 065 066 067 068 069
 070 071 072 073 074 075 076 077 078 079 080 081 082 083 084 085 086 087 088 089 090 091 092
 093 094 095 096 097 098 099 100 101 102 103 104 105 106 107 108 109 110 111 112 113 114 115
 116 117 118 119 120 121 122 123 124 125 126 127 128 129 130 131 132 133 134 135 136 137 138
 139 140 141 142 143 145 146 147 148 149 150
<#17 ONE TOUCH>

<#17 AUTO DIAL>

<#18 ONE TOUCH>

<#18 AUTO DIAL>

<#19 ONE TOUCH>

<#19 AUTO DIAL>

<#20 ONE TOUCH>

<#20 AUTO DIAL>

Figure 1.7 (8/8) Telephone Directory

1.7 Configuration

1.7.1 Print conditions

1) Setting by user
   Two pages shall be printed out. Setting only is printed on the first page and Dial Parameter setting, SYSTEM DATA PRG. and Fax2Net/ISDN registration.are printed on the second page.

2) Setting by service persons
   Printed as the third page when Service Bit = ON.

<First page>

3) 06: MONITOR VOLUME
   “OFF,” “LOW,” “MIDDLE,” “HIGH-MID,” and “HIGH” are printed.

4) 13: PAPER SIZE
   When 2nd tray is mounted, "13:PAPER SIZE (1st/2nd) is printed out.
   Example: "A4/LETTER", "A4/A4", or "LETTER/A4" are printed out.
   “A4”, “LETTER”, “LGL13”, “LGL14”, “A5”, “A6”, “JIS-B5”

5) 28: TONER SAVE
   “ON,” and “OFF” are printed.

6) 29: CNG COUNT
   “1” - “5” are printed.

7) 30: ISDN DIAL MODE
   “G4,” and “G3” are printed. Left blank when no ISDN board is mounted.

8) 31: SPEECH RECEIVE
   “ON,” and “OFF” are printed. Left blank when no ISDN board is mounted.

<Second page>

9) DIAL PARAMETER: All parameters are printed when Service Bit = ON.
   Some parameters are left blank depending on the Country Code (XPARA bit) when Service Bit =OFF.

10) TEL N0.: Up to 20 digits are printed.

11) CALL BACK N0.: Up to 20 digits are printed.

12) FORWARDING N0.: Up to 40 digits are printed for OKIFAX 5650.

13) SERVER TEL N0.: When FAX2NET FUNCTION is set to ON, up to 40 digits are printed for OKIFAX 5650.

14) ACCOUNT N0.: Up to 14 digits are printed when FAX2NET FUNCTION is set to ON.

15) PREFIX N0.1 - N0.3: Up to 10 digits of prefix No. are printed when FAX2NET FUNCTION is set to ON.

16) ISDN COUNTRY CODE: Up to 3 digits are printed when an ISDN board is mounted.

17) ISDN(G4) N0.: Up to 20 digits are printed when an ISDN board is mounted.

18) ISDN(G4) ID: Up to 10 digits are printed when an ISDN board is mounted.

19) ISDN SUB N0.: Up to 19 digits are printed when an ISDN board is mounted.

20) ISDN CALLED N0.: Up to 20 digits are printed when an ISDN board is mounted.

21) Dial parameters other than REDIAL TRIES, REDIAL INTERVAL, PBX LINE, AUTO START, and DIAL PREFIX are left blank when an ISDN board is mounted and Service Bit = OFF.

22) 33: V.34 TX RETRY
"ON," "OFF" are printed.

23) 34: STYMBOL. RATE
"2400," "2800," "3200," and "3429" are printed.

24) 35: LEASED LINE
"ON," "OFF" are printed.

25) 36: CED SEND
"ON," "OFF" are printed.

26) 37: FAX2NET FUNCTION
"ON," "OFF" are printed.

27) 38: TOP FEED
"-10MM," "-9MM," " —, " 0MM," "+1MM'" — "+9MM"
39: BOTTOM FEED
"-2MM," —, "0MM," "+1MM" —"+10MM"

28) 40: G3/G4 LEARNING
"ON," and "OFF" are printed. Left blank when no ISDN board is mounted.

29) 41: LLC CHECK
ON," and "OFF" are printed. Left blank when no ISDN board is mounted.

30) 42: G3 SETUP BC
"3.1K AUDIO" and ":SPEECH" are printed. Left blank when no ISDN board is mounted.

31) 43: G3 FALLBACK CAUSE
Out of the following 54 service codes, only the codes corresponding to G3 fallback are printed. Service codes excluding fallback are left blank.
Left blank when ISDN board is not mounted.

BA01	BA02	BA03	BA06	BA07	BA10	BA11	BA12	BA13	BA15
BA16	BA1A	BA1B	BA1C	BA1D	BA1E	BA1F	BA22	BA26	BA29
BA2A	BA2B	BA2C	BA2F	BA31	BA32	BA39	BA3A	BA3F	BA41
BA42	BA45	BA46	BA4F	BA51	BA52	BA53	BA54	BA55	BA56
BA58	BA5B	BA5F	BA60	BA61	BA62	BA63	BA64	BA65	BA66
BA6F	BA7F	BB01	BB07						

CONFIGURATION P1

02/14/2000 12:00
ID=ODS

FUNCTION LIST

01:MCF (SINGLE-LOC.) OFF	02:MCF (MULTI-LOC.) ON	03:ERR.REPORT (MCF) ON
04:IMAGE IN MCF ON	05:SENDER ID. ON	06:MONITOR VOLUME LOW
07:BUZZER VOLUME MIDDLE	08:CLOSED NETWORK OFF	09:TX MODE DEFAULT STD/NORMAL
10:T/F TIMER PRG. 35SEC	11:RING RESPONSE 1 RING	12:DISTINCTIVE RING OFF
13:PAPER SIZE A4	14:USER LANGUAGE ENGLISH	15:INCOMING RING ON
16:REMOTE RECEIVE OFF	17:MEM./FEEDER SWITCH MEMORY	18:POWER SAVE MODE ON
19:ECM FUNCTION ON	20:REMOTE DIAGNOSIS OFF	21:PC/FAX SWITCH ON
22:NO TONER MEM.RX OFF	23:MEM.FULL SAVE ON	24:CONTINUOUS TONE OFF
25:INSTANT DIAL ON	26:RESTRICT ACCESS OFF	27:WIDTH REDUCTION OFF
28:TONER SAVE OFF	29:CNG COUNT 1	30:ISDN DIAL MODE G4
31:SPEECH RECEIVE ON		

Figure 1.8 (1/3) Configuration Report (User)

CONFIGURATION P2

```
                                                    02/14/2000  12:00
                                                    ID=ODS

DIAL PARAMETER

    REDIAL TRIES         3 TRY                 REDIAL INTERVAL     3 MIN
    DIAL TONE DETECT     OFF                   BUSY TONE DETECT    ON
    MF(TONE)/DP(PULSE)   MF                    PULSE DIAL RATE     10 PPS
    PULSE MAKE RATIO     39%                   PULSE DIAL TYPE     N
    MF(TONE) DURATION    100MS                 PBX LINE            OFF
    PBX TYPE             NORMAL                AUTO START          ON
    DIAL PREFIX          OFF

TEL NO.        = 12345678901234567890
CALL BACK NO.  = 12345678901234567890
FORWARDING NO. =

SERVER TEL NO. = 123456789012345678901234567890123456789012
ACCOUNT NO.    = 12345678901234
PREFIX NO.1    = 1234567890
       NO.2    = 1234567890
       NO.3    = 1234567890

ISDN COUNTRY CODE  = 081
ISDN(G4) NO.       = 12345678901234567890
ISDN(G4) ID        = ABCDEFGHIJ
ISDN SUB NO.       = 1234567890123456789
ISDN CALLED NO.    = 12345678901234567890
```

Figure 1.8 (2/3) Configuration Report (User)

CONFIGURATION P3

```
                                                    02/14/2000  12:00
                                                    ID=ODS

FUNCTION LIST

   01:SERVICE BIT            02:MONITOR CONT.          03:COUNTRY CODE
      ON                        ON                        GER

   04:TIME/DATE PRINT        05:TSI PRINT              06:TAD MODE
      OFF                       ON                        TYPE2

   07:REAL TIME DIAL         08:TEL/FAX SWITCH         09:MDY/DMY
      TYPE2                     ON                        MDY

   10:LONG DOC. SCAN         11:TONE FOR ECHO          12:MH ONLY
      ON                        OFF                       OFF

   13:H/MODEM RATE           14:T1(TX) TIMER VALUE     15:T1(RX) TIMER VALUE
      33.6K                     059                       035

   16:T2 TIMER VALUE         17:DIS BIT32              18:ERR CRITERION VALUE
      130                       ON                        10

   19:OFF HOOK BYPASS        20:NL EQUALIZER           21:ATTENUATOR
      OFF                       OKM                       10 DB

   22:T/F TONE ATT           23:MF. ATT                24:RING DURA. * 10MS
      10 DB                     3 DB                      12

   25:CML TIMING * 100MS     26:LED HEAD STROBE        27:MEDIA TYPE
      03                        10100                     MEDIUM

   28:TR LATCH CURRENT       29:NSF SWITCH             30:ID/TSI PRIORITY
      0                         OFF                       ID

   31:TONER COUNT CLEAR      32:PARALLEL PICK UP       33:V.34 TX RETRY
      OFF                       OFF                       ON

   34:SYMBOL RATE            35:LEASED LINE            36:CED SEND
      3429                      OFF                       ON

   37:FAX2NET FUNCTION       38:TOP FEED               39:BOTTOM FEED
      ON                        OMM                       OMM

   40:G3/G4 LEARNING         41:LLC CHECK              42:G3 SETUP BC
      ON                        OFF                       3.1K AUDIO

   43:G3 FALLBACK CAUSE
      BA01  BA02  BA03  BA06  BA07  BA10  BA11  BA12  BA13  BA15
      BA16  BA1A  BA1B  BA1C  BA1D  BA1E  BA1F  BA22  BA26  BA29
      BA2A  BA2B  BA2C  BA2F  BA31  BA32  BA39  BA3A  BA3F  BA41
      BA42  BA45  BA46  BA4F  BA51  BA52  BA53  BA54  BA55  BA56
      BA58  BA5B  BA5F  BA60  BA61  BA62  BA63  BA64  BA65  BA66
      BA6F  BA7F  BB01  BB07
```

Figure 1.8 (3/3) Configuration Report (Service bit = ON)

ACTIVE MEMORY FILES

07/01/2000 17:05
ID=ODC

RECEPTION

ENTRIES	PAGES
05	20

PERSONAL BOX

BOX NO.	MODE	ENTRIES	PAGES
01	CONF	03	20
02	CONF	01	02
05	POLL	01	05

POLLING TX/RX

DATE	TIME	DISTANT STATION ID	MODE	PAGES
			POLL TX	03
07/02	12:05	OKI	POLL RX	

TRANSMISSION

DATE	TIME	DIDTANT STATION ID	MODE	PAGES
07/01	20:00	OKI DATA SYSTEMS	TX	03
07/01	12:03	0273242117	TX	01
07/01	19:00	ODC TAKASAKI	TX	02

Figure 1.9 Active Memory Files

G3 Protocol Dump Image

Print conditions:

- Modem trace information for each TX/RX is printed. (Information for RX is added on 2nd page.)
- Modem result code is printed.
- JM information is moved in the arrangement of CM information.
- 00 is printed always since the received SID on the 2nd page is invalid.

PROTOCOL DUMP P1

```
                                                                    12/24/1998  19:00
                                                                    ID=OKI TAKASAKI


        DATE      TIME      S,R-TIME   DISTANT STATION ID       MODE      PAGES     RESULT

        12/24     18:56      00'33"    123456789012345678901234  TX         002      OK    0000

FCF
TX |          NSS     PPS_MPS   PPS_EOP     DCN
RX | NSF  DIS     CFR        MCF        MCF

TX |
RX |

TX |
RX |

TX |
RX |

TRANSMITTED FRAME

DIS
00 00 00 00 00 00 00 00 00 00 00 00 00 00 00 00 00 00 00
DTC
00 00 00 00 00 00 00 00 00 00 00 00 00 00 00 00 00 00 00
DIS
00 00 00 00 00 00 00 00 00 00 00 00 00 00 00 00 00 00 00
NSF
00 00 00 00 00 00 00 00 00 00 00 00 00 00 00 00 00 00 00 00 00 00 00 00 00 00 00 00 00 00
00 00 00 00 00 00 00 00 00 00 00 00 00 00 00 00 00 00 00 00 00 00 00 00 00 00 00 00 00 00
00 00 00 00 00 00 00 00 00 00 00 00 00 00 00 00 00 00 00 00 00 00 00 00 00 00 00 00 00 00
00 00 00 00
NSS
FF C8 C4 00 00 84 80 30 40 E4 10 40 B8 39 20 0C 0C 0C 0C 30 82 4A AA 82 42 92 12 CA 04 92 D2 F2
80 40 80 10 00 00 00 00 00 00 00 00 00 00 00 00 00 00 00 00 00 00 00 00 00 00 00 00 00 00
00 00 00 00 00 00 00 00 00 00 00 00 00 00 00 00 00 00 00 00 00 00 00 00 00 00 00 00 00 00
00 00 00 00
NSC
00 00 00 00 00 00 00 00 00 00 00 00 00 00 00 00 00 00 00 00 00 00 00 00 00 00 00 00 00 00 00 00
00 00 00 00 00 00 00 00 00 00 00 00 00 00 00 00 00 00 00 00 00 00 00 00 00 00 00 00 00 00 00 00
00 00 00 00 00 00 00 00 00 00 00 00 00 00 00 00 00 00 00 00 00 00 00 00 00 00 00 00 00 00 00 00
00 00 00 00
CSI/CIG/TSI
00 00 00 00 00 00 00 00 00 00 00 00 00 00 00 00 00 00 00
SEP/SUB
00 00 00 00 00 00 00 00 00 00 00 00 00 00 00 00 00 00 00
SID
00 00 00 00 00 00 00 00 00 00 00 00 00 00 00 00 00 00 00
V34
CM              JM
00 00 00 00     00 00 00 00

SYMBOL RATE(SPS)             =
DATA SIGNALLING RATE(BPS)    =
RESULT 00

MODEM TRACE
00 00 00 00 00 00 00 00 00 00 00 00 00 00 00 00 00 00 00 00 00 00 00 00 00 00 00 00 00 00 00 00
00 00 00 00 00 00 00 00 00 00 00 00 00 00 00 00 00 00 00 00 00 00 00 00 00 00 00 00 00 00 00 00
00 00 00 00 00 00 00 00 00 00 00 00 00 00 00 00 00 00 00 00 00 00 00 00 00 00 00 00 00 00 00 00
```

Figure 1.10 (1/2) Protocol Dump Report (G3)

PROTOCOL DUMP P2

```
                                                                12/24/1998  19:00
                                                                ID=OKI TAKASAKI


RECEIVED FRAME

DIS
FF C8 01 00 73 17 22 00 00 00 00 00 00 00 00 00 00 00 00 00
DTC
00 00 00 00 00 00 00 00 00 00 00 00 00 00 00 00 00 00 00 00
DCS
00 00 00 00 00 00 00 00 00 00 00 00 00 00 00 00 00 00 00 00
NSF
FF C0 04 00 00 84 80 08 40 F4 10 40 F9 7D 20 0C 0C 0C 0C 90 F2 52 72 F2 12 04 92 D2 F2 80 F0 80
40 80 50 00 00 00 00 00 00 00 00 00 00 00 00 00 00 00 00 00 00 00 00 00 00 00 00 00 00 00 00
00 00 00 00 00 00 00 00 00 00 00 00 00 00 00 00 00 00 00 00 00 00 00 00 00 00 00 00 00 00 00
00 00 00 00
NSS
00 00 00 00 00 00 00 00 00 00 00 00 00 00 00 00 00 00 00 00 00 00 00 00 00 00 00 00 00 00 00
00 00 00 00 00 00 00 00 00 00 00 00 00 00 00 00 00 00 00 00 00 00 00 00 00 00 00 00 00 00 00
00 00 00 00 00 00 00 00 00 00 00 00 00 00 00 00 00 00 00 00 00 00 00 00 00 00 00 00 00 00 00
00 00 00 00
NSC
00 00 00 00 00 00 00 00 00 00 00 00 00 00 00 00 00 00 00 00 00 00 00 00 00 00 00 00 00 00 00 00
00 00 00 00 00 00 00 00 00 00 00 00 00 00 00 00 00 00 00 00 00 00 00 00 00 00 00 00 00 00 00 00
00 00 00 00 00 00 00 00 00 00 00 00 00 00 00 00 00 00 00 00 00 00 00 00 00 00 00 00 00 00 00 00
00 00 00 00
CSI/CIG/TSI
00 00 00 00 00 00 00 00 00 00 00 00 00 00 00 00 00 00 00 00
SEP/SUB
00 00 00 00 00 00 00 00 00 00 00 00 00 00 00 00 00 00 00 00
SID
00 00 00 00 00 00 00 00 00 00 00 00 00 00 00 00 00 00 00 00
V34
CM              JM
00 00 00 00     00 00 00 00

MODEM TRACE
00 00 00 00 00 00 00 00 00 00 00 00 00 00 00 00 00 00 00 00 00 00 00 00 00 00 00 00 00 00 00 00
00 00 00 00 00 00 00 00 00 00 00 00 00 00 00 00 00 00 00 00 00 00 00 00 00 00 00 00 00 00 00 00
00 00 00 00 00 00 00 00 00 00 00 00 00 00 00 00 00 00 00 00 00 00 00 00 00 00 00 00 00 00 00 00
```

Figure 1.10 (2/2) Protocol Dump Report (G3)

1.8 Self Diagnosis Report

1.8.1 Print conditions

1) The following self diagnosis results are always printed.
   - CPU - ROM, FLASH - PROGRAM / LANGUAGE / DEFAULT version read and hush check.
   - CPU-RAM, FLASH - RAM read/write check
   - Image processor LSI RAM check
   - Setting DEFAULT TYPE and reading clock at self diagnosis execution.

2) The following printing differs depending on the condition of option provided or not.
   *1 "4M" is printed for OKIFAX 5650.
   *2 Printed only when MFP option is provided. "MFG:," "MDL:," and "DES:" information is printed out of ID character strings of PnP device. Small letters can be printed. The maximum number of each of letters and characters shall be 45.
   *3 Printing is available for OKIFAX 5650 only when option memory is mounted. ("2M." or "4M")
   *4 Printed only when ISDN option is provided.
   When performing self diagnosis, ISDN board test is executed and its result (error information at power on is partially adopted) is printed.
   The print contents at ISDN error are as shown below.

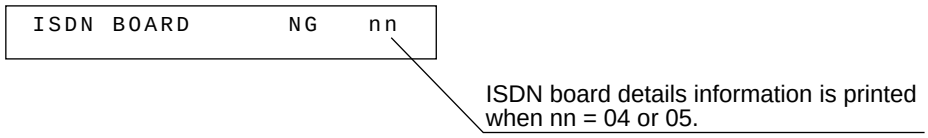

nn=01: Waiting PC loading
When turning on power, BOOT2 signal from HOST side was in PC loading mode.

nn=02: Board faulty
When turning on power, PROGRAM HUSH of ISDN board was no good.

nn=03: Board faulty
Initial sequence between boards was not executed in spite of elapse of 10 seconds after turning on power. (Status window did not obtain normal value.)

nn=04: Board faulty
Initial sequence of ISDN LSI was not executed when turning on power. (No response to command, Response no good)

nn=05: ISDN LSI faulty
ISDN LSI test function (ROM/RAM test, loop test) resulted no good.

Report Image

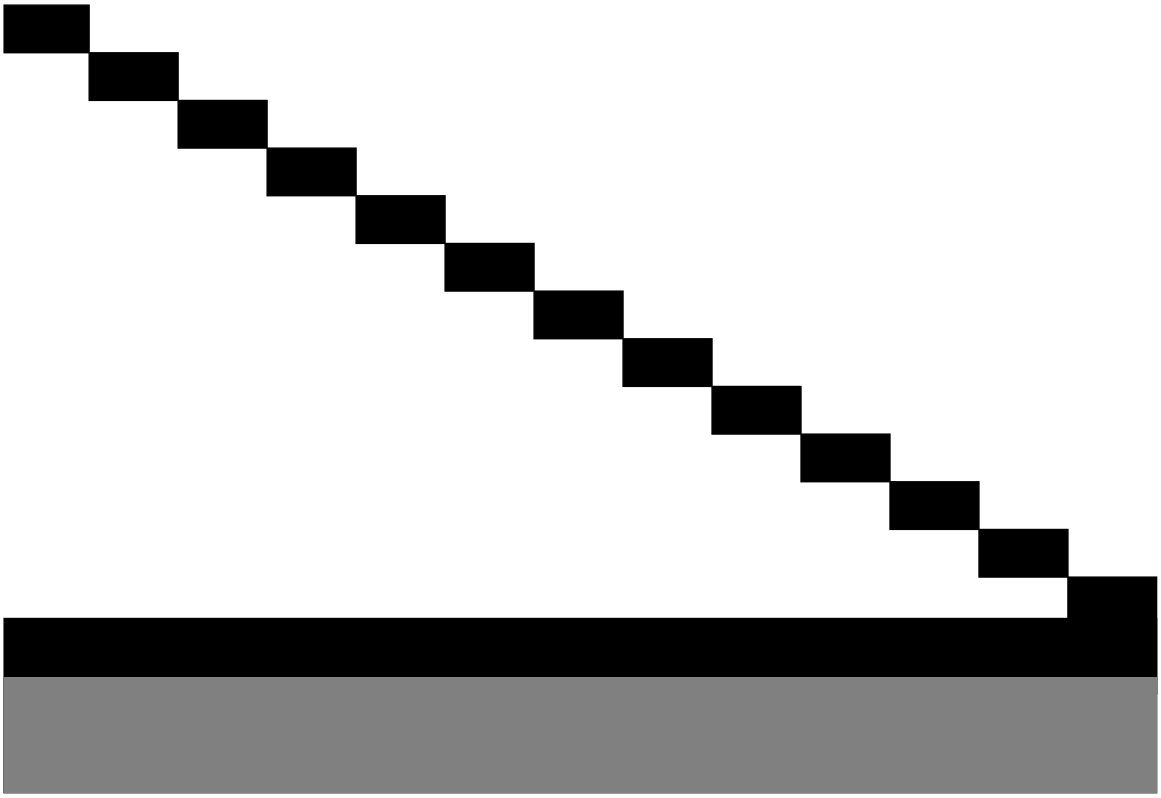

```
CPU-ROM   VERSION  aaaa
          HASH     OK   hhhh
CPU-RAM            OK
PROGRAM   VERSION  aaaa
          HASH     OK   hhhh
LANGUAGE  VERSION  aaaa
          HASH     OK   hhhh
DEFAULT   VERSION  aaaa
          HASH     OK   hhhh
RAM1      4M       OK                          *1
RAM2               OK
DEFAULT TYPE       01   03/03/2000  12:00
DEVICE ID          MFG:OKI DATA CORP;          *2
                   MDL:FX-046FAX;              *2
                   DES:OKI FX-046FAX;          *2
OPT-RAM   4M       OK                          *3
ISDN BOARD         OK
CPU-ROM   VERSION  aaaa
          HASH     OK   hhhh
CPU-RAM            OK
PROGRAM   VERSION  aaaa
          HASH     OK   hhhh
RAM       2M       OK
DPRAM     2K       OK
```

a: Alphabet and digit
h: Hexadecimal numeral
n: Digit

Figure 1.11 Self Diagnosis

G4 Protocol Dump
The printing image is as follows:

PROTOCOL DUMP P1

08/25/2000 19:00
ID=OKI TAKASAKI

DATA	TIME	S,R-TIME	DISTANT STATION ID	MODE	PAGES	RESULT
04/19	14:49	00’07"	OKI SHIBAURA(6412)	TX-G4	02	OK 0000

Dch.

TX	SETUP CONN-ACK +Bch+ DISC REL-C
RX	STATUS SETUP-ACK CONN +Bch+ REL
TX	
RX	

Bch.

TX	SABM SQ CR TCR CSS CDCL CDS CDUI CDPB CDUI CDPB CDUI CDPB CDUI CDUI
RX	UA SF CC TCA RSSP RDCLP RDPBP RDPBP RDPBP
TX	CDE CQ DISC
RX	RDEP CF UA
TX	
RX	
TX	
RX	

COMMN MODE
T.90

COMMN SPEED
64 kbps

FLOW CONTROL PA RAM.
2048(SPS)/7(SWS)/2048(RPS)/7(RWS)

TID
081-0273242117 =OKITAKASAKI

SETUP
08 01 05 05 04 02 88 90 6C 02 00 80 70 0B 80 30 32 37 33 32 38 30 30 30 31 7C 03 88 90 A9 7D 02
91 A1 00 00 00 00 00 00 00 00 00 00 00 00 00 00 00 00 00 00 00 00 00 00 00 00 00 00 00 00 00 00
00 00 00 00 00 00 00 00 00 00 00 00 00 00 00 00 00 00 00 00 00 00 00 00 00 00 00 00 00 00 00 00
00 00 00 00 00 00 00 00 00 00 00 00 00 00 00 00 00 00 00 00 00 00 00 00 00 00 00 00 00 00 00 00
00 00 00 00 00 00 00 00 00 00 00 00 00 00 00 00 00 00 00 00 00 00 00 00 00 00 00 00 00 00 00 00
00 00 00 00 00 00 00 00 00 00 00 00 00 00 00 00 00 00 00 00 00 00 00 00 00 00 00 00 00 00 00 00
00 00 00 00 00 00 00 00 00 00 00 00 00 00 00 00 00 00 00 00 00 00 00 00 00 00 00 00 00 00 00 00
00 00 00 00 00 00 00 00 00 00 00 00 00 00 00 00 00 00 00 00 00 00 00 00 00 00 00 00 00 00 00 00

DISC
45 16

Figure 1.12 (1/2) Protocol Dump Report P1 (G4)

PROTOCOL DUMP P2

```
CR/CN
00 00 00 00 00 00 00 00 00 00 00 00 00 00 00 00 00 00 00 00 00 00 00 00 00 00 00 00 00 00 00 00
00 00 00 00 00 00 00 00 00 00

CA/CC
00 00 00 00 00 00 00 00 00 00 00 00 00 00 00 00 00 00 00 00 00 00 00 00 00 00 00 00 00 00 00 00
00 00 00 00 00 00 00 00 00 00

CQ/CI
00 00 00 00 00

RQ/RI
00 00 00 00 00

SQ/SI
00 00 00 00 00

TBR
 00

TCC
00

TCR
09 E0 00 00 00 01 00 C0 01 0B 00 00 00 00 00 00

TCA
09 D0 00 01 00 01 00 C0 01 0B 00 00 00 00 00 00

CSS
0D 6F 01 2A 0A 18 30 38 31 2D 3D 20 20 20 20 20 20 20 20 20 20 20 20 20 20 20 20 20 20 20 0B 0E
39 37 2D 30 38 2D 32 37 2D 31 34 2D 34 34 02 03 0E 01 01 08 01 01 C1 08 A4 06 80 01 02 81 01 00
E8 2F 00 01 79 00 E0 1C C1 10 50 61 6E 61 66 61 78 20 55 46 2D 42 38 30 20 20 C2 02 36 35 C4 04
30 30 30 30 E1 0B E0 06 C0 01 01 C1 01 01 C1 01 00 00 00 00 00 00 00 00 00 00 00 00 00 00 00 00
00 00 00 00 00 00 00 00 00 00 00 00 00 00 00 00 00 00 00 00 00 00 00 00 00 00 00 00 00 00 00 00
00 00 00 00 00 00 00 00 00 00 00 00 00 00 00 00 00 00 00 00 00 00 00 00 00 00 00 00 00 00 00 00

RSSP/RSSN
0E 69 01 2A 09 18 30 38 31 2D 3D 20 20 20 20 20 20 20 20 20 20 20 20 20 20 20 20 20 20 20 0B 0E
39 38 2D 30 36 2D 30 32 2D 31 33 3A 34 36 02 03 0E 01 01 08 01 01 C1 08 A4 06 80 01 02 81 01 00
E8 29 00 01 79 00 E0 16 C1 10 50 61 6E 61 66 61 78 20 55 46 2D 42 38 30 20 20 C2 02 36 35 E1 0B
E0 06 C0 01 01 C1 01 01 C1 01 00 00 00 00 00 00 00 00 00 00 00 00 00 00 00 00 00 00 00 00 00 00
00 00 00 00 00 00 00 00 00 00 00 00 00 00 00 00 00 00 00 00 00 00 00 00 00 00 00 00 00 00 00 00
00 00 00 00 00 00 00 00 00 00 00 00 00 00 00 00 00 00 00 00 00 00 00 00 00 00 00 00 00 00 00 00

CDCL
3D 58 12 01 3C C1 4D A4 4B 80 01 02 81 01 00 A2 3C A2 32 30 08 80 02 26 C0 81 02 36 CE 30 08 80
02 2F 6D 81 02 43 2C 30 08 80 02 2F 6C 81 02 43 2C 30 08 80 02 2E 23 81 02 41 25 30 08 80 02 36
CE 81 02 4D 80 A4 06 8B 01 04 8B 01 01 E4 05 E1 03 C0 01 01 E8 04 00 01 49 00 00 00 00 00 00 00
00 00 00 00 00 00 00 00 00 00 00 00 00 00 00 00 00 00 00 00 00 00 00 00 00 00 00 00 00 00 00 00

RDCLP
3E 40 C1 3E A4 3C 80 01 02 81 01 00 A2 25 A2 1E 30 08 80 02 26 C0 81 02 36 CE 30 08 80 02 2F 6C
81 02 43 2C 30 08 80 02 2F 6D 81 02 43 2C A4 03 8B 01 04 E4 0D E0 06 02 01 02 02 01 03 E1 03 C0
01 01 00 00 00 00 00 00 00 00 00 00 00 00 00 00 00 00 00 00 00 00 00 00 00 00 00 00 00 00 00 00
00 00 00 00 00 00 00 00 00 00 00 00 00 00 00 00 00 00 00 00 00 00 00 00 00 00 00 00 00 00 00 00
CDS
2D 40 29 03 30 30 31 C1 39 A4 37 80 01 02 81 01 00 A2 28 A2 1E 30 08 80 02 26 C0 81 02 36 CE 30
08 80 02 2F 6D 81 02 43 2C 30 08 80 02 2F 6C 81 02 43 2C A4 06 8B 01 04 8B 01 01 E4 05 E1 03 C0
01 01 00 00 00 00 00 00 00 00 00 00 00 00 00 00 00 00 00 00 00 00 00 00 00 00 00 00 00 00 00 00
00 00 00 00 00 00 00 00 00 00 00 00 00 00 00 00 00 00 00 00 00 00 00 00 00 00 00 00 00 00 00 00
CDUI
01 00 A2 03 02 01 00 A2 1B 02 01 02 31 16 A4 08 80 02 26 C0 81 02 36 CE A6 05 A1 03 82 01 01 E9
03 C0 01 00 A3 80 31 06 A2 04 80 02 06 C0 24 80 04 82 07 90 01 01 00 00 00 00 00 00 00 00 00 00
01 01 00 00 00 00 00 00 00 00 00 00 00 00 00 00 00 00 00 00 00 00 00 00 00 00 00 00 00 00 00 00
00 00 00 00 00 00 00 00 00 00 00 00 00 00 00 00 00 00 00 00 00 00 00 00 00 00 00 00 00 00 00 00
```

Figure 1.12 (2/2) Protocol Dump Report P2 (G4)

Table 1.3 Multiple Function Combinations for Transmissions

○ : Combination Possible
× : Combination Impossible

	Single Loc. TX	Broadcast TX	Delayed TX	Confidential TX	Relay Broadcast Initiate	Manual TX	Chain Dialing	Automatic Alternate Selecting Call	Closed User Group	Page Retransmit	Redial if Communication Error in Memory TX	Sender ID	Voice Request (Initiate)	Voice Request (Reception)	Call Back Message	Broadcast Entry Report	MCF (Single)	MCF (Error)	MCF (Multi)	MCF (with Image)
Feeder TX	○	×	○	○	○	○	○	○	○	×	×	○	○	○	○	×	○	○	×	×
Instant Dialing	○	×	×	○	○	×	○*1	○	○	○*2	○*2	○*3	×	×	×	×	○	○	×	○*4
Memory TX	○	○	○	○	○	×	×	○	○	○	○	○	×	×	×	○	○	○	○	○
Single Loc. TX		×	○	○	○	○	○	○	○	○	○	○	○	○	○	×	○	○	×	×
Broadcast TX			○	×	×	×	×	×	○	○	○	○	×	×	×	○	×	○	○	○
Delayed TX				×	×	×	×	○	○	○	○	○	○	○	○	○	○	○	○	○
Confidential TX					×	×	×	×	○	×	×	○	×	×	×	×	○	○	×	×
Relay Broadcast Initiate						×	×	×	○	×	×	○	×	×	×	×	○	○	×	×
Manual TX							○	×	○	×	×	○	○	○	○	×	○	○	×	×
Chain Dialing								×	○	×	×	○	○	○	○	×	○	○	×	×
Automatic Alternate Selecting Call									○	○	○	○	○	○	○	×	○	○	○	○
Closed User Group										○	○	○	○	○	○	○	○	○	○	○
Page Retransmit											○	○	×	×	×	○	○	○	○	○
Redial if Communication Error in Memory TX												○	×	×	×	○	○	○	○	○
Sender ID													○	○	○	○	○	○	○	○
Voice Request (Initiate)														○	○	×	○	○	×	×
Voice Request (Reception)															○	×	○	○	×	×
Call Back Message																×	○	○	×	×
Broadcast Entry Report																	×	○	○	○
MCF (Single)																		×	×	○
MCF (Error)																			○	○

*1 Only previous call origination
*2 Depending on the conditions of image memory capacity.
*3 TSI/CSI and Personal ID are impossible.
*4 When memory full does not occur during reading.

Table 1.4 Multiple Function Combinations for Reception

○ : Combination Possible
× : Combination Impossible

	In-between Memory Reception	Memory Reception	Memory Only Reception	Confidential Reception	Closed Network	TSI Print	TIME/DATE Print	Voice Request (Initiate)	Voice Request (Reception)	Manual Reception	Remote Reception	Automatic Answer [FAX]	TEL/FAX Automation Switch	TAD
Paper Reception	○	○	×	×	○	○	○	○	○	○	○	○	○	○
In-between Memory Reception		×	×	×	○	○	○	○	○	○	○	○	○	○
Memory Reception			*1	×	○	○	○	×	×	○	○	○	○	○
Memory Only Reception				○	○	○	○	×	×	*2	*2	○	○	○
Confidential RX					○	○	○	×	×	○	○	○	○	○
Closed Network						○	○	○	○	○	○	○	○	○
TSI Print							○	○	○	○	○	○	○	○
TIME/DATE Print								○	○	○	○	○	○	○
Voice Request (Initiate)									○	○	○	○	○	○
Voice Request (Reception)										○	○	○	○	○
Manual Reception											×	○	○	○
Remote Reception												○	○	○

*1: Handled as memory reception if the real time print is not available at the cancellation of the mode.
*2: Handled as paper reception.

Polling TX

Table 1.5 Function Combination for Polling TX

	Feeder TX	Memory TX	Closed Network	Page Re-transmit	Redial for Memory TX (Error)	Sender ID	Voice Request (Initiate)	Voice Request (Reception)	Call Back Message	MCF (Single)	MCF (Error)	MCF (Mulriple)	Manual TX	Automatic Answer [FAX]	TEL/FAX	TAD	Memory Only Reception
Polling TX	○	○	○	○	×	○	×	×	×	○	○	×	×	○	○	○	○

Note: When reception mode is PC, Polling (TX) from PC.

Polling RX

Table 1.6 Function Combination for Polling RX

	Paper Reception	In-between Memory Reception	Initial Memory Reception	Memory Only Reception	Closed Network	TSI Print	TIME/DATE Print	Voice Request (Initiate)	Voice Request (Reception)	Manual Reception	Single Location	Broadcast	Chain Dialling	Automatic Alternate Selecting Call	MCF (Single)	MCF (Error)	MCF (Multiple)
Polling RX	○	○	×	×	○	○	○	×	×	*1	○	×	×	×	×	×	×

*1 It is possible when remote machine sends DTC.

Note: Even if the reception mode is PC, it follows FAX operation.

Table 1.7 Function Combinations during Communications

Communication Mode \ Functions					Automatic Alternate Selecting Call	Closed Network	Sender ID *4	Page Retransmit	Voice Request (Initiate)	Stop	Voice Request (Reception)	TX Preparation	Call Back Message	Redial if Communication Error in Memory TX
TX	Feeder	Manual Calling			×	○	○	×	○	○	○	× *1	○	×
		Automatic Call Origination	Confidential Initiate		×	○	○	×	×	○	×	× *1	×	×
			Relay Broadcast Initiate		×	○	○ *2	×	×	○	×	× *1	×	×
			Delayed		○	○	○	×	○	○	○	× *1	○	×
					○	○	○	×	○	○	○	× *1	○	×
		Auto Reception	Polled		×	○	○	×	×	○	×	× *1	×	×
	Memory	Automatic Call Origination	Delayed	Single	○	○	○	○ *3	×	○	×	○	×	○
				Broadcast	○	○	○ *2	○ *3	×	○	×	○	×	○
				Single	○	○	○	○ *3	×	○	×	○	×	○
				Broadcast	○	○	○ *2	○ *3	×	○	×	○	×	○
				Poll	×	○	○	×	×	○	×	○	×	×
	Instant dialing (single)				○	○	○ *6	×	×	○	×	× *1	×	○ *5

Communication Mode \ Functions				Automatic Alternate Selecting Call	Closed Network	TSI/ TIME/DATE Printing	In-between Memory Reception	Voice Request (Initiate)	Stop	Voice Request (Reception)	TX Preparation		
RX	Memory	Manual/ Automatic	Confidential	×	○	○	×	×	×	×	○		
			Memory Only Reception	×	○	○	×	×	×	×	○		
			Initial Memory Reception	×	○	○	×	×	×	×	○		
	Paper			×	○	○	○	○	×	○	○		
		Automatic Call Origination	Polling	×	○	○	○	×	×	×	○		

*1: It is possible after the end of sanning.
*2: Remote locations are not displayed.
*3: In case of Non-ECM mode.
*4: Session number is available.
*5: Depending on the conditions of memory available.
*6: TSI/CSI and Personal ID are not displayed.

Table 1.8 Preparation TX as Dual Access

1'st	2'nd	PC1 ON				
		Reception	Prefeed	Remote input display	Preparation TX	Scanning to Memory
ON HOOK	Standby	○	○	○	○	○
	During FAX Calling	×	○	×	×	○
Call Reception	During RING RESPONSE	×	○	○	○	○
	During detection of TEL/FAX	×	○	×	×	×
	During TAD detection	×	○	×	×	×
	1st Phase B	×	○	○	○	○
Feeder TX	Calling ~ Transmission	×	×	×	×	○
	Transmission after scanning	×	○	○	○	○
Memory TX	During Scanning	○	×	×	×	○
	Dialling and Calling	×	○	○	○	○
	During TX	×	○	○	○	○
Polling RX	Dialling and Calling	×	○	○	○	○
Memory RX		×	○	○	○	○
Paper RX	Reception and print	×	○	○	○	○
	Residual Print Processing	○	○	○	○	○
	Memory reception	×	○	○	○	○
During voice request is initiated.		×	○	×	×	×
During copy		○	○	×	×	×
During automatic printing of received messages		○	○	○	○	○
During automatic printing of reports		○	○	○	○	○
During operation		×	○	×	×	×

* Operation during communication is not determined yet.

Table 1.9 (1/2) User Default Setting

No.	User Setting Items	Setting Selection	1 ODA	2 LTA	3 E-INT	4 E-GER	5 E-FRE	6 0-AUS	7 0-NZL	8 0-SIN	9 0-HNG	10 L-AG	10 IRL	11 DEN	13 SWE	Note
1	MCF (single-loc.)	ON/OFF	OFF	OFF	OFF	OFF	OFF	OFF	ON	OFF	OFF	OFF	OFF	ON	OFF	
2	MCF (multi-loc.)	ON/OFF	ON	ON	OFF	ON	OFF	OFF	ON	OFF	OFF	OFF	OFF	ON	ON	
3	ERR.REPORT (MCF.)	ON/OFF	ON	ON	OFF	ON	OFF	ON	ON	ON	OFF	OFF	OFF	ON	ON	
4	IMAGE IN MCF.	ON/OFF	ON	ON	ON	ON	ON	ON	ON	ON	ON	ON	ON	ON	ON	
5	SENDER ID	ON/OFF	ON	ON	ON	ON	ON	ON	ON	ON	ON	ON	ON	ON	ON	
6	MONITOR VOLUME	OFF/LOW/HIGH	MID	MID	MID	MID	MID	MID	MID	MID	MID	MID	MID	MID	MID	
7	BUZZER VOLUME	LOW/MID/HIGH	MID	MID	MID	MID	MID	MID	MID	MID	MID	MID	MID	LOW	MID	
8	CLOSED NETWORK	OFF/ T/R / RX	OFF	OFF	OFF	OFF	OFF	OFF	OFF	OFF	OFF	OFF	OFF	OFF	OFF	
9	TX MODE DEFAULT	STD/FINE/EX-FINE/PHOTO NORMAL/DARK/LIGHT	STD NOR	STD NOR	STD NOR	STD NOR	STD NOR	STD NOR	STD NOR	STD NOR	STD NOR	STD NOR	STD NOR	STD NOR	STD NOR	
10	T/F TIMER PRG.	20 sec/35 sec	35	35	20	35	20	35	35	35	35	20	20	20	20	
11	RING RESPONSE	1 ring/5 sec/10 sec/15 sec/20 sec	1 ring	1 ring	1 ring	1 ring	1 ring	1 ring	1 ring	1 ring	1 ring	1 ring	1ring	1 ring	1 ring	
12	DISTINCTIVE RING	OFF/ON/SET	OFF	OFF	OFF	OFF	OFF	OFF	OFF	OFF	OFF	OFF	OFF	OFF	OFF	
13	PAPER SIZE	1st Tray=A4/LET./LGL13/LGL14 /EXEC/A5/A6/JISB5	LET	LET	A4	A4	A4	A4	A4	A4	A4	A4	A4	A4	A4	
14	USER LANGUAGE	LNG1/LNG2	LNG1	LNG1	LNG1	LNG2	LNG2	LNG1	LNG1	LNG1	LNG1	LNG1	LNG1	LNG2	LNG2	
15	INCOMING RING	OFF/ON/DRC	ON	ON	ON	ON	ON	ON	ON	ON	ON	OFF	OFF	OFF	ON	
16	REMOTE RECEIVE	OFF/00/11/22/33/...../88/99/**/##	OFF	OFF	OFF	OFF	OFF	OFF	**	OFF	OFF	OFF	OFF	**	11	
17	MEM./FEED SWITCH	MEMORY/FEEDER	MEM.	MEM.	MEM.	MEM.	MEM.	MEM.	MEM.	MEM.	MEM.	MEM.	MEM.	MEM.	MEM.	
18	POWER SAVE MODE	ON/OFF	OFF	OFF	ON	ON	OFF	OFF	OFF	OFF	OFF	OFF	OFF	OFF	OFF	
19	ECM FUNCTION	ON/OFF	ON	ON	ON	ON	ON	ON	ON	ON	ON	ON	ON	ON	ON	
20	REMOTE DIAGNOSIS	ON/OFF	OFF	OFF	OFF	OFF	OFF	ON	ON	OFF	OFF	OFF	OFF	OFF	ON	
21	PC/FAX SWITCH	ON/OFF	ON	ON	OFF	ON	ON	OFF	OFF	OFF	OFF	OFF	OFF	OFF	OFF	
22	NO TONER MEM. RX	ON/OFF	OFF	OFF	ON	OFF	OFF	OFF	OFF	ON	OFF	OFF	OFF	OFF	ON	
23	MEM. FULL SAVE	ON/OFF	OFF	OFF	OFF	OFF	OFF	OFF	OFF	OFF	OFF	OFF	OFF	OFF	OFF	
24	CONTINIOUS TONE	ON/OFF	OFF	OFF	OFF	OFF	OFF	OFF	OFF	OFF	OFF	OFF	OFF	OFF	OFF	
25	INSTANT DIALING	ON/OFF	ON	ON	ON	ON	ON	ON	ON	ON	ON	ON	ON	ON	ON	
26	RESTRICT ACCESS	ON/OFF	OFF	OFF	OFF	OFF	OFF	OFF	OFF	OFF	OFF	OFF	OFF	OFF	OFF	
27	WIDTH REDUCTION	ON/OFF	OFF	OFF	OFF	OFF	OFF	OFF	OFF	OFF	OFF	OFF	OFF	OFF	OFF	
28	TONER SAVE	ON/OFF	OFF	OFF	OFF	OFF	OFF	OFF	OFF	OFF	OFF	OFF	OFF	OFF	OFF	
29	CNG COUNT	1-5	1	1	1	1	1	1	1	1	1	1	1	1	1	
30	ISDN DIAL MODE	G4 MODE/G3 MODE	G4	G4	G4	G4	G4	G4	G4	G4	G4	G4	G4	G4	G4	Only ISDN opt. Installed
31	SPEECH RECEIVE	ON/OFF	ON	ON	ON	ON	ON	ON	ON	ON	ON	ON	ON	ON	ON	Only ISDN opt. Installed

Table 1.9 (2/2) User Default Setting

No.	User Setting Items	Setting Selection	14 NOR	15 SUI	16 AUT	17 HOL	18 ITA	19 ESP	20 CHN	(21) Factory	Note
1	MCF (single-loc.)	ON/OFF	ON	OFF	OFF	OFF	OFF	OFF	OFF	OFF	
2	MCF (multi-loc.)	ON/OFF	ON	ON	ON	ON	ON	OFF	ON	OFF	
3	ERR.REPORT (MCF.)	ON/OFF	ON	ON	ON	ON	OFF	ON	ON	OFF	
4	IMAGE IN MCF.	ON/OFF	ON	ON	ON	ON	ON	ON	ON	ON	
5	SENDER ID	ON/OFF	ON	ON	ON	ON	ON	ON	ON	ON	
6	MONITOR VOLUME	OFF/LOW/HIGH	LOW	MID	MID	MID	HIGH	HIGH	MID	HIGH	
7	BUZZER VOLUME	LOW/MID/HIGH	LOW	MID	MID	MID	HIGH	HIGH	MID	HIGH	
8	CLOSED NETWORK	OFF/ T/R / RX	OFF	OFF	OFF	OFF	OFF	OFF	OFF	OFF	
9	TX MODE DEFAULT	STD/FINE/EX-FINE/PHOTO NORMAL/DARK/LIGHT	STD NOR	STD NOR	STD NOR	STD NOR	STD NOR	STD NOR	STD NOR	STD NOR	
10	T/F TIMER PRG.	20 sec/35 sec	35	35	35	20	35	20	35	35	
11	RING RESPONSE	1 ring/5 sec/10 sec/15 sec/20 sec	1ring	5sec	1ring	1ring	1ring	1ring	1 ring	1ring	
12	DISTINCTIVE RING	OFF/ON/SET	OFF	OFF	OFF	OFF	OFF	OFF	OFF	OFF	
13	PAPER SIZE	1st Tray=A4/LET./LGL13/LGL14 /EXEC/A5/A6/JISB5	A4	A4	A4	A4	A4	A4	A4	LET	
14	USER LANGUAGE	LNG1/LNG2	LNG2	LNG2	LNG2	LNG2	LNG2	LNG2	LNG1	LNG1	
15	INCOMING RING	OFF/ON/DRC	ON	ON	ON	OFF	ON	OFF	ON	ON	
16	REMOTE RECEIVE	OFF/00/11/22/33/...../88/99/**/##	OFF	OFF	OFF	OFF	OFF	OFF	OFF	OFF	
17	MEM./FEED SWITCH	MEMORY/FEEDER	MEM.	MEM.	MEM.	MEM.	MEM.	MEM.	MEM.	MEM.	
18	POWER SAVE MODE	ON/OFF	ON	ON	ON	OFF	ON	OFF	ON	OFF	
19	ECM FUNCTION	ON/OFF	ON	ON	ON	ON	ON	ON	ON	ON	
20	REMOTE DIAGNOSIS	ON/OFF	OFF	OFF	OFF	OFF	OFF	OFF	OFF	ON	
21	PC/FAX SWITCH	ON/OFF	OFF	ON	ON	ON	OFF	OFF	OFF	OFF	
22	NO TONER MEM. RX	ON/OFF	ON	OFF	OFF	OFF	ON	OFF	OFF	OFF	
23	MEM. FULL SAVE	ON/OFF	OFF	OFF	OFF	OFF	OFF	OFF	OFF	OFF	
24	CONTINIOUS TONE	ON/OFF	OFF	OFF	OFF	OFF	OFF	OFF	OFF	OFF	
25	INSTANT DIALING	ON/OFF	ON	ON	ON	ON	ON	ON	ON	ON	
26	RESTRICT ACCESS	ON/OFF	OFF	OFF	OFF	OFF	OFF	OFF	OFF	OFF	
27	WIDTH REDUCTION	ON/OFF	OFF	OFF	OFF	OFF	OFF	OFF	OFF	OFF	
28	TONER SAVE	ON/OFF	OFF	OFF	OFF	OFF	OFF	OFF	OFF	OFF	
29	CNG COUNT	1-5	1	1	1	1	1	1	1	1	
30	ISDN DIAL MODE	G4 MODE/G3 MODE	G4	G4	G4	G4	G4	G4	G4	G4	Only ISDN opt. Installed
31	SPEECH RECEIVE	ON/OFF	ON	ON	ON	ON	ON	ON	ON	ON	Only ISDN opt. Installed

Table 1.10 (1/2) Technical Default Setting

No.	Technical Setting Items	Setting Selection	1 ODA	2 LTA	3 E-INT	4 GER	5 E-FRE	6 0-AUS	7 0-NZL	8 0-SIN	9 0-HNG	10 L-AG	11 IRL	12 DEN	13 SWE	Note
1	SERVICE BIT	ON/OFF	OFF	OFF	OFF	OFF	OFF	OFF	OFF	OFF	OFF	OFF	OFF	OFF	OFF	
2	MONITOR CONT.	ON/OFF	OFF	OFF	OFF	OFF	OFF	OFF	OFF	OFF	OFF	OFF	OFF	OFF	OFF	
3	COUNTRY CODE	USA INT'L GBR IRL NOR SWE FIN DEN GER HUN TCH POL SUI AUT BEL HOL FRE POR ESP ITA GRE AUS NZL SIN HNG LTA MEX RUS	USA	LTA	GBR	GER	FRE	AUS	NZL	SIN	HNG	USA	IRL	DEN	SWE	
4	TIME/DATE PRINT	0: OFF/ 1: ONCE/2: ALL	OFF	OFF	OFF	ALL	OFF	OFF	ALL	ONCE	OFF	OFF	OFF	ONCE	ONCE	
5	TSI PRINT	ON/OFF	ON	ON	ON	ON	ON	ON	ON	ON	ON	ON	ON	ON	ON	
6	TAD MODE	0: OFF/ 1: TYPE1/2: TYPE2/3: TYPE3	TYP2	TYP2	OFF	TYP1	TYP1	OFF	TYP1	OFF	OFF	TYP2	OFF	TYP2	TYP2	
7	REAL TIME DIAL	0: OFF/ 1: TYPE1/2: TYPE2	TYP2	TYP2	TYP2	TYP2	TYP2	TYP2	TYP2	TYP2	TYP2	TYP2	TYP2	TYP2	TYP2	By PTT Parameter
8	TEL/FAX SW	ON/OFF	ON	ON	ON	ON	ON	ON	ON	ON	ON	ON	ON	ON	ON	
9	MDY/DMY	0: MDY/ 1: DMY	MDY	MDY	DMY	DMY	DMY	DMY	DMY	DMY	DMY	MDY	DMY	MDY	MDY	
10	LONG DOC. SCAN	ON/OFF	OFF	OFF	OFF	ON	ON	OFF	OFF	OFF	OFF	OFF	ON	OFF	OFF	
11	TONE FOR ECHO	ON/OFF	OFF	OFF	OFF	OFF	OFF	OFF	OFF	OFF	OFF	OFF	OFF	OFF	OFF	
12	MH ONLY	ON/OFF	OFF	OFF	OFF	OFF	OFF	OFF	OFF	OFF	OFF	OFF	OFF	OFF	OFF	
13	H/MODEM RATE	33.6K/28.8K/14.4K/9.6K/4.8K	33.6K	33.6K	33.6K	33.6K	33.6K	33.6K	33.6K	33.6K	33.6K	33.6K	33.6K	33.6K	33.6K	
14	T1(TX) TIMER VALUE	010 - 255 sec	59	59	60	60	140	30	40	60	30	59	60	60	60	By PTT Parameter
15	T1(RX) TIMER VALUE	010 - 255 sec	35	35	35	35	35	35	35	35	35	35	35	35	35	
16	T2 TIMER VALUE	001 - 255 (100ms - 25.5 sec)	130	130	130	60	51	130	130	130	130	130	130	130	130	Base Timer=100ms
17	DIS BIT 32	ON/OFF	ON	ON	ON	ON	ON	ON	ON	ON	ON	ON	ON	ON	ON	
18	ERR. CRITERION	0 - 99	10	10	10	10	10	10	10	10	10	10	10	10	10	
19	OFF HOOK BYPASS	ON/OFF	OFF	OFF	OFF	OFF	OFF	OFF	OFF	OFF	OFF	OFF	OFF	OFF	OFF	
20	NL EQULIZER	0km/ 1.8km/3.6km/7.2km	0km	0km	0km	0km	0km	0km	0km	0km	0km	0km	0km	0km	0km	
21	ATTENUATOR	0 - 15dB	10dB	10dB	11dB	9dB	10dB	11dB	11dB	11dB	11dB	10dB	11dB	11dB	11dB	FRE = 7 - 15DB, CHN=+2DB
22	T/F TONE ATT	0 - 15dB	10dB	10dB	9dB	7dB	11dB	9dB	9dB	9dB	9dB	10dB	9dB	10dB	9dB	CHN=+2DB
23	MF. ATT	0 - 15dB	3dB	8dB	6dB	8dB	4dB	5dB	6dB	5dB	8dB	3dB	5dB	8dB	8dB	CHN=+2DB
24	RING DURA. *10MS	10 - 99 (*10 ms)	12	12	14	14	60	12	14	14	14	12	14	12	14	
25	CML TIMING *100MS	1 - 19 (*100 ms)	3	3	3	3	15	3	12	12	12	3	3	3	1	
26	HEAD STROBE	00000 - 11111	10100	10100	10100	10100	10100	10100	10100	10100	10100	10100	10100	10100	10100	
27	MEDIA TYPE	M/MH/H	M	M	M	M	M	M	M	M	M	M	M	M	M	
28	TR LATCH CURRENT	-2/-1/0/+1/+2	0	0	0	0	0	0	0	0	0	0	0	0	0	
29	NSF SWITCH	ON/OFF	ON	ON	ON	ON	ON	ON	ON	ON	ON	ON	ON	ON	ON	
30	ID/TSI PRIORITY	ID/TSI	ID	ID	ID	TSI	ID	ID	ID	ID	ID	ID	ID	ID	ID	
31	TONER COUNT CLEAR	ON/OFF	OFF	OFF	OFF	OFF	OFF	OFF	OFF	OFF	OFF	OFF	OFF	OFF	OFF	
32	PARALLEL PICK UP	ON/OFF	ON	ON	ON	OFF	ON	ON	OFF	ON	ON	ON	ON	ON	ON	
33	V.34 TX RETRY	ON/OFF	ON	ON	ON	ON	ON	ON	ON	ON	ON	ON	ON	ON	ON	
34	SYMBOL RATE	2400/2800/3200/3429	3429	3429	3429	3429	3429	3429	3429	3429	3429	3429	3429	3429	3429	
35	LEASED LINE	ON/OFF	OFF	OFF	OFF	OFF	OFF	OFF	OFF	OFF	OFF	OFF	OFF	OFF	OFF	
36	CED SEND	ON/OFF	ON	ON	ON	ON	ON	ON	ON	ON	ON	ON	ON	ON	ON	
37	FAX2NET FUNCTION	ON/OFF	OFF	OFF	ON	ON	ON	OFF	OFF	OFF	OFF	OFF	OFF	ON	ON	
38	TOP FEED	-10mm-+10mm	0mm	0mm	0mm	0mm	0mm	0mm	0mm	0mm	0mm	0mm	0mm	0mm	0mm	
39	BOTTOM FEED	-10mm-+10mm	0mm	0mm	0mm	0mm	0mm	0mm	0mm	0mm	0mm	0mm	0mm	0mm	0mm	
40	G3/G4 LEARNING	ON/OFF	ON	ON	ON	ON	ON	ON	ON	ON	ON	ON	ON	ON	ON	Only ISDN opt. Installed
41	LLC CHECK	ON/OFF	OFF	OFF	OFF	OFF	OFF	OFF	OFF	OFF	OFF	OFF	OFF	OFF	OFF	Only ISDN opt. Installed
42	G3 SETUP BC	3.1K/SPEC	SPEC	SPEC	SPEC	SPEC	SPEC	SPEC	SPEC	SPEC	SPEC	SPEC	SPEC	SPEC	SPEC	Only ISDN opt. Installed
43	G3 FALLBACK CAUSE	select from all 50 kinds of service codes	It doesn't have default data with each default type. Only one kind has data as a device.													Only ISDN opt. Installed

E-XXX=OEL-XXX, O-XXX=OKI-XXX, L-XXX=LANIER-XXX

Note: As for the setting of the part of mesh, Default-data does'nt exist in the Default-file. This setting has the data which are characteristic of the device.

Table 1.10 (2/2) Technical Default Setting

No.	Technical Setting Items	Setting Selection	14 NOR	15 SUI	16 AUT	17 HOL	18 ITA	19 ESP	20 CHN	(21) Factory	Note
1	SERVICE BIT	ON/OFF	OFF	OFF	OFF	OFF	OFF	OFF	OFF	ON	
2	MONITOR CONT.	ON/OFF	OFF	OFF	OFF	OFF	OFF	OFF	OFF	ON	
3	COUNTRY CODE	USA INT'L GBR IRL NOR SWE FIN DEN GER HUN TCH POL SUI AUT BEL HOL FRE POR ESP ITA GRE AUS NZL SIN HNG LTA MEX RUS	NOR	SUI	AUT	HOL	ITA	ESP	CHN	INT'L	
4	TIME/DATE PRINT	0: OFF/ 1: ONCE/2: ALL	OFF	ALL	ALL	ONCE	ALL	ONCE	OFF	ONCE	
5	TSI PRINT	ON/OFF	ON	ON	ON	ON	ON	ON	ON	ON	
6	TAD MODE	0: OFF/ 1: TYPE1/2: TYPE2/3: TYPE3	OFF	TYP1	TYP1	TYP1	OFF	TYP2	TYP2	OFF	
7	REAL TIME DIAL	0: OFF/ 1: TYPE1/2: TYPE2	TYP2	TYP2	TYP2	TYP2	TYP2	TYP2	TYP2	TYP2	By PTT Parameter
8	TEL/FAX SW	ON/OFF	ON	ON	ON	ON	ON	ON	ON	ON	
9	MDY/DMY	0: MDY/ 1: DMY	DMY	MDY	DMY	DMY	DMY	DMY	DMY	DMY	
10	LONG DOC. SCAN	ON/OFF	OFF	ON	ON	OFF	OFF	OFF	OFF	OFF	
11	TONE FOR ECHO	ON/OFF	OFF	OFF	OFF	OFF	OFF	OFF	OFF	OFF	
12	MH ONLY	ON/OFF	OFF	OFF	OFF	OFF	OFF	OFF	OFF	OFF	
13	H/MODEM RATE	33.6K/28.8K/14.4K/9.6K/4.8K	33.6K	33.6K	33.6K	33.6K	33.6K	33.6K	33.6K	33.6K	
14	T1(TX) TIMER VALUE	010 - 255 sec	60	60	60	60	40	45	45	60	By PTT Parameter
15	T1(RX) TIMER VALUE	010 - 255 sec	35	35	35	35	35	35	35	35	
16	T2 TIMER VALUE	001 - 255 (100ms - 25.5 sec)	130	60	60	130	130	51	130	130	Base Timer=100ms
17	DIS BIT 32	ON/OFF	ON	ON	ON	ON	ON	ON	ON	ON	
18	ERR. CRITERION	0 - 99	10	10	10	10	10	10	10	10	
19	OFF HOOK BYPASS	ON/OFF	OFF	OFF	OFF	OFF	OFF	OFF	OFF	OFF	
20	NL EQULIZER	0km/ 1.8km/3.6km/7.2km	0Km	0km	0km	0km	0km	0km	0km	0km	
21	ATTENUATOR	0 - 15dB	11dB	9dB	9dB	11dB	8dB	11dB	9dB	10dB	FRE = 7 - 15DB, CHN=+2DB
22	T/F TONE ATT	0 - 15dB	9dB	7dB	7dB	10dB	12dB	10dB	8dB	10dB	CHN=+2DB
23	MF. ATT	0 - 15dB	8dB	1dB	4dB	8dB	4dB	5dB	4dB	8dB	CHN=+2DB
24	RING DURA. *10MS	10 - 99 (*10 ms)	14	14	11	14	14	14	12	12	
25	CML TIMING *100MS	1 - 19 (*100 ms)	3	3	3	11	3	3	3	3	
26	HEAD STROBE	00000 - 11111	10100	10100	10100	10100	10100	10100	10100	10100	
27	MEDIA TYPE	M/MH/H	M	M	M	M	M	M	M	M	
28	TR LATCH CURRENT	-2/-1/0/+1/+2	0	0	0	0	0	0	0	0	
29	NSF SWITCH	ON/OFF	ON	ON	ON	ON	ON	ON	ON	ON	
30	ID/TSI PRIORITY	ID/TSI	ID	TSI	TSI	ID	ID	ID	ID	ID	
31	TONER COUNT CLEAR	ON/OFF	OFF	OFF	OFF	OFF	OFF	OFF	OFF	OFF	
32	PARALLEL PICK UP	ON/OFF	ON	OFF	OFF	OFF	ON	OFF	OFF	ON	
33	V.34 TX RETRY	ON/OFF	ON	ON	ON	ON	ON	ON	ON	ON	
34	SYMBOL RATE	2400/2800/3200/3429	3429	3429	3429	3429	3429	3429	3429	3429	
35	LEASED LINE	ON/OFF	OFF	OFF	OFF	OFF	OFF	OFF	OFF	OFF	
36	CED SEND	ON/OFF	ON	ON	ON	ON	ON	ON	ON	ON	
37	FAX2NET FUNCTION	ON/OFF	ON	OFF	OFF0mm	ON	ON	OFF	OFF	OFF	
38	TOP FEED	-10mm-+10mm	0mm	0mm	0mm	0mm	0mm	0mm	0mm	0mm	
39	BOTTOM FEED	-10mm-+10mm	0mm	0mm	ON	0mm	0mm	0mm	0mm	0mm	
40	G3/G4 LEARNING	ON/OFF	ON	ON	OFF	ON	ON	ON	ON	ON	Only ISDN opt. Installed
41	LLC CHECK	ON/OFF	OFF	OFF	3.1K	OFF	OFF	OFF	OFF	OFF	Only ISDN opt. Installed
42	G3 SETUP BC	3.1K/SPEC	SPEC	SPEC	SPEC	SPEC	SPEC	SPEC	SPEC	SPEC	Only ISDN opt. Installed
43	G3 FALLBACK CAUSE	select from all 50 kinds of service codes	It doesn't have default data with each default type. Only one kind has data as a device.								Only ISDN opt. Installed

E-XXX=OEL-XXX, O-XXX=OKI-XXX, L-XXX=LANIER-XXX

Note: As for the setting of the part of mesh, Default-data does'nt exist in the Default-file. This setting has the data which are characteristic of the device.

Table 1.11 Default Setting of Dial Parameters

No.	User Setting Items	Setting Selection	COUNTRY CODE																													
			1 USA	2 INT'L	3 GBR	4 IRL	5 NOR	6 SWE	7 FIN	8 DEN	9 GER	10 HUN	11 TCH	12 POL	13 SUI	14 AUT	15 BEL	16 HOL	17 FRE	18 POR	19 ESP	20 ITA	21 GRE	22 AUS	23 NZL	24 SIN	25 HNG	26 LTA	27 MEX	28 CHN	29 RUS
1	REDIAL TRIES	0 - 10 TRIES	1	3	2	2	5	10	3	5	10	10	2	2	10	10	3	2	2	2	2	2	2	2	2	5	2	3	3	3	3
2	REDIAL INTERVAL	1 - 6 min	3	3	3	3	2	3	3	3	1	1	3	3	1	1	3	3	6	3	3	3	3	3	3	3	3	3	3	3	3
3	DIAL TONE DETECT	ON/OFF	OFF	ON	OFF	OFF	OFF	OFF	OFF	OFF	OFF	ON	ON	ON	OFF	OFF	OFF	OFF	OFF	OFF	OFF	OFF	OFF	ON	ON	ON	ON	OFF	OFF	OFF	ON
4	BUSY TONE DETECT	ON/OFF	ON	ON	ON	OFF	ON	ON	ON	ON	ON	OFF	ON	ON	ON	ON	ON	ON	ON	ON	ON	ON	ON	ON	ON	ON	ON	ON	ON	ON	ON
5	MF (TONE)/DP (PULSE)	DP/MF	MF	MF	MF	MF	MF	MF	MF	MF	DP	DP	MF	DP	MF	DP	MF	MF	MF	DP	MF	MF	MF	MF	MF	MF	MF	MF	MF	MF	MF
6	PULSE DIAL RATE	10 PPS/16 PPS/ 20 PPS	10	10	10	10	10	10	10	10	10	10	10	10	10	10	10	10	10	10	10	10	10	10	10	10	10	10	10	10	10
7	PULSE MAKE RATIO	33%/39%/40%	39%	33%	33%	33%	33%	39%	39%	39%	40%	33%	39%	33%	40%	40%	33%	39%	33%	33%	33%	39%	39%	33%	33%	33%	33%	39%	39%	33%	33%
8	PULSE DIAL TYPE	N/10-N/N+1	N	N	N	N	N	N+1	N	N	N	N	N	N	N	N	N	N	N	N	N	N	N	N	10-N	N	N	N	N	N	N
9	MF (TONE) DURATION	75 ms/85 ms/100 ms	100	85	85	85	75	85	85	100	85	100	100	100	85	85	85	100	75	85	85	85	100	85	85	85	85	100	100	85	85
10	PBX LINE	ON/OFF	OFF	OFF	OFF	OFF	OFF	OFF	OFF	OFF	OFF	OFF	OFF	OFF	OFF	OFF	OFF	OFF	OFF	OFF	OFF	OFF	OFF	OFF	OFF	OFF	OFF	OFF	OFF	OFF	OFF
11	FLASH/EARTH/NORMAL	NORMAL/FLASH/ EARTH	N	N	N	N	N	N	N	N	EARTH	N	N	N	FLASH	EARTH	N	N	FLASH	N	N	N	N	N	N	N	N	N	N	N	N
12	AUTO START	ON/OFF	ON	OFF	OFF	OFF	ON	ON	ON	ON	ON	ON	OFF	OFF	ON	ON	OFF	OFF	OFF	ON	ON	ON	OFF	ON	ON	ON	ON	ON	ON	ON	OFF
13	DIAL PREFIX	OFF/(max. 4 digits)	OFF	OFF	OFF	OFF	OFF	OFF	OFF	OFF	0...	OFF	OFF	OFF	0...	0...	OFF	OFF	OFF	OFF	OFF	OFF	OFF	OFF	OFF	OFF	OFF	OFF	OFF	OFF	OFF
XPARAD [0]			f8	c8	00	08	c0	c0	c8	08	d8	c8	c8	c8	d8	d8	48	c0	18	08	08	c8	08	08	08	08	08	f8	f8	f8	c8
XPARAD [1]			58	58	58	58	78	58	58	58	78	58	58	58	78	78	58	58	78	58	58	78	18	18	18	18	18	58	58	58	58

Note: User settings are possible for items without mesh.

Model. Description ID for Plug & Play

No.	Close Setting Items	Setting Selection	1 ODA	2 ATT	3 E-INT	4 GER	5 E-FRE	6 0-AUS	7 0-NZL	8 0-SIN	9 0-HNG	10 L-AG	11 IRL	12 DEN	13 SWE	Note
1	Plug & Play ID Default	00/01/02/03/04	00	00	01	01	01	04	04	04	04	02	01	01	01	
			14 NOR	15 SUI	16 AUT	17 HOL	18 ITA	19 ESP	20 CHN	(21) Factory						
			01	01	01	01	01	01	01	00						

00 - ODA, 01 - OEL, 02 - Lanier, 03 - Telenolma, 04 - OKI

Table 1.12 Plug & Play ID

Table 1.13 (1/2) XPARA Bit

No.	User Setting Item	XPARA[ ]	1 USA	2 INT	3 GBR	4 IRL	5 NOR	6 SWE	7 FIN	8 DEN	9 GER	10 HUN	11 TCH	12 POL	13 SUI	14 AUT	15 BEL	16 HOL	17 FRA	18 POR	19 ESP	20 ITA	21 GRE	22 AUS	23 NZL	24 SIN	25 HNG	26 LTA	27 MEX	28 CHN	29 RUS
1	MCF (single-loc.)	0	1	1	1	1	1	1	1	1	1	1	1	1	1	1	1	1	1	1	1	1	1	1	1	1	1	1	1	1	1
2	MCF (multi-loc.)		1	1	1	1	1	1	1	1	1	1	1	1	1	1	1	1	1	1	1	1	1	1	1	1	1	1	1	1	1
3	ERR. REPORT (MCF.)		1	1	1	1	1	1	1	1	0	1	1	1	1	1	1	1	1	1	1	1	1	1	1	1	1	1	1	1	1
4	IMAGE IN MCF.		1	1	1	1	1	1	1	1	1	1	1	1	1	1	1	1	1	1	1	1	1	1	1	1	1	1	1	1	1
5	SENDER ID		1	1	1	1	1	1	1	1	1	1	1	1	1	1	1	1	1	1	1	1	1	1	1	1	1	1	1	1	1
6	MONITOR VOLUME		1	1	1	1	1	1	1	1	1	1	1	1	1	1	1	1	1	1	1	1	1	1	1	1	1	1	1	1	1
7	BUZZER VOLUME		1	1	1	1	1	1	1	1	1	1	1	1	1	1	1	1	1	1	1	1	1	1	1	1	1	1	1	1	1
8	CLOSED NETWORK		1	1	1	1	1	1	1	1	1	1	1	1	1	1	1	1	1	1	1	1	1	1	1	1	1	1	1	1	1
9	TX MODE DEFAULT	1	1	1	1	1	1	1	1	1	1	1	1	1	1	1	1	1	1	1	1	1	1	1	1	1	1	1	1	1	1
10	T/F TIMER PRG.		1	1	1	1	1	1	1	1	1	1	1	1	1	1	1	1	1	1	1	1	1	1	1	1	1	1	1	1	1
11	RING RESPONSE		1	1	1	1	1	1	1	1	1	1	1	1	0	0	0	1	0	1	1	1	1	0	0	0	0	1	1	1	1
12	DISTINCTIVE RING		1	0	0	0	0	0	0	1	1	0	0	0	1	1	0	0	0	1	0	0	0	1	1	1	1	1	1	0	0
13	1'ST PAPER SIZE		1	1	1	1	1	1	1	1	1	1	1	1	1	1	1	1	1	1	1	1	1	1	1	1	1	1	1	1	1
14	USER LANGUAGE		1	1	1	1	1	1	1	1	1	1	1	1	1	1	1	1	1	1	1	1	1	1	1	1	1	1	1	1	1
15	INCOMING RING		1	1	1	1	1	1	1	1	1	1	1	1	1	1	1	1	1	1	1	1	1	1	1	1	1	1	1	1	1
16	REMOTE RECEIVE		1	1	1	1	1	1	1	1	1	1	1	1	1	1	1	1	1	1	1	1	1	1	1	1	1	1	1	1	1
17	MEM./FEED SWITCH	2	1	1	1	1	1	1	1	1	1	1	1	1	1	1	1	1	1	1	1	1	1	1	1	1	1	1	1	1	1
18	POWER SAVE MODE		1	1	1	1	1	1	1	1	1	1	1	1	1	1	1	1	1	1	1	1	1	1	1	1	1	0	0	1	1
19	ECM FUNCTION		1	1	1	1	1	1	1	1	1	1	1	1	1	1	1	1	1	1	1	1	1	1	1	1	1	1	1	1	1
20	REMOTE DIAGNOSIS		1	1	1	1	1	1	1	1	1	1	1	1	1	1	1	1	1	1	1	1	1	1	1	1	1	1	1	1	1
21	PC/FAX SWITCH		1	1	1	1	1	1	1	1	1	1	1	1	1	1	1	1	1	1	1	1	1	1	1	1	1	1	1	1	1
22	NOT TONER MEM. RX		1	1	1	1	1	1	1	1	1	1	1	1	1	1	1	1	1	1	1	1	1	1	1	1	1	1	1	1	1
23	MEM. FULL SAVE		1	1	1	1	1	1	1	1	1	1	1	1	1	1	1	1	1	1	1	1	1	1	1	1	1	1	1	1	1
24	CONTINIOUS TONE		1	1	1	1	1	1	1	1	1	1	1	1	1	1	1	1	1	1	1	1	1	1	1	1	1	1	1	1	1
25	INSTANT DIAL	3	1	1	1	1	1	1	1	1	1	1	1	1	1	1	1	1	1	1	1	1	1	1	1	1	1	1	1	1	1
26	RESTRICT ACCESS		1	1	1	1	1	1	1	1	1	1	1	1	1	1	1	1	1	1	1	1	1	1	1	1	1	1	1	1	1
27	WIDTH REDUCTION		1	1	1	1	1	1	1	1	1	1	1	1	1	1	1	1	1	1	1	1	1	1	1	1	1	1	1	1	1
28	TONER SAVE		1	1	1	1	1	1	1	1	1	1	1	1	1	1	1	1	1	1	1	1	1	1	1	1	1	1	1	1	1
29	CNG COUNT		1	1	1	1	1	1	1	1	1	1	1	1	1	1	1	1	1	1	1	1	1	1	1	1	1	1	1	1	1
30	ISDN DIAL MODE		1	1	1	1	1	1	1	1	1	1	1	1	1	1	1	1	1	1	1	1	1	1	1	1	1	1	1	1	1
31	SPEECH RECEIVE		1	1	1	1	1	1	1	1	1	1	1	1	1	1	1	1	1	1	1	1	1	1	1	1	1	1	1	1	1
XPARA [0]			ff	ff	ff	ff	ff	ff	ff	ff	df	ff	ff	ff	ff	ff	ff	ff	ff	ff	ff	ff	ff	ff	ff	ff	ff	ff	ff	ff
XPARA [1]			ff	ef	ef	ef	ef	ef	ef	ff	ff	ef	ef	ef	df	df	cf	ef	cf	ff	ef	ef	ef	df	df	df	df	ff	ff	ef	ef
XPARA [2]			ff	ff	ff	ff	ff	ff	ff	ff	ff	ff	ff	ff	ff	ff	ff	ff	ff	ff	ff	ff	ff	ff	ff	ff	ff	bf	bf	ff	ff
XPARA [3]			ff	ff	ff	ff	ff	ff	ff	ff	ff	ff	ff	ff	ff	ff	ff	ff	ff	ff	ff	ff	ff	ff	ff	ff	ff	ff	ff	ff	ff
XPARA [4]			ff	ff	ff	ff	ff	ff	ff	ff	ff	ff	ff	ff	ff	ff	ff	ff	ff	ff	ff	ff	ff	ff	ff	ff	ff	ff	ff	ff	ff

Table 1.13 (2/2) XPARA Bit

No.	User Setting Item	XPARA[ ]	1 USA	2 INT	3 GBR	4 IRL	5 NOR	6 SWE	7 FIN	8 DEN	9 GER	10 HUN	11 TCH	12 POL	13 SUI	14 AUT	15 BEL	16 HOL	17 FRA	18 POR	19 ESP	20 ITA	21 GRE	22 AUS	23 NZL	24 SIN	25 HNG	26 LTA	27 MEX	28 CHN	29 RUS
	SPECIAL SETTINGS																														
b7	CLOCK ADJUSTMENT		1	1	1	1	1	1	1	1	1	1	1	1	1	1	1	1	1	1	1	1	1	1	1	1	1	1	1	1	1
b6	TSI/CSI		1	1	1	1	1	1	1	1	1	1	1	1	1	1	1	1	1	1	1	1	1	1	1	1	1	1	1	1	1
b5	SENDER ID		1	1	1	1	1	1	1	1	1	1	1	1	1	1	1	1	1	1	1	1	1	1	1	1	1	1	1	1	1
b4	FORWARDING TEL No.		1	1	1	1	1	1	1	1	1	1	1	1	1	1	1	1	1	1	1	1	1	1	1	1	1	1	1	1	1
b3	not assign		0	0	0	0	0	0	0	0	0	0	0	0	0	0	0	0	0	0	0	0	0	0	0	0	0	0	0	0	0
b2	not assign		0	0	0	0	0	0	0	0	0	0	0	0	0	0	0	0	0	0	0	0	0	0	0	0	0	0	0	0	0
b1	for TBR21 (DT detect mask	*2	0	0	1	1	1	1	1	1	1	0	0	0	1	1	1	1	1	1	1	1	1	0	0	0	0	0	0	0	0
b0	LANIER Special Settings	*1	0	0	0	0	0	0	0	0	0	0	0	0	0	0	0	0	0	0	0	0	0	0	0	0	0	0	0	0	0
XPARAE			f0	f0	f2	f2	f2	f2	f2	f2	f2	f0	f0	f0	f2	f2	f2	f2	f2	f2	f2	f2	f2	f0	f0	f0	f0	f0	f0	f0	f0

*1: LANIER Special Settings ("0": User setting are possible. "1": User setting are impossible.)

- CLOCK ADJUSTMENT
- TSI/CSI
- TIME/DATE PRINT
- TSI PRINT
- SYSTEM RESET (ALL DATA, CONFIG. DATA, LOCATION DATA)

*2: for TBR21 - DT detect mask - ("0": Normal operation "1": Both User and Serviceman should make operation impossible)

2. INSTALLATION PROCEDURE

2.1 Setup Information

2.1.1 General

The following flowchart outlines the installation procedure.

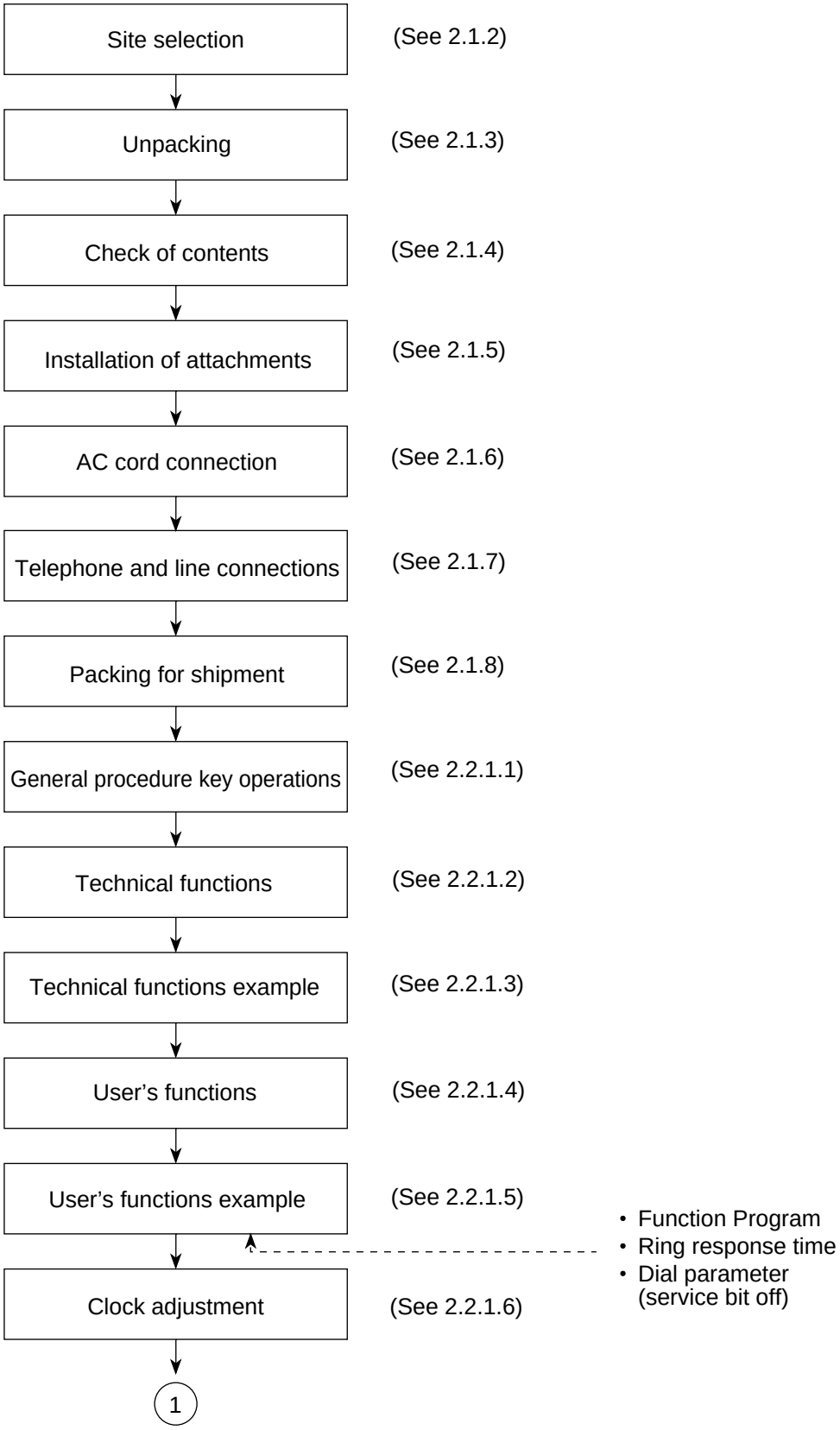

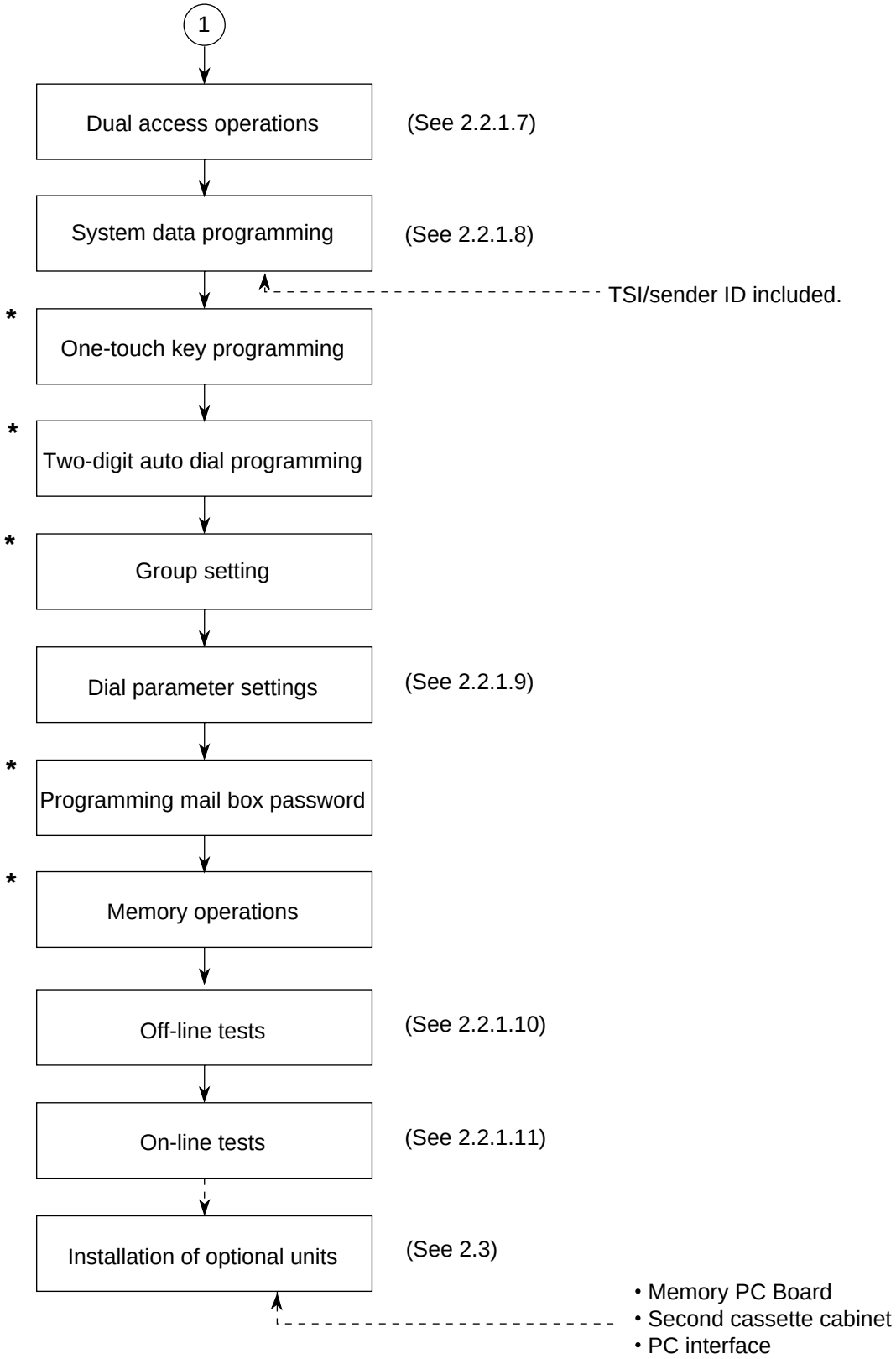

* : See user's guide

2.1.2 Site Selection

INSTALLATION

Precautions for Installation

(1) Fluctuation in line voltage
- 120VAC (102V to 127V)
- 230VAC (198V to 264V)

(2) Room temperature
50 to 90°F (10 to 32°C)

(3) Humidity
20 to 80% RH

(4) Operating environment
Pressure: Equivalent to altitude of 2500 m (8020 feet) and below.

(5) Exposure
Within five minutes at luminous intensity 2,000 lux (with the stacker cover opened).

(6) Required space for installation
The facsimile requires the space as shown below for safety and good operability.

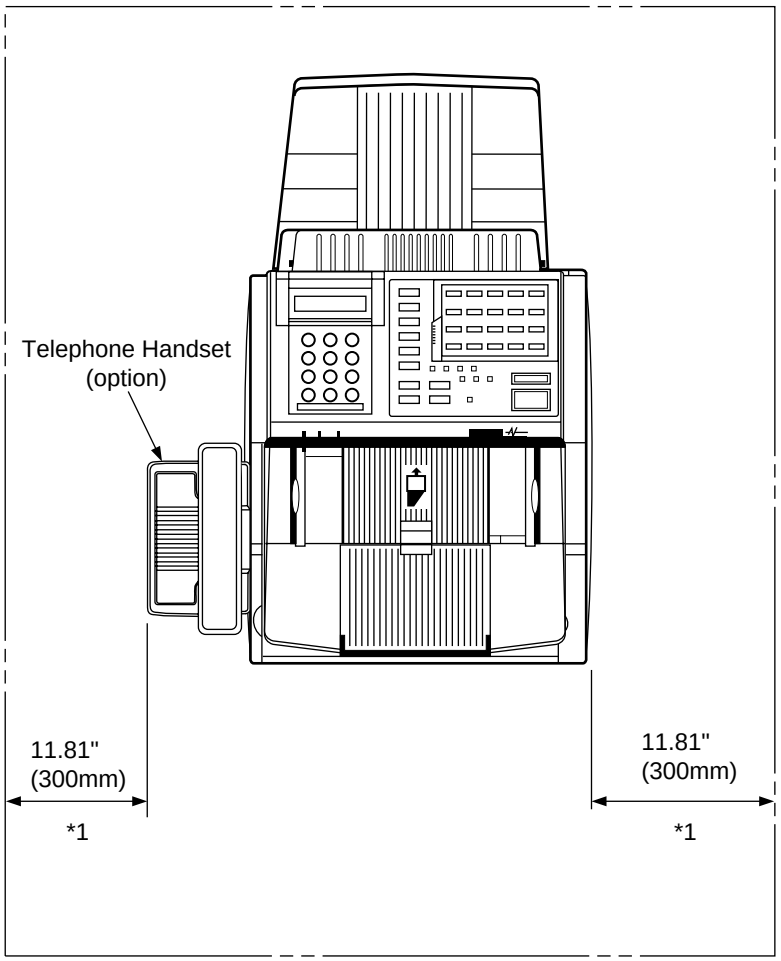

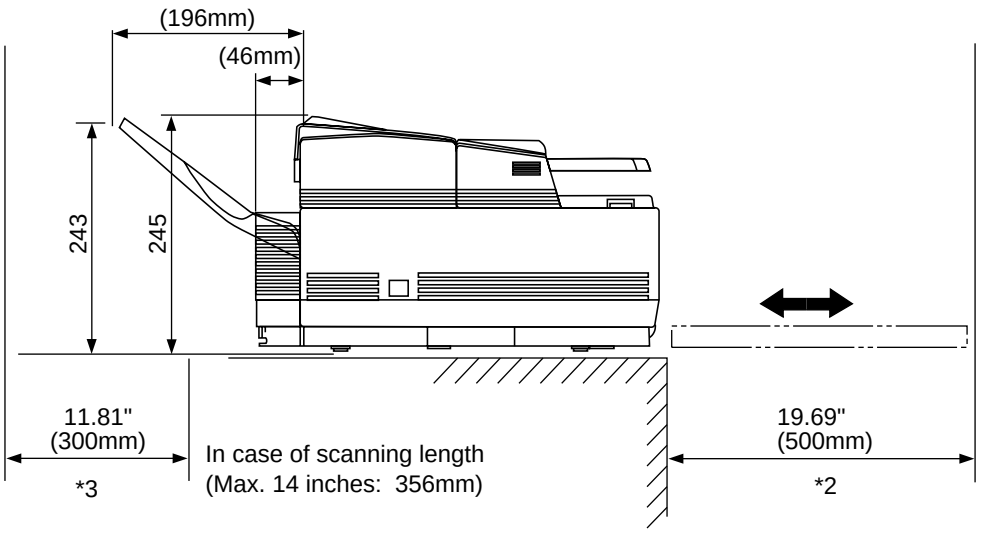

Note 1: This space is necessary for handling the handset. (option) (page 2-3)
2: This space is necessary for removing the recording paper cassette.
3: This space is necessary for installing the document stacker and to allow space for the fan exhaust.

(7) Levelness of installation surface
1 degree max.

(8) Other requirements
Avoid installing in any of the following places:
- A place exposed to direct sunlight
- A place near a heat source or exposed to vibration
- A dusty place
- A place in the atmosphere of acid gas, or steam etc.,
- A place exposed to quick temperature changes

2.1.3 Unpacking

2.1.3.1 Unpacking

Procedure

(1) Remove tape on the top of the carton box and open its cover.

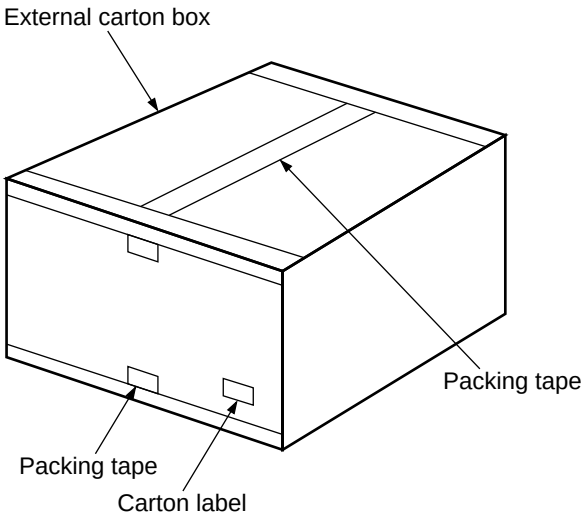

Figure 2.1 (1/3) Unpacking Procedure

(2) Take out the accessory box from the carton box.
(See Figure 2.1)

(3) Take out the machine with plastic wrapper from the box.

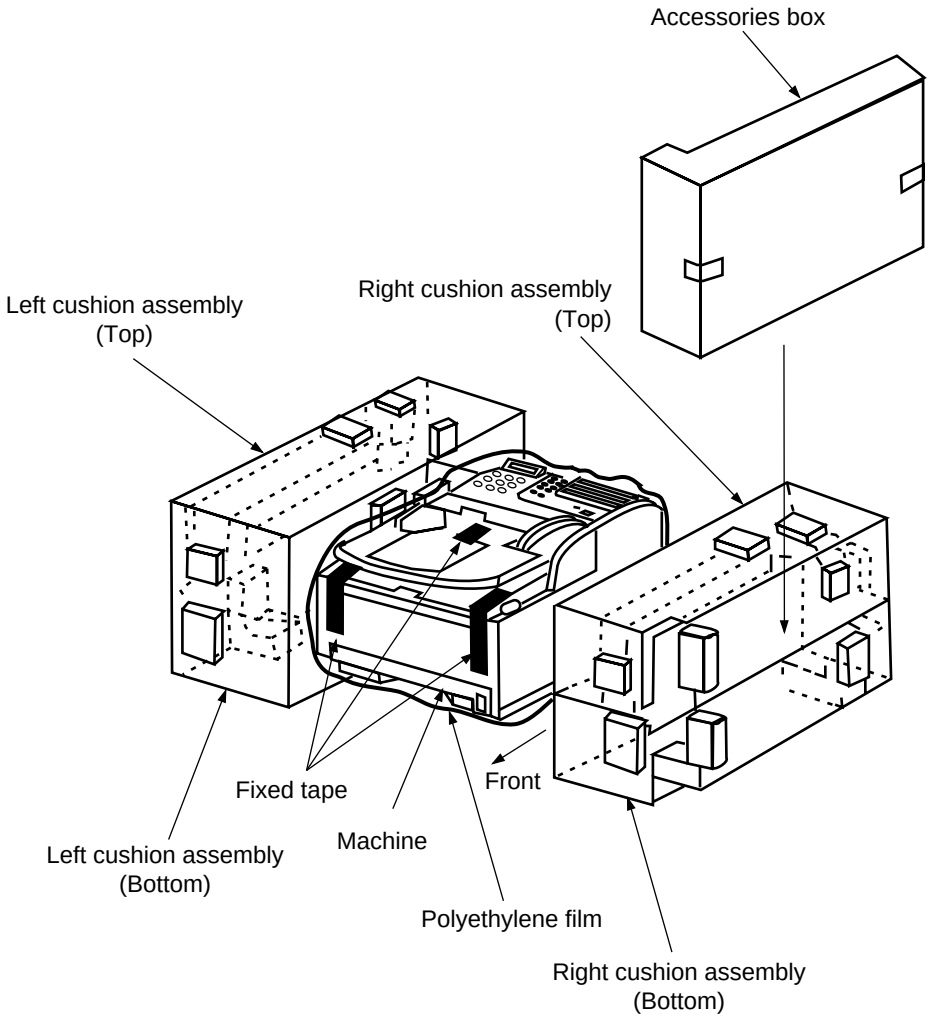

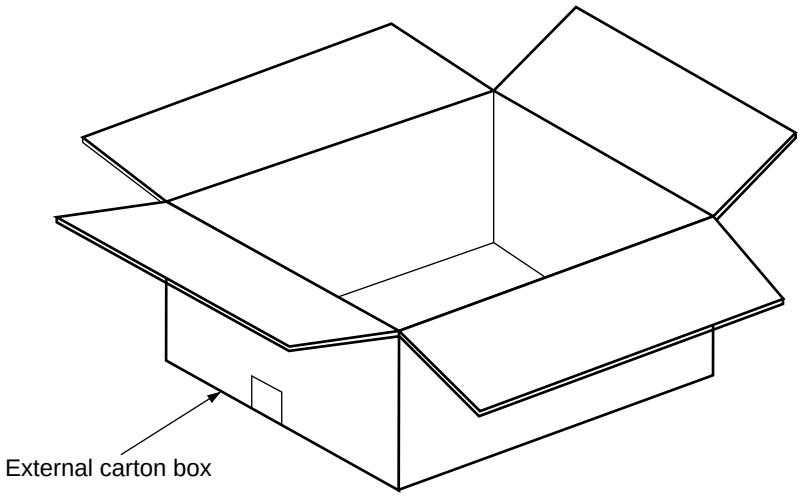

Figure 2.1 (2/3) Unpacking Procedure

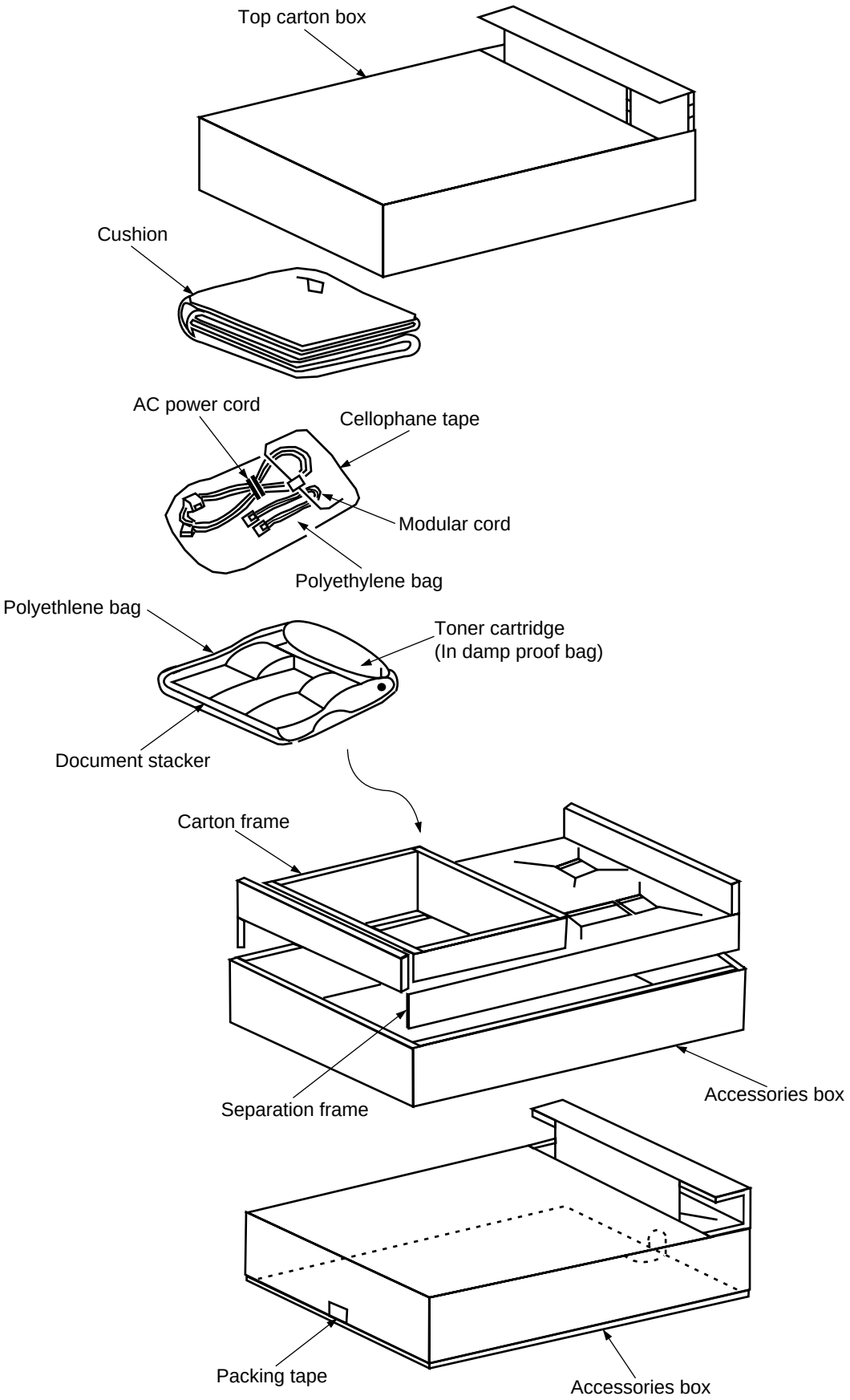

Figure 2.1 (3/3) Unpacking Procedure

2.1.4 Identification Contents

After having taken out the machine and accompanied accessories from the carton box, check the contents according to the following list:

Table 2.1 Contents List

Item No.	Name	Q'ty	Remarks
1	OKIFAX 5650 facsimile	1	
2	AC power cord	1	
3	I/D unit	1	Already installed.
4	Toner cartridge	1	
5	Document stacker	1	
6	Line cord	1	
7	One touch sheet	1	Already installed.
8	User's guide	1 vol.	

2.1.5 Installation of Attachments

2.1.5.1 Installation of Attachments

(1) Items
- Image Drum (ID) Unit (already installed)
- Toner cartridge
- Recording paper
- Document stacker

(2) Procedure

1) Toner cartridge
- Peel off the fixed tape attached to the copy stacker.
- Open the document table and copy stacker.

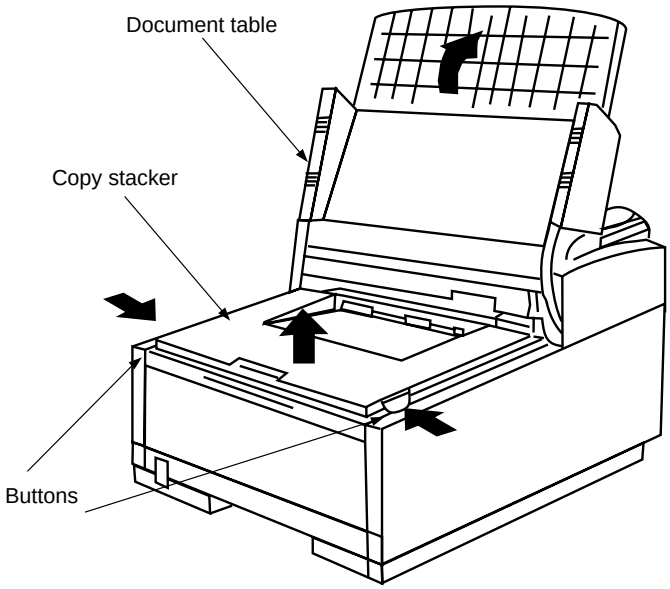

Figure 2.2 (1/5) Toner Cartridge Installation

- Take the cushion out of the ID unit.

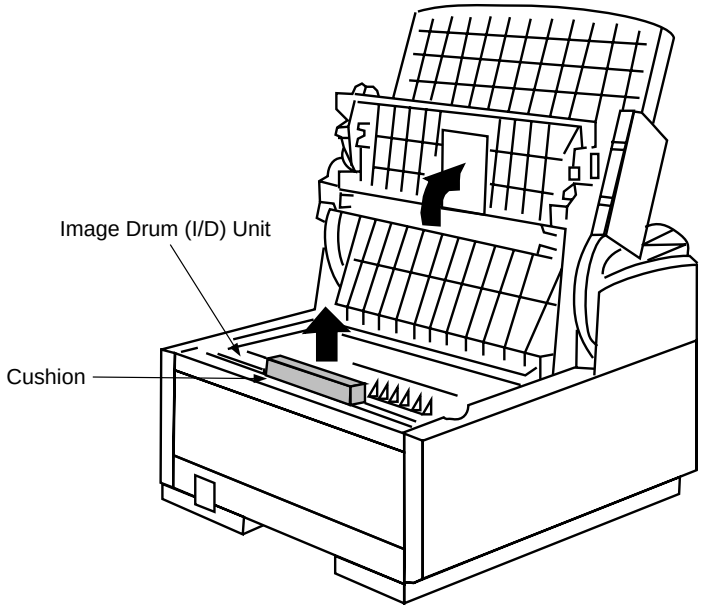

Figure 2.2 (2/5) Toner Cartridge Installation

• Take out the toner cartridge from the damp proof bag, shake it five or six times as shown in the illustration to eliminate the toner deflection, and peel off the seal gently.

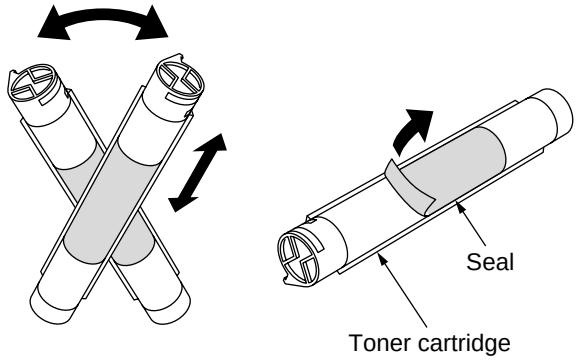

Figure 2.2 (3/5) Toner Cartridge Installation

• Ensure that the plastic tab on the right-hand side of the toner cartridge recess lines up with the groove on the toner cartridge.
• Press down on both ends to make sure the cartridge is fully seated.

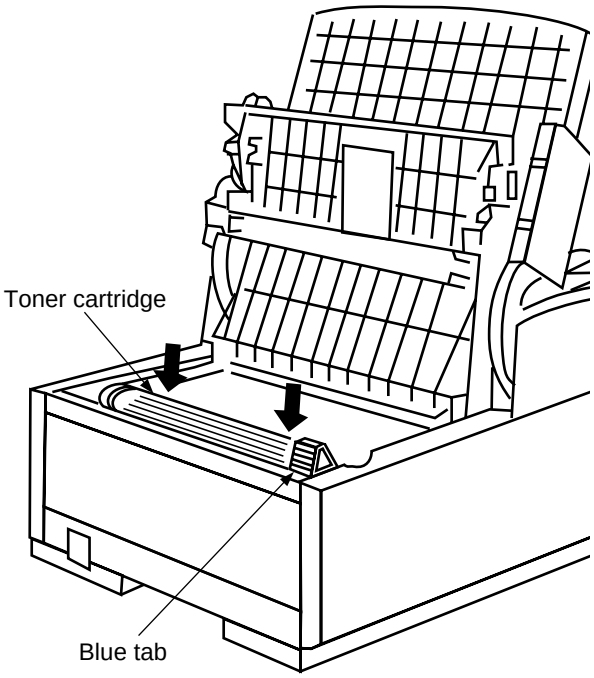

Figure 2.2 (4/5) Toner Cartridge Installation

• Push the blue tab forward until it stops.

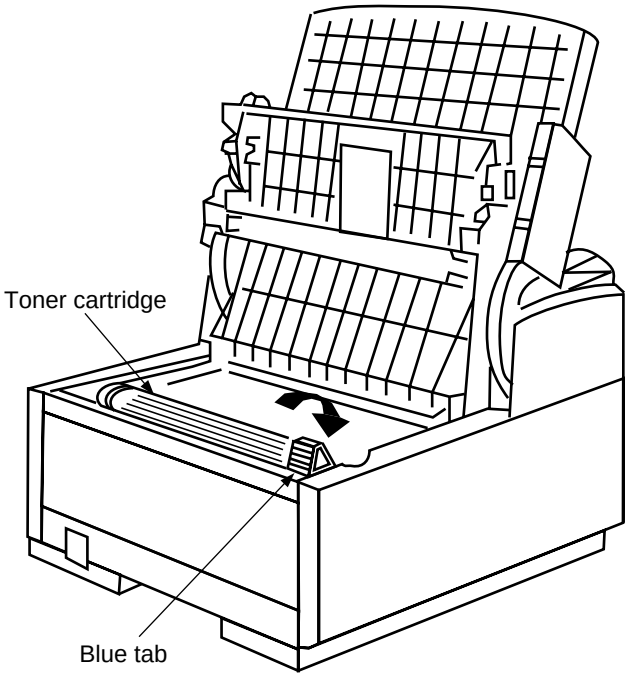

Figure 2.2 (5/5) Toner Cartridge Installation

• Clean the toner scattered in the vicinity of the toner cartridge using a cloth moistened with cold water. Do not use hot water since it makes the toner stick there.
• Close the copy stacker until the buttons have been locked completely.

(3) Recording paper

Note: About 250 sheets of the new paper can be set in the recording paper cassette.

• Remove the paper cassette from the facsimile by pulling the cassette tab.

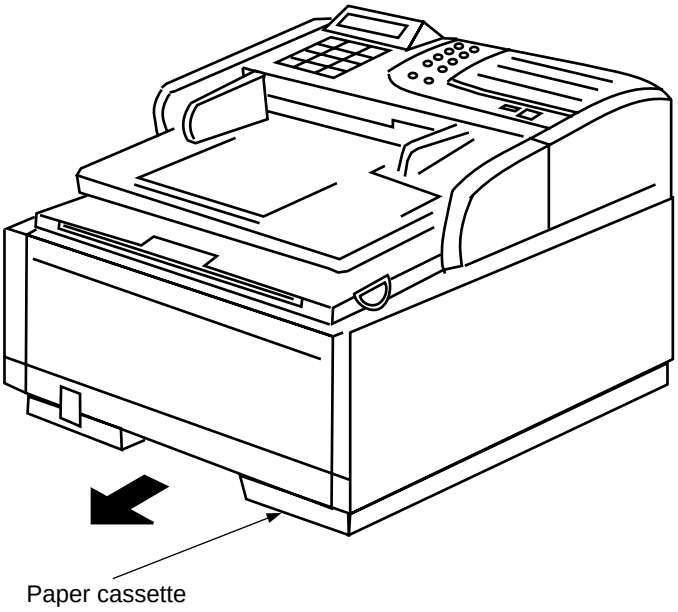

Figure 2.3 (1/2) Recording Paper Cassette Installation

• Sheets must not exceed the paper full marker of the new paper limit indication. If excessive sheets are set, it will cause paper jams.
• After loading the new paper, push it forward into the slot at the front of the facsimile until it locks.

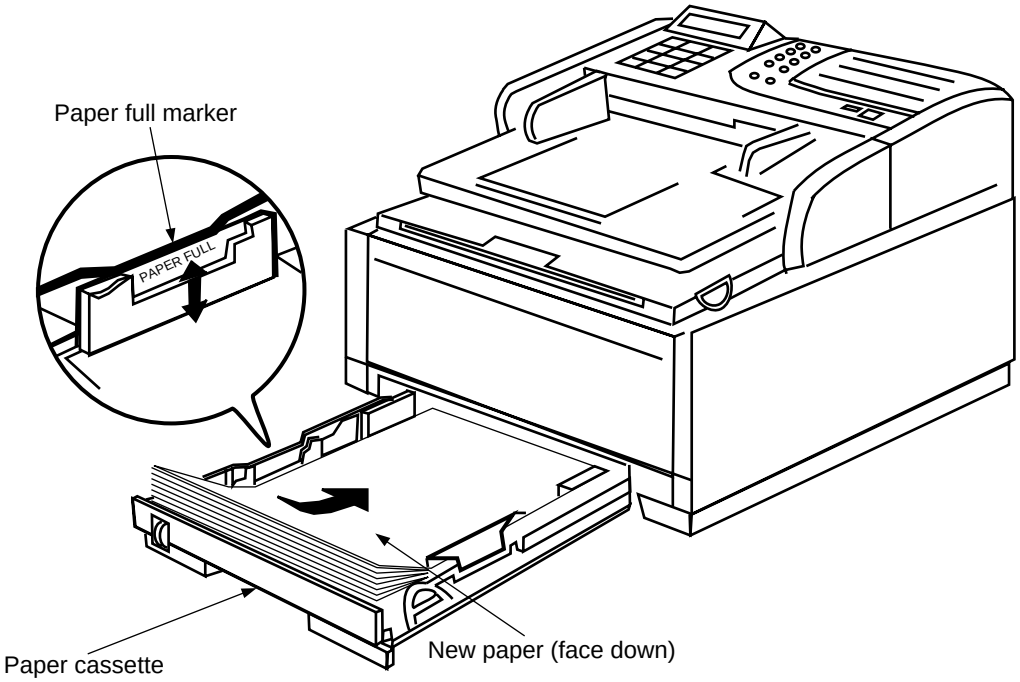

Figure 2.3 (2/2) Recording Paper Cassette Installation

(4) Document stacker

• Hang the document stacker onto hanging position.

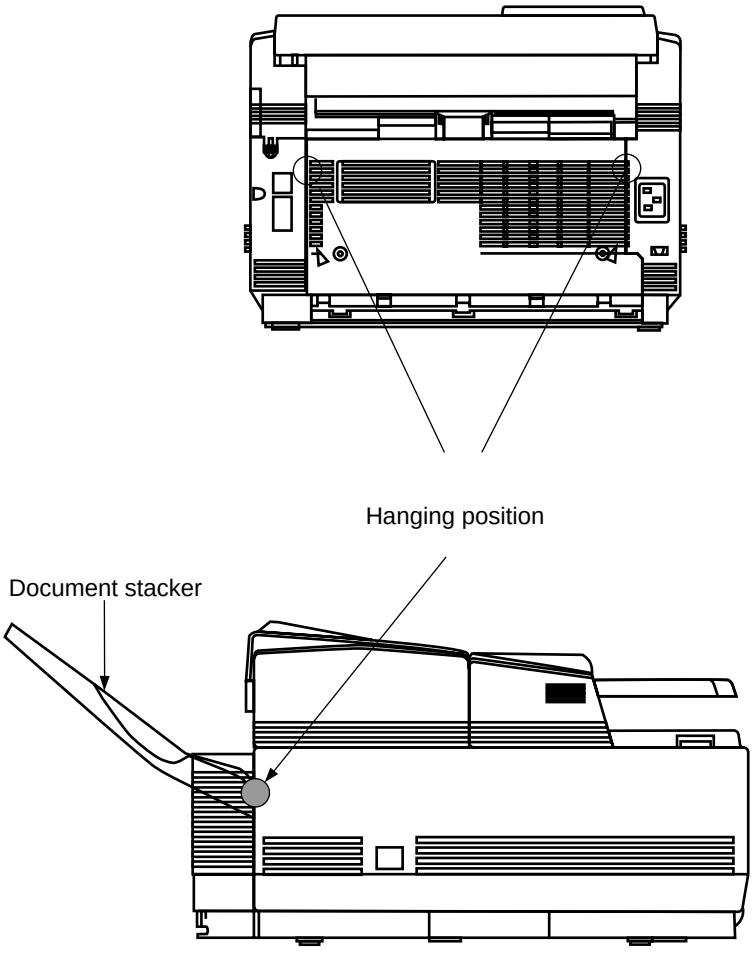

Figure 2.4 Document Stacker Installation

2.1.6 AC Cord Connection

The power supply is provided as follows.

Nominal input voltage 120VAC (Voltage range 102 to 127VAC)
Nominal input voltage 230VAC (Voltage range 198 to 250VAC)

Check whether the AC voltage of your input is within the above-mentioned voltage range and if so, check that the power switch is turned OFF. After turning off the power switch, connect the female plug of the AC cord to the machine and insert the male plug of the AC cord to the inlet receptacle.
Turn the power switch ON and check that the display shows “(Time)” message indicating the standby mode.

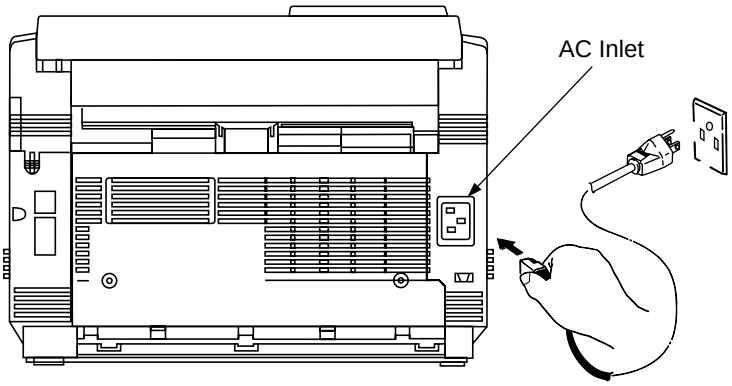

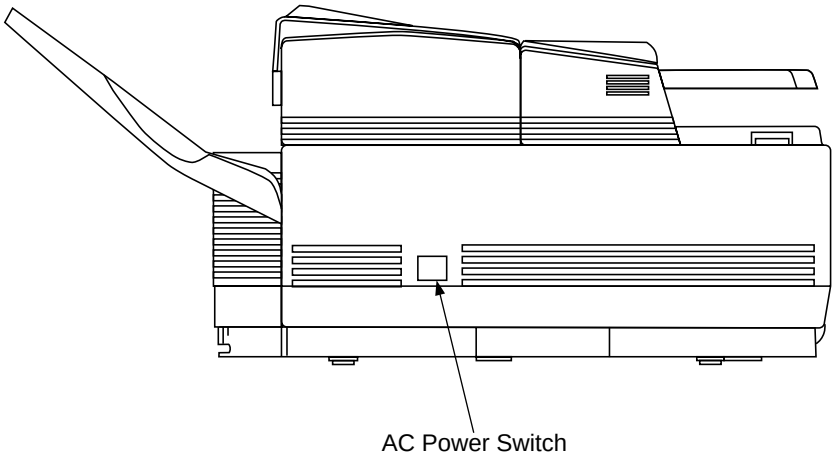

2.1.7 Telephone and Line Connections

(1) Procedure

• Connect the lines.

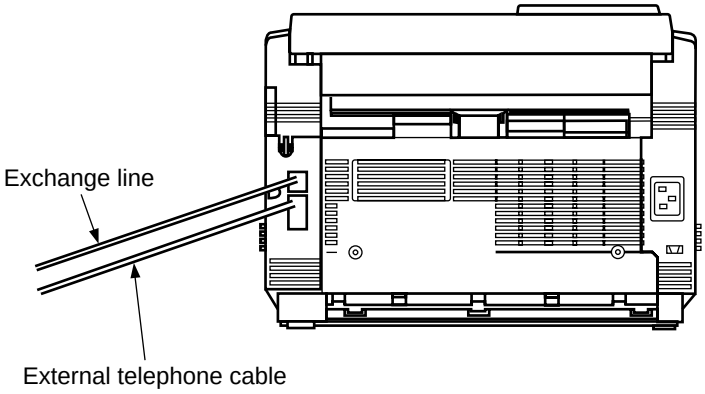

Figure 2.5 Telephone and Line Connections

2.1.8 Packing for Shipment

CAUTION: When packing the OKIFAX 5650 for shipment, REMOVE THE IMAGE DRUM AND TONER FROM THE UNIT AND SHIP SEPARATELY!
Failure to do this will result in damage to the machine."

2.2 Programming and Initial Settings

2.2.1 Initial Settings

2.2.1.1 General Procedure of Key Operation

Figure 2.6 shows the general procedure of key operation.

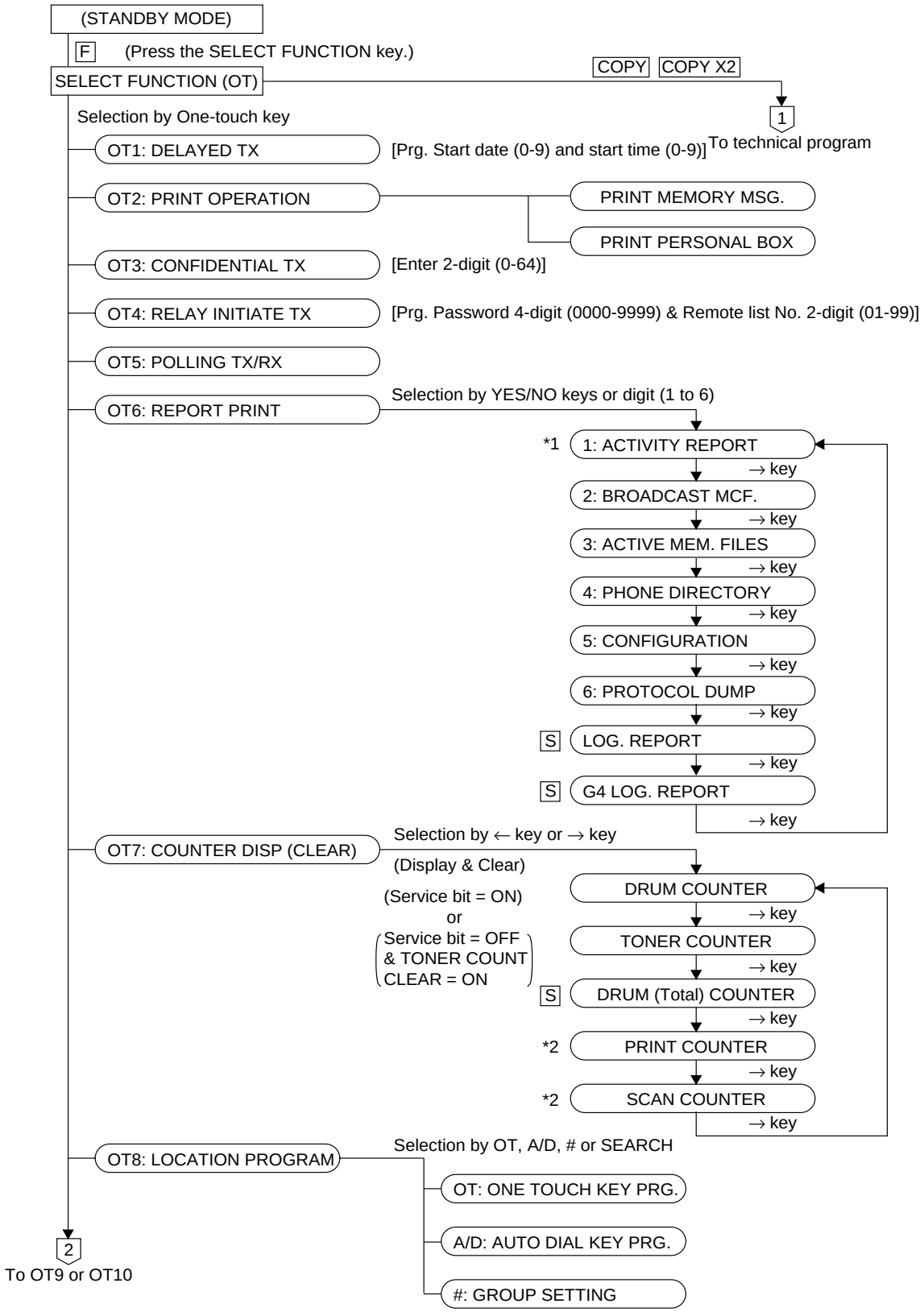

Figure 2.6 (1/3)

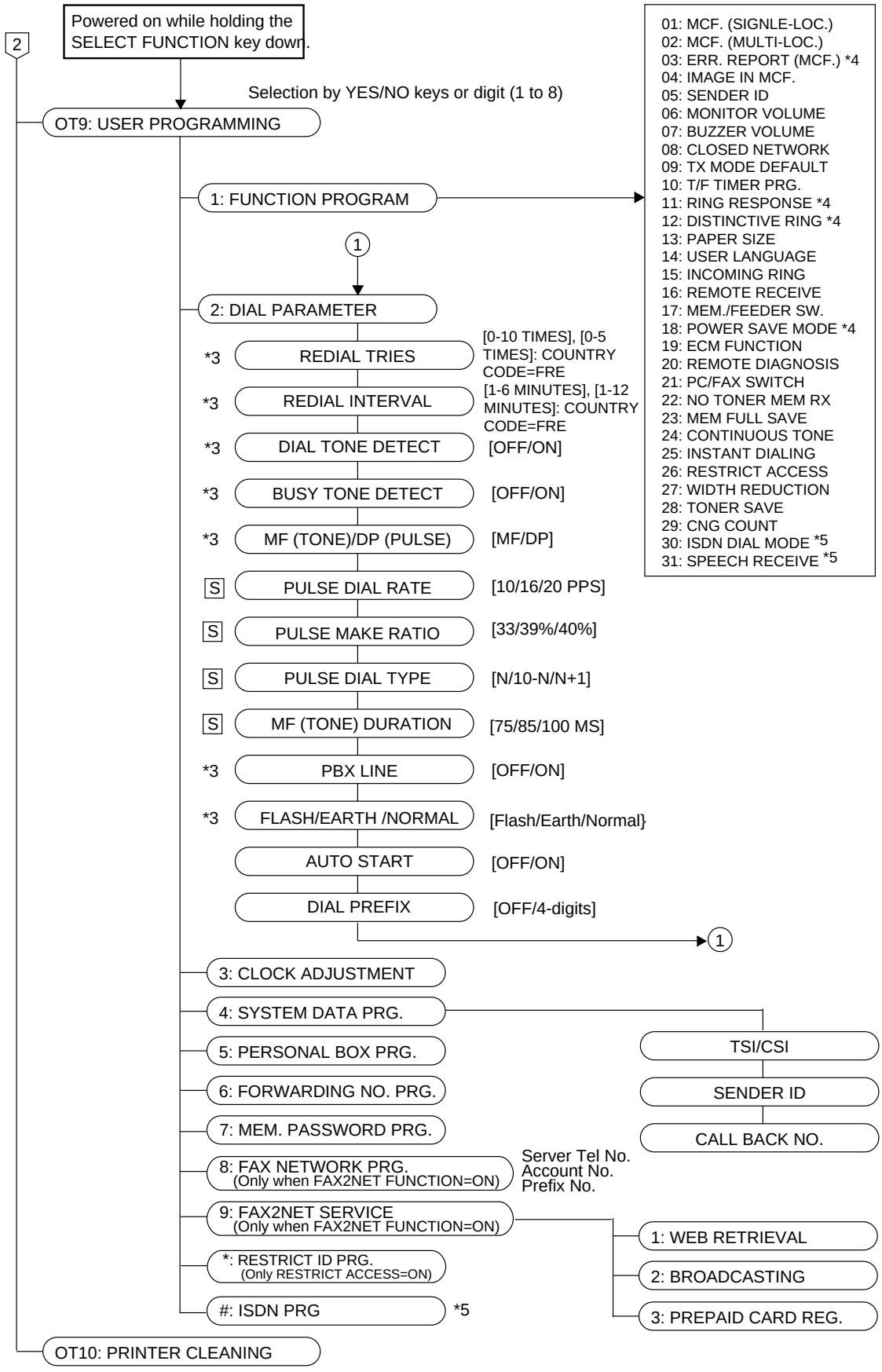
2
Powered on while holding the SELECT FUNCTION key down.
Selection by YES/NO keys or digit (1 to 8)
OT9: USER PROGRAMMING
1: FUNCTION PROGRAM
01: MCF. (SIGNLE-LOC.)
02: MCF. (MULTI-LOC.)
03: ERR. REPORT (MCF.) *4
04: IMAGE IN MCF.
05: SENDER ID
06: MONITOR VOLUME
07: BUZZER VOLUME
08: CLOSED NETWORK
09: TX MODE DEFAULT
10: T/F TIMER PRG.
11: RING RESPONSE *4
12: DISTINCTIVE RING *4
13: PAPER SIZE
14: USER LANGUAGE
15: INCOMING RING
16: REMOTE RECEIVE
17: MEM./FEEDER SW.
18: POWER SAVE MODE *4
19: ECM FUNCTION
20: REMOTE DIAGNOSIS
21: PC/FAX SWITCH
22: NO TONER MEM RX
23: MEM FULL SAVE
24: CONTINUOUS TONE
25: INSTANT DIALING
26: RESTRICT ACCESS
27: WIDTH REDUCTION
28: TONER SAVE
29: CNG COUNT
30: ISDN DIAL MODE *5
31: SPEECH RECEIVE *5
1
2: DIAL PARAMETER
*3 REDIAL TRIES
[0-10 TIMES], [0-5 TIMES]: COUNTRY CODE=FRE
*3 REDIAL INTERVAL
[1-6 MINUTES], [1-12 MINUTES]: COUNTRY CODE=FRE
*3 DIAL TONE DETECT
[OFF/ON]
*3 BUSY TONE DETECT
[OFF/ON]
*3 MF (TONE)/DP (PULSE)
[MF/DP]
S PULSE DIAL RATE
[10/16/20 PPS]
S PULSE MAKE RATIO
[33/39%/40%]
S PULSE DIAL TYPE
[N/10-N/N+1]
S MF (TONE) DURATION
[75/85/100 MS]
*3 PBX LINE
[OFF/ON]
*3 FLASH/EARTH /NORMAL
[Flash/Earth/Normal}
AUTO START
[OFF/ON]
DIAL PREFIX
[OFF/4-digits]
1
3: CLOCK ADJUSTMENT
4: SYSTEM DATA PRG.
TSI/CSI
SENDER ID
CALL BACK NO.
5: PERSONAL BOX PRG.
6: FORWARDING NO. PRG.
7: MEM. PASSWORD PRG.
8: FAX NETWORK PRG.
(Only when FAX2NET FUNCTION=ON)
Server Tel No.
Account No.
Prefix No.
9: FAX2NET SERVICE
(Only when FAX2NET FUNCTION=ON)
1: WEB RETRIEVAL
2: BROADCASTING
3: PREPAID CARD REG.
*: RESTRICT ID PRG.
(Only RESTRICT ACCESS=ON)
#: ISDN PRG
*5
OT10: PRINTER CLEANING

Figure 2.6 (2/3)

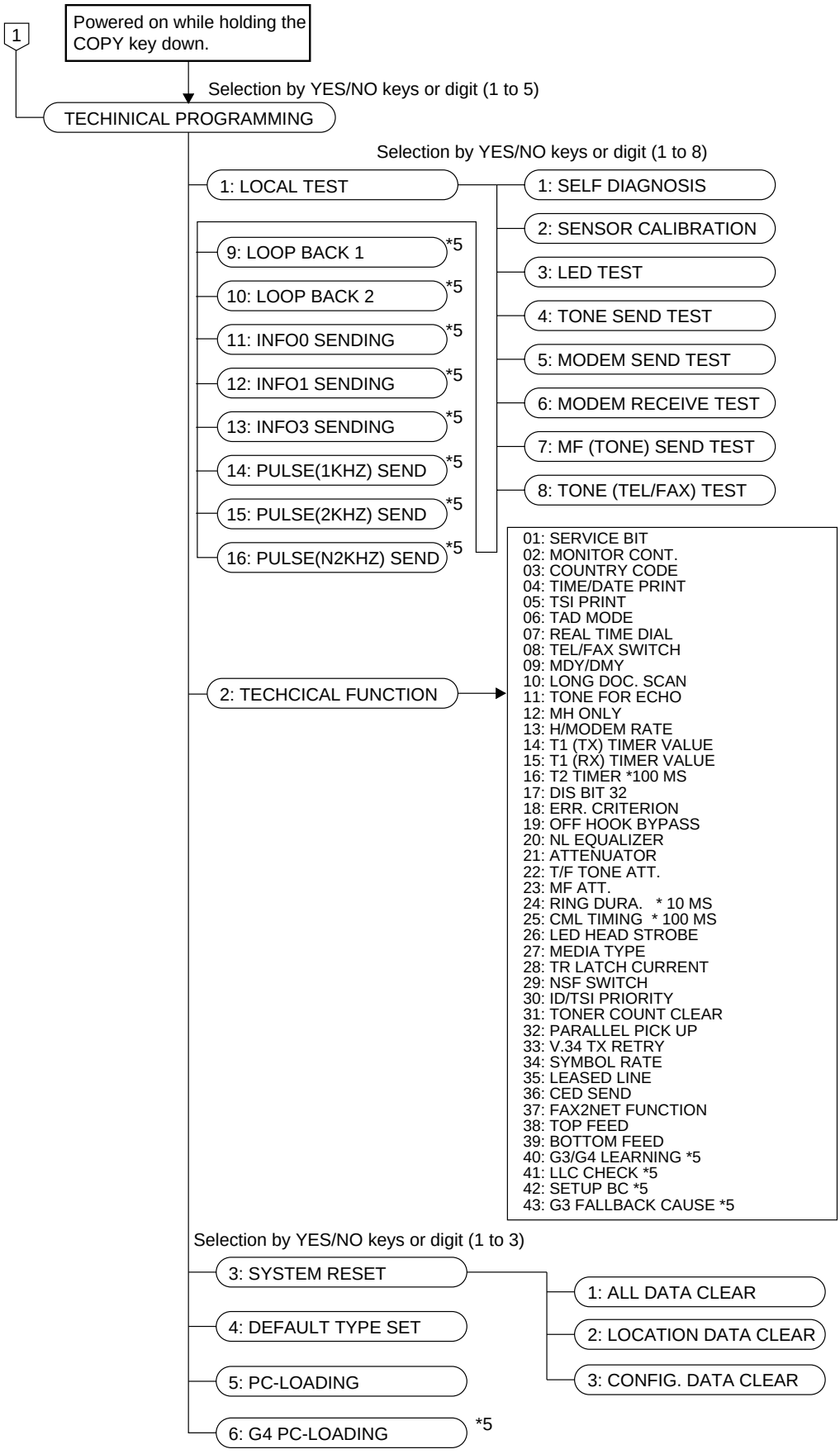
1
Powered on while holding the COPY key down.
Selection by YES/NO keys or digit (1 to 5)
TECHINICAL PROGRAMMING
Selection by YES/NO keys or digit (1 to 8)
1: LOCAL TEST
1: SELF DIAGNOSIS
2: SENSOR CALIBRATION
3: LED TEST
4: TONE SEND TEST
5: MODEM SEND TEST
6: MODEM RECEIVE TEST
7: MF (TONE) SEND TEST
8: TONE (TEL/FAX) TEST
9: LOOP BACK 1 *5
10: LOOP BACK 2 *5
11: INFO0 SENDING *5
12: INFO1 SENDING *5
13: INFO3 SENDING *5
14: PULSE(1KHZ) SEND *5
15: PULSE(2KHZ) SEND *5
16: PULSE(N2KHZ) SEND *5
2: TECHCICAL FUNCTION
01: SERVICE BIT
02: MONITOR CONT.
03: COUNTRY CODE
04: TIME/DATE PRINT
05: TSI PRINT
06: TAD MODE
07: REAL TIME DIAL
08: TEL/FAX SWITCH
09: MDY/DMY
10: LONG DOC. SCAN
11: TONE FOR ECHO
12: MH ONLY
13: H/MODEM RATE
14: T1 (TX) TIMER VALUE
15: T1 (RX) TIMER VALUE
16: T2 TIMER *100 MS
17: DIS BIT 32
18: ERR. CRITERION
19: OFF HOOK BYPASS
20: NL EQUALIZER
21: ATTENUATOR
22: T/F TONE ATT.
23: MF ATT.
24: RING DURA. * 10 MS
25: CML TIMING * 100 MS
26: LED HEAD STROBE
27: MEDIA TYPE
28: TR LATCH CURRENT
29: NSF SWITCH
30: ID/TSI PRIORITY
31: TONER COUNT CLEAR
32: PARALLEL PICK UP
33: V.34 TX RETRY
34: SYMBOL RATE
35: LEASED LINE
36: CED SEND
37: FAX2NET FUNCTION
38: TOP FEED
39: BOTTOM FEED
40: G3/G4 LEARNING *5
41: LLC CHECK *5
42: SETUP BC *5
43: G3 FALLBACK CAUSE *5
Selection by YES/NO keys or digit (1 to 3)
3: SYSTEM RESET
1: ALL DATA CLEAR
2: LOCATION DATA CLEAR
3: CONFIG. DATA CLEAR
4: DEFAULT TYPE SET
5: PC-LOADING
6: G4 PC-LOADING *5

Figure 2.6 (3/3)

Note: When the machine is in POWER SAVE MODE, the machine returns to standby mode by pressing the START key.

*1: In case of Germany, Austria and Switzerland version, ACTIVITY REPORT message does not appear on the LCD display.

*2: User can read no. of counter in LCD but can not clear.

*3: User can not select in some countries.

*4: When the service bit is set to OFF, ERR. REPORT (MCF.) of No. 03, RING RESPONSE of No. 11, DISTINCTIVE RING of No. 12 and POWER SAVE MODE of No. 18 are bypassed to the next function No. in some countries.

*5: Only when G4 opt. is installed.

S : Effective if the service bit is set to ON.

2.2.1.2 Technical Functions

This section explains setting items generally conducted by service personnel, not by users.

Table 2.2 shows the initial setting items and their purposes. (The default setting is different by the individual countries.)
Each item can be accessed by entering the corresponding service number on Technical Function.

The detailed procedures of the initial setting items will be explained on the following pages.

Note 1: S-ON: Effective if the service bit has been set to ON.
FP: Function program setting
TF: Technical function setting

2: The fonts displayed on the LCD operation panel may differ from fonts written this manual.

Table 2.2 (1/8) Service Personnel Initial Settings

T.F. No.	Item	Specifications	Default
01	Service bit	Switching serviceman/user operation. ON : Service personnel's features are available. OFF : Service personnel's features are not available. To enable or disable the following functions: • Drum (Total, Print, Scan), and toner counter clear • Dial parameters • etc	
02	Line monitor control	Changing the audible monitoring range. FP +06 (To select the loudness of monitoring) ON : Enable OFF : Disable ***Note:*** In case of transmission mode, the monitor will be available during dialling, but the monitor will be switched off automatically after the elapse of specified time (about 5 sec.). However, when TF02 is set to ON, the monitor is available during communication also.	
03	Country code	Selecting the following country code: USA, INT'L, GBR, IRL, NOR, SWE, FIN, DEN, GER, HUN, TCH, POL, SUI, AUT, BEL, HOL, FRE, POR, ESP, ITA, GRE, AUS, NZL, SIN, HNG, LTA, MEX, CHN, RUS	
04	Time and date print	Enables or disables the function of printing local date and time at the top of the received page. OFF/ONCE/ALL selectable. OFF: Time and date are not printed ONCE: Time and date are printed at the top of the first page only. ALL: Time and date are printed at the top of every page. ***Note:*** Set at receiver.	
05	TSI print	Switches the function of printing TSI data from remote fax onto the received pages. TSI is printed at the leading edge of first reproduced copy. (Set at receiver.) When TF04 is set to "ALL", TSI is printed for the all received pages. ON : Enable OFF : Disable (Reference) TSI; Transmitting Subscriber Identification	

Table 2.2 (2/8) Service Personnel Initial Settings

T.F. No.	Item	Specifications	Default
06	TAD mode (For external telephone answering device.)	Switches an automatic voice message response to the calling station. TAD mode is of three types (TYPE1/TYPE2/ TYPE3). OFF/TYPE1/TYPE2/TYPE3 selectable. TYPE1 means: 1. RING comes. 2. The TAD answers, returns the recorded voice message in TAD to calling party. 3. The FAX machine will continue to detect CNG signal while TAD works. 4. If the FAX machine detects CNG signal, the fax will go into normal receiving mode. 5. Even though the fax does not detect CNG signal, the fax will go to receiving mode in hook-on condition. TYPE2 means: The operations of No. 1 to No. 4 are the same as those of TYPE 1. 5. If the fax does not detect CNG signal during working of TAD, the machine will go to standby mode. TYPE3 means: The operations of No. 1 to No. 2 are the same as those of TYPE 1. 3. The fax does not detect CNG signal during 15 seconds from TAD operation starting. 4. The fax starts CNG detection after 15 seconds from TAD operation. If the CNG is detected, the fax goes to the normal receive mode. 5. If the fax does not detect the CNG during TAD operation, the fax goes to standby mode.	
07	Real time dialing	Enables or disables the real time dialling. 3 types selectable. (OFF/TYPE1/TYPE2) TYPE1: Real-time dialling is available when the telephone handset is OFF-HOOK. TYPE2: Real-time dialling is available when the telephone handset is OFF-HOOK or HOOK key is pressed.	
08	TEL/FAX switching	Enables or disables the TEL/FAX automatic switching. ON : Enable OFF : Disable (Related item: FP10, TF23)	
09	MDY/DMY	Switches LCD display and report print from month/day/year to day/month/year or vice versa. MDY/DMY selectable.	

Table 2.2 (3/8) Service Personnel Initial Settings

<table>
<tr><th>T.F. No.</th><th>Item</th><th>Specifications</th><th>Default</th></tr>
<tr><td>10</td><td>Long document SCAN</td><td>Switches the function of transmitting long-size document (more than 360 mm).
ON : 1500 mm or 60 min.
OFF : 360 mm or 60 min.

Note: 60 min is transmitting time.</td><td></td></tr>
<tr><td>11</td><td>Tone for Echo</td><td>Switches the function to apply to poor lines with echo in overseas transmission, etc.
ON: Enables
OFF: Disables

<table><tr><td>Echo Protection</td><td>OFF</td><td>ON</td></tr><tr><td>Ignore 1st DIS</td><td>OFF</td><td>ON</td></tr><tr><td>CED-DIS timer</td><td>75 ms</td><td>1.5 sec</td></tr><tr><td>Tone for echo</td><td>OFF</td><td>ON</td></tr></table>(TF-11 table)</td><td></td></tr>
<tr><td>12</td><td>MH only</td><td>Switches the function of limiting image compression to the MH codes only.
ON : Coding scheme is MH only. When the receiving image data is affected by noise on the telephone line.
OFF : Any of MH, MR and MMR.</td><td></td></tr>
<tr><td>13</td><td>High-speed modem rate</td><td>Specifies the modem’s starting speed, 33.6K, 28.8K, 14.4k, 9.6k, or 4.8kbps.</td><td></td></tr>
<tr><td>14</td><td>T1 (TX), timeout value</td><td>T1 (TX) is a time to detect up to 3 flags of DIS sent from a called fax machine.
Registers the time duration (in seconds) for which the fax waits for the remote station’s answer.
This timer starts when the last dialled digit has been sent in the automatic transmission mode.

*Selects the 3 digit timer
010 to 255 sec selectable.(in one second steps)</td><td></td></tr>
<tr><td>15</td><td>T1 (RX), timeout value</td><td>T1 (RX), timeout value (later)
Registers the time duration (in seconds) for which the fax waits for the remote station’s answer of individual country’s specification. This timer starts after the DIS is transmitted. If T1 times out, the fax disconnects the line.

*Selects the 3 digit timer
010 to 255 sec selectable. (in one second steps)</td><td></td></tr>
</table>

Table 2.2 (4/8) Service Personnel Initial Settings

T.F. No.	Item	Specifications	Default
16	T2, timeout value	T2, timeout value (layer) Registers the time duration (in seconds) for which the receiving fax detects the EOL (End Of Line) signal during phase C. The fax will disconnect the line when EOL cannot be detected within T2. *Selects the 3 digit timer 001 to 255 selectable. (in 100ms steps) For example: 060 ∞ 100 ms =6 s	
17	DIS bit32	Selects whether a called fax should transmit DIS bit 32 or not. ON : Transmits DIS bit 32. OFF: Does not transmit DIS bit 32. (When OFF, the following fanctions will not be supported: • Reception of Extra Fine (8∞15.4 line/mm) • 300 dpi • SEP/SUB frames ***Note:*** To improve compatibility between this fax machine and other company's fax machines. If communication error occurs frequently when a fax sender is an older version.	
18	Error criterion	Registers the threshould value whether to transmit RTN or MCF signal when the error occurs in received data. 00% to 99% selectable. (in one percent steps)	
19	Off-hook bypass	Switches the function of maintaining communication without hooking up the telephone set in normal testing etc. ON : Enable OFF: Disable	
20	NL equalizer	Selects equalization for the following cable lengths: 0 km/1.8 km/3.6 km/ 7.2 km selectable. ***Note:*** Relative to 1700Hz for length of 0.4mm diameter cable. Equalizer level is the difference of gain of equalized signal between 0.3kHz and 3.4kHz.	

Table 2.2 (5/8) Service Personnel Initial Settings

T.F. No.	Item	Specifications	Default
21	Modem attenuator	Adjusts the attenuation (dB) for the message send signal power level. Adjusting value is 0 to 15 dB in one dB steps. Since the maximum send signal power level (dB) of the fax is at 0 dB, you can select 0 dB to -15 dB in one dB steps for the send signal power level. 0 to 15 dB. selectable (except FRE) 7 to 15 dB, selectable (FRE) At country code = CHN, set the actual set value +2dB. ***Note:*** The send signal power level should meet your country's regulation. Some countries may specify the power level at a telephone exchange. In that case, you should substract the specified level from the line cable attenuation to determine the send level of your fax.	
22	T/F tone attenuator (for TEL/FAX SW)	Adjusts the attenuation (dB) for the quasi-ring back tone send signal of TEL/FAX switching. Adjusting value is 0 to 15 dB in one dB steps. At country code = CHN, set the actual set value +2dB.	
23	MF attenuator	Adjusts the attenuation (dB) for the send MF tone power level. Adjusting value is 0 to 15 dB in one dB steps. At country code = CHN, set the actual set value +2dB.	
24	Ring duration detection time	Selects the minimum ring detection time to meet country's requirements. Adjusting time is 100 MS to 990 MS in 10 MS steps. 10 to 99 selectable. For example: (120 ms) 12 ∞ 10 ms = 120 ms	
25	CML timing	Selects the time from end of ring to CML-ON. Adjusting time is 100 MS to 1900 MS in 100 MS steps. 0 to 19 selectable. For example: (300 ms) 03 ∞ 100 ms = 300 ms	

Table 2.2 (6/8) Service Personnel Initial Settings

T.F. No.	Item	Specifications	Default
26	Strobe for LED head	Setting of LED print head strobe signals (00000-11111). Selection of strobe width in LED head. "00000" is lightest and "11111" is darkest. ***Note 1:*** When the rank marking of the new replaced LED print head (new part) is same as that of the old used LED print head (old part), you do not always have to set the LED print head strobe signal. ***2:*** Intensity ranking is determined by the first, second and third digits from the right on the LED print head serial number. (i.e. in .... 212, 212 is the intensity ranking.)	

Setting of Technical Function No. 26

Setting / Rank Marking	MSB ↑ LSB																														
		0	0	0	0	0	0	0	0	0	0	0	0	0	0	0	0	1	1	1	1	1	1	1	1	1	1	1	1	1	1
		0	0	0	0	0	0	0	0	1	1	1	1	1	1	1	1	0	0	0	0	0	0	0	0	1	1	1	1	1	1
		0	0	0	0	1	1	1	1	0	0	0	0	1	1	1	1	0	0	0	0	1	1	1	1	0	0	0	0	1	1
		0	0	1	1	0	0	1	1	0	0	1	1	0	0	1	1	0	0	1	1	0	0	1	1	0	0	1	1	0	0
		0	1	0	1	0	1	0	1	0	1	0	1	0	1	0	1	0	1	0	1	0	1	0	1	0	1	0	1	0	1
291—313										*																					
269—290											*																				
248—268												*																			
229—247													*																		
212—228														*																	
196—211															*																
181—195																*															
168—180																	*														
155—167																		*													
143—154																			*												
132—142																				*											
122—131																					*										
113—121																						*									
105—112																							*								
100—104																								*							

27	Media type	Selects the recording paper according to its quality. Medium, Medium-heavy and Heavy selectable.	
28	Transfer roller latch current	Selects the latch current for transfer roller. (–2/–1/0/+1/+2)	
29	NSF switch	NSF signal transmission selectable. ON : Transmits NSF signal OFF : Disables NSF signal ***Note:*** When NSF switch = OFF, the fax operation is shown as below.	

Table 2.2 (7/8) Service Personnel Initial Settings

<table>
<tr><th>T.F. No.</th><th>Item</th><th>Specifications</th><th>Default</th></tr>
<tr><td></td><td></td><td>• When transmitting, even if OKI NSF signal is detected from the remote machine, the fax transmits DCS signal (The fax does not transmit NSC signal.)
• When Remote Diag. = ON, the fax transmits NSF signal.</td><td></td></tr>
<tr><td>30</td><td>ID/TSI priority</td><td>Selects ID/TSI printing in the distant station ID column of the report.
ID: Prints NSF signal with personal ID.
TSI: Prints TSI signal without NSF.
<table><tr><th rowspan="2">Priority</th><th colspan="2">Set to ID</th><th colspan="2">Set to TSI</th></tr><tr><th>TX</th><th>RX</th><th>TX</th><th>RX</th></tr><tr><td>1</td><td>Personal ID</td><td>Personal ID</td><td>CSI</td><td>TSI</td></tr><tr><td>2</td><td>CSI</td><td>TSI</td><td>Dial No.</td><td>Dial No.</td></tr><tr><td>3</td><td>Dial ID</td><td>Dial ID</td><td>Personal ID</td><td>Personal ID</td></tr><tr><td>4</td><td>Dial No.</td><td>Dial No.</td><td>-</td><td>-</td></tr></table>
Note: LCD display and Report printing gives preference to TSI/CSI signal than Personal ID.</td><td></td></tr>
<tr><td>31</td><td>Toner Count Clear</td><td>Enables or disables the clear operating of Toner Counter Clear (OT7) without Service bit ON/OFF (TF01).
ON : Enables
OFF : Disables</td><td></td></tr>
<tr><td>32</td><td>Parallel Pick Up</td><td>To control a receiving fax by 2 digits (the same digits as remote reception) from a telephone set connected parallel to the telephone line.
ON : To enable
OFF : To disable
(For the details, see Section 4.3. Outline of Parallel Pick Up.)</td><td></td></tr>
<tr><td>33</td><td>V.34 TX Retray</td><td>Determine whether the V.34 communication error is to be remembered.
ON : Remembered
OFF : Not remembered</td><td></td></tr>
<tr><td>34</td><td>Symbol Rate</td><td>Set the V.34 modem symbol rate.
2400/2800/3200/3429 selectable.</td><td></td></tr>
<tr><td>35</td><td>Leased Line</td><td>Sets to leased line mode for China. When setting to this mode, CML, DP, and SR relays must be always set to ON. Sending on leased line is performed with document ON, no address designation and pressing of the START key.
Receiving on leased line is performed by answering automatically when detecting PIS or CNG.
ON : Leased line mode
OFF : No leased line mode</td><td></td></tr>
</table>

Table 2.2 (8/8) Service Personnel Initial Settings

T.F. No.	Item	Specifications	Default
36	CED Send	Sets to send CED or not at the time of incoming call. ON : Sending CED OFF : Not sending CED	
37	Fax2Net Function	Set up whether to make Fax2Net service. ON : Enable OFF : Disable *The following Fax2Net service can use only when Fax2Net function is set to ON. Web Retrieval/Broadcasting/Prepaid Registration	
38	Top Feed	Adjusts read start position of various machines. -10 to +9 mm (in steps of 1 mm)	
39	Bottom Feed	Adjusts read end position of various machines. -2 to +10 mm (in steps of 1 mm)	
40	G3/G4 Learning	Sets up whether to learn G3/G4 communication. ON : Learn OFF : Not learn *Setting disabled if without ISDN option.	
41	LLC Check	Determine whether the lower layer compatibility information instracted from the calling side is analyzed. ON : Analyzed OFF : Not analyzed *The setting data must be transferred to the G4 board. *Cannot be selected when G4 option board is not installed.	
42	G3 Setup BC	Sets to send speech by BC of SETUP at making a G3I call as there exists an ISDN-PBX which accepts only the incoming call for speech purpose (BC=speech) Speech (for speech purpose) 3.1kHz (for communication Purpose)	
43	G3 Fallback Cause (54 kinds of service code)	Enables to select service code for automatic fallback to G3 transmission if G4 transmission is faulty. There are 54 kinds of service codes that can be selected. (Refer to G3 fallback service code list). The service code not selected is dealt with as communication error. Settings values: Setting enabled only when G4 opt. is mounted.	

Table 2.3 (1/2) Technical Default Setting

No.	Technical Setting Items	Setting Selection	1 ODA	2 LTA	3 E-INT	4 GER	5 E-FRE	6 0-AUS	7 0-NZL	8 0-SIN	9 0-HNG	10 L-AG	11 IRL	12 DEN	13 SWE	Note
1	SERVICE BIT	ON/OFF	OFF	OFF	OFF	OFF	OFF	OFF	OFF	OFF	OFF	OFF	OFF	OFF	OFF	
2	MONITOR CONT.	ON/OFF	OFF	OFF	OFF	OFF	OFF	OFF	OFF	OFF	OFF	OFF	OFF	OFF	OFF	
3	COUNTRY CODE	USA INT'L GBR IRL NOR SWE FIN DEN GER HUN TCH POL SUI AUT BEL HOL FRE POR ESP ITA GRE AUS NZL SIN HNG LTA MEX RUS	USA	LTA	GBR	GER	FRE	AUS	NZL	SIN	HNG	USA	IRL	DEN	SWE	
4	TIME/DATE PRINT	0: OFF/ 1: ONCE/2: ALL	OFF	OFF	OFF	ALL	OFF	OFF	ALL	ONCE	OFF	OFF	OFF	ONCE	ONCE	
5	TSI PRINT	ON/OFF	ON	ON	ON	ON	ON	ON	ON	ON	ON	ON	ON	ON	ON	
6	TAD MODE	0: OFF/ 1: TYPE1/2: TYPE2/3: TYPE3	TYP2	TYP2	OFF	TYP1	TYP1	OFF	TYP1	OFF	OFF	TYP2	OFF	TYP2	TYP2	
7	REAL TIME DIAL	0: OFF/ 1: TYPE1/2: TYPE2	TYP2	TYP2	TYP2	TYP2	TYP2	TYP2	TYP2	TYP2	TYP2	TYP2	TYP2	TYP2	TYP2	By PTT Parameter
8	TEL/FAX SW	ON/OFF	ON	ON	ON	ON	ON	ON	ON	ON	ON	ON	ON	ON	ON	
9	MDY/DMY	0: MDY/ 1: DMY	MDY	MDY	DMY	DMY	DMY	DMY	DMY	DMY	DMY	MDY	DMY	MDY	MDY	
10	LONG DOC. SCAN	ON/OFF	OFF	OFF	OFF	ON	ON	OFF	OFF	OFF	OFF	OFF	ON	OFF	OFF	
11	TONE FOR ECHO	ON/OFF	OFF	OFF	OFF	OFF	OFF	OFF	OFF	OFF	OFF	OFF	OFF	OFF	OFF	
12	MH ONLY	ON/OFF	OFF	OFF	OFF	OFF	OFF	OFF	OFF	OFF	OFF	OFF	OFF	OFF	OFF	
13	H/MODEM RATE	33.6K/28.8K/14.4K/9.6K/4.8K	33.6K	33.6K	33.6K	33.6K	33.6K	33.6K	33.6K	33.6K	33.6K	33.6K	33.6K	33.6K	33.6K	
14	T1(TX) TIMER VALUE	010 - 255 sec	59	59	60	60	140	30	40	60	30	59	60	60	60	By PTT Parameter
15	T1(RX) TIMER VALUE	010 - 255 sec	35	35	35	35	35	35	35	35	35	35	35	35	35	
16	T2 TIMER VALUE	001 - 255 (100ms - 25.5 sec)	130	130	130	60	51	130	130	130	130	130	130	130	130	Base Timer=100ms
17	DIS BIT 32	ON/OFF	ON	ON	ON	ON	ON	ON	ON	ON	ON	ON	ON	ON	ON	
18	ERR. CRITERION	0 - 99	10	10	10	10	10	10	10	10	10	10	10	10	10	
19	OFF HOOK BYPASS	ON/OFF	OFF	OFF	OFF	OFF	OFF	OFF	OFF	OFF	OFF	OFF	OFF	OFF	OFF	
20	NL EQULIZER	0km/ 1.8km/3.6km/7.2km	0km	0km	0km	0km	0km	0km	0km	0km	0km	0km	0km	0km	0km	
21	ATTENUATOR	0 - 15dB	10dB	10dB	11dB	9dB	10dB	11dB	11dB	11dB	11dB	10dB	11dB	10dB	11dB	FRE = 7 - 15DB, CHN=+2DB
22	T/F TONE ATT	0 - 15dB	10dB	10dB	9dB	7dB	11dB	9dB	9dB	9dB	9dB	10dB	9dB	10dB	9dB	CHN=+2DB
23	MF. ATT	0 - 15dB	3dB	8dB	6dB	7dB	5dB	5dB	6dB	5dB	8dB	3dB	5dB	8dB	8dB	CHN=+2DB
24	RING DURA. *10MS	10 - 99 (*10 ms)	12	12	14	14	60	12	14	14	14	12	14	12	14	
25	CML TIMING *100MS	1 - 19 (*100 ms)	3	3	3	3	15	3	12	12	12	3	3	3	1	
26	HEAD STROBE	00000 - 11111	10100	10100	10100	10100	10100	10100	10100	10100	10100	10100	10100	10100	10100	
27	MEDIA TYPE	M/MH/H	M	M	M	M	M	M	M	M	M	M	M	M	M	
28	TR LATCH CURRENT	-2/-1/0/+1/+2	0	0	0	0	0	0	0	0	0	0	0	0	0	
29	NSF SWITCH	ON/OFF	ON	ON	ON	ON	ON	ON	ON	ON	ON	ON	ON	ON	ON	
30	ID/TSI PRIORITY	ID/TSI	ID	ID	ID	TSI	ID	ID	ID	ID	ID	ID	ID	ID	ID	
31	TONER COUNT CLEAR	ON/OFF	OFF	OFF	OFF	OFF	OFF	OFF	OFF	OFF	OFF	OFF	OFF	OFF	OFF	
32	PARALLEL PICK UP	ON/OFF	ON	ON	ON	OFF	ON	ON	OFF	ON	ON	ON	ON	ON	ON	
33	V.34 TX RETRY	ON/OFF	ON	ON	ON	ON	ON	ON	ON	ON	ON	ON	ON	ON	ON	
34	SYMBOL RATE	2400/2800/3200/3429	3429	3429	3429	3429	3429	3429	3429	3429	3429	3429	3429	3429	3429	
35	LEASED LINE	ON/OFF	OFF	OFF	OFF	OFF	OFF	OFF	OFF	OFF	OFF	OFF	OFF	OFF	OFF	
36	CED SEND	ON/OFF	ON	ON	ON	ON	ON	ON	ON	ON	ON	ON	ON	ON	ON	
37	FAX2NET FUNCTION	ON/OFF	OFF	OFF	ON	ON	ON	OFF	OFF	OFF	OFF	OFF	OFF	ON	ON	
38	TOP FEED	Top: -10mm-+9mm	0mm	0mm	0mm	0mm	0mm	0mm	0mm	0mm	0mm	0mm	0mm	0mm	0mm	
39	BOTTOM FEED	Bottom: -2mm-+10mm	0mm	0mm	0mm	0mm	0mm	0mm	0mm	0mm	0mm	0mm	0mm	0mm	0mm	
40	G3/G4 LEARNING	ON/OFF	ON	ON	ON	ON	ON	ON	ON	ON	ON	ON	ON	ON	ON	Only ISDN opt. Installed
41	LLC CHECK	ON/OFF	OFF	OFF	OFF	OFF	OFF	OFF	OFF	OFF	OFF	OFF	OFF	OFF	OFF	Only ISDN opt. Installed
42	G3 SETUP BC	3.1K/SPEC	SPEC	SPEC	SPEC	SPEC	SPEC	SPEC	SPEC	SPEC	SPEC	SPEC	SPEC	SPEC	SPEC	Only ISDN opt. Installed
43	G3 FALLBACK CAUSE	select from all 50 kinds of service codes	It doesn't have default data with each default type. Only one kind has data as a device.													Only ISDN opt. Installed

E-XXX=OEL-XXX, O-XXX=OKI-XXX, L-XXX=LANIER-XXX

Note: As for the setting of the part of mesh, Default-data does'nt exist in the Default-file. This setting has the data which are characteristic of the device.

Table 2.3 (2/2) Technical Default Setting

No.	Technical Setting Items	Setting Selection	14 NOR	15 SUI	16 AUT	17 HOL	18 ITA	19 ESP	20 CHN	(21) Factory	Note
1	SERVICE BIT	ON/OFF	OFF	OFF	OFF	OFF	OFF	OFF	OFF	ON	
2	MONITOR CONT.	ON/OFF	OFF	OFF	OFF	OFF	OFF	OFF	OFF	ON	
3	COUNTRY CODE	USA INT'L GBR IRL NOR SWE FIN DEN GER HUN TCH POL SUI AUT BEL HOL FRE POR ESP ITA GRE AUS NZL SIN HNG LTA MEX RUS	NOR	SUI	AUT	HOL	ITA	ESP	CHN	INT'L	
4	TIME/DATE PRINT	0: OFF/ 1: ONCE/2: ALL	OFF	ALL	ALL	ONCE	ALL	ONCE	OFF	ONCE	
5	TSI PRINT	ON/OFF	ON	ON	ON	ON	ON	ON	ON	ON	
6	TAD MODE	0: OFF/ 1: TYPE1/2: TYPE2/3: TYPE3	OFF	TYP1	TYP1	TYP1	OFF	TYP2	TYP2	OFF	
7	REAL TIME DIAL	0: OFF/ 1: TYPE1/2: TYPE2	TYP2	TYP2	TYP2	TYP2	TYP2	TYP2	TYP2	TYP2	By PTT Parameter
8	TEL/FAX SW	ON/OFF	ON	ON	ON	ON	ON	ON	ON	ON	
9	MDY/DMY	0: MDY/ 1: DMY	DMY	MDY	DMY	DMY	DMY	DMY	MDY	DMY	
10	LONG DOC. SCAN	ON/OFF	OFF	ON	ON	OFF	OFF	OFF	OFF	OFF	
11	TONE FOR ECHO	ON/OFF	OFF	OFF	OFF	OFF	OFF	OFF	OFF	OFF	
12	MH ONLY	ON/OFF	OFF	OFF	OFF	OFF	OFF	OFF	OFF	OFF	
13	H/MODEM RATE	33.6K/28.8K/14.4K/9.6K/4.8K	33.6K	33.6K	33.6K	33.6K	33.6K	33.6K	33.6K	33.6K	
14	T1(TX) TIMER VALUE	010 - 255 sec	60	60	60	60	40	45	45	60	By PTT Parameter
15	T1(RX) TIMER VALUE	010 - 255 sec	35	35	35	35	35	35	35	35	
16	T2 TIMER VALUE	001 - 255 (100ms - 25.5 sec)	130	60	60	130	130	51	130	130	Base Timer=100ms
17	DIS BIT 32	ON/OFF	ON	ON	ON	ON	ON	ON	ON	ON	
18	ERR. CRITERION	0 - 99	10	10	10	10	10	10	10	10	
19	OFF HOOK BYPASS	ON/OFF	OFF	OFF	OFF	OFF	OFF	OFF	OFF	ON	
20	NL EQULIZER	0km/ 1.8km/3.6km/7.2km	0Km	0km	0km	0km	0km	0km	0km	0km	
21	ATTENUATOR	0 - 15dB	10dB	9dB	9dB	11dB	8dB	11dB	9dB	10dB	FRE = 7 - 15DB, CHN=+2DB
22	T/F TONE ATT	0 - 15dB	9dB	7dB	7dB	10dB	12dB	10dB	8dB	10dB	CHN=+2DB
23	MF. ATT	0 - 15dB	8dB	1dB	4dB	8dB	4dB	5dB	4dB	8dB	CHN=+2DB
24	RING DURA. *10MS	10 - 99 (*10 ms)	14	14	11	14	14	14	12	12	
25	CML TIMING *100MS	1 - 19 (*100 ms)	3	3	3	11	3	3	3	3	
26	HEAD STROBE	00000 - 11111	10100	10100	10100	10100	10100	10100	10100	10100	
27	MEDIA TYPE	M/MH/H	M	M	M	M	M	M	M	M	
28	TR LATCH CURRENT	-2/-1/0/+1/+2	0	0	0	0	0	0	0	0	
29	NSF SWITCH	ON/OFF	ON	ON	ON	ON	ON	ON	ON	ON	
30	ID/TSI PRIORITY	ID/TSI	ID	TSI	TSI	ID	ID	ID	ID	ID	
31	TONER COUNT CLEAR	ON/OFF	OFF	OFF	OFF	OFF	OFF	OFF	OFF	OFF	
32	PARALLEL PICK UP	ON/OFF	ON	OFF	OFF	OFF	ON	OFF	OFF	ON	
33	V.34 TX RETRY	ON/OFF	ON	ON	ON	ON	ON	ON	ON	ON	
34	SYMBOL RATE	2400/2800/3200/3429	3429	3429	3429	3429	3429	3429	3429	3429	
35	LEASED LINE	ON/OFF	OFF	OFF	OFF	OFF	OFF	OFF	OFF	OFF	
36	CED SEND	ON/OFF	ON	ON	ON	ON	ON	ON	ON	ON	
37	FAX2NET FUNCTION	ON/OFF	ON	OFF	OFF	ON	ON	OFF	OFF	OFF	
38	TOP FEED	-10mm-+10mm	0mm	0mm	0mm	0mm	0mm	0mm	0mm	0mm	
39	BOTTOM FEED	-10mm-+10mm	0mm	0mm	0mm	0mm	0mm	0mm	0mm	0mm	
40	G3/G4 LEARNING	ON/OFF	ON	ON	ON	ON	ON	ON	ON	ON	Only ISDN opt. Installed
41	LLC CHECK	ON/OFF	OFF	OFF	OFF	OFF	OFF	OFF	OFF	OFF	Only ISDN opt. Installed
42	G3 SETUP BC	3.1K/SPEC	SPEC	SPEC	SPEC	SPEC	SPEC	SPEC	SPEC	SPEC	Only ISDN opt. Installed
43	G3 FALLBACK CAUSE	select from all 50 kinds of service codes	It doesn't have default data with each default type. Only one kind has data as a device.								Only ISDN opt. Installed

E-XXX=OEL-XXX, O-XXX=OKI-XXX, L-XXX=LANIER-XXX

Note: As for the setting of the part of mesh, Default-data does'nt exist in the Default-file. This setting has the data which are characteristic of the device.

(1) TEL/FAX automatic switching

This function is used for the purpose of TEL/FAX automatic switching as follows.

1) If the machine detects a call with a CNG signal indicating an auto send facsimile call, it starts an automatic document receiving operation.

2) If machine detects a call without a CNG signal, machine generates the buzzer sounds as a telephone call. The calling person can hear a “ring back” tone within a predetermined time.

If the operator at the called side does not lift the handset within the predetermined time, the machine automatically starts a document receiving operation.
Voice conversation will automatically be available through the internal handset by lifting up the handset while the call buzzer is sounding.

Note1: The predetermined time is selectable between 20 or 35 sec.
(Function program No. 10)
2: No ringing signal is sent to the external telephone handset.
3: Choice of message sending level. The level is selectable from 0 to 15 dB in one dB step.
(Technical function No. 22)
4: TEL/FAX mode is available by Technical Function No.08.

• TEL/FAX mode flow chart

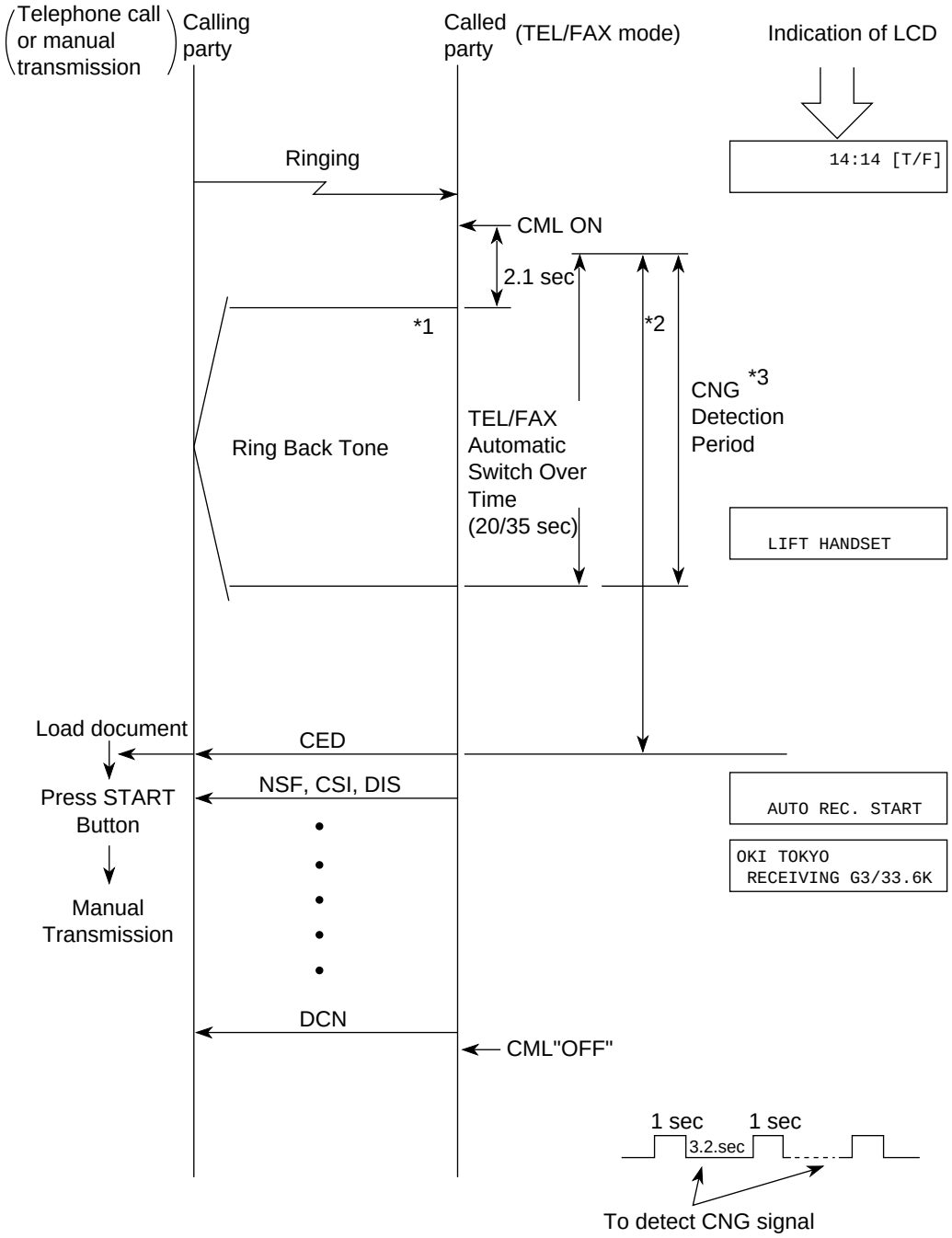

Note 1: Ring Back Tone — 1 sec. ON, 3.2 sec. OFF

2: When you want to talk by phone, pick up handset.

3: The called party can send CED to the calling party immediately to start FAX communication if the CNG is detected during the period.

4: If the fax does not detect CNG signal during working of TEL/FAX mode, LCD display indicates “LIFT HANDSET”.

(2) TAD mode

TAD: Telephone Answering Device

TAD can be connected to external telephone terminal to record your messages.

TAD records your speech and switches an automatic voice message response to the calling station.

Note ***1:*** A choice of TAD mode is available by Technical Function No. 07.
2: The predetermined time is selectable between 20 or 35 sec.

• TAD mode flow chart

In case of TYPE 1;
Even though the fax does not detect CNG signal, the fax will go to receiving mode.

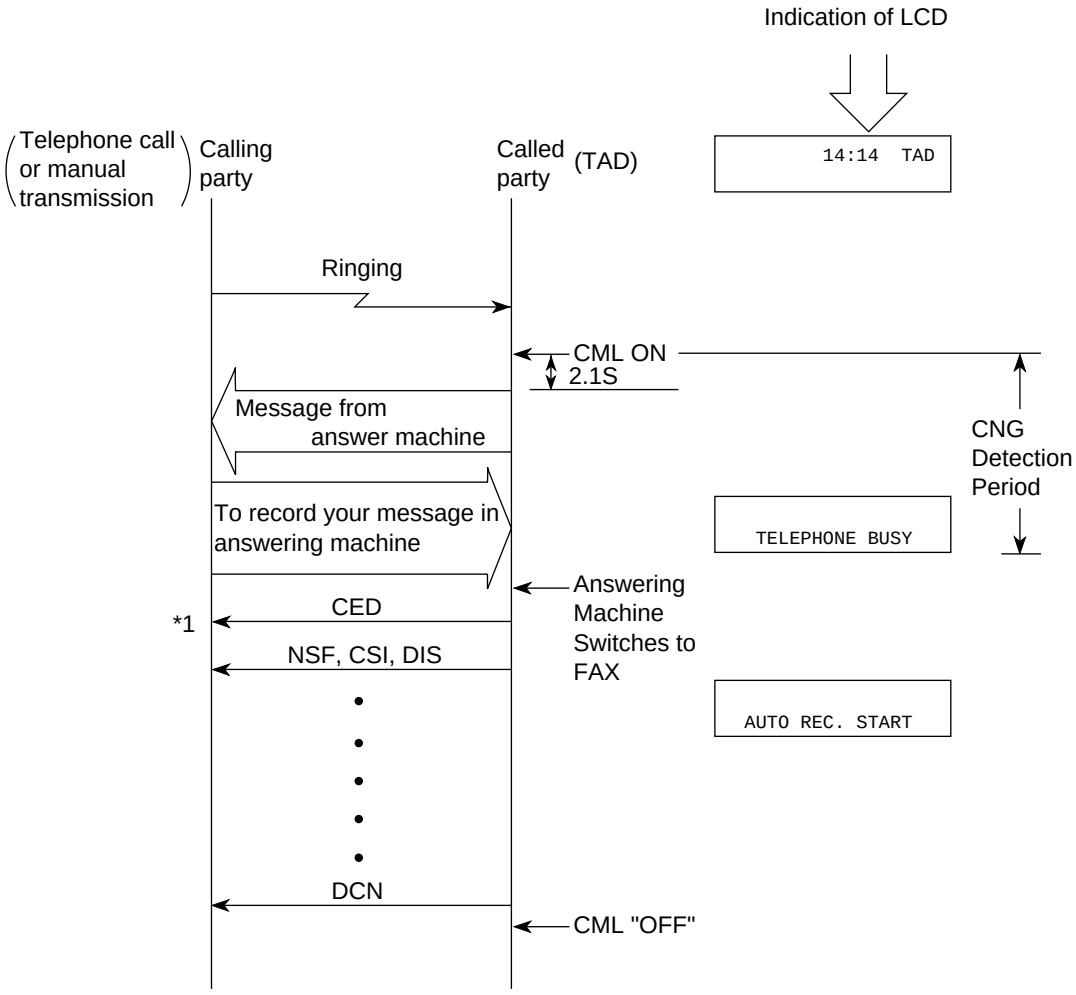

*1 To enable the manual TX mode.
Load document ∅ Press START button ∅ Manual transmission

• TAD mode flow chart

In case of TYPE 2:
If the fax does not detect CNG signal during working of TAD, the machine will go to standby mode.

In case of TYPE 3:
The fax does not detect CNG signal during 15 seconds from TAD operation starting. The fax starts CNG signal detection after 15 seconds from TAD operation.
When the fax does not detect CNG signal and ends TAD operation (on-hook of TAD operation), the fax return to standby state.

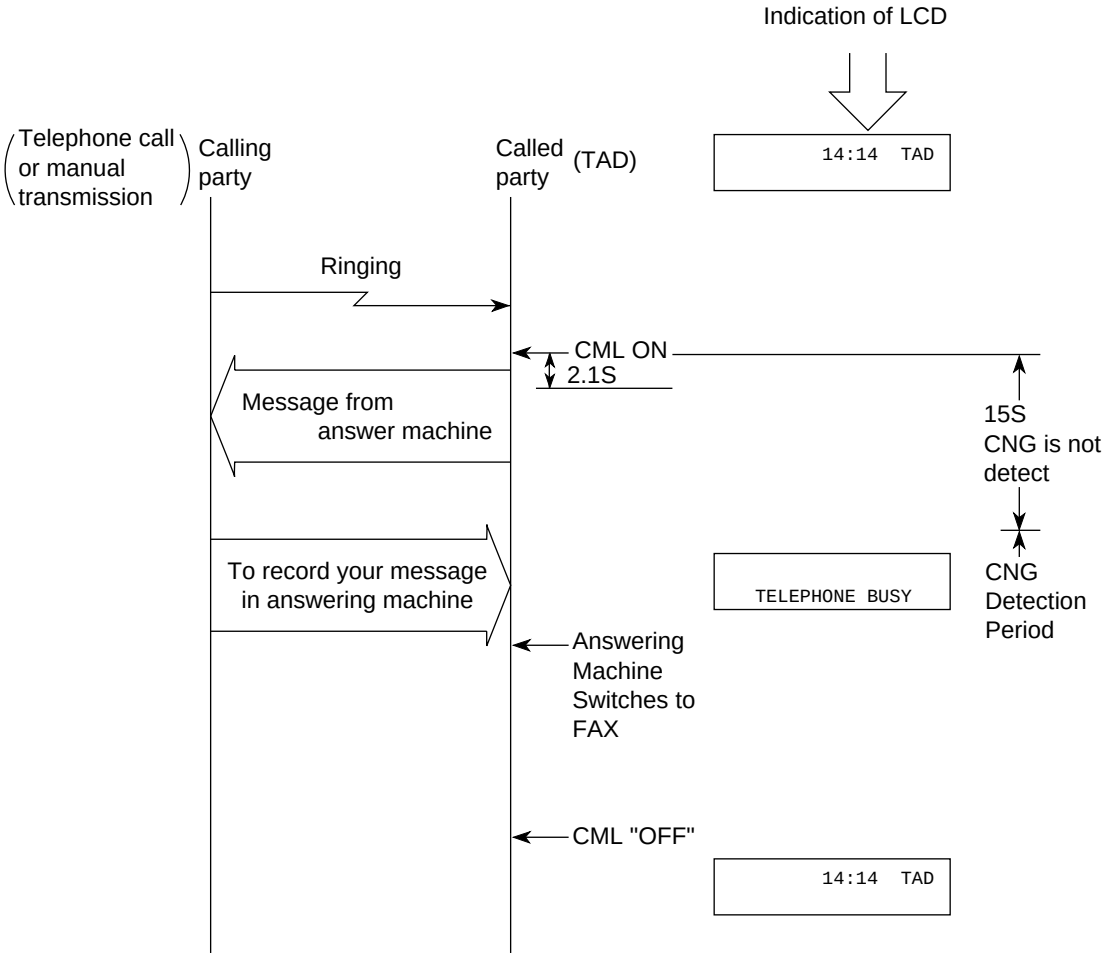

2.2.1.3 Technical Functions Example

Note: The fonts displayed on the LCD operation panel may differ from the fonts written this manual.

(1) Service Bit Setting

1) Purpose
To enable or disable the following functions:
- Drum and toner counter display (clear)
- Service default report printing
- Protocol dump report printing
- Ring response time setting
- Dial parameters setting
- Printer counters clearing

2) Procedure

Operations:

- To bring the LCD up to the desired message press SELECT FUNCTION key once, COPY key twice and "2"key. (In case of no message in memory)
- Press [←] key.
- Service bit setting is T.F. No. 01. Enter "01"

The display shows:

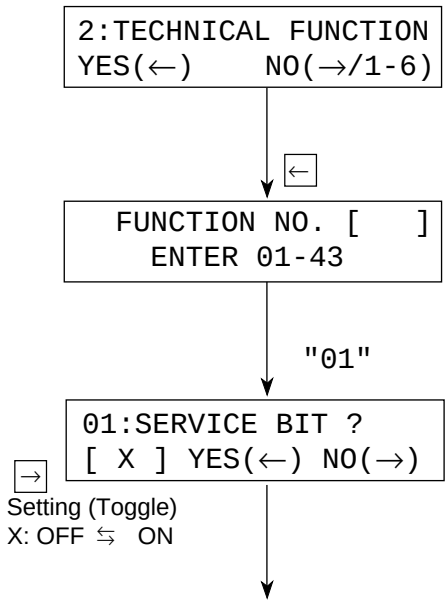

Reference: See Figure 2.6 on the next page for the general operation flow.

(2) Technical functions

Operations:

- Press SELECT FUNCTION key.
- Press COPY key twice.
- Press ← key.
- Press → key.
- Press ← key.
- Enter two-digit function number, then the display will show the set item corresponding to the number entered. If you want to set up all or several items starting with 01, then enter 01.

The display shows:

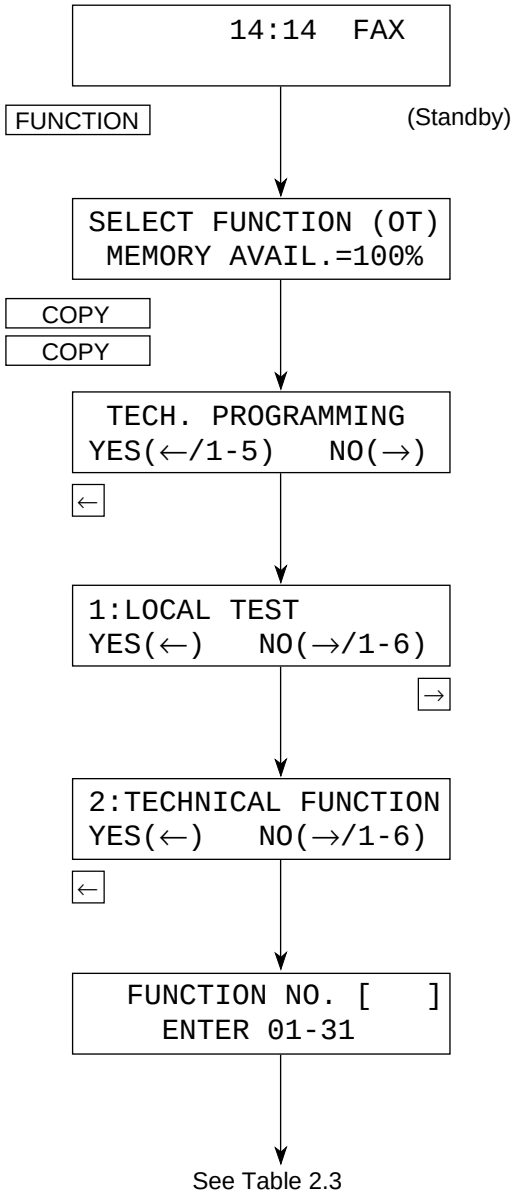

Table 2.4 (1/6) Technial Functions

T.F. No.	Name of Function	The Display Shows
01	Service bit	01:SERVICE BIT [X] YES(←) NO(→) [→] Setting (Toggle) X: OFF ⇆ ON
02	Line monitor control	02:MONITOR CONT. [X] YES(←) NO(→) [→] Setting (Toggle) X: OFF ⇆ ON
03	Country code	03:COUNTRY CODE [X] YES(←) NO(→) ***Note 1*** [→] Setting X: USA→ INT → ····· RUS
04	Time and date print	04:TIME/DATE PRINT [X] YES(←) NO(→) [→] Setting X: OFF→ ONCE→ →ALL
05	TSI print	05:TSI PRINT [X] YES(←) NO(→) [→] Setting (Toggle) X: OFF ⇆ ON
06	TAD mode (For external telephone answering device.)	06:TAD MODE [X] YES(←) NO(→) ***Note 2*** [→] Setting X: OFF→ TYPE1→ →TYPE2→TYPE3
07	Real-time dialling	07:REAL TIME DIAL [X] YES(←) NO(→) [→] Setting X: OFF→ TYPE1→ →TYPE2
08	TEL/FAX switching	08:TEL/FAX SWITCH [X] YES(←) NO(→) ***Note 3*** [→] Setting (Toggle) X: OFF ⇆ ON
09	MDY/DMY format	09:MDY/DMY [X] YES(←) NO(→) [→] Setting (Toggle) X: MDY ⇆ DMY
10	Long document transmission	10:LONG DOC. SCAN [X] YES(←) NO(→) [→] Setting (Toggle) X: OFF ⇆ ON
11	Tone for echo (echo protection)	11:TONE FOR ECHO [X] YES(←) NO(→) [→] Setting (Toggle) X: OFF ⇆ ON
12	MH only	12:MH ONLY [X] YES(←) NO(→) [→] Setting (Toggle) X: OFF ⇆ ON

Table 2.4 (2/6) Technial Functions

T.F. No.	Name of Function	The Display Shows
13	High-speed modem rate	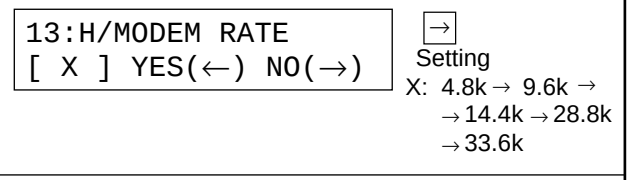
14	T1 (TX), timeout value (XTTO value)	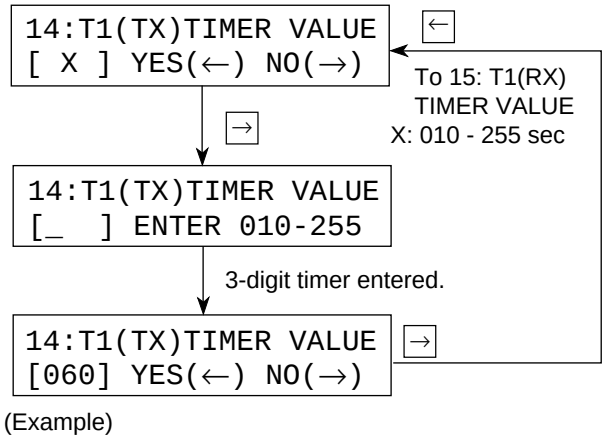 (Example)
15	T1 (RX), timeout value	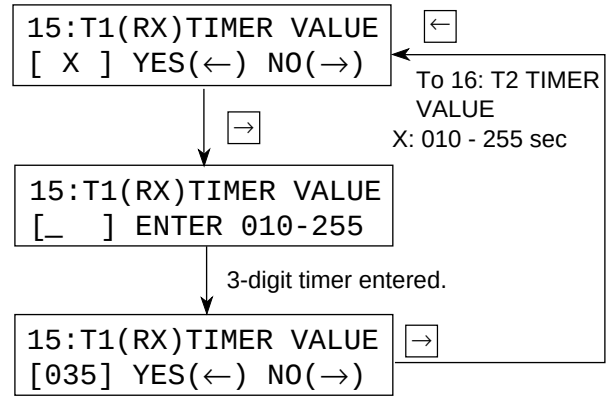 (Example)
16	T2, timeout value	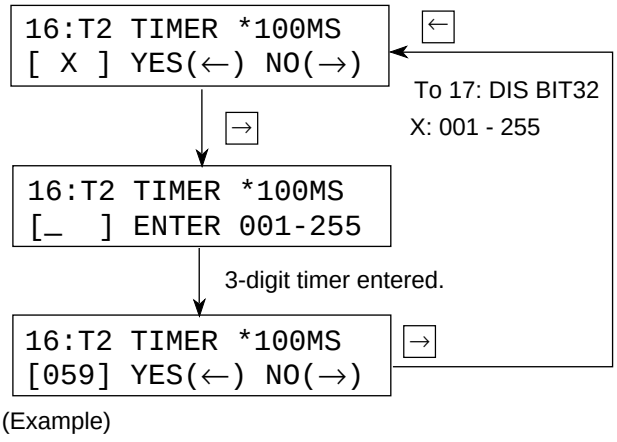 (Example)
17	DIS bit 32	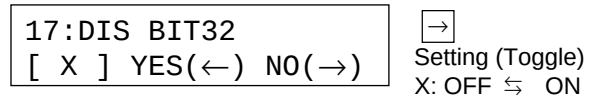

Table 2.4 (3/6) Technial Functions

T.F. No.	Name of Function	The Display Shows
18	Error criterion	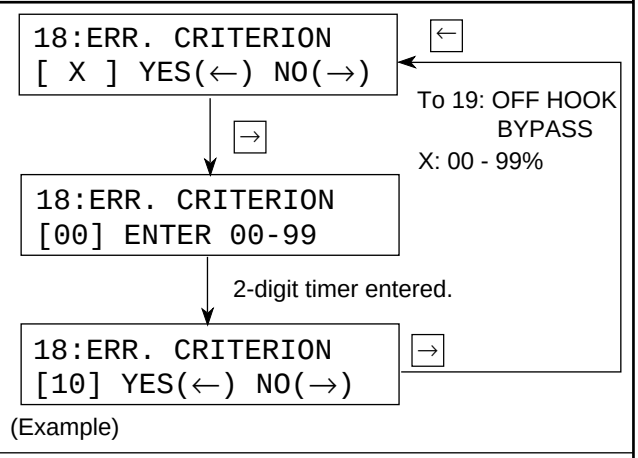 (Example)
19	Off-hook bypass	19:OFF HOOK BYPASS [X] YES(←) NO(→) → Setting (Toggle) X: OFF ⇆ ON
20	NL equalizer	20:NL EQUALIZER [X] YES(←) NO(→) → Setting X:0 KM→ 1.8 KM→ → 3.6 KM → 7.2 KM →0 KM
21	Modem attenuator	21:ATTENUATOR [X] YES(←) NO(→) → Setting X:0 DB → 1 DB → 2 DB →····· →15 DB → 0 DB →••••
22	T/F tone attenuator (for TEL/FAX switch)	22:T/F TONE ATT. [X] YES(←) NO(→) → Setting X:0 DB → 1 DB → 2 DB →····· →15 DB → 0 DB →••••
23	MF attenuator	23:MF ATT. [X] YES(←) NO(→) → Setting X:0 DB → 1 DB → 2 DB →····· →15 DB → 0 DB →••••

Table 2.4 (4/6) Technial Functions

T.F. No.	Name of Function	The Display Shows
24	Ring duration detection time	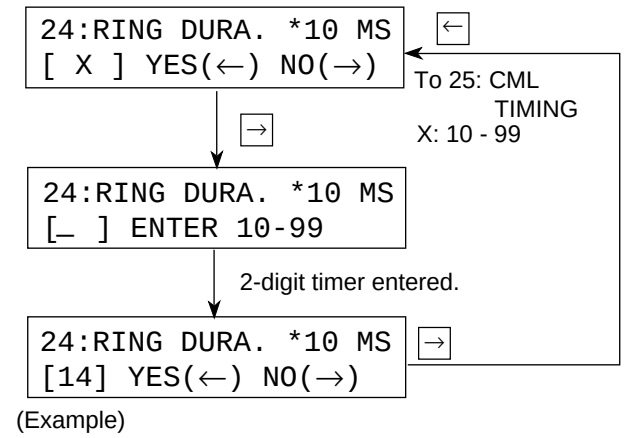 (Example)
25	CML timing	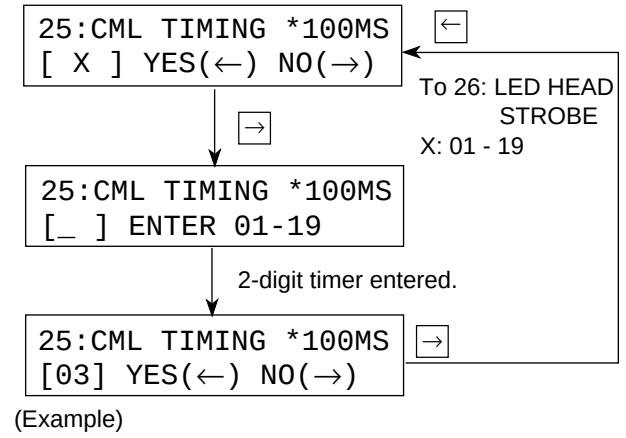 (Example)
26	LED Head strobe	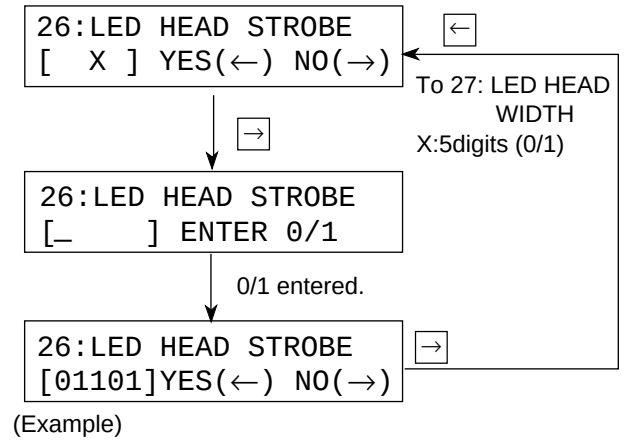 (Example)
27	Media type	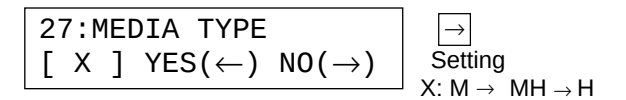
28	Transfer roller clatch current	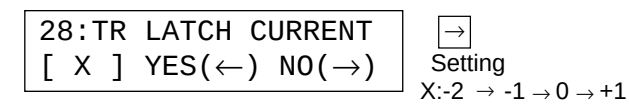
29	NSF switch	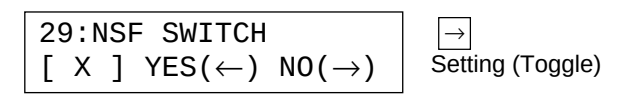

Table 2.4 (5/6) Technial Functions

T.F. No.	Name of Function	The Display Shows
30	ID/TSI priority	30:ID/TSI PRIORITY [X] YES(←) NO(→) [→] Setting (Toggle) X: ID ⇆ TSI
31	Toner count clear	31:TONER COUNT CLEAR [X] YES(←) NO(→) [→] Setting (Toggle) X: OFF ⇆ ON
32	Parallel Pick Up	32:PARALLEL PICK UP [X] YES(←) NO(→) [→] Setting (Toggle) X: OFF ⇆ ON
33	V.34 TX retry	33:V.34 TX RETRY [X] YES(←) NO(→) [→] Setting (Toggle) X: OFF ⇆ ON
34	Symbol rate	34:SYMBOL RATE [X] YES(←) NO(→) [→] Setting (Toggle) X: 2400 → 2800 → 3200 → 3429
35	Leased line	35:LEASED LINE [X] YES(←) NO(→) [→] Setting (Toggle) X: OFF ⇆ ON
36	CED send	36:CED SEND [X] YES(←) NO(→) [→] Setting (Toggle) X: OFF ⇆ ON
37	Fax2Net Function	37:FAX2NET FUNCTION [X] YES(←) NO(→) ***Note 4*** [→] Setting (Toggle) X: OFF ⇆ ON
38	Top feed	38:TOP FEED [X] YES(←) NO(→) [→] Setting X: 1→ 2 → 3•••9 → -1 → -2 → -3•••-10 → 0
39	Bottom feed	39:BOTTOM FEED [X] YES(←) NO(→) [→] Setting X: 1→ 2 → 3•••10→ -1 → -2 → -3•••0 → -2
40	G3/G4 learning	40:G3/G4 LEARNING [X] YES(←) NO(→) ***Note 5*** [→] Setting (Toggle) X: OFF ⇆ ON
41	LLC check (Lower layer compatibility information)	41:LLC CHECK [X] YES(←) NO(→) ***Note 5*** [→] Setting (Toggle) X: OFF ⇆ ON

Table 2.4 (6/6) Technial Functions

T.F. No.	Name of Function	The Display Shows
42	G3 setup BC	***Note 5*** 42:G3 SETUP BC [X] YES(←) NO(→) [→] Setting (Toggle) X: OFF ⇆ ON
43	G3 Fallback cause	***Note 5*** ***Note 6*** 43:G3 FALLBACK CAUSE [BA01] YES(←) NO(→) → key 43:G3 FALLBACK CAUSE [*BA01] YES(←) NO(→) ← key ← key 43:G3 FALLBACK CAUSE [BA02] YES(←) NO(→) ← key 43:G3 FALLBACK CAUSE [BB07] YES(←) NO(→) ← key FUNCTION NUMBER [_] ENTER 01-43

Note 1: • At change of country code, forcibly set the distinctive ring to off.
• If the attenutor set value is 0 to 6dB at change to FRE, forcibly change to 7dB.

2: When this setting is set to off in TAD mode, forcibly change to FAX mode.

3: When this setting is set to off in T/F mode, forcibly change to FAX mode.

4: • This setting is impossible when there is a Fax2Net communication queue.
• Warning message "ILLEGAL OPERATION" is displayed by pressing the ∅ key.

5: Changed only when G4 opt. mounted.

6: • 54 types of service codes are displayed in order by pressing the ♦ key. (See G3 fallback service code list)
• Use the ∅ key to change whether G3 fallback is targeted.
• An asterisk * just before the service code is performed by G3 fallback.
• The set values selected until now are valid even when the STOP key is pressed during processing.

Table 2.5 G3 Fallback Object Service Code List (If G4 TX is faulty)

Classification	Code	Description	Remarks
Dch layer 3	BA01	Unallocated (unassigned) number	*
	BA02	No route to specified transit network	*
	BA03	No route to destination	*
	BA06	Channel unacceptable	*
	BA07	Call awarded and being delivered in an established channel	*
	BA10	Procedure sequence error, Line disconnected during in-band procedure	*
	BA11	User busy	Handling of the redial
	BA12	No user responding	*
	BA13	No answer from user (user alerted)	*
	BA15	Call rejected	*
	BA16	Number changed	*
	BA1A	Non-selected user clearing	*
	BA1B	Destination out of order	*
	BA1C	Invalid number format	*
	BA1D	Facility rejected	*
	BA1E	Response to STATUS-ENQUIRY	*
	BA1F	Normal, unspecified	*
	BA22	No circuit/channel available	Handling of the redial
	BA26	Network out of order	*
	BA29	Temporary failure	Handling of the redial
	BA2A	Switching equipment congestion	*
	BA2B	Access information discarded	*
	BA2C	Requested circuit/channel not available	Handling of the redial
	BA2F	Resources unavailable, unspecified	*
	BA31	Quality of service unavailable	*
	BA32	Requested facility not subscribed	*
	BA39	Bearer capability not authorized	*
	BA3A	Bearer capability not presently available	*
	BA3F	Service or option not available, unspecified	*
	BA41	Bearer capability not implemented	*
	BA42	Channel type not implemented	*
	BA45	Requested facility not implemented	*
	BA46	Only restricted digital information bearer capability is available	*
	BA4F	Service or option not implemented, unspecified	*
	BA51	Invalid call reference value	*
	BA52	Identified channel does not exist	*
	BA53	A suspended call exists, but this call identity does not	*
	BA54	Call identity in use	*
	BA55	No call suspended	*
	BA56	Call having the requested call identity has been cleared	*
	BA58	Incompatible destination	*
	BA5B	Invalid transit network selection	*
	BA5F	Invalid message, unspecified	*
	BA60	Mandatory information element is missing	*
	BA61	Message type non-existent or not implemented	*
	BA62	Message not compatible with call state or message type non-existent or not implemented	*
	BA63	Information element non-existent or not implemented	*
	BA64	Invalid information element contents	*
	BA65	Message not compatible with call state	*
	BA66	Recovery on timer expiry	*
	BA6F	Protocol error, unspecified	*
	BA7F	Interworking, unspecified	*
	BB01	CONN message wait time out	*
	BB07	Reset request by network	

All service code can be selected by G3 Fallback cause (Technical function: No. 43)

2.2.1.4 User's Functions

This section explains the items usually set up by general users.

Table 2.6 shows the initial setting items and their purposes.

Each F.P.can be accessed by entering the corresponding function number on Function Programming.

The detailed procedure of the initial setting items will be explained on the following pages.

Note: S-ON: Effective if the service bit has been set on.
FP: Function program setting
TF: Technical function setting

1) User's Functions

Table 2.6 (1/6) User's Functions

No.	Item	Specifications
1	Auto dial 1) One-touch dial	40 one-touch keys are provided. Max. 40 digits for each location number. ID (Max 15 digits) In addition to an ordinary location number, another alternate location number can be registered in to each one-touch key. Purposes of this alternate location number: 1) Fax dial A fax number is registered as an alternate location number. When a call to the first location number is not answered, the alternate location number will be automatically dialled. (1) TEL No. Registration ***Note 1:*** If the telephone number is only registered, data can be registered in OT without registering ID and communication parameters. ***2:*** When TEL No. is registered for E-mail or Web-Url-registered one-touch, E-mail or Web Url is deleted. ***3:*** At registration, the following areas are initialized. (However, they are not initialized at entry of the same number.) • Redial/ Communication parameters/Learning parameters (2) E-mail registered • Set the caps mode to OFF at start of registration. ***Note 1:*** If an E-mail address is registered for TEL No. or Web-Url-registered one-touch, the TEL No. or Web Url is deleted. ***2:*** Maximum number of entered digits: 64 ***3:*** When E-mail is already registered for the OKIFAX 5650, even if the account No. is deleted, the registered contents are stored. (E-mail is recovered by entering the account No. again.) ***4:*** At registration, the following areas are initialized. (They are not initialized at entry to the same destination.) • Redial/ Communication parameters/Learning parameters

Table 2.6 (2/6) User's Functions

No.	Item	Specifications
		(3) Web Url registered • Set the Caps mode to OFF at start of registration. • "http://" cannot be edited. Excluding these characters, 64 characters can be registered. ***Note 1:*** When Web Url is registered for TEL No. or E-mail-registered one-touch, TEL No. or E-mail is deleted. ***2:*** The Web-Url-registered one-touch cannot be group-registered. ***3:*** When Web Url is registered in a one-touch in a group, the one-touch is deleted from the group destination. ***4:*** Since the OKIFAX 5650 is already registered in Web Url, the registered contents are stored even if the account number is deleted. (Web Url is recovered by entering an account number again.) ***5:*** At registration, the following areas are initialized. (They are not initialized at input to the same destination.) • Redial/Communication parameters/Learning parameters (4) E-Mail/Web Registration in OT by PC/RMCS • E-mail and Web can be registered in the OT area by PC/RMCS. • One of Tel, E-mail, and Web can be registered in the OT area. (Example: When Fax is already registered, if E-mail is registered, Tel is erased.) • When E-mail or Web is already registered, even if the account No. is deleted, the registered contents are held. (The E-mail or Web is recovered by entering the account No. again.) • To register Tel, E-mail, or Web, initialize each of the redial, communication parameter, and learning parameter areas.
	2) Three-digit dial	150 different codes are provided. *Three-digit location code: 001 to 150 Max. 40 digits for each location number. ***Note 1:*** If a telephone number is registered, data can be registered without registering ID and communication parameters. ***2:*** E-mail or Web cannot be registered in abbreviated dials. ***3:*** At registration, the following areas are initialized. (However, they are not initialized at entry of the same number.) • Redial/ Communication parameters/Learning parameters
	3) Keypad dial	With ten-key pad. Max. 40 digits for one operation

Table 2.6 (3/6) User's Functions

No.	Item	Specifications
	4) Chain dial	The number of dialling digits can be expanded to longer digit numbers by chaining any number of the above 1), 2) and 3).
	5) Mixed dial	Type of dialling can be changed from pulse dial to tone dial halfway in dialling process. The changing point is specified by the * key. This feature is not available in all countries.
2	Manual dial	With a telephone handset.
3	Receive mode 1) Auto receive mode	Selectable by key operation.
	2) Manual receive mode	Selectable by key operation.
	3) Telephone/fax automatic switchover	Selectable by key operation. The fax recognizes a fax call from a verbal call as follows: If the fax detects a call with a CNG signal, it starts an automatic document receive operation. If it detects a call without a CNG signal, it sounds the buzzer to indicate a voice call. Operator can answer the call by lifting the telephone handset. If he or she does not lift the handset within predetermined time (20 sec. or 35 sec.), the fax automatically starts a document receive operation. *FP + 10 (To determine the timer.) ***Note:*** Refer to TEL/FAX automatic switching and flow chart.
4	Automatic redial	PTT parameter setting disables or enables this feature, and specifies redial times and redial intervals. *See 2.2.1.9 for the service bit condition depending on PTT parameters.
5	Last No. redial	"REDIAL" key is provided. There is no limit on number of repeat attempts. If machine is in Power Save mode (not available for ODA version) manual redial with REDIAL key is not possible.
6	Group dial	• 20 dialling groups Max. 190 locations Grouping some one-touch keys and some three-digit auto dial codes to which telephone numbers have been assigned. This group setting makes broadcast operation simple. 1) OT for E-mail registration can be mixed with OT/AD for Tel No. registration; however, Web URL cannot be registered. 2) OT for Web Url registration cannot be specified. 3) When no account No. is registered at FaxNet function = OFF or Fax2Net Function = ON, OT for E-mail registration cannot be specified.

Table 2.6 (4/6) User's Functions

No.	Item	Specifications
		4) Search processing by the SEARCH key is performed. • OT for Tel or E-mail registration is searched in the Fax2Net enabled state. (OT for Web Url registration is not a search target.) • OT for Tel registration is only search-targeted in Fax2Net disabled state (3) above). 5) After OT for E-mail registration is registered in a group at registration of an account No., if the account No. is erased, all OTs for E-mail registration registered in the group are erased. 6) Same as above at registration by PC or RMCS
7	Telephone directory and location ID (Alpha search)	In addition to fax numbers, an alpha/ numeric name can be assigned to each of one-touch keys and two/three-digit dial codes, 001 to 150. Any location ID can be searched and displayed on LCD. Then direct dialling to the ID's station can be performed. There are two methods of searching: (1) Search based on the first character specified. (2) Searching by displaying all registered location IDs one after another in the lexicographical order. Location ID: Max. 15 characters
8	Local copy	Printing resolution: Horizontal: 300 dpi (Fine, EX Fine), 200 dpi (SDT) Vertical: 3.85 (STD), 7.7 (Fine) or 15.4 line/mm (EX Fine)
9	Multiple local copy	Up to 99 copies.
10	Manual loading feeder	One single sheet from the feeder above the first recording paper cassette can be copied. Example of sheets: Transparency for an overhead projector
11	Broadcast (Memory transmission)	Max. 200 remote locations can be specified by the following means: • One-touch keys (with of without a group list). • Three-digit auto dial codes. • 10 keypad dial number (Max.) One delayed time of calling for this feature can be specified unless any other delayed calling feature has been specified. The combination of 20 delayed broadcast and one immediate calling of broadcast is possible. However, the setting of delayed transmission and delayed broadcast must not exceed the total number of specified time which is different according to the machine. When multiple locations are specified for one broadcast (1) The fax prints a broadcast entry report, if specified in operating sequence. (2) The fax can print a broadcast confirmation report. (FP + 02 To enable or disable this printout)

Table 2.6 (5/6) User's Functions

No.	Item	Specifications
12	Delayed transmission from the memory	The fax can automatically transmit documents at 20 specified times from the memory.
13	Polling transmission (To be polled)	Document(s) placed on the feeder can be collected by a remote station.
14	Polling reception	The fax can collect documents from one remote station.
15	Bulletin polling	A kind of polling transmission. Bulletin polling enables polling transmission many times until deleting the documents stored in the memory.
16	Transmission preparation (Hopper)	An operator can prepare documents for transmission even while the fax is enagaged in message reception. They will be automatically transmitted upon completion of the reception. An operator can also prepare documents for transmission during transmission from memory.
17	No toner reception	The fax can temporarily store received messages in memory when toner has run out. The messages are printed when toner has been newly supplied or an operator presses the SELECT FUNCTION key followed by the one-touch key No. 2 under the LCD message "PRINT MEMORY MSG." in the standby mode. *FP + 22 (To enable or disable this function)
18	Smooth printing	The documents received in the STD mode can be printed at the FINE resolution by means of generating one line based on the two consecutive original lines and printing it between them.
19	Dual Access	The documents for transmission can be read into the memory even while the fax is engaged in another memory transmission, reception in the ECM or non-ECM mode. 1) Operation of memory transmission while the fax is engaged in a communication (memory TX, memory RX or print mode RX). 2) Copy while the fax is engaged in a communication (memory TX or memory RX). ***Note:*** Condition for operation a) Copy is invalid when the machine is already engaged in an operation which is using or could use the printer. 3) Call reception while the fax is engaged in scanning documents for memory transmission when the auto receive mode is in "FAX" or "T/F" mode, although "TEL" mode is not valid. Refer to sub-section 2.2.1.7 for dual access operation. For the patterns of dual access refer to the following, Dual Access Combination Table.

Table 2.6 (6/6) User's Functions

No.	Item	Specifications

Dual Access Combination Table

1'st \ 2'nd		PC1 ON				
		Reception	Prefeed	Remote input display	Preparation TX	Scanning to Memory
ON HOOK	Standby	◯	◯	◯	◯	◯
	During FAX Calling	×	◯	×	×	◯
Call Reception	During RING RESPONSE	×	◯	◯	◯	◯
	During detection of TEL/FAX	×	◯	×	×	×
	During TAD detection	×	◯	×	×	×
	1st Phase B	×	◯	◯	◯	◯
Feeder TX	Calling ~ Transmission	×	×	×	×	◯
	Transmission after scanning	×	◯	◯	◯	◯
Memory TX	During Scanning	◯	×	×	×	◯
	Dialling and Calling	×	◯	◯	◯	◯
	During TX	×	◯	◯	◯	◯
Polling RX	Dialling and Calling	×	◯	◯	◯	◯
Memory RX		×	◯	◯	◯	◯
Paper RX	Reception and print	×	◯	◯	◯	◯
	Residual Print Processing	◯	◯	◯	◯	◯
	Memory reception	×	◯	◯	◯	◯
During voice request is initiated.		×	◯	×	×	×
During copy		◯	◯	×	×	×
During automatic printing of received messages		◯	◯	◯	◯	◯
During automatic printing of reports		◯	◯	◯	◯	◯
During operation		×	◯	×	×	×

* Operation during communication is not determined yet.

<Note> ◯: Available, ×: Not available

20	Voice request	A voice request from the transmitter is available only upon completion of the total message transmission. A voice request from the receiver is available at the end of each page being received.

2) User's Initial Settings

Note: The fonts displayed on the LCD operation panel may differ from fonts written this manual.

2)-1 One Touch Key Operations

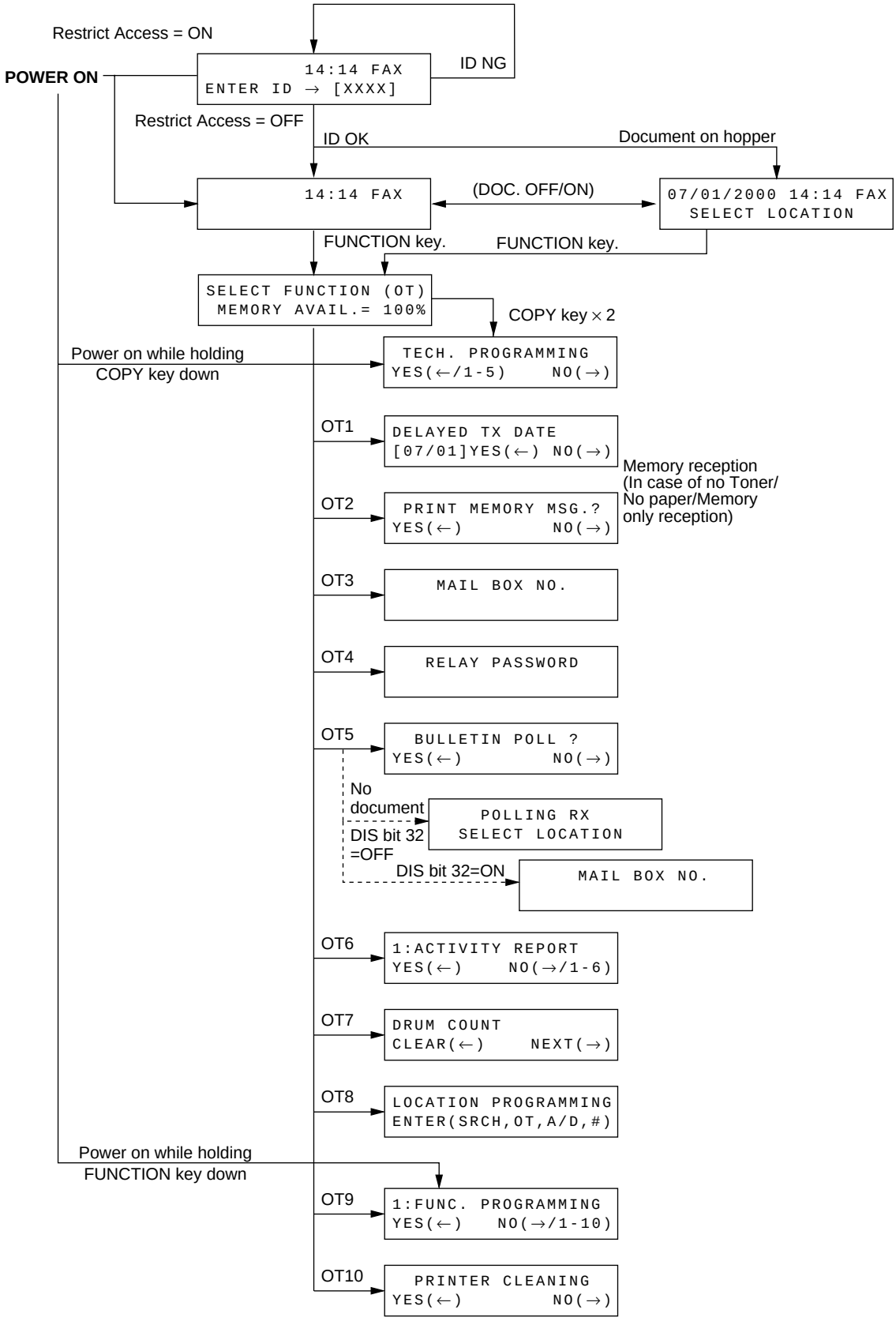

Note: OT2, OT6 - OT10 are invalid during PC printing.

Table 2.7 (1/6) User's Initial Settings (One-touch key Program)

F+OT No.	Item	Specifications
1	Delayed transmission (TX)	This function enters a message transmission time(s) and location(s) for execution at a specified time.20 specified times can be registered (within 3 days.)
2	Print from Message in Memory (Print Memory MSG.)	To print out the received messages from memory in "MSG. IN MEMORY" mode, or when the machine has run out of recording paper (including the door open and no toner state). When received messages are in the memory. "MSM. IN MEMORY" is indicated on the LCD. When printing in the Memory Only Reception, an operator has to print the received message by the Memory message printing operation.
	Print from Confidential Reception Message (Print Personal Box)	To print out the confidential received messages in the memory with 2-digit personal box number. The maximum number of personal boxes is 16. Personal boxes are numbered 01 to 16. When confidential received messages are in the memory, "MESSAGE IN MEMORY" is indicated on the LCD.
3	Confidential transmission	This function transmits a Confidential-marked message to any one of 64 predesignated mailboxes provided in a distant machines. To program the mail box number 01 to 64. Available remote station's mail box numbers: OKIFAX 2400/2600: 01 to 40 OKIFAX 1000: 01 to 16 OKIFAX 2300/OF-18/OF-150: 01 to 16 OKIFAX 38/OF-27: 01 to 64 OKIFAX 2350/1050: 01 to 08 OKIFAX 2450: 01 to 08 OKIFAX 5200/5300: 01 to 08 OKIFAX 5500/5600: 01 to 16 OKIFAX 5700/5900: 01 to 16 OKIFAX 5750/5950: 01 to 16 OKIOFFICE84/OKIFAX 4500: 01 to 08 OKIFAX 4550/OKIFAX4550 ISDN: 01 to 08 OKIFAX 5650 01 to 16
4	Relay broadcast initiate transmission	This function automatically originates a message call via relay key station (which must be equipped with OKIFAX 2600, OF-38, OF-27, OKIFAX 5950 or equivalent) up to 120 locations for OKIFAX 2600 and 99 locations for OF-38 or OF-27. To program relay password. To enable or disable the relay report. When auto dial code number 150 is not assigned, relay broadcast report is not transmitted. When it is assigned, relay report is transmitted to fax number assigned to auto dial code 150.
5	Polling transmission/reception	Polling TX: The documents placed on the feeder can be collected by a remote station. Bulletin polling: A kind of polling transmission. Bulletin polling enables polling transmission many times until deleting the documents from one remote station. Polling RX: The fax can collect documents from one remote station.

Table 2.7 (2/6) User's Initial Settings (One-touch key Program)

F+OT No.	Item	Specifications
6	Report printing	The report print in 6 items are as follows: 1. Activity report 2. Broadcast message confirmation report (Multi location) 3. Activity memory files report 4. Phone directory report 5. Configuration list without service default (Service default report if service bit sets to ON.) 6. Protocol dump list 7. Log report (Set to on Service bit) 8. G4 Log. report (Operatable only at G4 opt. & Service Bit = ON) *Refer to Reports and Lists of Chapter 1.
7	Selection of Counter display	The operation for displaying and clearing the print counters in five ways are as follows: 1. Drum counter When I/D unit reaches run-out time, “CHANGE DRUM SOON” is appeared in LCD. Under above condition, user can see the Drum message and clear. However, No. of counter is not shown for user (Service bit=OFF). After user changed the Drum and clear operation, “CHANGE DRUM SOON” in LCD is displayed. However, the drum counter clear is possible even if the drum is not at the end of its lifespan. 2. Toner counter This counter provided to serviceman to check the number of toner counter. When srvice bit=OFF, this counter message is skipped. When service bit=ON, this counter is cleared by operation. When TF31=ON, this counter is cleared by operation without Service bit ON/OFF (TF01). (User can clear the toner counter.) 3. Drum (T) counter This counter to serviceman to know the total number of DRUM counter for the machine. When service bit=OFF, this counter message is skipped. When service bit=ON, this counter is cleared by operation. 4. Print counter This counter is provided to user. Display shows how many times recording paper has been printed. But user cannot clear this number. 5. Scan counter This counter is provided to user. Display shows how many times document has been passed the ADF. But user cannot clear this number.

Table 2.7 (3/6) User's Initial Settings (One-touch key Program)

F+OT No.	Item	Specifications
8	Location program	
	1) One-touch key	One-touch keys allow registering: (1) Telephone number (numeral, -, P and space) in 40 digits. (2) Alternate fax telephone number in 40 digits. (additional registration) (3) ID for the telephone directory function in 15 characters (alphabetic, numeric and symbolic). (4) 40 one-touch keys are provided.
	2) Three-digit auto dial program	Auto-dial No. 001 to 150 allows registering telephone number in 32 digits (numeral, -, P and space) and ID for the telephone directory maximum 15 characters (alphabetic, numeric and symbolic).
	3) Group setting	Grouping some one-touch keys and some two-digit auto dial codes to which telephone numbers have been assigned. 20 group programming are available. The group programming makes multiple polling reception and broadcast operation simple.
9	User's programs	
	1) Function program	01: MCF (SINGLE-LOC.) 02: MCF (MULTI-LOC.) 03: ERR. REPORT (MCF.) 04: IMAGE IN MCF. 05: SENDER ID 06: MONITOR VOLUME 07: BUZZER VOLUME 08: CLOSED NETWORK 09: TX MODE DEFAULT 10: T/F TIMER PRG. 11: RING RESPONSE 12: DISTINCTIVE RING 13: PAPER SIZE 14: USER LANGUAGE 15: INCOMING RING 16: REMOTE RECEIVE 17: MEM./FEEDER SW. 18: POWER SAVE MODE 19: ECM FUNCTION 20: REMOTE DIAGNOSIS 21: PC/FAX SWITCH 22: NO TONER MEM RX 23: MEM FULL SAVE 24: CONTINUOUS TONE 25: INSTANT DIALING 26: RESTRICTED ACCESS 27: WIDTH REDUCTION 28: TONER SAVE 29: CNG COUNT 30: ISDN DIAL MODE 31: SPEECH RECEIVE Refer to Table 2.7 for specification of the function programs No. 01 through 31.

Table 2.7 (4/6) User's Initial Settings (One-touch key Program)

F+OT No.	Item	Specifications
	2) Dial parameters	1. REDIAL TRIES 2. REDIAL INTERVAL 3. DIAL TONE DETECT 4. BUSY TONE DETECT 5. MF (TONE)/DP (PULSE) 6. PULSE DIAL RATE 7. PULSE MAKE RATIO 8. PULSE DIAL TYPE 9. MF(TONE) DURATION 10. PBX LINE 11. FLASH/EARTH/NORMAL 12. AUTO START 13. DIAL PREFIX Refer to Table 2.6 and 2.2.1.9 for specification of dial parameter settings.
	3) Clock adjustment	Date and time adjustment. ***Note:*** Data outside 1996 to 2095 cannot be registered.
	4) System data program	(1) TSI/CSI (except for SUI and AUT) Registration of TSI/CSI/CIG (numbers, + and space) in 20 digits. TSI: Transmitting Subscriber Identification CSI: Called Subscriber Identification CIG: Calling Subscriber Identification (2) SENDER ID Registration of sender ID (alphabetic, numeric and symbolic) in 32 digits. (3) CALL BACK NO. Registration of telephone number for call-back message (alphabetic, numeric and symbolic) in 20 digits. ***Note:*** When 16 digits or more is registered, the high-order 16 digits are displayed. (TSI, CSI, ID or CBM)
	5) Personal box programming	To allow the operator (in this case, a person who wishes to assign a password to personal box) to assign a two functions to 16 personal-box. (a) Confidential RX (b) Bulletin Polling TX Used with confidential RX and Bulletin polling TX and Advanced T30 protocol. Personal box setting for Bulletin poll using SEP frame and Confidential using SUB frame when remote machine has a SEP/SUB capability. The box No.0 is used for only global Bulletin Polling TX.
	6) Forwarding number programming	Specify the destination of forwarding for incoming call. Ahen the transfer destination telephone number is set, forwarding can be specified. The message is first received in the memory and when this reception is completed, the fax automatically transfers the message to one designated location. 1) Number of forwarding for incoming call destination that can be specified. OKIFAX 5650: 1 2) Number of characters used to specify a destination. 40 characters (numeral, -, P and Space).

Table 2.7 (5/6) User's Initial Settings (One-touch key Program)

F+OT No.	Item	Specifications
	7) Memory password programming	Registering the password required (4-digit numerals) for outputting the data received by Memory Only Reception mode or change from Memory Only Reception mode. When the four-digit numeric password is registered. The password input is required upon outputting documents or change from Memory Only reception mode.
	8) FAX Network Programming	The Incorporation of the FAX2NET function requires the following registration operation: 1) FAX 2NET server telephone number: Telephone number of the FAX2NET server to be used (Max 40 digits). 2) Account number: ID particular to terminal registered in FAX2NET service. The user must fetch this number individually from FAX2NET. Up to 14 characters including. 3) International telephone prefix (10-digit max.): Number required to decide whether the FAX2NET service should be started. * Only when Fax2Net Function = ON. See FX-060 product specification "FAX2NET Function".
	9) FAX2NET Service	The following FAX2NET services are avilable. 1) Web Retrieval Web Retrieval is a function available for a Web printing request to FAX2NET server by using a Web URL the assigned to one-touch key. The FAX2NET server facsimile-sends its data to the request source. This is performed in normal G3 communication mode. 2) Broadcasting Groups can be registered in the Fax2Net server. By specifying the group at the facsimile, the Fax2Net server transmits the image to the respective destinations that are in that group. 3) Prepaid Card Registration Prepaid card registration is a function available for the prepaid card information to the FAX2NET server by inputting the card number from the user menu. *Only when Fax2Net Function = ON. See FX-060 product specification "FAX2NET Function".
	*. Restrict ID programming	Restrict ID is a function available only person who knows Password, and this function can register 24 types of ID (Department No.) when Restrict Access of user's setting No. 26 is set to ON. *Only when Restrict Access = ON.

Table 2.7 (6/6) User's Initial Settings (One-touch key Program)

F+OT No.	Item	Specifications
	#. ISDN programming	Sets to Country code, ISDN No. (subscriber number), ISDN ID (subscriber code) and ISDN sub address. 1) Setting values This setting consists of the following: • Country code: 3 characters (digits only) • ISDN No. (subscriber number): 20 characters (digits only) • ISDN ID (subscriber code): 10 characters (alphabetic characters, lowercase characters) Handling in G3 mode Handling in G4 mode Not used Switching in standard procedure. User for location display. Used for TSI/CIL printing. ISDN No.used for collating closed area communication. In case of origination, the ISDN number if used for reporting the calling subscriber number, it is reported to the network. In case of termination, the ISDN number is used for MSN collation. • ISDN sub address: 19 characters (digits only) Handling in G3 mode Handling in G4 mode Used for sub collation. ***Note 1:*** This setting can be made when G4 option is mounted. ***2:*** The setting data must be transferred to the G4 board.
10	Printer cleaning	This drum cleaning function removes the residual toner on the I/D (image drum) Unit surface by printing.

Table 2.8 (1/5) User's Initial Settings (Function Program)

P.F. No.	Item	Specifications	Default
01	Message confirmation report (Single location)	Enables or disables the automatic message confirmation report printing after a single location call. ON : Printing the MCF report. OFF : Disables this function.	
02	Message confirmation report (Multiple locations)	Enables or disables the automatic message confirmation report printing after a multiple polling or broadcast. ON : Prints the MCF report. OFF : Disables this function.	
03	Error report (MCF)	Enables or disables the automatic error report printing when transmission error occurs. (Excepts for service bit “0”.) ON : Printing the error report. OFF : Disables this function.	
04	Image in MCF	Enables or disables the automatic printing of the image on the first sheet below the message confirmation report. ON : Printing the image in MCF report. (Memory transmission and if the report is printed automatically.) OFF : Disables this function.	
05	Sender ID	The fax can transmit programmed alphanumeric message, such as company’s name consisting of up to 32 characters. Enables or disables the sender ID function. *(Outside only) ON : Enables OFF : Disables	
06	Monitor Volume	Controls the volume. OFF/Low/Mid./H-Mid./High selectable.	
07	Buzzer volume	Selects the sound volume of each buzzer (end of communication buzzer, voice request buzzer and off-hook alarm) and software ringer from high, low and middle levels. Low/Mid/High selectable. ***Note:*** Fixed a low level for key touch tone.	

Table 2.8 (2/5) User's Initial Settings (Function Program)

P.F. No.	Item	Specifications	Default
08	Closed network	The fax compares lower four digits of TSI/CSI received from remote station with fax numbers registered locally for one-touch dial and two-digits autodial. If unmatched, the communication will be automatically disconnected. OFF/RX only/TX and RX selectable. *Prevention of direct mail or wrong number calls. (Reference) TSI : Transmitting subscriber identification CSI : Called subscriber identification	
09	TX mode default	Selects automatically the mode set up when a document is loaded on the feeder. The following combinations are selectable. STD/NORMAL∅STD/DARK∅STD/LIGHT∅ FINE/NORMAL∅FINE/DARK∅FINE/LIGHT∅ EX.FINE/NORMAL∅EX.FINE/DARK∅ EX.FINE/LIGHT∅PHOTO/NORMAL∅ PHOTO/DARK∅PHOTO/LIGHT∅ STD/NORMAL∅ • • •	
10	Telephone/fax automatic switchover time	Specifies the time for which the fax alerts an operator on reception of a call in the telephone/fax automatic swichover mode. 20 sec./35 sec. selectable Refer to TEL/FAX automatic switching and flow chart.	
11	Ring response time	User can register ring response time if National code is: INT'L, GBR, NOR, SWE, USA, HOL, ESP, ITA, GRE or GER Selects the ring response time. 1 ring/5/10/15/20 sec. selectable.	
12	Distinct ring	Specifies the detected distinct ring. (not available in all countries) OFF/ON/SET selectable.	
13	Paper size	Selects A4, LETTER or LEGAL 13˜, LEGAL 14˜, EXEC., A5, A6, JISB5 by this function. The operator must select the preferable paper size as the machine cannot detect the paper size automatically. ***Note:*** EXEC., A5 or A6 message appears when operating with MFP terminal.	

Table 2.8 (3/5) User's Initial Settings (Function Program)

P.F. No.	Item	Specifications	Default
14	User language	A choice of 2 languages for LCD and print message are available. GER, FRE etc. are displayed insted of OTHER. ENGLI/OTHER selectable.	
15	Incoming ring	Instead of ringer circuit, software can control built-in speaker to ring sound. To enable (ON) or disable (OFF) or distinctive ring (DRC) a software generated ring sound to indicate arrival of an incoming bell.	
16	Remote receive	This function is used to transfer a call received by an external telephone set (connected to fax) by entering two-digit MF tones if the remote receive setting is not OFF The following combinations are selectable. 00/11/22/33/44/55/66/77/88/99/**/##/OFF selectable. ***Note:*** Parallel pick-up control inhibited when this is set to OFF.	
17	Memory and feeder switch	Switches the transmission mode between the memory and feeder. MEM. TX/FEEDER TX selectable. ***Note:*** This function becomes effective when Instant Dial of No. 25 is set to OFF.	
18	Power save mode	The power supply will be fed to all circuits of a fax machine whenever the fax goes to the operating state. The power save mode has reduced the power consumption at standby to below 0.5 W. ***Note:*** Power save mode is not available for ODA version. (including LTA, MEX) Pre-heating time (Standby to print): Approx 30 sec Eanbles or disables power save mode ON : Enables OFF : Disables	
19	ECM function	Enables or disables ECM (error corection mode) communication. ON : Enables OFF : Disables	
20	Remote diagnosis	Enables or disables the remote diagnosis function when the machine can allow remote diagnosis from remote center. ON : Enables OFF : Disables	

Table 2.8 (4/5) User's Initial Settings (Function Program)

P.F. No.	Item	Specifications	Default
21	PC/FAX switch	To enable or disable PC interface function. When PC reception is not available, for example, application is not activated on the PC or cable is missing between PC and fax etc., this setting allows to switch from PC to fax reception automatically. ON : Automatically change to fax reception OFF : No reception	
22	No toner memory reception (NO Toner MEM RX)	Enables or disables the memory reception when the fax is the toner low condition. ON : Receives the message in the memory reception when the fax is the toner low condition. The messages are printed when toner has been newly supplied. OFF : Prints the message even the remaining toner level is low or none. Print quality is not guaranteed.	
23	Memory full save (MEM Full Save)	Broadcast transmission and other features originate calls after all the document read in memory. When Memory Full occurs during reading documents and operator time out occur, all the readout data must be deleted (OFF setting) or all the data must be sent (ON setting). Select either ON or OFF setting as follows: ON : Selecting display OFF : Selecting delete at all times. ***Note:*** Operator timeout means operator does not respond during 59 seconds.	
24	Continuous Tone	Setting of sounding warning tone after reception. ON : Warning tone sounding stops by operator's STOP key pressing OFF : No warning tone	
25	Instant Dialing	Setting to start reading documents upon call origination when transmitting. ON : Dialing while document scanning OFF : Dialing after document scanning	
26	Restricted Access	Restricted Access limits accessible users by setting a password beforehand. Inputting the password then enables the user's access to the machine (FAX terminal). ON : Enables Restricted Access OFF : Disables	

Table 2.8 (5/5) User's Initial Settings (Function Program)

<table>
<tr><th>P.F. No.</th><th>Item</th><th>Specifications</th><th>Default</th></tr>
<tr><td>27</td><td>Width Reduction</td><td>This function can print characters written at the edges of a document.
Switches the reduction of the horizontal scanning direction.
ON : Reduction printing (216 mm to 203 mm)
Reduction rate is shown as below.
Copy
<table><tr><td></td><td>STD</td><td>Fine</td><td>EX Fine</td></tr><tr><td>A4 size</td><td>97.9%</td><td>97.5%</td><td>97.5%</td></tr><tr><td>Except A4 size</td><td>94.5%</td><td>95.0%</td><td>95.0%</td></tr></table>Reception message<table><tr><td>8 dot/mm</td><td>300 DPI</td></tr><tr><td>94.1%</td><td>92.6%</td></tr></table>OFF : 203 mm printing</td><td></td></tr>
<tr><td>28</td><td>Toner save</td><td>Determine whether toner saving is to be performed furing fax printing.
When a LAN/PC printer is used, this setting is ignored and the command from the host is executed.
1) Setting value
ON(Toner saving performed)/OFF(Toner saving is not performed)</td><td></td></tr>
<tr><td>29</td><td>CNG Count</td><td>When T/F, TAD, or Parallel pickup is operatimg in CNG signal detection processing, this setting can be shifted to the facsimile reception mode at the time of number of CNG signal detedction times are equal to the set values.
1) Seting values
1- 5 (in one-tray steps)
• Selection is skipped over when the ISDN board is mounted (sellection allowed if SERVICE BIT = ON).</td><td></td></tr>
<tr><td>30</td><td>ISDN Dial Mode</td><td>Determine whether G4 communication is to be performed by calling a signal remote machine by pressing ten-keys when an G4 option is mounted.
1) Setting values
G3 MODE(G3 communication)/G4(G4 communication)
• This setting cannot be made when an G4 option board is not provided.</td><td></td></tr>
<tr><td>31</td><td>Speech Receive</td><td>Determine whether the incoming call is answered when the information transmission capacity instracted by the network is voice transmission.
1) Setting values
ON(Answered)/OFF(Not answered)
• This setting cannot be made when G4 option board is not provided.</td><td></td></tr>
</table>

Table 2.9 (1/2) User Default Setting

No.	User Setting Items	Setting Selection	1 ODA	2 LTA	3 E-INT	4 E-GER	5 E-FRE	6 0-AUS	7 0-NZL	8 0-SIN	9 0-HNG	10 L-AG	10 IRL	11 DEN	13 SWE	Note
1	MCF (single-loc.)	ON/OFF	OFF	OFF	OFF	ON	OFF	OFF	ON	OFF	OFF	OFF	OFF	ON	OFF	
2	MCF (multi-loc.)	ON/OFF	ON	ON	OFF	ON	OFF	OFF	ON	OFF	OFF	OFF	OFF	ON	ON	
3	ERR.REPORT (MCF.)	ON/OFF	ON	ON	OFF	ON	OFF	ON	ON	ON	OFF	OFF	OFF	ON	ON	
4	IMAGE IN MCF.	ON/OFF	ON	ON	ON	ON	ON	ON	ON	ON	ON	ON	ON	ON	ON	
5	SENDER ID	ON/OFF	ON	ON	ON	ON	ON	ON	ON	ON	ON	ON	ON	ON	ON	
6	MONITOR VOLUME	OFF/LOW/HIGH	LOW	LOW	LOW	LOW	LOW	LOW	LOW	LOW	LOW	LOW	LOW	LOW	LOW	
7	BUZZER VOLUME	LOW/MID/HIGH	MID	MID	MID	MID	MID	MID	MID	MID	MID	MID	MID	LOW	MID	
8	CLOSED NETWORK	OFF/ T/R / RX	OFF	OFF	OFF	OFF	OFF	OFF	OFF	OFF	OFF	OFF	OFF	OFF	OFF	
9	TX MODE DEFAULT	STD/FINE/EX-FINE/PHOTO NORMAL/DARK/LIGHT	STD NOR	STD NOR	STD NOR	STD NOR	STD NOR	STD NOR	STD NOR	STD NOR	STD NOR	STD NOR	STD NOR	STD NOR	STD NOR	
10	T/F TIMER PRG.	20 sec/35 sec	35	35	20	35	20	35	35	35	35	20	20	20	20	
11	RING RESPONSE	1 ring/5 sec/10 sec/15 sec/20 sec	1 ring	1 ring	1 ring	1 ring	1 ring	1 ring	1 ring	1 ring	1 ring	1 ring	1ring	1 ring	1 ring	
12	DISTINCTIVE RING	OFF/ON/SET	OFF	OFF	OFF	OFF	OFF	OFF	OFF	OFF	OFF	OFF	OFF	OFF	OFF	
13	PAPER SIZE	1st Tray=A4/LET./LGL13/LGL14 /EXEC/A5/A6/JISB5	LET	LET	A4	A4	A4	A4	A4	A4	A4	A4	A4	A4	A4	
14	USER LANGUAGE	LNG1/LNG2	LNG1	LNG1	LNG1	LNG2	LNG2	LNG1	LNG1	LNG1	LNG1	LNG1	LNG1	LNG2	LNG2	
15	INCOMING RING	OFF/ON/DRC	ON	ON	ON	ON	ON	ON	ON	ON	ON	OFF	OFF	OFF	ON	
16	REMOTE RECEIVE	OFF/00/11/22/33/...../88/99/**/##	OFF	OFF	OFF	OFF	OFF	OFF	**	OFF	OFF	OFF	OFF	**	11	
17	MEM./FEED SWITCH	MEMORY/FEEDER	MEM.	MEM.	MEM.	MEM.	MEM.	MEM.	MEM.	MEM.	MEM.	MEM.	MEM.	MEM.	MEM.	
18	POWER SAVE MODE	ON/OFF	OFF	OFF	ON	ON	OFF	OFF	OFF	OFF	OFF	OFF	OFF	OFF	OFF	
19	ECM FUNCTION	ON/OFF	ON	ON	ON	ON	ON	ON	ON	ON	ON	ON	ON	ON	ON	
20	REMOTE DIAGNOSIS	ON/OFF	OFF	OFF	OFF	OFF	OFF	ON	ON	OFF	OFF	OFF	OFF	OFF	ON	
21	PC/FAX SWITCH	ON/OFF	ON	ON	OFF	OFF	OFF	OFF	OFF	OFF	OFF	OFF	OFF	OFF	OFF	
22	NO TONER MEM. RX	ON/OFF	OFF	OFF	ON	OFF	OFF	OFF	OFF	ON	OFF	OFF	OFF	OFF	ON	
23	MEM. FULL SAVE	ON/OFF	OFF	OFF	OFF	OFF	OFF	OFF	OFF	OFF	OFF	OFF	OFF	OFF	OFF	
24	CONTINIOUS TONE	ON/OFF	OFF	OFF	OFF	OFF	OFF	OFF	OFF	OFF	OFF	OFF	OFF	OFF	OFF	
25	INSTANT DIALING	ON/OFF	ON	ON	ON	ON	ON	ON	ON	ON	ON	ON	ON	ON	ON	
26	RESTRICT ACCESS	ON/OFF	OFF	OFF	OFF	OFF	OFF	OFF	OFF	OFF	OFF	OFF	OFF	OFF	OFF	
27	WIDTH REDUCTION	ON/OFF	OFF	OFF	OFF	OFF	OFF	OFF	OFF	OFF	OFF	OFF	OFF	OFF	OFF	
28	TONER SAVE	ON/OFF	OFF	OFF	OFF	OFF	OFF	OFF	OFF	OFF	OFF	OFF	OFF	OFF	OFF	
29	CNG COUNT	1-5	1	1	1	1	1	1	1	1	1	1	1	1	1	
30	ISDN DIAL MODE	G4 MODE/G3 MODE	G4	G4	G4	G4	G4	G4	G4	G4	G4	G4	G4	G4	G4	Only ISDN opt. Installed
31	SPEECH RECEIVE	ON/OFF	ON	ON	ON	ON	ON	ON	ON	ON	ON	ON	ON	ON	ON	Only ISDN opt. Installed

Table 2.9 (2/2) User Default Setting

No.	User Setting Items	Setting Selection	14 NOR	15 SUI	16 AUT	17 HOL	18 ITA	19 ESP	20 CHN	(21) Factory	Note
1	MCF (single-loc.)	ON/OFF	ON	ON	ON	OFF	OFF	OFF	OFF	OFF	
2	MCF (multi-loc.)	ON/OFF	ON	ON	ON	ON	ON	OFF	ON	OFF	
3	ERR.REPORT (MCF.)	ON/OFF	ON	ON	ON	ON	OFF	ON	ON	OFF	
4	IMAGE IN MCF.	ON/OFF	ON	ON	ON	ON	ON	ON	ON	ON	
5	SENDER ID	ON/OFF	ON	ON	ON	ON	ON	ON	ON	ON	
6	MONITOR VOLUME	OFF/LOW/HIGH	OFF	LOW	LOW	LOW	HIGH	HIGH	LOW	HIGH	
7	BUZZER VOLUME	LOW/MID/HIGH	LOW	MID	MID	MID	HIGH	HIGH	MID	HIGH	
8	CLOSED NETWORK	OFF/ T/R / RX	OFF	OFF	OFF	OFF	OFF	OFF	OFF	OFF	
9	TX MODE DEFAULT	STD/FINE/EX-FINE/PHOTO NORMAL/DARK/LIGHT	STD NOR	STD NOR	STD NOR	STD NOR	STD NOR	STD NOR	STD NOR	STD NOR	
10	T/F TIMER PRG.	20 sec/35 sec	35	35	35	20	35	20	35	35	
11	RING RESPONSE	1 ring/5 sec/10 sec/15 sec/20 sec	1ring	5sec	1ring	1ring	1ring	1ring	1 ring	1ring	
12	DISTINCTIVE RING	OFF/ON/SET	OFF	OFF	OFF	OFF	OFF	OFF	OFF	OFF	
13	PAPER SIZE	1st Tray=A4/LET./LGL13/LGL14 /EXEC/A5/A6/JISB5	A4	A4	A4	A4	A4	A4	A4	LET	
14	USER LANGUAGE	LNG1/LNG2	LNG2	LNG2	LNG2	LNG2	LNG2	LNG2	LNG1	LNG1	
15	INCOMING RING	OFF/ON/DRC	ON	ON	ON	OFF	ON	OFF	ON	ON	
16	REMOTE RECEIVE	OFF/00/11/22/33/...../88/99/**/##	OFF	OFF	OFF	OFF	OFF	OFF	OFF	OFF	
17	MEM./FEED SWITCH	MEMORY/FEEDER	MEM.	MEM.	MEM.	MEM.	MEM.	MEM.	MEM.	MEM.	
18	POWER SAVE MODE	ON/OFF	ON	ON	ON	OFF	ON	OFF	ON	OFF	
19	ECM FUNCTION	ON/OFF	ON	ON	ON	ON	ON	ON	ON	ON	
20	REMOTE DIAGNOSIS	ON/OFF	OFF	OFF	OFF	OFF	OFF	OFF	OFF	ON	
21	PC/FAX SWITCH	ON/OFF	OFF	OFF	OFF	ON	OFF	OFF	OFF	OFF	
22	NO TONER MEM. RX	ON/OFF	ON	OFF	OFF	OFF	ON	OFF	OFF	OFF	
23	MEM. FULL SAVE	ON/OFF	OFF	OFF	OFF	OFF	OFF	OFF	OFF	OFF	
24	CONTINIOUS TONE	ON/OFF	OFF	OFF	OFF	OFF	OFF	OFF	OFF	OFF	
25	INSTANT DIALING	ON/OFF	ON	ON	ON	ON	ON	ON	ON	ON	
26	RESTRICT ACCESS	ON/OFF	OFF	OFF	OFF	OFF	OFF	OFF	OFF	OFF	
27	WIDTH REDUCTION	ON/OFF	OFF	OFF	OFF	OFF	OFF	OFF	OFF	OFF	
28	TONER SAVE	ON/OFF	OFF	OFF	OFF	OFF	OFF	OFF	OFF	OFF	
29	CNG COUNT	1-5	1	1	1	1	1	1	1	1	
30	ISDN DIAL MODE	G4 MODE/G3 MODE	G4	G4	G4	G4	G4	G4	G4	G4	Only ISDN opt. Installed
31	SPEECH RECEIVE	ON/OFF	ON	ON	ON	ON	ON	ON	ON	ON	Only ISDN opt. Installed

2.2.1.5 User's Functions Example

Note: The fonts displayed on the LCD operation panel may differ from fonts written this manual.

1) Function Program

Operations:

- To bring the LCD up to the desired message, press SELECT FUNCTION key once and one-touch key No. 9 in the standby mode. (In case of no message in memory)
- Press [←] key.
- Enter two-digit function number, then the display will show the set item corresponding to the number entered. If you want to set up all or several items starting with 01, then enter 01.

The display shows:

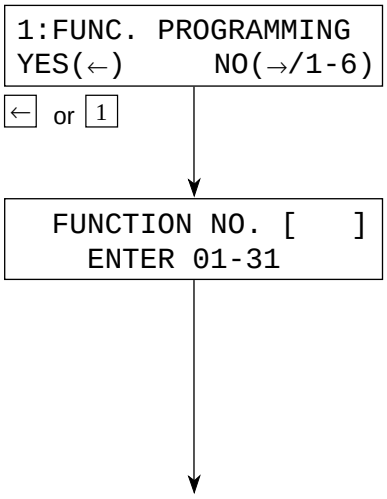

To an individual setting item.
(See Table 2.10)

Table 2.10 (1/3) User's Functions

Tap No.	Name of Function	The Display Shows
0 1	Message confirmation report (Single location)	01:MCF(SINGLE-LOC.) [X] YES(←) NO(→) → Setting (Toggle) X: OFF ⇆ ON
0 2	Message confirmation report (Multiple locations)	02:MCF (MULTI-LOC.) [X] YES(←) NO(→) → Setting (Toggle) X: OFF ⇆ ON
0 3	Error report	03:ERR. REPORT(MCF.) [X] YES(←) NO(→) → Setting (Toggle) X: OFF ⇆ ON
0 4	Image in MCF.	04:IMAGE IN MCF. [X] YES(←) NO(→) → Setting (Toggle) X: OFF ⇆ ON
0 5	Sender ID	05:SENDER ID [X] YES(←) NO(→) → Setting (Toggle) X: OFF ⇆ ON
0 6	Monitor volume	06:MONITOR VOLUME [X] YES(←) NO(→) → Setting X: OFF → LOW → MID. HIGH ← H-MID.
0 7	Buzzer volume	07:BUZZER VOLUME [X] YES(←) NO(→) → Setting (Toggle) X: MID → HIGH → LOW
0 8	Closed network	08:CLOSED NETWORK [X] YES(←) NO(→) → Setting X: T/R → RX → OFF
0 9	TX mode default	09:TX MODE DEFAULT YES(←) NO(→) → Setting RESOLUTION & ORIGINAL ***Note 1***
1 0	Telephone/fax automatic switchover timer	10:T/F TIMER PRG. [X] YES(←) NO(→) → Setting (Toggle) X: 20SEC ⇆ 35SEC
1 1	Ring response time	11:RING RESPONSE [X] YES(←) NO(→) → Setting X: 1RING → 05SEC → 10SEC → 15SEC → 20SEC ***Note 2***
1 2	Distinctive ring	12:DISTINCTIVE RING [X] YES(←) NO(→) → Setting (Toggle) X:OFF → ON → SET ***Note 2***
1 3	Cassette paper size	13:PAPER SIZE [X] YES(←) NO(→) → Setting X: A4 → LET → LGL 13 → LGL 14 → EXEC. → A5 → A6 → JISB5 ***Note 3***

Table 2.10 (2/3) User's Functions

Tap No.	Name of Function	The Display Shows
1 4	User language	14:USER LANGUAGE [X] YES(←) NO(→) → Setting X: ENG. ⇆ (Other)
1 5	Incoming ring	15:INCOMING RING [X] YES(←) NO(→) → Setting (Toggle) X: OFF → ON → DRC
1 6	Remote receive	16:REMOTE RECEIVE [X] YES(←) NO(→) OFF → 00 → 11 → 22 → 33 → 44 → 55 → 77 → 88 → 99 → ## → **
1 7	Memory and feeder selection	17:MEM/FEEDER SW. [X] YES(←) NO(→) → Setting X: MEM. ⇆ FEED.
1 8	Power save mode (not available for ODA version)	18:POWER SAVE MODE [X] YES(←) NO(→) → Setting (Toggle) X: OFF ⇆ ON
1 9	ECM function	19:ECM FUNCTION [X] YES(←) NO(→) → Setting (Toggle) X: OFF ⇆ ON
2 0	Remote diagnosis	20:REMOTE DIAGNOSIS [X] YES(←) NO(→) → Setting (Toggle) X: OFF ⇆ ON
2 1	PC/FAX switch	21:PC/FAX SWITCH [X] YES(←) NO(→) → Setting (Toggle) X: OFF ⇆ ON
2 2	No toner memory reception	22:NO TONER MEM. RX [X] YES(←) NO(→) → Setting (Toggle) X: OFF ⇆ ON
2 3	Memory full save	23:MEM FULL SAVE [X] YES(←) NO(→) → Setting (Toggle) X: OFF ⇆ ON
2 4	Continuous tone	24:CONTINUOUS TONE [X] YES(←) NO(→) → Setting (Toggle) X: OFF ⇆ ON
2 5	Instant dialing	25:INSTANT DIALING [X] YES(←) NO(→) → Setting (Toggle) X: OFF ⇆ ON
2 6	Restricted access	26:RESTRICT ACCESS [X] YES(←) NO(→) → Setting (Toggle) X: OFF ⇆ ON

Table 2.10 (3/3) User's Functions

Tap No.	Name of Function	The Display Shows
2 7	Width reduction	27:WIDTH REDUCTION [X] YES(←) NO(→) → Setting (Toggle) X: OFF ⇆ ON
2 8	Toner save	28:TONER SAVE [X] YES(←) NO(→) → Setting (Toggle) X: OFF ⇆ ON
2 9	CNG count	***Note 4*** 29:CNG COUNT [X] YES(←) NO(→) → Setting (Toggle) X: 1 → 2 → 3 → 4 → 5
3 0	ISDN DIAL MODE	***Note 5*** 30:ISDN DIAL MODE [X] YES(←) NO(→) → Setting (Toggle) X: G3 ⇆ G4
3 1	Speech receive	***Note 5*** 31:SPEECH RECEIVE [X] YES(←) NO(→) → Setting (Toggle) X: OFF ⇆ ON

Note 1: RESOLUTION & ORIGINAL of Tx mode defult setting can be selected by using ∅ key.

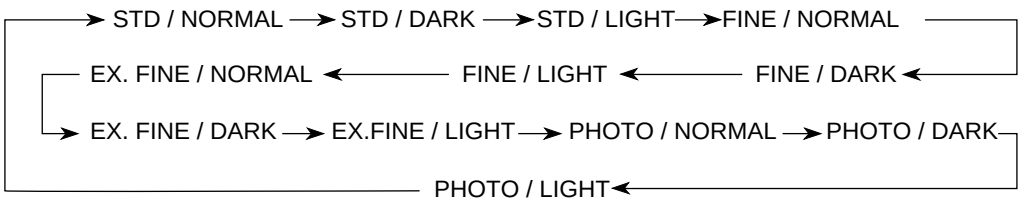

2: When the service bit is set to "off" and the corresponding bit of XPARA of national code is set to "off", Ring response and/or Distinctive ring is bypassesd as follows:

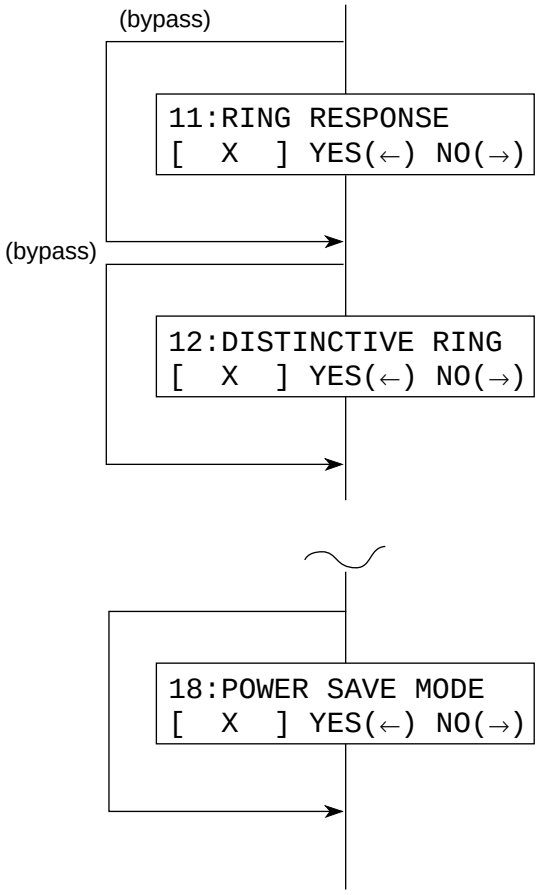

3: EXEC., A5 or A6 are used when MFP function is valid.

4: For G4 option, skip this step.
This step is valid when Service Bit = ON.

5: "FUNC. NOT AVAIL" is displayed for 3 seconds by pressing the No key if a MUPIS I/F error occurs only when G4 option is mounted.

2) Ring response time

Before specifying the ring response time, set the service bit on following the operations shown in 2.2.1.3. (Service Bit Setting).

Operations: **The display shows:**

- To bring the LCD up to the desired message, press SELECT FUNCTION key once and one-touch key No. 9 in the standby mode. (In case of no message in memory)
- Press [←] key enter using the ten-key pad.
- Enter 11 using the ten-key pad.
- Press [→] key until the setting you want is displayed, then press [←] key.

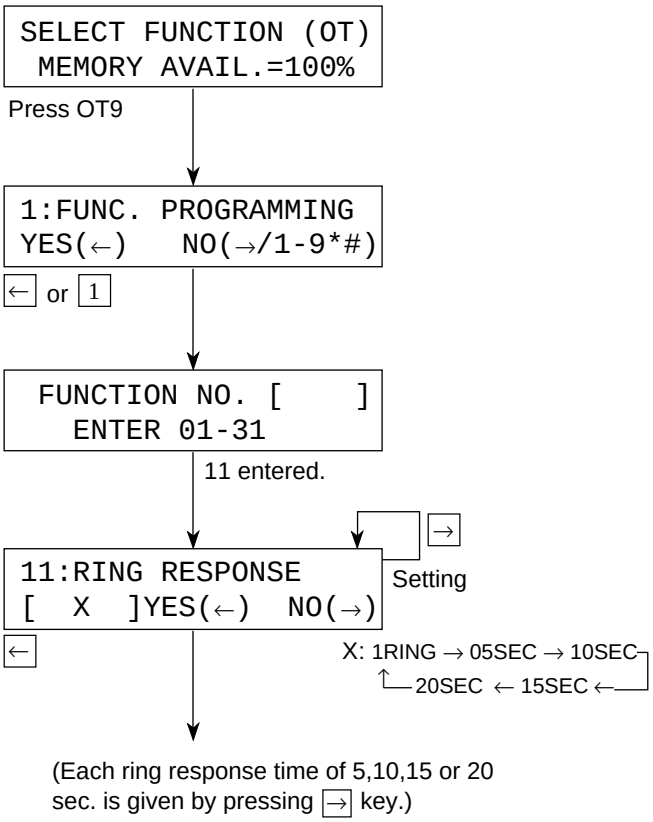

3) Dial parameters (In case the service bit is "OFF".)

To get the "DIAL PARAMETER" message on the display, perform the same operetion as Table 2.11. (Dial parammeters settings).

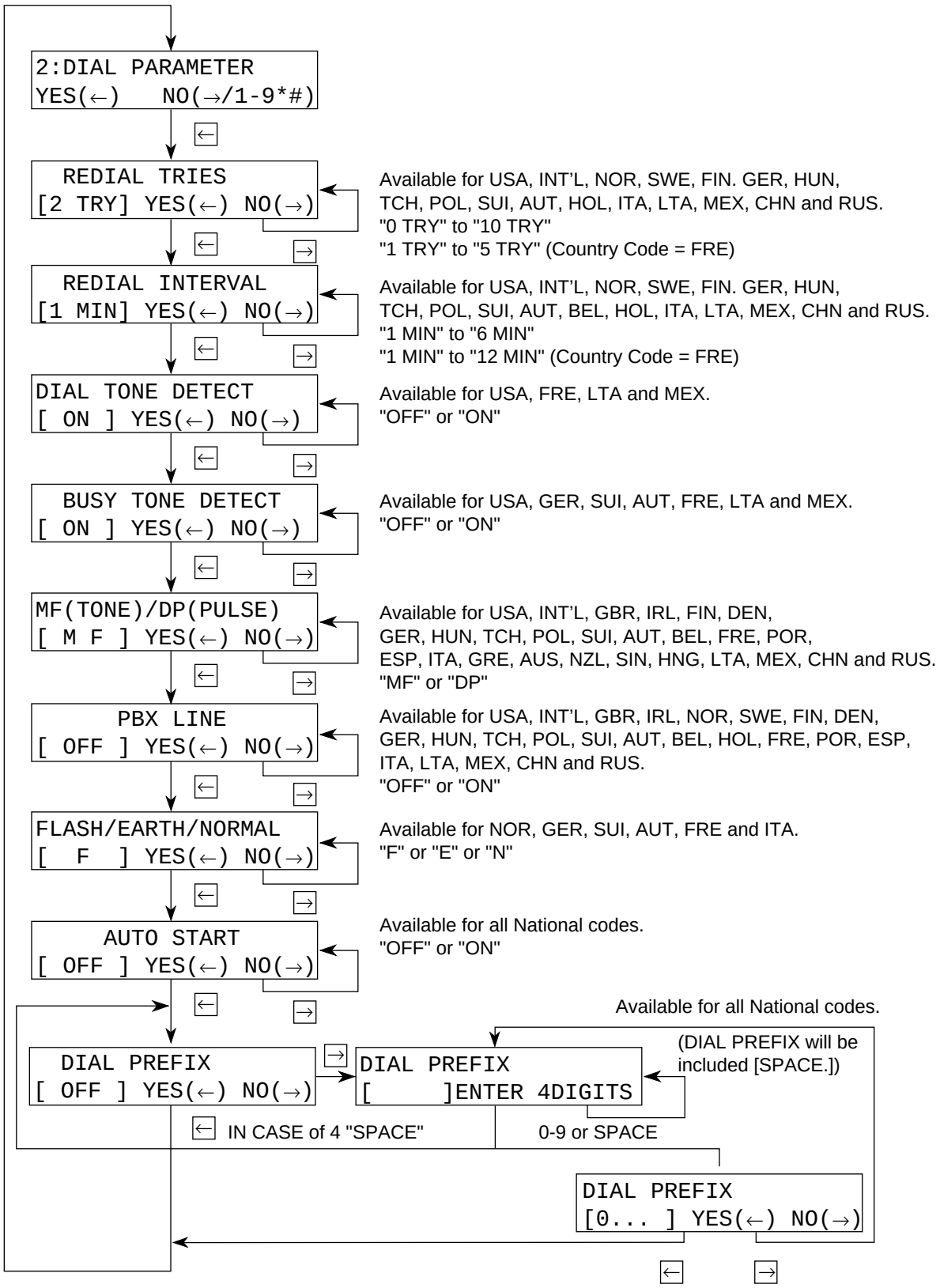

The following table can be set depending on the National codes even if the service bit is "off".

Table 2.11 Dial parameters setting if the service bit "OFF"

NATIONAL CODE	USA	INT'L	GBR	IRL	NOR	SWE	FIN	DEN	GER	HUN	TCH	POL
Redial tries	○	○			○	○	○		○	○	○	○
Redial interval	○	○			○	○	○		○	○	○	○
Dial tone detect	○											
Busy tone detect	○								○			
MF/DP	○	○		○			○	○	○	○	○	○
Pulse dial rate												
Pulse make ratio												
Pulse dial type												
MF duration												
PBX line	○	○	○	○	○	○	○	○	○	○	○	○
Flash/Earth/Normal					○				○			
Auto start	○	○	○	○	○	○	○	○	○	○	○	○
Dial	○	○	○	○	○	○	○	○	○	○	○	○

NATIONAL CODE	SUI	AUT	BEL	HOL	FRE	POR	ESP	ITA	GRE	AUS	NZL	SIN	HNG	LTA	MEX	CHN	RUS
Redial tries	○	○		○				○						○	○	○	○
Redial interval	○	○	○	○				○						○	○	○	○
Dial tone detect	○	○												○	○	○	
Busy tone detect	○	○			○									○	○	○	
MF/DP	○	○	○		○	○	○	○	○	○	○	○	○	○	○	○	○
Pulse dial rate																	
Pulse make ratio																	
Pulse dial type																	
MF duration																	
PBX line	○	○	○	○	○	○	○	○						○	○	○	○
Flash/Earth/Normal	○	○			○			○									
Auto start	○	○	○	○	○	○	○	○	○	○	○	○	○	○	○	○	○
Dial	○	○	○	○	○	○	○	○	○	○	○	○	○	○	○	○	○

Note: The blank in the table is not indicated on the LCD.

Operations:

- To bring the LCD up to the desired message, press SELECT FUNCTION key once and one-touch key No. 9 in the standby mode. (In case of no message in memory)
- Enter 3 using the ten-key pad.
- Press ← key.
- Enter date and time by using the ten-key pad (0 to 9, *, # keys).

The display shows:

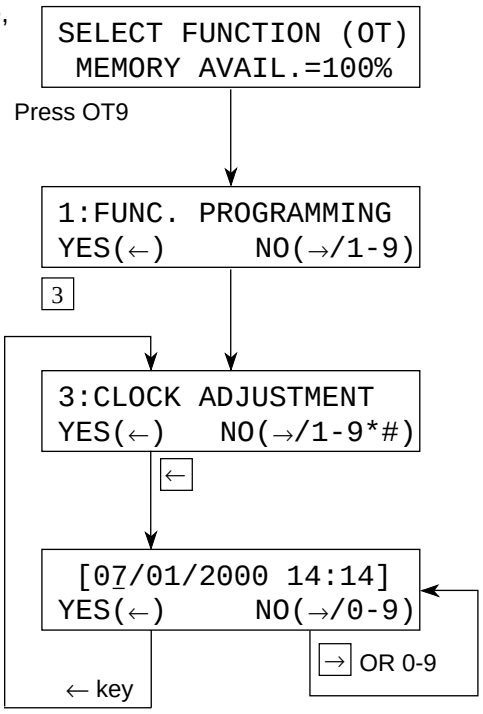

Note: Data outside 1996 to 2095 cannot be registered.

2.2.1.7 Dual Access Operation

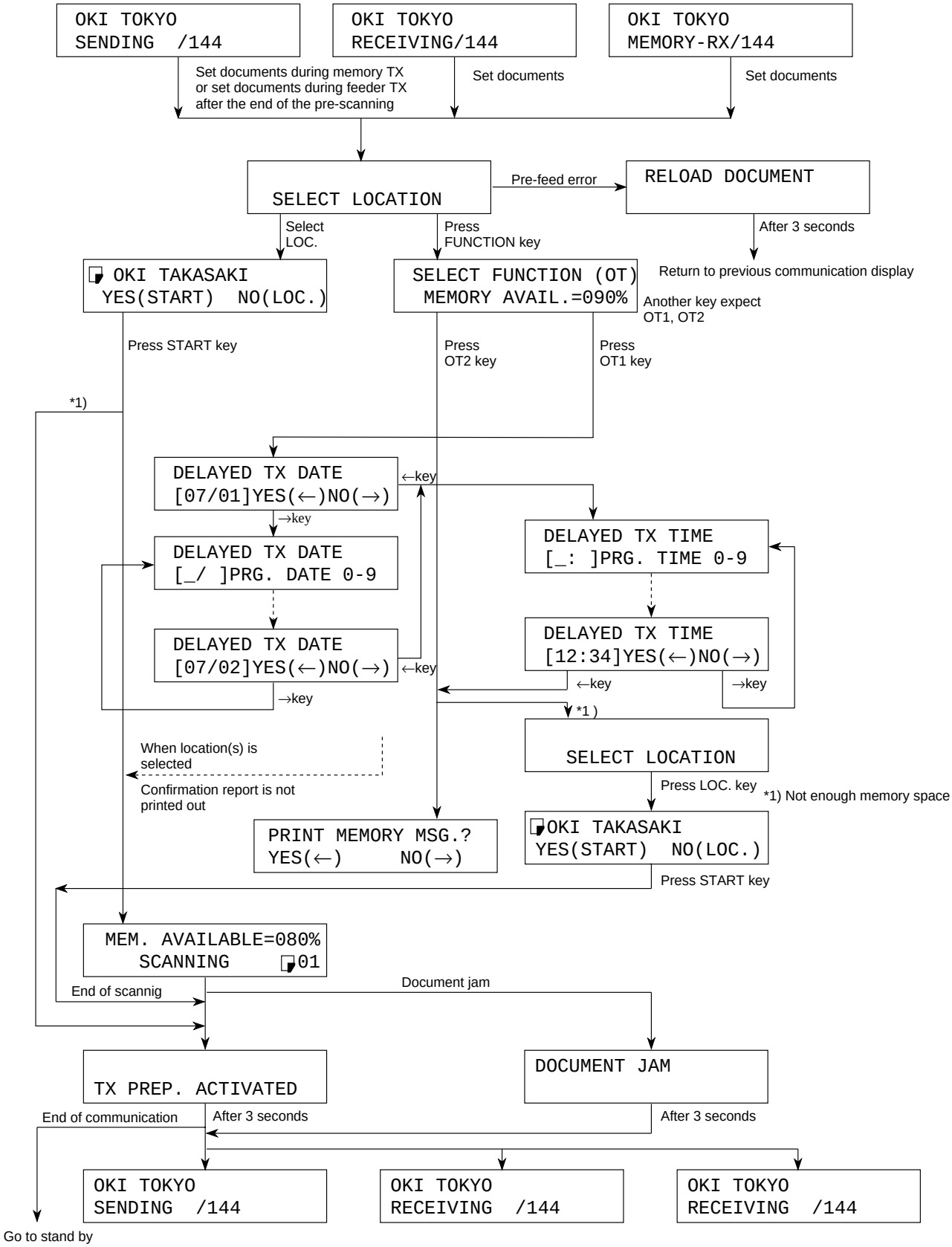

- TSI/CSI (Defalut: Blank)
- Registration of sender ID (Defalut: Blank)
- Registration of telephone number for the call-back message (Defalut: Blank)

Operations:

- To bring the LCD up to the desired message, press SELECT FUNCTION key once and one-touch key No. 9 in the standby mode.
  (In case of no message in memory)
- Enter 4 using the ten-key pad.
- Press [←] key.

The display shows:

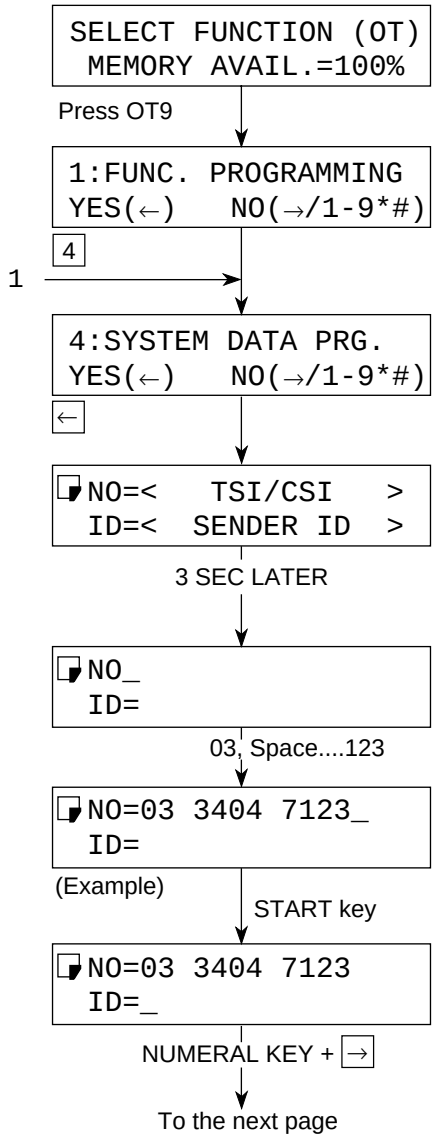

Note 1: Use the UNIQUE key to input special symbols.
2: When 16 digits or more is registered, the high-order 16 digits are displayed (TSI, CSI, ID or CBM)

Operations:

The display shows:

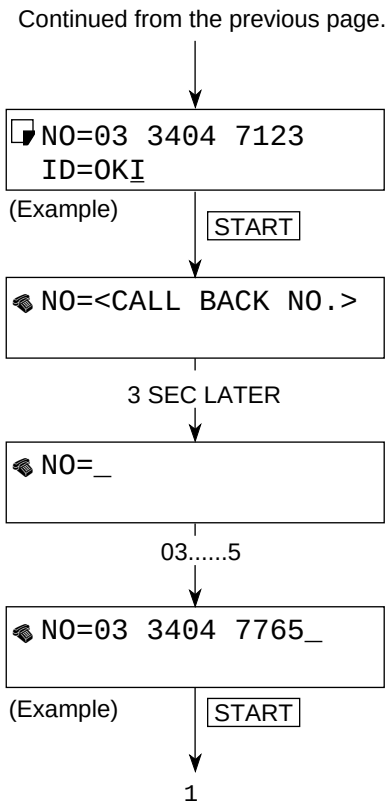

- Press START key.

- Press START key.

2.2.1.9 Dial Parameters Settings

(1) Procedure

The following shows the case in which the service bit is on.

Operations:	The display shows:
• To bring the LCD up to the desired message, press SELECT FUNCTION key once and one-touch key No. 9 in the standby mode. (In case of no message in memory)	SELECT FUNCTION (OT) MEMORY AVAIL.=100%
	Press OT9
• Enter 2 using the ten-key pad.	1:FUNC. PROGRAMMING YES(←) NO(→/1-9*#)
	2
• Press ← key.	2:DIAL PARAMETER YES(←) NO(→/1-9*#)
	←
	To DIAL PARAMETERS

*1 Not all of the following dial parameters are released to the users (depending on National codes and if the Service bit is OFF)

The display shows:

Continued from the previous page.

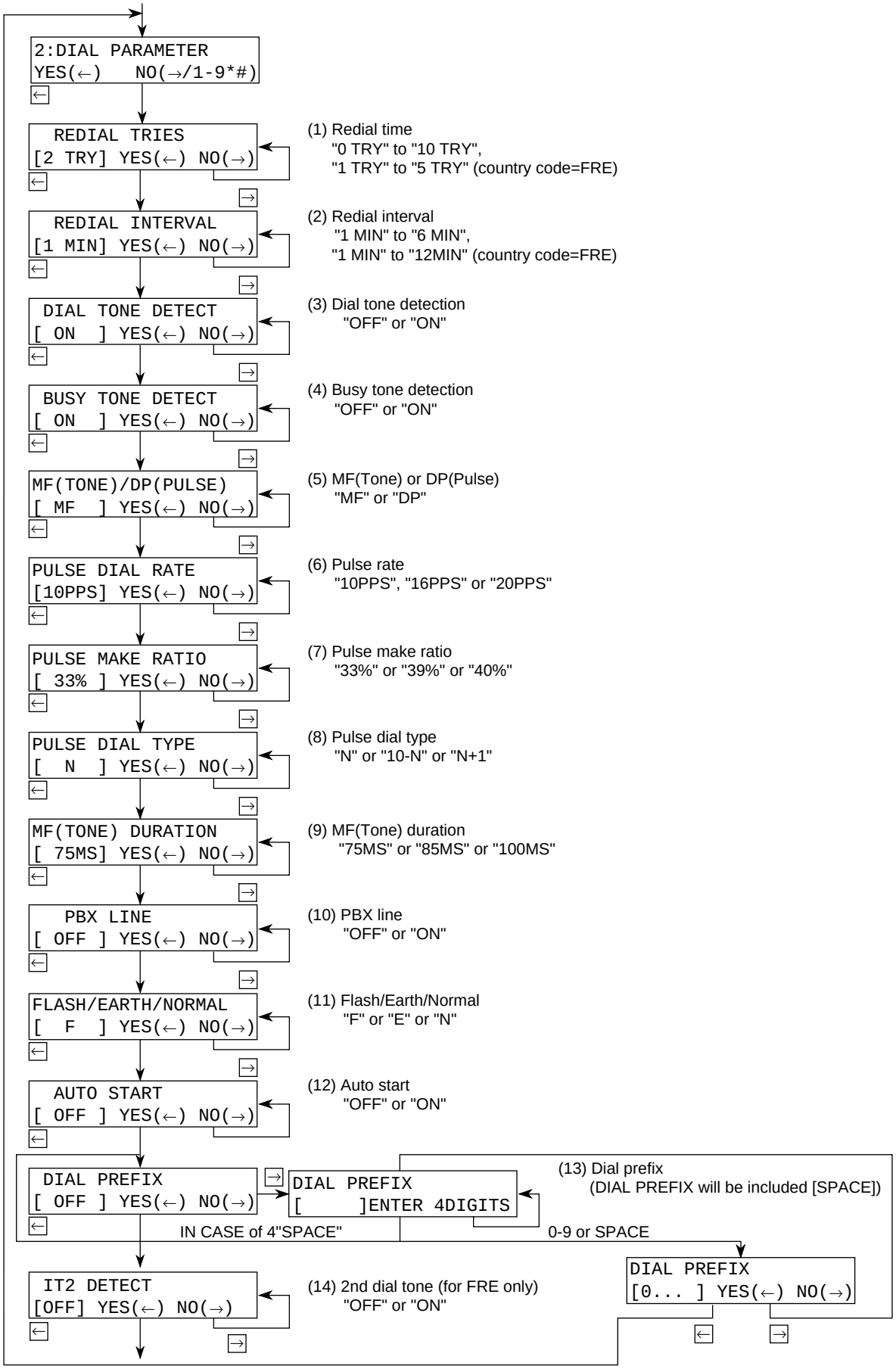

Table 2.12 Default Settings of Dial Parameters

No.	User Setting Items	Setting Selection	COUNTRY CODE																													
			1 USA	2 INT'L	3 GBR	4 IRL	5 NOR	6 SWE	7 FIN	8 DEN	9 GER	10 HUN	11 TCH	12 POL	13 SUI	14 AUT	15 BEL	16 HOL	17 FRE	18 POR	19 ESP	20 ITA	21 GRE	22 AUS	23 NZL	24 SIN	25 HNG	26 LTA	27 MEX	28 CHN	29 RUS
1	REDIAL TRIES	0 - 10 TRIES	3	3	2	2	5	10	3	5	10	10	2	2	10	10	3	2	2	2	2	2	2	2	2	5	2	2	2	3	3
2	REDIAL INTERVAL	1 - 6 min	3	3	3	3	2	3	3	3	1	1	3	3	1	1	3	3	6	3	3	3	3	3	3	3	3	3	3	3	3
3	DIAL TONE DETECT	ON / OFF	OFF	ON	OFF	OFF	OFF	OFF	OFF	OFF	OFF	ON	ON	ON	OFF	OFF	OFF	OFF	OFF	OFF	OFF	OFF	OFF	ON	ON	ON	ON	OFF	OFF	OFF	ON
4	BUSY TONE DETECT	ON / OFF	ON	ON	ON	OFF	ON	ON	ON	ON	ON	OFF	ON	ON	ON	ON	ON	ON	ON	ON	ON	ON	ON	ON	ON	ON	ON	ON	ON	ON	ON	ON
5	MF (TONE)/DP (PULSE)	DP / MF	MF	MF	MF	MF	MF	MF	MF	MF	MF	DP	MF	DP	MF	MF	MF	MF	MF	DP	MF	MF	MF	MF	MF	MF	MF	MF	MF	MF	MF	MF
6	PULSE DIAL RATE	10 PPS / 16 PPS / 20 PPS	10	10	10	10	10	10	10	10	10	10	10	10	10	10	10	10	10	10	10	10	10	10	10	10	10	10	10	10	10	10
7	PULSE MAKE RATIO	33% / 39% / 40%	39%	33%	33%	33%	33%	39%	39%	39%	40%	33%	39%	33%	40%	40%	33%	39%	33%	33%	33%	39%	39%	33%	33%	33%	33%	39%	39%	33%	33%
8	PULSE DIAL TYPE	N / 10-N / N+1	N	N	N	N	N	N+1	N	N	N	N	N	N	N	N	N	N	N	N	N	N	N	N	10-N	N	N	N	N	N	N
9	MF (TONE) DURATION	75 ms / 85 ms / 100 ms	100	85	85	85	75	85	85	100	85	100	100	100	85	85	85	100	75	85	85	85	100	85	85	85	85	100	100	85	85
10	PBX LINE	ON/OFF	OFF	OFF	OFF	OFF	OFF	OFF	OFF	OFF	OFF	OFF	OFF	OFF	OFF	OFF	OFF	OFF	OFF	OFF	OFF	OFF	OFF	OFF	OFF	OFF	OFF	OFF	OFF	OFF	OFF	OFF
11	FLASH/EARTH/NORMAL	NORMAL / FLASH / EARTH	N	N	N	N	N	N	N	N	EARTH	N	N	N	FLASH	EARTH	N	N	FLASH	N	N	N	N	N	N	N	N	N	N	N	N	N
12	AUTO START	ON / OFF	ON	OFF	OFF	OFF	ON	ON	ON	ON	ON	ON	OFF	OFF	ON	ON	OFF	OFF	OFF	ON	ON	ON	OFF	ON	ON	ON	ON	ON	ON	ON	ON	OFF
13	DIAL PREFIX	OFF / (max. 4 digits)	OFF	OFF	OFF	OFF	OFF	OFF	OFF	OFF	0...	OFF	OFF	OFF	0...	0...	OFF	OFF	OFF	OFF	OFF	OFF	OFF	OFF	OFF	OFF	OFF	OFF	OFF	OFF	OFF	OFF
XPARAD[0]			f8	c8	08	08	c0	c0	c8	08	d8	c8	c8	c8	d8	d8	48	c0	18	08	08	c8	08	08	08	08	08	18	18	18	c8
XPARAD[1]			58	58	58	58	78	58	58	58	78	58	58	58	78	78	58	58	78	58	58	78	18	18	18	18	18	58	58	58	58

Note: User settings are possible for items without mesh.

Table 2.13 Dial Parameters Settings

No.	Item	Specifications
	Dial parameters	
01	Redial tries	Switches on the re-dial times to meet the regulations of the installed country. 0 to 10 tries (in one-try steps) 1 to 5 tries for FRE.
02	Redial interval	Switches on the re-dial intervals to meet the regulations of installed country. 1 to 6 minutes (in one-minute steps) 1 to 12 minutes for FRE.
03	Dial tone detect	Selects the dial tone detection. ON/OFF selectable. ON : Enable OFF : Disable
04	Busy tone detect	Selects the busy tone detection. ON/OFF selectable. ON : Enable OFF : Disable
05	MF (TONE) or DP (Pulse)	Selects dialling by multi-frequency or dial pulse.
06	Pulse dial rate	Selects the dialling pulse rates for the line. 10 pps/16 pps/20 pps selectable.
07	Pulse make ratio	Selects pulse dial rate. 33%/39%
08	Pulse dial type	Selects pulse dial type. Normal(N)/10-N/N+1
09	MF (Tone) duration	Selects MF (Tone) duration. 75/85/100 ms selectable.
10	PBX line	Selects PBX line. ON/OFF selectable. ON : PBX line OFF : PSTN
11	Flash/Earth/Normal	Selects the PBX type to meet the exchange requirements. NORMAL/EARTH/FLASH selectable. (PBX line origination types)
12	Auto start	Enables or disables the function of dialing without pressing the START key in one-touch dial and 2-digit auto dial modes. ON : Enable OFF : Disable
13	Access digit	Prefix dialing digits with which PBX connects the fax to the public line. OFF/max. 4digit(s) selectable. Digit : Enable OFF : Disable

2.2.1.10 Off-line Tests

(1) Purpose

Activate self-diagnosis which includes:
- Print test
- CPU-ROM version printing
- CPU-RAM check
- PROG version printing
- LANGUAGE version printing
- DEFAULT version printing
- RAM check
- RAM check (memory board: optional)

(2) Procedure

Operations:

- To bring the LCD up to the desired message, press SELECT FUNCTION key once and COPY key twice in the standby mode. (In case of no message in memory)
- Press [←] key.
- Press [←] key.
- Press [←] key for cheking and test printing. (An example of printed data is shown in Figure 2.7)

The display shows:

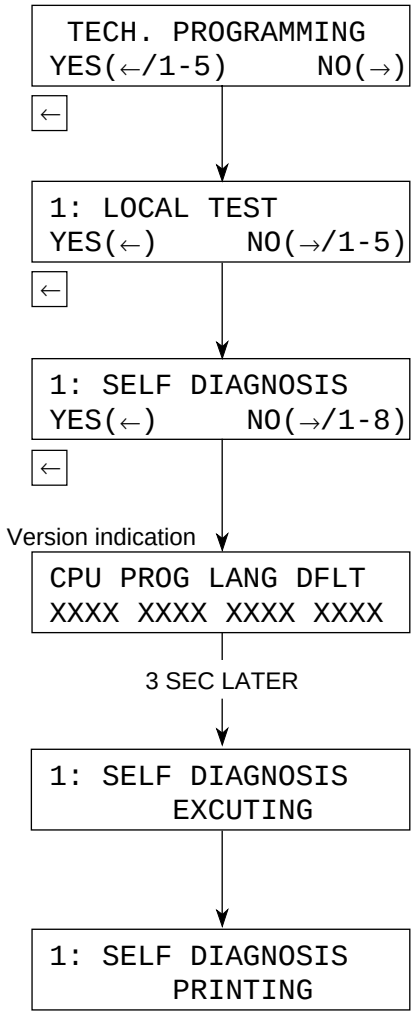

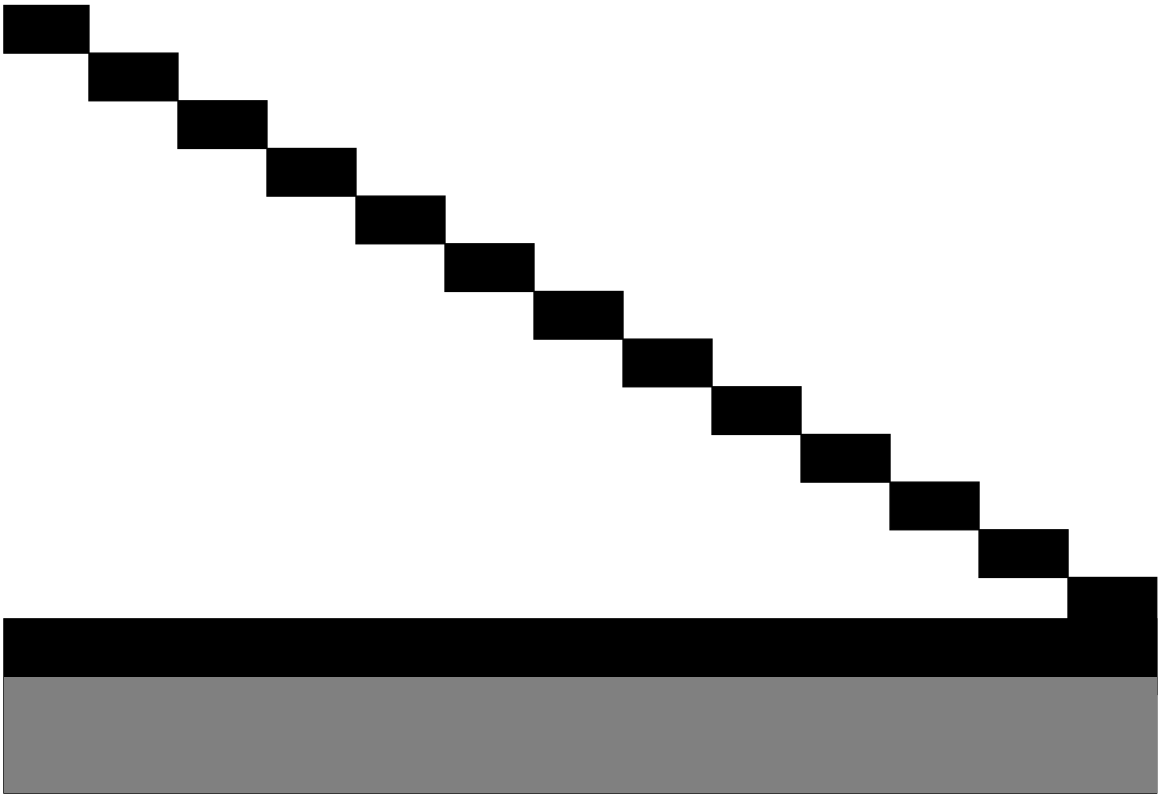

```
CPU-ROM   VERSION  aaaa
          HASH     OK   hhhh
CPU-RAM            OK
PROGRAM   VERSION  aaaa
          HASH     OK   hhhh
LANGUAGE  VERSION  aaaa
          HASH     OK   hhhh
DEFAULT   VERSION  aaaa
          HASH     OK   hhhh
RAM1      4M       OK                          *1
RAM2               OK
DEFAULT TYPE       01   03/03/2000  12:00
DEVICE ID          MFG:OKI DATA CORP;          *2
                   MDL:FX-046FAX;              *2
                   DES:OKI FX-046FAX;          *2
OPT-RAM   4M       OK                          *3
ISDN BOARD         OK
CPU-ROM   VERSION  aaaa
          HASH     OK   hhhh
CPU-RAM            OK
PROGRAM   VERSION  aaaa
          HASH     OK   hhhh
RAM       2M       OK
DPRAM     2K       OK
```

a: Alphabet and digit
h: Hexadecimal numeral
n: Digit

Figure 2.7 Printed Data of Self-diagnosis Print Test (Example)

*1: "4M" is printed for FX-060.
*2: Printed only when MFP option is provided. "MFG:." "MDL:," and "DES:" information is printed out of ID character string of PnP device.
Small letters can be printed. The maximum number of each of letters and characters shall be 45.
*3: Printing is available FX-060 only when option memory is mounted. ("2M" or "4M")

2.2.1.11 On-line Tests

1. Transmission

(1) Load documents

(2) Make sure that
- The loaded documents are fed in automatically.
- The STD and NORMAL lamps light.
- The display shows SELECT LOCATION.

(3) Dial the telephone number of the remote machine by the ten-key pad.

(4) Make sure that the telephone number of the remote machine is shown on the display.

(5) Press the START button.

(6) Typical message transmission flow is described in Figure 2.8.

2. Reception

(1) Use another machine for dialling.

(2) Make sure that
- The display shows AUTO REC. START.
- The message is automatically received.

(3) Typical message reception flow is described in Figure 2.9.

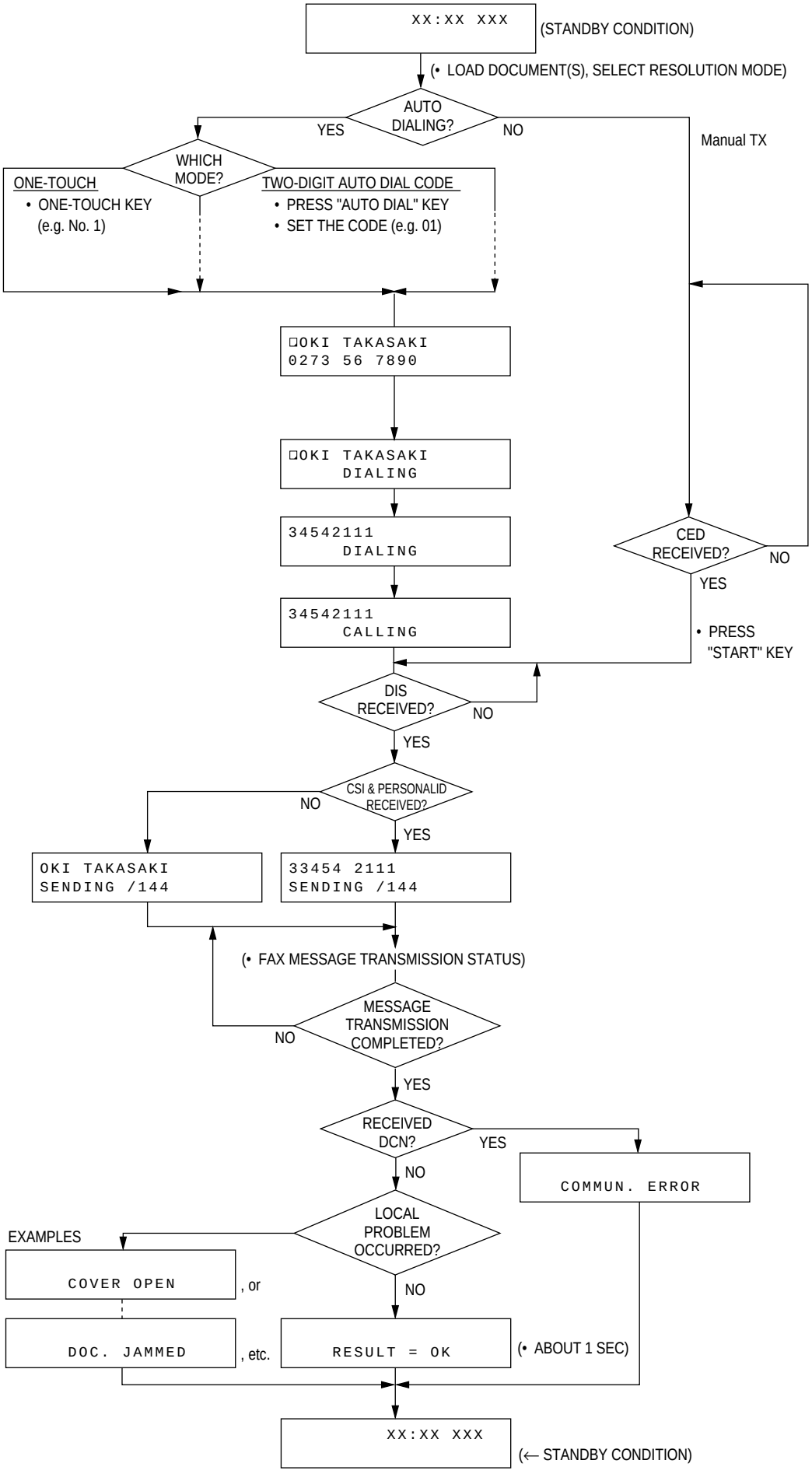

Figure 2.8 Typical Transmission Flow

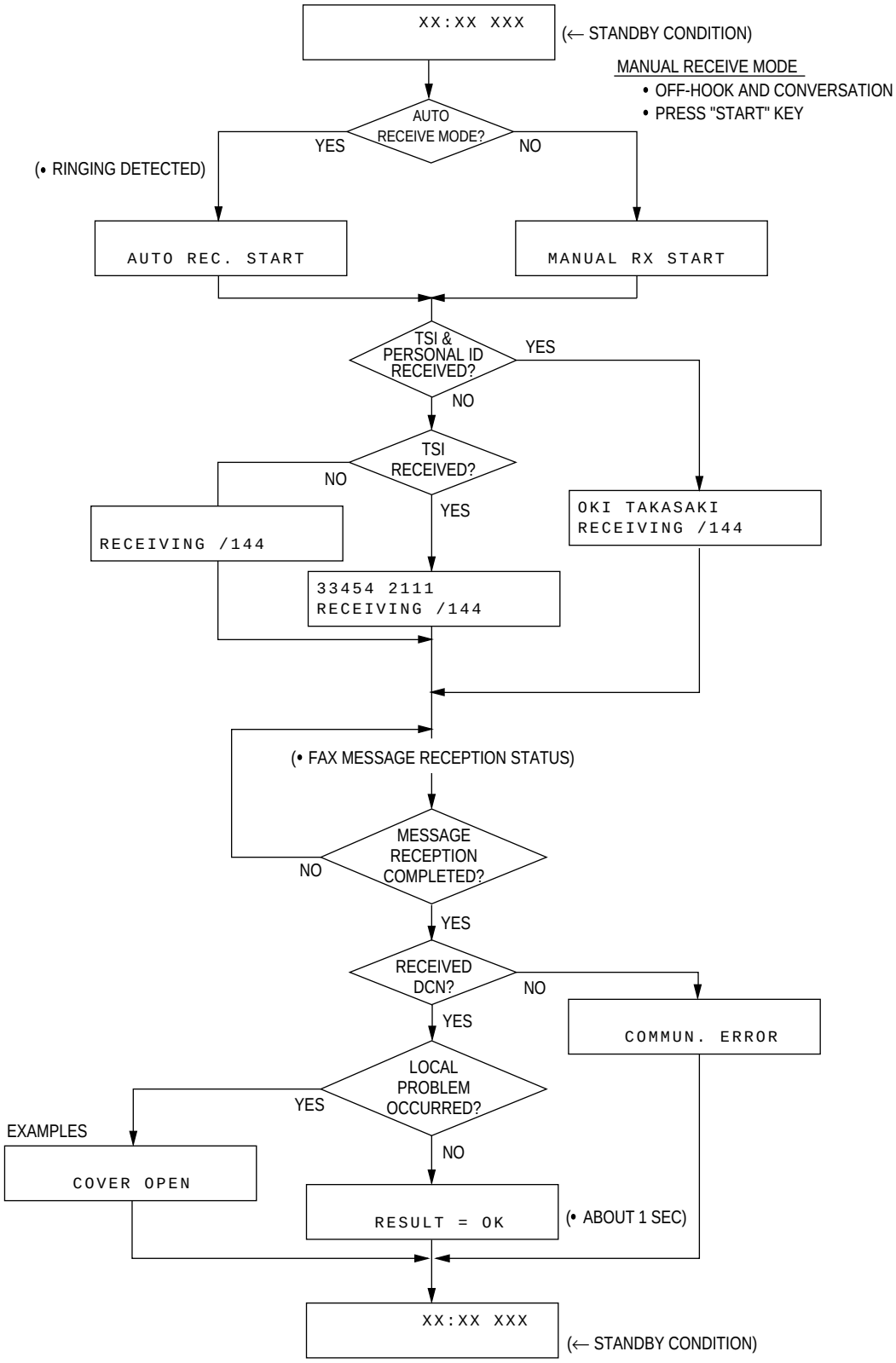

Figure 2.9 Typical Reception Flow

2.3 Installation of Optional Units

1) Items
   - Memory board
   - PC interface board
   - Telephone handset
   - Second paper cassette unit

2) Procedure
   - Turn the facsimile power switch OFF and remove the AC power cord.

     Note: Unplug the AC power cord from the wall outlet first and then from the facsimile.

   - Do not remove unnecessary parts.
   - Since screws and small parts are likely to be lost, they should temporarily be attached to their original positions.

1. Instllation of the memory board

- In OKIFAX 5650, MEM, 2 or 4MB memory board can be mounted on to the connector CN13 of M60 board.

Remove Rear Cover.
Remove the rear cover by removing the two screws (S1) and (S2).

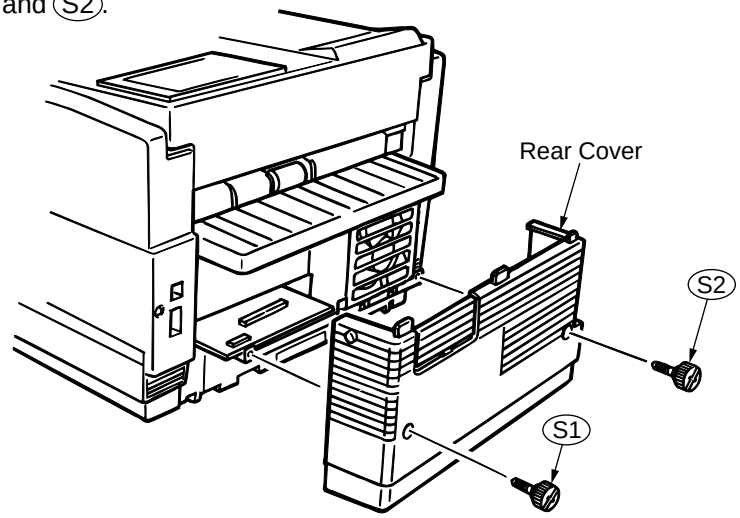

Figure 2.12

Install Memory Board:
First, install the memory board on to the connector CN13 of M60 board, and then tighten the screw to the separation plate.

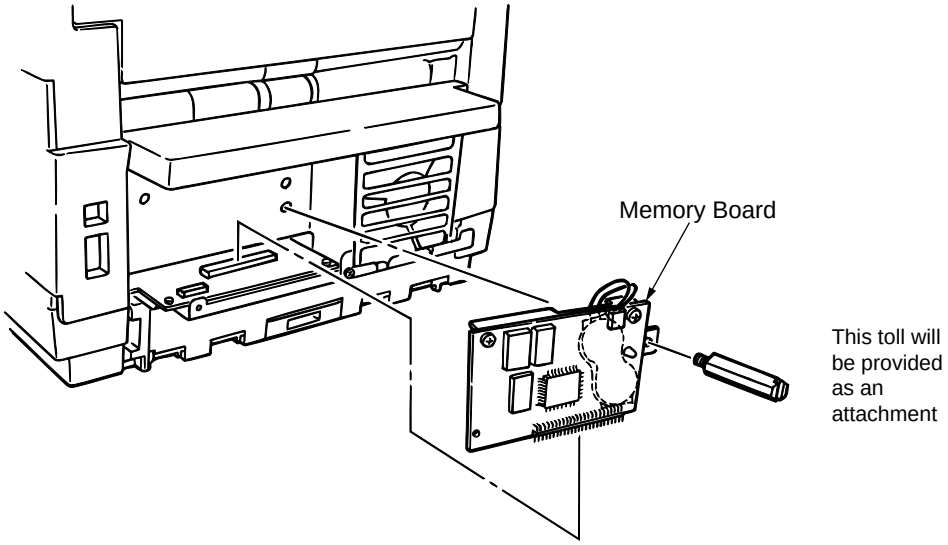

Figure 2.13

Note: Fit the fixing hooks at anchor positions on the cassette guide, after that, lift the rear cover slightly and push it inward.
Tighten the two screws (S1) and (S2) .

2. Installation of CTT (PC interface) board

Remove Rear Cover.
Remove the rear cover by removing the two screws (S1) and (S2).

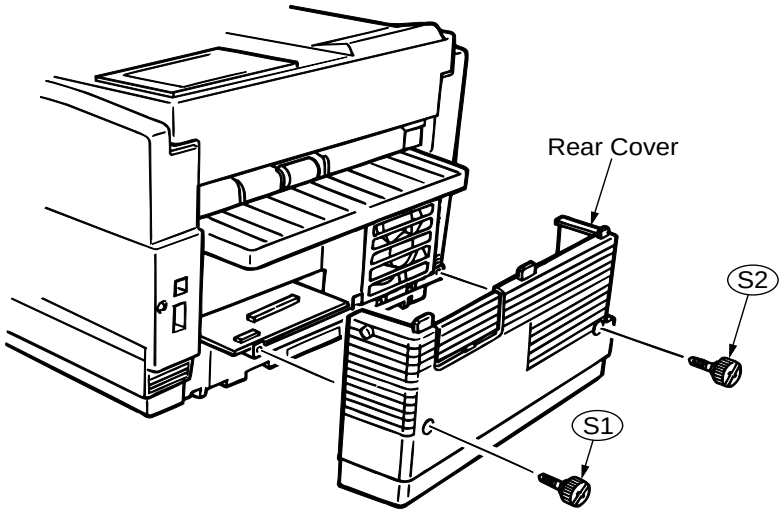

Figure 2.14

Install CTT board.
First, install CTT board on to the connector CN12 of M60 board, and then tighten the two screws to the separation plate.

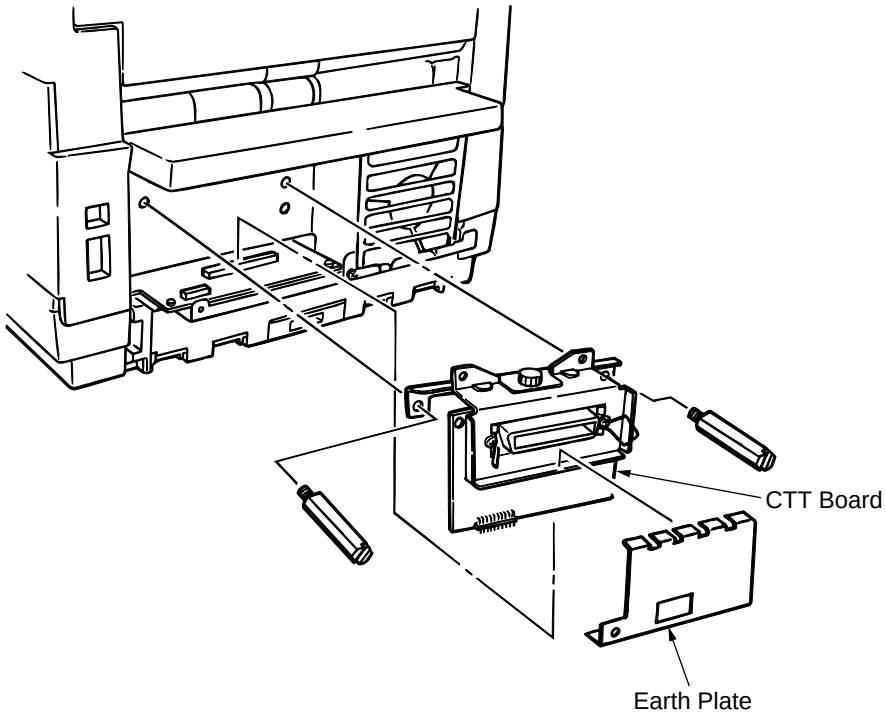

Figure 2.15

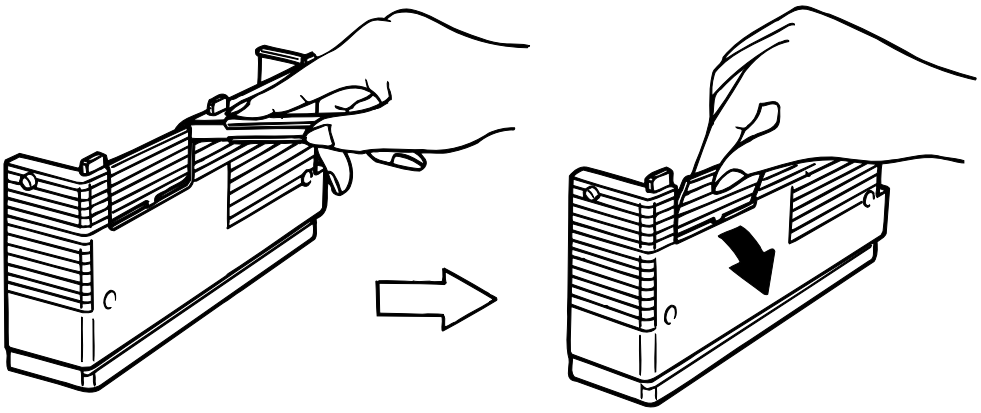

Figure 2.16

a) Insert the tip of a cutter or Nipper between the mold of Rear Cover and cut out it.

Note: Be careful not to rotate the cutter or Nipper, since this can cause scratching on the Rear Cover.

b) Grasp the mold of Rear Cover, and rotate it up and down until you can able to easily remove it.

3. Installation of an optional telephone set

(1) Dial Mode Setting (For TEL-UK)

Set the DIAL MODE slide switch on the rear side of the telephone set according to the dial mode of the connecting line.
(Set to MF for UK, Norway, Denmark, Belgium and Italy)

(2) Ringer Volume Setting (For TEL-UK and TEL-S)

Set the VOL slide switch on the rear cover side of the telephone set for the ringer sound volume.

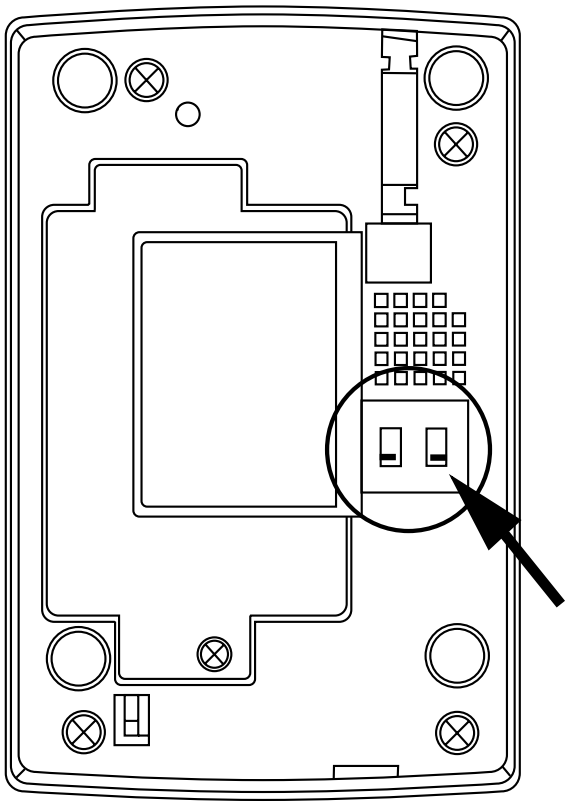

Figure 2.17

(3) After having taken out the telephone set, telephone handset and curled cord from the carton box, connect them as show in Figure 2.18.

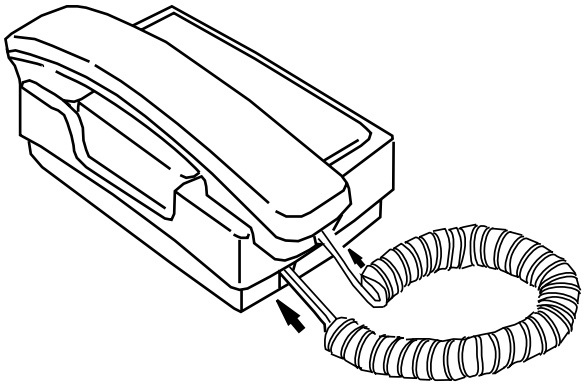

Figure 2.18

(4) After installing the connection cable to the telephone set, extend the connection cable like Figure 2.19.

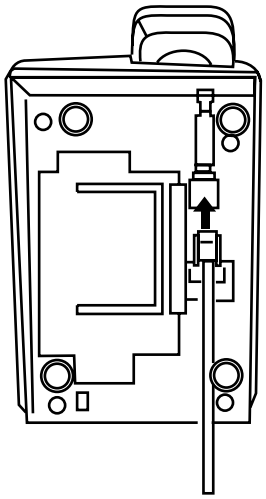

Figure 2.19

(5) After installing the cradle assembly to the telephone set, fix the screw like Figure 2.20.

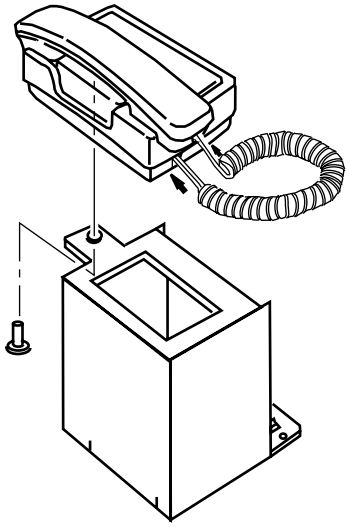

Figure 2.20

(6) Install the telephone assembly on the facsimile transceiver unit. In this case, cram the telephone assembly into the position of Figure 2.21 by lifting the facsimile transceiver unit slightly. When 2'nd tray is mounted on the facsimile transceiver unit, install the telephone assembly in the position of Figure 2.21.

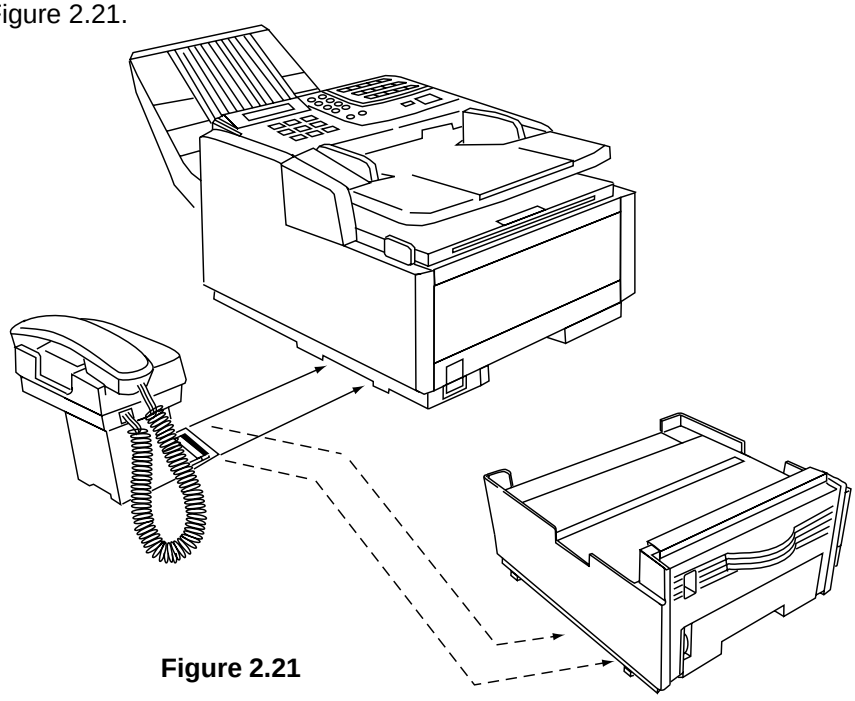

Figure 2.21

(7) Connect the terminal on the other side of the connection cable formed on the rear side of the equipment (TEL1), like Figure 2.22, to the telephone set.

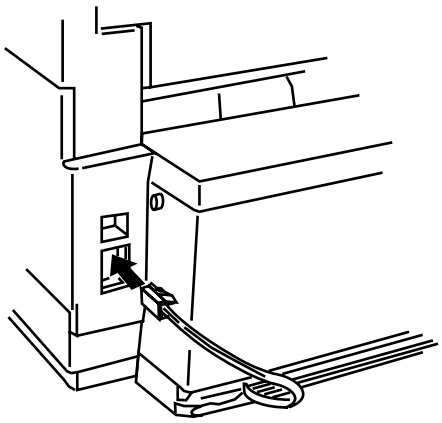

Figure 2.22

4. Second Paper Cassette Unit

This item explains how to install the Second Paper Cassette Unit option.

Second Paper Cassette Unit installation

(1) Turn the facsimile power switch off and remove the ACpower cord.

Note: Unplug the AC power cord from the wall outlet first and then from the facsimile.

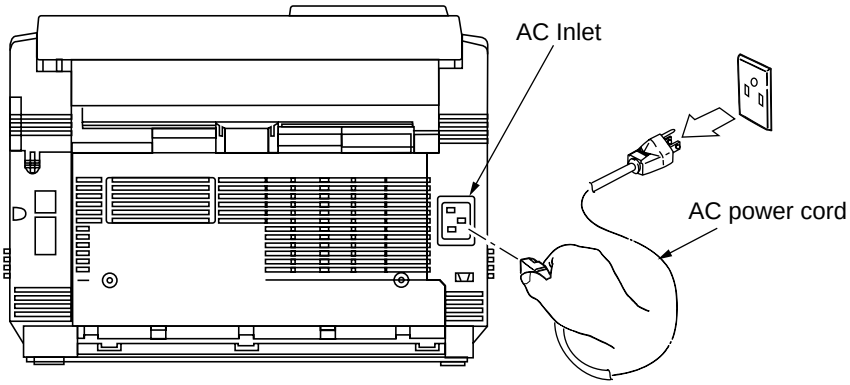

Figure 2.23

(2) Open the Manual Feed Guide.

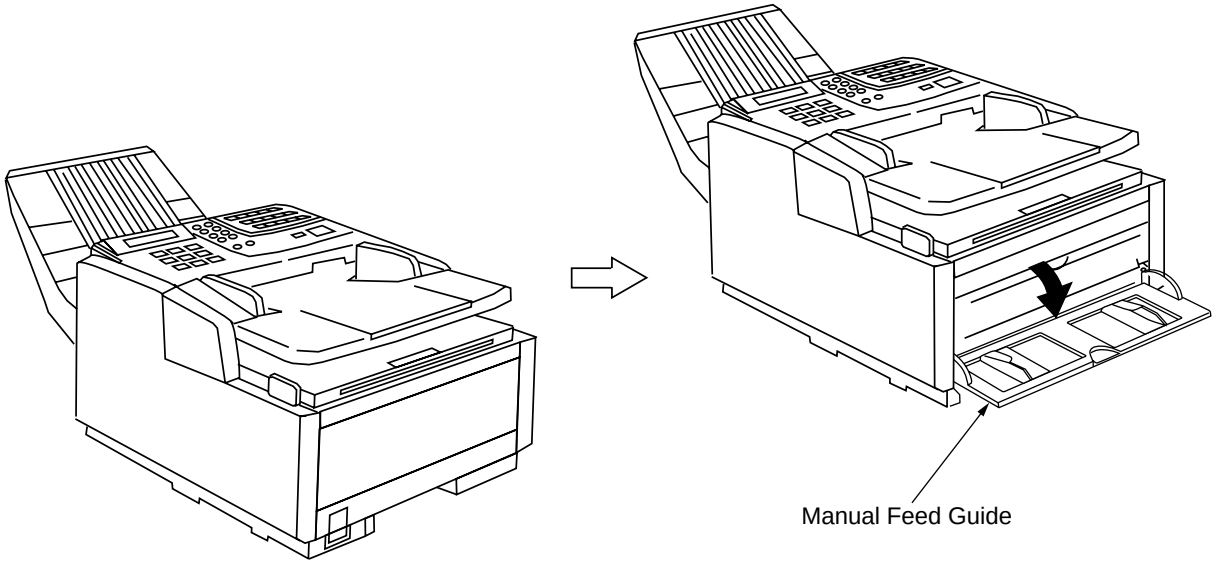

Figure 2.24

(3) Gently lower the facsimile on the Second Paper Cassette Unit.

Note: Make sure that the positioning boss of the Second Paper Cassette Unit fits into the 2 holes at the bottom of the facsimile transceiver main unit.

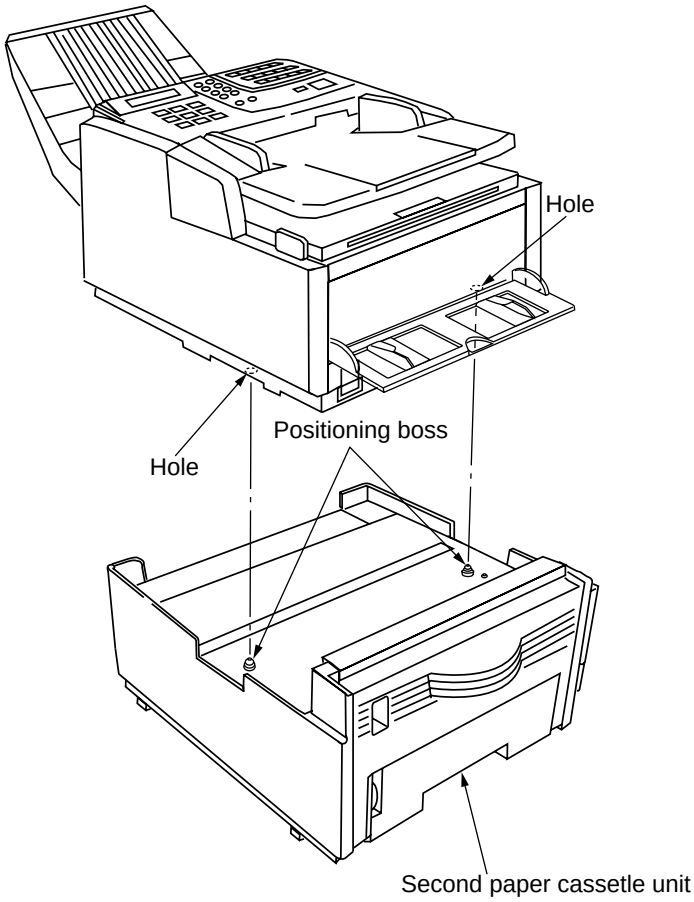

Figure 2.24

(4) Peel off the tape attached on the Second Paper Cassette Unit.
The Manual Feed Guide needs to be opened with the Second Paper Cassette Unit.

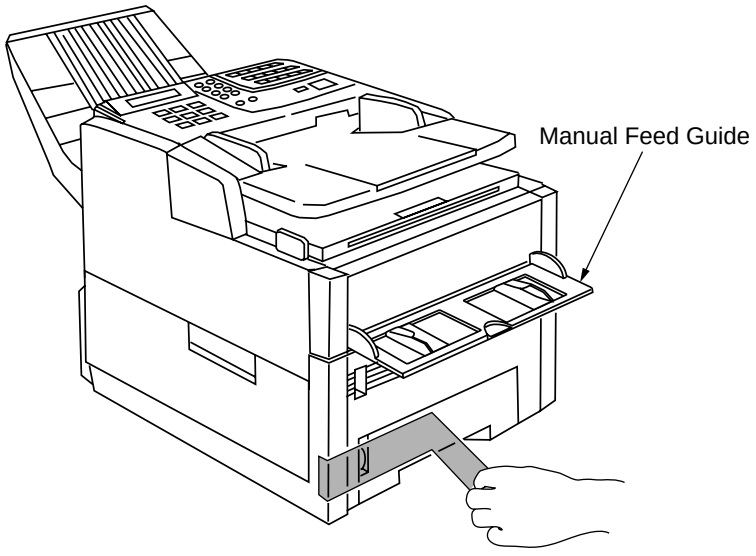

Figure 2.25

(5) Install the Second Paper Cassette. Approximately 500 sheets of recording paper (20-Ib bond) can be loaded.

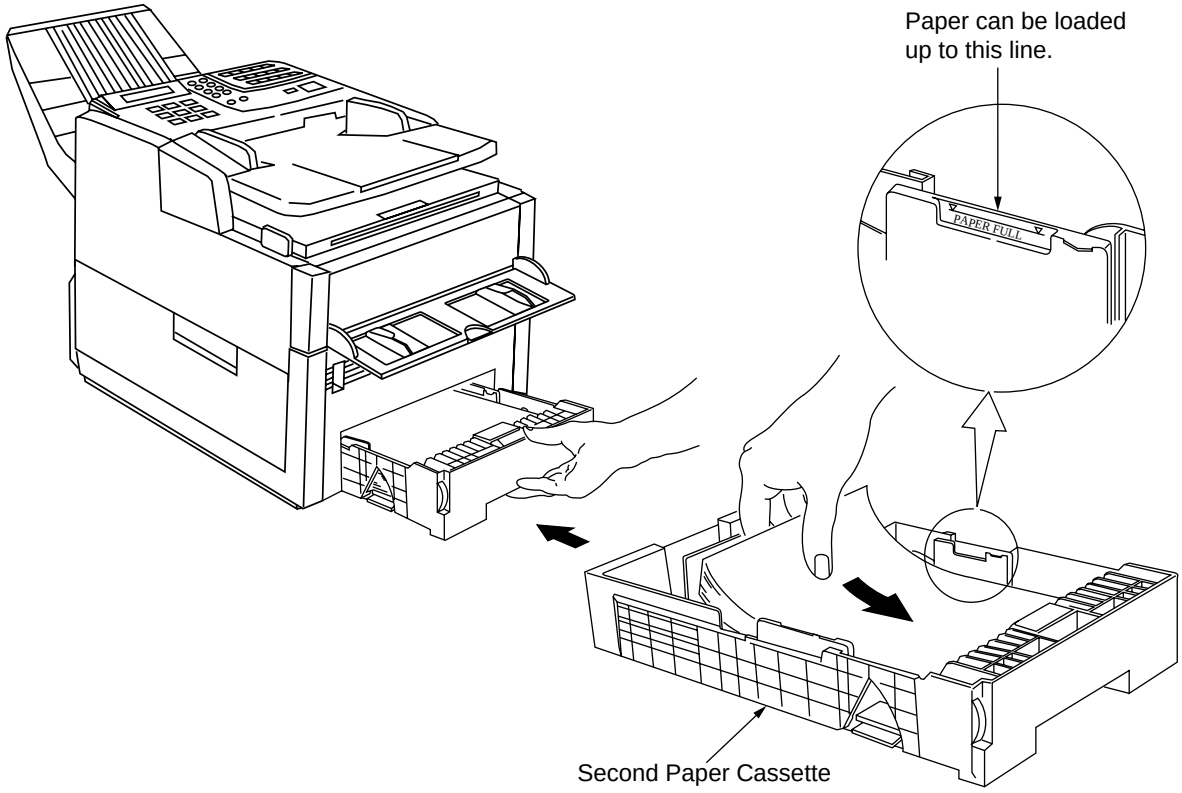

Figure 2.26

(6) Reconnect the power cord to the wall and the facsimile, and Turn the facsimile power on.

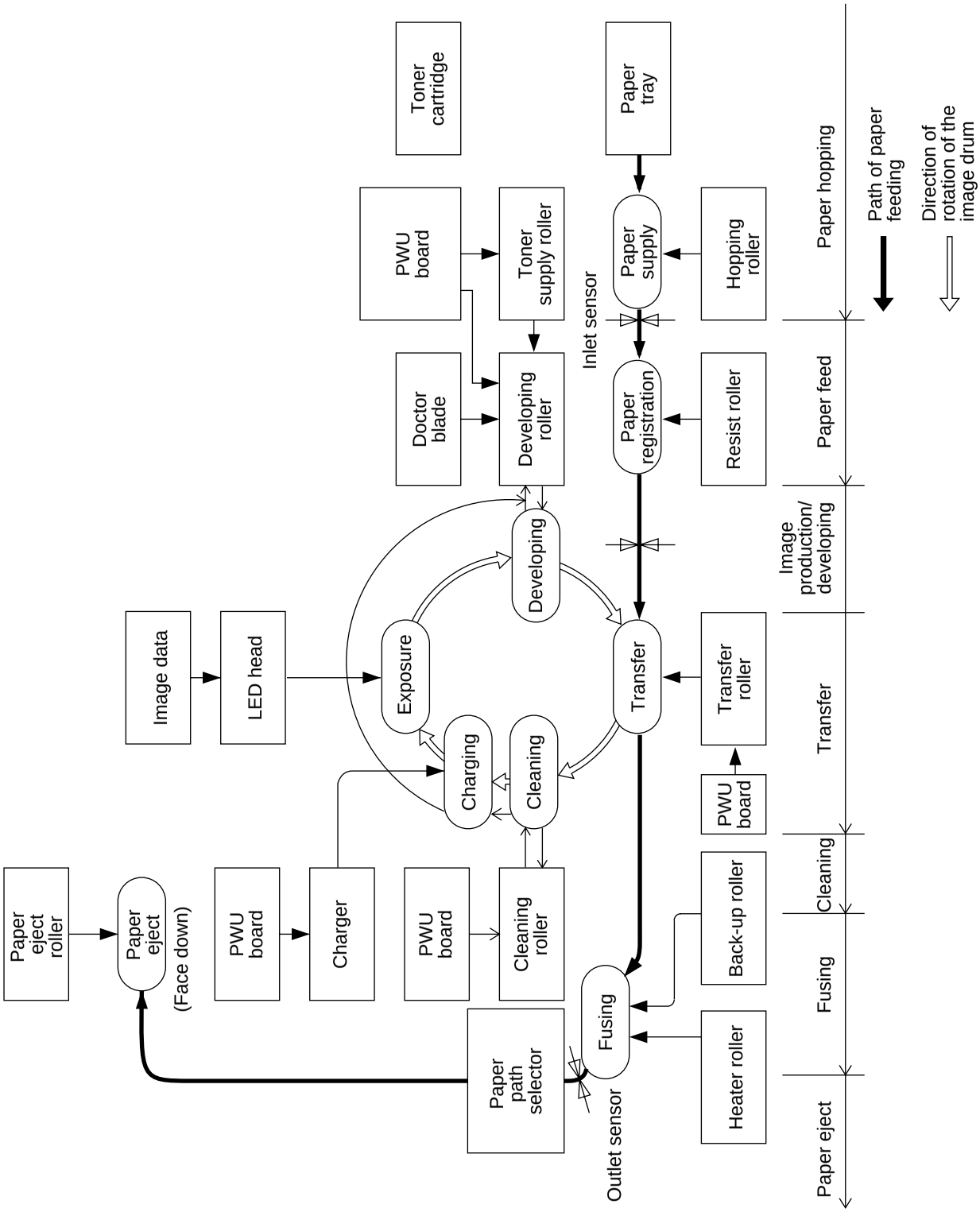

Figure 3.1 Electro-photographic Process Flow

3.1 Fundamentals of the Electro-Photographic Process

The electro-photographic process involves six sub-processes:
(1) Charging (2) Exposure (3) Development (4) Transfer (5) Fusing (6) Cleaning

Outline of each process is explained below.

Process	Illustration	Description
1 Charging	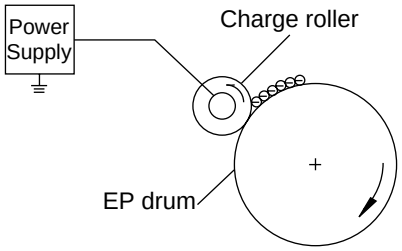	The surface of the electro-photographic Image drum is uniformly charged with negative charges by applying a negative voltage to the charge roller. When the applied DC voltage exceeds a threshold value, charging of the drum begins.
2 Exposure	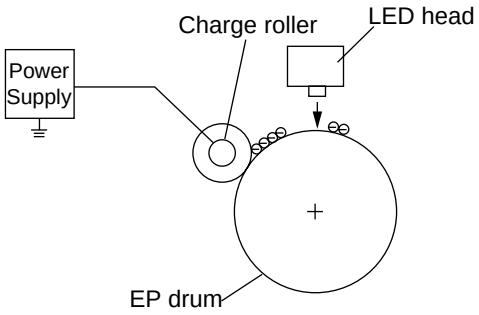	Light emitted from the LED head irradiates the negatively charged surface. The potential of the irradiated part of the Image drum surface is raised, so that an electrostatic latent image associated with the print image is formed.
3 Development	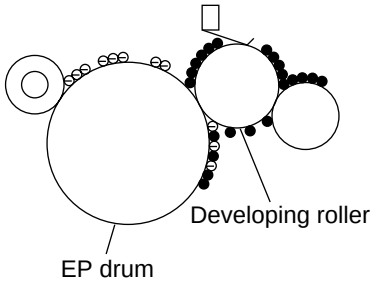	Toner is attracted to the exposed part (high-potential part) of the Image drum at the contact between the Image drum and the developing roller, making the electrostatic latent image visible. At the same time, the residual toner on

Process	Illustration	Description
4 Transfer	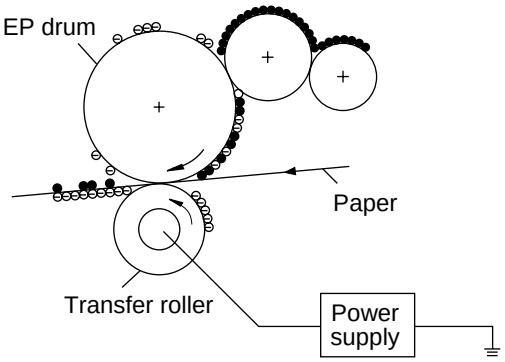	the Image drum is attracted to the developing roller by static electricity. The recording paper is placed over the Image drum surface and a positive charge, opposite in polarity to the toner, is applied to the reverse side of the paper from the transfer roller. The toner is attracted by the positive charge and is transferred to the paper. The toner charged negative that is attracted to the Image drum surface is transferred to the upper side of the recording paper by the positive charge on the lower side of the paper.
5 Fusing	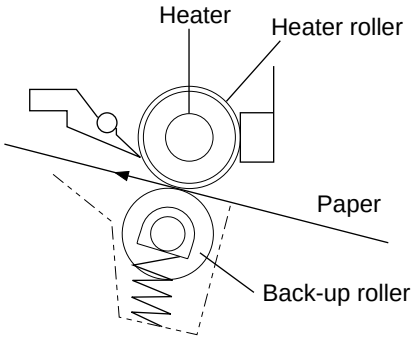	The unfused toner image is fused on the paper under heat and pressure as it passes between the heater roller and the back-up roller.
6 Cleaning	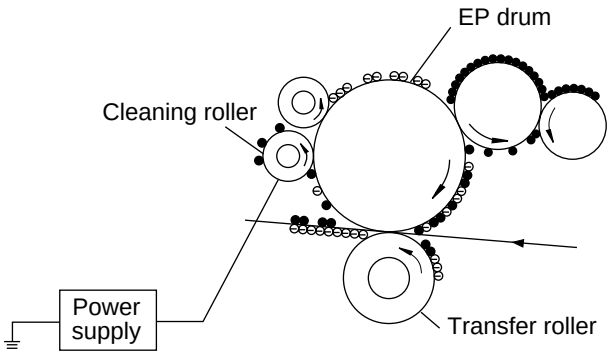	Residual toner on the Image drum is attracted to the cleaning roller temporarily by static electricity on the Image drum surface.

3.2 Actual Electro-photographic Process

The electro-photographic process consists of six essential processes.

The following Figure 3.2 provides a general description.

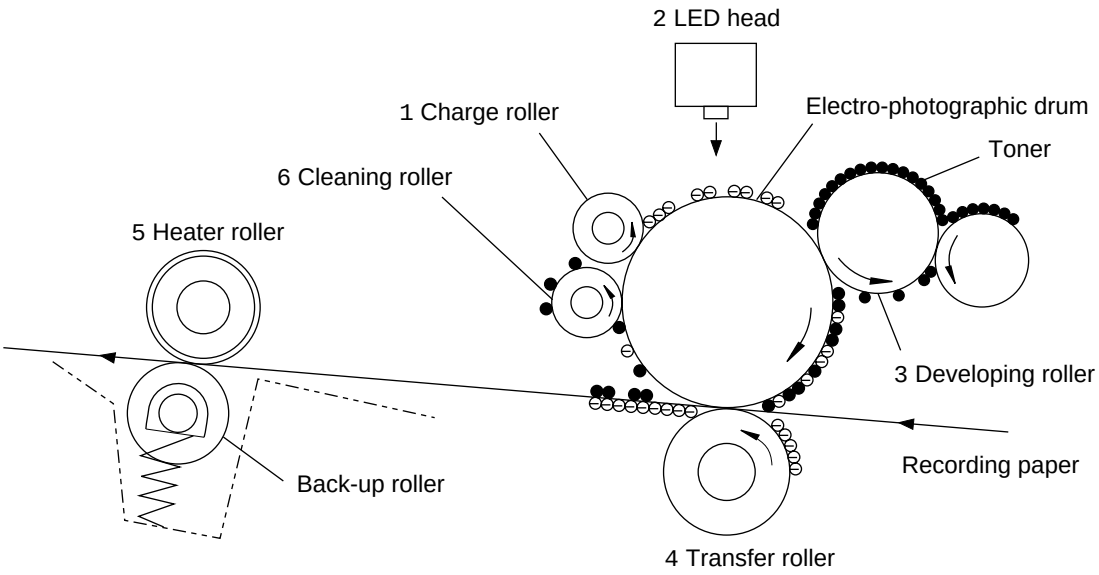

* Process:

1 : Charging
2 : Exposure
3 : Developing
4 : Transfer
5 : Fusing
6 : Cleaning

Figure 3.2 Actual EP Process

3.3 Boards and Units

3.3.1 Boards and Units

The following three boards, Memory board (option), Telephone interface board (option), PC interface board (option) and three units constitute facsimile transceiver machine.

• Main control board	MCNT:	(M60_)
• Network control unit board	NCU:	(EN9, INU)*
• Memory board (option)	MEM:	(MEM; 2/4MB)
• Telephone interface board (option)	TEL:	(TEL-U, TEL-W1, TEL-W2, TEL-W2D, NTIF, HOOK, 10 KEY,)
• PC interface board (option)	Bi-Centro I/F:	(CTT)
• 2nd tray interface board (option)	2ND TRAY I/F:	(TQSB)
• Operation panel assembly unit	OPE:	(P60)
• Power supply unit	POW UNIT:	(120V/230V)
• Printer unit		

Figure 3.3 shows the related drawing of the facsimile transceiver.

Note: The contact image sensor and electromagnetically driven parts compose the so-called Scan Unit.

* EN9 : UK, France, EC countries
  INU : US, Canada, Australia, New Zealand, Singapore, China, Malaysia, non-EC countries(Poland etc,)

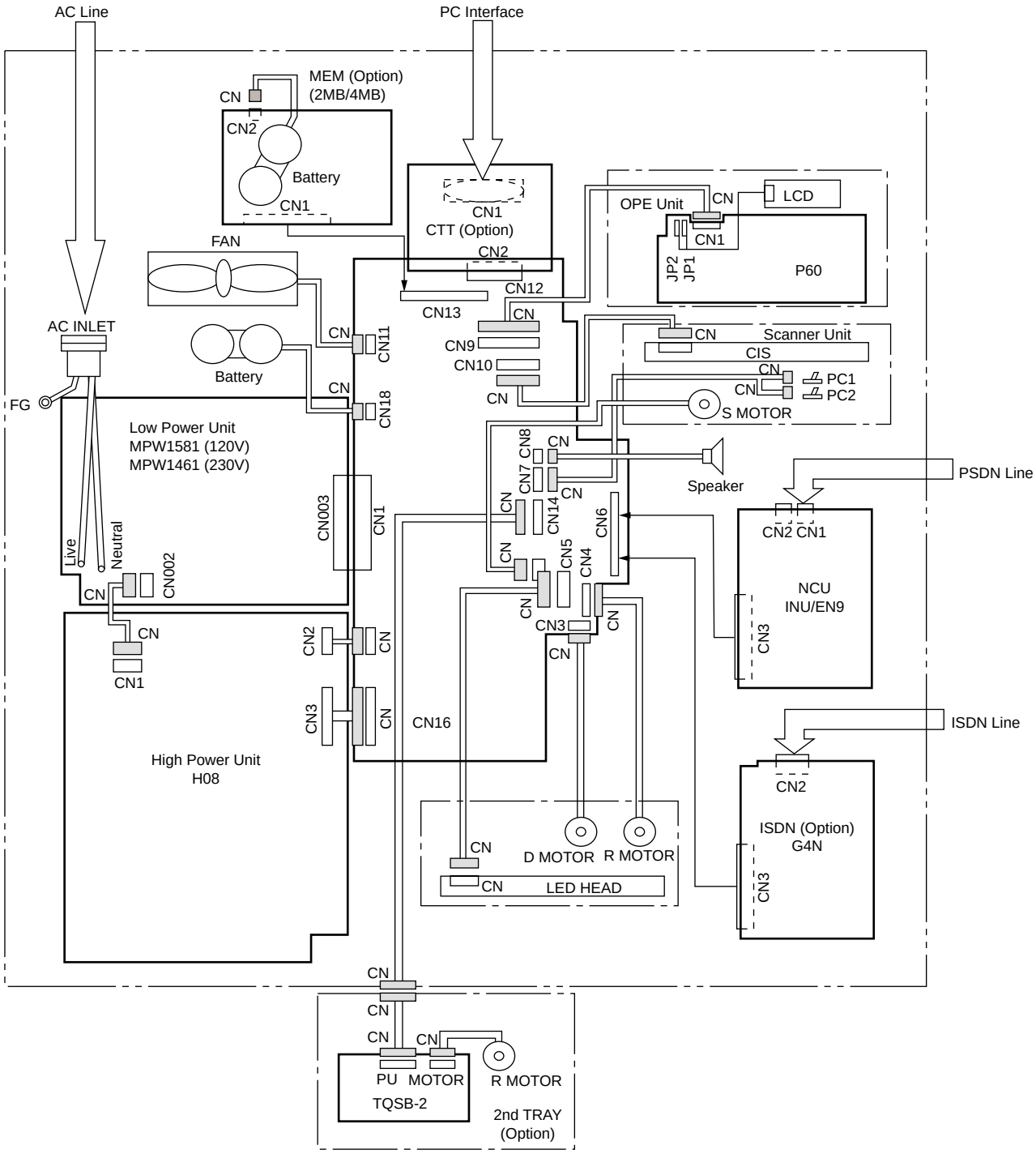

Figure 3.3 Related drawing

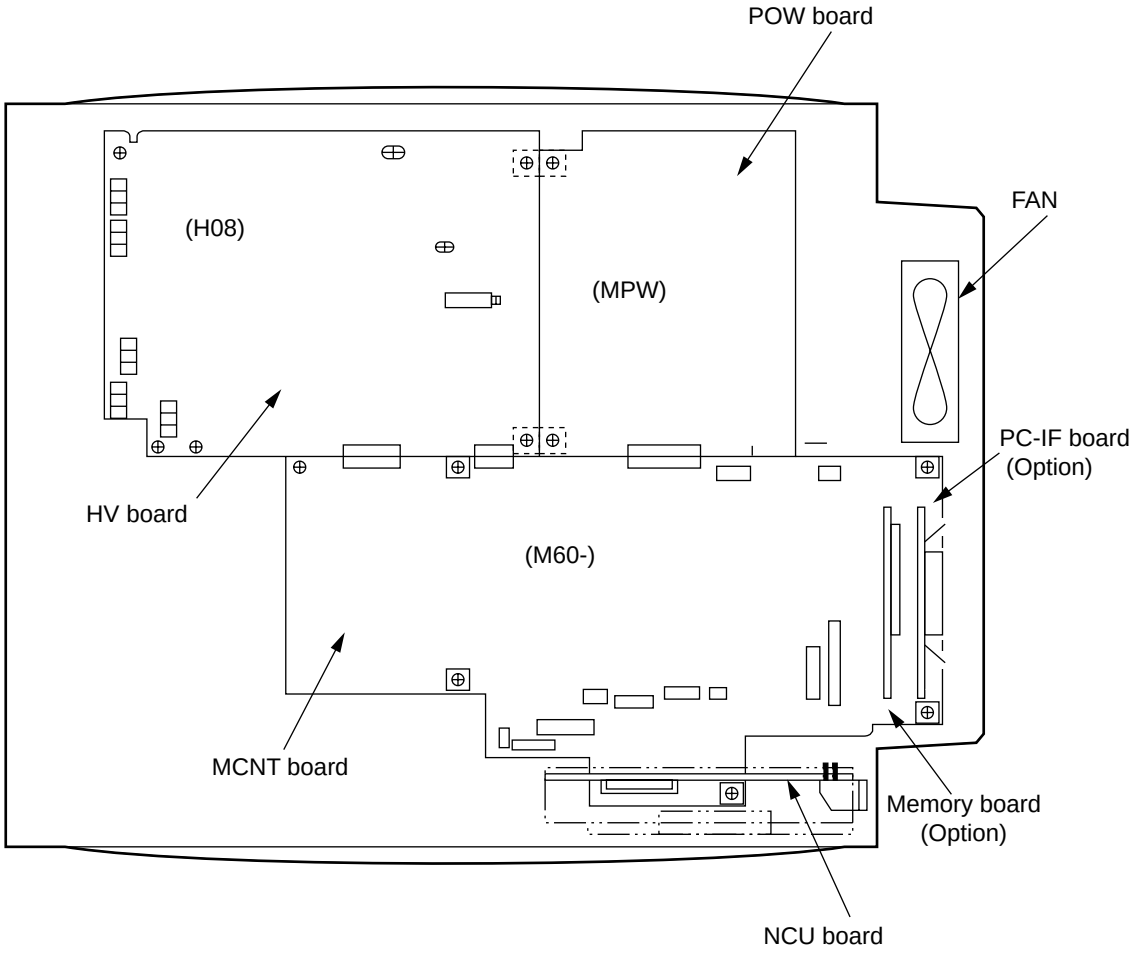

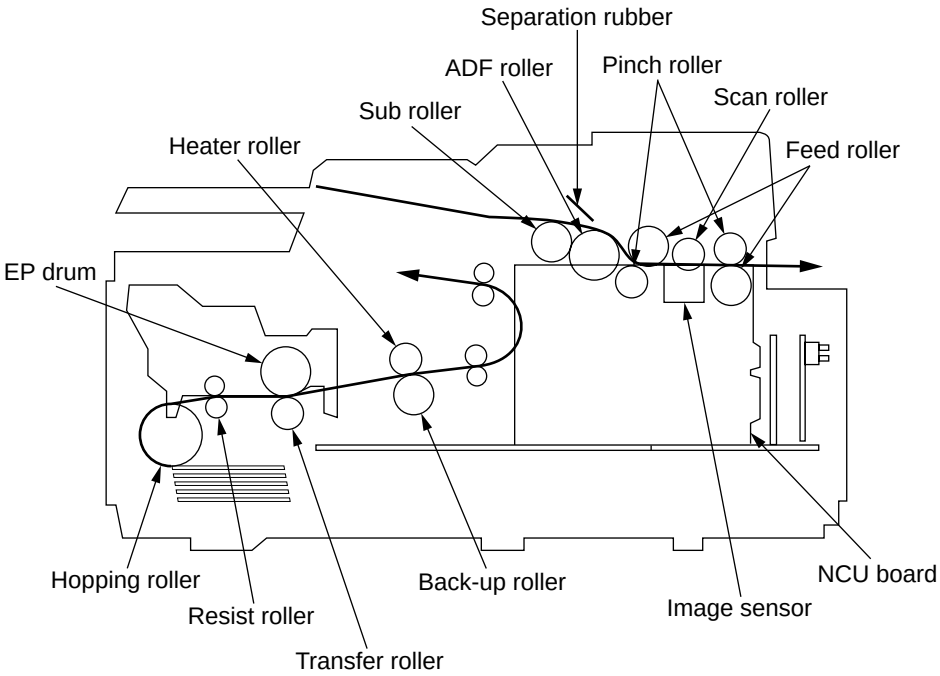

Figure 3.4 Overall Dimension and Mechanical Structure

4. MECHANICAL DISASSEMBLY AND REASSEMBLY

This chapter explains the procedures for replacement of assemblies and units in the field.

The section explains the procedures for replacement of parts, assemblies, and units in the field. Only the disassembly procedures are explained here. For reassembly, reverse the disassembly procedure.

4.1 Precautions for Parts Replacement

DANGER

Do Not
Touch !

HIGH VOLTAGE

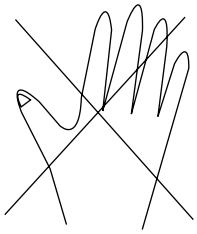

You may be subjected to high-voltage electric shock by touching the following parts without an insulating material:

a. High-voltage unit PC board
b. Low-voltage PC board
c. Contact ass'y
d. Power supply unit

* The high voltage risk may continue for about 3 days after power-off.
* Never touch the power supply unit pattern.

(1) Before starting to replace parts, remove the AC cord.

(a) Remove the AC cord in the following sequence:
1. Turn off ("o") the power switch of the machine.
2. Disconnect the AC inlet plug of the AC cord from the AC receptacle.
3. Disconnect the line cable from the machine.

(b) Reconnect the machine in the following procedure:
1. Connect the AC cord and line cable to the machine.
2. Connect the AC inlet plug to the AC receptacle.
3. Turn on ("I") the power switch of the machine.

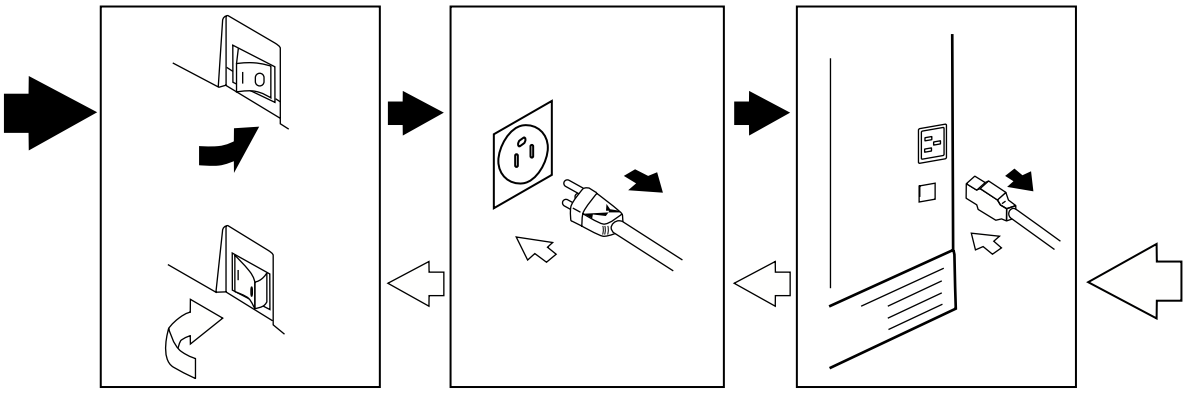

(2) Do not try to disassemble as long as the facsimile is operating normally.

(3) Do not remove unnecessary parts: Try to keep disassembly to a minimum.

(4) When disassembling, follow the prescribed sequence. Otherwise, parts may be damaged.

(5) Since screws and small parts are likely to be lost, they should temporarily be attached to their original positions.

(6) When handling items such as printed circuit boards, do not wear gloves that are likely to generate static electricity.

(7) Using a wrist band connected to the ground will protect semiconductors on printed circuit boards from damage by the static electricity.

(8) Do not place printed circuit boards directly on the equipment or on the floor.

(9) Remove the I/D unit (image drum)
-Lift the document table into an upright position.
-Push in the cover release buttons on the side of the copy stacker.
-Lift the copy stacker.
-Take out the I/D unit from the equipment.

Caution: Do not expose the I/D unit to direct sunlight. To protect the I/D unit against room lights, cover it with A4-size paper or the like.

Board or Part		Adjustment
(a)	NCU board	DIP switches to be placed in the same position as on the removed board. Refer to Chapter 8.

Note: The DIP switches setting is subject to change by PTT parameters.
EN9 and INU board (Except for USA/Canada version)

(b)	LED print head	When the rank marking of the replaced LED print head (new part) is the same as that of the used LED print head (old part), you do not always have to set the LED print head strobe time by the technical function No. 26. (Refer to Chapter 5)

4.2 Tools

Table 4.1 shows the tools required for the replacement of parts such as circuit boards and mechanical units.

Table 4.1 Tools

No.	Service tools		Q'ty	Remarks
1	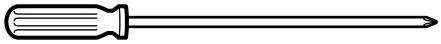	Philips screw driver (L)	1	
2		Philips screw driver (M)	1	
3	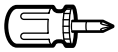	Philips screw driver (S)	1	
4	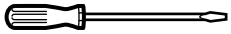	Flat screw drivers (S)	1	
5		Philips screw driver (S)	1	
6	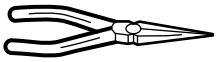	Radio pliers	1	
7		Nippers	1	
8	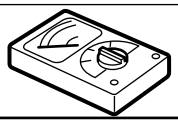	Multimeter	1	Short-ciucuit test

4.3 How to Disassemble and Reassemble

This section explains how to disassemble and reassemble the fax.

- Figure 4.1 shows the disassembly procedure flow as generalization.

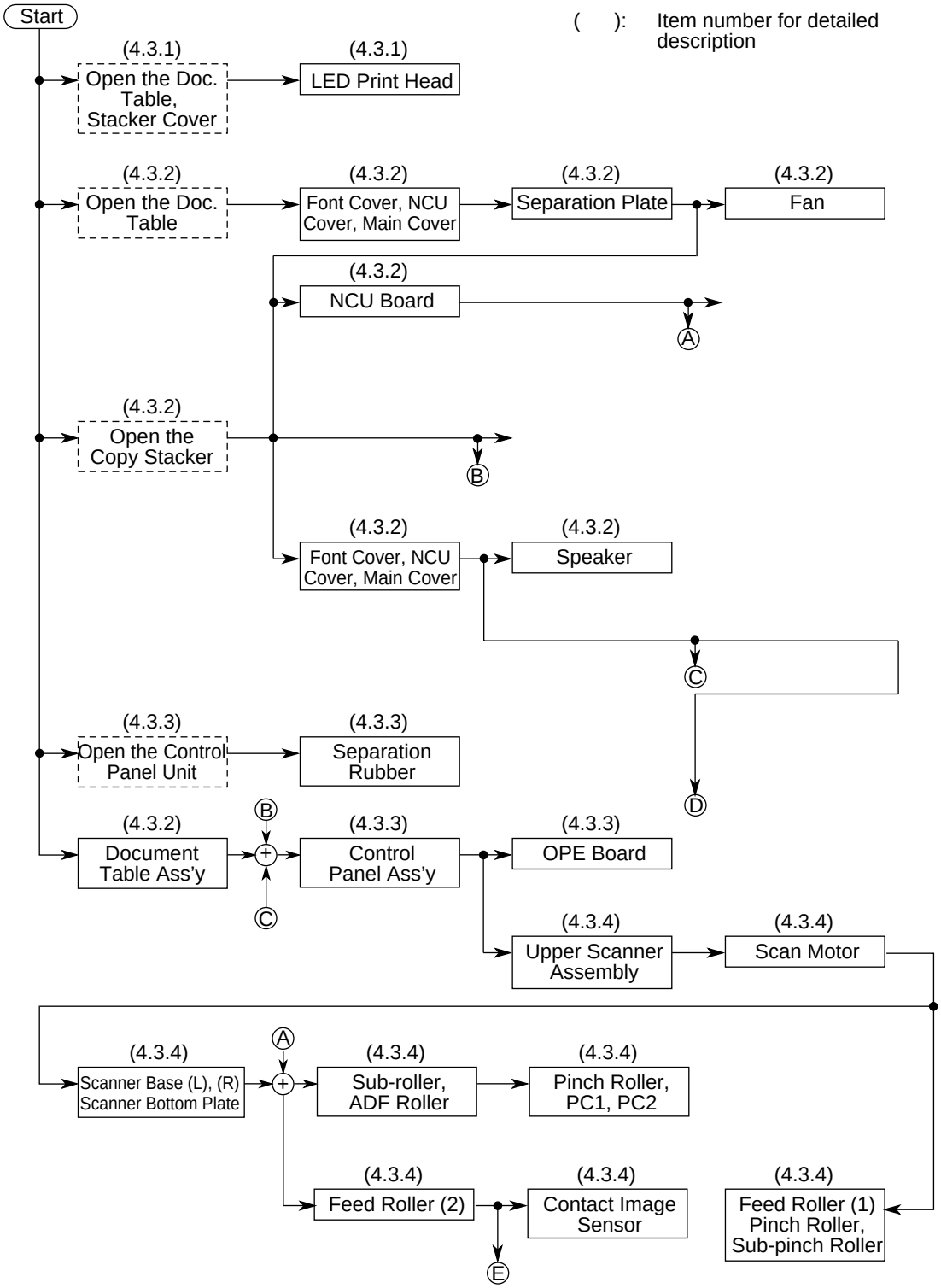

Figure 4.1 (1/2) Disassembly Procedure Flow

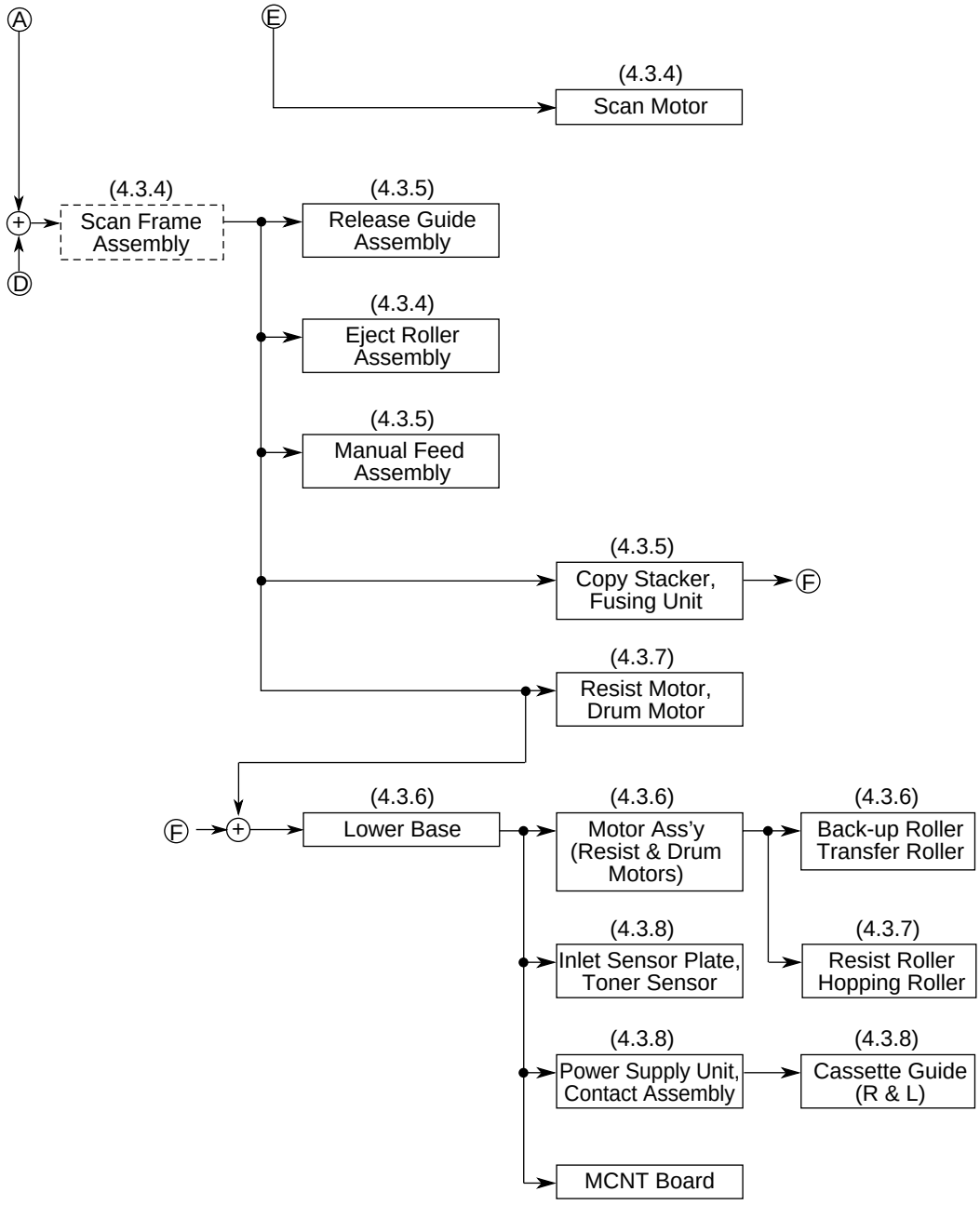

Figure 4.1 (2/2) Disassembly Procedure Flow

- The detailed disassembly procedure is explained from sub-section 4.3.1 to 4.3.8.

4.3.1 LED Print Head

It is used two kind of head as the LED print head. (208 mm width or 216 mm width)

(1) Disassembly procedure

a) Open the Document Table assembly.

b) Open the Stacker Cover by pushing the Buttons.

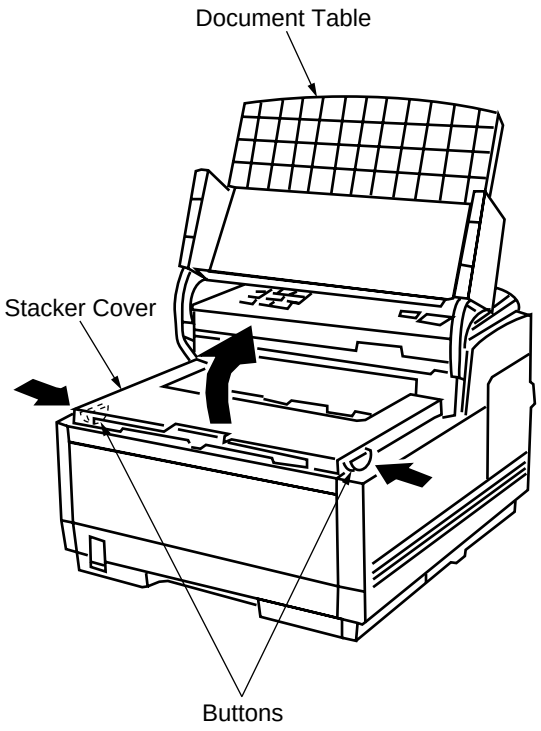

c) Disconnect the PC connector from the LED print head.

d) Disconnect the flat cable from the PC connector.

e) Remove the LED print head while spreading the retainer on the Stacker Cover.

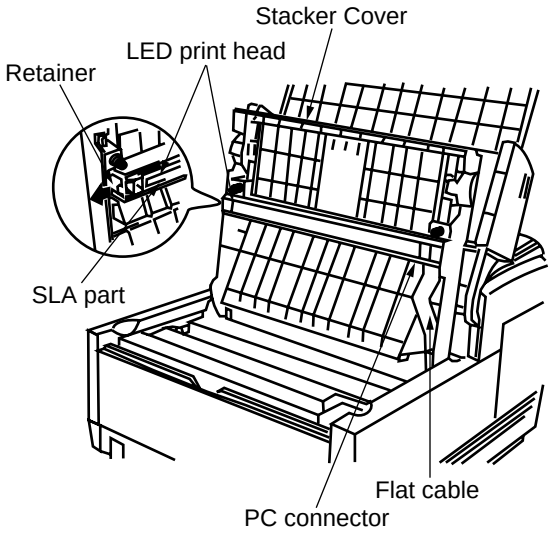

Note: Be sure not to touch directly or push the SLA part of the LED print head.

(2) Reassembly procedure

Reverse the disassembly procedures.

Note: After replacing the LED print head, set drive time of the LED print head following the marking. (Refer to section 5.1).

4.3.2 ID Unit, Rear Cover, NCU Cover, Main Cover, Separation Plate, NCU Board, Modem Board

(1) Disassembly procedure

1) ID Unit, Rear Cover, NCU Cover, Main Cover

a) Open the Document Table assembly.

b) Open the stack cover by removing the buttons.

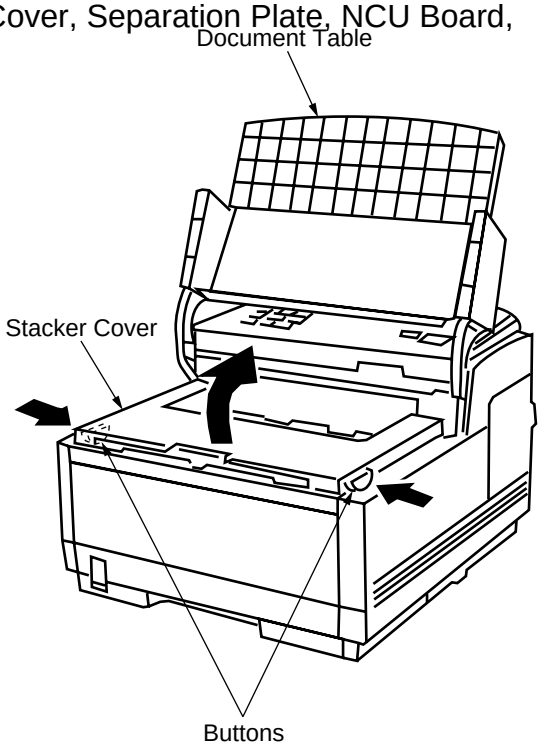

c) Take out the ID Unit from the equipment.

d) Remove the two screws 1.

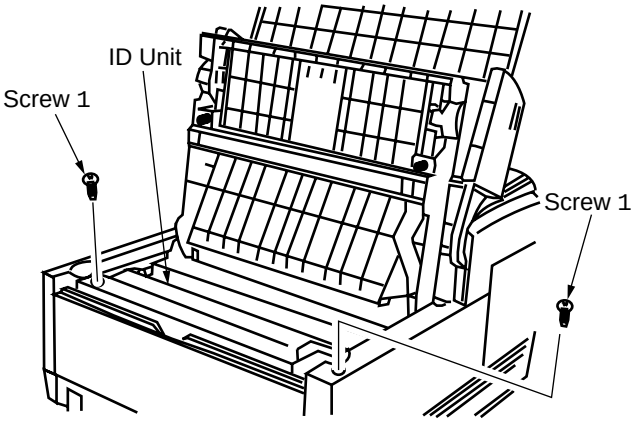

e) Remove the Rear Cover by removing the two screws 2.

f) Remove the NCU Cover by removing the screws 3.

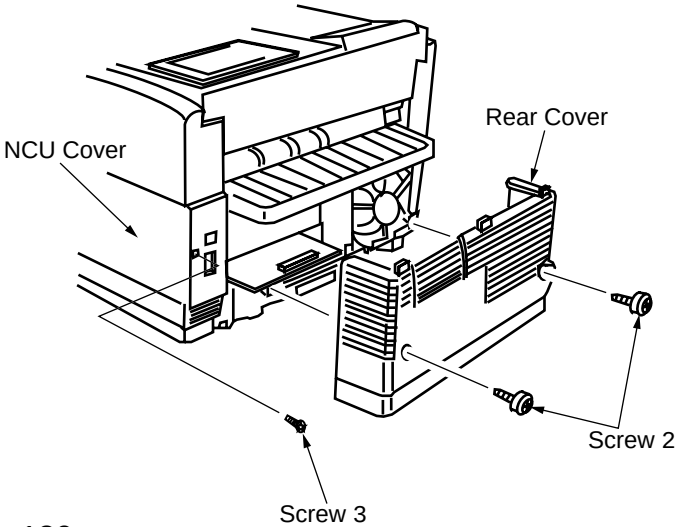

g) First, open the Main Cover from the front side, and then, remove the Main Cover by removing the nails at both sides on the rear side.

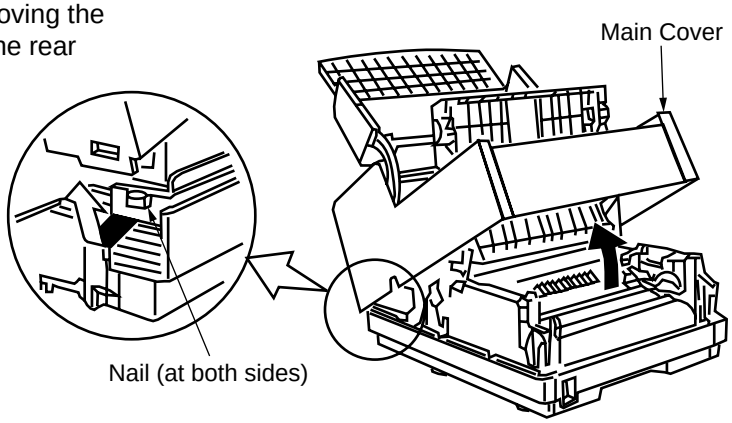

2) Separation Plate

a) Remove the Separation Plate by removing the two screws 4.

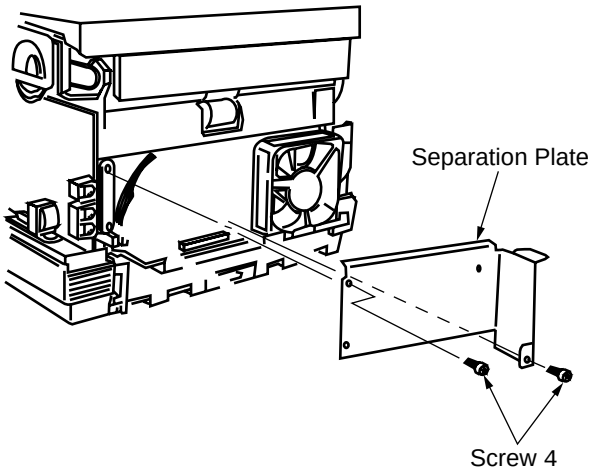

3) NCU Board, MODEM Board

Remove the NCU Board by removing the two screws 5.

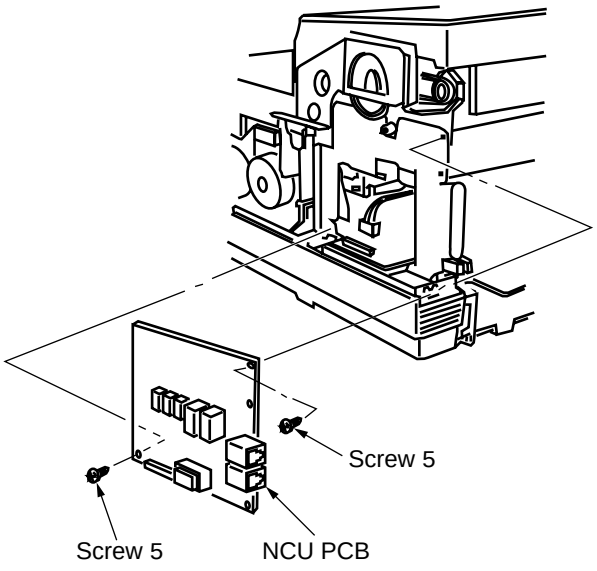

(2) Reassembly procedure

Reverse the disassembly procedures.

4.3.3 Control Panel Assembly, Paper Guide (U) Assembly

(1) Disassembly procedure

1) Control Panel Assembly and Paper Guide (U) Assembly

   a) First, carry out the disassembly procedure up to the point of the 4.3.2 (Main Cover, NCU Cover and Rear Cover).

   b) Remove the ground cable by removing the screw 1.

   c) Disconnect the connector of the Control Panel from the MCNT Board.

   d) The removal of the two screws 2 results into two separate assemblies:
   Control Panel Assembly and Paper Guide (U) Assembly.

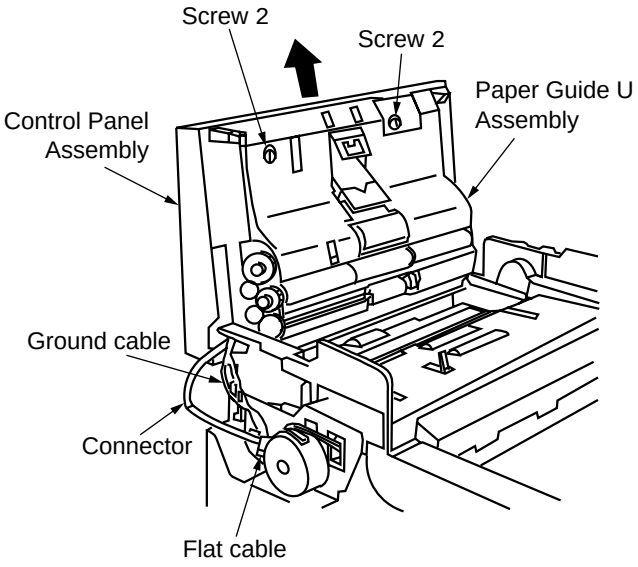

2) Control Panel Assembly

   a) Remove the OPE Board by removing the 10 small screws 3 and the part of the fixing hooks (8).

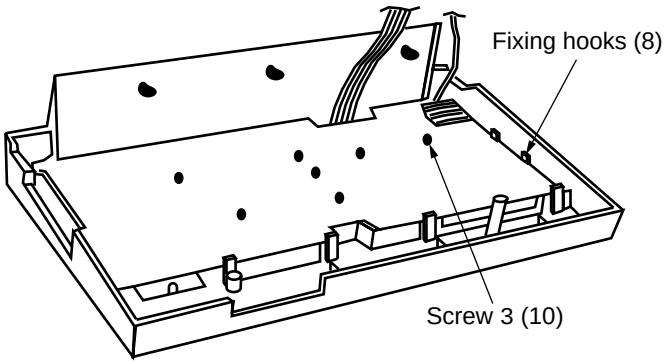

   b) Remove the part of LCD by removing the two screws 4.

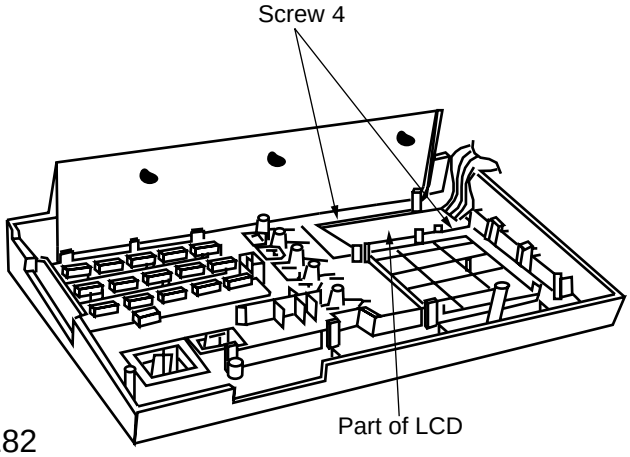

3) Paper guide (U) Assembly

a) Separation Rubber

a. The Separation Rubber can be removed from the Paper Guide (U) Assembly.

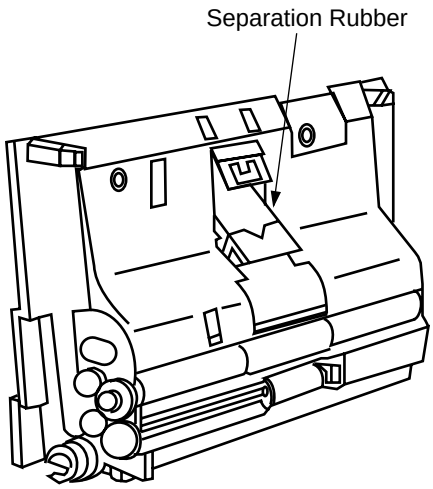

b) Feed Roller

a. Remove the ground cable by removing the two screws 5.

b. Remove the Feed Roller by removing the gear and ADF bearings.

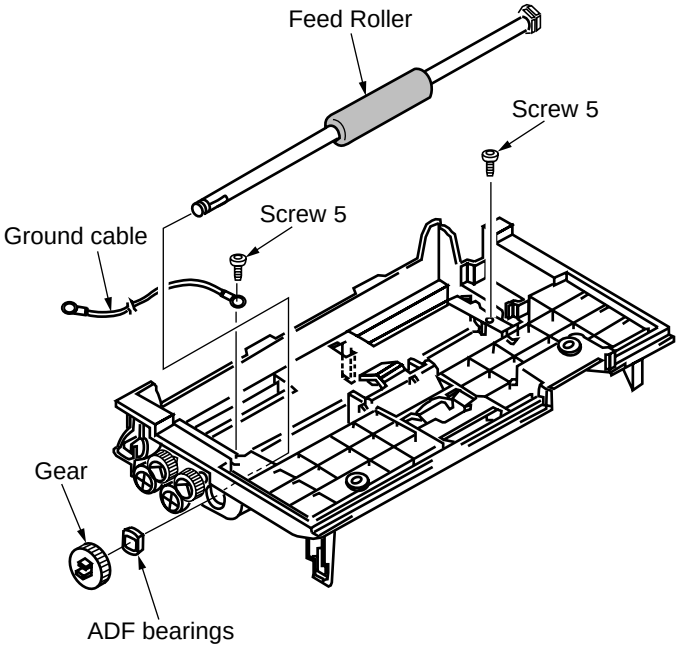

c) Scan Roller
Remove the Scan Roller by removing the gear and ADF bearing.

d) Exit Roller
Remove the Exit Roller while spreading and holding up the part of the fixing hooks.

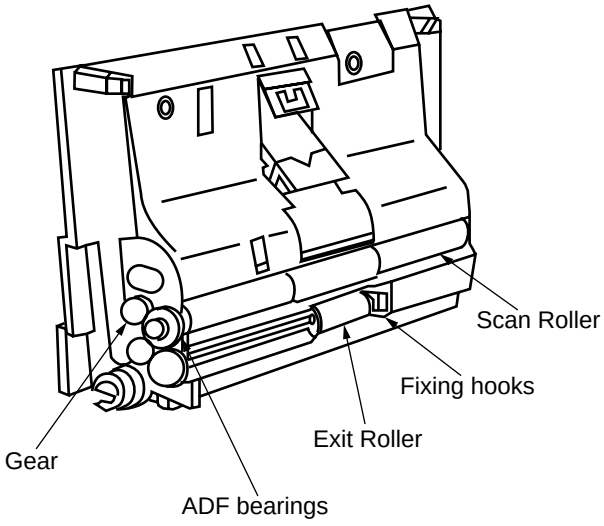

Note: Be careful as not to break the shaft of the Exit Roller when removing.

(2) Reassembly procedure

Reverse the disassembly procedures.

4.3.4 Sub-roller, ADF Roller Assembly, Pinch Roller, Contact Image Sensor, Document Detectors (PC1 and PC2).

(1) Disassembly procedure

1) Scanner Unit

a) First, carry out the disassembly procedure up to the point of the 4.3.2 (Rear Cover and Main Cover) and 4.3.3 (Control Panel Assembly and Paper Guide (U) Assembly).

b) Disconnect the connector from the MCNT Board and the AC inlet from the scanner frame.

c) Remove the Scanner Unit by removing the three screws 1.

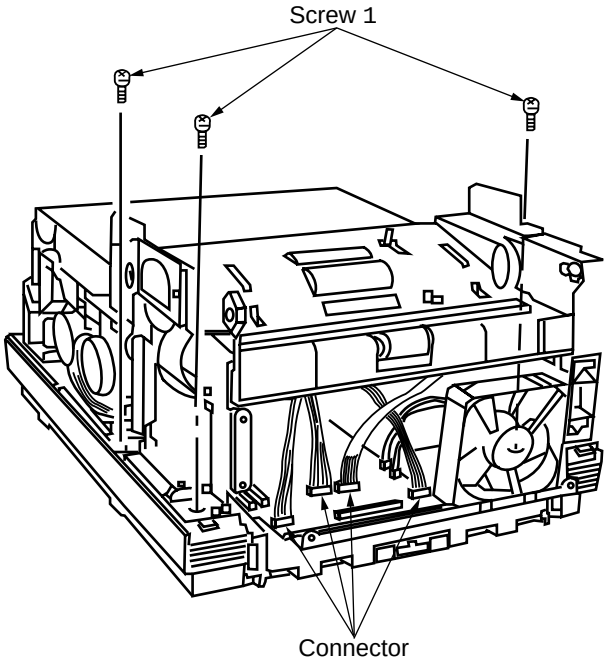

2) Scanner Motor

a) Remove the Scanner Motor by removing the two screws 2.

3) Scanner Frame

a) Remove the Scanner Frame by removing the three screws 3.

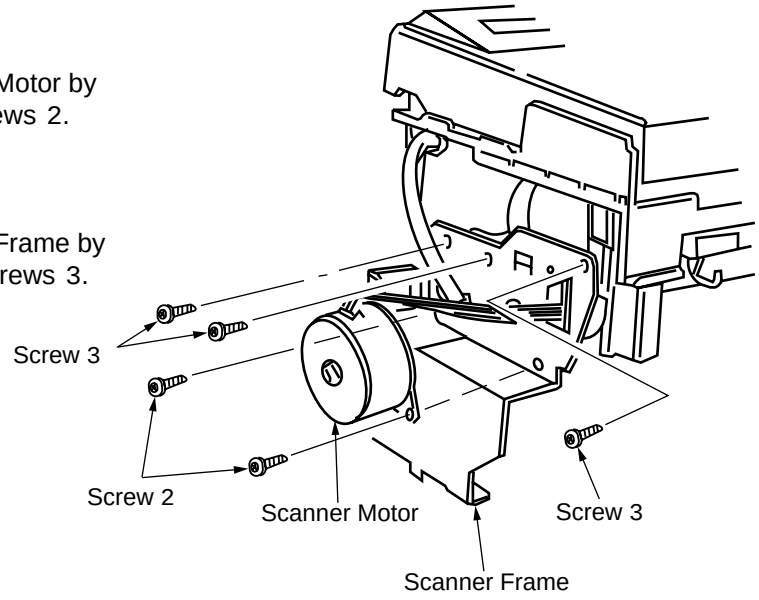

4) Sub-roller, ADF roller assembly, Pinch Roller, Contact Image Sensor

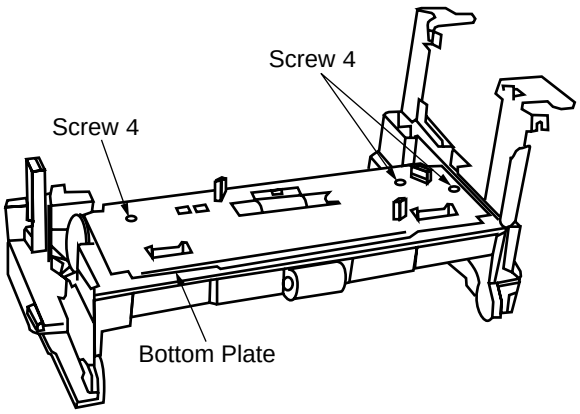

- Turn the Scanner Frame Assembly inside out and perform the disassembly procedure.

  a) Remove the Bottom Plate by removing the three screws 4.

  b) Remove the Sub-roller from the Scanner Frame.

  c) Remove the Earth Plate 1 from the Scanner Frame.

  d) Remove the ADF Roller Assembly by removing the gear on the Scanner Frame.

  e) After removing the ADF Roller, remove the Pinch Roller by holding up the two springs 2 while the Pinch Roller Shaft is pushed and released.

  f) Remove the Contact Image Sensor by disconnecting the connector.

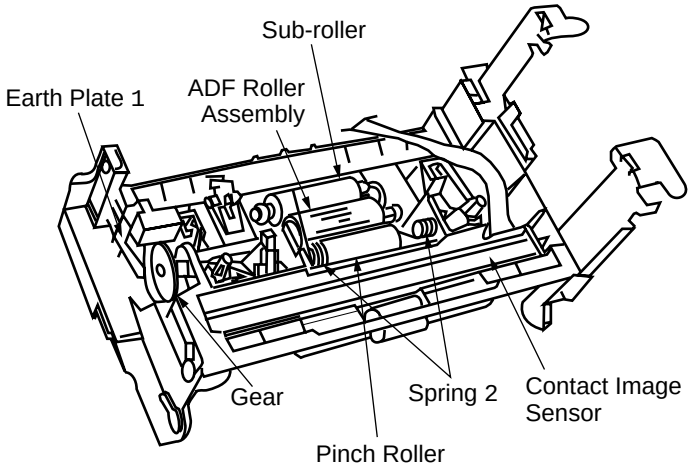

5) PC1, PC2

  a) After disconnecting the two connectors, remove the photocoupler sensors PC1 and PC2 on the Bottom Plate by pressing the latch using the flat screwdriver or the like.

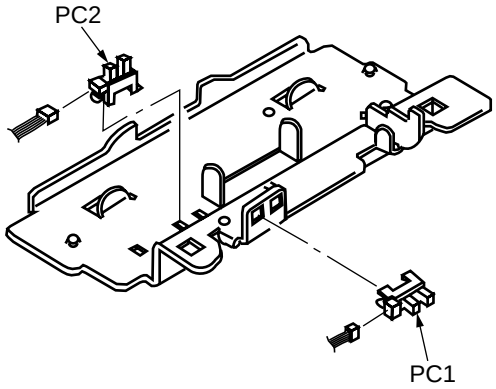

(2) Reassembly procedure

Reverse the disassembly procedure.

4.3.5 Resist Motor, Drum Motor, Release Guide Assembly, Manual Guide Assembly, Stacker Cover, Fusing Unit

(1) Disassembly procedure

- First, carry out the disassembly procedure up to the point of the Scanner Unit Assembly removal (Refer to Sub-section 4.3.4.)

1) Resist Motor and Drum Motor

a) Remove the Resist Motor by removing the two screws 1.

b) Remove the Drum Motor by removing the two screws 2.

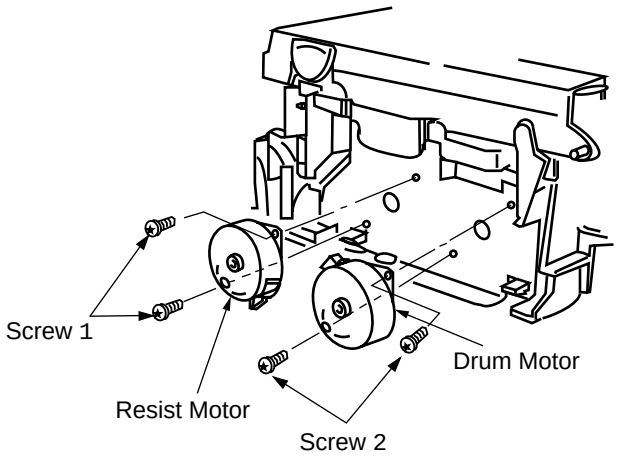

2) Release Guide Assembly

a) Remove the Release Guide Assembly by removing the Release Spring.

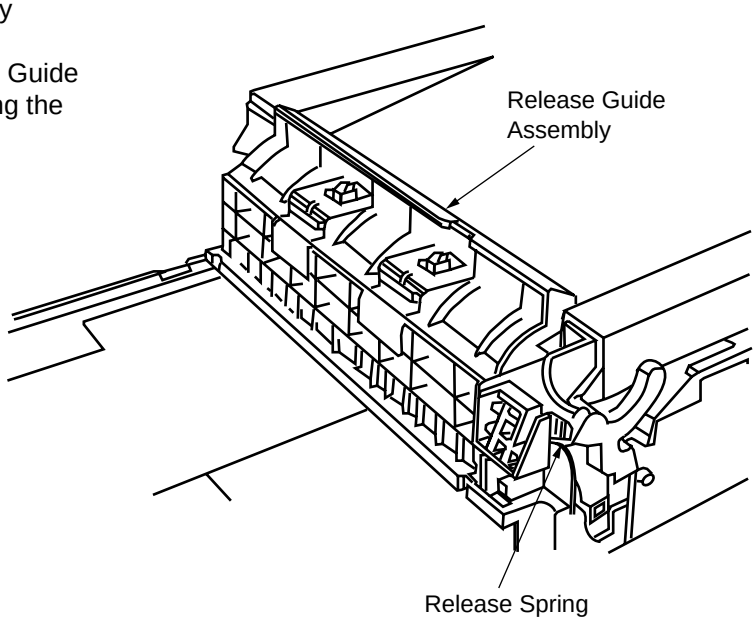

3) Stacker Cover

a) Disconnect the flat cable.

b) Remove the Stacker Cover by pressing inward the two latches on it from the two reset levers.

c) Remove the Stacker Cover by spreading it from the lower base.

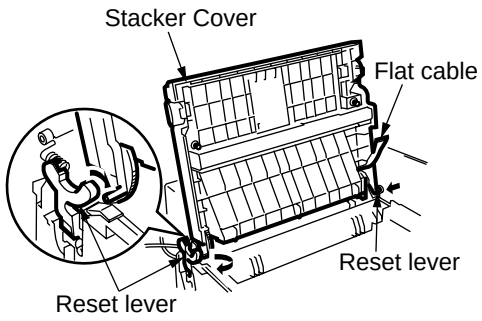

4) Fusing Unit

a) Remove the Fusing Unit by removing the four screws 2.

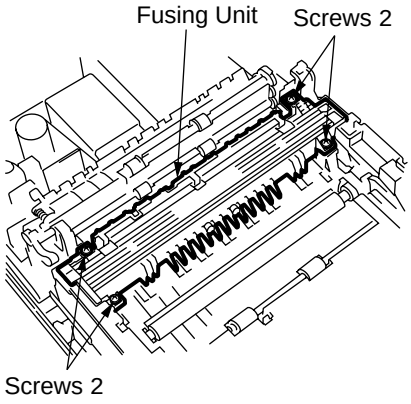

5) Manual Feed Assembly

a) First, carry out the disassembly procedure up to the point of Main Cover removal. (Refer to sub-section 4.3.2)

b) Remove the Manual Feed Assembly by pressing inward the two retainers.

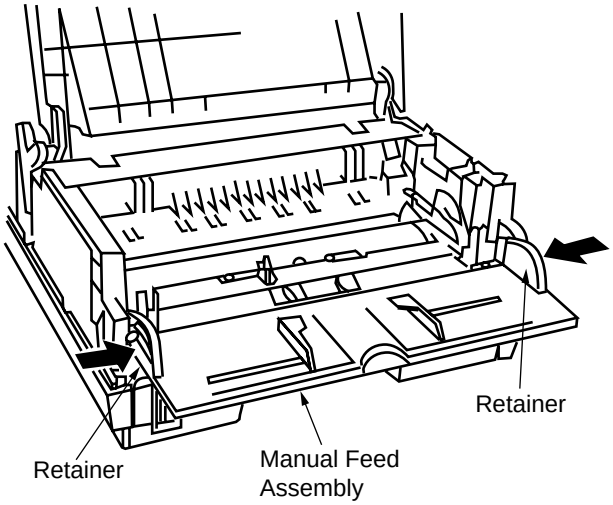

(2) Reassembly procedure

Reverse the disassembly procedures.

4.3.6 Lower Base, Motor Assembly, Back-up Roller, Transfer Roller

(1) Disassembly procedure

1) Lower Base, Motor Assembly

a) First, carry out the disassembly procedure up to the point of the Fusing Unit removal.
(Refer to sub-item 4.3.5.)

b) Disconnect the two connectors (CN3 and CN4 on the MCNT board).

c) Remove the Lower Base by removing the seven screws 1 to 3 .

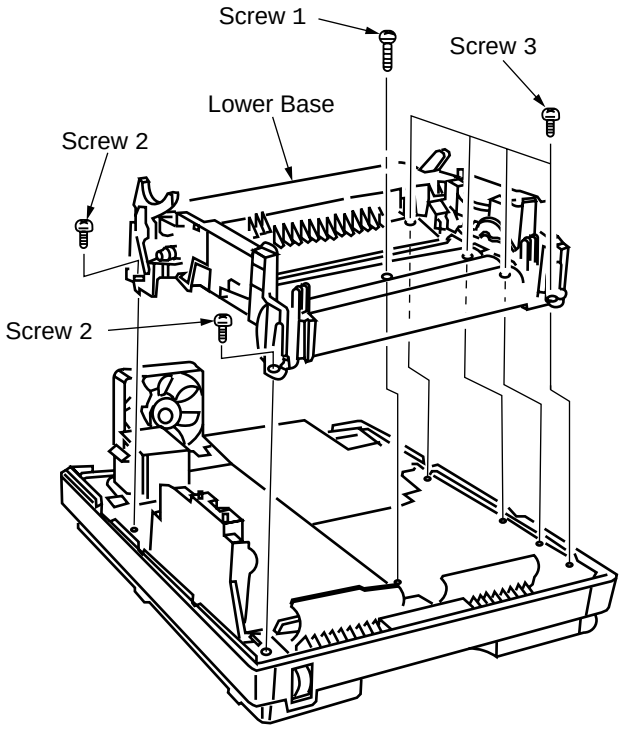

d) Press up and hold the two latches while removing the Motor Assembly out.

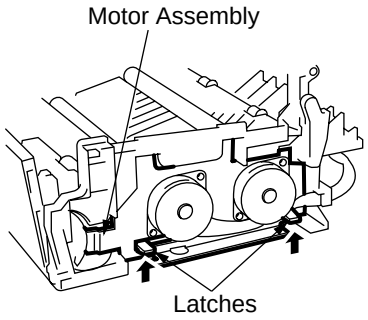

2) Back-up Roller, Transfer Roller

a) After removing the Lower Base, remove the spring.

b) Lift the left side of the Back-up Roller and pull it out leftwards.

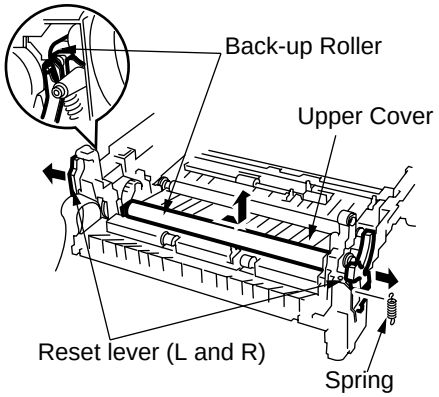

c) Release the gear by unlocking the latch on the Lower Base.

d) Lift the right side of the Transfer Roller and shift rightwards, then pull it out from the Lower Base.

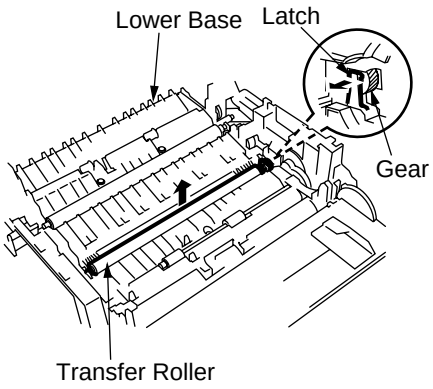

(2) Reassembly procedure

Reverse the disassembly procedures.

4.3.7 Resist Roller, Hopping Roller, Sensor Plates

(1) Disassembly procedure

1) Resist Roller, Hopping Roller

a) First, carry out the disassembly procedure up to the point of the Lower Base removal.
(Refer to sub-item 4.3.6.)

b) Remove the One-way Clutch Gear.

c) Press the Resist Roller to the right side and lift up the left side of it, then take off the Resist Roller.

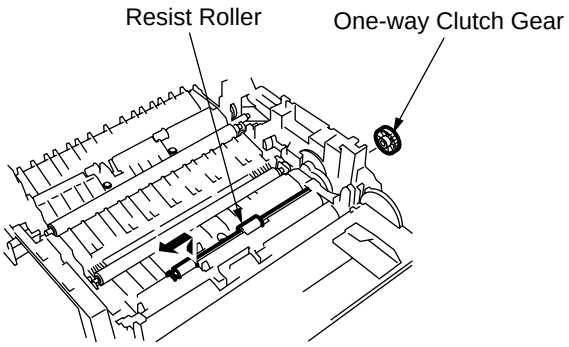

d) Remove the One-way Clutch Gear and Bearing.

e) Remove the Hopping Roller by sliding to the right side.

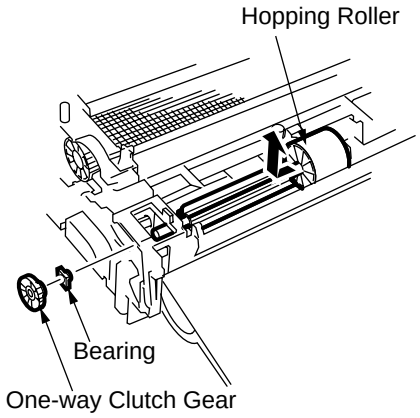

2) Sensor Plates (Inlet, Outlet), Toner Sensor

a) After removing the Lower Base, remove the Sensor Plate by pressing and holding the latches while shifting the Sensor Plate up and out.

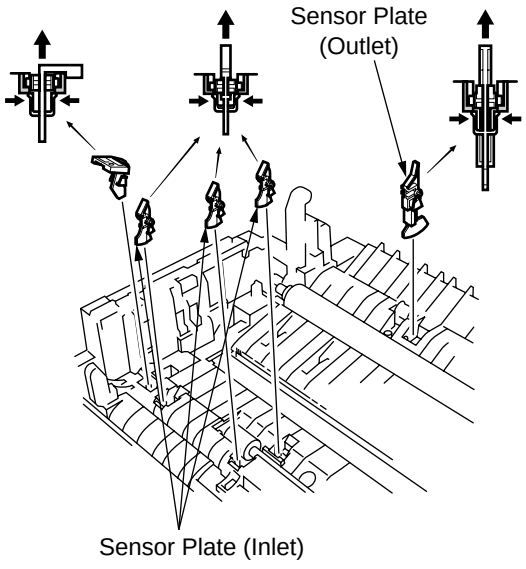

b) Press and hold the Clutch while pushing the Toner Sensor up and out.

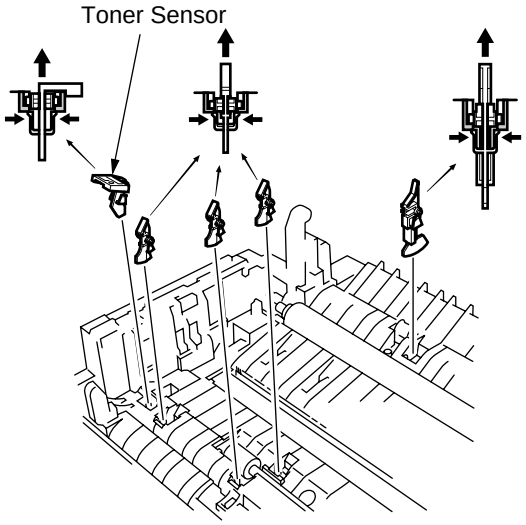

(2) Reassembly procedure

Reverse the disassembly procedures.

4.3.8 MCNT Board, Power Supply Unit, Contact Assembly

(1) Disassembly procedure

- First, carry out the disassembly procedure up to the point of the Printer Unit removal. (Refer to sub-section 4.3.6.)

  Note: MCNT board is shown below.

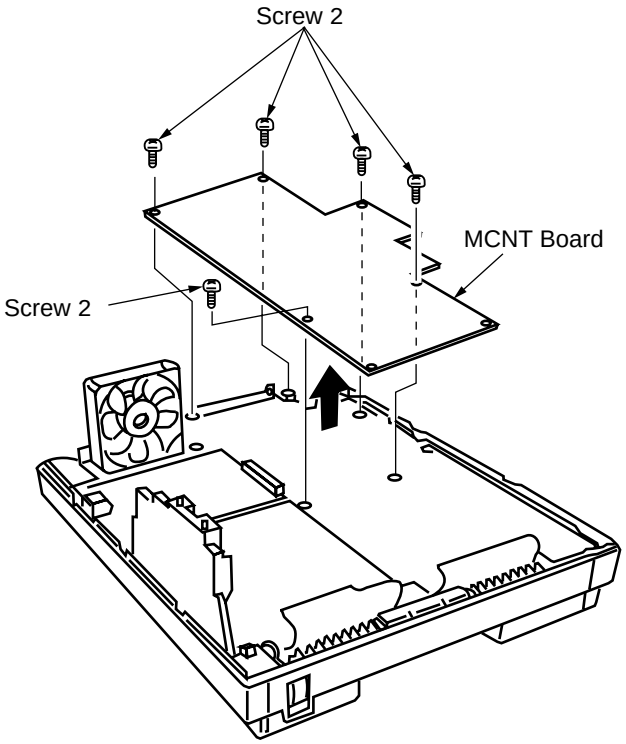

1) MCNT Board

   a) Remove the MCNT Board by removing the five screws 2.

2) Power Supply Unit and Contact Assembly

   a) Remove the Power Supply Unit by removing the four screws 3.
      Note: Power Supply Unit consists of HV board and POW board jointed by Support Bracket.

   b) Separate the Power Supply Unit from the Contact Assembly.

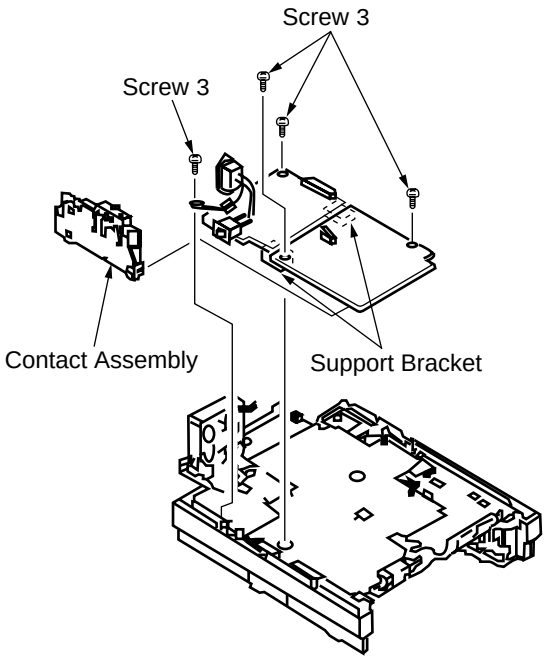

(2) Reassembly procedure

Reverse the disassembly procedures.

5. ADJUSTMENTS

5.1 Setting of LED Print Head Drive Time

- Adjustment point: Technical Function No. 26.

* To bring the LCD up to Technical Function, press SELECT FUNCTION key once, COPY key twice and "2" key (In case of no message in memory).

Note: When the rank marking of the replaced LED print head (new part) is the same as that of the used LED print head (old part), you do not always have to set the LED print head drive time.

Adjustment:

1) Turn AC power ON.
2) Setting of LED print head should be according to the Table 5.1 below:

Table 5.1 Setting of Technical Function No. 27

Setting / Rank Marking	MSB ↕ LSB																														
		0	0	0	0	0	0	0	0	0	0	0	0	0	0	0	1	1	1	1	1	1	1	1	1	1	1	1	1	1	1
		0	0	0	0	0	0	0	0	1	1	1	1	1	1	1	0	0	0	0	0	0	0	0	1	1	1	1	1	1	1
		0	0	0	0	1	1	1	1	0	0	0	0	1	1	1	1	0	0	0	0	1	1	1	1	0	0	0	0	1	1	1	1
		0	0	1	1	0	0	1	1	0	0	1	1	0	0	1	1	0	0	1	1	0	0	1	1	0	0	1	1	0	0	1	1
		0	1	0	1	0	1	0	1	0	1	0	1	0	1	0	1	0	1	0	1	0	1	0	1	0	1	0	1	0	1	0	1
291 — 313										*																							
269 — 290											*																						
248 — 268												*																					
229 — 247													*																				
212 — 228														*																			
196 — 211															*																		
181 — 195																*																	
168 — 180																	*																
155 — 167																		*															
143 — 154																			*														
132 — 142																				*													
122 — 131																					*												
113 — 121																						*											
105 — 112																							*										
100 — 104																								*									

Note: The luminous intensity ranking is determined by the first, second and third digits from the right in the LED print head (i.e. in ---XX122, 122 is the luminous intensity ranking.)

5.2.1 Confirmation Items

The clock frequency and power voltage of the machine are not possible to adjust in the field. However, their measurement procedures are described here for confirmation of clock frequency and each voltage.

1) Clock Frequency

- Measurement point: M60 board; LC1-3 pin and ground terminal
- Specification: 20.000 MHz ± 50 PPM

Note: If the counter does not read with 20.000 MHz, replace with a new crystal oscillator (X1).

2) +5V DC Voltage (SUB)

- Measurement point: M60 board; CN1-12 pin and ground terminal
- Specification: +5V ± 4% (+4.5V to 5.2V)

3) +5V DC Voltage

- Measurement point: M60 board; CN1-7/8 pin and ground terminal
- Specification: +5V ± 4% (+4.5V to 5.2V)

4) +8V DC Voltage

- Measurement point: M60 board; CN1-10 pin and ground terminal
- Specification: +8V± 4% (+7.68V to 8.32V)

5) –8V DC Voltage

- Measurement point: M60 board; CN1-11 pin and ground terminal
- Specification: –8V± 4% (+7.68V to 8.32V)

6) +24V DC Voltage

- Measurement point: M60 board; CN1-15 pin and ground terminal
- Specification: +22V to 27V

7) +30V DC Voltage

- Measurement point: M60 board; CN1-1/2 pin and ground terminal
- Specification: +26V to +45V

8) Contact Image Sensor Output (SIG signal)

- Measurement point: M60 board; CN10-1 pin and ground terminal
- Specification: A waveform sample is shown below.
- Test chart: White sheet (A4 size)

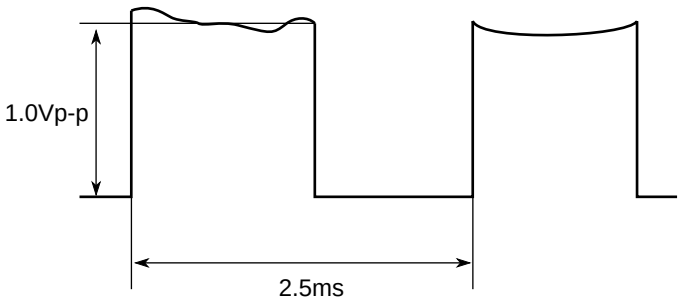

5.2.2 Measurement

1) Turn AC power OFF.

2) Carry out the disassembly procedure up to Main Cover and Scanner Unit removal. (Refer to the Mechanical Disassembly and Reassembly in Chapter 4.2.)

3) Connect extension cables to the M60 board.

4) Connect the frequency counter (for clock frequency), digital voltmeter (for power voltage) and Oscilloscope (for SIG signal). See Figure 5.1.

5) Turn AC power ON.
Main power supply is set to "ON" (PC1 ON) by loading the document on the cover-top. (except +5V SUB)

6) Measurement

7) Turn AC power OFF.

8) Reverse the disassembly procedures.

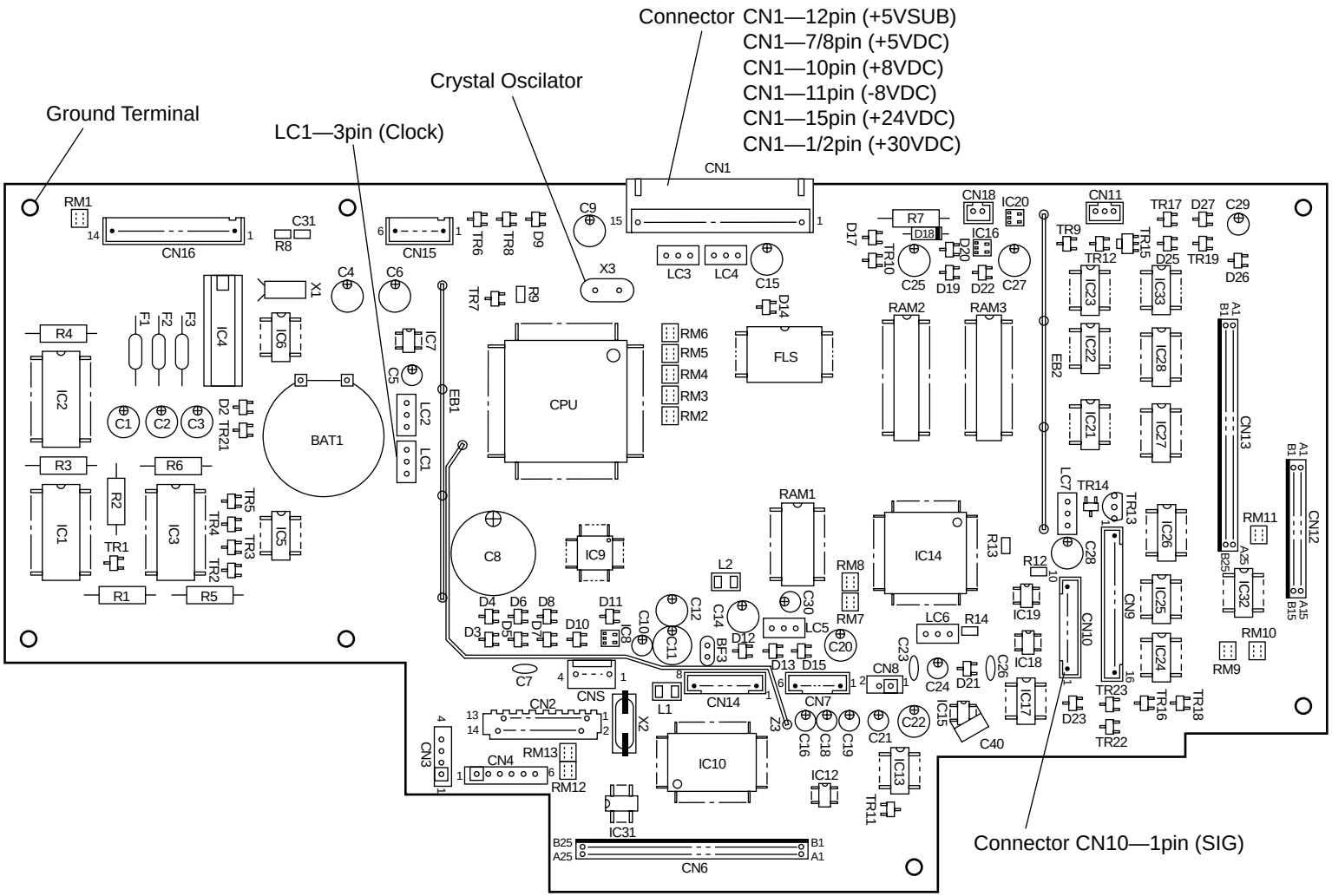

Figure 5.1 Measurement Points on M60 Board

6. CLEANING AND MAINTENANCE

6.1 Replacement of Consumable Parts

The user (or service personnel) is required to replace the following items as consumable parts.

(1) User side

No.	Part name	Expected Use Before Replacement	Reference Item No. in Figure 6.1
1	Toner Cartrige	2500 sheets/cartrige (at 4% duty) (ITU-T document sample No.1) (For the second or later cartridge to a new I/D Unit) * The first toner cartridge installed in a new I/D unit will have a decreased yield.	(1)
2	I/D Unit (Image drum unit)	11,000 sheets/unit	(2)

(2) Service personnel side

No.	Part name	Expected Use Before Replacement	Reference Item No. in Figure 6.1
1	Fuser Unit	180,000 sheets	(3)
2	Separation Rubber	The Separation Rubber will not require replacement for at least 30,000 documents fed.	(4)

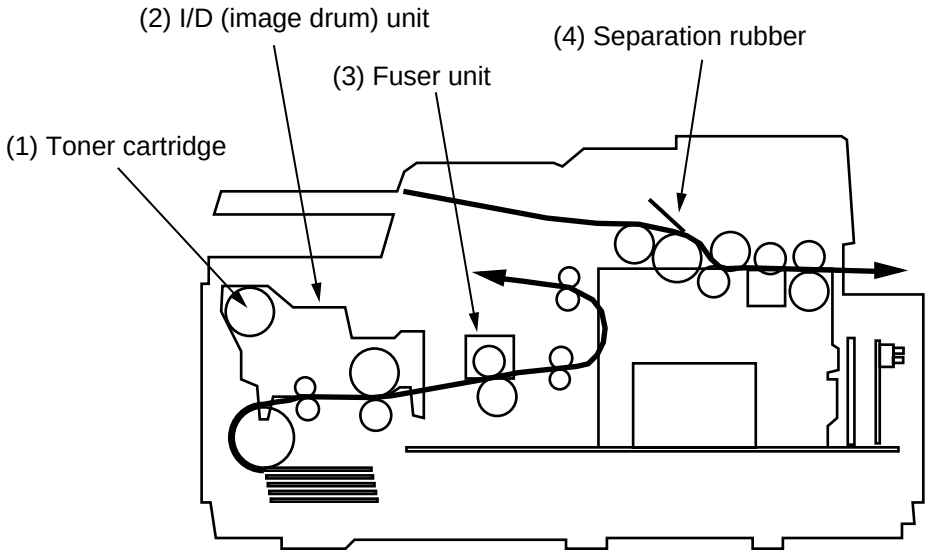

Figure 6.1 Consumable Parts

(3) Others

Table 6.1 Reliability

No.	Item	Specifications
1	Document feeder	Jam occurrence and misfeeds in the automatic document feeder will be less than one in 500 operations for all specified documents.
2	Recording paper feeder	Jam occurrence in the automatic paper feeder will be less than one in 1,500 operations and misfeeds will be less than one in 500 operations for all specified recording paper.
3	Battery • for RTC	The life of the battery is five years. Lithium battery: Not rechargeable.
	• for Memory	300 cycle change/dischange Manganese dioxide lithium battery: chargeable.
4	MTBF	The MTBF for the overall machine will exceed 3,000 hours of actual operation. The MTBF will be measured at a confidence level of 95% under controlled laboratory conditions. The MTBF will be based on 50% transmit and 50% receive activities.

CAUTION

Danger of explosion if battery is incorrectly replaced.

Replace only with the same or equivalent type recommended by the manufacturer.
Dispose of used batteries according to the manufacturer's instructions.

6.2 Routine Inspection

Basically, the routine inspection of following items is performed about half-yearly (or every one year) after the machine is installed. The description of routine inspection is shown in Table 6.2.

Table 6.2 Routine Inspection

No.	Part name	Expected Use Before Replacement	Reference Item No. in Figure 6.2
1	Scan Roller	Clean with wet cloth.	(1)
2	Feed Rollers No. 1 and No. 2	Clean with wet cloth. If the surface of these rollers becomes dirty and the dirt causes the transmitted image or the local copied image to expand vertically, perform this cleaning.	(2)
3	Sub Roller	Clean with wet cloth.	(3)
4	Pinch Rollers	Clean with ethyl alcohol.	(4)
5	ADF Roller	Clean with wet cloth. If the surface of this roller becomes dirty and the dirt causes misfeeding of documents, perform this cleaning.	(5)
6	Contact Image Sensor	Check for accumulation of paper dust, etc. Clean with ethyl alcohol if necessary.	(6)
7	Separation Rubber	Clean with wet cloth. If this rubber is worn out, replace this rubber. (every one year)	(7)
8	LED print head	Clean the surface of the head by moving the tissue paper back and forth several times.	(8)
9	Printer unit	Clean the inside of the printer unit by using wet cloth.	
10	Lubrication	Apply MOLYKOTE EM-30L Greese (Made by Dow corning co., ltd.) to the following parts: a. Gears (every one year)	
11	Cleaning	Remove materials that have fallen from outside, if any.	

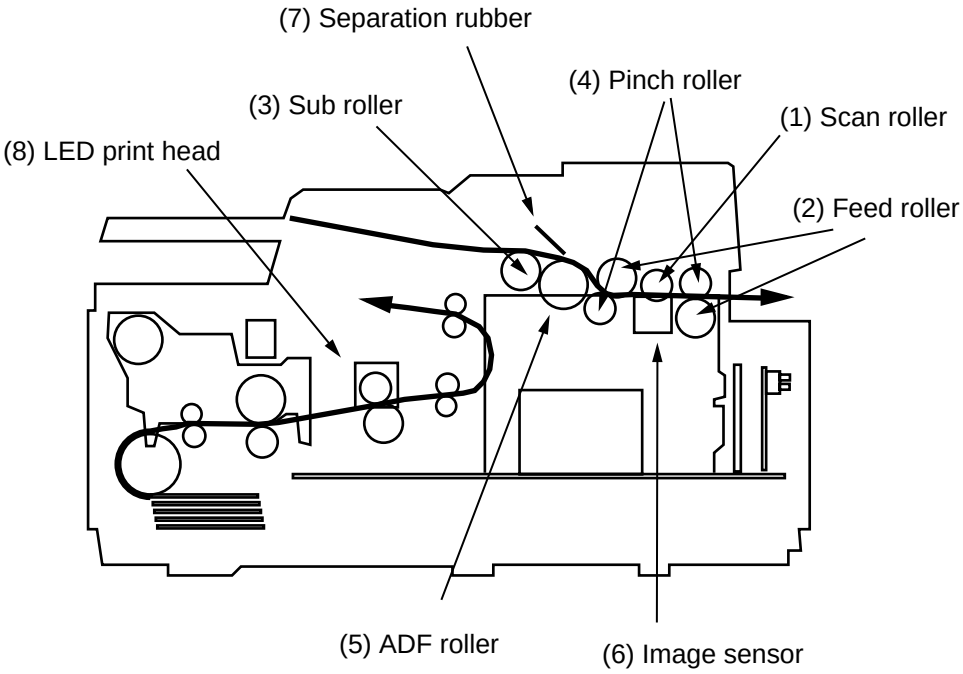

Figure 6.2 Parts of Routine Inspection

6.3 Printer Counter Display/Clear

Note: The fonts displayed on the LCD operation panel may differ from the fonts written this manual.

1. Purpose

A user can clear the image drum unit and check some of the counters (such as the print counter, scan counter) by using the ♦ key or ∅ key.

2-1. Procedure

The following shows the case when the service bit has been set OFF & TONER COUNT CLEAR = OFF.

Operations:

- To bring the LCD up to the desired message, press SELECT FUNCTION key once and one-touch key No.7 in the standby mode. (In case of no message in the memory)
- Press [←] key or [→] key.

The display shows:

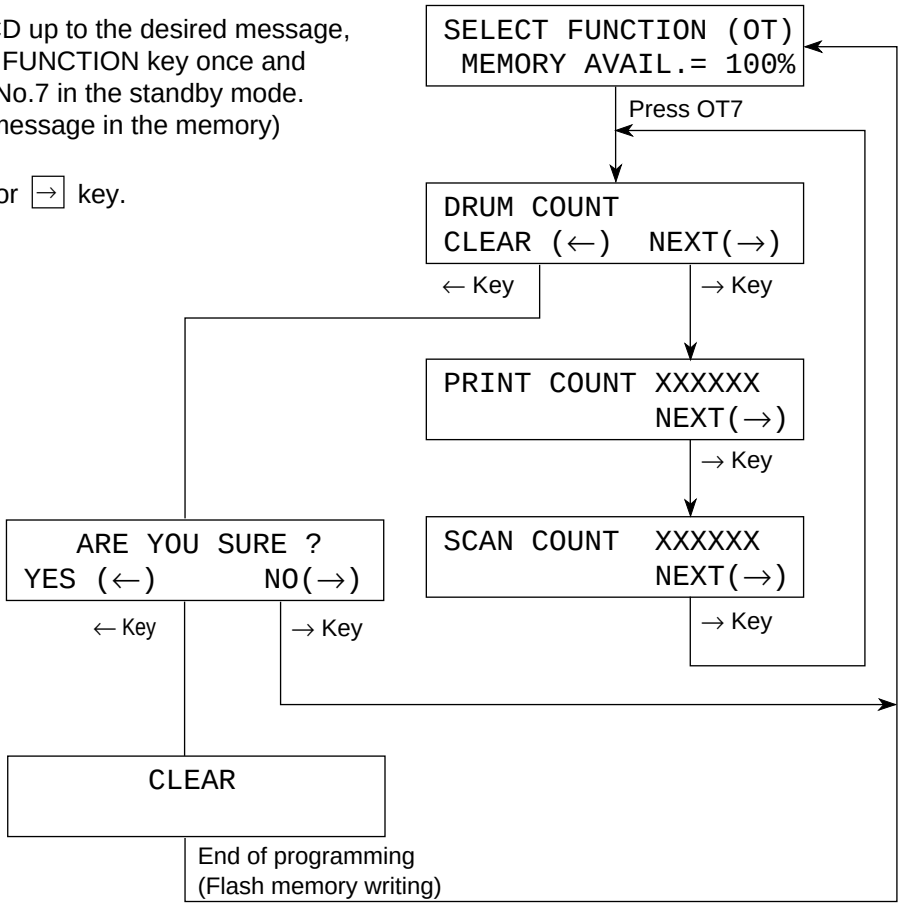

Note : Clear Operation

No. of print counter and scan counter (pages) will appear but cannnot be cleared by user.

User can clear only DRUM counter.

After having cleared the drum counter, warning message will be disappeared.

2-2. Procedure

The following shows the case when the service bit has been set OFF & TONER COUNT CLEAR = ON.

Operations:

- To bring the LCD up to the desired message, press SELECT FUNCTION key once and one-touch key No. 7 in the standby mode. (In case of no message in the memory)
- Press [←] key or [→] key.

The display shows:

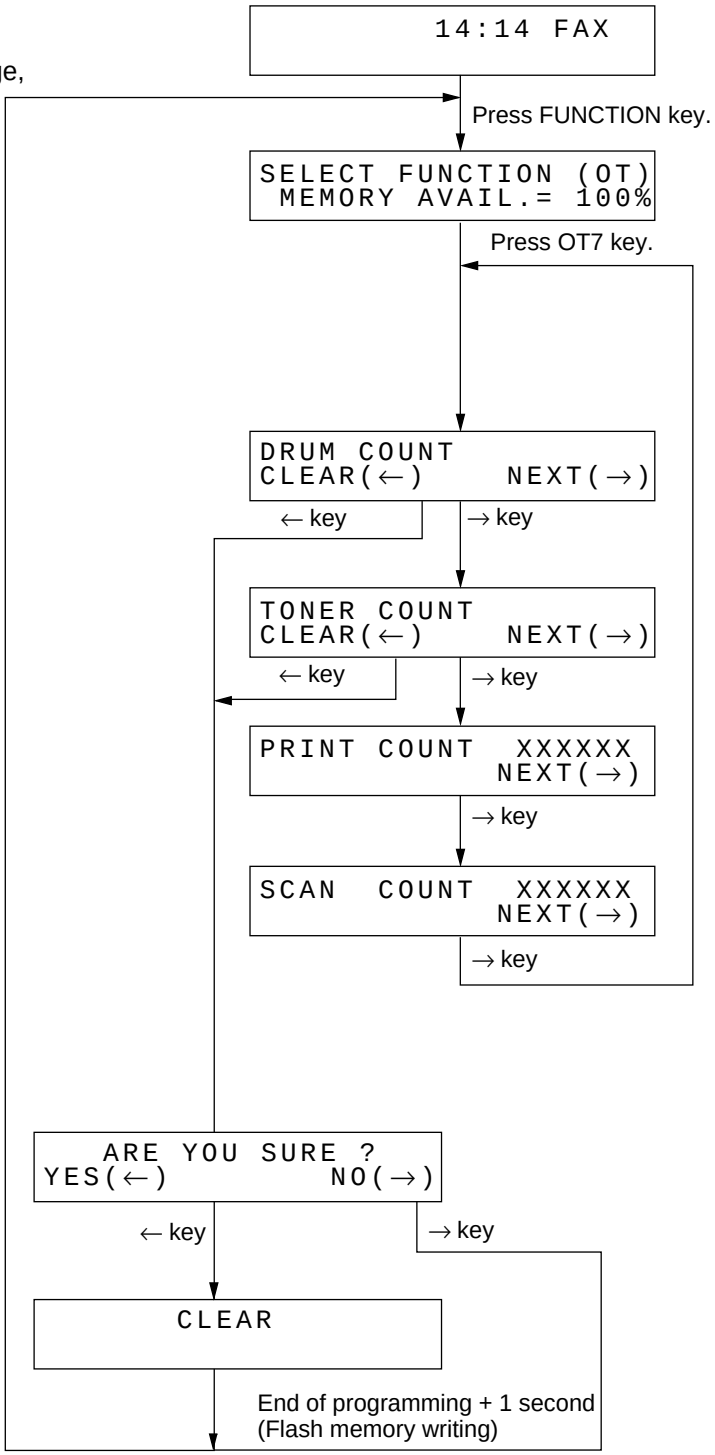

Note : Clear Operation

No. of print counter and scan counter (pages) will appear but cannot be cleared by user.
User can clear DRUM counter and TONER counter.
After having cleared the drum counter, warning message will be disappeared.

6.4 Printer Counter Display/Clear

1. Purpose

The service personnel can clear and check the following data:

- Image Drum
- Toner
- Image Drum (Total)
- Print
- Scan

2. Procedure

The following shows the case when the service bit has been set ON.

Operations:

- To bring the LCD up to the desired message, press SELECT FUNCTION key once and one-touch key No. 7 in the standby mode. (In case of no message in the memory)
- Press [←] key or [→] key.

The display shows:

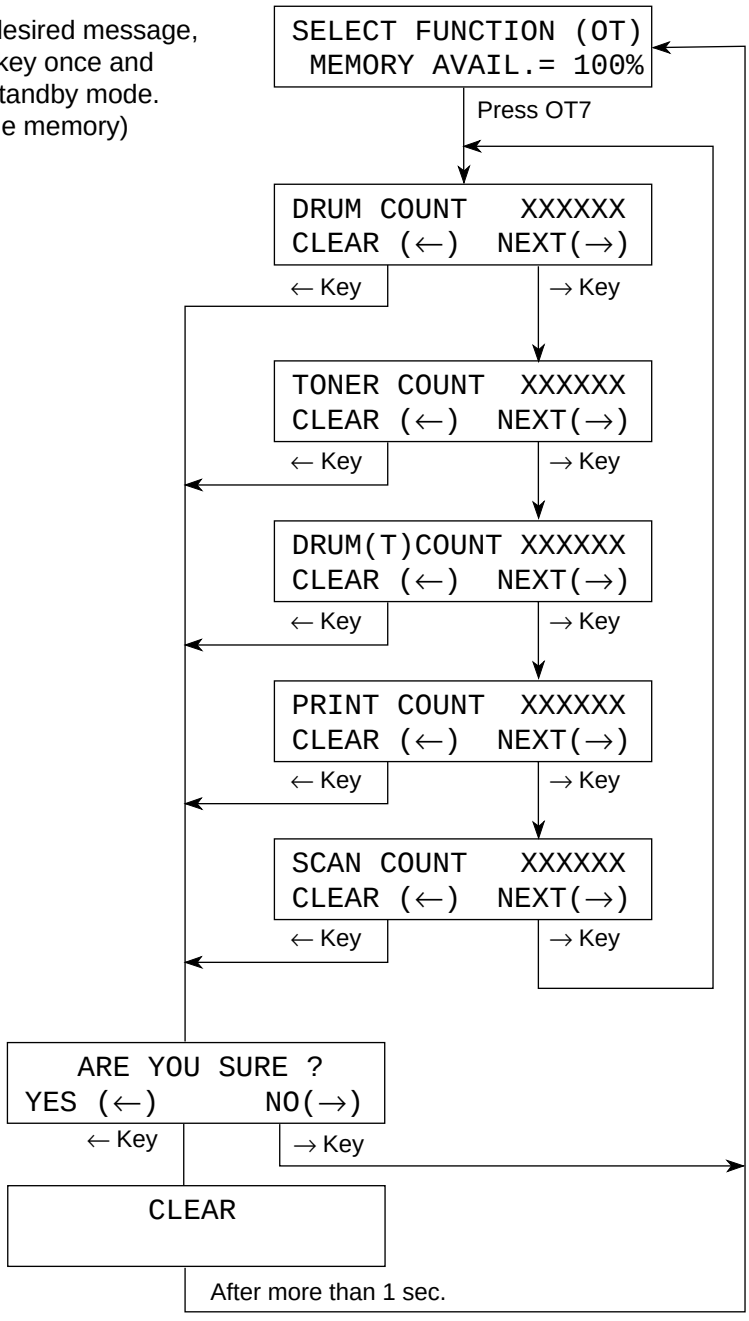

Note: DRUM (T) will be used to know the total in-use life of the machine.

6.5 Local Test

6.5.1 When G4 option board is not installed

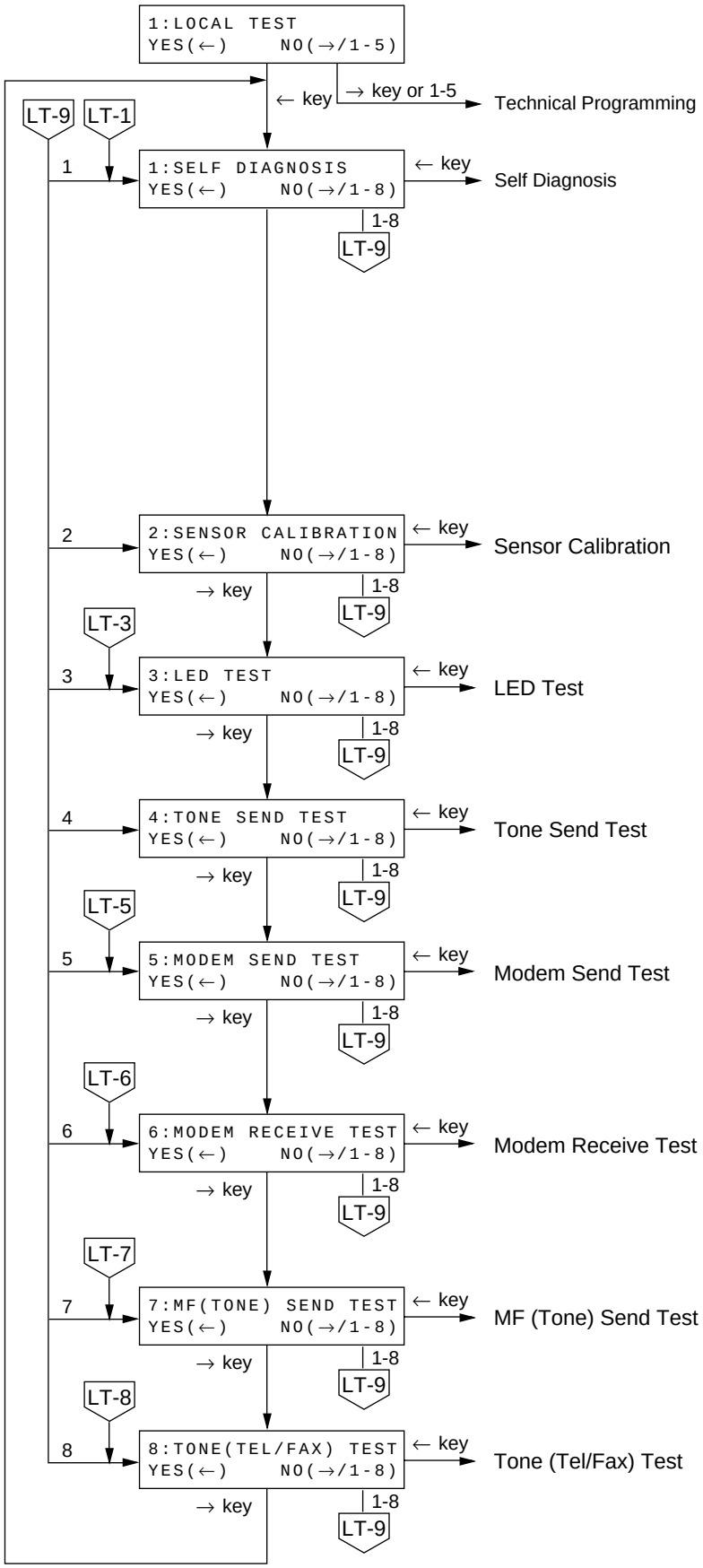

6.5.2 When G4 option baord is installed

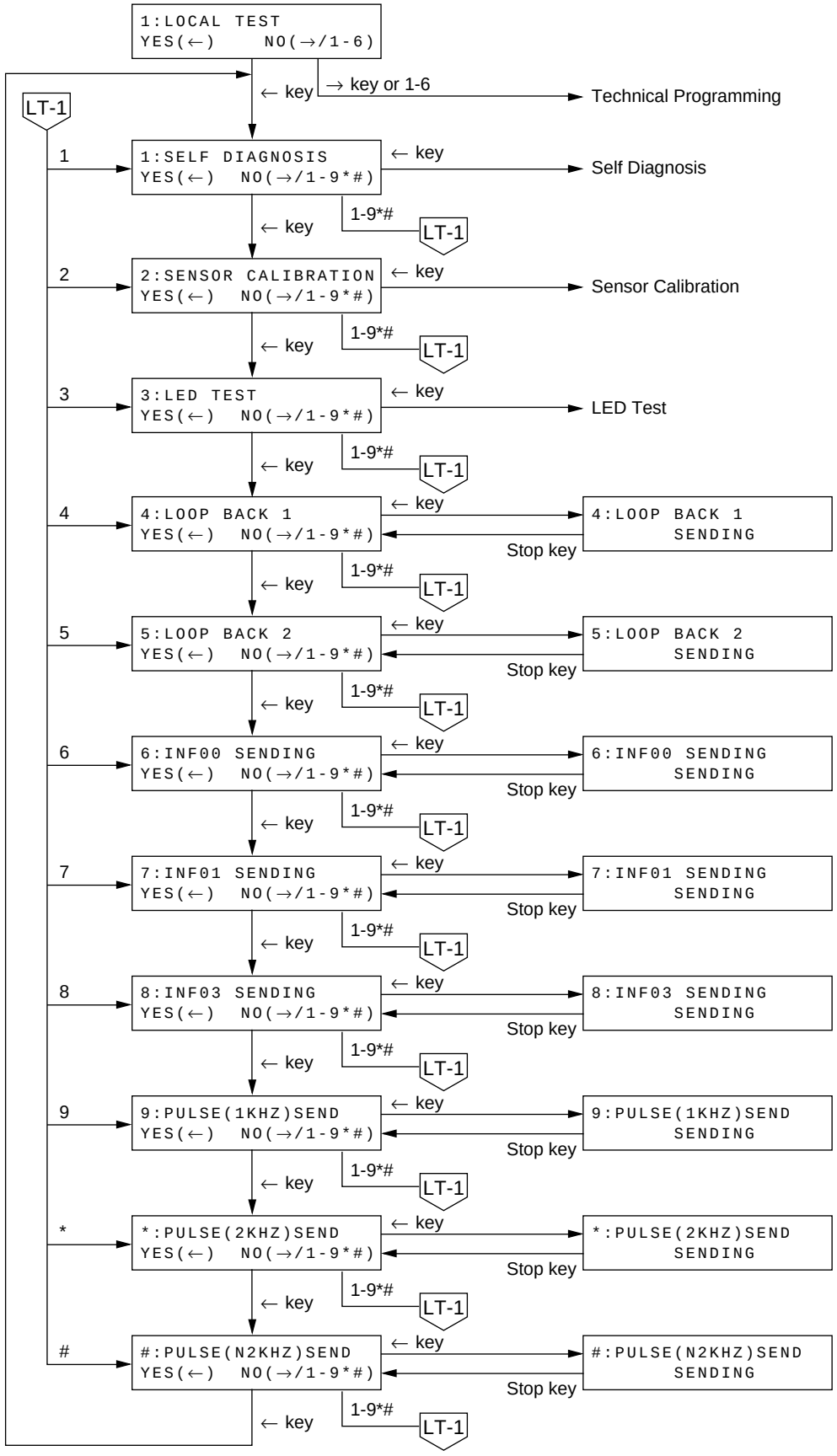

- When G4 option board is installed, the following items can be selected.
  LOOP BACK 1 to PULSE (N2KHZ) send
- These tests are continued till STOP key is pressed.

6.6 Self-diagnosis Test

1. Purpose
To check ROMs, RAMs and printing function.

2. Procedure

(in Case of not G4 Boad)

Operations:

- To bring the LCD up to the desired message, press SELECT FUNCTION key once and COPY key twice in the standby mode. (In case of no message in the memory)
- Press ← key.
- Press ← key.
- Press ← key to activate self-diagnosis.

(Figure 6.3 shows the printed data.)

The display shows:

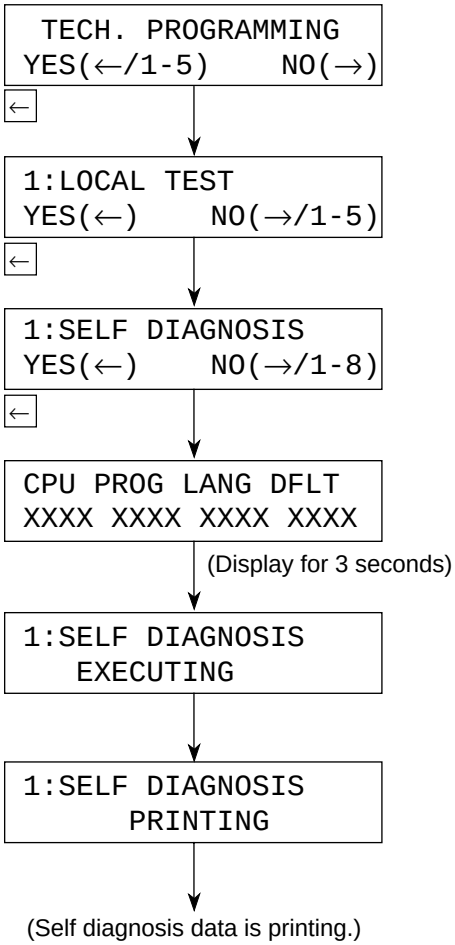

6.6.1 Self Diagnosis Report

6.6.1.1 Print conditions

1) The following self diagnosis results are always printed.
   - CPU - ROM, FLASH - PROGRAM / LANGUAGE / DEFAULT version read and hush check.
   - CPU-RAM, FLASH - RAM read/write check
   - Image processor LSI RAM check
   - Setting DEFAULT TYPE and reading clock at self diagnosis execution.

2) The following printing differs depending on the machine type of OKIFAX 5650 and on the condition of option provided or not.
   *1 "4M" is printed for OKIFAX 5650.
   *2 Printed only when MFP option is provided. "MFG:," "MDL:," and "DES:" information is printed out of ID character strings of PnP device. Small letters can be printed. The maximum number of each of letters and characters shall be 45.
   *3 Printed only when ISDN option is provided.
   When performing self diagnosis, ISDN board test is executed and its result (error information at power on is partially adopted) is printed.
   The print contents at ISDN error are as shown below.

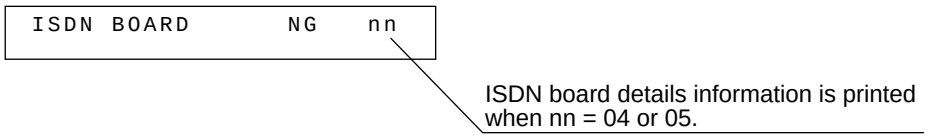

nn=01: Waiting PC loading
When turning on power, BOOT2 signal from HOST side was in PC loading mode.

nn=02: Board faulty
When turning on power, PROGRAM HUSH of ISDN board was no good.

nn=03: Board faulty
Initial sequence between boards was not executed in spite of elapse of 10 seconds after turning on power. (Status window did not obtain normal value.)

nn=04: Board faulty
Initial sequence of ISDN LSI was not executed when turning on power. (No response to command, Response no good)

nn=05: ISDN LSI faulty
ISDN LSI test function (ROM/RAM test, loop test) resulted no good.

* Figure 6.3 shows a printed sample.

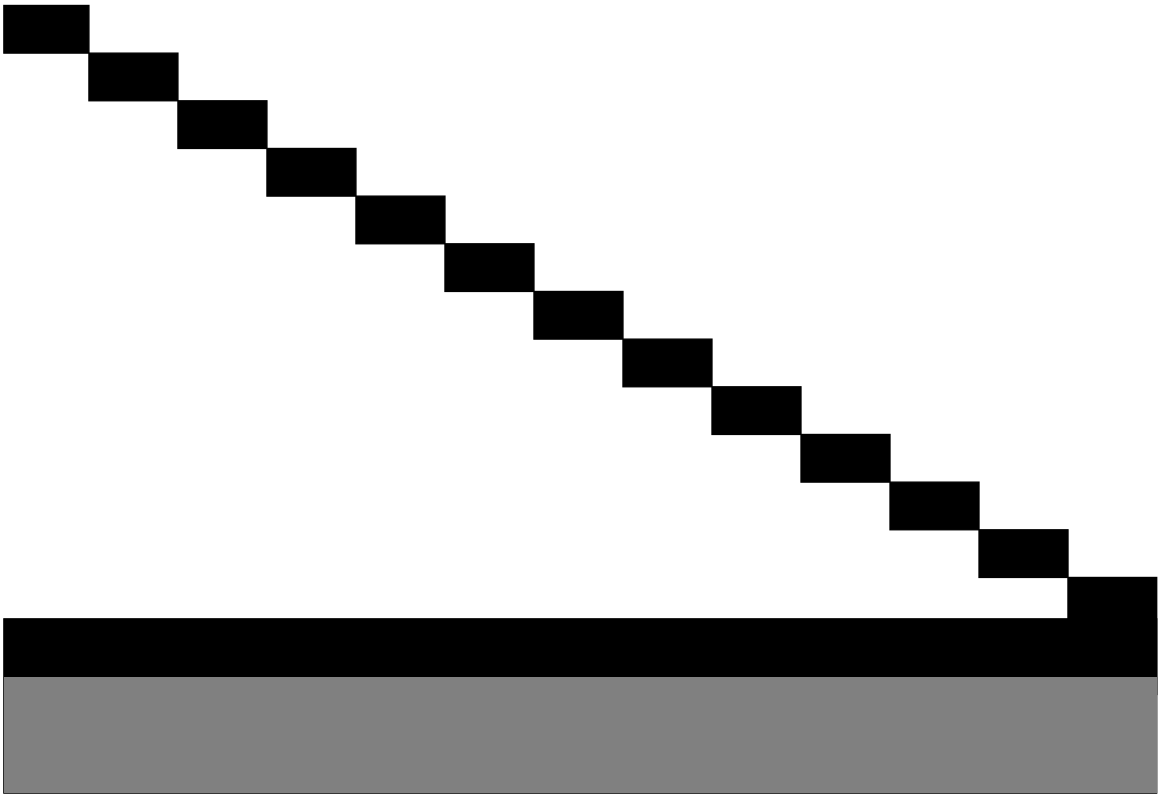

```
CPU-ROM   VERSION  aaaa
          HASH     OK   hhhh
CPU-RAM            OK
PROGRAM   VERSION  aaaa
          HASH     OK   hhhh
LANGUAGE  VERSION  aaaa
          HASH     OK   hhhh
DEFAULT   VERSION  aaaa
          HASH     OK   hhhh
RAM1      4M       OK                          *1
RAM2               OK
DEFAULT TYPE       01   03/03/2000  12:00
DEVICE ID          MFG:OKI DATA CORP;          *2
                   MDL:FX-046FAX;              *2
                   DES:OKI FX-046FAX;          *2
OPT-RAM   4M       OK                          *3
ISDN BOARD         OK
CPU-ROM   VERSION  aaaa
          HASH     OK   hhhh
CPU-RAM            OK
PROGRAM   VERSION  aaaa
          HASH     OK   hhhh
RAM       2M       OK
DPRAM     2K       OK
```

a: Alphabet and digit
h: Hexadecimal numeral
n: Digit

Figure 6.3 Self-diagnosis Data

6.7 Sensor Calibration Test

1. Purpose

To adjust the linearity of output levels of contact image sensor.

Operations:

- To bring the LCD up to the desired message, press SELECT FUNCTION key once and COPY key twice in the standby mode. (In case of no message in the memory)
- Press [←] key.
- Press [←] key.

The display shows:

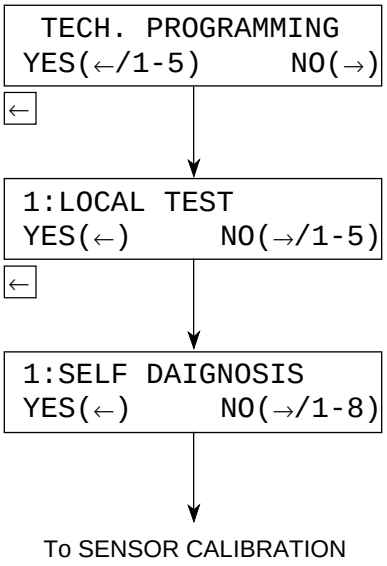

Operations: **The display shows:**

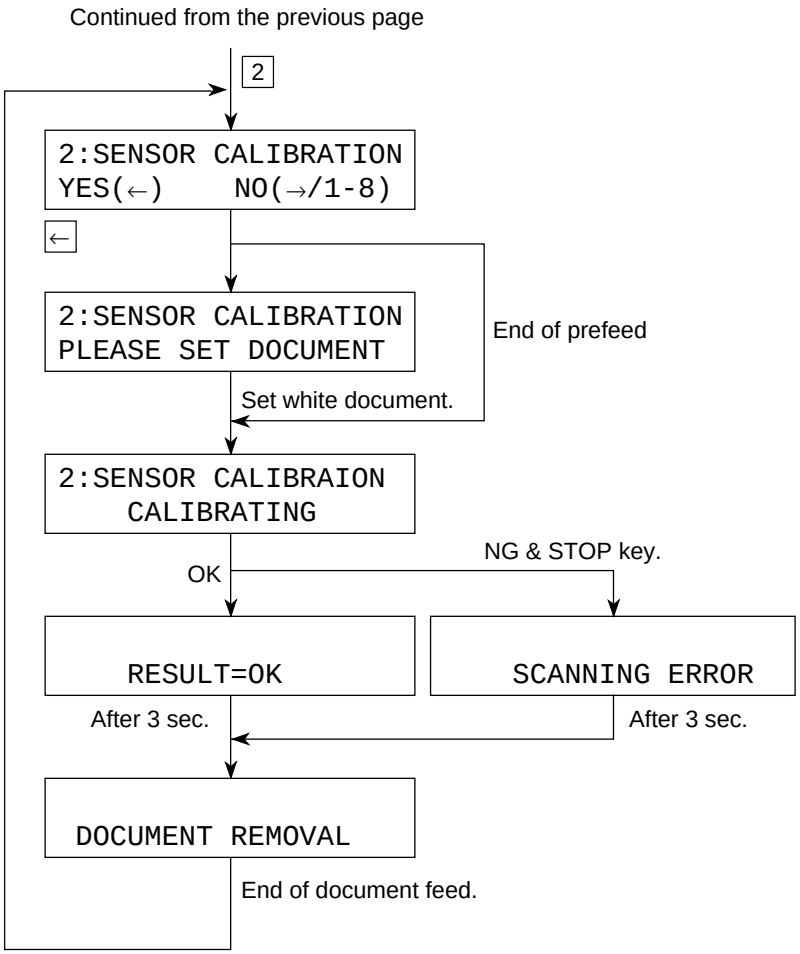

- Enter "2".
- Press ← key.
- Load document(s).
  For adjustment of levels, use white plain bond paper(s) of NA Letter or A4 size.
- Observe and check the document feed operation.
  Check that the followings do not occur:
  - Document skew.
  - Multiple document feeding.
  - No feeding.

Note: After adjustment of levels, check the copy quality by copying test charts or documents.

6.8 LEDs Test

1. Purpose

To check all LEDs on operation panel by lighting.

2. Procedure

Operations: **The display shows:**

- To bring the LCD up to the desired message, press SELECT FUNCTION key once and COPY key twice in the standby mode. (In case of no message in memory)

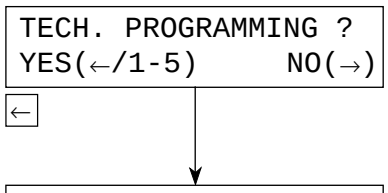

- Press ← key.

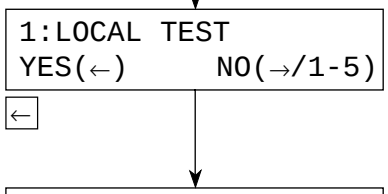

- Press ← key.

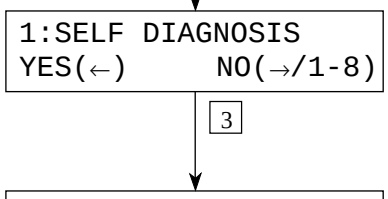

- Enter "3".

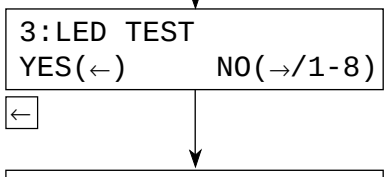

- Press ← key.

- Observe and check that LEDs are blinking.
  - All LEDs will be sequentially turned on for one second in the following order.

(Start)

→ ALARM → DARK → NORMAL → LIGHT → STD → FINE

all LED off ← all LED on ← PHOTO ← EX.FINE ←

1 second interval.

- After the checking, press STOP key.

6.9 Tone Send Test

1. Purpose

To send the G3 tonal frequencies to the line.

2. Procedure

Operations:

- To bring the LCD up to the desired message, press SELECT FUNCTION key once, COPY key twice and ← key twice. (In case of no message in memory)
- Enter "4".
- Press ← key.
- After the checking, press STOP key or end of the transmission.

The display shows:

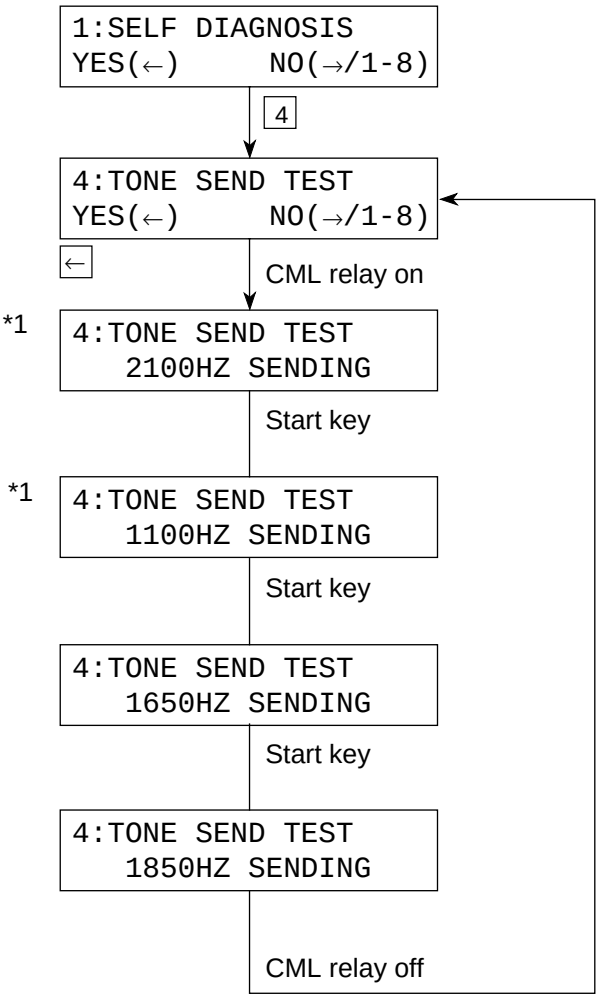

*1: When indicating "2100Hz, 1100Hz, 1650Hz or 1850Hz SENDING", these tests are continued till START key or STOP key is pressed.

6.10 High-speed Modem Send Test

1. Purpose

To check the telephone line quality in combination with a remote station programmed to the high-speed modem receive test mode.

2. Procedure

Operations:

- To bring the LCD up to the desired message, press SELECT FUNCTION key once, COPY key twice and [←] key twice. (In case of no message in memory)
- Enter "5".
- Press [←] key.
- Set MODEM rate by [→] key.
- Press [←] key.
  All zero data will be continuously sent.
- After the test, press STOP key.

The display shows:

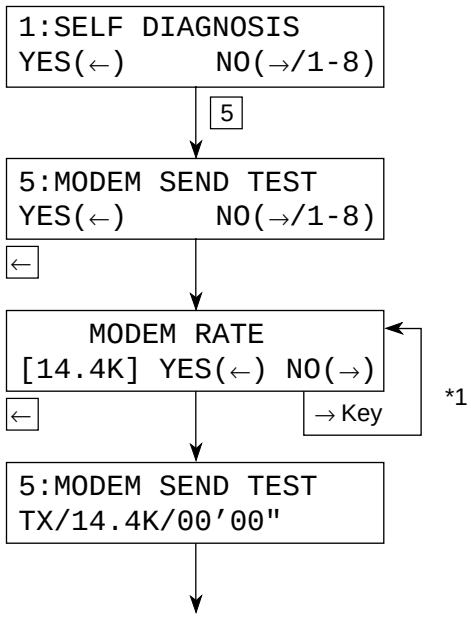

(For detail, see Figure 6.4)

*1: → 33.6K → 28.8K → 14.4K → 12.0K → 9.6KT (V.17) → 7.2KT (V.17) →
← 0.3K ← 2.4K ← 4.8K7.2K (V.29) ← 9.6K (V.29)

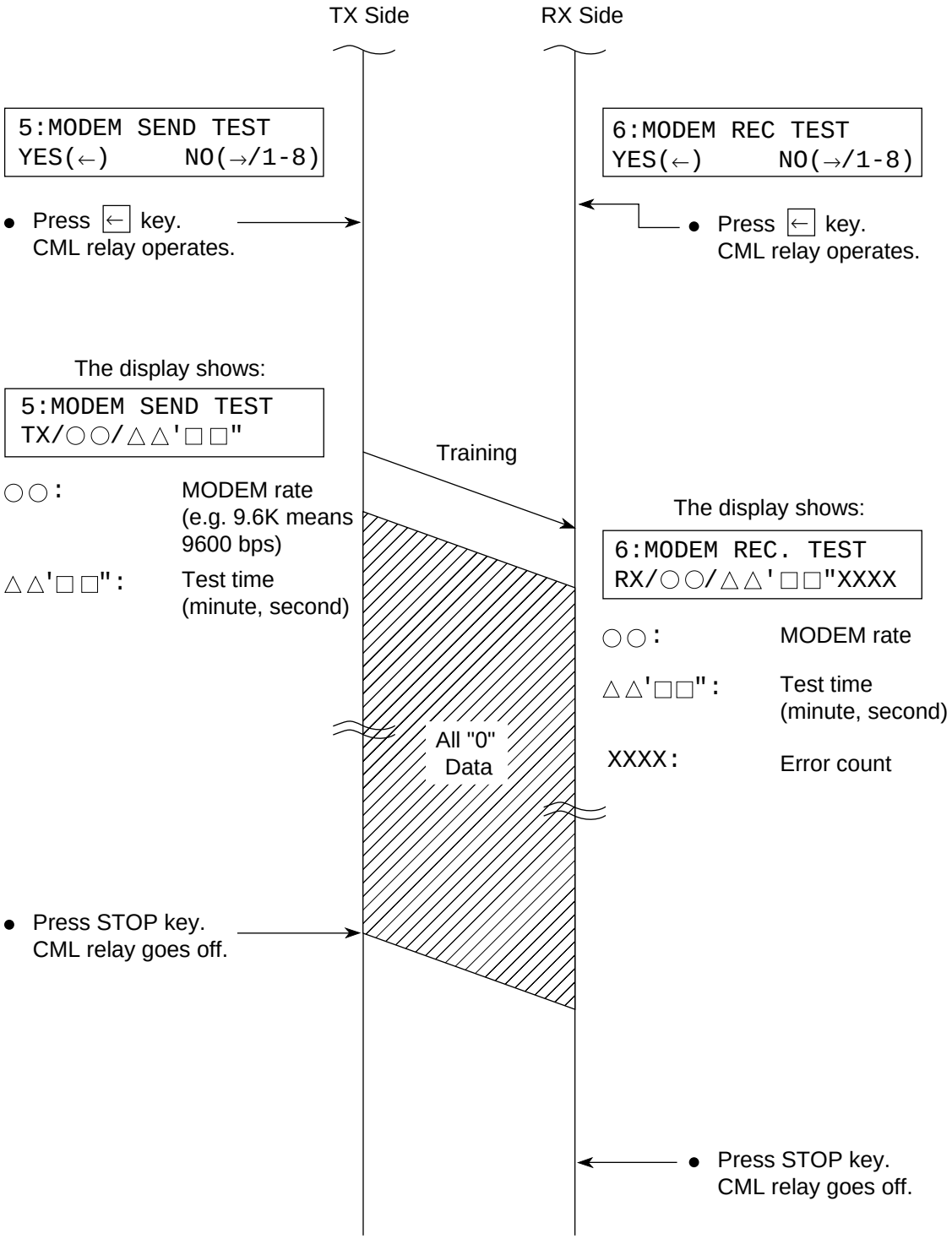

Figure 6.4 High-speed Modem Send and Receive Test

6.11 High-speed Modem Receive Test

1. Purpose

To check the telephone line quality in combination with a remote station programmed to the high-speed modem send test mode.

2. Procedure

Operations:

- To bring the LCD up to the desired message, press SELECT FUNCTION key once, COPY key twice and [←] key twice. (In case of no message in memory)
- Enter 6.
- Press [←] key.
- Set MODEM rate by [→] key.
- Press [←] key.
- After the test, press STOP key.

The display shows:

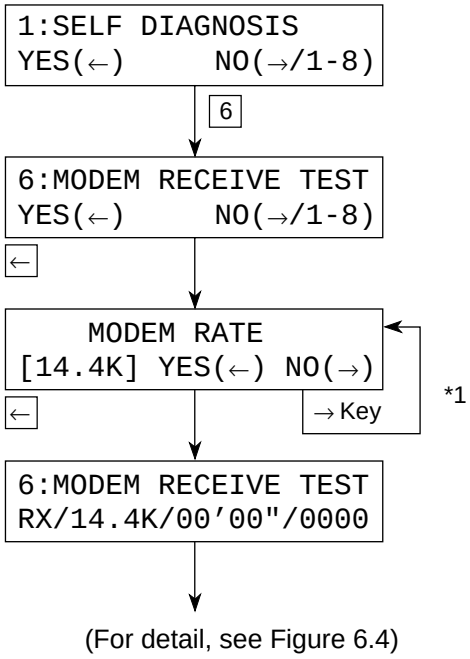

(For detail, see Figure 6.4)

*1: → 14.4K → 12.0K → 9.6KT (V.17) → 7.2KT (V.17) → 9.6K (V.29) → 7.2K (V.29) → 4.8K → 2.4K →

6.12 MF Send Test

1. Purpose

To send the multi-frequencies of tone dialling to the line.

2. Procedure

Operations:

- To bring the LCD up to the desired message, press SELECT FUNCTION key once, COPY key twice and [←] key twice. (In case of no message in memory)
- Enter 7.
- Press [←] key.
- Press 1, 2, 3, 4, 5, 6, 7, 8, 9, 0, * or # key. MF tone corresponding to the key pressed will be sent until the next key is pressed.
- After the test, press STOP key.
  Frequencies of MF tones are as follows:

1	697 Hz/1209 Hz
2	697 Hz/1366 Hz
3	697 Hz/1477 Hz
4	770 Hz/1209 Hz
5	770 Hz/1366 Hz
6	770 Hz/1477 Hz
7	852 Hz/1209 Hz
8	852 Hz/1366 Hz
9	852 Hz/1477 Hz
0	941 Hz/1366 Hz
*	941 Hz/1209 Hz
#	941 Hz/1477 Hz

The display shows:

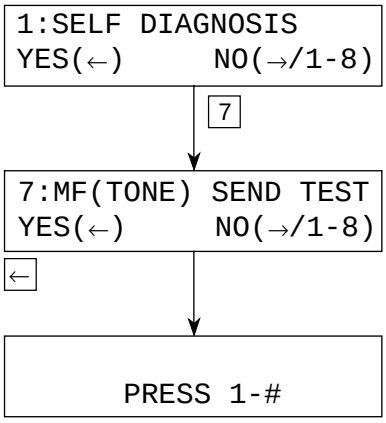

6.13 Tone (TEL/FAX)

1. Purpose

To check the pseudo-ring back tone of TEL/FAX automatic switching.

2. Procedure

Operations:	The display shows:
• To bring the LCD up to the desired message, press SELECT FUNCTION key once, COPY key twice and [←] key twice. (In case of no message in memory)	1:SELF DIAGNOSIS YES(←) NO(→/1-8)
• Enter 8.	[8] 8:TONE(TEL/FAX) TEST YES(←) NO(→/1-8)
• Press [←] key.	[←] 8:TONE(TEL/FAX) TEST TONE SENDING
• After the test, press STOP key.	

6.14 Protocol Dump Data Printing

1. Purpose

To analyze the transmitted/received G3 protocol signals.

2. Procedure

- Manual print-out of the last communication.

(a) Manual print-out

Operations:

- Press SELECT FUNCTION key, provided that the service bit is ON.
- Press one-touch key No.6
- Enter 6.
- Press ← key.

The display shows:

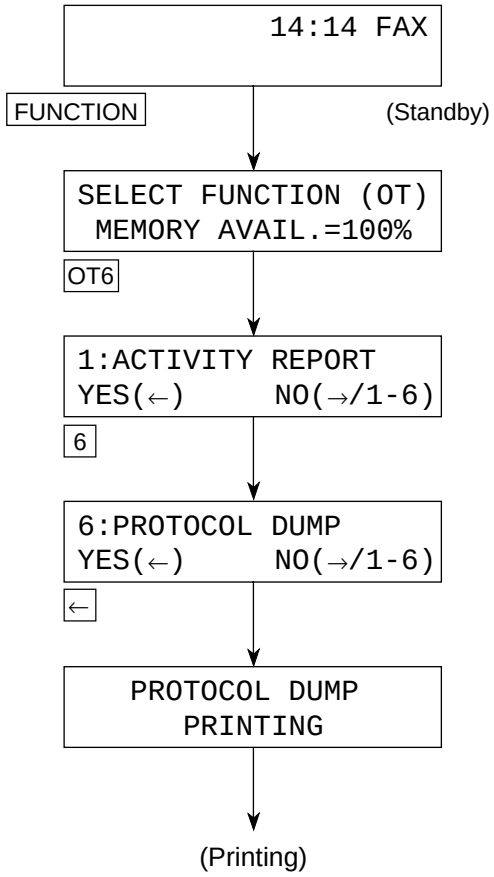

6.14.1 G3 Protocol Dump

Purpose:

To allow the serviceman to obtain a list of protocol signals transferred between the transmitter and receiver.

Print conditions:

- Modem trace information for each TX/RX is printed. (Informeation for RX is added on 2nd page.)
- Modem result code is printed.
- JM information is moved in the arrangement of CM information.
- "00" is printed always since the received SID on the 2nd page is invalid.

Method:

The report will be manually printed out for maintenance purpose. If the previous communication is G3, G3 communication protocol dump is printed out. If it is G4, the G4 communication protocol dump is printed.

1. Title of the report
2. Date and time when the report was printed
3. Sender ID
4. Date of communication
5. Time of communication
6. One message transmission/reception time
7. Identification of remote station
   • CSI and/or telephone number
8. Mode of transmission/reception according to ITU-T designation
9. Total number of pages in communicaiton
10. Identification of the result of the communication
11. Service code
12. TX: DIS/DTC/DCS/NSF/NSS/NSC
13. Transmitted telephone number
14. Transmitted SEP/SUB
15. Transmitted SID
16. Common information of ITU-T V.34 TX/RX
17. Modem trace
18. RX: DIS/DTC/DCS/NSF/NSS/NSC (page 2)
19. Received telephone number
20. Received SEP/SUB (page 2)
21. Received SID (page 2)
22. Common information of ITU-T V.34 TX/RX (page 2)
23. Modem trace (page 2)

PROTOCOL DUMP P1

12/24/1998 19:00
ID=OKI TAKASAKI

DATE	TIME	S,R-TIME	DISTANT STATION ID	MODE	PAGES	RESULT
12/24	18:56	00'33"	12345678901234567890123 4	TX	002	OK 0000

	FCF				
TX		NSS	PPS_MPS	PPS_EOP	DCN
RX	NSF DIS	CFR	MCF	MCF	
TX					
RX					
TX					
RX					
TX					
RX					

TRANSMITTED FRAME

DIS
00 00 00 00 00 00 00 00 00 00 00 00 00 00 00 00 00 00 00 00
DTC
00 00 00 00 00 00 00 00 00 00 00 00 00 00 00 00 00 00 00 00
DIS
00 00 00 00 00 00 00 00 00 00 00 00 00 00 00 00 00 00 00 00
NSF
00 00 00 00 00 00 00 00 00 00 00 00 00 00 00 00 00 00 00 00 00 00 00 00 00 00 00 00 00 00 00 00
00 00 00 00 00 00 00 00 00 00 00 00 00 00 00 00 00 00 00 00 00 00 00 00 00 00 00 00 00 00 00 00
00 00 00 00 00 00 00 00 00 00 00 00 00 00 00 00 00 00 00 00 00 00 00 00 00 00 00 00 00 00 00 00
00 00 00 00
NSS
FF C8 C4 00 00 84 80 30 40 E4 10 40 B8 39 20 0C 0C 0C 0C 30 82 4A AA 82 42 92 12 CA 04 92 D2 F2
80 40 80 10 00 00 00 00 00 00 00 00 00 00 00 00 00 00 00 00 00 00 00 00 00 00 00 00 00 00 00 00
00 00 00 00 00 00 00 00 00 00 00 00 00 00 00 00 00 00 00 00 00 00 00 00 00 00 00 00 00 00 00 00
00 00 00 00
NSC
00 00 00 00 00 00 00 00 00 00 00 00 00 00 00 00 00 00 00 00 00 00 00 00 00 00 00 00 00 00 00 00 00 00
00 00 00 00 00 00 00 00 00 00 00 00 00 00 00 00 00 00 00 00 00 00 00 00 00 00 00 00 00 00 00 00 00 00
00 00 00 00 00 00 00 00 00 00 00 00 00 00 00 00 00 00 00 00 00 00 00 00 00 00 00 00 00 00 00 00 00 00
00 00 00 00
CSI/CIG/TSI
00 00 00 00 00 00 00 00 00 00 00 00 00 00 00 00 00 00 00 00
SEP/SUB
00 00 00 00 00 00 00 00 00 00 00 00 00 00 00 00 00 00 00 00
SID
00 00 00 00 00 00 00 00 00 00 00 00 00 00 00 00 00 00 00 00
V34
CM JM
00 00 00 00 00 00 00 00

SYMBOL RATE(SPS) =
DATA SIGNALLING RATE(BPS) =
RESULT 00

MODEM TRACE
00 00 00 00 00 00 00 00 00 00 00 00 00 00 00 00 00 00 00 00 00 00 00 00 00 00 00 00 00 00 00 00
00 00 00 00 00 00 00 00 00 00 00 00 00 00 00 00 00 00 00 00 00 00 00 00 00 00 00 00 00 00 00 00
00 00 00 00 00 00 00 00 00 00 00 00 00 00 00 00 00 00 00 00 00 00 00 00 00 00 00 00 00 00 00 00

Figure 6.5 (1/2) Protocol Dump Report (G3)

PROTOCOL DUMP P2

12/24/1998 19:00
ID=OKI TAKASAKI

```
RECEIVED FRAME

DIS
FF C8 01 00 73 17 22 00 00 00 00 00 00 00 00 00 00 00 00 00
DTC
00 00 00 00 00 00 00 00 00 00 00 00 00 00 00 00 00 00 00 00
DCS
00 00 00 00 00 00 00 00 00 00 00 00 00 00 00 00 00 00 00 00
NSF
FF C0 04 00 00 84 80 08 40 F4 10 40 F9 7D 20 0C 0C 0C 0C 90 F2 52 72 F2 12 04 92 D2 F2 80 F0 80
40 80 50 00 00 00 00 00 00 00 00 00 00 00 00 00 00 00 00 00 00 00 00 00 00 00 00 00 00 00 00
00 00 00 00 00 00 00 00 00 00 00 00 00 00 00 00 00 00 00 00 00 00 00 00 00 00 00 00 00 00 00
00 00 00 00
NSS
00 00 00 00 00 00 00 00 00 00 00 00 00 00 00 00 00 00 00 00 00 00 00 00 00 00 00 00 00 00 00
00 00 00 00 00 00 00 00 00 00 00 00 00 00 00 00 00 00 00 00 00 00 00 00 00 00 00 00 00 00 00
00 00 00 00 00 00 00 00 00 00 00 00 00 00 00 00 00 00 00 00 00 00 00 00 00 00 00 00 00 00 00
00 00 00 00
NSC
00 00 00 00 00 00 00 00 00 00 00 00 00 00 00 00 00 00 00 00 00 00 00 00 00 00 00 00 00 00 00 00
00 00 00 00 00 00 00 00 00 00 00 00 00 00 00 00 00 00 00 00 00 00 00 00 00 00 00 00 00 00 00 00
00 00 00 00 00 00 00 00 00 00 00 00 00 00 00 00 00 00 00 00 00 00 00 00 00 00 00 00 00 00 00 00
00 00 00 00
CSI/CIG/TSI
00 00 00 00 00 00 00 00 00 00 00 00 00 00 00 00 00 00 00 00
SEP/SUB
00 00 00 00 00 00 00 00 00 00 00 00 00 00 00 00 00 00 00 00
SID
00 00 00 00 00 00 00 00 00 00 00 00 00 00 00 00 00 00 00 00
V34
CM              JM
00 00 00 00     00 00 00 00

MODEM TRACE
00 00 00 00 00 00 00 00 00 00 00 00 00 00 00 00 00 00 00 00 00 00 00 00 00 00 00 00 00 00 00 00
00 00 00 00 00 00 00 00 00 00 00 00 00 00 00 00 00 00 00 00 00 00 00 00 00 00 00 00 00 00 00 00
00 00 00 00 00 00 00 00 00 00 00 00 00 00 00 00 00 00 00 00 00 00 00 00 00 00 00 00 00 00 00 00
```

Figure 6.5 (2/2) Protocol Dump Report (G3)

6.14.2 Analysis from the data

The printed out data permits to analyze G3 facsimile communication protocol signals between two facsimile machines. Figure 6.5 (2/2) shows the result of an analysis on the printed data referring to Figure 6.5 (1/2) (Protocol dump data).

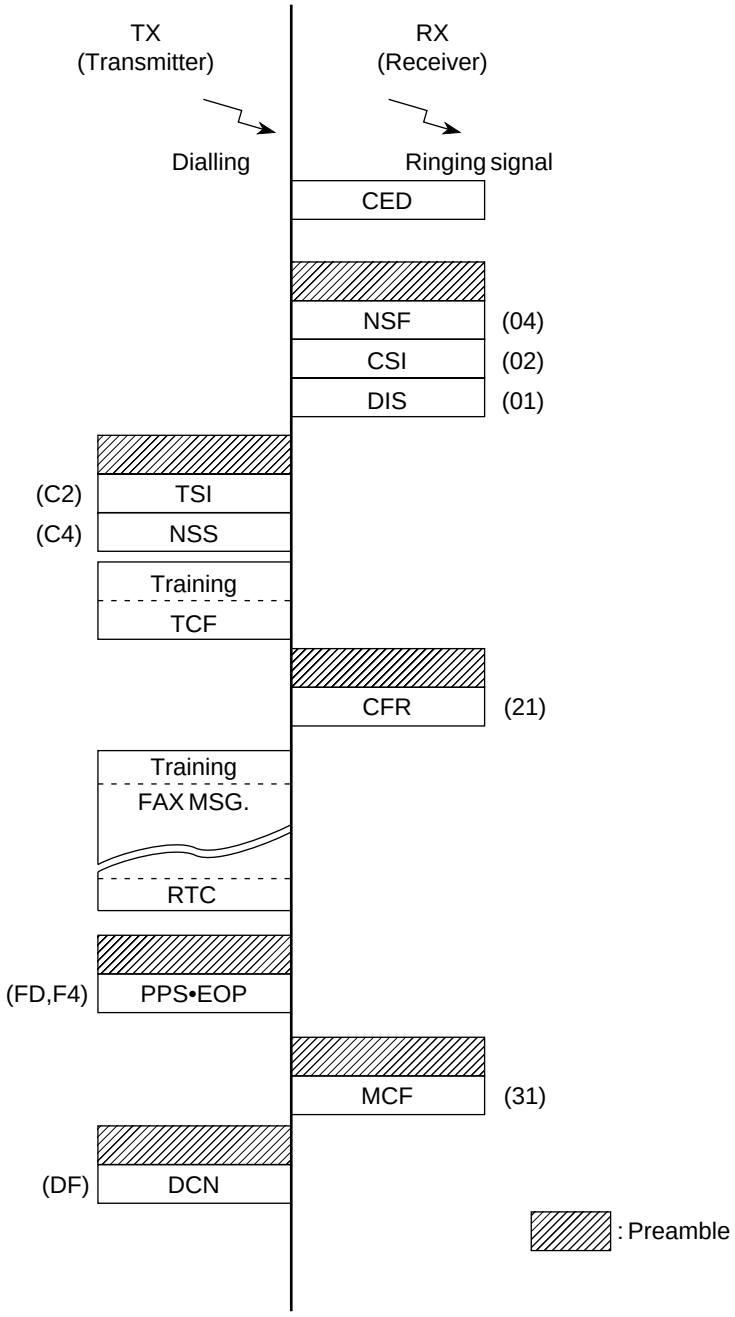

Figure 6.6 Result of Analysis (Example)

6.14.3 FCF (Facsimile Control Field) conversion table

Table 6.2 shows all FCF signals which are needed to analyze the printed out protocol dump data.

Some signals have two different hexadecimal codes in accordance with the calling party or called party.

Table 6.2 FCF Signals Conversion Table

Abbreviation	Hex. Codes		Description of function
NSF	04		Non-Standard Facilities
CSI	02		Called Subscriber Identification
DIS	01		Digital Identification Signal
NSC	84		Non-Standard Facilities Command
CIG	82		Calling Subscriber Identification
DTC	81		Digital Transmit Command
NSS	44	C4	Non-Standard Set-Up
TSI	42	C2	Transmitting Subscriber Identification
DCS	41	C1	Digital Command Signal
CFR	21	A1	Confirmation to Receive
MCF	31	B1	Message Confirmation
FTT	22	A2	Failure to Train
MPS	72	F2	Multi-Page Signal
EOM	71	F1	End of Message
EOP	74	F4	End of Procedure
RTP	33	B3	Retrain Positive
RTN	32	B2	Retrain Negative
PIP	35	B5	Procedure Interrupt Positive
PIN	34	B4	Procedure Interrupt Negative
PRI-MPS	7A	FA	Procedure Interrupt-MPS
PRI-EOM	79	F9	Procedure Interrupt-EOM
PRI-EOP	7C	FC	Procedure Interrupt-EOP
DCN	5F	DF	Disconnect
CRP	58	D8	Command Repeat
CTC	48	C8	Continue to Correct
CTR	23	A3	Response to Continue to Correct
EOR	73	F3	End of Retransmission
ERR	38	B8	Response to End of Retransmission
FCD	60		Facsimile Coded Data
PPS	7D	FD	Partial Page Signal
PPR	3D	BD	Partial Page Request
RCP	61		Return to Control for Partial Page
RNR	37	B7	Receiver not Ready
RR	76	F6	Receiver Ready

6.14.4 G4 Protocol Dump

Purpose:

To allow the serviceman to obtain a list of protocol signals transmitter and receiver.

Method:

The report will be manually printed out for maintenance purpose.
If it is G4, the G4 communication protocol dump is printed out.

1. Title of the report
2. Date and time when the report was printed
3. Sender ID
4. Date of communication
5. Time of communication
6. One message transmission/reception time
7. Identification of remote station
   • CSI and/or telephone number
8. Mode of transmission/reception according to ITU-T designation
9. Total number of pages in communicaiton
10. Identification of the result of the communication
11. Service code
12. D channel
13. B channel
14. COMMN MODE
15. COMMN SPEED
16. FLOW CONTROL PARAM.
17. TID
18. SETUP
19. DISC
20. CR/CN, CA/CC, CQ/CI, RQ/RI, SQ/SI (page 2)
21. TBR/TCC/TCR/TCA (page 2)
22. CSS (page 2)
23. RSSP/RSSN (page 2)
24. CD/CL (page 2)
25. RDCLP (page 2)
26. CDS (page 2)
27. CDUI (page 2)

Protocol Dump

The printing image is as follows:

PROTOCOL DUMP P1

08/25/2000 19:00
ID=OKI TAKASAKI

DATA	TIME	S,R-TIME	DISTANT STATION ID	MODE	PAGES	RESULT
04/19	14:49	00’07"	OKI SHIBAURA(6412)	TX-G4	02	OK 0000

Dch.

TX	SETUP CONN-ACK +Bch+ DISC REL-C
RX	STATUS SETUP-ACK CONN +Bch+ REL
TX	
RX	

Bch.

TX	SABM SQ CR TCR CSS CDCL CDS CDUI CDPB CDUI CDPB CDUI CDPB CDUI CDUI
RX	UA SF CC TCA RSSP RDCLP RDPBP RDPBP RDPBP
TX	CDE CQ DISC
RX	RDEP CF UA
TX	
RX	
TX	
RX	

COMMN MODE
T.90

COMMN SPEED
64 kbps

FLOW CONTROL PA RAM.
2048(SPS)/7(SWS)/2048(RPS)/7(RWS)

TID
081-0273242117 =OKITAKASAKI

SETUP
08 01 05 05 04 02 88 90 6C 02 00 80 70 0B 80 30 32 37 33 32 38 30 30 30 31 7C 03 88 90 A9 7D 02
91 A1 00 00 00 00 00 00 00 00 00 00 00 00 00 00 00 00 00 00 00 00 00 00 00 00 00 00 00 00 00 00
00 00 00 00 00 00 00 00 00 00 00 00 00 00 00 00 00 00 00 00 00 00 00 00 00 00 00 00 00 00 00 00
00 00 00 00 00 00 00 00 00 00 00 00 00 00 00 00 00 00 00 00 00 00 00 00 00 00 00 00 00 00 00 00
00 00 00 00 00 00 00 00 00 00 00 00 00 00 00 00 00 00 00 00 00 00 00 00 00 00 00 00 00 00 00 00
00 00 00 00 00 00 00 00 00 00 00 00 00 00 00 00 00 00 00 00 00 00 00 00 00 00 00 00 00 00 00 00
00 00 00 00 00 00 00 00 00 00 00 00 00 00 00 00 00 00 00 00 00 00 00 00 00 00 00 00 00 00 00 00
00 00 00 00 00 00 00 00 00 00 00 00 00 00 00 00 00 00 00 00 00 00 00 00 00 00 00 00 00 00 00 00

DISC
45 16

Figure 6.7 (1/2) Protocol Dump P1 (G4)

PROTOCOL DUMP P2

```
CR/CN
00 00 00 00 00 00 00 00 00 00 00 00 00 00 00 00 00 00 00 00 00 00 00 00 00 00 00 00 00 00 00 00
00 00 00 00 00 00 00 00 00 00

CA/CC
00 00 00 00 00 00 00 00 00 00 00 00 00 00 00 00 00 00 00 00 00 00 00 00 00 00 00 00 00 00 00 00
00 00 00 00 00 00 00 00 00 00

CQ/CI
00 00 00 00 00

RQ/RI
00 00 00 00 00

SQ/SI
00 00 00 00 00

TBR
 00

TCC
00

TCR
09 E0 00 00 00 01 00 C0 01 0B 00 00 00 00 00 00

TCA
09 D0 00 01 00 01 00 C0 01 0B 00 00 00 00 00 00

CSS
0D 6F 01 2A 0A 18 30 38 31 2D 3D 20 20 20 20 20 20 20 20 20 20 20 20 20 20 20 20 20 20 20 0B 0E
39 37 2D 30 38 2D 32 37 2D 31 34 2D 34 34 02 03 0E 01 01 08 01 01 C1 08 A4 06 80 01 02 81 01 00
E8 2F 00 01 79 00 E0 1C C1 10 50 61 6E 61 66 61 78 20 55 46 2D 42 38 30 20 20 C2 02 36 35 C4 04
30 30 30 30 E1 0B E0 06 C0 01 01 C1 01 01 C1 01 00 00 00 00 00 00 00 00 00 00 00 00 00 00 00 00
00 00 00 00 00 00 00 00 00 00 00 00 00 00 00 00 00 00 00 00 00 00 00 00 00 00 00 00 00 00 00 00
00 00 00 00 00 00 00 00 00 00 00 00 00 00 00 00 00 00 00 00 00 00 00 00 00 00 00 00 00 00 00 00

RSSP/RSSN
0E 69 01 2A 09 18 30 38 31 2D 3D 20 20 20 20 20 20 20 20 20 20 20 20 20 20 20 20 20 20 20 0B 0E
39 38 2D 30 36 2D 30 32 2D 31 33 3A 34 36 02 03 0E 01 01 08 01 01 C1 08 A4 06 80 01 02 81 01 00
E8 29 00 01 79 00 E0 16 C1 10 50 61 6E 61 66 61 78 20 55 46 2D 42 38 30 20 20 C2 02 36 35 E1 0B
E0 06 C0 01 01 C1 01 01 C1 01 00 00 00 00 00 00 00 00 00 00 00 00 00 00 00 00 00 00 00 00 00 00
00 00 00 00 00 00 00 00 00 00 00 00 00 00 00 00 00 00 00 00 00 00 00 00 00 00 00 00 00 00 00 00
00 00 00 00 00 00 00 00 00 00 00 00 00 00 00 00 00 00 00 00 00 00 00 00 00 00 00 00 00 00 00 00

CDCL
3D 58 12 01 3C C1 4D A4 4B 80 01 02 81 01 00 A2 3C A2 32 30 08 80 02 26 C0 81 02 36 CE 30 08 80
02 2F 6D 81 02 43 2C 30 08 80 02 2F 6C 81 02 43 2C 30 08 80 02 2E 23 81 02 41 25 30 08 80 02 36
CE 81 02 4D 80 A4 06 8B 01 04 8B 01 01 E4 05 E1 03 C0 01 01 E8 04 00 01 49 00 00 00 00 00 00 00
00 00 00 00 00 00 00 00 00 00 00 00 00 00 00 00 00 00 00 00 00 00 00 00 00 00 00 00 00 00 00 00

RDCLP
3E 40 C1 3E A4 3C 80 01 02 81 01 00 A2 25 A2 1E 30 08 80 02 26 C0 81 02 36 CE 30 08 80 02 2F 6C
81 02 43 2C 30 08 80 02 2F 6D 81 02 43 2C A4 03 8B 01 04 E4 0D E0 06 02 01 02 02 01 03 E1 03 C0
01 01 00 00 00 00 00 00 00 00 00 00 00 00 00 00 00 00 00 00 00 00 00 00 00 00 00 00 00 00 00 00
00 00 00 00 00 00 00 00 00 00 00 00 00 00 00 00 00 00 00 00 00 00 00 00 00 00 00 00 00 00 00 00
CDS
2D 40 29 03 30 30 31 C1 39 A4 37 80 01 02 81 01 00 A2 28 A2 1E 30 08 80 02 26 C0 81 02 36 CE 30
08 80 02 2F 6D 81 02 43 2C 30 08 80 02 2F 6C 81 02 43 2C A4 06 8B 01 04 8B 01 01 E4 05 E1 03 C0
01 01 00 00 00 00 00 00 00 00 00 00 00 00 00 00 00 00 00 00 00 00 00 00 00 00 00 00 00 00 00 00
00 00 00 00 00 00 00 00 00 00 00 00 00 00 00 00 00 00 00 00 00 00 00 00 00 00 00 00 00 00 00 00
CDUI
01 00 A2 03 02 01 00 A2 1B 02 01 02 31 16 A4 08 80 02 26 C0 81 02 36 CE A6 05 A1 03 82 01 01 E9
03 C0 01 00 A3 80 31 06 A2 04 80 02 06 C0 24 80 04 82 07 90 01 01 00 00 00 00 00 00 00 00 00 00
01 01 00 00 00 00 00 00 00 00 00 00 00 00 00 00 00 00 00 00 00 00 00 00 00 00 00 00 00 00 00 00
00 00 00 00 00 00 00 00 00 00 00 00 00 00 00 00 00 00 00 00 00 00 00 00 00 00 00 00 00 00 00 00
```

Figure 6.7 (2/2) Protocol Dump P2 (G4)

6.15 System Reset

1. Purpose

To clear or initialize the following data:

(a) Location data

(b) Configuration data (default)

2. Procedure

Operations:

- Press SELECT FUNCTION key, COPY key twice. (In case of no message in the memory)
- Enter 3.
- To bring the LCD up to the desired message, press ← key and → key.

Note: ALL DATA CLEAR is to clear or initialize (a) to (b).

The display shows:

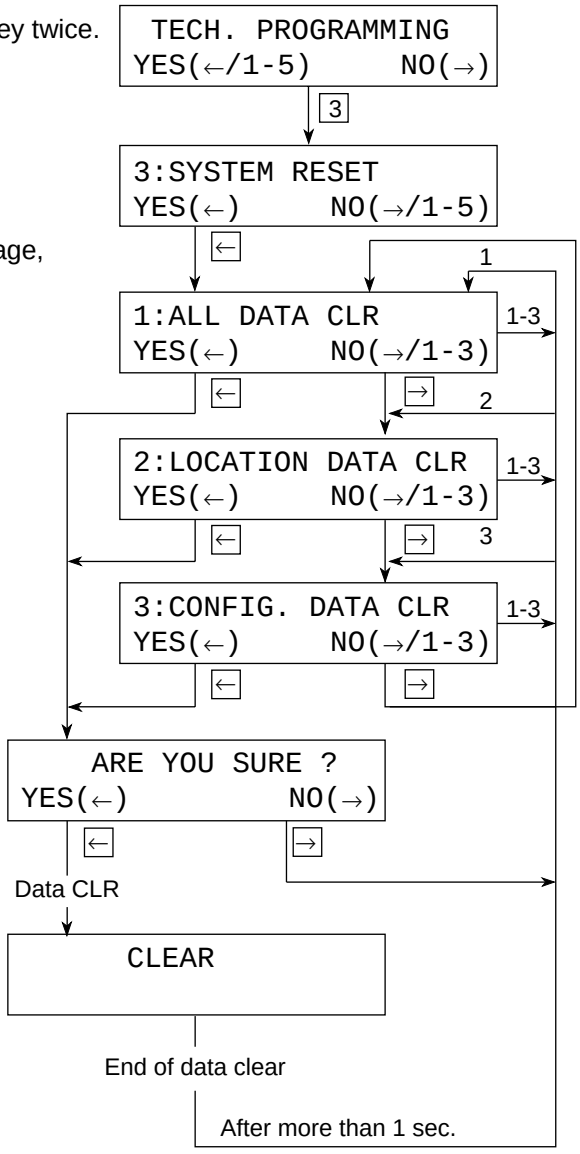

6.16 Service Codes

1) The service code can be printed on Activity Report to recognize the result of each communication.

2) The activity report indicates the code ”0000", should a communication terminates on normal status as a service code.

3) The activity report indicates one of the codes of “90XX”, should a communication terminates on abnormal status, as an error code.

4) Besides the above codes of “90XX”, the following codes are prepared for identifying an abnormal status in details.

-21XX:	For error codes in Group 3 transmission phase B
-29XX:	For error codes in Group 3 reception phase B
-39XX:	For error codes in Group 3 reception phase C
-41XX:	For error codes in Group 3 transmission phase D
-49XX:	For error codes in Group 3 reception phase D
-90XX:	Common error codes
-AEXX:	ISDN Common error codes
-BBXX:	ISDN Dch layer 2
-BAXX:	ISDN Dch layer 3
-BCXX:	ISDN Bch layer 2
-B2XX:	ISDN Bch layer 3
-B7XX:	ISDN Bch layer 4
-B9XX:	ISDN Bch layer 5
-B8XX:	ISDN Bch layer 6

Table 6.3 (1/3) Service Codes List

Code	Description
0000	Successful end of communication.
1080	STOP key has been pressed while calling a remote fax.
10A2	Busy tone detected.
14C0	Dial tone not detected.
14C1	Line current not detected.
14C2	Calling-and-waiting for line connection time out.
14C3	Dialling limit time out.
14D0	DTMF tone “D” is received from the Fax2Net Server.
14D1	Wait time out upon DTMF tone “A” is not received from the Fax2Net Server.
14D2	Wait time out upon DTMF tone “B” or “D” is not received from the Fax2Net Server.
21A0	Received signal other than DIS/DTC.
21A1	Contents of received DIS/DTC are faulty.
21A3	Each time there is no response from the receiver for sending TCF three times.
21A4	TCF fall back is not possible.
21A5	Received signal other than the desired signal in response to sending TCF.
21B0	Transmitter tried to transmit by confidential transmission function but the remote fax has not the capability of confidential reception.
21B1	Transmitter tried to transmit by Broadcast Initiate function but the remote fax has not the broadcast capability.
21C0	In Closed Network setting, TSI/CIG/CSI is either not received or, if received, it is not authorized one.
21E0	Contents of CM/JM are faulty at transmission side.
21E1	Phase 2 time out at transmission side.
21E2	Phase 3 time out at transmission side.
21E3	Training time out of phase B control channel at transmission side.
29B6	In Confidential Reception, the mail box specified by transmitter is not set up and open.
29B7	In Relay Broadcast Reception, the specified group number is erroneous.

Table 6.3 (2/3) Service Codes List

Code	Description
29C1	In closed Network setting, TSI/CSI is either not received or, if received, it is not authorized one.
29E0	Contents of CM/JM are faulty at receive side.
29E1	Phase 2 time out at receive side.
29E2	Phase 3 time out at receive side.
29E3	Training time out of phase B control channel at receive side.
29F1	In Relay Broadcast Reception, the relay password is unmatched.
39A0	The number of continuous-error lines have exceeded the specified limit.
39A1	The number of random-error lines have exceeded the specified limit.
39B0	Memory Overflow has occurred while receiving in memory.
39B1	Memory Overflow occurred during Confidential Reception.
39B2	Memory overflow occured during Relay Broadcast Reception.
39C0	DECODER hardware error. (cannot reproduce picture)
39C1	DECODER hardware error. (cannot detect end of picture)
41A0	There was no response each time in response to the three post commands.
41A6	Received signal other than the desired signal in responce to the post command.
41A9	Fall back in Phase C is not possible.
41C8	T5 time out.
41CE	Received negative signal in response to the post command.
41E0	Control chanel data. Time out in Phase D.
49CC	Received signal other than the desired signal in response to RNR.
49CD	Command not received in response to RNR.
49CF	In Relay Broadcast Reception, reception is interrupted due to defective image quality.
49E0	Data time out of
49E1	Fall back in Phase C is not possible.
60A0	Broadcast completed.
6803	DCN received in response to NSF/DIS without sending a single picture.
9080	Pressed STOP key.
9081	T1 time out.
9082	T2 time out.

Table 6.3 (3/3) Service Codes List

Code	Description
9083	T3 time out.
9084	No recording paper.
9087	Document jam.
9088	60-minute or 70-minute time out.
9089	Document length has exceeded its maximum limit.
908E	Recording paper jam.
9090	Received DCN.
909D	Telephone number to be called to the Fax2Net is the wrong number.
90B1	Picture memory hash error.
90C1	Document removed prior to transmission.
90C6	Normal or error-free lines not received for 13 seconds.
90C7	Error frame protocol received.
90D4	Hardware error in transmission system. (response of modem not detected)
90D5	ENCODER error. (Picture storage fault)
90F0	Option (2'nd tray) error.
90F1	Fan motor error.
90F2	Fuser error.
90F3	Recording paper size error.
90F4	Cover open.

6.16.2 G4 Service Code Lists

Table 6.4 (1/3) G4 Service Code Lists

Classification	Code	Description	Alarm	Result	Remarks
Dch layer 2	BB02	LSI NG	ON	NG	ISDN board error
	BB05	TEI release by network	ON	NG	
	BB06	TEI verification procedure failure	ON	NG	
Dch layer 3	BA01	Unallocated (unassigned) number	ON	NG	
	BA02	No route to specified transit network	ON	NG	
	BA03	No route to destination			Handling in the G3 fallback
	BA06	Channel unacceptable	ON	NG	
	BA07	Call awarded and being delivered in an established channel	ON	NG	
	BA10	Procedure sequence error, Line disconnected during in-band procedure			
	BA11	User busy			Handling of the redial
	BA12	No user responding			Handling in the G3 fallback
	BA13	No answer from user (user alerted)	ON	NG	
	BA15	Call rejected	ON	NG	
	BA16	Number changed	ON	NG	
	BA1A	Non-selected user clearing	ON	NG	
	BA1B	Destination out of order	ON	NG	
	BA1C	Invalid number format	ON	NG	
	BA1D	Facility rejected	ON	NG	
	BA1E	Response to STATUS-ENQUIRY	ON	NG	
	BA1F	Normal, unspecified	ON	NG	
	BA22	No circuit/channel available			Handling of the redial
	BA26	Network out of order	ON	NG	
	BA29	Temporary failure			Handling of the redial
	BA2A	Switching equipment congestion	ON	NG	
	BA2B	Access information discarded	ON	NG	
	BA2C	Requested circuit/channel not available			Handling of the redial
	BA2F	Resources unavailable, unspecified	ON	NG	
	BA31	Quality of service unavailable	ON	NG	
	BA32	Requested facility not subscribed	ON	NG	
	BA39	Bearer capability not authorized			Handling in the G3 fallback
	BA3A	Bearer capability not presently available			Handling in the G3 fallback
	BA3F	Service or option not available, unspecified			Handling in the G3 fallback
	BA41	Bearer capability not implemented			Handling in the G3 fallback
	BA42	Channel type not implemented	ON	NG	
	BA45	Requested facility not implemented	ON	NG	
	BA46	Only restricted digital information bearer capability is available			Handling in the G3 fallback
	BA4F	Service or option not implemented, unspecified			Handling in the G3 fallback
	BA51	Invalid call reference value	ON	NG	
	BA52	Identified channel does not exist	ON	NG	
	BA53	A suspended call exists, but this call identity does not	ON	NG	
	BA54	Call identity in use	ON	NG	
	BA55	No call suspended	ON	NG	
	BA56	Call having the requested call identity has been cleared	ON	NG	
	BA58	Incompatible destination			Handling in the G3 fallback
	BA5B	Invalid transit network selection	ON	NG	
	BA5F	Invalid message, unspecified	ON	NG	
	BA60	Mandatory information element is missing	ON	NG	
	BA61	Message type non-existent or not implemented	ON	NG	
	BA62	Message not compatible with call state or message type non-existent or not implemented	ON	NG	
	BA63	Information element non-existent or not implemented	ON	NG	
	BA64	Invalid information element contents	ON	NG	
	BA65	Message not compatible with call state	ON	NG	
	BA66	Recovery on timer expiry	ON	NG	
	BA6F	Protocol error, unspecified			Handling in the G3 fallback
	BA7F	Interworking, unspecified			Handling in the G3 fallback
	BB01	CONN message wait time out	ON	NG	
	BB07	Reset request by network	ON	NG	

Table 6.4 (2/3) G4 Service COde Lists

Classification	Code	Description	Alarm	Result	Remarks
Bch layer 2	BC02	N2 times time out	ON	NG	
	BC03	FRMR reception	ON	NG	
	BC04	FRMR transmission	ON	NG	
	BC05	The other party link disconnection	ON	NG	
	BC08	T3 time out	ON	NG	
	BD01	SABME wait time out	ON	NG	
Bch layer 3	B201	The other party terminal busy	ON	NG	
	B203	Incorrect facility request	ON	NG	
	B205	Network congestion	ON	NG	
	B209	Connection impossible (failure or absent)	ON	NG	
	B210	Packet that is not adaptable to status transition (Packet level ready state)	ON	NG	
	B211	Remote procedure error	ON	NG	
	B212	Packet that is not adaptable to status transition (DTE restart request state)	ON	NG	
	B213	Local procedure error	ON	NG	
	B214	Packet that is not adaptable to status transition (Empty state)	ON	NG	
	B215	Packet that is not adaptable to status transition (CO packet wait)	ON	NG	
	B216	Packet that is not adaptable to status transition (CA packet wait)	ON	NG	
	B217	Packet that is not adaptable to status transition (During data transmission)	ON	NG	
	B218	Packet that is not adaptable to status transition (Outgoing/incoming collision)	ON	NG	
	B219	Packet that is not adaptable to status transition (CQ packet)	ON	NG	
	B221	Unallowable packet (Packet type not clear)	ON	NG	
	B222	Unallowable packet (Call by special incoming logic channel)	ON	NG	
	B226	Unallowable packet (Too short packet)	ON	NG	
	B227	Unallowable packet (Too long packet)	ON	NG	
	B229	Unallowable packet (Restart packet in which LCN or LCGN is not 0)	ON	NG	
	B22A	Unallowable packet (Packet that is not adaptable to the facility)	ON	NG	
	B231	Timer time out (CA packet wait time out)	ON	NG	
	B232	Timer time out (CF packet wait time out)	ON	NG	
	B233	Timer lapsed (RR/RNR packet wait time out)	ON	NG	
	B241	Call setting problem (unallowable facility code)	ON	NG	
	B242	Call setting problem (unallowable facility parameter)	ON	NG	
	B243	Call setting problem (incoming address is invalid)	ON	NG	
	B244	Call setting problem (outgoing address is invalid)	ON	NG	
	B245	Call setting problem (invalid facility length)	ON	NG	
	B246	Call setting problem (call termination reject)	ON	NG	
	B247	Call setting problem (No empty logic channel)	ON	NG	
	B248	Call setting problem (outgoing/incoming collision)	ON	NG	
	B249	Call setting problem (overlapped facility request)	ON	NG	
	B24A	Call setting problem (address length other than zero)	ON	NG	
	B24B	Call setting problem (facility length other than zero)	ON	NG	
Bch layer 4	B702	Reception TDT length over	ON	NG	
	B703	TDT length negotiation unsuccessful	ON	NG	
	B704	Invalid block received	ON	NG	
	B705	Abnormal parameter received	ON	NG	
	B706	Illegal block received	ON	NG	
	B707	TCR wait time out (T0.2 T.O)	ON	NG	
	B708	TCA wait time out (T1.1 T.O)	ON	NG	
	B709	Communication interruption due to TCC reception	ON	NG	
	B70A	Communication interruption due to TBR reception	ON	NG	

Table 6.4 (3/3) G4 Service COde Lists

Classification	Code	Description	Alarm	Result	Remarks
Bch layer 5	B901	Command response reception error	ON	NG	
	B902	Non-implicit command response received	ON	NG	
	B903	Lack of essential parameter	ON	NG	
	B904	Invalid parameter reception	ON	NG	
	B905	Invalid parameter value reception	ON	NG	
	B906	Window size over reception	ON	NG	
	B907	Document reference number error	ON	NG	
	B908	Length illegal	ON	NG	
	B909	Check point error	ON	NG	
	B90A	Unallowable document	ON	NG	
Bch layer 6	B801	Command response reception error	ON	NG	
	B802	Parameter reception error	ON	NG	
	B803	Negotiation unsuccessful RSSP reception	ON	NG	
	B804	Negotiation unsuccessful RSSN reception	ON	NG	
	B805	CSCC at the time when the transmission right cannot be reversed	ON	NG	
	B806	CSA reception	ON	NG	
	B809	Error recovery time out	ON	NG	
	B80A	Time out at the time of termination	ON	NG	
	B80B	Close wait time out	ON	NG	
	B80C	CSE reception before close	ON	NG	
Bch layer 7	AE01	Negotiation unsuccessful (requirement for communication with the other party FAX is not met)	ON	NG	
	AE02	Negotiation unsuccessful (only the other party standard)	ON	NG	
	AE03	The other party SUD fault	ON	NG	
	AE04	Basic terminal function unmatched	ON	NG	
	AE05	Switching type unmatched	ON	NG	
	AE06	The other party TU fault	ON	NG	

If "redial" is applicable, the redial operation is entered depending on the number of redial times. If the redial operation cannot be entered (i.e. the number of redial times is 0 or the residual number of redial times is 0), Alarm=ON and Result=BUSY occur as with PSTN.

If "G3 fallback" is applicable, the dial operation in G3 mode is entered.
If a service code to which "G3 fallback" is applicable occurs regardless of dialing in G3 mode, a communication error is assumed and Alarm=ON and Result=NG occur.

7. TROUBLESHOOTING AND REPAIR FOR OKIFAX 5650

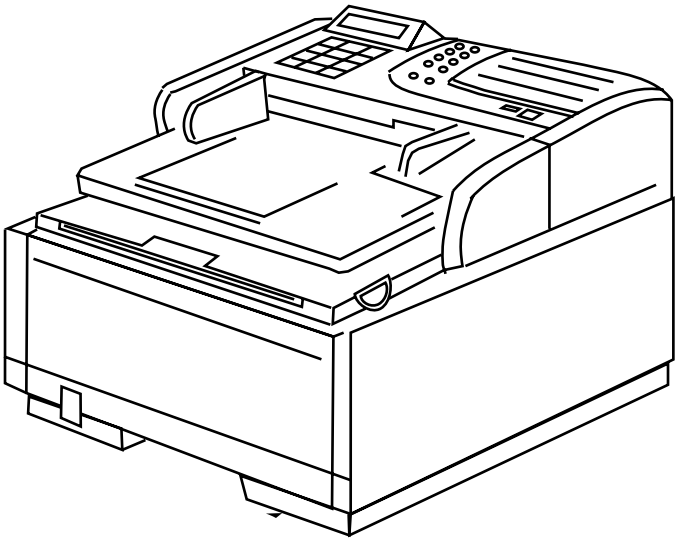

This chapter contains:

(a) Troubleshooting flow charts related to general operations
(b) Troubleshooting flow charts by test operations
(c) Troubleshooting flow charts placing an emphasis on mechanical portions

Section No.	Name of Flow Chart	(a)	(b)	(c)	Page
7.1	Overall troubleshooting flow chart	◯	◯		237
7.2	No LCD operation	◯			238
7.3	ALARM LED on	◯			239
7.4	Printing test failure	◯	◯		240
7.5	No local copy	◯	◯		241
7.6	Auto dial failure	◯			242
7.7	Transmission problem	◯			243
7.8	Auto reception failure	◯			245
7.9	Reception problem	◯			246
7.10	Sensor calibration test		◯		247
7.11	LED test		◯		248
7.12	Tone send test		◯		249
7.13	High-speed modem test		◯		250
7.14	MF (Tone) send test		◯		252
7.15	Tone (TEL/FAX) send test		◯		253
7.16	No acoustic line monitor	◯			254
7.17	Low power supply unit	◯			255
7.18	High power supply unit	◯			255
7.19	No document feeding			◯	257
7.20	Multiple document feeding			◯	258
7.21	Document skew			◯	259
7.22	Document jam			◯	261
7.23	Printer unit				262

7.1 Overall Troubleshooting Flow Chart

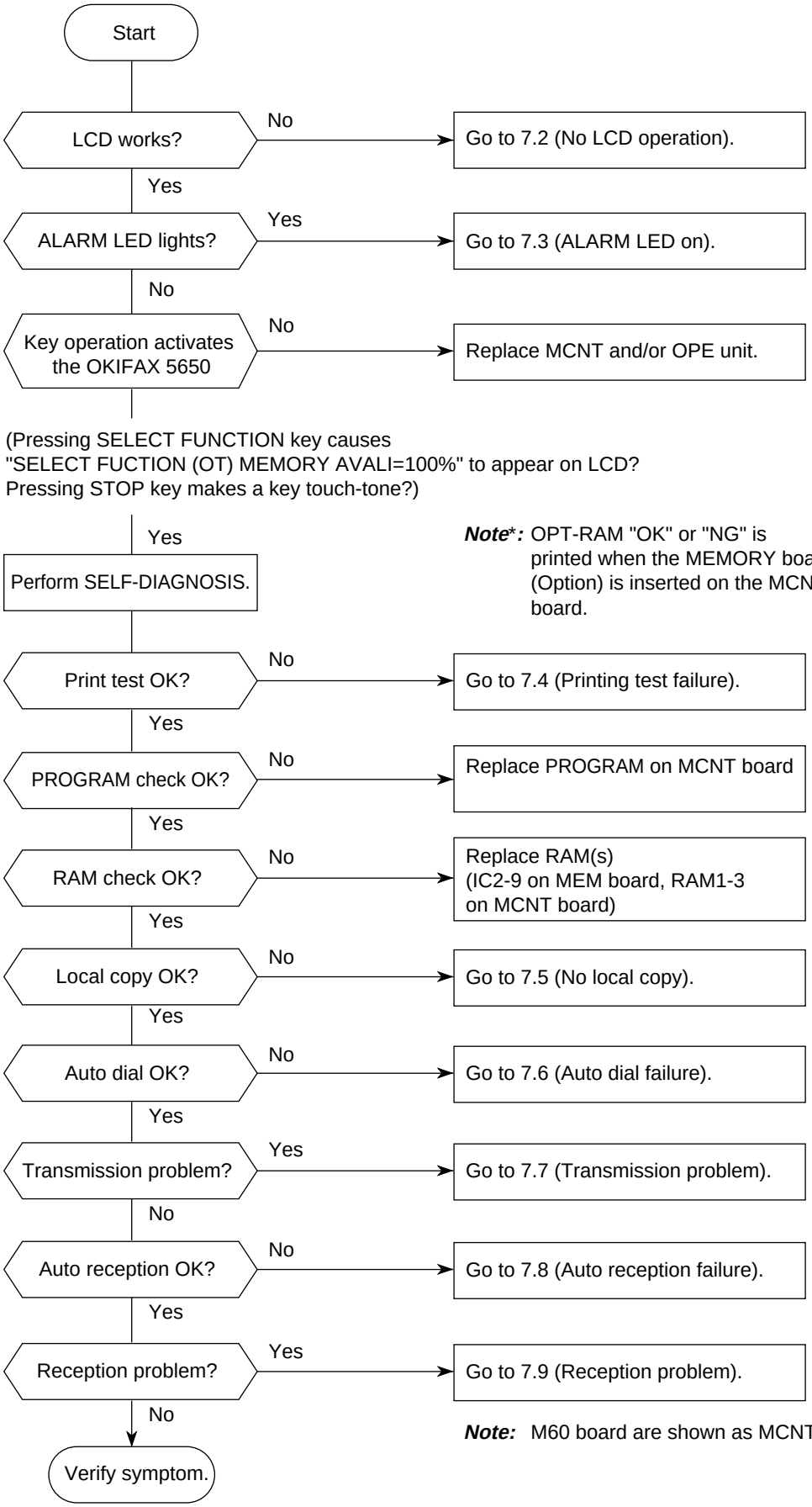

7.2 No LCD Operation

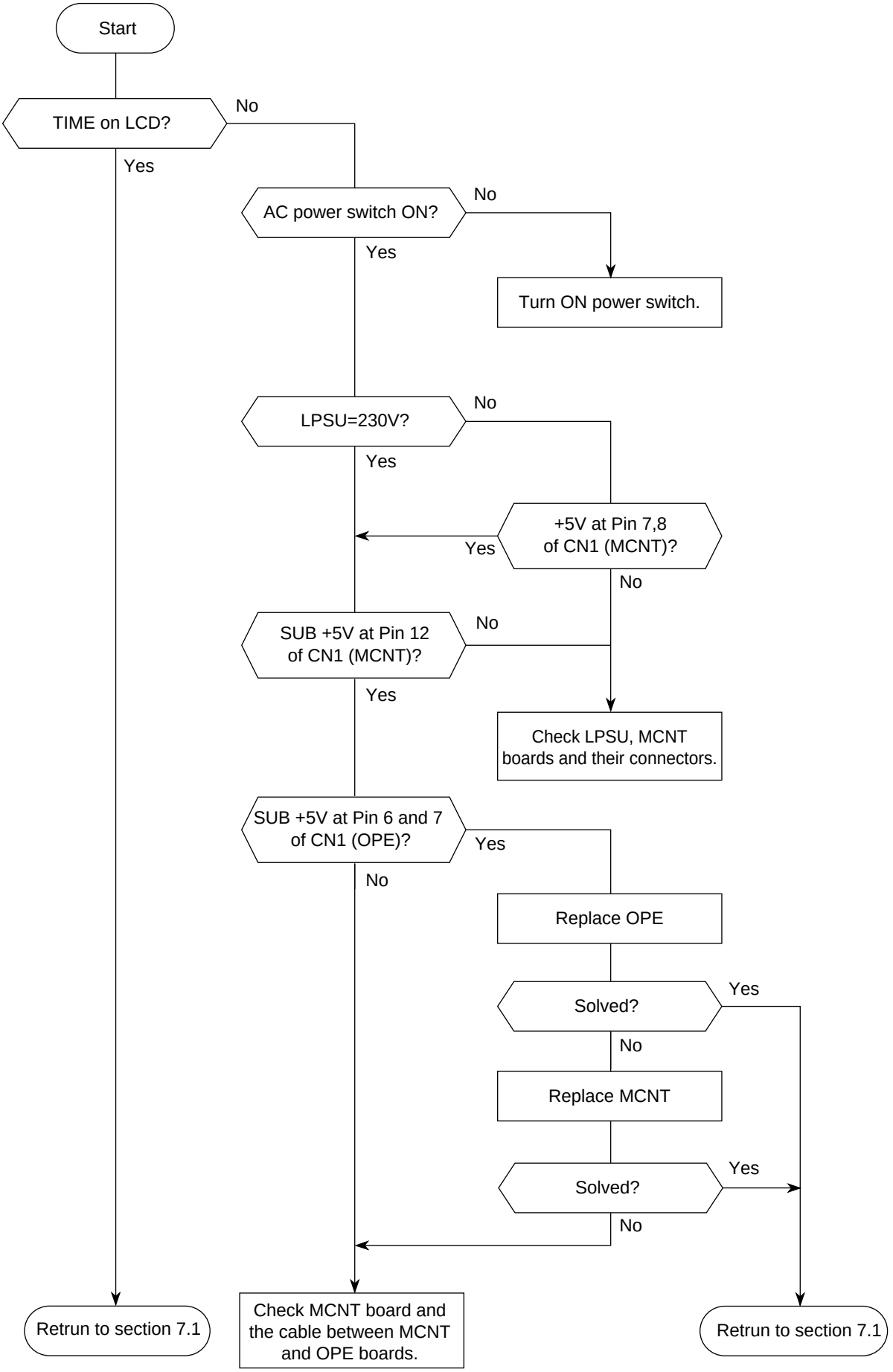

Note: P60 board are show as OPE.

7.3 ALARM LED On

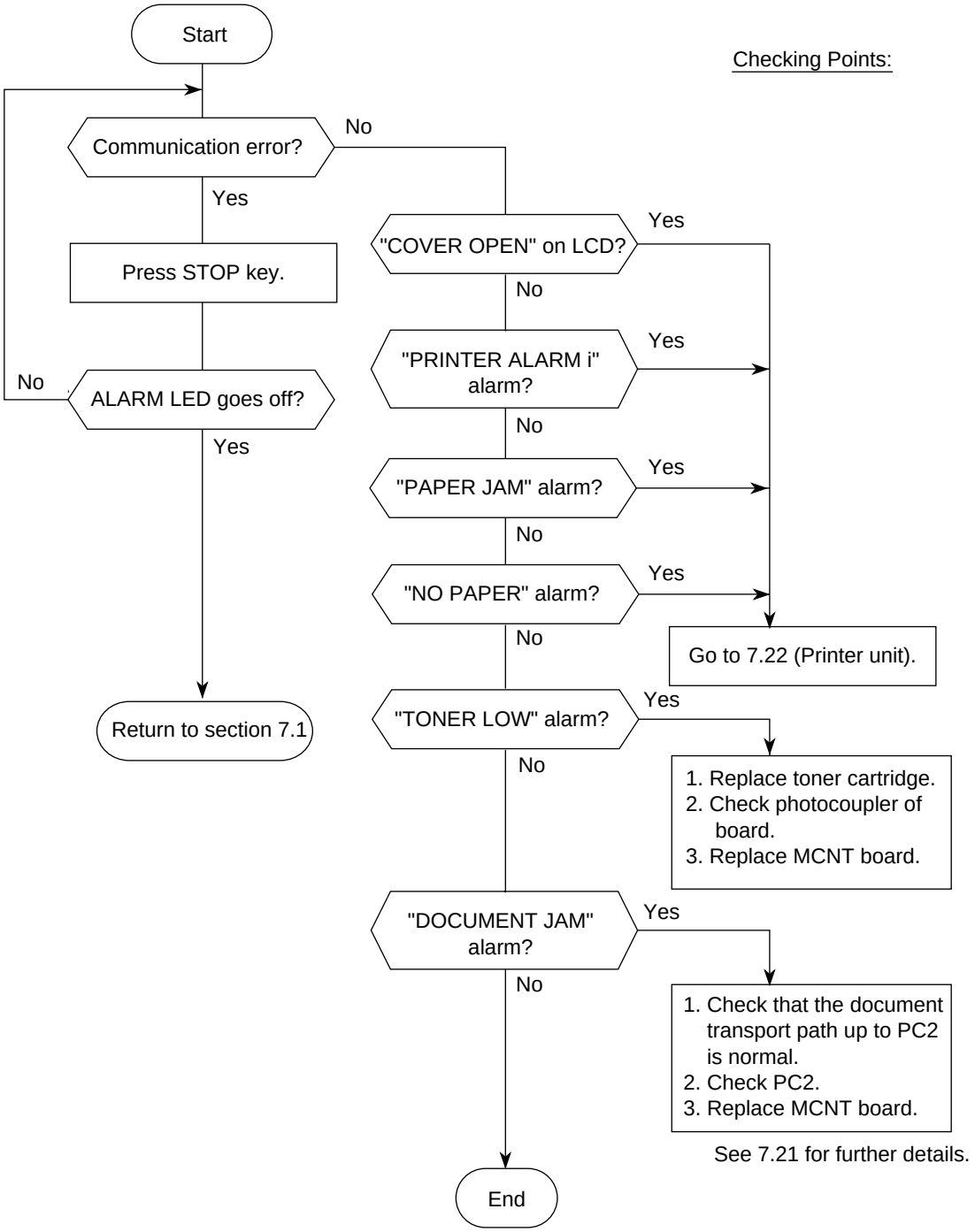

Note* : "PRINTER ALARM i" will be shown as follows:
PRINTER ALARM 2 to PRINTER ALARM 4.

7.4 Printing Test Failure

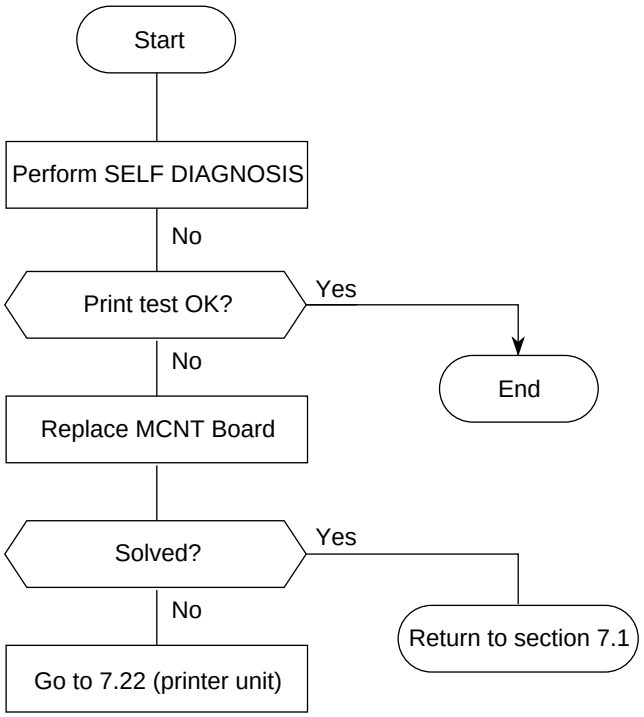

7.5 No Local Copy

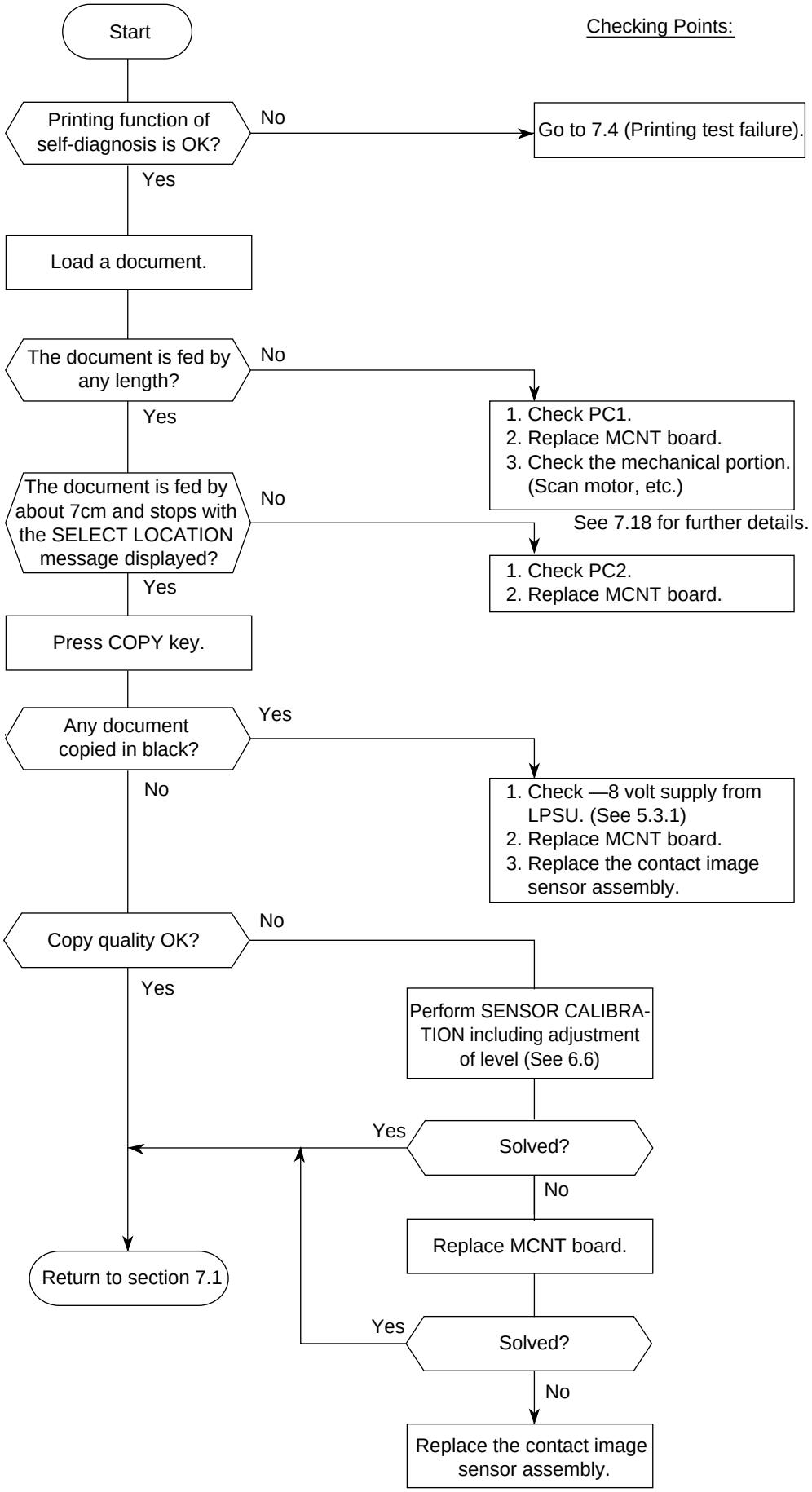

7.6 Auto Dial Failure

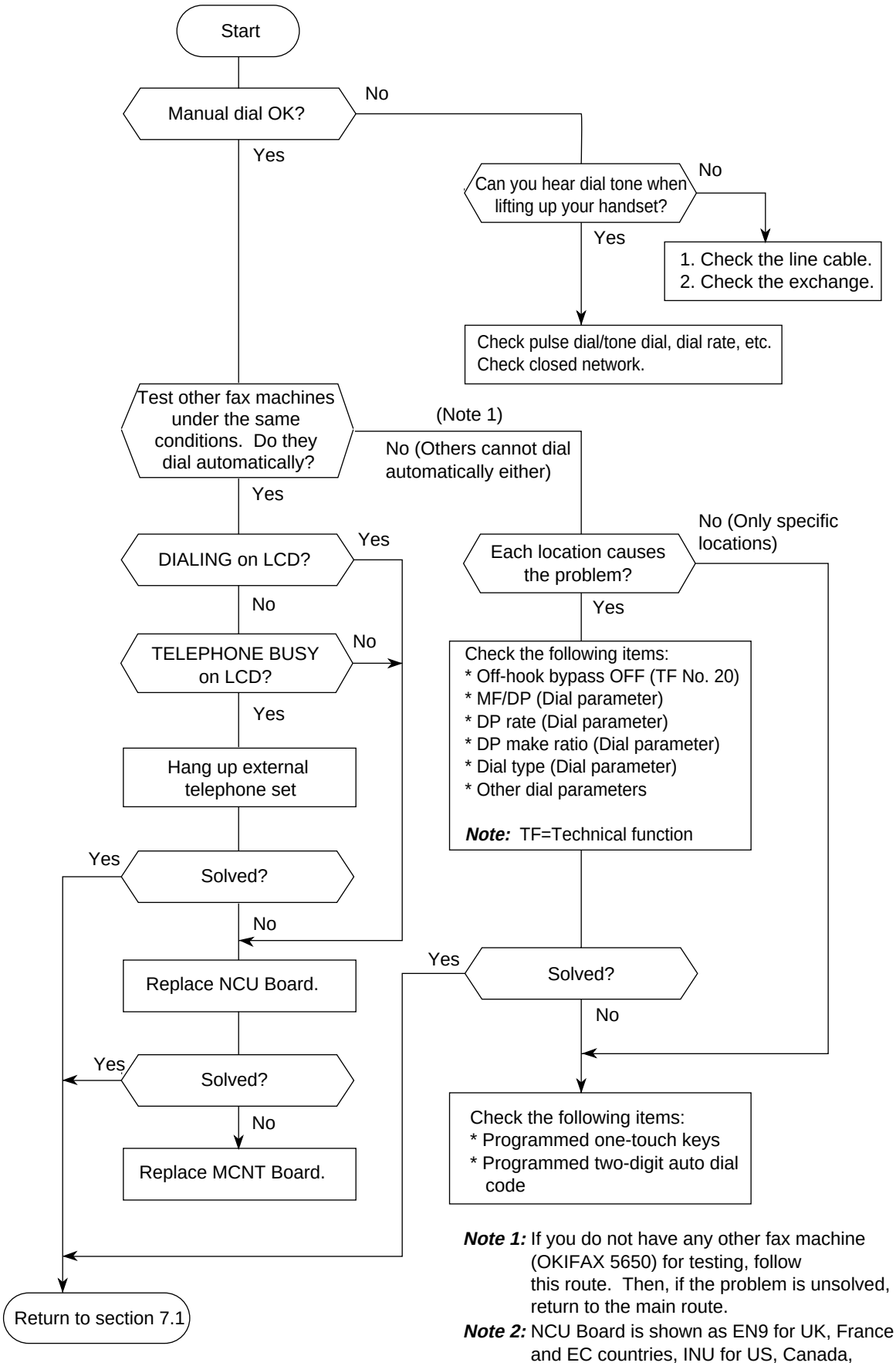

Note 1: If you do not have any other fax machine (OKIFAX 5650) for testing, follow this route. Then, if the problem is unsolved, return to the main route.

Note 2: NCU Board is shown as EN9 for UK, France and EC countries, INU for US, Canada, Australlia, New Zealand, Singapore, Malayashija And new EC countries (Poland etc.)

7.7 Transmission Problem

This section explains how to localize the cause of problems occurred after completion of connection with a remote station.

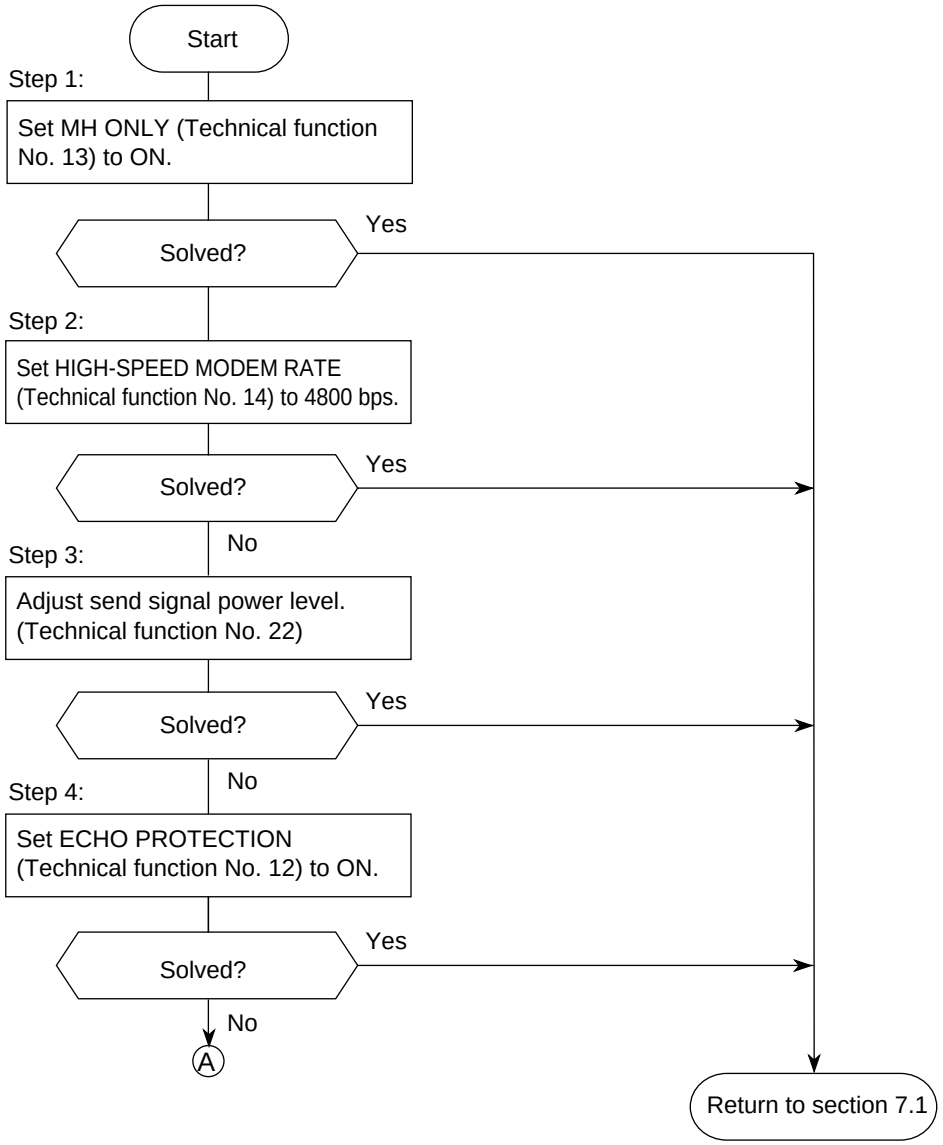

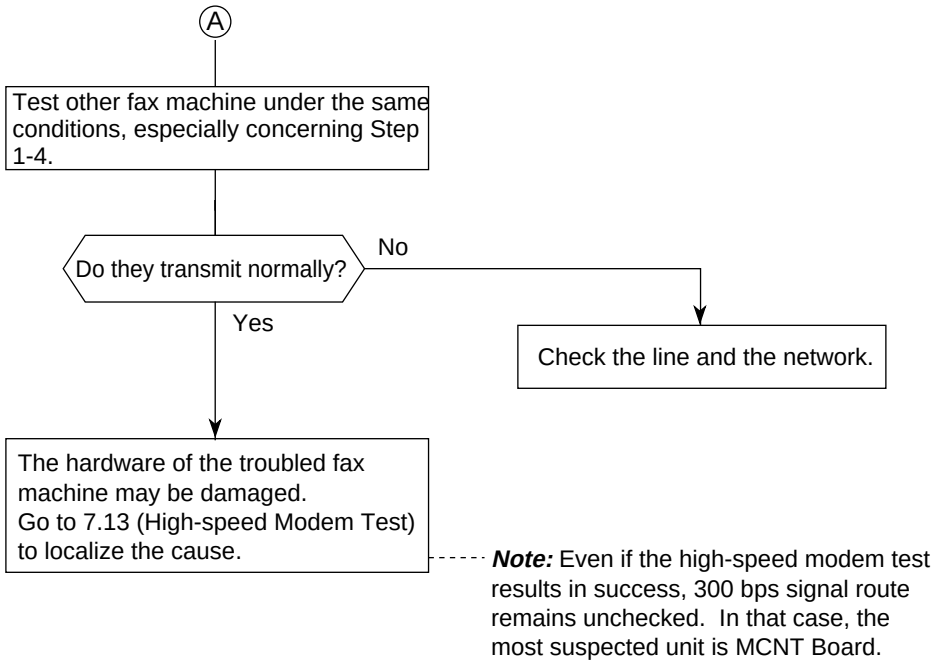

Description: Protective tone is 1700 Hz/200 ms.
This signal is added to training signal to protect the training signal against echo as follows.

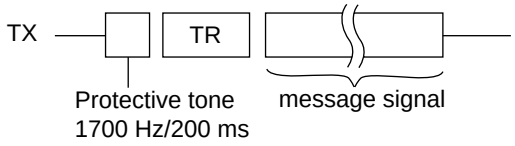

7.8 Auto Reception Failure

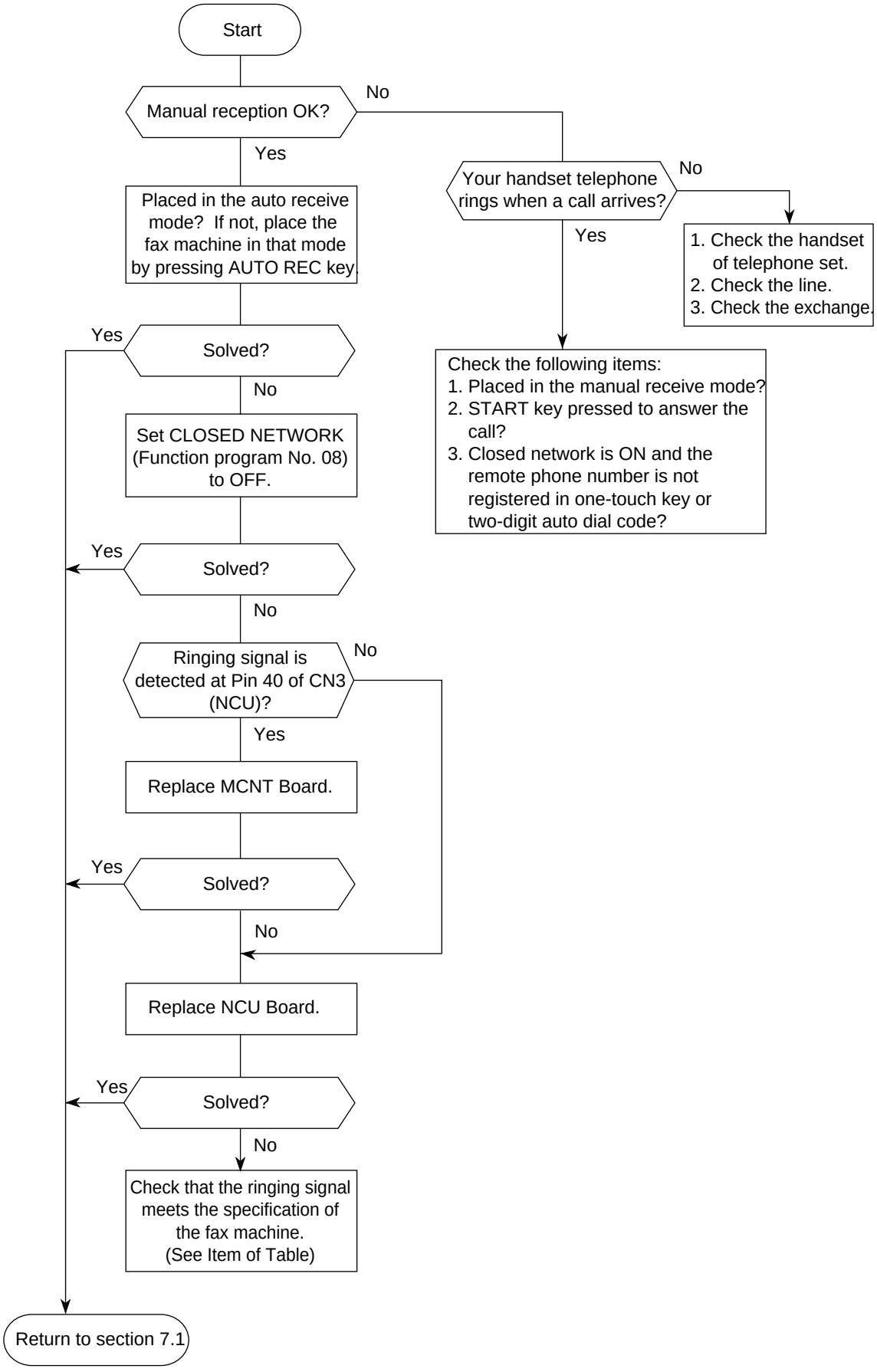

7.9 Reception Problem

This section explains how to localize the cause of problems occurred after completion of connection with a remote station.

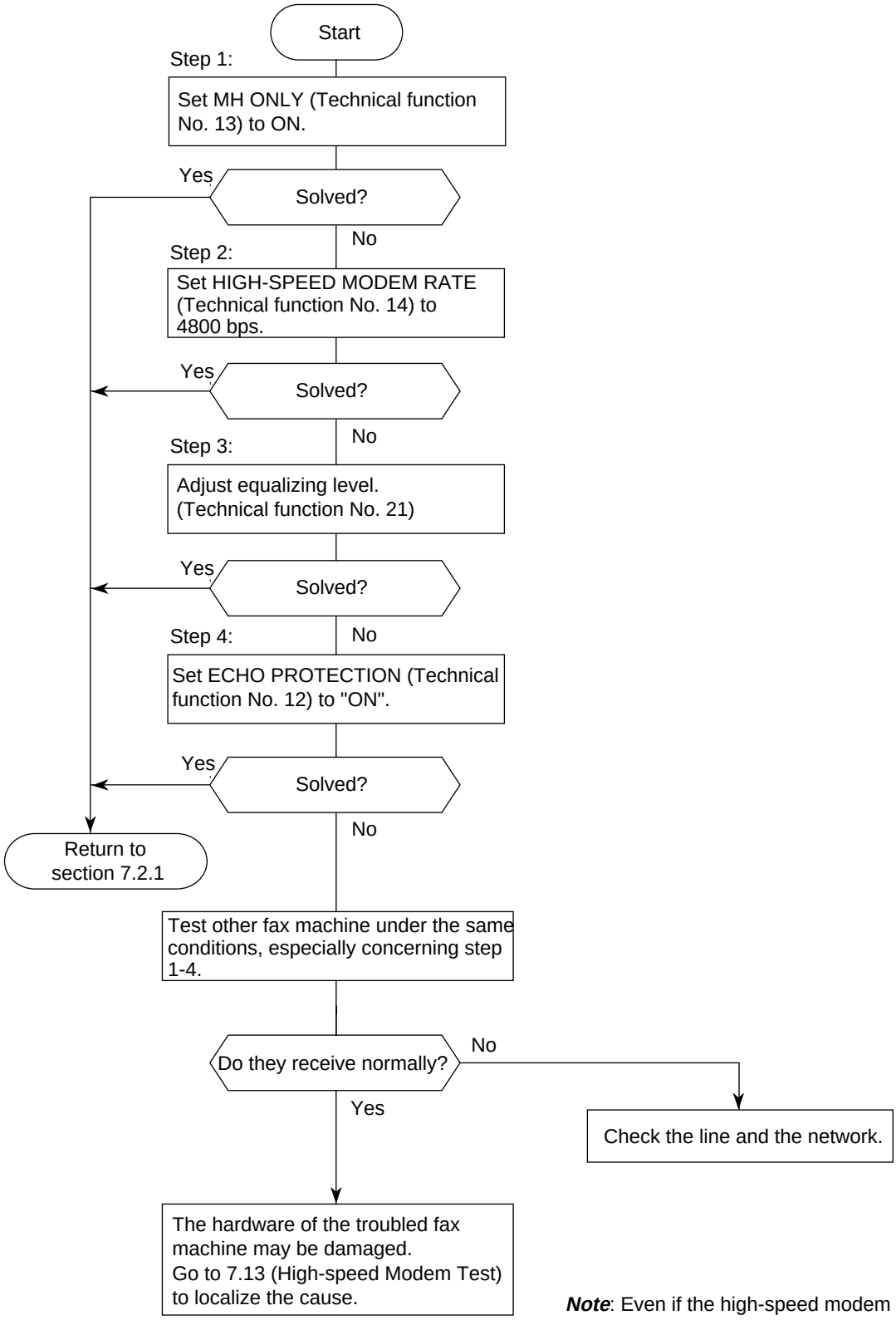

Note: Even if the high-speed modem test results in success, 300 bps signal route remains unchecked. In that case, the most suspected unit is MCNT board.

7.10 Sensor Calibration Test

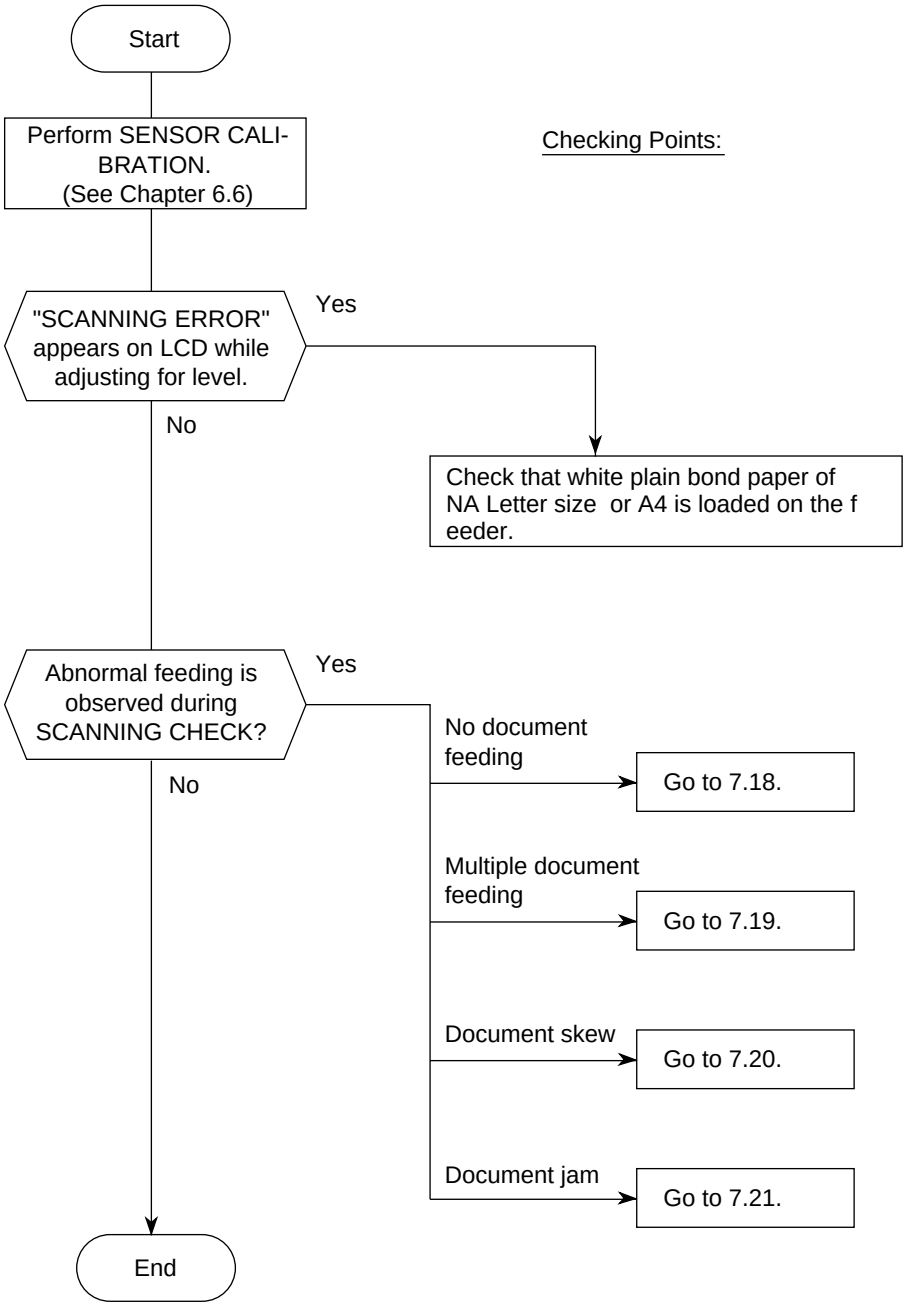

7.11 LED Test

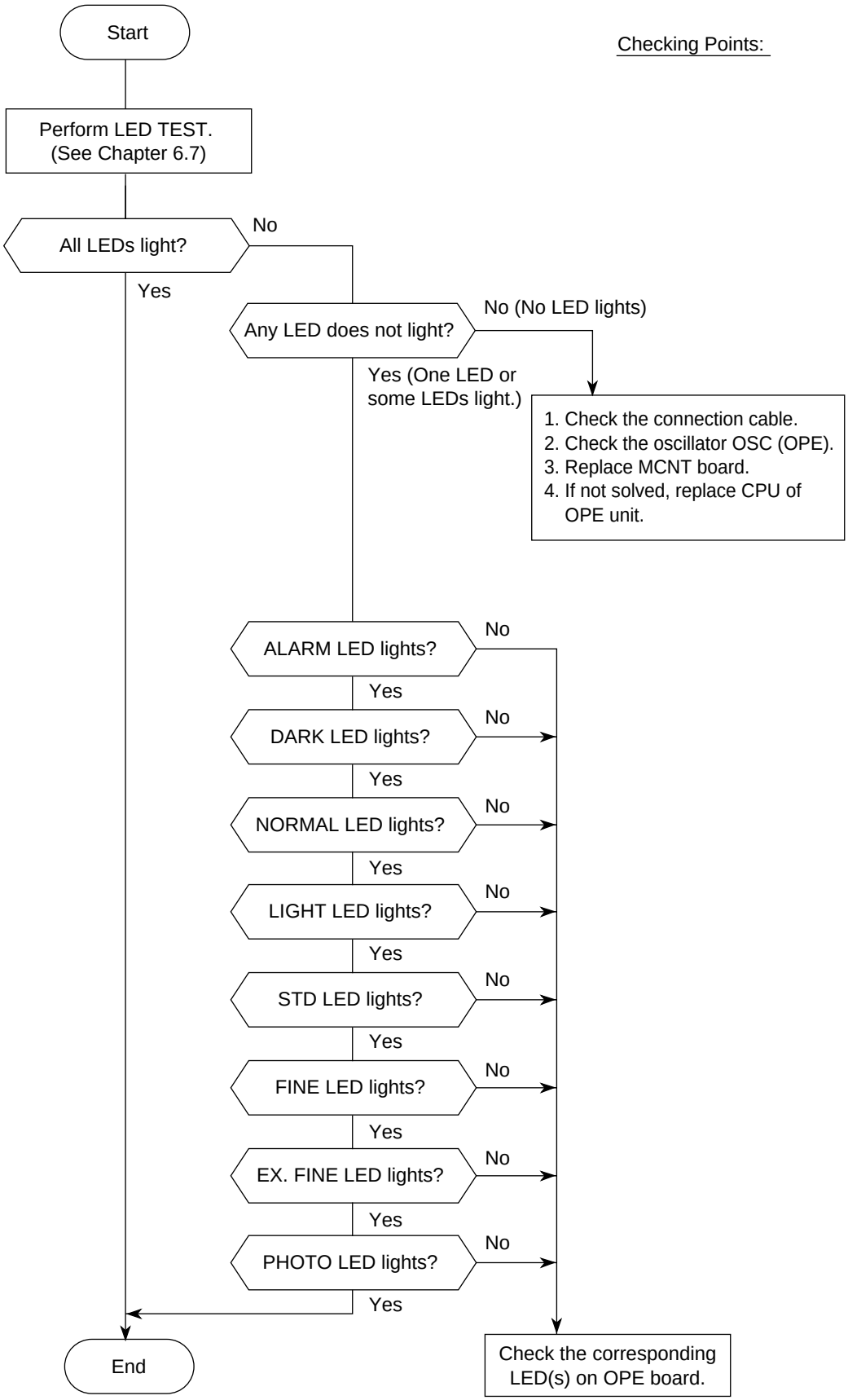
Start
Checking Points:
Perform LED TEST.
(See Chapter 6.7)
All LEDs light?
No
Yes
Any LED does not light?
No (No LED lights)
Yes (One LED or some LEDs light.)
1. Check the connection cable.
2. Check the oscillator OSC (OPE).
3. Replace MCNT board.
4. If not solved, replace CPU of OPE unit.
ALARM LED lights?
DARK LED lights?
NORMAL LED lights?
LIGHT LED lights?
STD LED lights?
FINE LED lights?
EX. FINE LED lights?
PHOTO LED lights?
End
Check the corresponding LED(s) on OPE board.

7.12 Tone Send Test

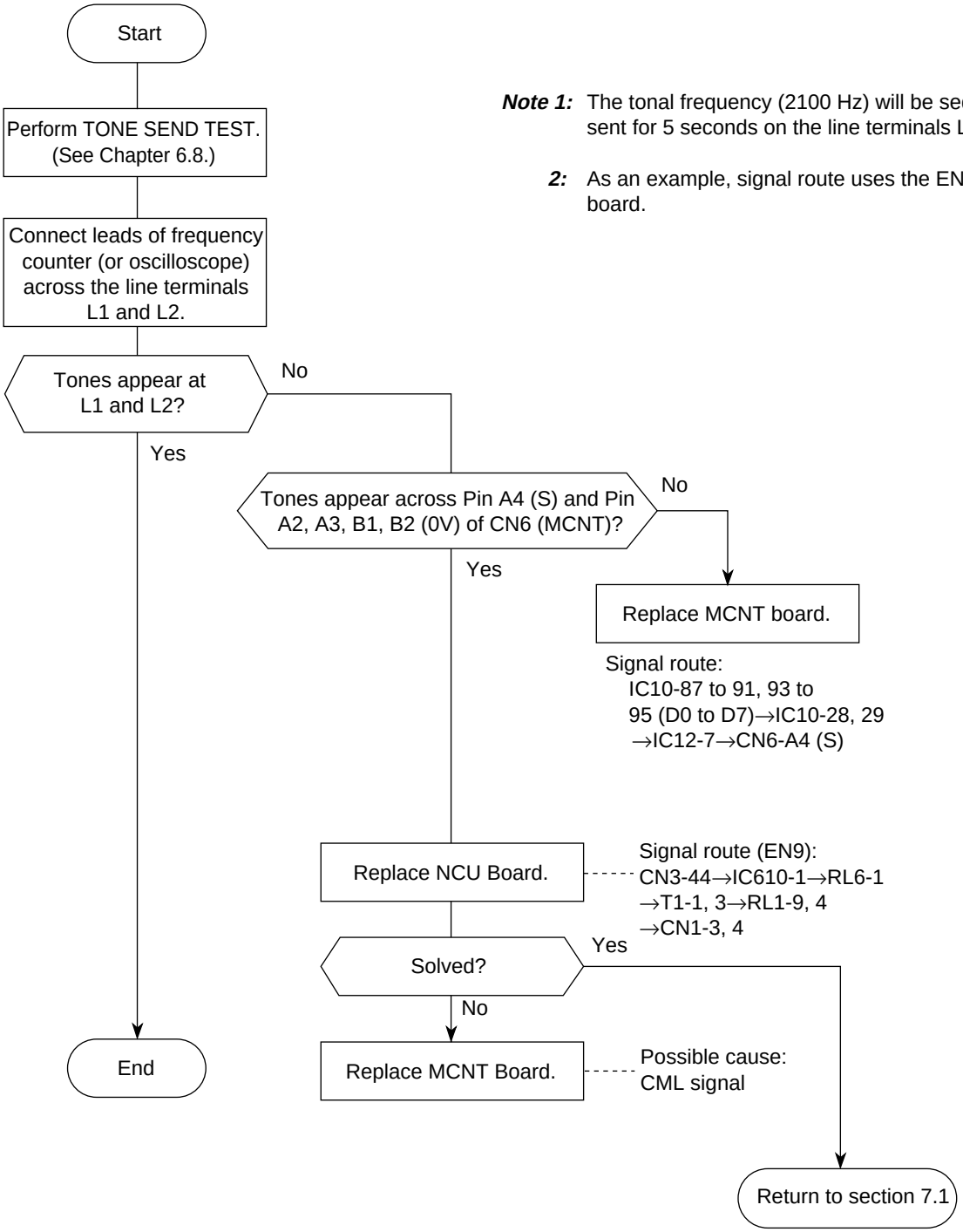

Note 1: The tonal frequency (2100 Hz) will be sequentially sent for 5 seconds on the line terminals L1 and L2.

2: As an example, signal route uses the EN9 (NCU) board.

7.13 High-speed Modem Test

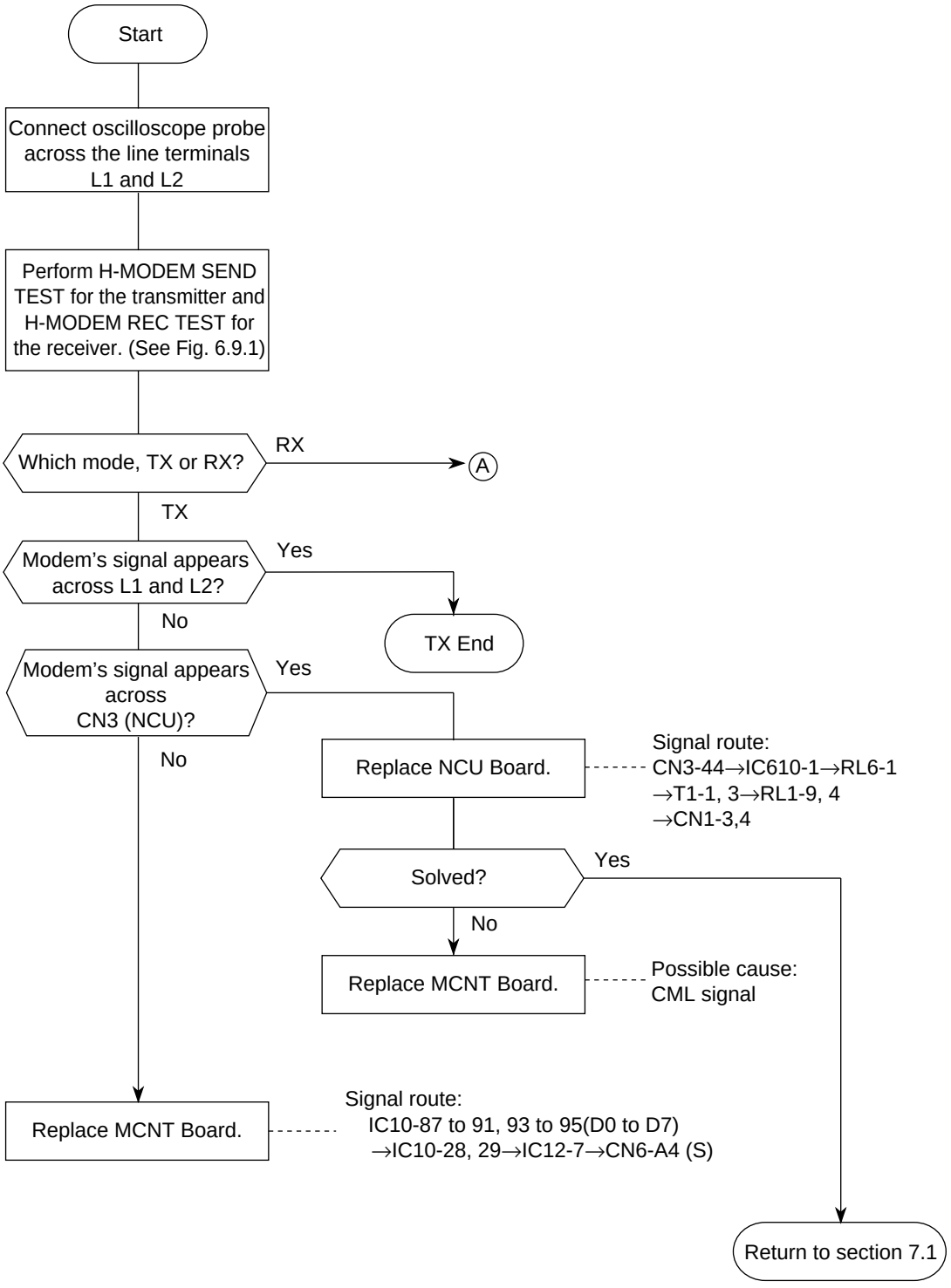

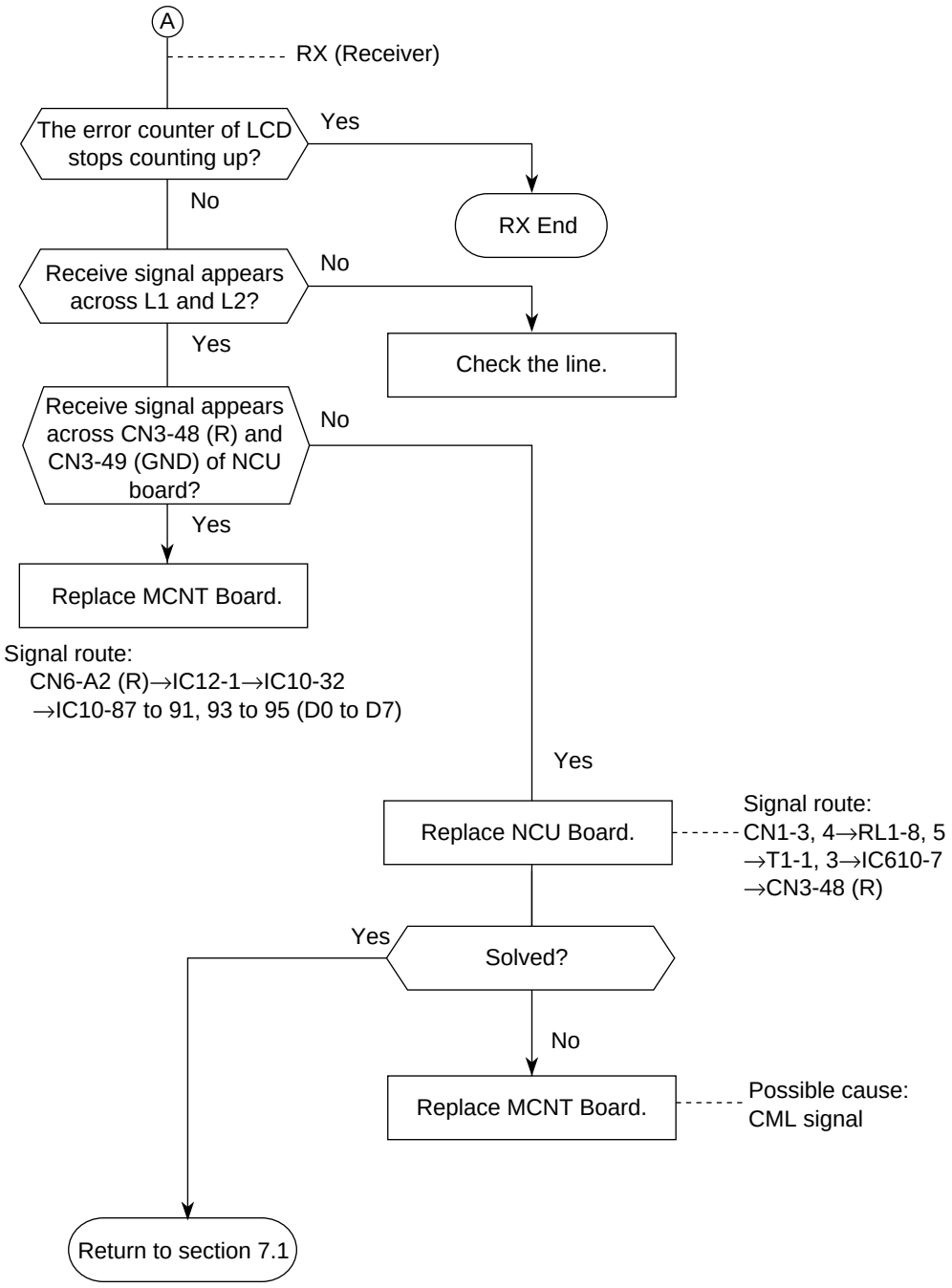
A
RX (Receiver)
The error counter of LCD stops counting up?
Yes
No
RX End
Receive signal appears across L1 and L2?
No
Yes
Check the line.
Receive signal appears across CN3-48 (R) and CN3-49 (GND) of NCU board?
No
Yes
Replace MCNT Board.
Signal route:
CN6-A2 (R)→IC12-1→IC10-32
→IC10-87 to 91, 93 to 95 (D0 to D7)
Yes
Replace NCU Board.
Signal route:
CN1-3, 4→RL1-8, 5
→T1-1, 3→IC610-7
→CN3-48 (R)
Yes
Solved?
No
Replace MCNT Board.
Possible cause:
CML signal
Return to section 7.1

7.14 MF Send Test

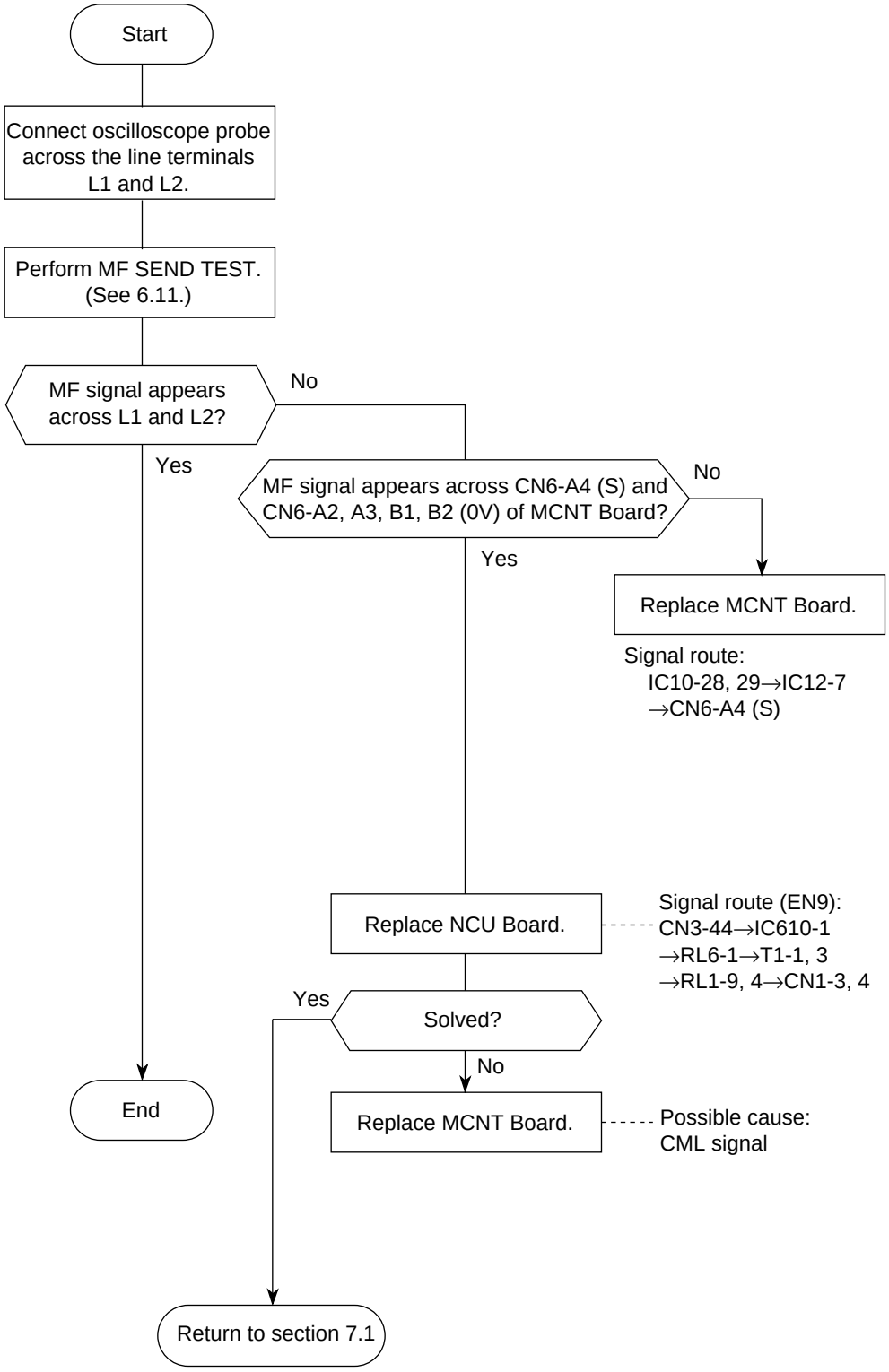

7.15 Tone (TEL/FAX) Send Test

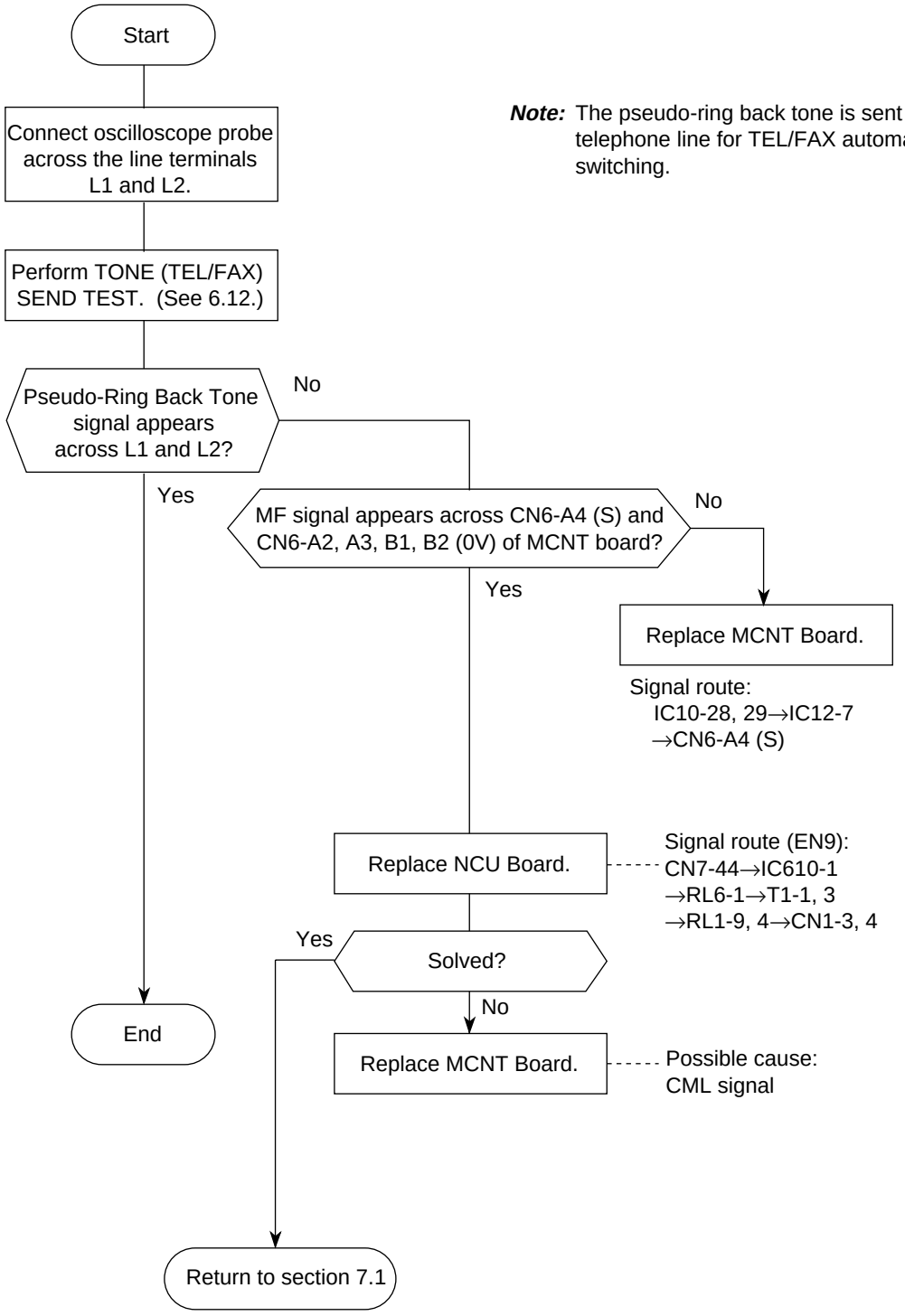

Note: The pseudo-ring back tone is sent to the telephone line for TEL/FAX automatic switching.

7.16 No Acoustic Line Monitor

There are two source routes of acoustic line monitor:

(a) General communication signal
(b) DP pulse signal

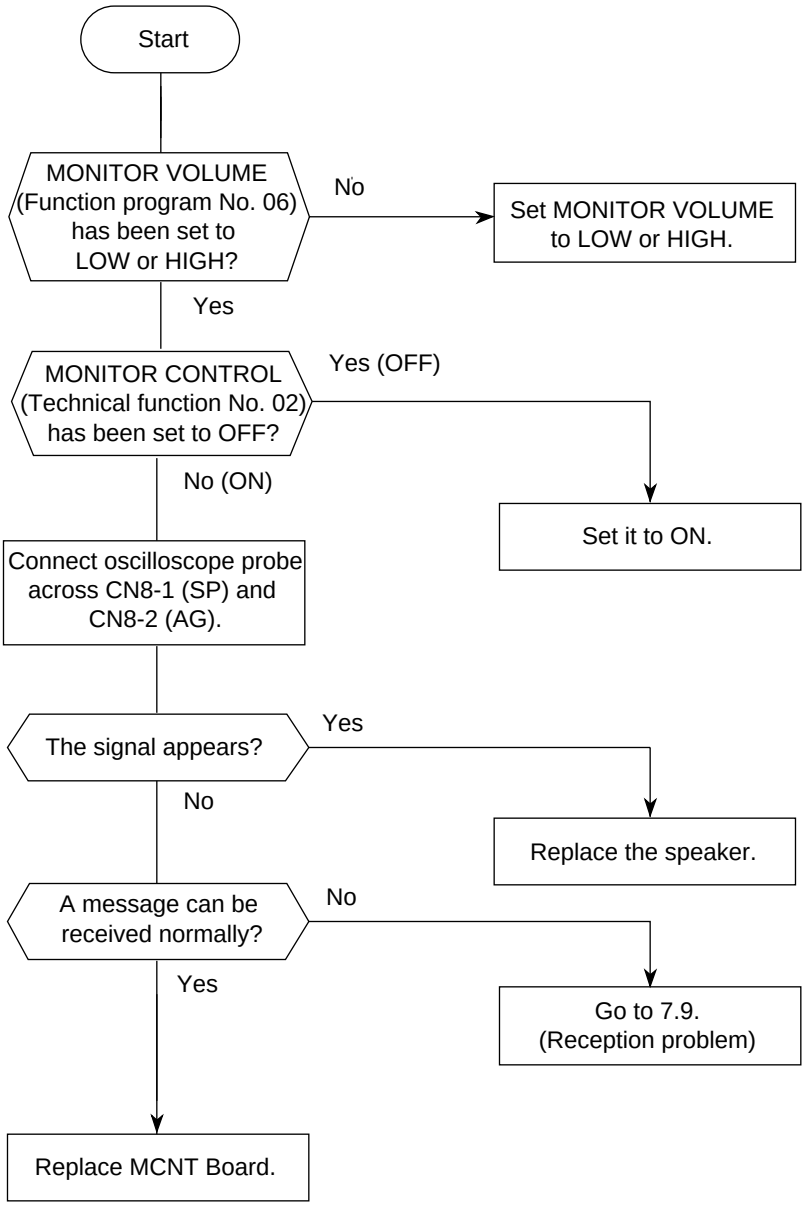

Signal route:
CN6-A2 (R)→IC12-1 (RM)
→TR11-1→IC13-3→IC15-5

7.17 Low Power Supply Unit (LPSU)

Low-voltage Selection

Replace the Power Supply Unit when output voltage written on the item A3 in the Appendix A is not normal.

7.18 High Power Supply Unit (HO8 board)

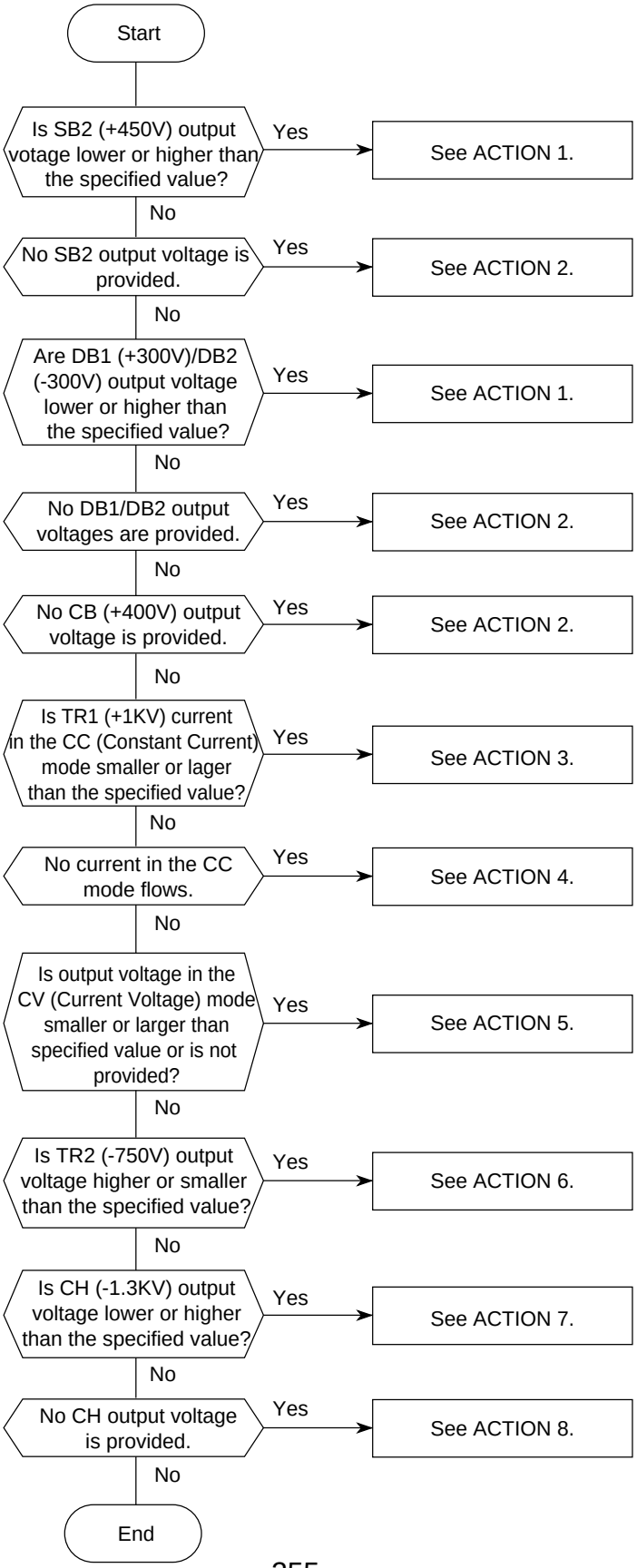

ACTION Item:

No.	ACTION
1	Probable cause 1: D85 is defective. Check item 1: Replace D85. Probable cause 2: The load is larger than the normal value. Check item 2: Check if the load current is 2µA or less. Probable cause 3: D52 is defective. Check item 3: Check if D52 is iZ300 class Y or Z (class X is not acceptable).
2	Probable cause 1: Q11 and Q12 are malfunctioning. Check item 1: Check the PWM waveform of DB output (cycle: 142 µs, ON time: 36µs). Check item 2: Check Q11 and Q12. Check the base voltage of Q21, Q22 and Q23 (3.7V or more to 3.9V or more).
3	Probable cause 1: Current set resistor R115 is defective. Check item 1: Check R115 (tolerance error: +/-1%) Probable cause 2: The reference voltage is incorrect. Check item 2: Check if the voltage at CN3-3 pin is 2.5V. Check item 3: Check the PWM waveform of TR1 (cycle: 142Ms, ON time: 36 µs).
4	Probable cause 1: CC (Constant Current) mode is not set. Check item 1: Check if TR2 PWM is "H". Probable cause 2: T2 is defective. Check item 2: Replace T2. Check T2. Probable cause 3: Check (3) of ACTION 11.
5	Probable cause 1: The voltage memory circuit is malfunctioning. Check item 1: Check if the average value of the VSEN voltage in the CC mode is equal to that in the CV (Current Voltage) mode. Check if the voltage across C301 remains unchanged in the CV mode (for 15 seconds or more).
6	Probable cause 1: D65 or D66 is defective. Check item 1: Check if these diodes are 1ZB390. Check item 2: Check the PWM waveform of TR2 output (cycle: 146µs, ON time: 36µs). Check item 3: Check if TR1 PWM is "L" or TR2 PWM is "H" (if TR1 is "H", TR1 PWM output appears).
7	Probable cause 1: The class of D76 or D82 is incorrect. Check item 1: Check if both D76 and D82 are of EB-2 class. Probable cause 2: The load current is lower than the specified value. Check item 2: The load current shall be 6 to 8µA. (Namely, the load current shall not be more than or less than this limit range.)
8	Check item 1: Check the PWM waveform of CH (cycle: 42µs, ON time: 36µs).

7.19 No Document Feeding

Note: This section places an emphasis on troubleshooting of mechanical portions. Therefore, it is recommended to replace the MCNT Board first and, then if not solved, follow this flow chart.

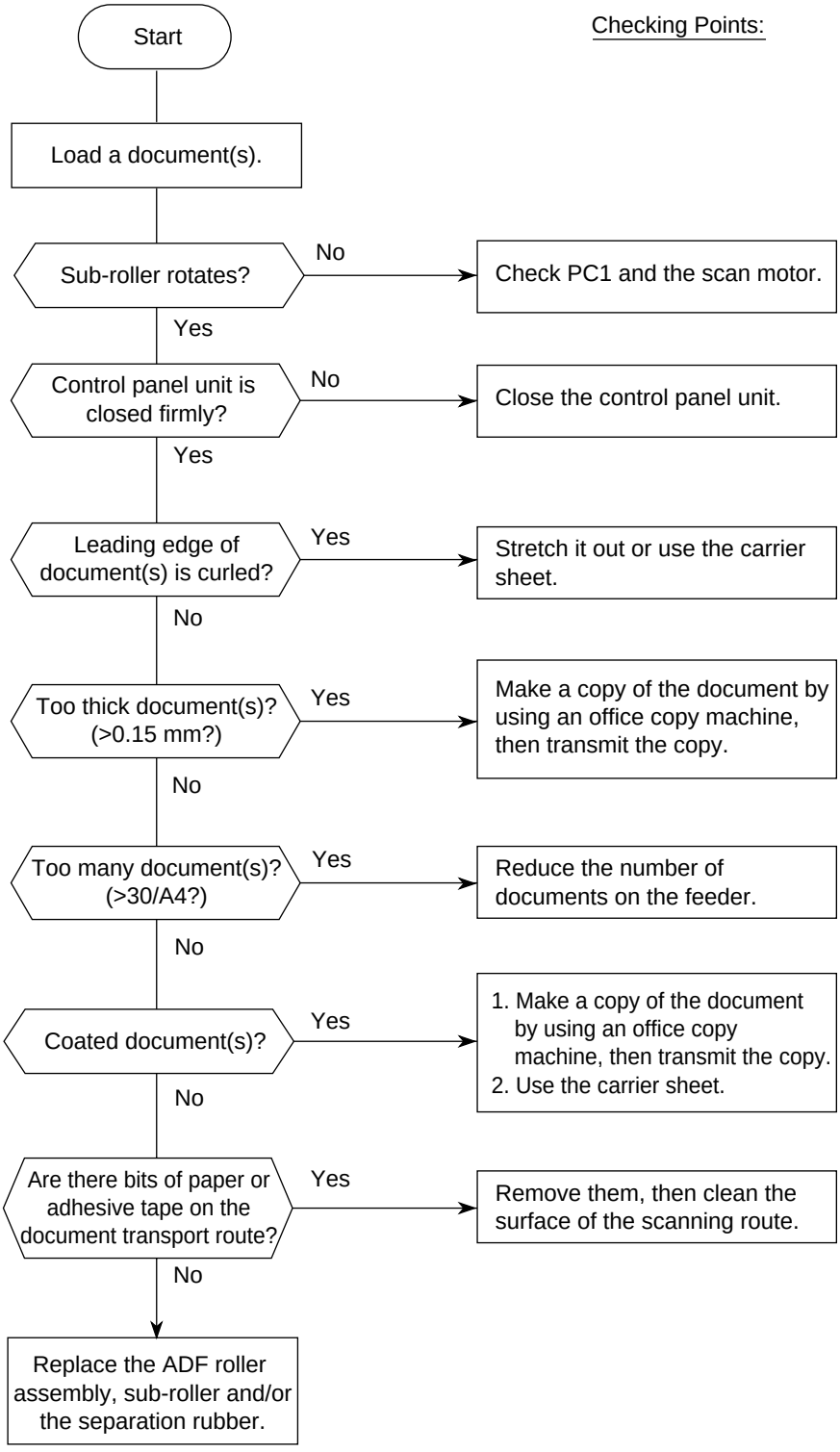

7.20 Multiple Document Feeding

Definition: Multiple document feeding.
Multiple documents are not separated and they are fed in the same one feeding operation.

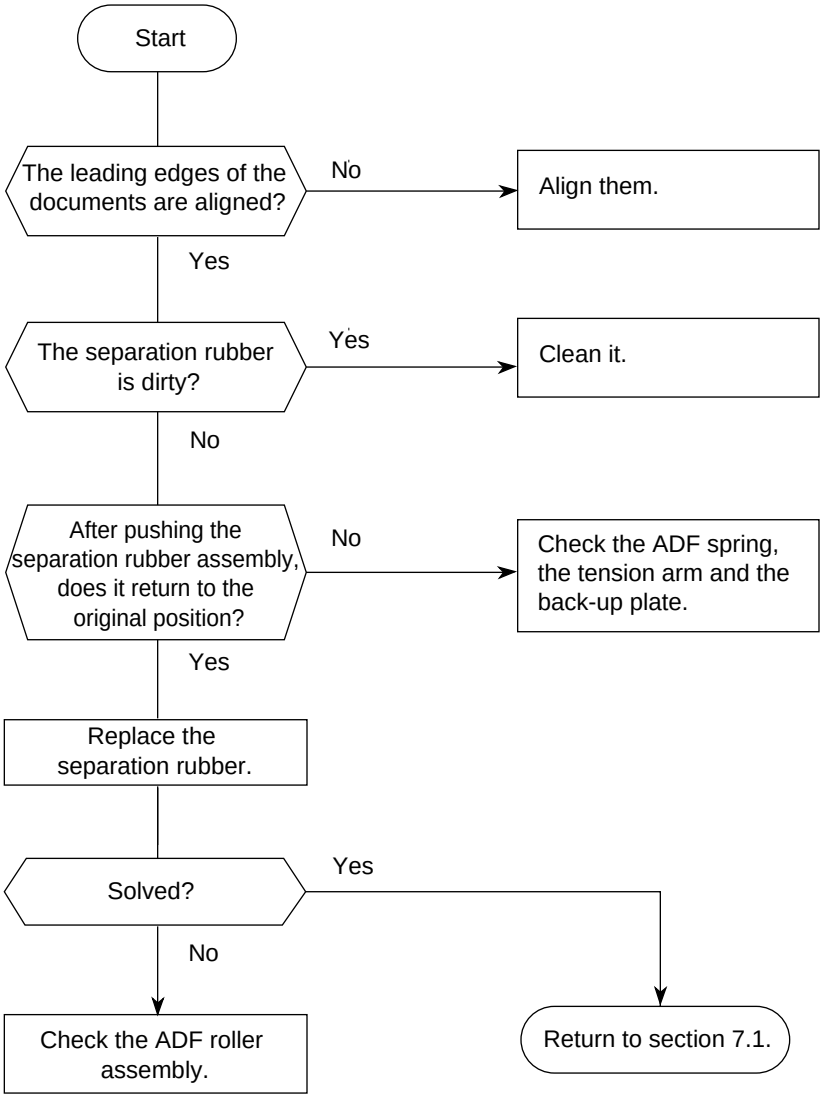

7.21 Document Skew

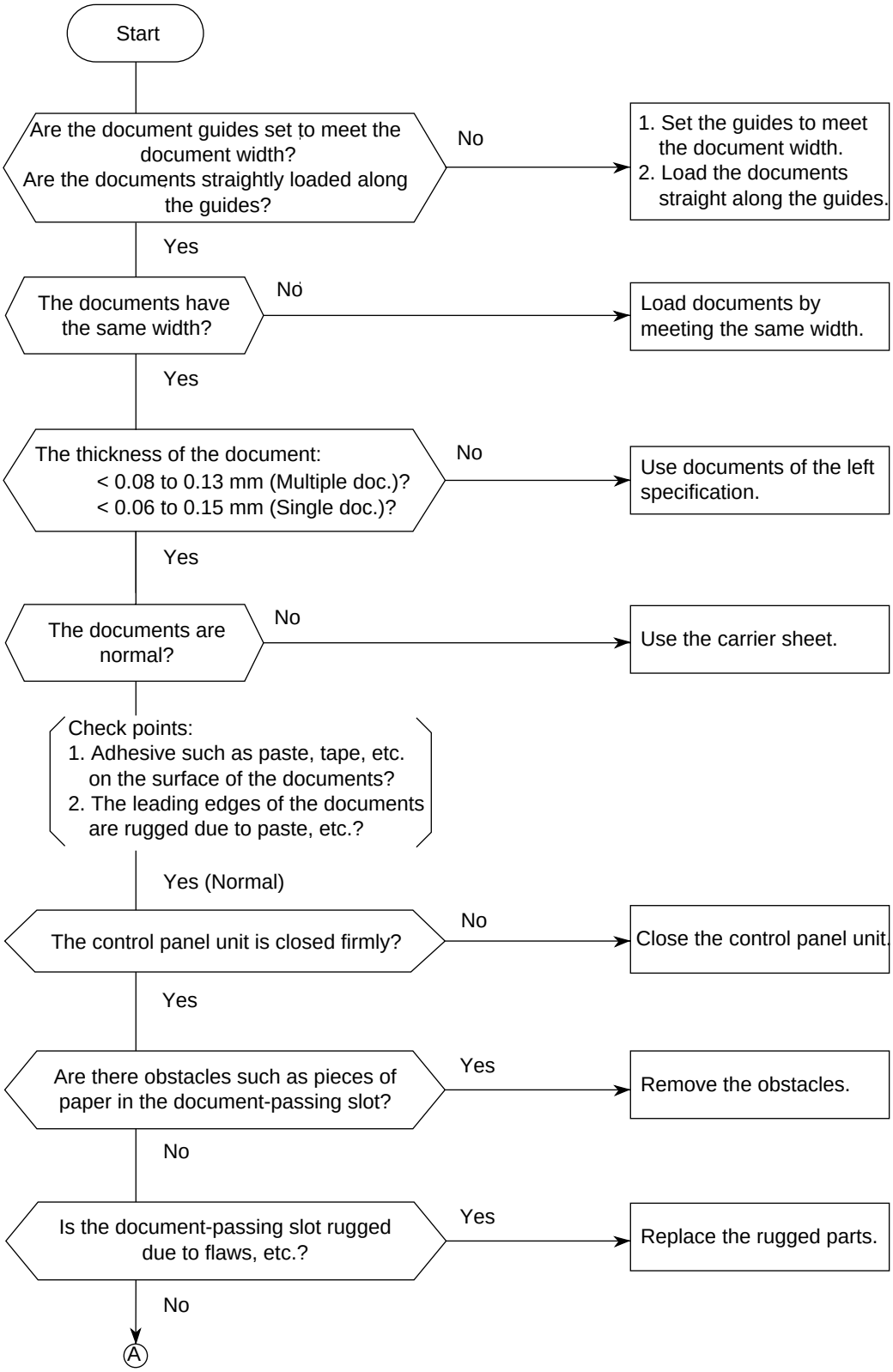

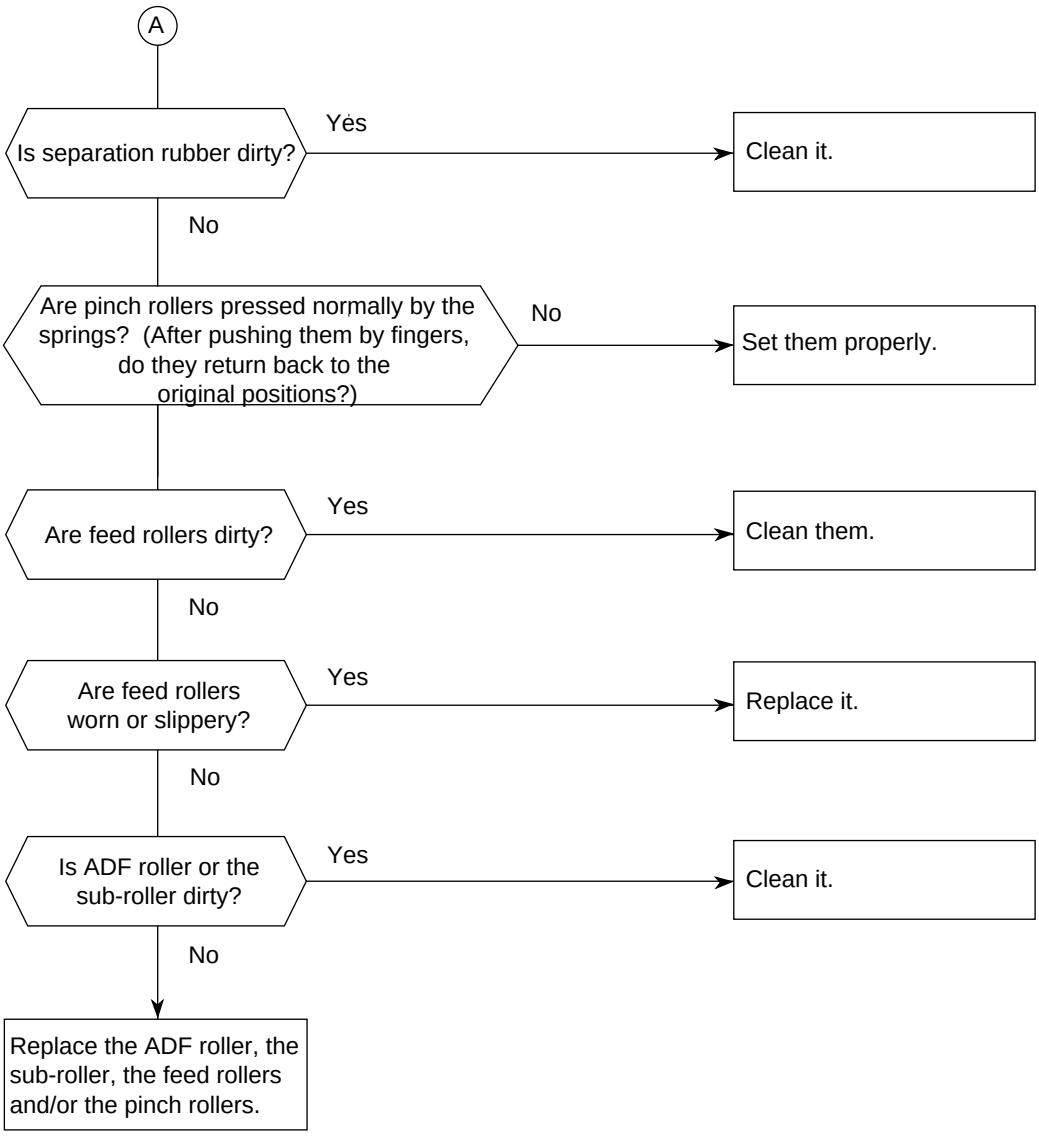
A
Is separation rubber dirty?
Yes
Clean it.
No
Are pinch rollers pressed normally by the springs? (After pushing them by fingers, do they return back to the original positions?)
No
Set them properly.
Are feed rollers dirty?
Yes
Clean them.
No
Are feed rollers worn or slippery?
Yes
Replace it.
No
Is ADF roller or the sub-roller dirty?
Yes
Clean it.
No
Replace the ADF roller, the sub-roller, the feed rollers and/or the pinch rollers.

7.22 Document Jam

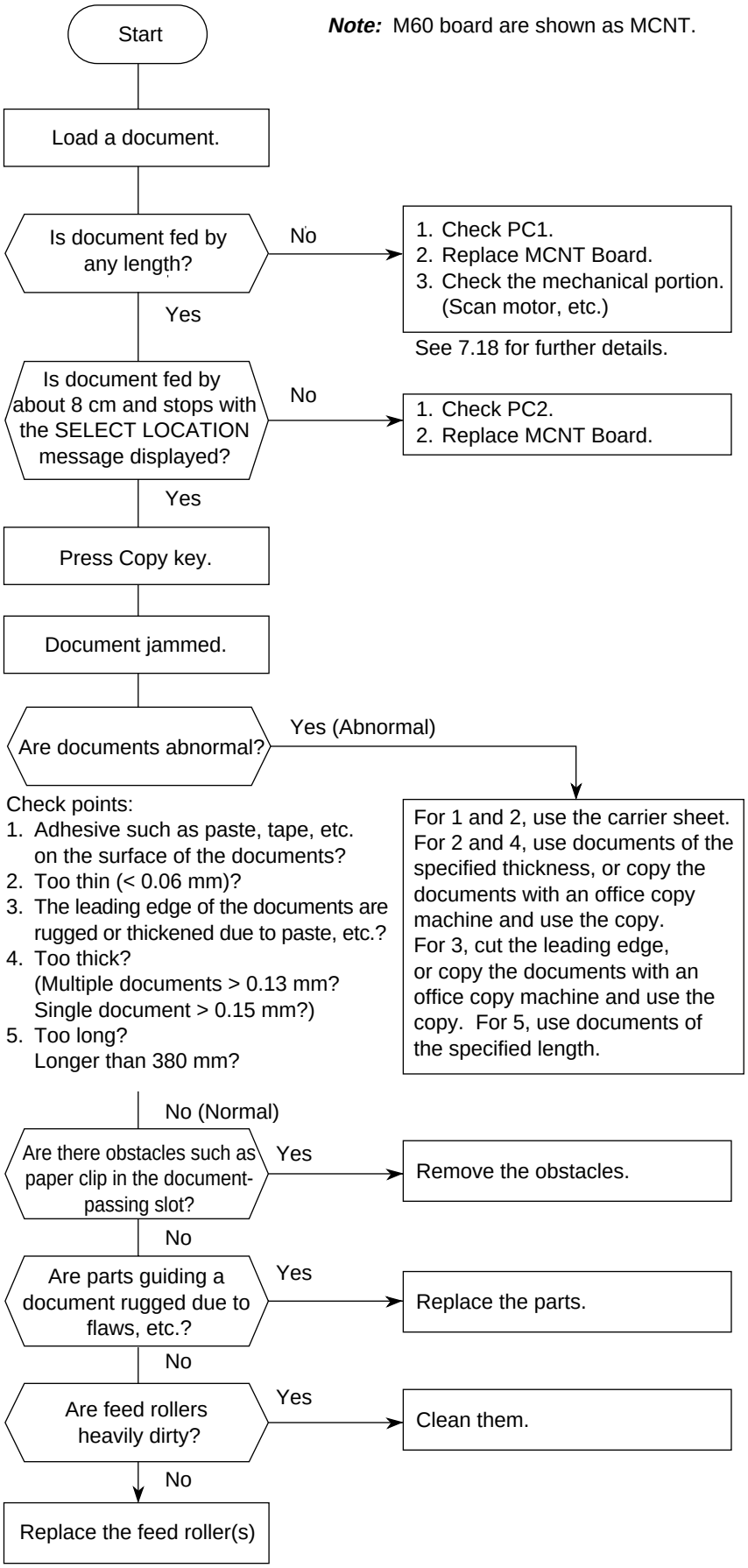

7.23 Printer Unit

7.23.1 Precautions

1. Points to check before correcting image troubles
   (1) Is the printer being run in proper ambient conditions?
   (2) Have the supplies (toner) and the routine replacement part (ID unit) been replaced properly?
   (3) Is the recording paper normal?
   (4) Has the ID unit been loaded properly?

2. Tips for correcting image troubles
   (1) Do not touch, or bring foreign matter into contact with the surface of the drum.
   (2) Do not expose the drum to direct sunlight.
   (3) Keep hands off the fuser unit as it is heated during operation.
   (4) Do not expose the drum to light for longer than 5 minutes at room temperature.

7.23.2 Troubleshooting Flow Charts of Printer Unit

Overall troubleshooting flow chart:

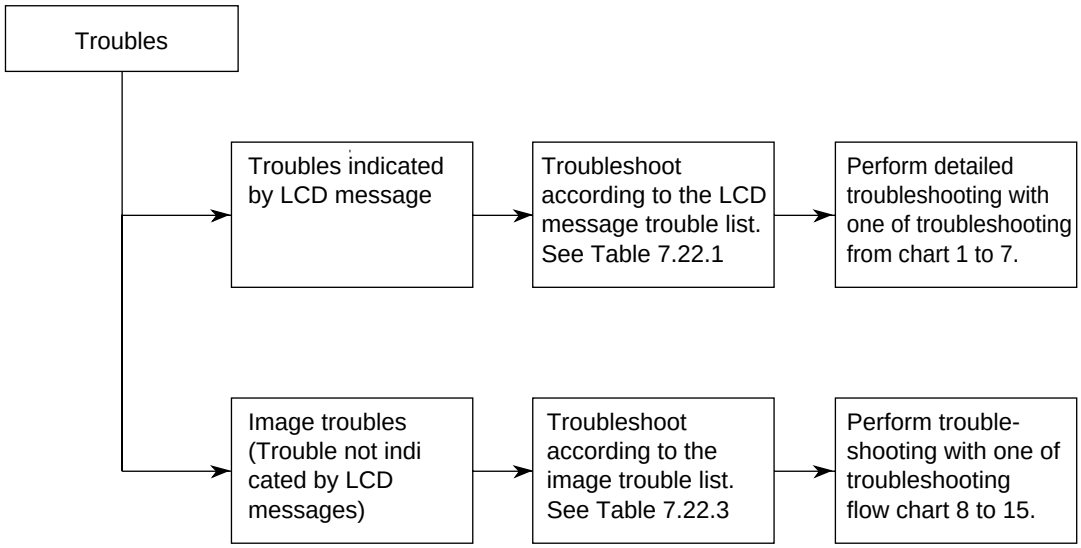

Table 7.1 LCD Message Trouble List

Category	LCD message display	Trouble	Troubleshooting flow chart number
Cover open	14:14 [FAX] COVER OPEN	The cover (copy stacker) is open.	1
Image drum alarm	14:14 [FAX] CHANGE DRUM	Warning message to replace ID unit because of its life.	2
Engine errors	PRINTER ALARM 2[TEL] PLEASE CONFIRM	Engine controller error (Option: 2nd tray)	3
	PRINTER ALARM 3[TEL] PLEASE CONFIRM	Fan motor rotation error	4
	PRINTER ALARM 4[TEL] PLEASE CONFIRM	Fuser unit thermal error	5
Recording paper/ jam error	PAPER JAM [FAX] CONFIRM AND "STOP"	Recording paper feed jam, transport jam, ejection jam, recording size error	6
Paper cassette request	NO PAPER [FAX] REPLACE PAPER	No recording paper cassette or no recording paper	7
Daily status	TONER LOW [FAX] REPLACE TONER CART.	Toner is running short. ***Note:*** No toner memory RX is ON.	
	14:14 [FAX] REPLACE TONER CART.	Toner is running short. ***Note:*** No toner memory RX is OFF.	

Troubleshooting flow chart 1:

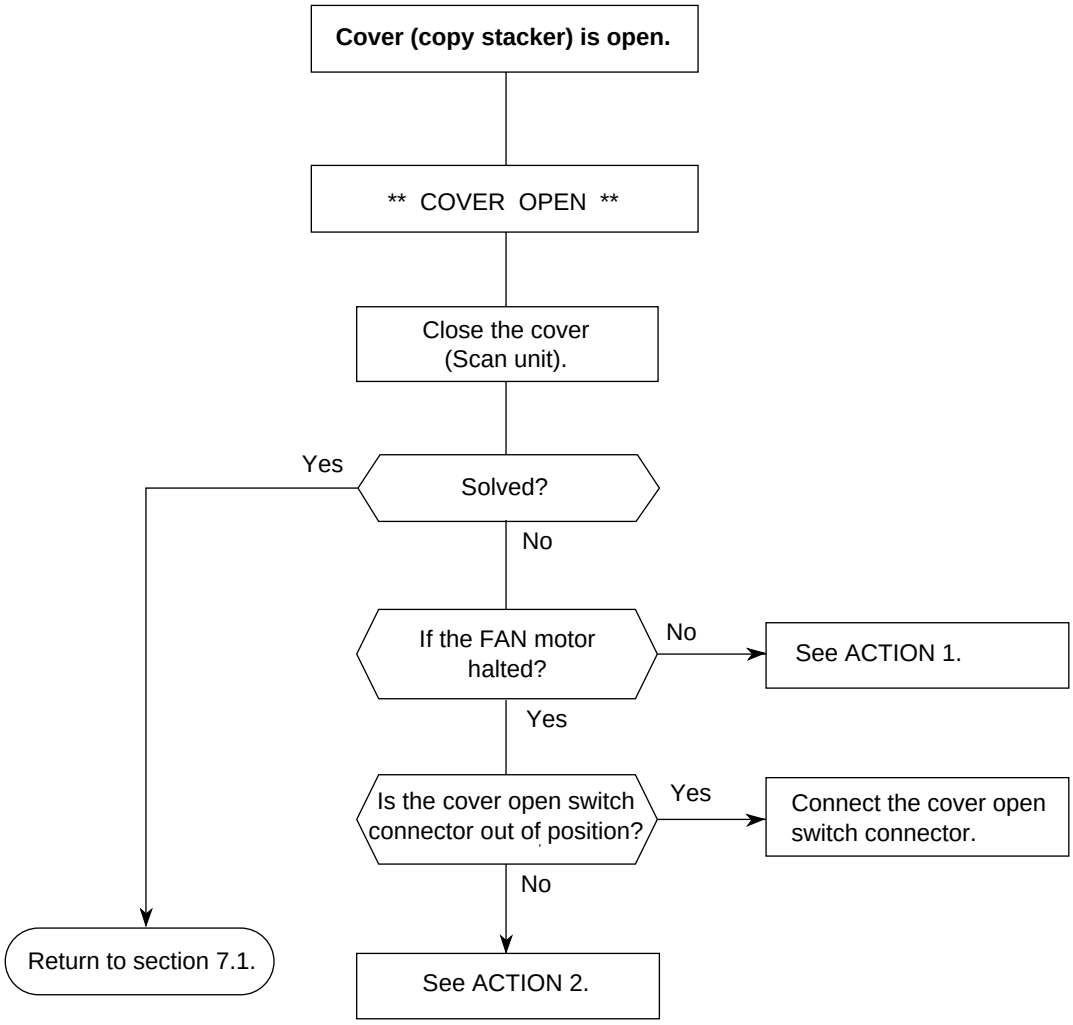

Troubleshooting flow chart 2:

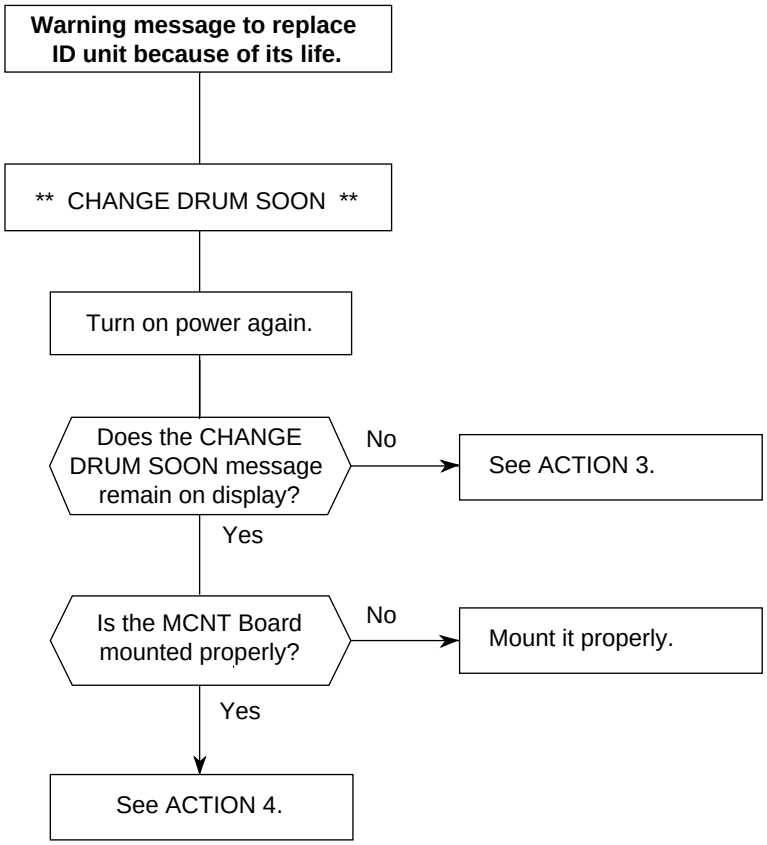

Troubleshooting flow chart 3:

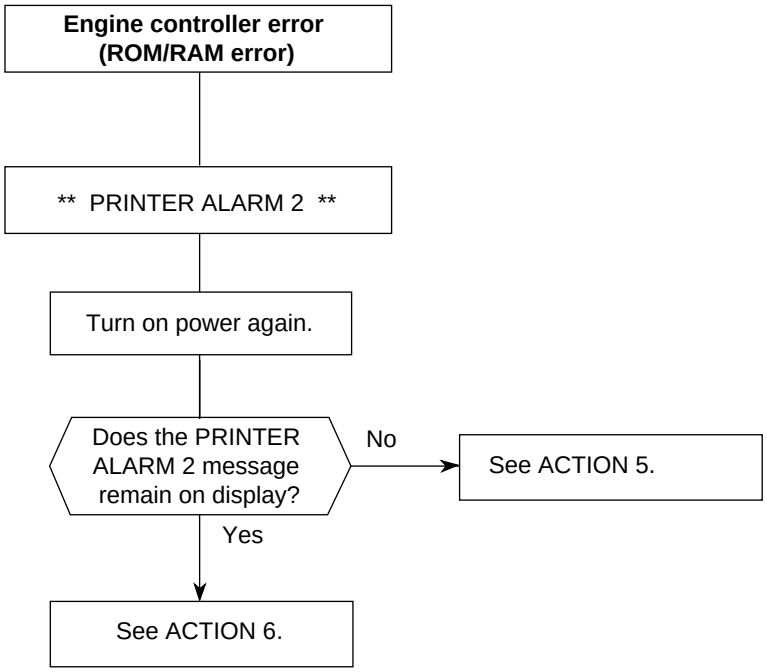

Troubleshooting flow chart 4:

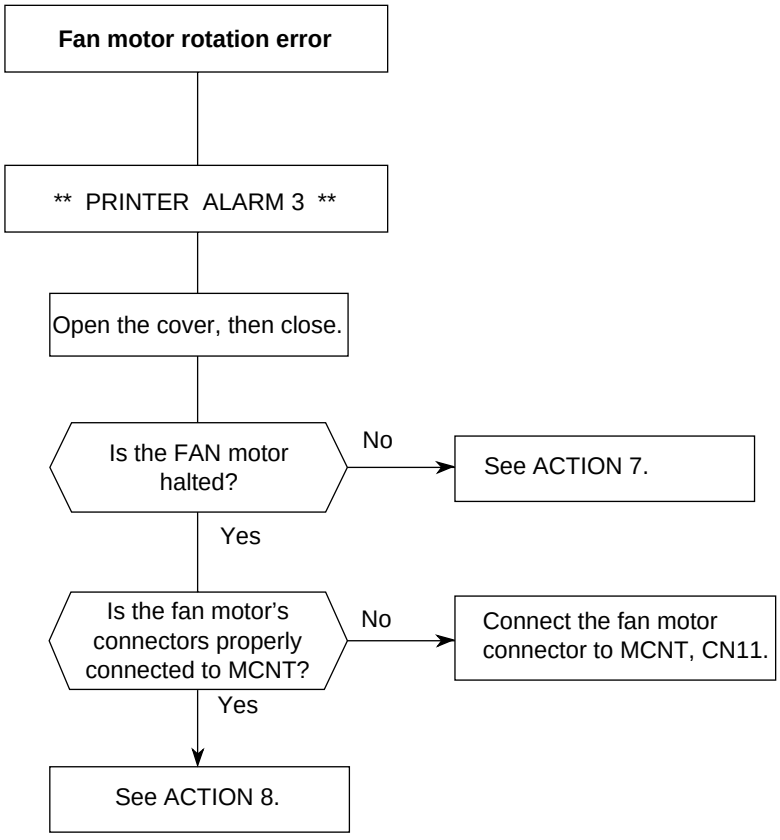

Troubleshooting flow chart 5:

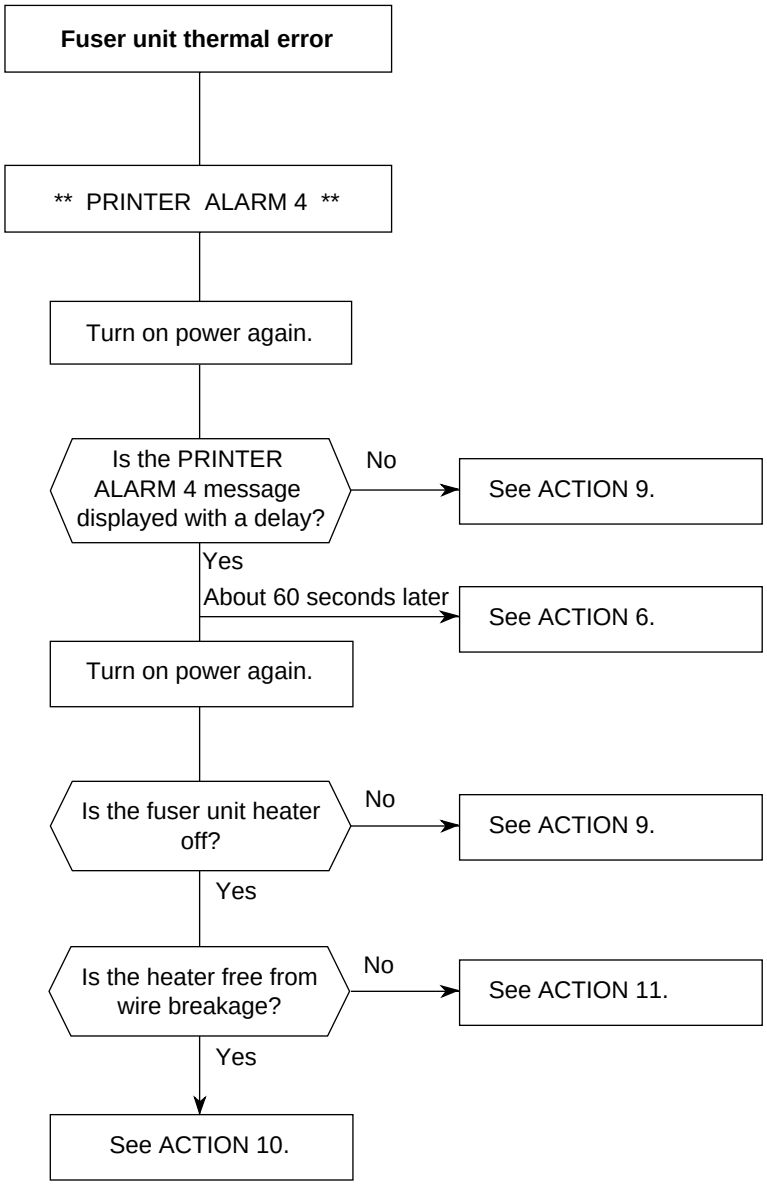

Troubleshooting flow chart 6:

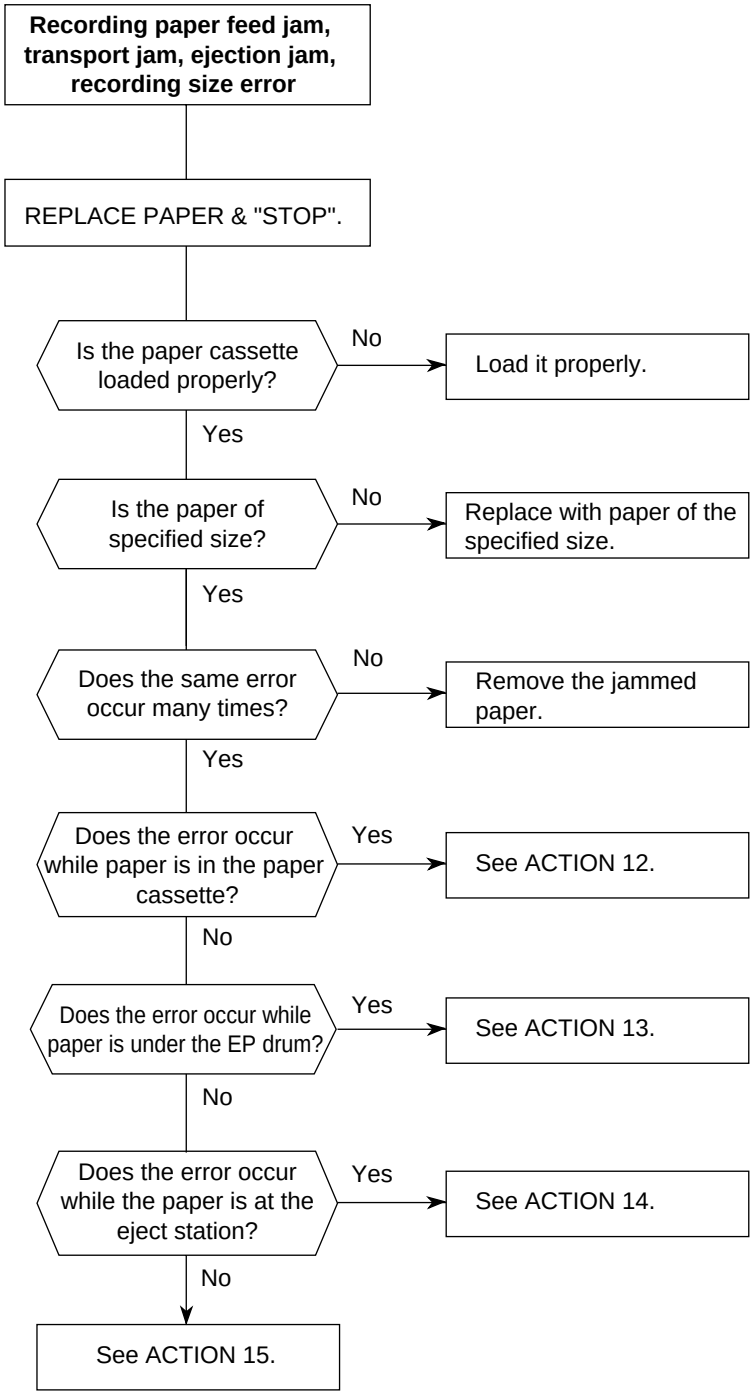

Troubleshooting flow chart 7:

No recording paper cassette or not recording paper

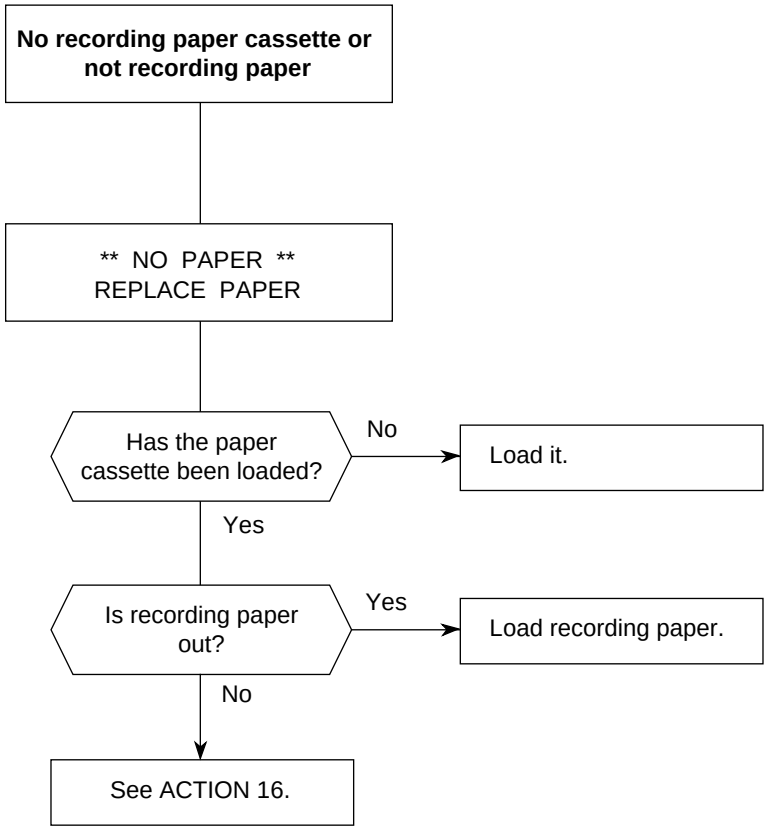

Table 7.2 Action Items (Printer Unit-LCD Message)

No.	ACTION	No.	ACTION
1	Check MCNT Board.	9	Check thermister (resistance of about 100 kilo ohms at room temperature and about 1.5 kilo ohms at high temperature), High POWER SUPPLY UNIT.
2	Check High POWER SUPPLY UNIT. cover open switch, cover open switch connection. Check MCNT Board.	10	Check connection between the High Power Supply Unit and the fuser assembly, heater, thermostat.
3	Return to Section 7.2.	11	Check High Power Supply Unit.
4	Replace the ID Unit. And clear Drum Count, Selection 6.3.	12	Check inlet sensor lever, hopping roller, resist motor, MCNT Board, cover setting state.
5	Check installation of MCNT board, High POWER SUPPLY UNIT board.	13	Check cover setting state, drum motor, drum motor gear, MCNT Board.
6	Check MCNT Board.	14	Check exit sensor lever, cover setting state, High Power Supply Unit
7	Check FAN motor, MCNT Board.	15	Check MCNT Board,.
8	Check FAN motor, MCNT Board, High POWER SUPPLY UNIT.	16	Check paper sensor lever, High Power Supply Unit, MCNT board.

Note: M60 are shown as MCNT.

Table 7.3 Image Troubles

Abnormal Symptom	Reference Figure	Troubleshooting Flow Chart No.
Images are light or blurred as a whole.	Fig. Ⓐ	8
The blank background is smeared.	Fig. Ⓑ	9
Blank paper is output.	Fig. Ⓒ	10
Black belts or black stripes in vertical direction.	Fig. Ⓓ	11
Periodic abnormal printing.	Fig. Ⓔ	12
Some parts not printed.	—	13
White belts or some white stripes in vertical direction	Fig. Ⓕ	14
Poor fusing (Images are blurred or peeled off when touched by hands)	—	15

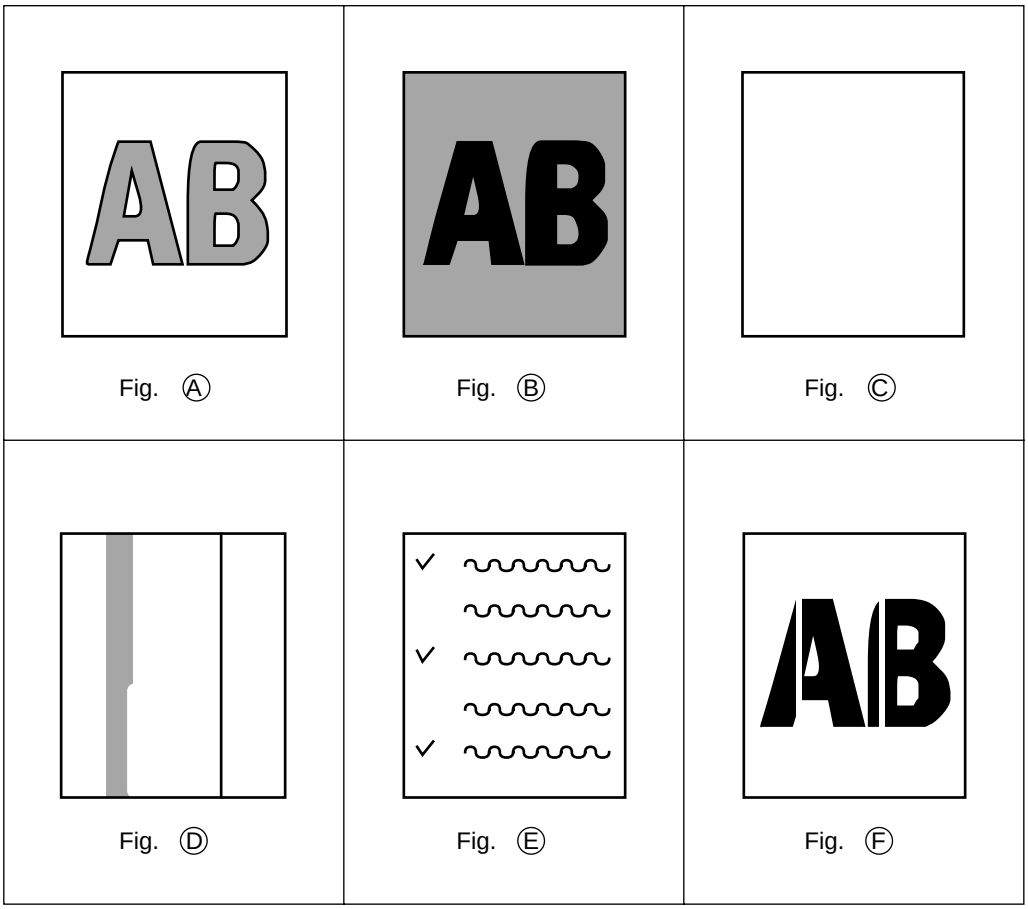

Figure 7.1 Abnormal Symptoms of Image Troubles (Example)

Troubleshooting flow chart 8:

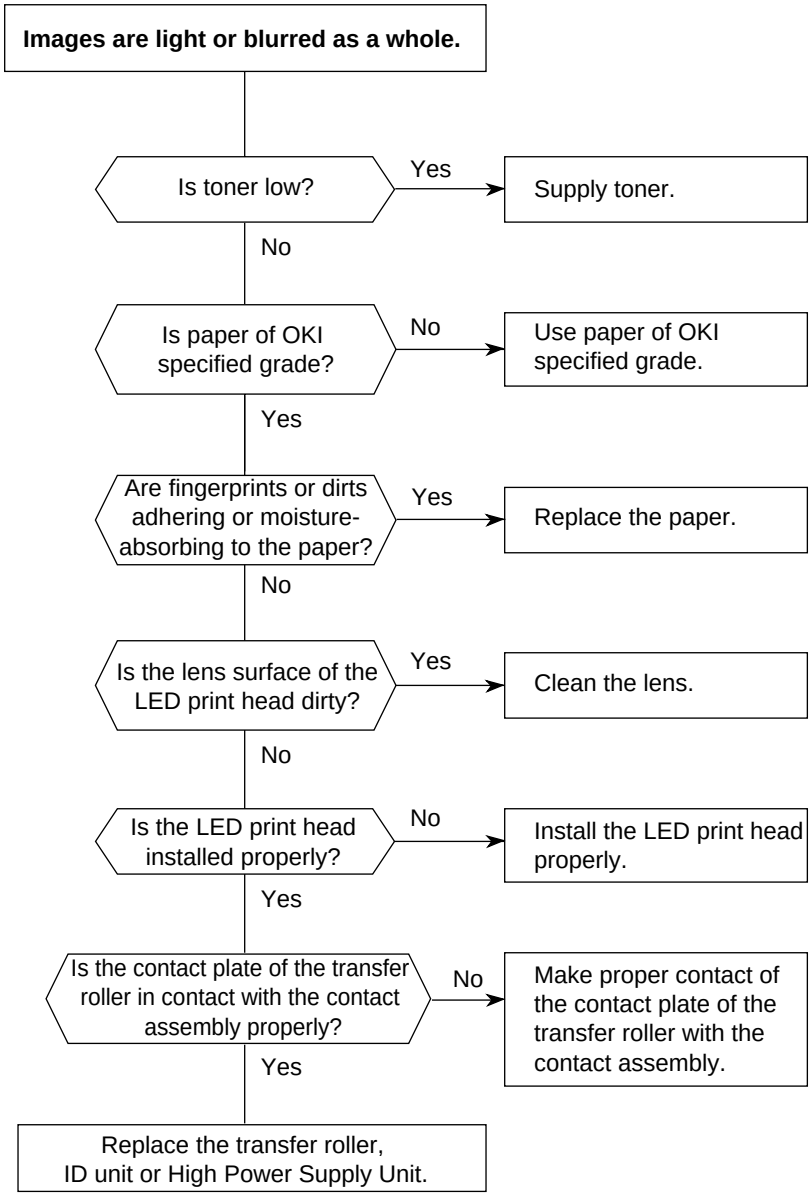

Troubleshooting flow chart 9:

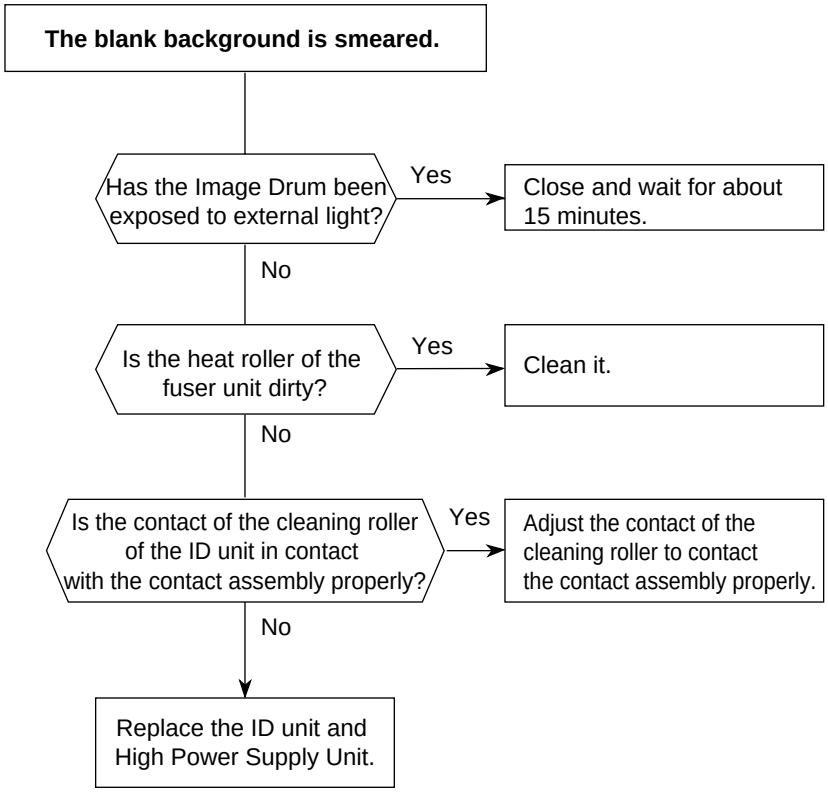

Troubleshooting flow chart 10:

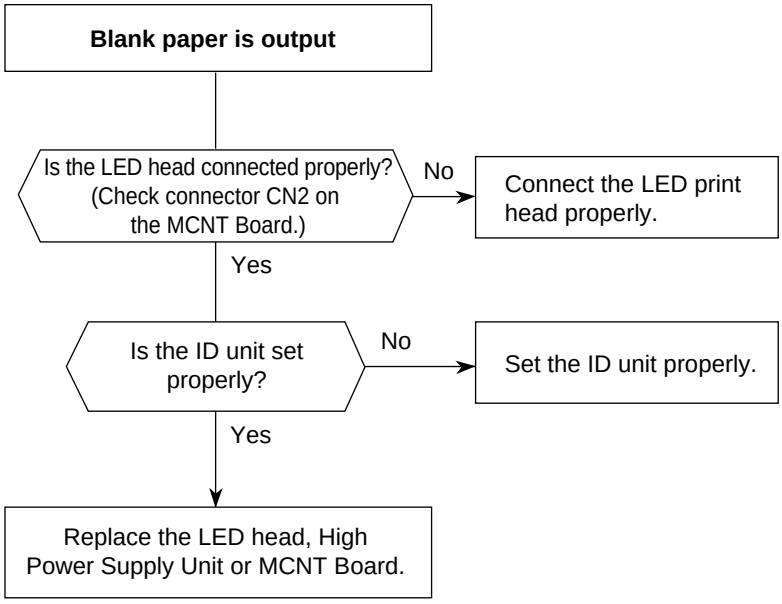

Troubleshooting flow chart 11:

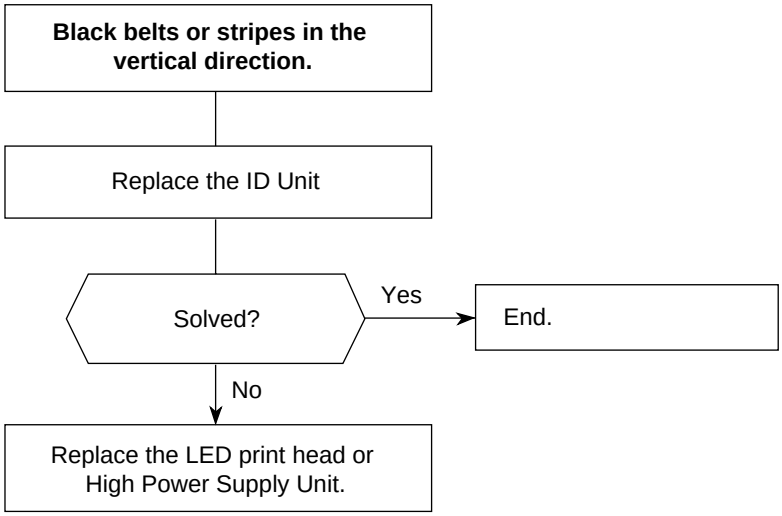

Troubleshooting flow chart 12:

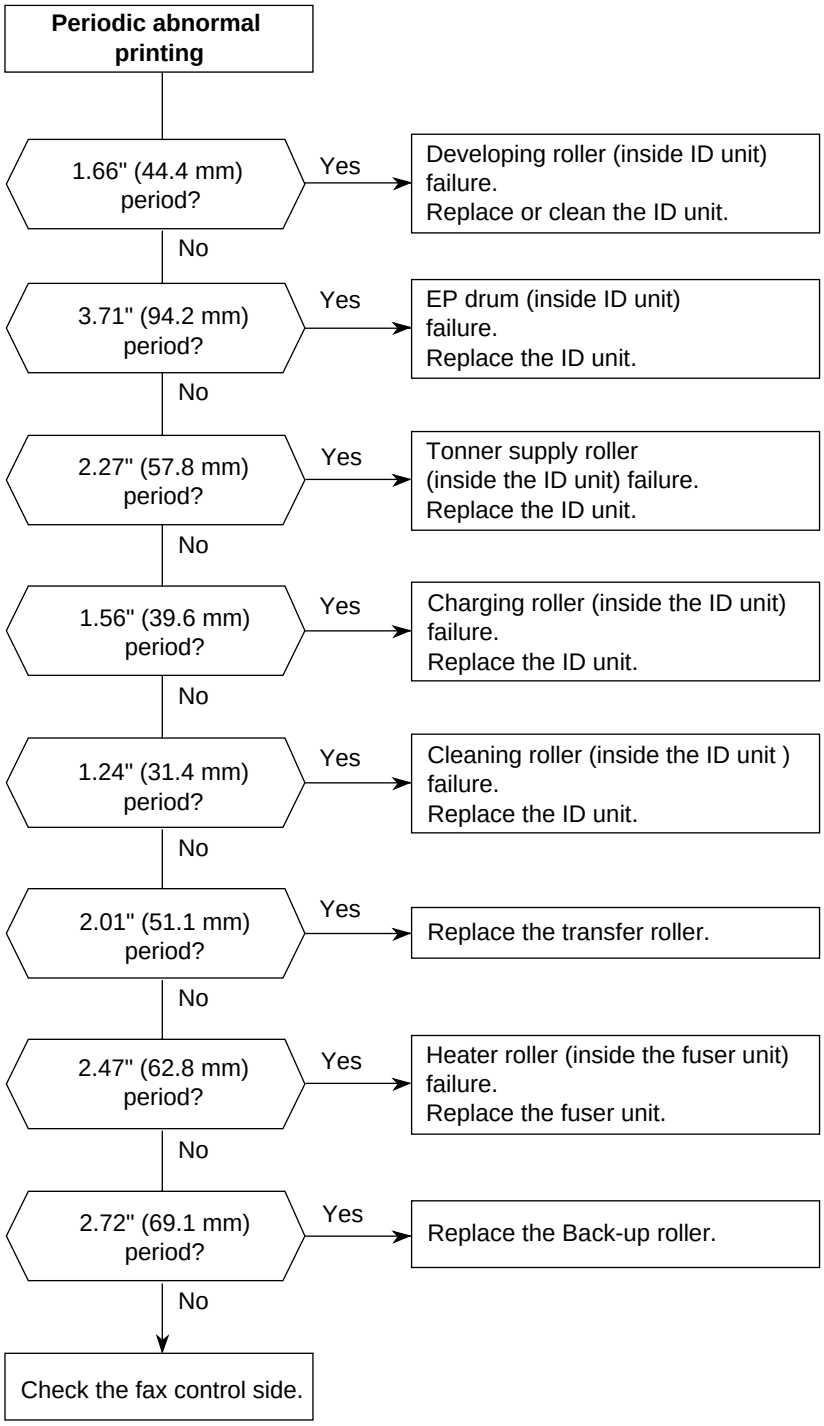

Troubleshooting flow chart 13:

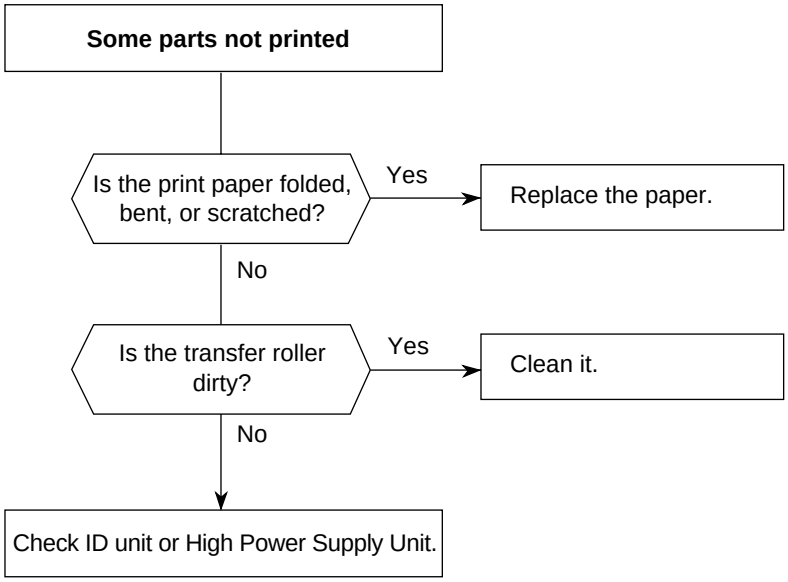

Troubleshooting flow chart 14:

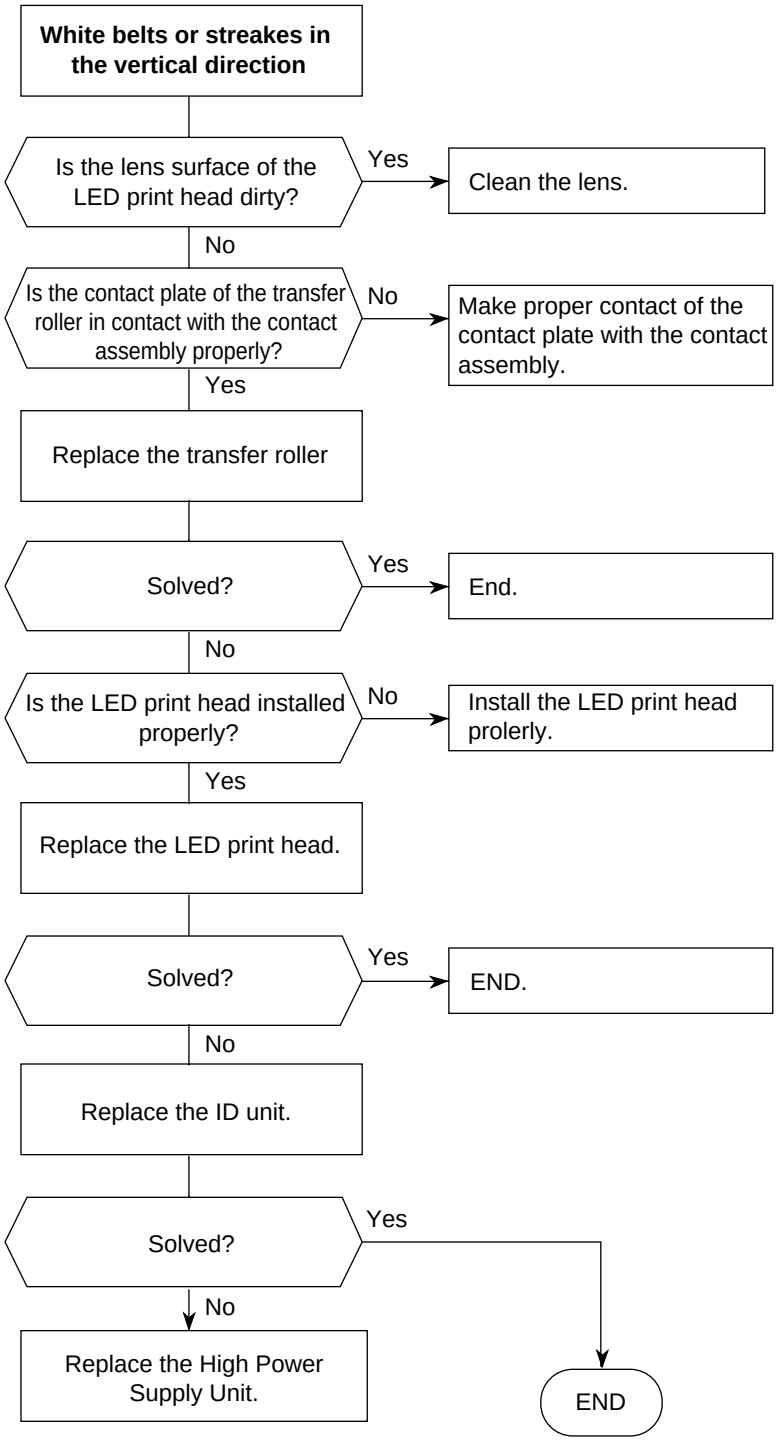

Troubleshooting flow chart 15:

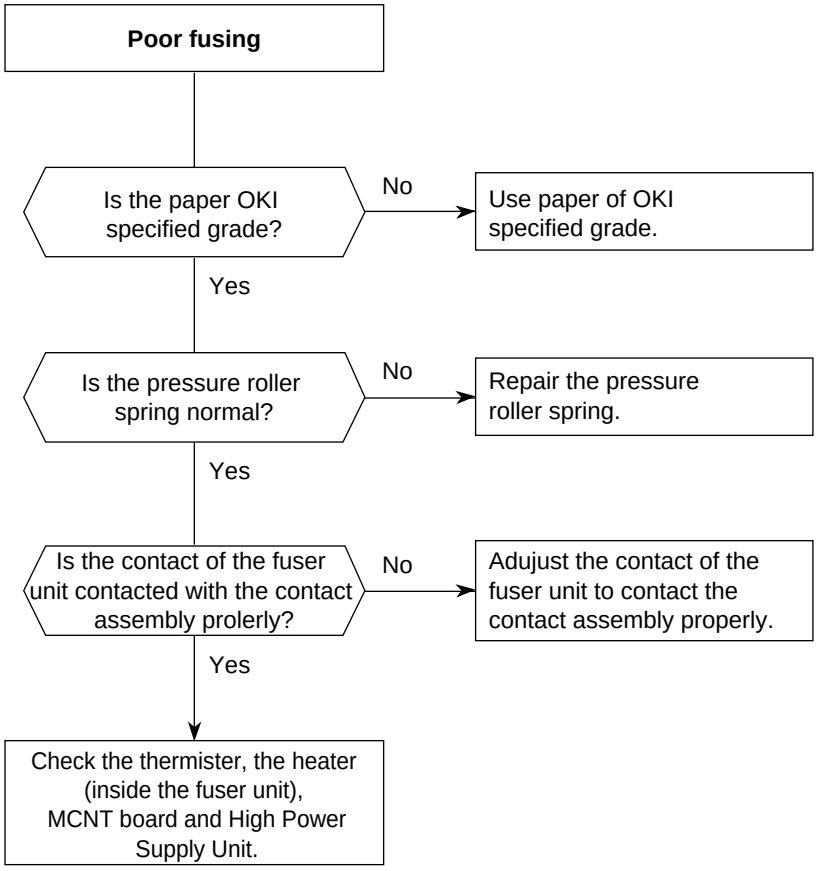

APPENDIX A PC BOARD DESCRIPTION AND OPERATION

PREFACE

This manual has been designaed to provide basic information concerning the electric section for the component-level maintenance of the OKIFAX 5650 series facsimile transceiver. It includes such information which will help maintenance personnel to understand the circuit operations.

This manual will also provide the reader information concerning the functions of units and the relationships among the units which will assist you in conducting unit-level maintenance.

Detailed circuit diagram has been omitted from this manual to avoid duplications of contents with other associated manuals, For information not contained in this manual, refer to:

OKIFAX 5650 SERIES CIRCUIT DIAGRAM/PARTS LIST (Appendix C)

DANGER

Do Not
Touch !

HIGH VOLTAGE

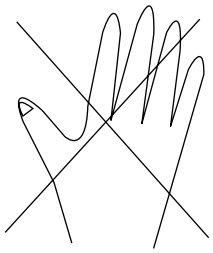

You may be subjected to high-voltage electric shock by touching the following parts without an insulating material:

a. High-voltage unit

b. Contact ass'y

© Copyright 2000 OKI DATA CORPORATION
This manual is subject to alteration without prior notification.

1. Unit Configuration and Block Diagram

The unit configuration of the OKIFAX 5650 is as follows:

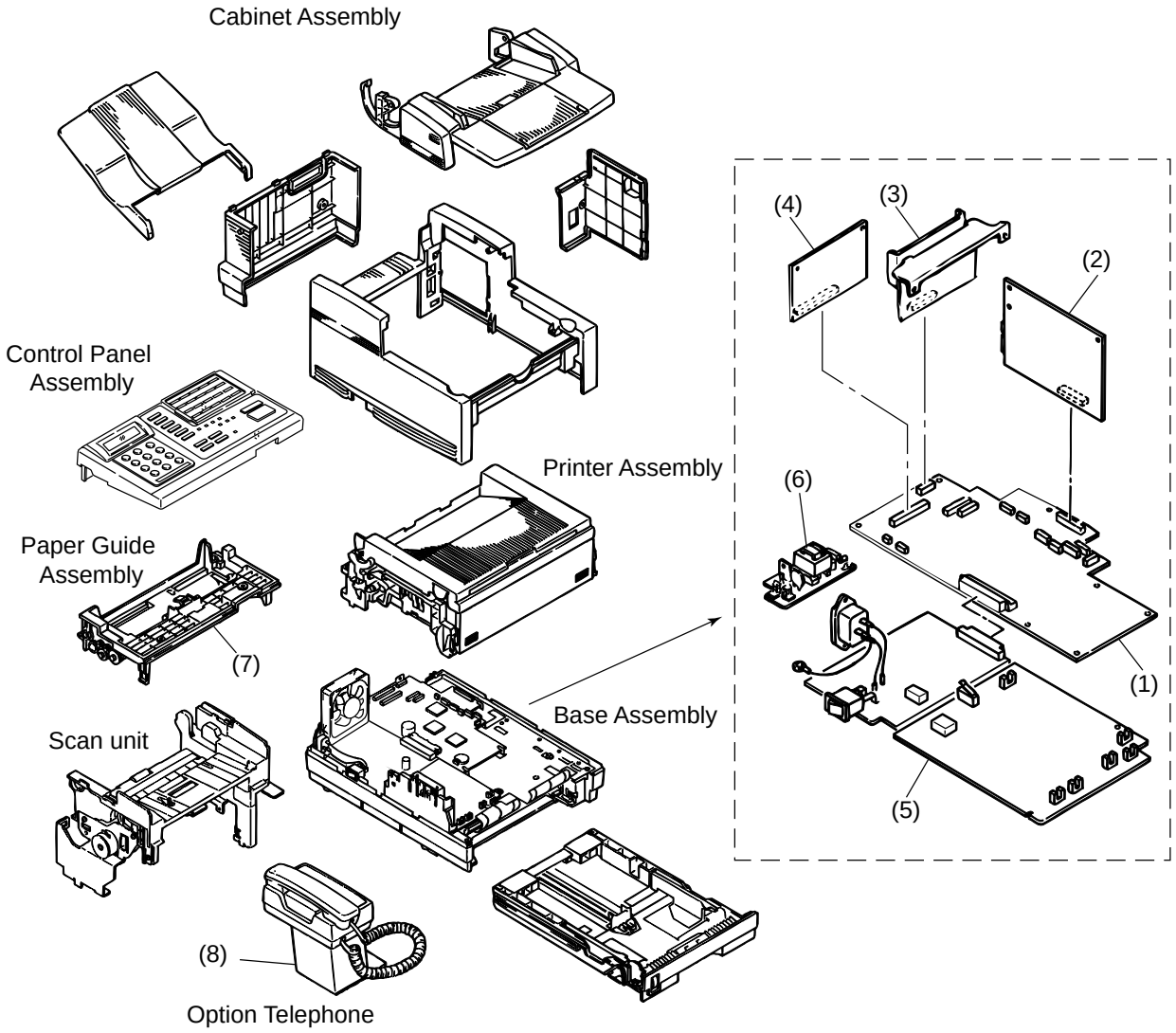

Figure 1.1 Unit Configuration

(1) Main control board (M60-)
(2) Network control unit (NCU)
(3) PC interface board (CTT): option
(4) Memory board (MEM): option
(5) Power supply unit (120V, 230V)
(6) High power supply unit (H08)
(7) Operation panel board (P60)
(8) Optional board
- Telephone interface board (TEL)
- NCU-TEL interface board (NTIF)
- Ten-key board (10KY)
- Hook board (HOOK)

2. Function of Each Unit

The section describes the principal functions of the individual units of the OKIFAX 5650 electrical sections.
Figure 2.1 shows the pertinent block diagram.

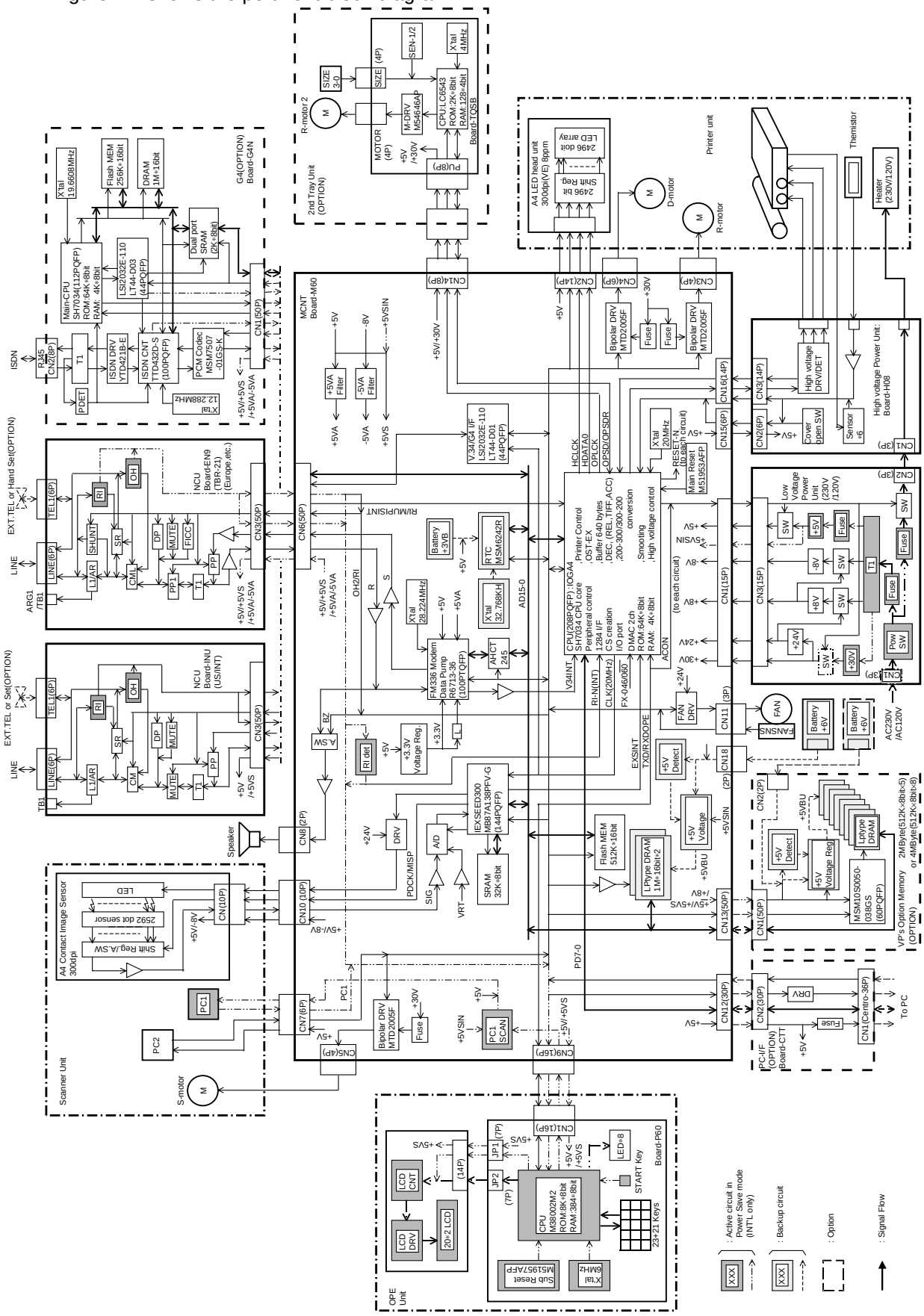

Figure 2.1 OKIFAX 5650 Block Diagram

Meaning of abbreviations used in Block Diagram

A/D :	Analog-to-digital converter
AMP :	Amplifier
CNi :	Connector number i
CPU :	Central processing unit
D-MOTOR :	Drum motor
DRV :	Motor drive
DRAM :	Dynamic random-access memory
IEXSEED300 :	Image proccessing gate array
FAN :	Fan motor
FLASH :	Flash memory
IOGA 4 :	Input output gate array
PCi :	Photocoupler number i
R-MOTOR :	Resist motor
RTC :	Real time clock
S-MOTOR :	Send motor
SRAM :	Static random-access memory
X'tal :	Crystal oscillator

(1) M60 board
- CPU (208P-QFP)
  Printer control
  OST-EX
  Buffer 640 kbytes
  DEC,(REL, TIFF, ACC)
  200-300/300-200 conversion
  Smoothing
  High-voltage control
  SH7034 CPU core
  Peripheral input/output control
  1284 I/F
  CS
  I/O port
  DMAC 2ch
  ROM: 64k ∞ 8bit
  RAM: 4k ∞ 8bit
- IEXSEED 300
  Image data processing
- SRAM (32 ∞ 8bit)
  Memory storage for image picture data
- Supervision of the following external statuses:
  Presence of document on hopper
  Presence of document at scanning position
- Send motor control
- Fan motor control
- Drum motor control
- Resist motor control
- FM336 Modem
  Modulation and demodulation for V.34
  Modulation and demodulation for V.33 and V.17
  Modulation and demodulation for V.29 and V.27 ter
  Generation of signal-frequency signals for tonal signals
  Detection of signal-frequency tonal signals
  Generation of dual time multiple-frequency signals for tone dialing

(2) Operation panel unit
- Supervision of switches on operation panel
- Control of LEDs on operation panel
- Control of LCD on operation panel

LED : Light-emitting diode
LCD : Liquid crystal display

(3) NCU board
EN9 .... UK, France, and EC countries
INU ..... US, Canada, Australia, New Zealand, Singapore, China, Malaysia and non-EC countries (Poland etc.)

- Conversion of receive data and receive signals to internal signal level
- Conversion of send data and send signals to external signal level
- Generation of dial pulses to telephone line
- Detection of ringing signal
- Detection of busy tone (conjunction with Modem unit)
- Detection of hook up signal
- Interface with telephone handset (option)
- Output of send data and send signals to telephone line
- Input of receive data and receive signals from telephone line

(4) Power Low Voltage unit: 120V/230V
- Conversion of main alternating current to the following direct currents:
  +5VSIN DC power supply (230V only)
  +5V DC power supply
  +8V DC/-8V DC power supply
  +24V DC power supply
  +30V DC power supply
- Supplying of main alternating current to fuser unit

(5) High Voltage unit: H08
- Generation of medium voltages +300V, -300V, +400V, -450V and 0V
- Generation of high voltages -1.35 kV, -0.75 kV and +3.5 kV

(6) MEM (memory) board (Option)
- DRAM (2 Mbytes: 512 k ∞ 8 bit ∞ 5 or 4 Mbytes: 512 k ∞ 8 bit ∞ 8)
  Memory storage for ECM operations, memory broadcast, delayed broadcast, etc.

(7) CTT board (Option)
- Driver circuits

(8) NTIF board (Option)
- Ringer circuit

(9) TENKEY board (Option)
- TEN-key pad

(10) HOOK board (Option)
- Hook switch circuit

(11) TELU board (Option): For US and Canada
- Speech network circuit
  Basic speech functions included.

(12) TEL-W2 board (Option): For Sweden, Finland, The Netherlands, Ireland, Portugal, New Zealand, Australia, Belgium, Spain, Greece, Switzerland and Austria.
- Basic speech functions included.
- Separate receive pre-amp with signal output terminal.
- Separate receive power amp input terminal, because it is possible to mix input.
- Balanced input for microphone input to provide immunity to common mode noise.
- MF pre-amp input terminal is possible to mixing input.
- Dial pulse waveform improvement circuit included.
- Manual pad function included.
- The transmit, receive, and DTMF amplifiers are provided with AGC according to the line current.

(13) TEL-W1 board (Option): For UK, Norway, Denmark and Italy.

- Basic speech functions included.
- Separate receive pre-amp with signal output terminal.
- Separate receive power amp input terminal, because it is possible to mix input.
- Balanced input for microphone input to provide immunity to common mode noise.
- MF pre-amp input terminal is possible to mixing input.
- Dial pulse waveform improvement circuit included.
- Manual pad function included.
- The transmit, receive, and DTMF amplifiers are provided with AGC according to the line current.
- Dialing functions included.

(14) TEL-W2D board (Option): For Germany

- Basic speech functions included.
- Separate receive pre-amp with signal output terminal.
- Separate receive power amp input terminal, because it is possible to mix input.
- Balanced input for microphone input to provide immunity to common mode noise.
- MF pre-amp input terminal is possible to mixing input.
- Dial pulse waveform improvement circuit included.
- Manual pad function included.
- The transmit, receive, and DTMF amplifiers are provided with AGC according to the line current.

(15) TQSB board (Option)

Second paper cassette unit.

- MOS-CPU
- Motor control

(16) G4N board (Option)

- ISDN Communications

2.1 Explanation of Signal Flow

(1) Copy Mode

Figure 2.2 shows the picture signal route in local copy mode

One-line picture data is transferred to A/D converter (analog/digital) via operational amplifier from the scanning unit (CIS: contact image sensor) as an analog data. After conversion from analog data to 6-bit digital data by A/D converter, the picture data is sent to IEXSEED (image processing LSI) and SRAM. Here, the picture data undergoes various kinds of picture processings (IEXSEED and SRAM), converted to two-level binary data (black and white) and then sent to IOGA4 (scanning control). The one-line binary picture data from IOGA4 is stored into DRAM. When the data for one page has been stored in the DRAM, the data is read out from the DRAM and sent to IOGA4. The data is converted into a serial data by the picture control of IOGA4 and transferred to the LED print head for printing as HDATA0. Writing of data into the page memory is also possible during the printing operation.

(2) G3 Send Mode

Figure 2.3 shows the G3 send picture signal route

In the G3 mode, the data transfer route from the scan unit up to the DRAM is the same as in the copy mode described in (1).

The picture data for one-line is transferred from DRAM to IOGA4 (CPU). The IOGA4 (CPU) performs the picture data processing (encode) for this picture data (FILLER, fill bits are inserted etc.) and again stores into the DRAM. The stored encoded data is output from DRAM to the MODEM under the control of IOGA4 (CPU). After modulation, the picture signal “S” is sent to the NCU board as the transmission data. The transmission data “S” goes through the amplifier and is sent to the telephone line L1 and L2 via the transformer T1 as high speed signal.

(3) G3 Receive Mode

Figure 2.4 shows the G3 receive picture signal route

In the G3 mode, the high-speed picture signal arriving from the telephone line at L1 and L2 of NCU passes through the transformer T1 and the amplifier and is input to the MODEM as “R” signal. After demodulation by modem, the picture data is sent to IOGA4 (CPU). The IOGA4 (CPU) performs the picture data processing (decode) for this picture data and stores into the DRAM. Then, the stored picture data is again written into DRAM (as a page memory) by the picture processing control of IOGA4 (CPU). When the data for one page has been stored in the DRAM, the data is read out from the DRAM and sent to IOGA4. The picture data is converted into a signal data by the printer control of IOGA4 and transferred to the LED print head for printing as HDATA 0.

(4) PC Print

Figure 2.5 shows the signal route in PC Print mode.

The data input from the MCNT's parallel I/F is input, through the IOGA4, to the DRAM using DMA.

The input data is transferred to the Decoding block in the IOGA4 using DMA.

In the Decoding block, the data is expanded in the 1-line raster buffer in the IOGA4. Then, the expanded data is sent to the video block in the IOGA4 in response to a 1-line synchronous signal. In the video block, image processing is performed for printing and the resultant data is transferred to the LED head.

(5) PC Scanner

Figure 2.6 shows the signal route in PC Scanner mode.

The data transfer route from the scan unit up to the DRAM is the same as in the copy mode described in (1).

The data input to the IOGA4 is temporarily written into the external DRAM (4 megawords ∞ 16 bits). The written data is compressed to TIF data by firmware, then written into the external DRAM again.

The written TIF data is sent to the MCNT's parallel I/F through the IOGA4.

(6) PC-FAX G3 TX

Figure 2.7 shows the signal route in PC-FAX TX mode.
The data encoded and HDLC framed in PC is input to IOGA4 via the parallel I/F to be transferred to the DRAM under the control of DMA.
The stored encoded data is output from DRAM to the MODEM under the control of IOGA4 (CPU). After modulation, the picture signal "S" is sent to the NCU board as the transmission data. The transmission data "S" goes through the amplifier and is sent to the telephone line L1 and L2 via the transformer T1 as high speed signal.

(7) PC-FAX G3 RX

Figure 2.8 shows the signal route in PC-FAX RX mode.
In the PC-FAX RX mode, the high-speed picture signal arriving from the telephone line at L1 and L2 of NCU passes through the transformer T1 and the amplifier and is input to the MODEM as "R" signal. After demodulation by modem, received binary data is sent from the MODEM to DRAM, under the control of IOGA4 (CPU).
The data written into the DRAM is transferred to the IOGA4 by the DMA to be output to PC via parallel I/F. The PC deframes and decodes the received data to convert it into image data.

(8) ISDN-G3 TX mode

Figure 2.9 shows the signal route of this mode.
The signal route from the image sensor to the I-Exseed, DRAM, IOGA4(CPU), and MODEM is the same as that of the item (2), “G3 send mode”. The analog signal “S” encoded and modulated in the MODEM is sent to the G4N board as the send signal. The analog signal is converted into the digital signal by the PCM codec on the G4N board to be sent to an ISDN line.

(9) ISDN-G3 RX mode

Figure 2.10 shows the signal route of this mode.
The high-speed digital image signal received from an ISDN line is converted to analog signal by the PCM Codec on the G4N board. The converted analog signal is then input to the modem on the MCNT as “R” signal. The signal route from the modem to the LED head is the same as that of the item (3) “G3 receive mode”.
The signal demodulated by the modem is decoded by the IOGA4 (CPU) and stored into the DRAM. The signal is then converted into print data by the IOGA4 (printer control) to be transferred to the LED head as HDATA0.

(10) ISDN PC-FAX G3 TX mode

Figure 2.11 shows the signal route of this mode.
The signal route from the PC to the modem is the same as that described in item (6) “PC-FAX TX”. The data encoded and HDLC framed in the PC is transferred to the DRAM via the parallel I/F, IOGA4, and DMA. The signal is then transferred to the modem by the IOGA4(CPU).
The modulated analog signal “S” is sent to the G4N board, where the signal is converted into digital signal to be output to an ISDN line.

(11) ISDN PC-FAX G3 RX MODE

Figure 2.12 shows the signal route of this mode.
The high-speed digital image signal received from an ISDN line is converted to analog signal by the PCM Codec on the G4N board. The converted analog signal is then input to the modem on the MCNT as “R” signal. The signal route from the modem to PC is the same as that of the item (7) “PC-FAX RX”.
The received binary data demodulated by the modem is sent to the DRAM via the IOGA4(CPU) and transferred to the IOGA4 by the DMA to be output to the PC via parallel I/F. The PC deframes and decodes the received data to convert it into image data.

(12) ISDN G4 TX mode

Figure 2.13 shows the signal route of this mode.

The signal route from the image sensor to the I-Exseed, DRAM, IOGA4(CPU), and DRAM is the same as that of the item (2), “G3 send mode”.

The read one-line image data is stored in the DRAM, encoded by the IOGA4(CPU) and again stored in the DRAM.

In G4 TX mode the encoded data is transferred by the control of IOGA4(CPU) to the dual-port RAM(DPRAM) on the G4N board. The transferred data is sent to a line via the ISDN controller and ISDN driver by the control of the CPU on the G4N board.

(13) ISDN G4 RX mode

Figure 2.14 shows the signal route of this mode.

The signal received from an ISDN line is transferred to the dual-port RAM (DPRAM) by the control of the CPU via the ISDN driver and ISDN controller of the G4N board.

Notified of the existence of received G4 data by interruption, the IOGA4 (CPU) of the 46F board transfers the data from the DPRAM to the DRAM.

The signal route from the DRAM to the LED head is the same as that of item (3) “G3 receive mode”.

The IOGA4 (CPU) reads out the data stored in the DRAM and decodes it to store it again in the DRAM. The data is transferred to the IOGA4 (printer control) by the DMA, converted into image data, and transferred to the LED head for printing.

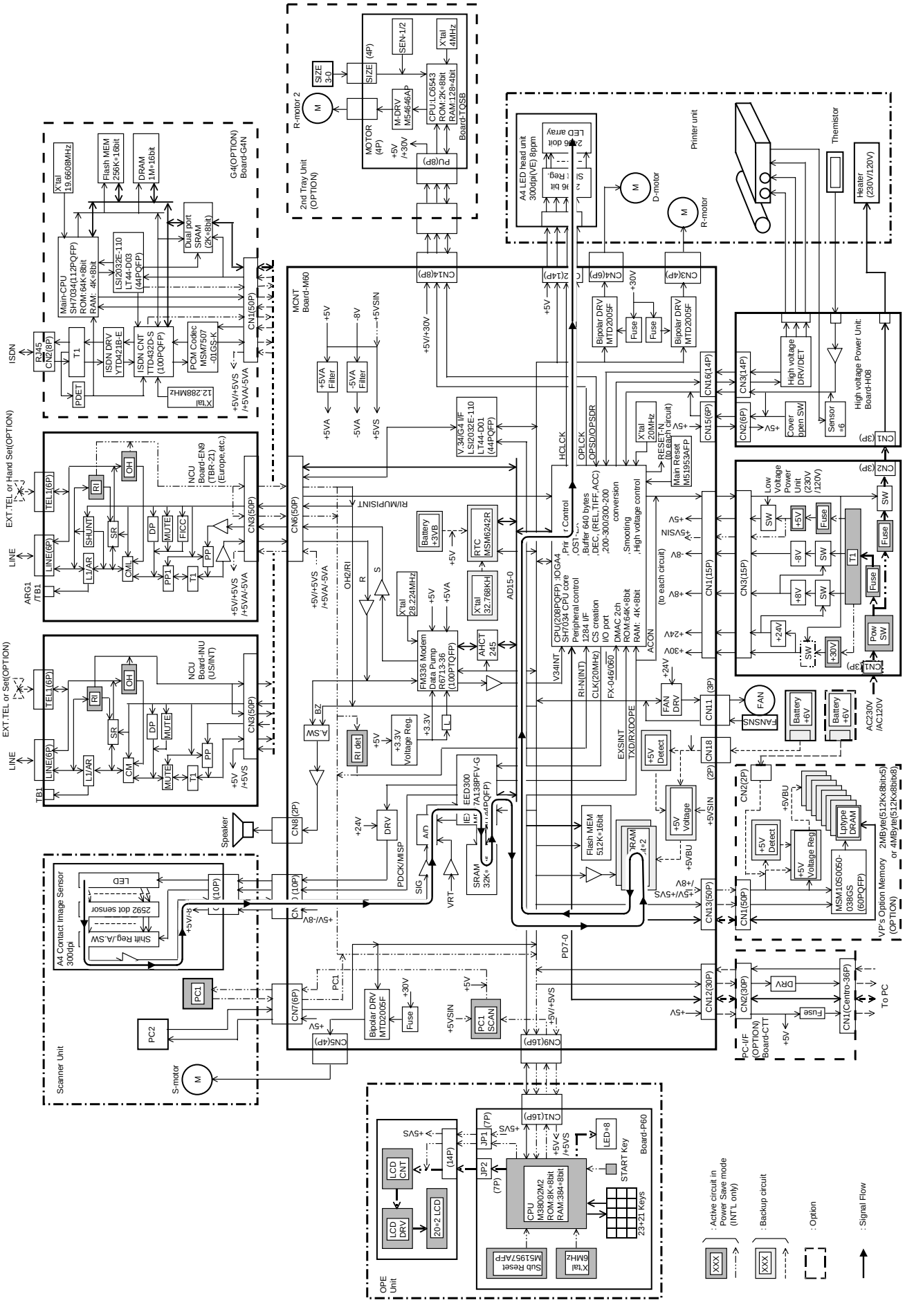

Figure 2.2 Copy Picture Signal

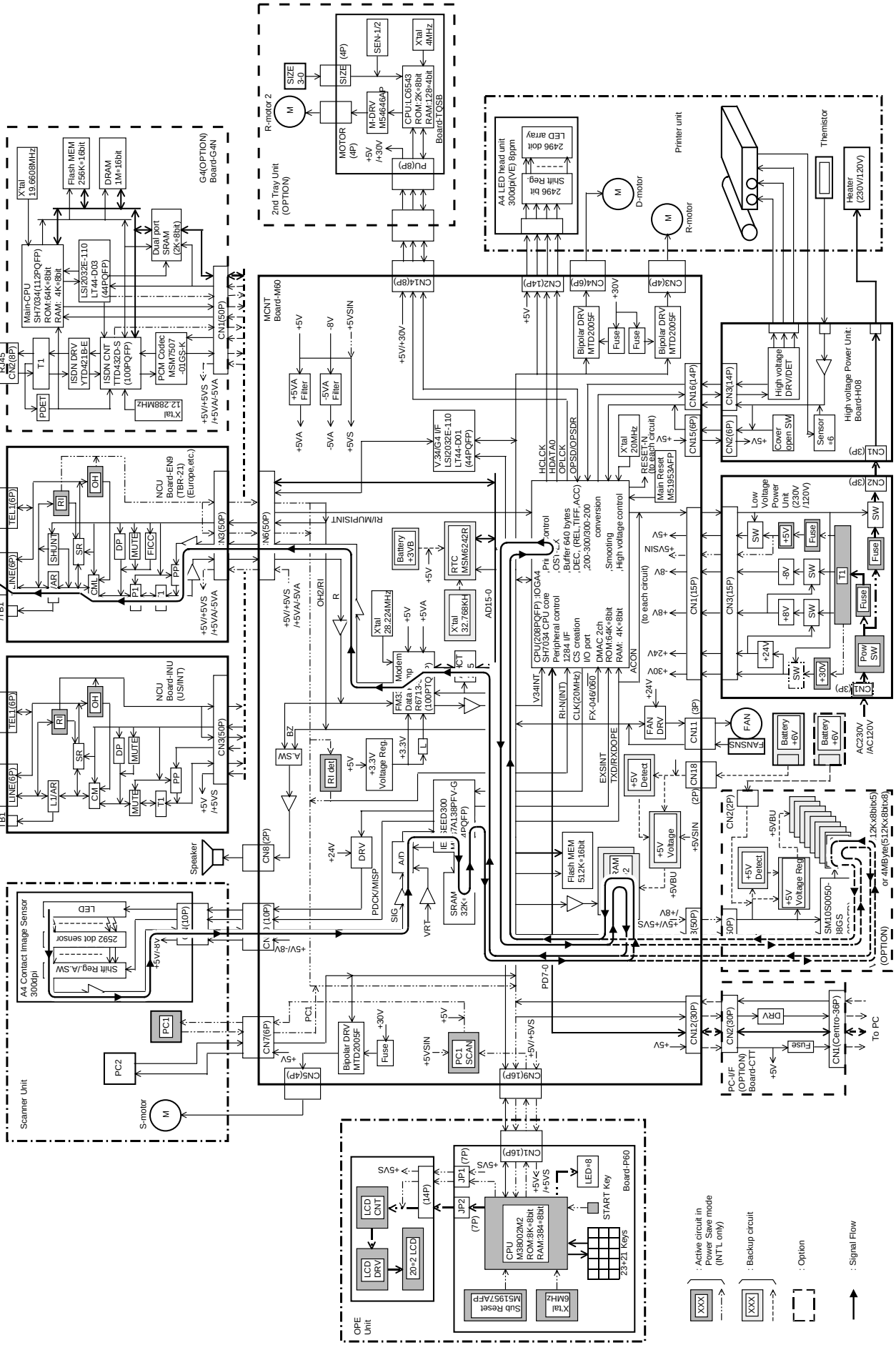

Figure 2.3 G3 Send Picture Signal

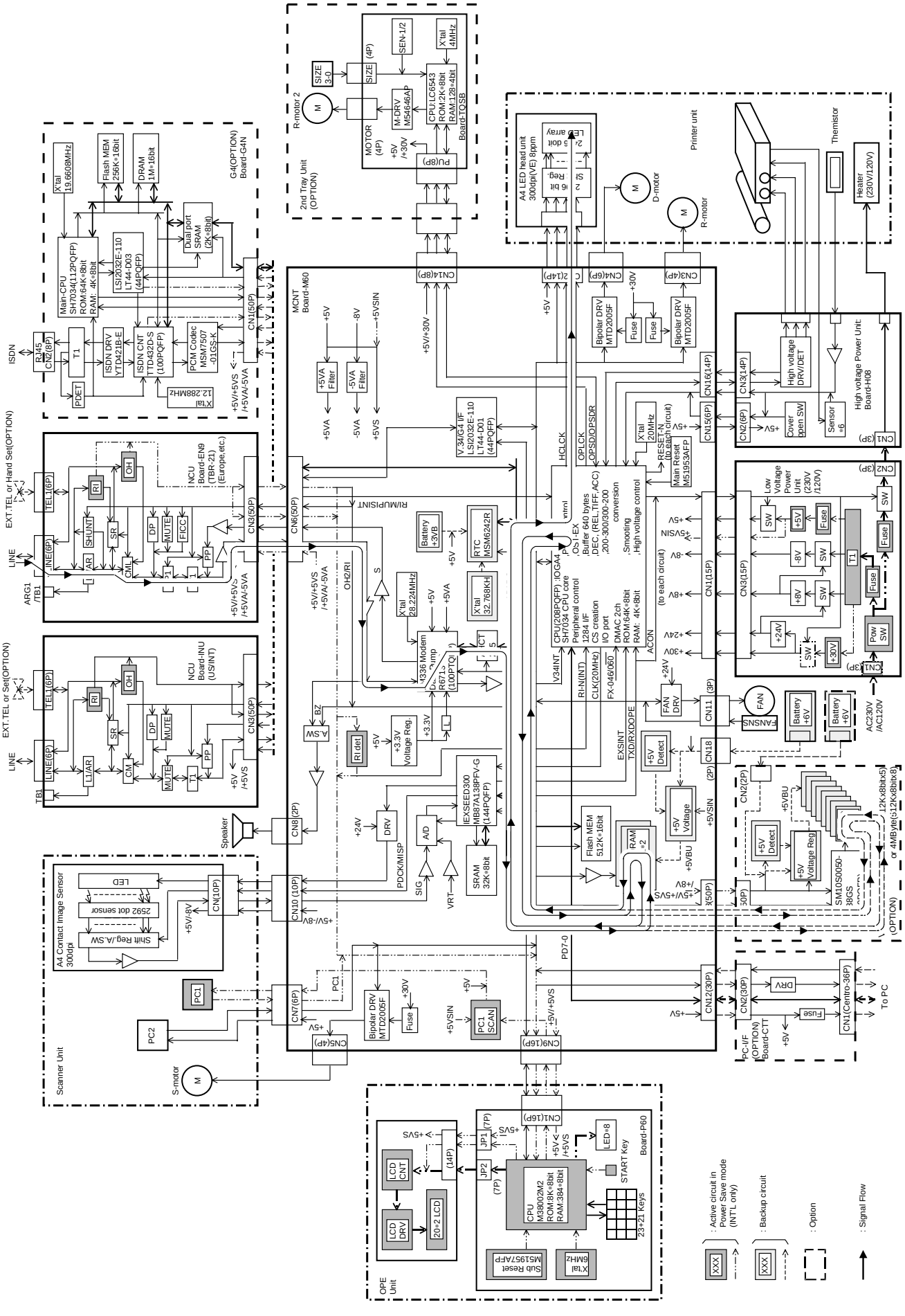

Figure 2.4 G3 Receive Picture Signal

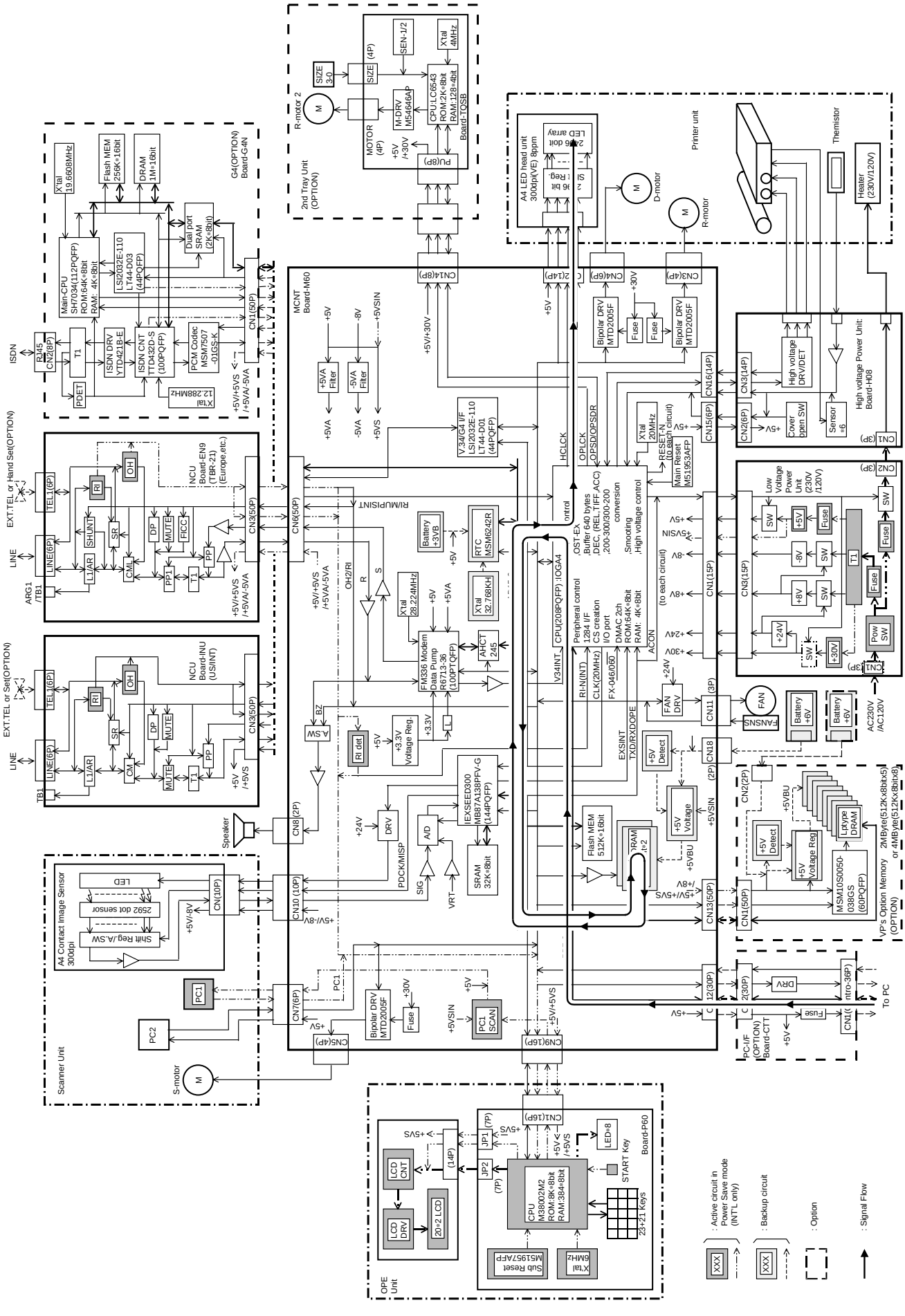

Figure 2.5 PC Print Picture Signal

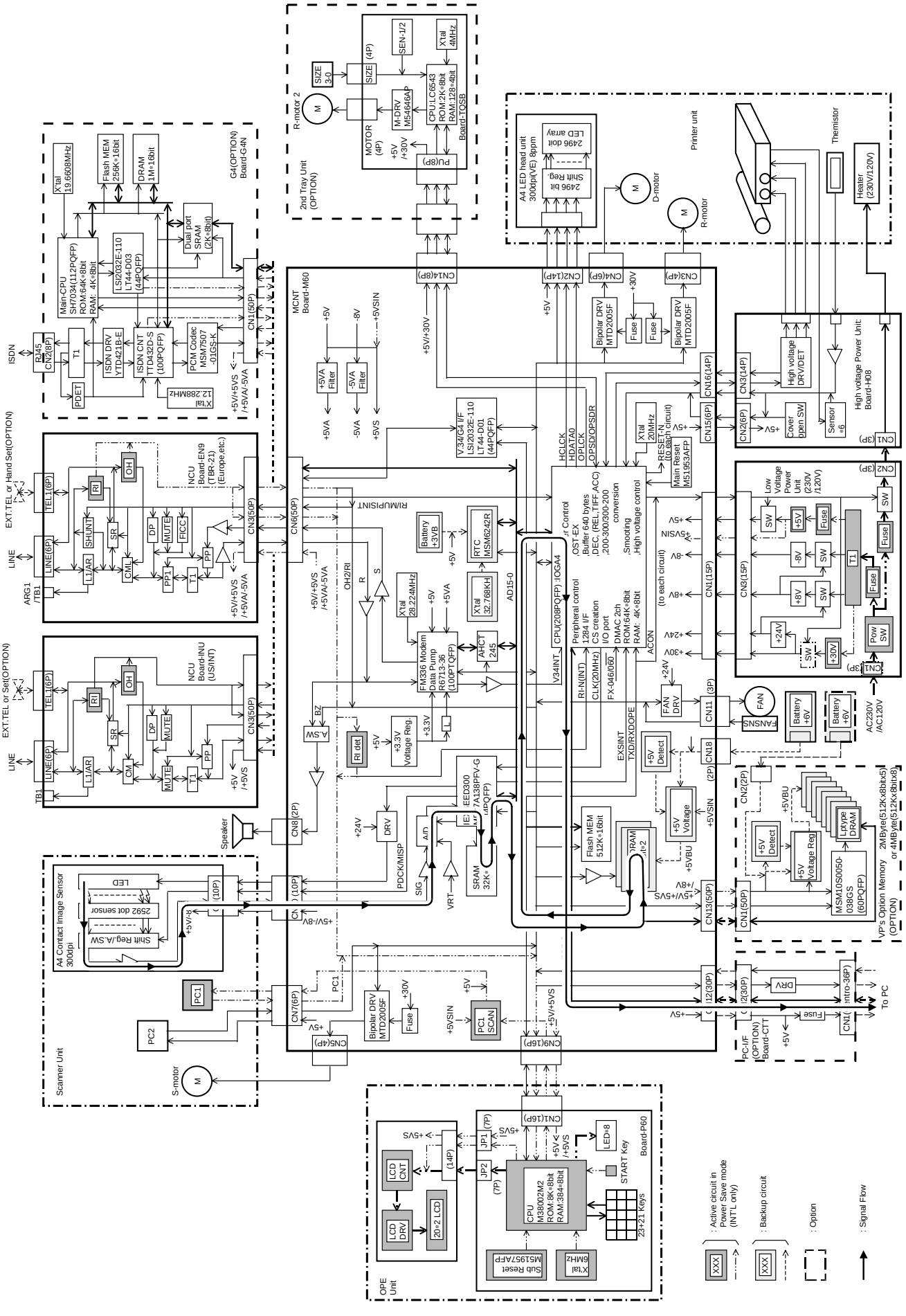

Figure 2.6 PC Scanner Picture Signal

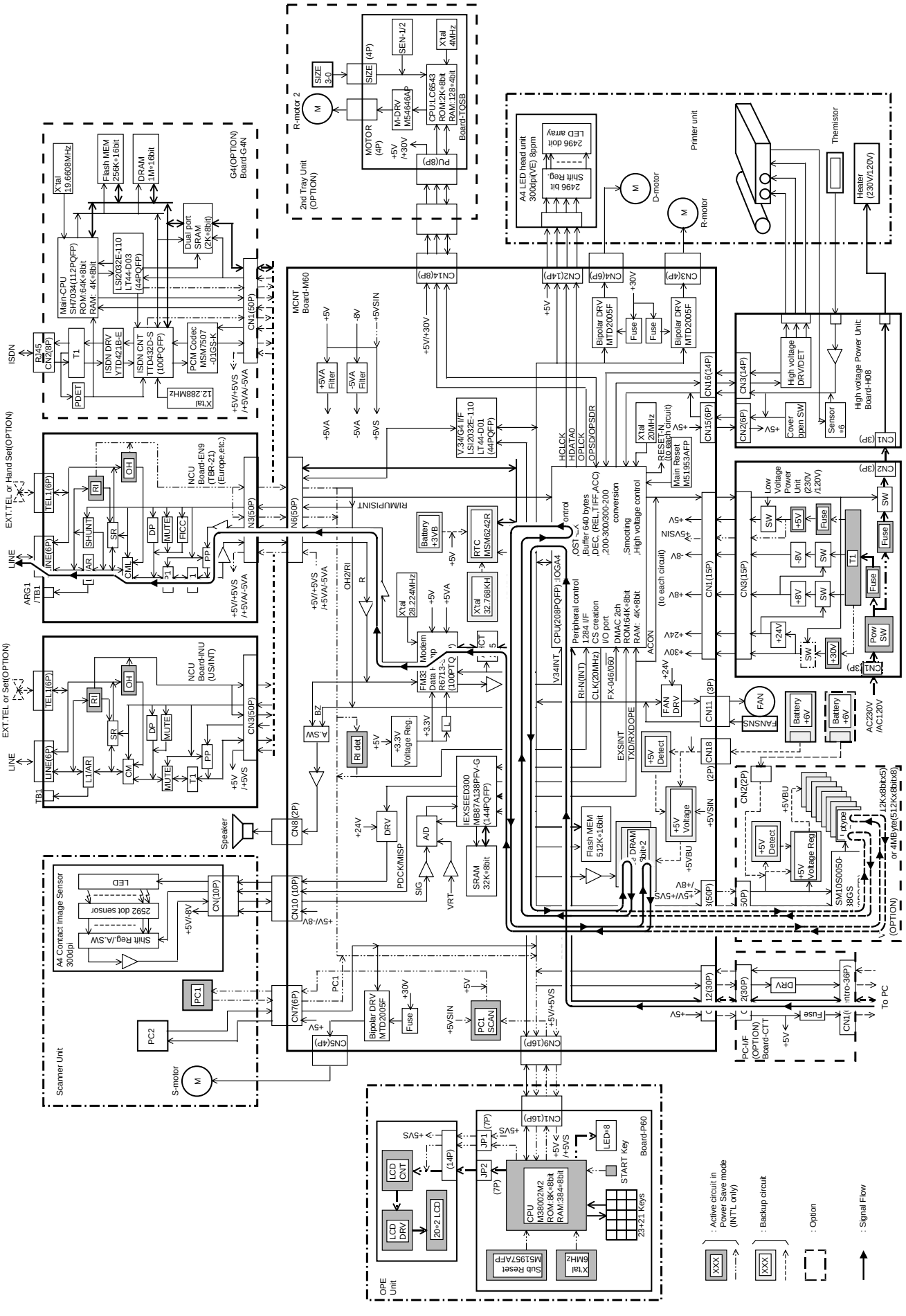

Figure 2.7 PC-FAX G3 TX Picture Signal

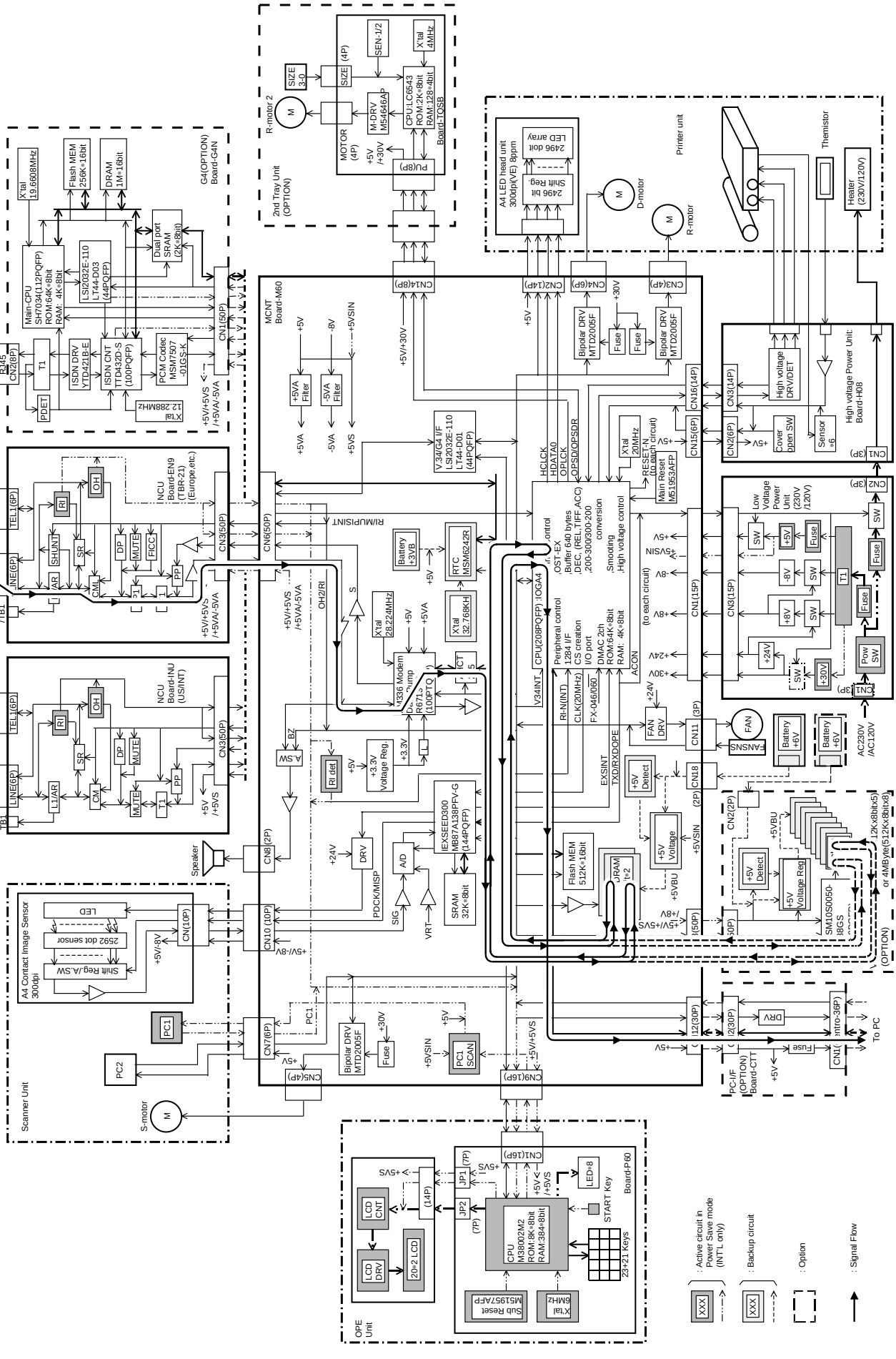

Figure 2.8 PC-FAX G3 RX Picture Signal

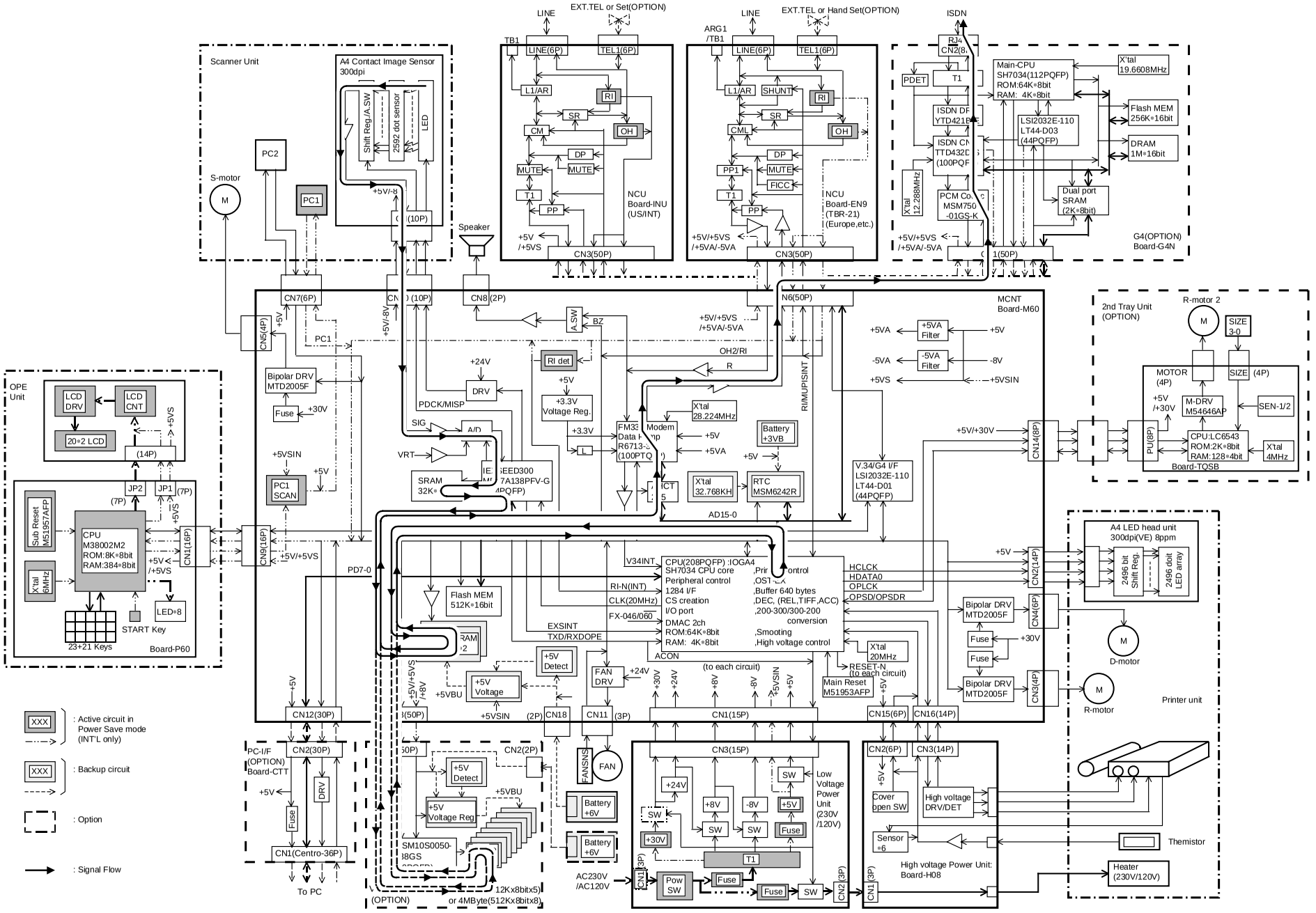

Figure 2.9 ISDN G3 TX Picture Signal

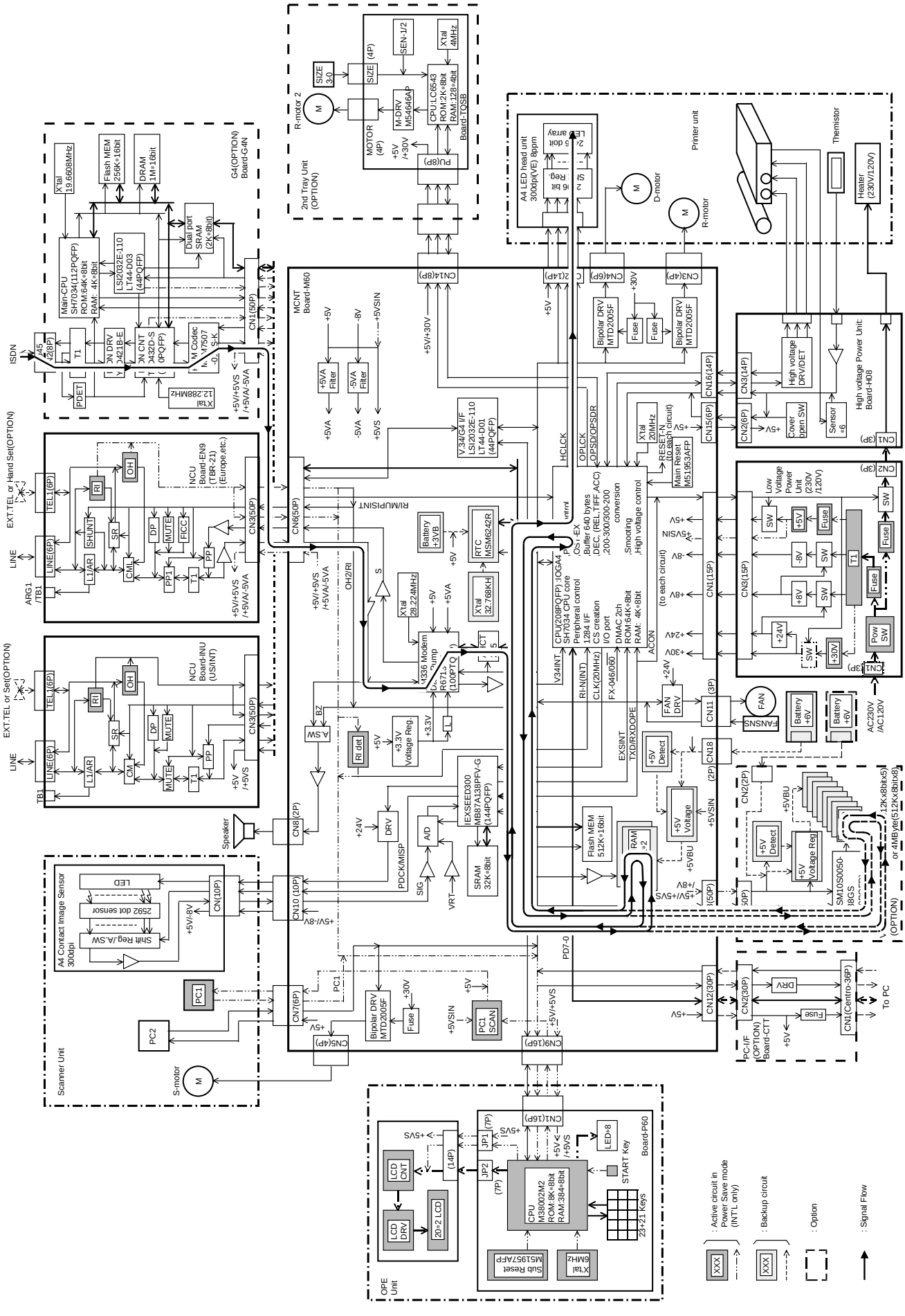

Figure 2.10 ISDN G3 RX Picture Signal

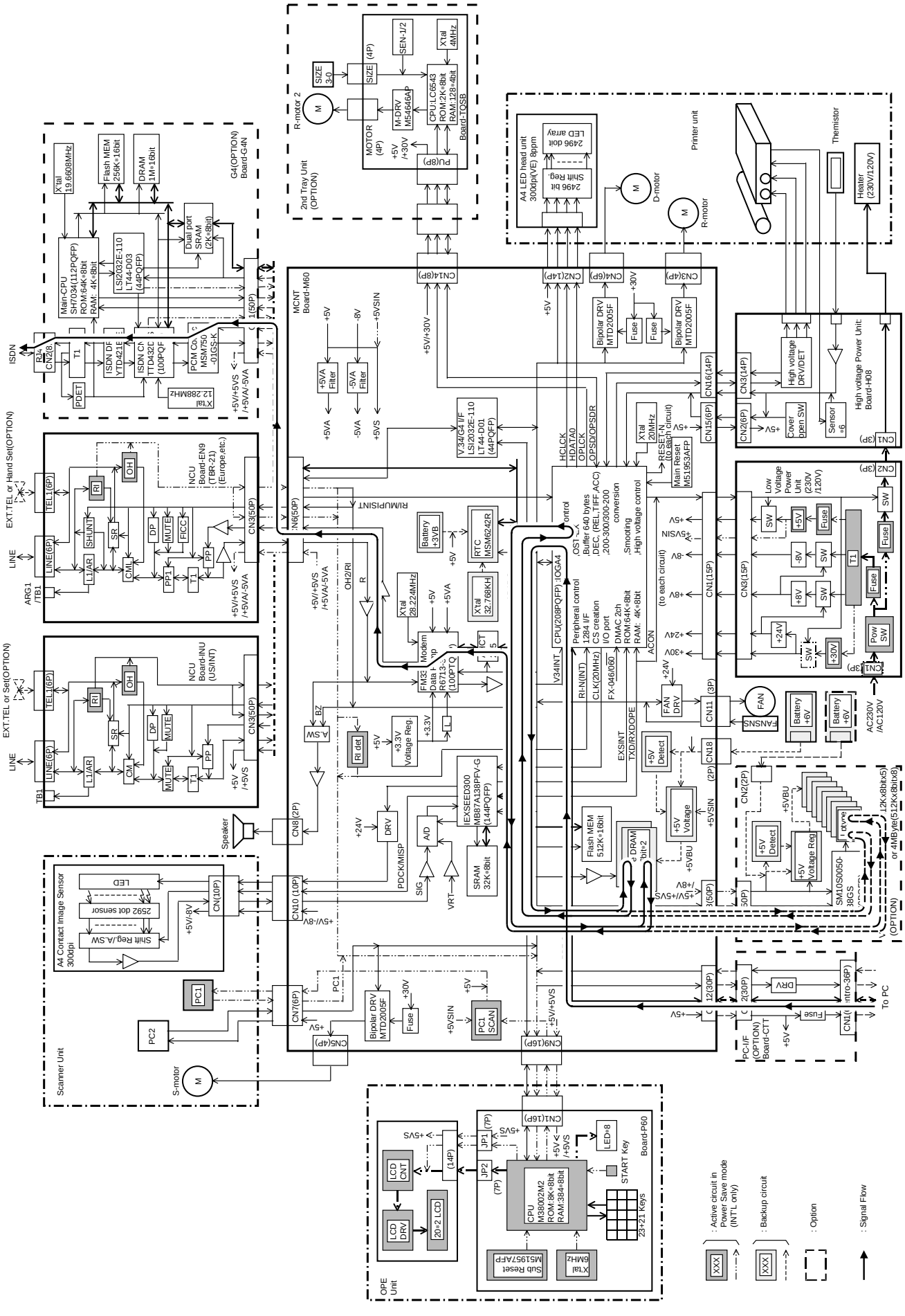

Figure 2.11 ISDN PC-FAX G3 TX Picture Signal

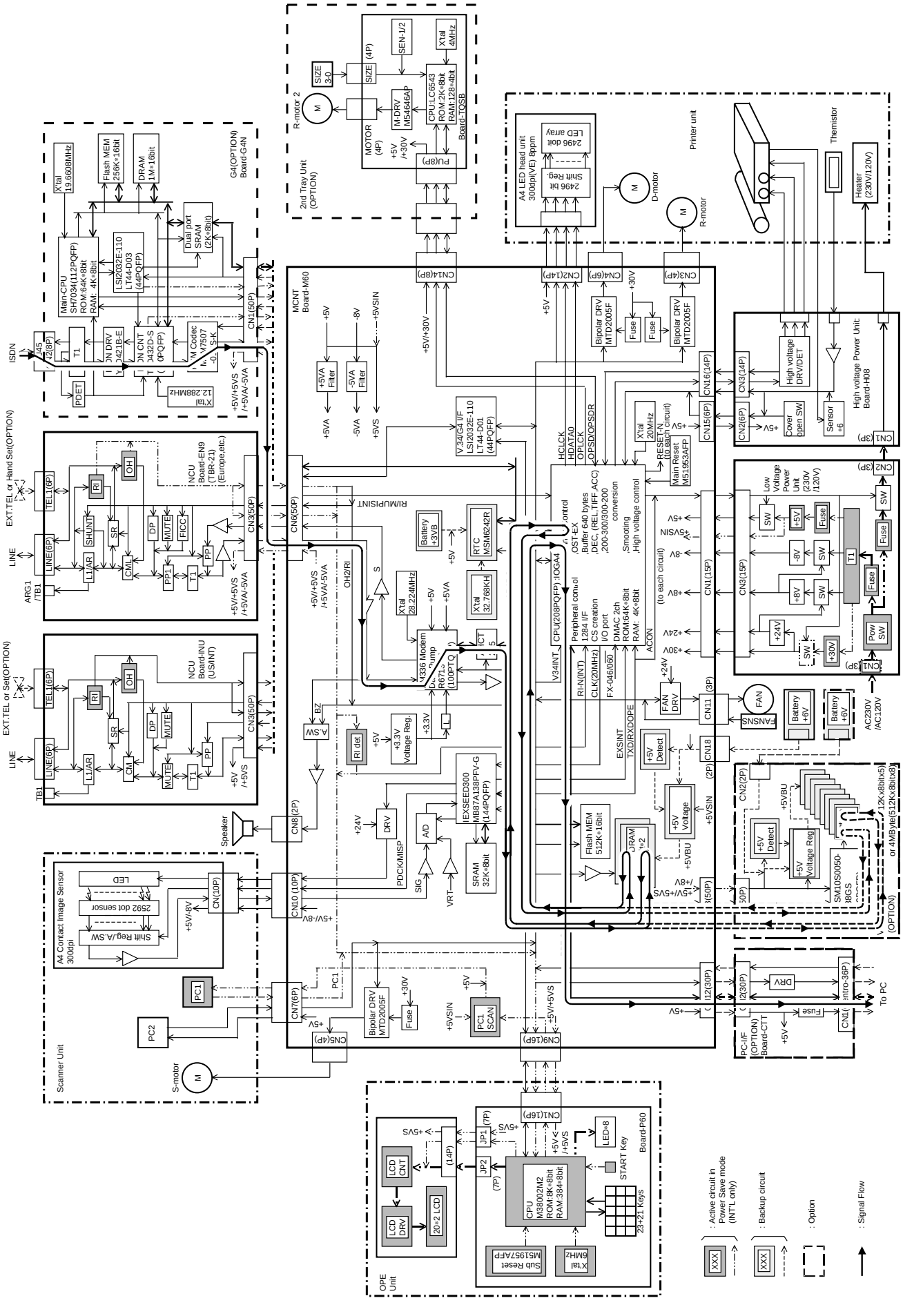

Figure 2.12 ISDN PC-FAX G3 RX Picture Signal

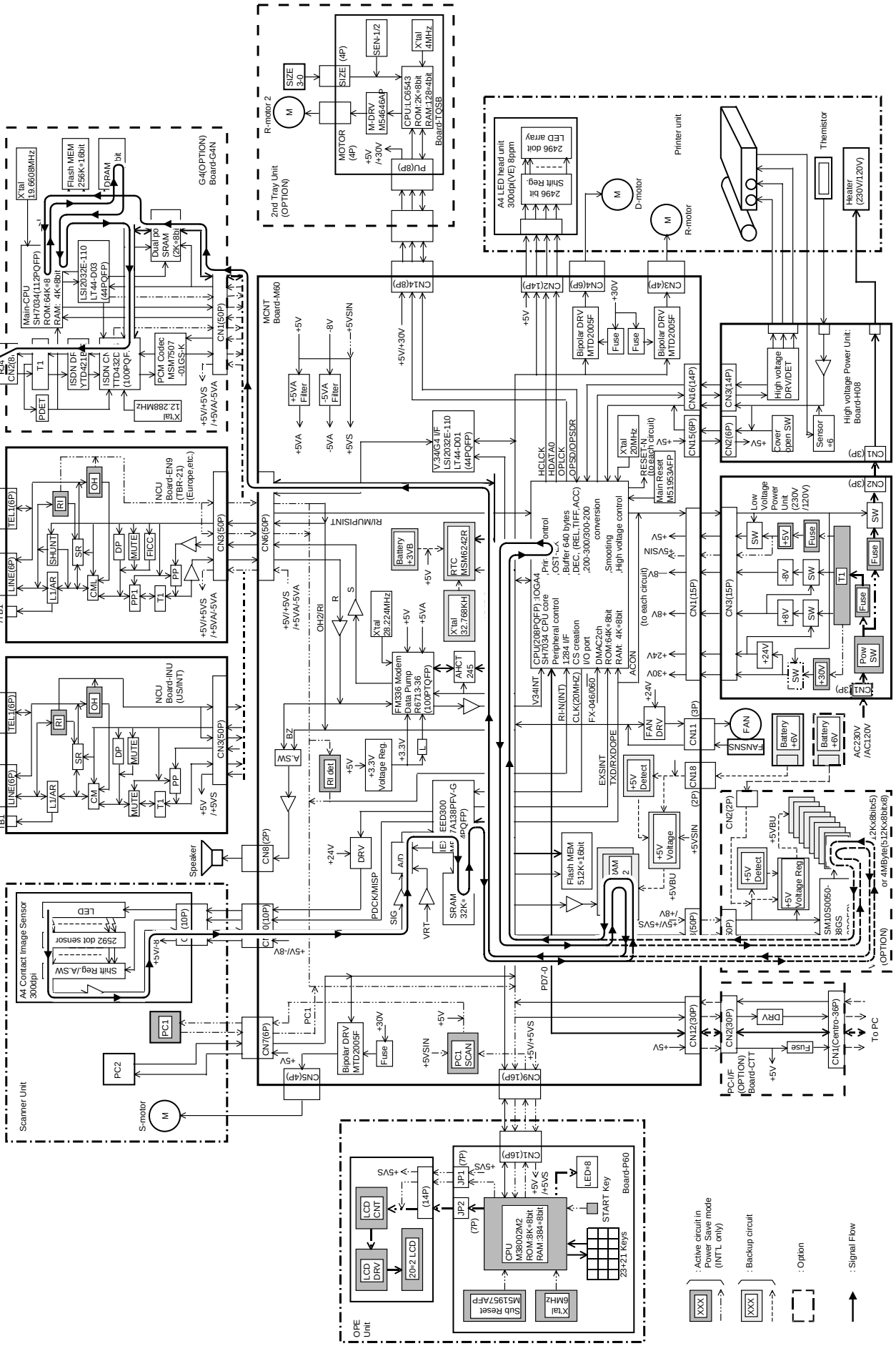

Figure 2.13 ISDN G4 TX Picture Signal

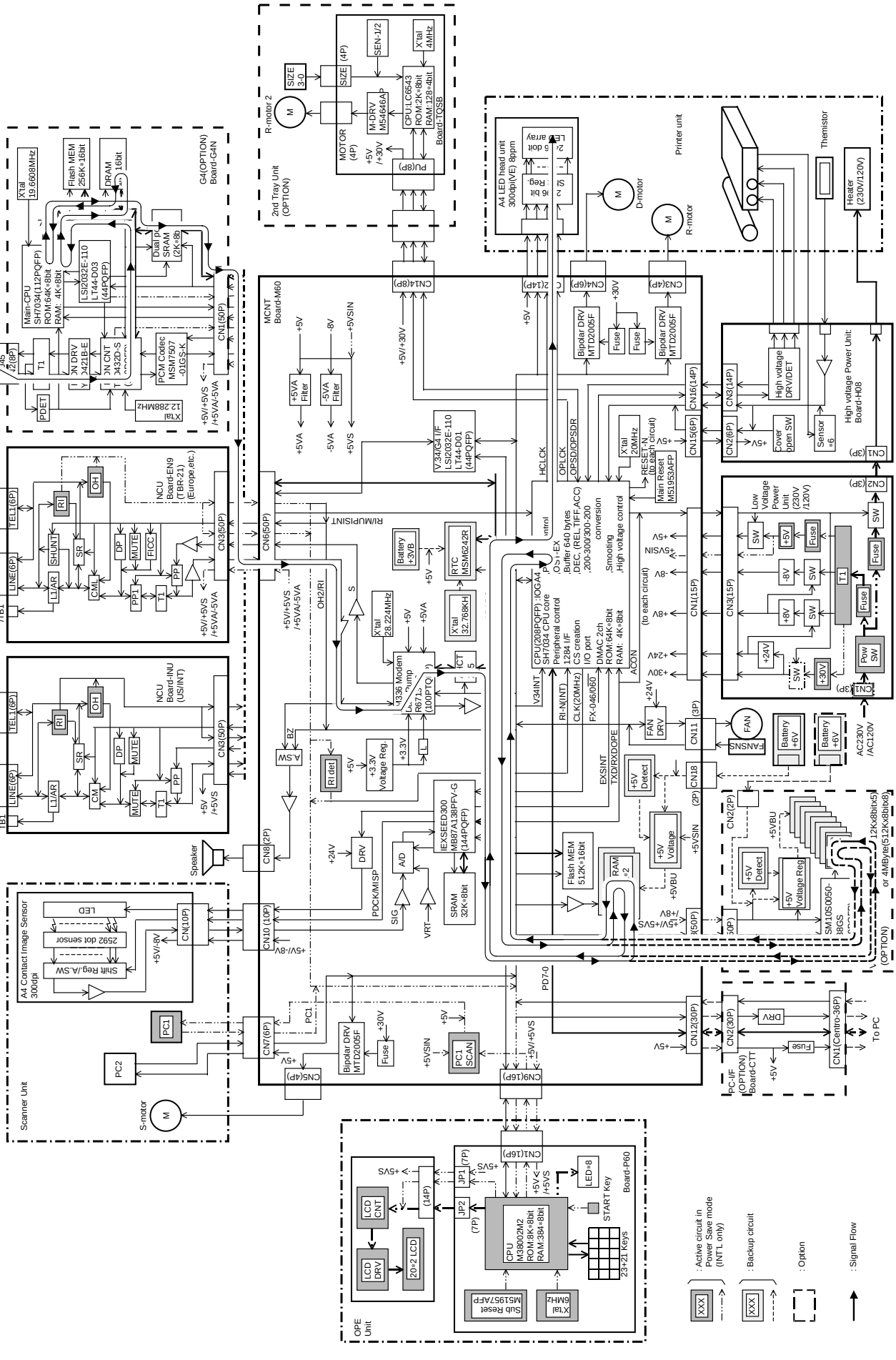

Figure 2.14 ISDN G4 RX Picture Signal

3. Circuit Diagram

3.1 M60 Circuit Diagram

3.1.1 M60 Circuit Diagram (Page 1/13)

1. Block diagram
   The circuit diagram shown on page 1/13 consists of CPU, crystal oscillator circuit and main reset signal generator.

   Figure 3.1 shows the block diagram of CPU and the peripheral circuits.

   1) CPU (HG72C706H01FD) is newly developed LSI for scanning, printing control and provided with a built-in CPU.

      - CPU contains the following functions:
        • Printing control
        • Various image data processing control for scanning data
        • Strobe signals control for LED head
        • Smoothing control for printing data
        • DMA (Direct Memory Access) control
        • Interrupt procedure control
        • A/D converter
        • Bus state control
        • Programmable pattern control
        • 16 bit integrated timer pulse unit (ITU)
        • Timing pattern control (TPC)
        • Serial communication interface (SCT)
        • Input/output port

   2) Crystal oscillator circuit
      X3 is 20MHz crystal oscillator. The output wave is fed to the CPU through pin 14 and 15. CLK (20MHz) is used as the system clock.

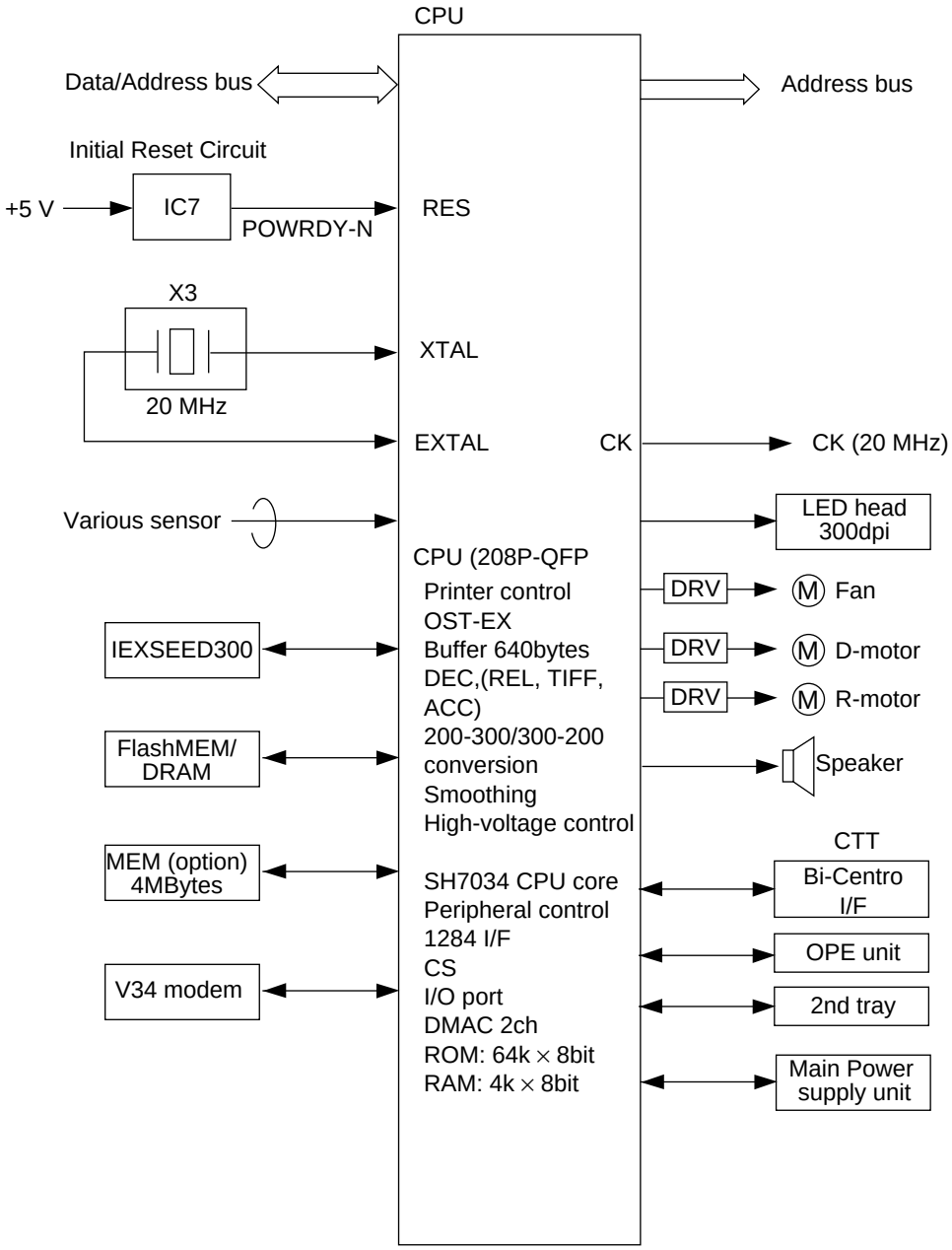

Figure 3.1 Related Signals of CPU

3.1.2 M60 Circuit Diagram (Page 2/13)

1. Block diagram
   The circuit diagram shown on page 295 consists of Flash memory, DRAM, Real time clock IC and Back up battery circuit.

   Figure 3.2 shows the block diagram of Flash memory, DRAM and Real time clock.

2. Function
   1) Flash memory (FLS)
      Flash memory (electrically erasable and programmable device) is used for the main software program, which is stored in EP-ROM of the current OKIFAX 5650. Other than the function of EP-ROM, Flash memory is also used for the user data area instead of SRAM chips.

      • 1M Byte Flash memory ∞ 1 (FLS)
        Used for work area, report recording etc.

   2) DRAM
      RAM2 and RAM3: 2MB (512k words ∞ 16 bit) ∞ 2 chips
      • Used as follows:
        Picture memory for the ECM send/receive mode.
        Picture memory for the memory transmission mode.
        Picture memory for the retransmission mode.
        Picture memory for the reception in memory.
        Editing for report printing.

   3) Back-up battery circuit
      The non-rechargable lithium battery supplies voltage to a real-time clock IC at AC main interruption.

   4) Real-time clock IC (IC4)
      IC4 is a real-time clock IC used as a timepiece to display the date and time in year, month, day, hour, minute, and second units. Its input/output signals are the 4-bit data bus (D0 - D3), 4-bit address bus (A1 - A4) and the control signals, RTCCS, MDMRD-N and MDMWR-N which perform a CPU-controlled read operation (M/D/Y H:M, Data read) and write operation (M/D/Y H:M, Data setting).

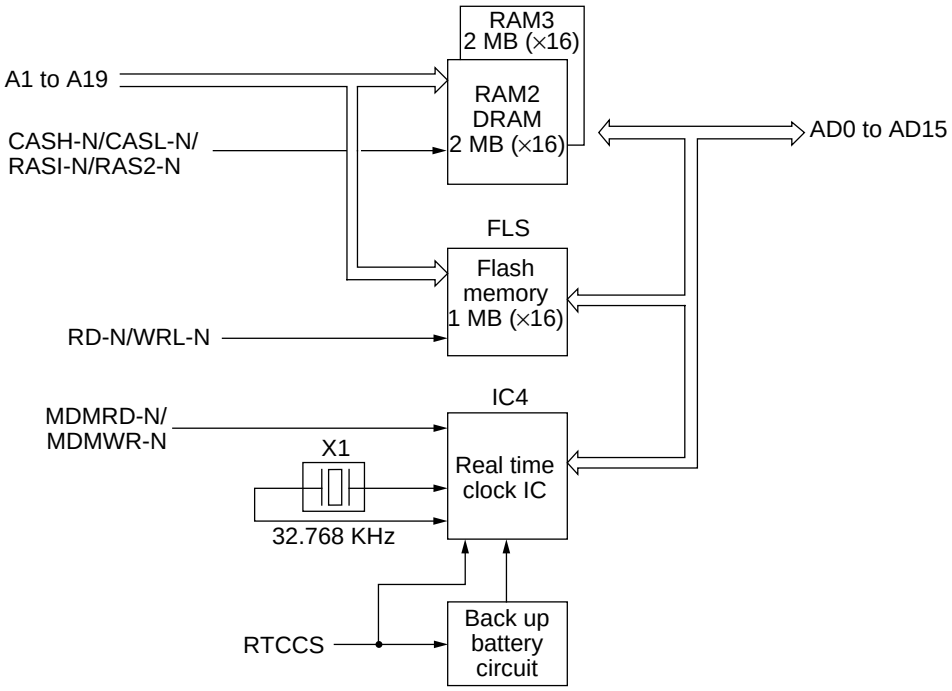

Figure 3.2 Block Diagram of FLS, MASK and Real Time Clock

3.1.3 M60 Circuit Diagram (Page 3/13)

1. Block diagram
   The circuit diagram shown on page 3/13 consists of the following function:
   - IC17 (A/D converter) and amplifier
   - Connector CN10 that provides an interface between M60 board and CIS (contact image sensor).

   Figure 3.3 shows the related signals and block diagram of CIS.

2. Function
   One-line picture data is read in the sequence from the scanning unit (CIS) as SIG signal (analog data) to A/D converter (analog/digital converter) of IC17 via amplifier. After conversion from analog data to 6-bit digital signal (SDT2 - SDT7) under the control of IC17, the picture data is sent to IEXSEED300 (scanning control LSI) of IC14. Here, the picture data undergoes various kinds of picture processings.

   Sensor interface signal output from IEXSEED300.
   - LEDON : LED on/off control signal
   - PDCK : Scanning sensor drive clock (1.25MHz)
   - MISP : Scanning synchronous signal (2.5 msec)
   - ADCLK : Sampling clock for A/D converter (1.25MHz)

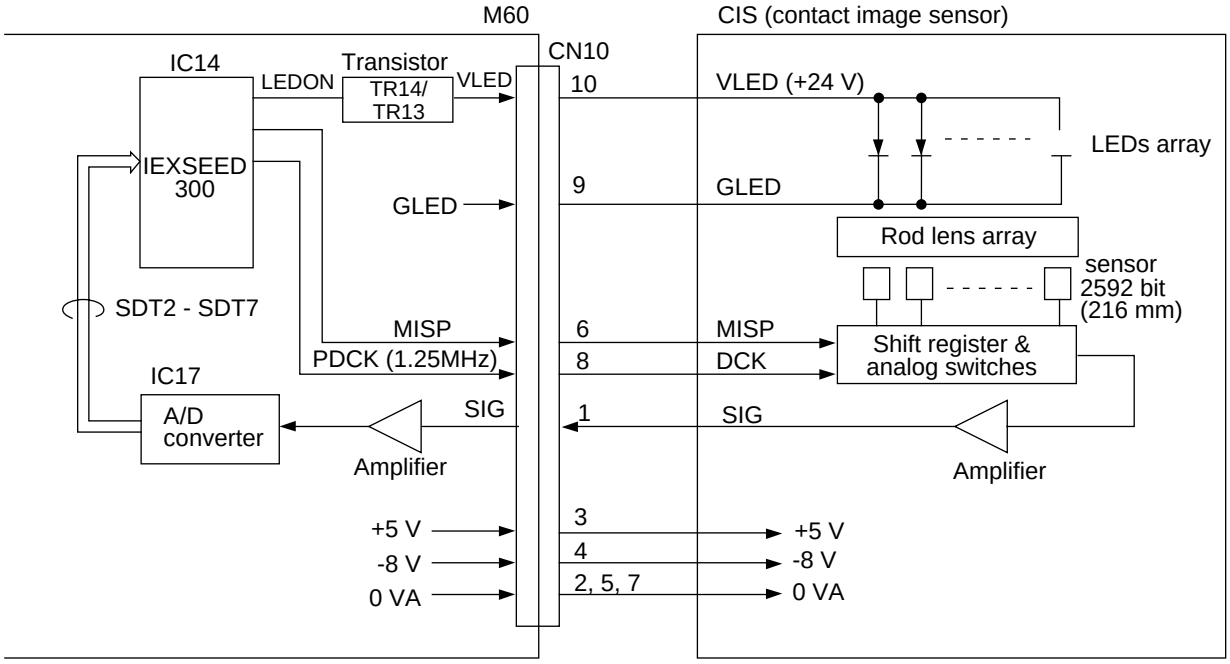

Figure 3.3 Related Signals and Block Diagram of CIS (contact image sensor)

3.1.4 M60 Circuit Diagram (Page 4/13)

1. Block diagram
   The circuit diagram shown on page 5/16 consists of the IEXSEED300 (image processing LSI) of IC14 and SRAM.

   Figure 3.4 shows the related signals of IEXSEED300.

2. Functions
   IEXSEED300 is developed LSI for the image processing.
   IEXSEED300 contains the following functions:
   - Contact image sensor driver
   - Send motor forward rotation/chopping control
   - Line buffer control

3. SRAM
   32 ∞ 8 kbit SRAM ∞ 1 (RAM1)
   Stores the dark/light level correction data.
   Error diffusion data and image separation data are processed by IEXSEED300.

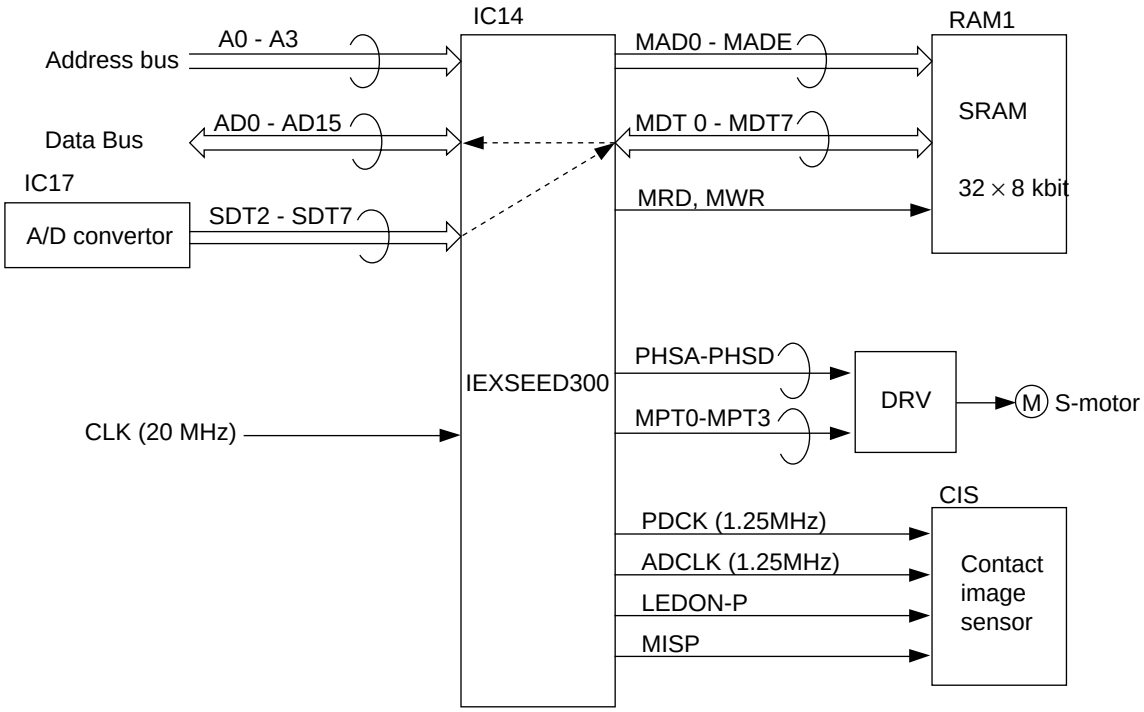

Figure 3.4 Related Signals of IEXSEED300

3.1.5 M60 Circuit Diagram (Page 5/13)

1. Block diagram
   The circuit diagram shown on page 5/13 consists of the following functions and connectors:
   - IC3 (Send motor drive)
   - Connector CN5 that provides an interface between M60 board and the send motor.

   Figure 3.5 shows the related signals of the send motor.

2. Function
   1) Send motor rotaion and chopper control
      Send motor drive signals are generated by the IEXSEED300 and output to send motor via IC3 (motor drive IC) of this circuit.

      Note: The built-in motor control circuit of IEXSEED300 consists of the following blocks:
      - Setting of the excitation operation
      - Setting of the chopping operation
      - Setting of the chopping frequency
      - Setting of the motor forward
      - Setting of the motor excitation method (1-2/2-1 phase excitation)

      a) Send motor rotaion control
      There are several cases of the rotation operation:
      Forward rotation for feeding documents.
      - Case 1: Feeding document from hopper to the position where one line data is read.
      - Case 2: Feeding document while reading.
      - Case 3: Feeding document after a page has been read.

      b) Send motor chopper control
      The purpose of chopper control is to reduce the current to the motor by setting the phase signal on and off intermittently when a time lapse exceeding a specific time occurs without a phase update.

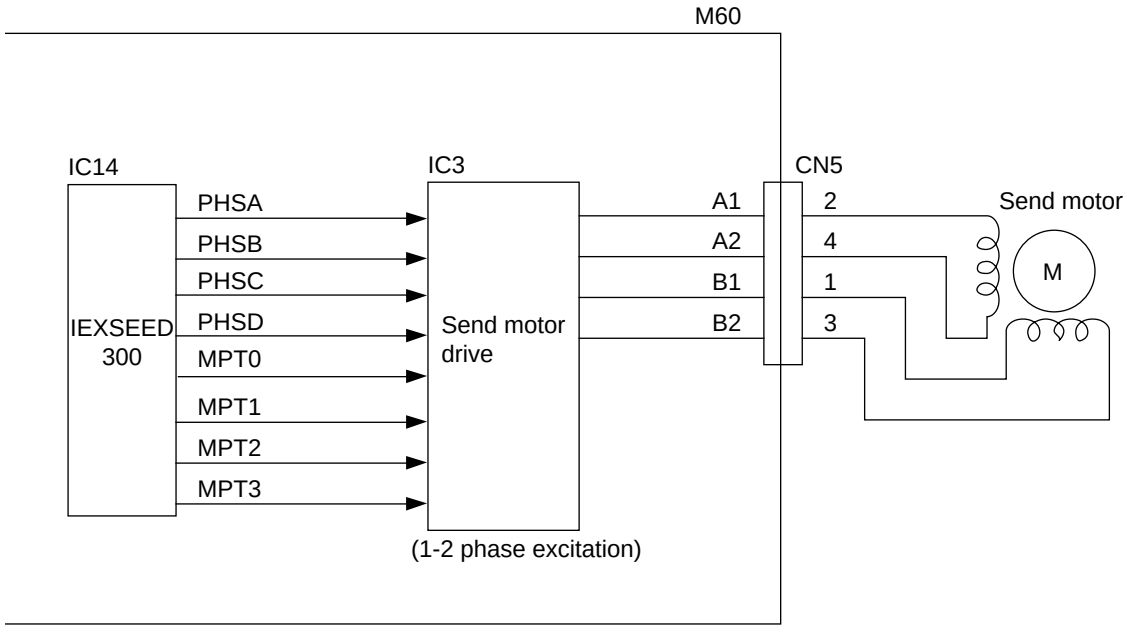

Figure 3.5 Related Signals of Send Motor

3.1.6 M60 Circuit Diagram (Page 6/13)

1. Block diagram

The circuit diagram shown on page 6/13 consists of the following functions and connectors:

- IC1 (Drum motor driver)
- IC2 (Resist motor driver)
- Connector CN3 that provides an interface between M60 board and the resist motor.
- Connector CN4 that provides an interface between M60 board and the drum motor.

Figure 3.6 shows the related signals of the drum motor and resist motor.

2. Function

1) Drum motor control

The drum motor is driven by the motor driver IC1. It is two-phase excited and bipolar-driven according to the DMPH1 and DMPH2 signals that are generated from the CPU. The DMON2-N, DMENA-N signal are generated from CPU. This drum motor rotates the image drum.

2) Resist motor control

The resist motor is driven by the motor driver IC2. It is two-phase excited and bipolar-driven according to the RMPH1 and RMPH2 signals that are generated from the CPU. The RMON1-N, RMON2-N signal ARE generated from CPU. This resist motor rotates the hopping (paper hopping) roller and the resist (paper feed) roller.
Refer to Appendix B of the page B-3.

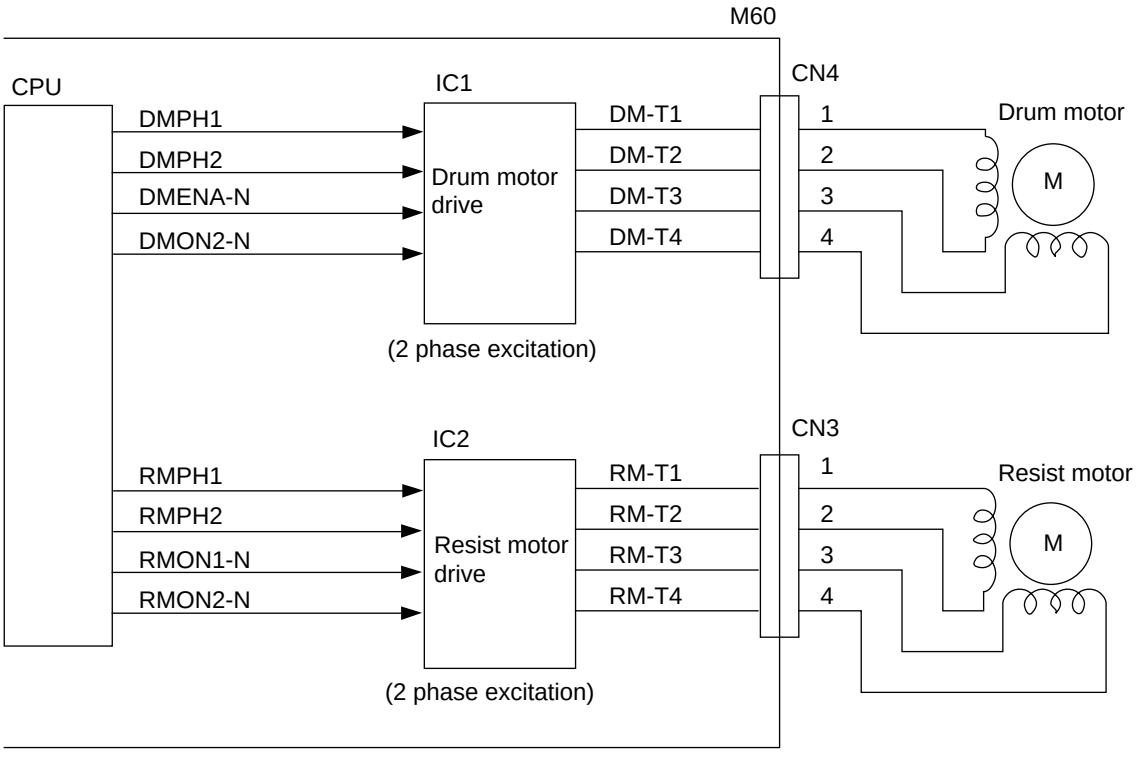

Figure 3.6 Related Signals of Drum/Resist Motor

3.1.7 M60 Circuit Diagram (Page 7/13)

1. Block diagram
   The circuit diagram shown on page 7/13 consists of connector CN2 that provides an interface between M60 board and LED print head.

   Figure 3.7 shows the related signals and block diagram of LED print head.

2. Function
   Data of 1664 LEDs on the LED print head is loaded into the shift registers by the HCLCK (6.67 MHz) signal. After the 1664 bit (208mm) data is loaded in the shift registers, it is then loaded in the latch circuit by the HLATCH signal. The turning -on and off of the LEDs are controlled by STRB1-N to STRB4-N signals.

   LED head interface signals output from CPU
   - HDATA 0 : Print data i.e., data to be printed
   - HCLCK : Transfer clock for print data (6.67 MHz)
   - HLATCH : Latch signal for print data
   - STRB1-N to STRB4-N : LED head strobe signals

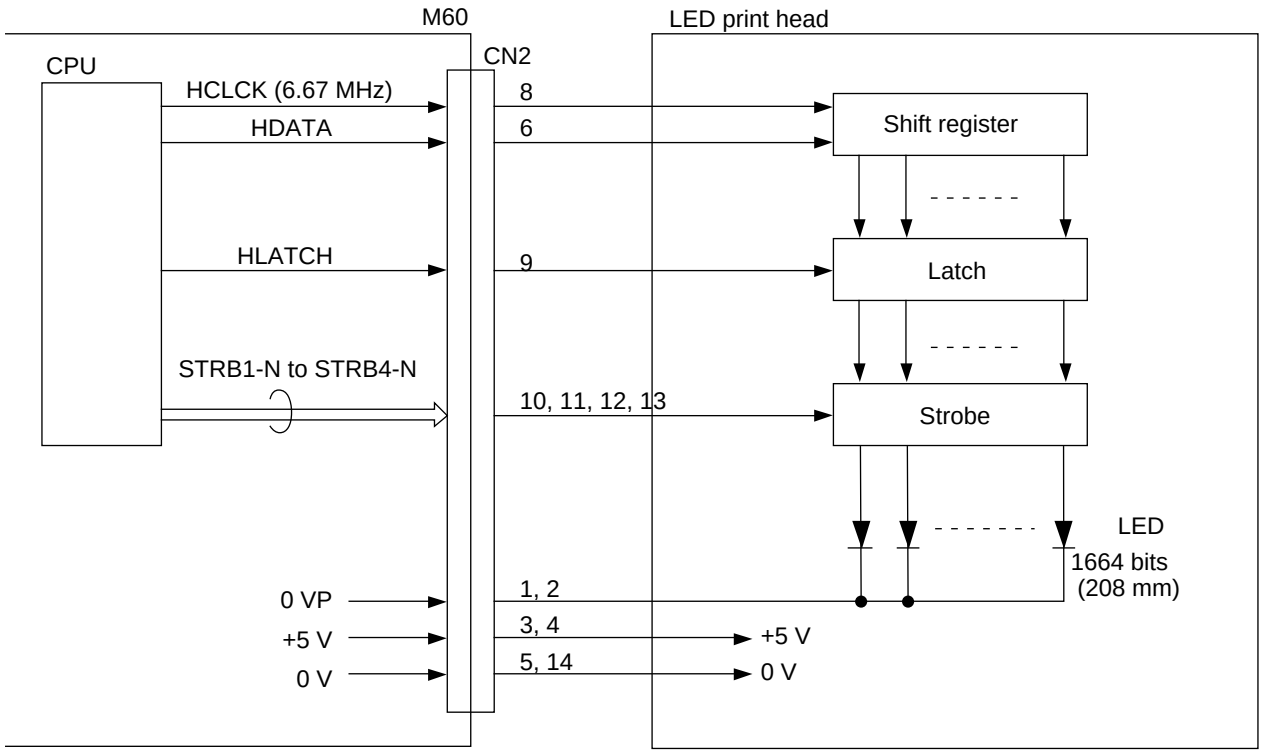

Figure 3.7 Related Signals and Block Diagram of LED Head

3. Block diagram

The circuit diagram shown on page 7/13 consists of the following connectors:

- Connector CN11 that provides an interface between M60 board and the fan motor.
- Connector CN14 that provides an interface between M60 board and the second tray (option).

Figure 3.8 shows the related signals of the fan motor.
Figure 3.9 shows an interface between M60 board and the second tray (option).

4. Function

1) Fan motor control

The fan motor is controlled by the FANON signal generated from CPU under the temperature control of the heater. The operating status of the fan is supervised by the FANSNS-N signal.

The fan rotates in the following 3 status:

- Normal mode
- Cover open
- Paper jamming occurring in the paper transport route

2) Second tray (option)

Second tray consists of the following functions:

- Paper capacity : 500 sheets
- Paper size : A4, Letter, Legal
- Paper-size selection : Manual
- Cassette/no-cassette selection : Automatic
- Paper/no-paper selection : Automatic
- Paper route open to facsimile transceiver unit : Automatic decision

Control method:
When second tray is installed on the facsimile transceiver unit, the tray is connected to the facsimile transceiver unit by a connector. The tray controls by the command from CPU of PU (printer unit) section.

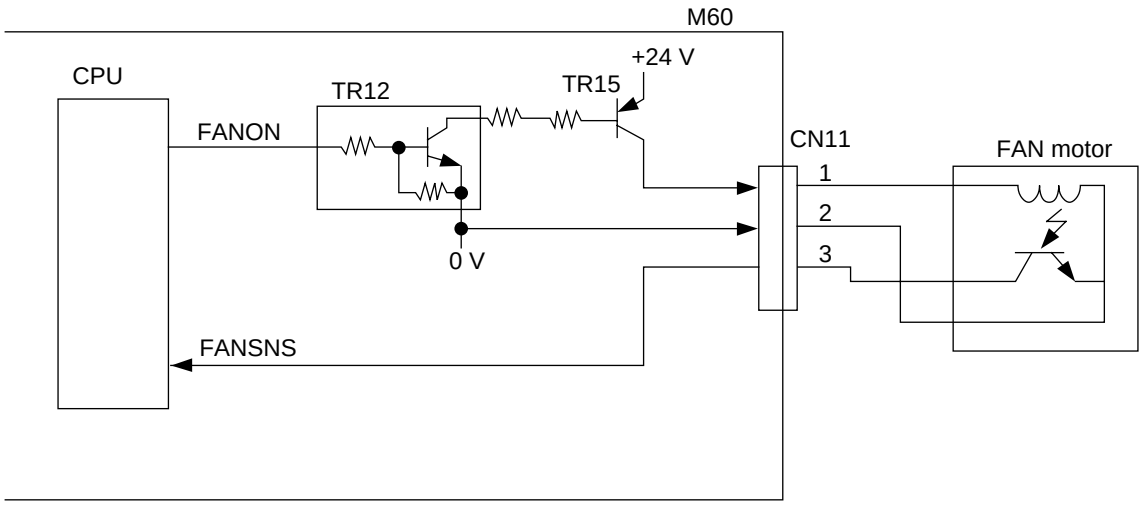

Figure 3.8 Related Signals of Fan Motor

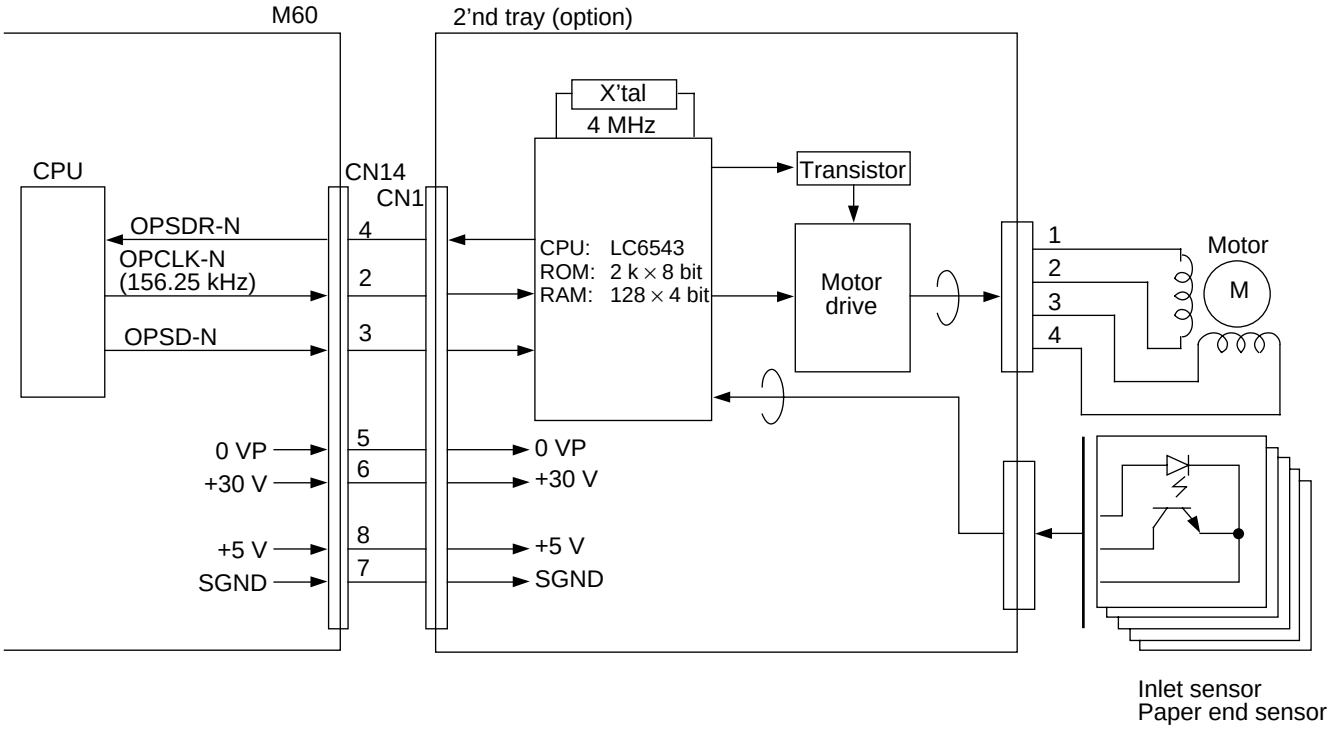

Figure 3.9 Interface between M60 Board and 2'nd Tray

3.1.8 M60 Circuit Diagram (Page 8/13)

1. Block diagram
   The audio monitor circuit on page 8/13 that consists of IC13 (analog switch IC) and IC15 (amplifier) generates the following audio monitor.
   - Line monitoring
   - Buzzer signals

   Figure 3.10 shows the block diagram of audio monitor circuit.

2. Function
   1) Line monitoring
      Send and receive signals are input from the transformer on the NCU board to this circuit as RM signal and the signal power is input to the IC13. The IC13 adjusts the monitor volume by MONC0, MONC1 and MONC2 signal under the control of CPU. Output (high and low) from IC13 passes through the amplifier and fed to the speaker as a SP signal.

      - MONC0/MONC1/MONC2 signal : Volume control signal.

      Note: In case of transmission mode, the monitor will be available during dialing, but the monitor will be switched off automatically after the elapse of specified time (about 5 sec).

   2) Buzzer control
      Alarm and other signals (key touch etc.) are input from CPU to this circuit as BZ signal. The various buzzer signals are sounded under the control of CPU.

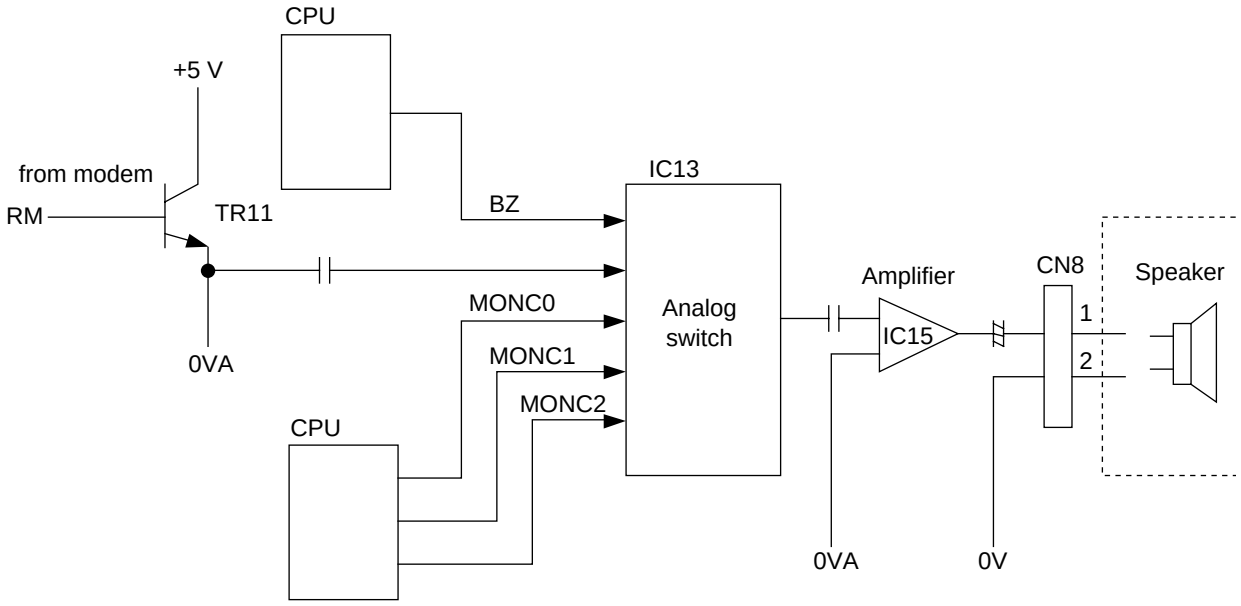

Figure 3.10 Block Diagram of Audio Monitor Circuit

3.1.9 M60 Circuit Diagram (Page 9/13)

1. Block diagram
   The circuit diagram shown on page 9/13 consists of Modem (33.6 kbps).

   Modem consists the following functions:
   - Modulation/demodulation
     Modulation type:
     1) ITU-T Rec. V34 (33600/31200/28800/26400/24000/21600/19200/16800/14400/12000/9600/7200/4800/2400 bps) for G3 picture data.
     2) ITU-T Rec. V17 (14400/12000/9600/7200 bps) for G3 picture data.
     3) ITU-T Rec. V29 (9600/7200 bps) for G3 picture data.
     4) ITU-T Rec. V27 ter (4800/2400 bps) for G3 picture data.
     5) ITU-T Rec. V21 channel 2 (300 bps) for binary signals defined in ITU-T Rec. T.30.
   - Automatic adaptive equalizer for G3 receive data with 300 bps data excluded.
   - Generation of signal tones
   - PB tone (multi-frequency tone) generation
   - Detection of single tones
   - D/A converter for send data (TX)
   - A/D converter for receive data (RX)
   - Amplitude equalizer for RX
   - Selectable attenuation for TX
   - Automatic gain control

   Figure 3.11 shows the related signals of Modem.

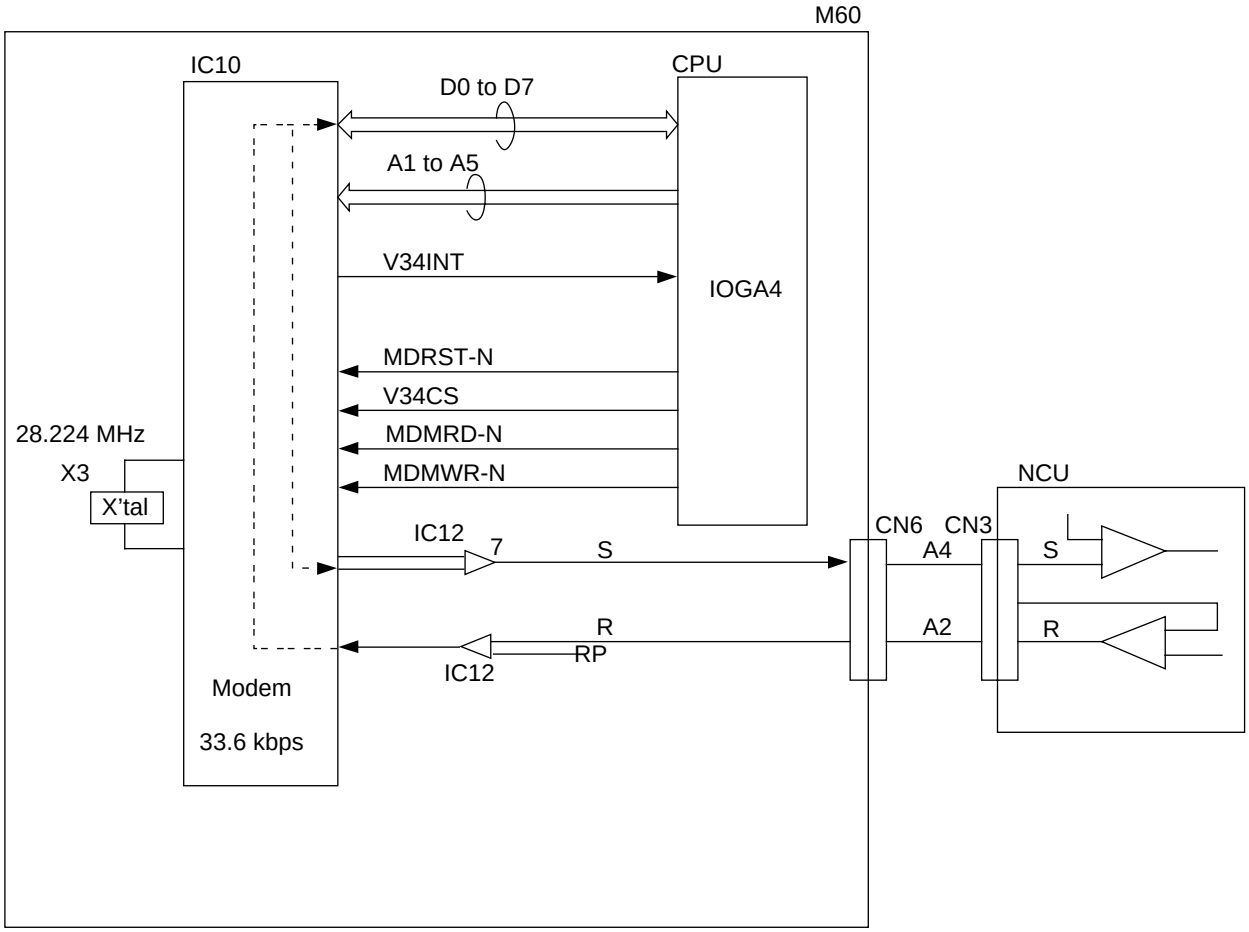

Figure 3.11 Related Signals of Modem

3.1.10 M60 Circuit Diagram (Page 10/13)

1. Block diagram
   The circuit diagram shown on page 10/13 consists of the ispLSI2032E-110LT44 (PLD: Programmable Logic Device) of IC9.

   Figure 3.12 shows the related signals of PLD.

2. Functions
   - chip select decode: V34CS and MUPISCS signals are produced from NMDCS2 and A18 signals.
   - wait control: NMDWAIT signal is produced from MUPISRDY-N signal.
   - MUPIS-WR: MUPISWR signal is produced from WRL-N and CLK signal
   - AFXN: AFXN signal is produced from AFXN-I and PLD internal control signal.
   - DACK0: DACK0-O signal is produced from DACK0-I signal.

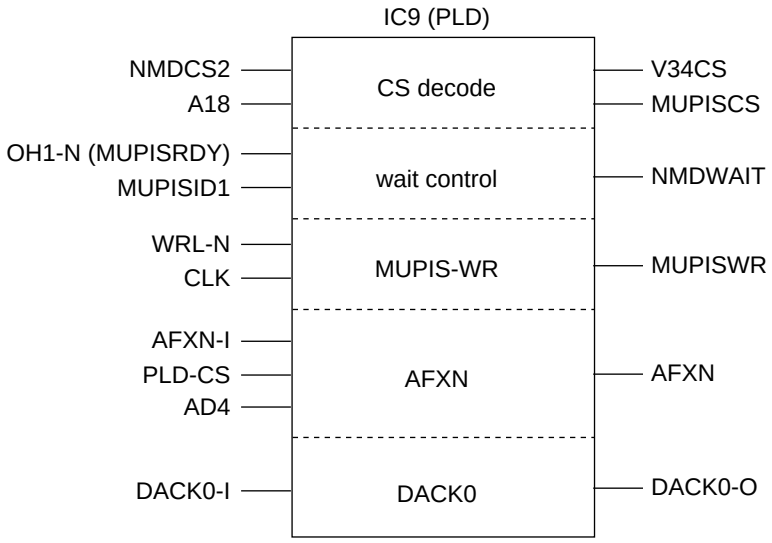

Figure 3.12 Related Signals of PLD

3. Backup circuit

A rechargeable battery connected to the MCNT board externally supplies 6V to the IC inside the MCNT board. This voltage is reduced to 5V to be supplied to the DRAM and optional add-on memory. Thus, send/received data stored in the DRAM and optional add-on memory can be retained after power-off.

When the power is turned on, the internal IC reduces the +8V and +5V supplied from low-voltage power supplies down to 5V, which is supplied to the DRAM. At the same time, +8V is supplied to the external battery for recharging.

A block diagram is shown below.

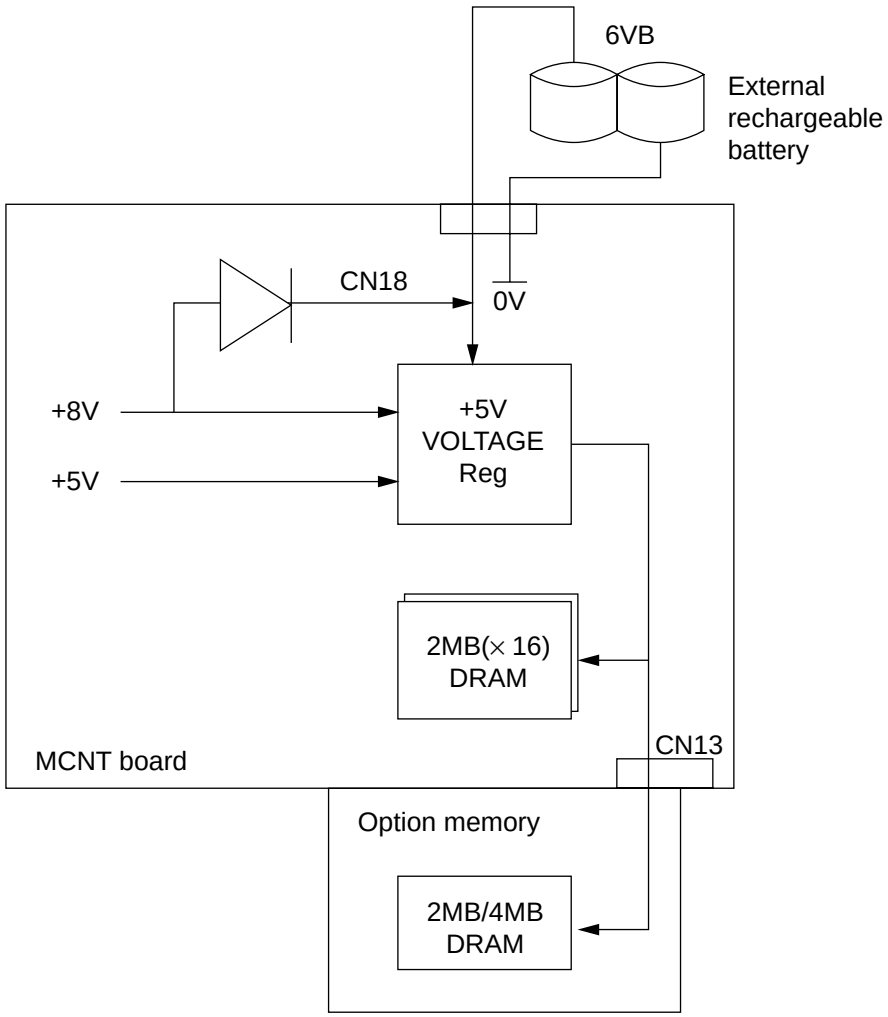

Figure 3.13 Buckup Circuit

3.1.11 M60 Circuit Diagram (Page 11/13)

1. Block diagram

   The circuit diagram shown on page 8/16 consists of the following connectors:
   - Connector CN6 that provides an interface between M60 board and NCU board.
   - Connector CN7 that provides an interface between M60 board and external electro-mechanical devices (PC1 and PC2).
   - Connector CN9 that provides an interface between M60 board and OPE (P60) unit.

   Figure 3.14 shows an interface between M60 board and NCU board.
   Figure 3.15 shows an interface between M60 board and OPE unit.
   Figure 3.16 shows the related signals of PC1 and PC2.

2. Function

   1) External status supervising interface (PC1/PC2)

      External status is detected by the photocouplers (PC1/PC2) in the mechanism and the signal is output to the input port of CPU via this interface circuit.
      - PC1: Presence of document on hopper.
        When sub-power supply is applied to the fax machine, this signal is output to OPE unit which will control the main-power supply.
      - PC2: Presense of document at scanning position.

3. Others

   NCU interface signal
   - CML : Line seizure control signal
   - DP : Dial pulse control signal
   - SR : Control signal for connection between LINE and TEL terminals
   - MUTE : Control signal for pulse dial improvement and bell shunt replay
   - PP : Relay control signal for special service code detection at parallel pickup or remote reception
   - PBXE : Control signal for connecting one of LINE terminal to the PBXE terminal
   - OH2 : Detection of off-hook of terminal connected to TEL-1 or TEL-2
   - OH1 : Output upon circuit current detection after fax line seizure
   - RP : Receiving sensistivity determination terminal
   - RI : Ringing detection signal
   - S : Send signal (picture data/protocol/tonal signals/PB tone etc.)
   - R : Received signal (picture data/protocol/tonal signals etc.)

   OPE interface signals
   - TXDOPE : This signal transmits sequencially the contents of each data of TXD (LED on/off information, etc.) to OPE in serial data from CPU.
   - RXDOPE : This signal transmits sequencially the contents of each data of RXD (key code information, etc.) to CPU in serial data from OPE.
   - OPECHK : Use to monitor the operation of the OPE unit.
   - OPERST : Reset signal for OPE unit
   - WAKEUP-N : Wakeup signal
   - PSMODE : Power Save Mode off signal from OPE.
   - MP/OFF : Main Power On/Off signal to Main Power Supply Unit.
   - MPREQ : Main Power off signal from CPU.

   G4N interface signals
   Refer to sections

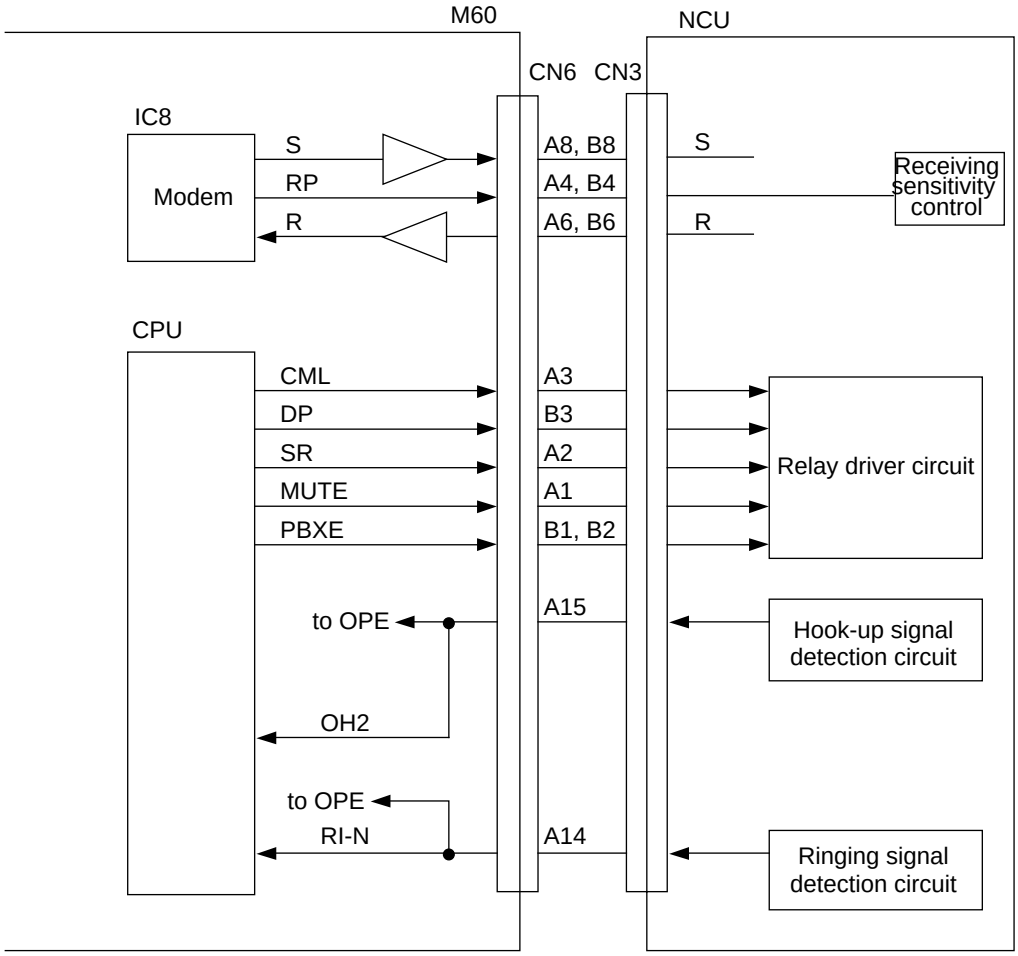

Figure 3.14 Interface between M60 Board and NCU Board

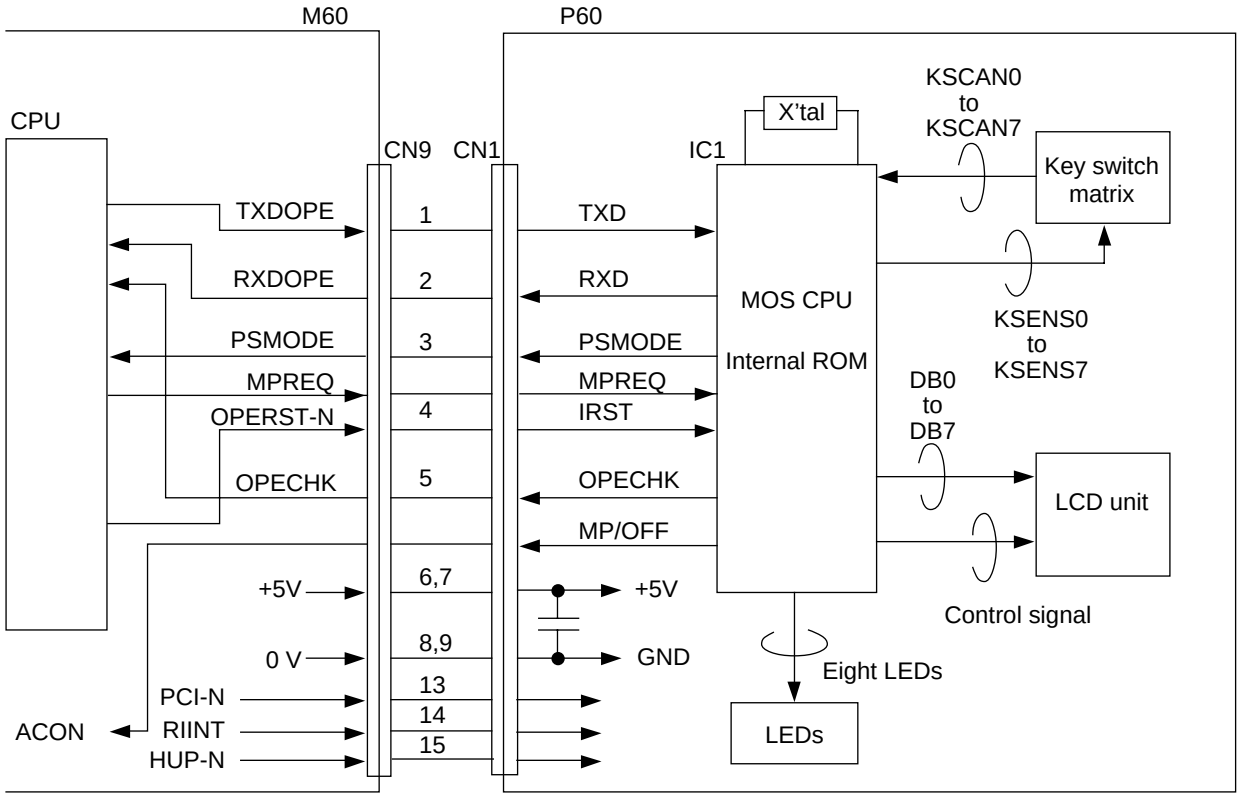

Figure 3.15 Interface between M60 Board and P60 Board (operation unit)

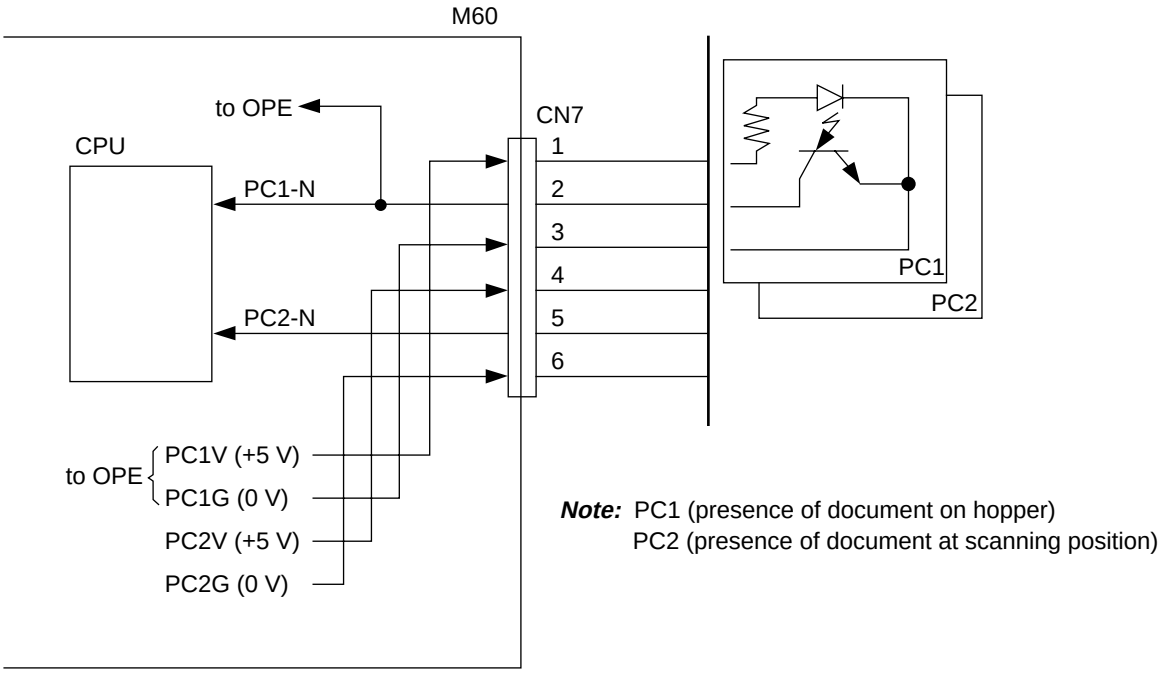

Figure 3.16 Related Signals of PC1/PC2

3.1.12 M60 Circuit Diagram (Page 12/13)

1. Block diagram
   The circuit diagram shown on page 12/13 consists of the following connector:
   - Connector CN13 that provides an interface between M60 board and optional memory board.
   - Connector CN12 that provides an interface between M60 board and CTT (PC interface) board.

   Figure 3.17 shows the interface between M60 and memory board.
   Figure 3.18 shows the interface between M60 and PC interface board.

   Note : 2 Mbyte or 4 Mbyte memory board can be added to the memory capacity.

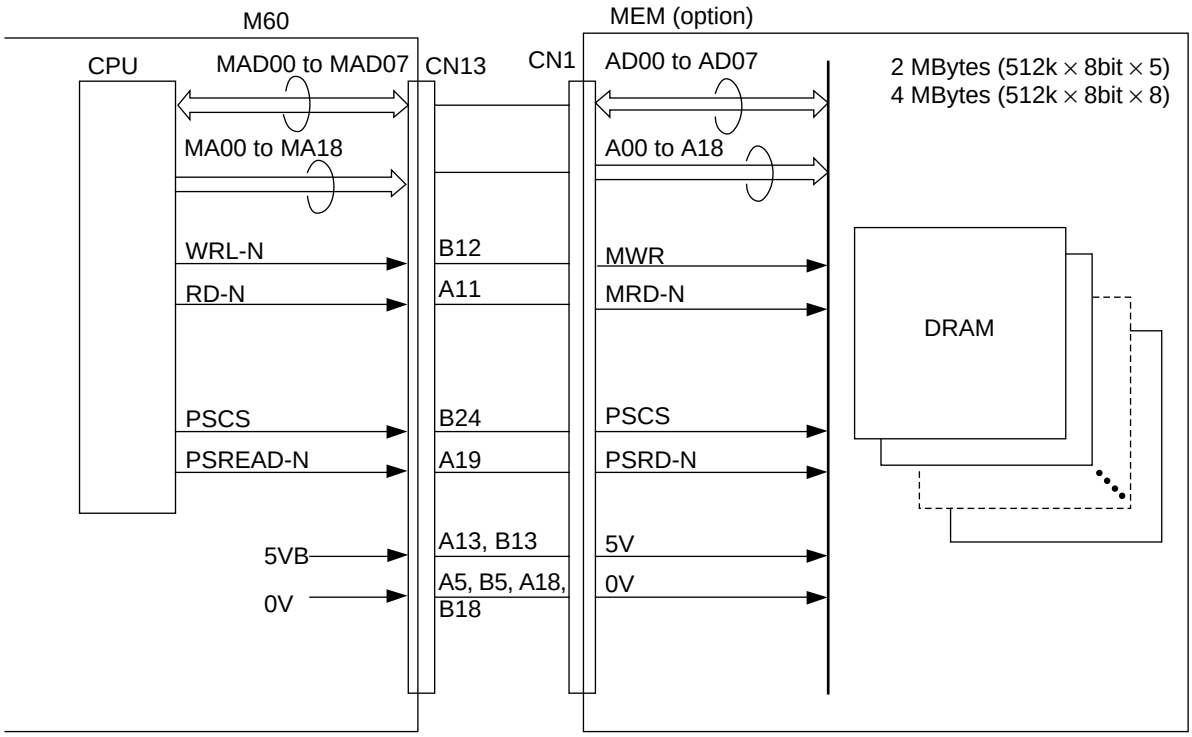

Figure 3.17 Interface between M60 Board and Memory Board (option)

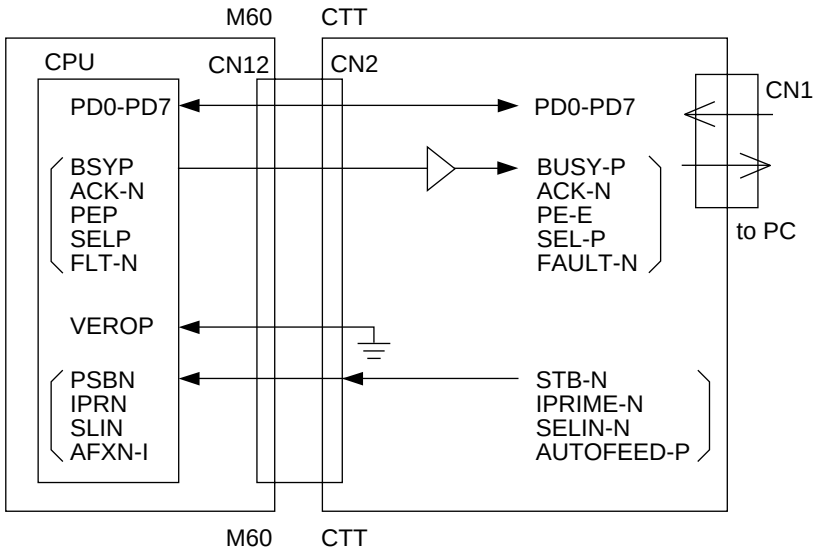

Figure 3.18 Interface between M60 Board and CTR Board (PC interface unit)

3.1.13 M60 Circuit Diagram (Page 13/13)

1. Block diagram
   The circuit diagram shown on page 13/13 consists of the following connector:
   - Connector CN1 that provides an interface between M60 board and main power supply unit.

2. Function
   1) Sensors and switch control
      Six types of sensors are used in the printer as listed below. All of their output enter CPU ports for referring to and processing by the CPU.
      Figure 3.19 shows sensors and switch control.

      - Inlet sensor 1 and 2
      - Write sensor (To detect the paper top position for printing)
      - Outlet sensor
      - Paper end sensor
      - Toner end sensor
      - Cover status switch

      The functions of various sensors are described in the following table.

Sensor Type	Sensor Name	Function
PSIN-N PSIN2-N	Inlet sensor Inlet sensor 2	This photosensor is positioned before the resist roller to detect whether the paper has entered into the printer section.
WRSNS-N	Write sensor	Detects the arrival of paper at designated position on the paper transport route inside the printer in order to turn on the light of the LED head. 0: Paper exists, 1: Paper does not exist
PSOUT-N	Outlet sensor	Located at the exit of the printer to supervise the paper exit operation. 0: Paper exists, 1: Paper does not exist
PAPER-N	Paper sensor	Detects the presence of paper in the paper cassette. 0: Paper exists, 1: Paper does not exist
TNRSNS-N	Toner sensor	Detects the remaining toner in the toner cartrige. "The length of time of low-toner state within fixed time interval" detects a low-toner state.
CVOPN-N	Cover open sensor	Detects whether the cover of the printer section is open or not. 0: Cover is open, 1: Cover is close

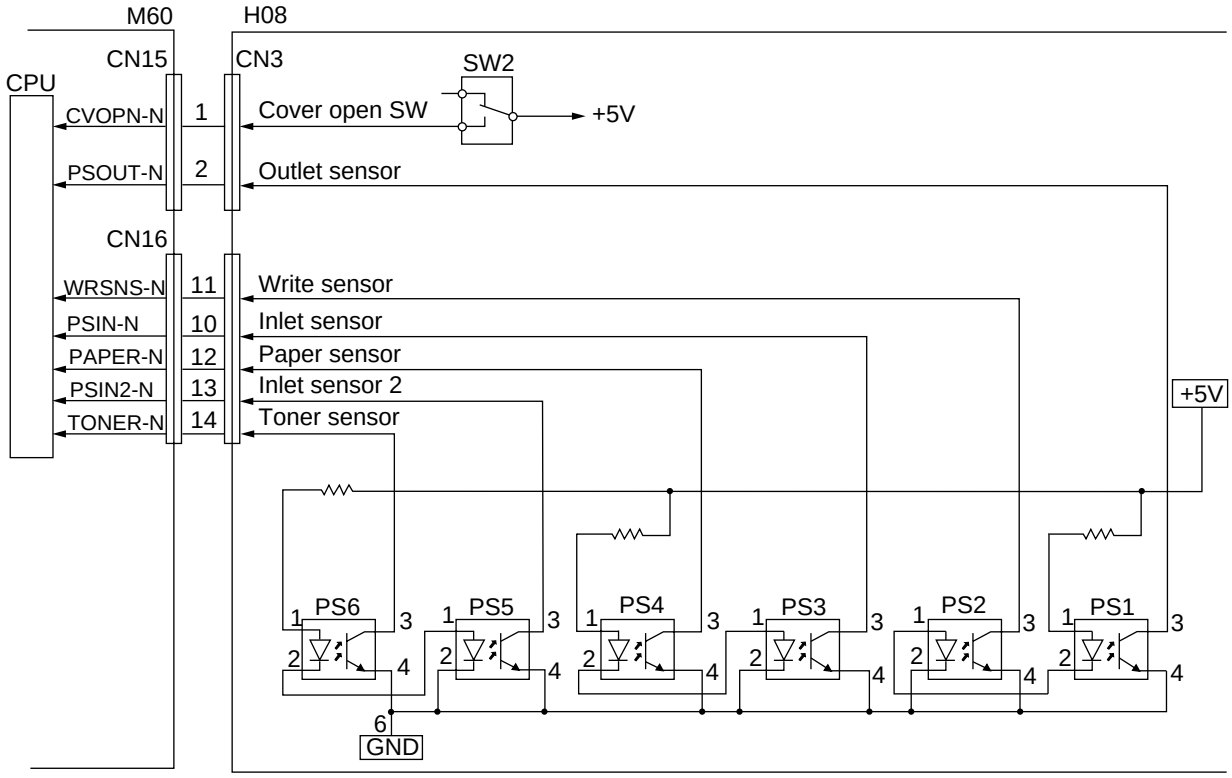

Figure 3.19 Sensors and Switch Control

2) Fuser unit temperature control

The heater in the fuser unit is controlled by the thermister, CPU to keep the heater roller surface within a prescribed temperature range. The CPU supervises the status of the port THCHK periodically, turning HEATON signal on and off according to CPU of THCHK (A/D converter input section) status to exercise temperature control.

At power on time, the CPU switches the output signal THON from pin 59 (between high and low states) to check for a blown or shorted thermister according to the status of the THCHK signal.

A built-in thermostat in the fuser unit prevents the heater from being overheated in event of failures in the thermister, or temperature control circuit, etc.

Figure 3.20 shows the fuser unit temperature control.

Note: Heater control

Temperature of the heater at the time of printing is 150 ½C to 180 ½C. This temperature is maintained by controlling the on and off operation of heater according to the input of the thermister converted into analogue-digital (A/D) values by the CPU.

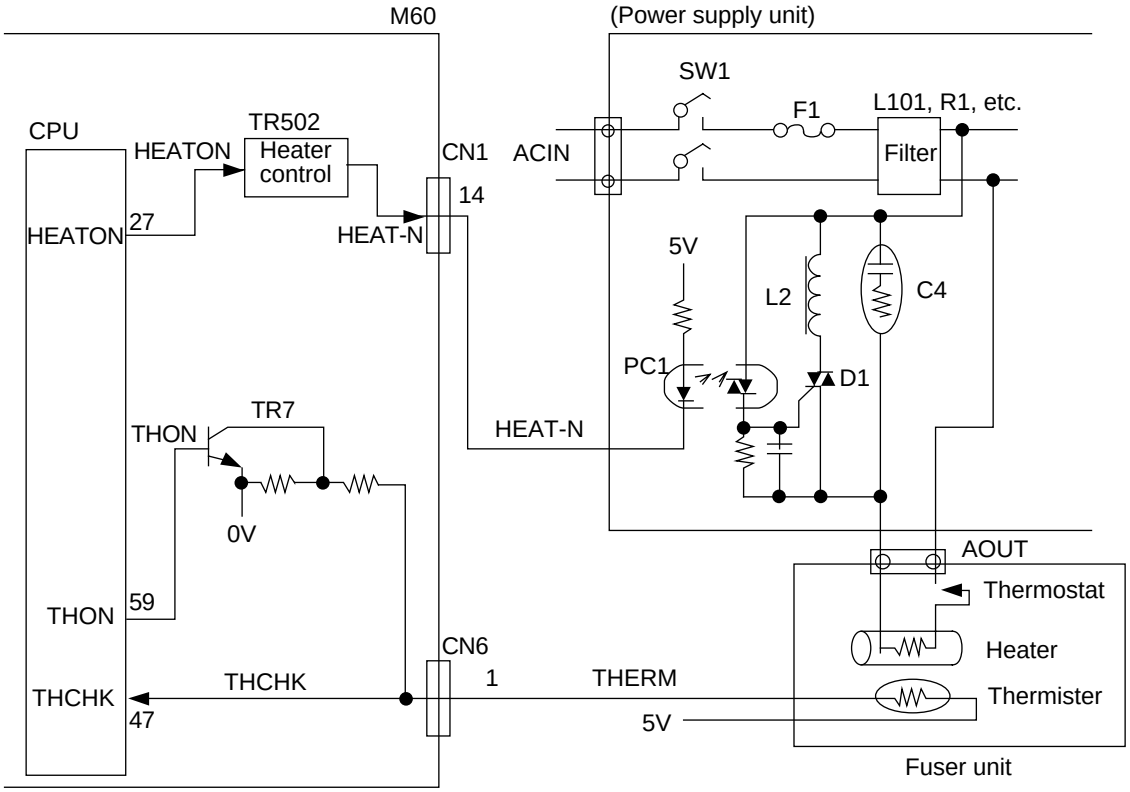

Figure 3.20 Fuser Unit Temperature Control

3) High-voltage and medium-voltage control

High voltages are activated by CPU and generated by the high-voltage circuit inside the power supply unit. The CH (charge) voltage of about -1.35 kV is used for the charge roller. The TR1/TR2 (transfer) voltage of about +3.5 kV/-0.75 kV is used for the transfer roller.

Medium voltages are activated by CPU and generated by the medium-voltage circuit inside the power supply unit. The SB1/SB2 (toner supply) voltage of about +0 V/-450 V is used for the toner supply roller. The DB1/DB2 (developping) voltage of about +300 V/-300 V is used for the developing roller. The CB (cleaning) voltage of about +400V is used for the cleaning roller.

Figure 3.21 shows high/medium voltages control.

* Signals used to control the high/medium-voltages are listed below.

Signal Name	Description
CHPWM	P.W.M : CH is output.
DB1ENB	"1": + ive polarity voltage of DB1/SB1 is output.
DB2ENB	"1": - ive polarity voltage of DB2/SB2/CB is output.
TR1PWM	P.W.M : TR1 is output.
TR2PWM	P.W.M : TR2 is output.
DBPWM	P.W.M : DB/SB/CB is output.

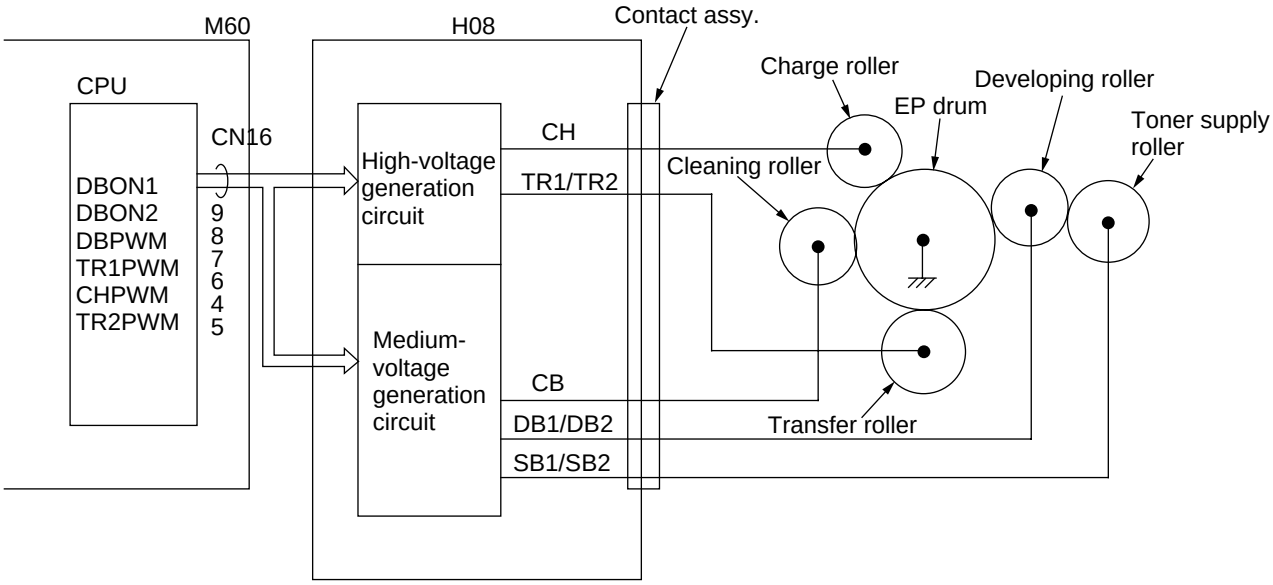

Figure 3.21 High/Medium Voltage Control

3.2 OPE (P60) Circuit Diagram

1. Block diagram
   Figure 3.22 shows a block diagram of OPE (P60).

   The P60 (operation unit) circuit consists of the following blocks:

   1) IC1 (one chip MOS-CPU)
      - Output ports
        Setting LEDs on and off: 8 ports
        Specifies the row during key switch matrix scanning: 8 ports
      - Input ports
        Detect the column whose key is pressed: 8 ports

   2) Key switch matrix (8 rows ∞ 8 columns)

   3) LEDs (8 LEDs)

   4) LCD unit

2. Key switch scanning
   Output ports (KSCAN0 to KSCAN7 signal) corresponding to 8 rows of key matrix are scanned sequentially by the software. In the case 1 is any of output from KSCAN0 to KSCAN7 signal which corresponds to the row 8 in the block diagram, the software reads input port, KSENS0 to KSENS7, and determines which in the row 8 is pressed.

3. LED drives and LEDs
   Eight LEDs (ALARM, PHOTO, LIGHT, etc.) on the control panel are driven by output of IC1 via resistors R501, R508-R514 respectively. An LED lights on when a port output is 1.

4. In case sub-power supply is applied to the fax machine: when PC1-N, HUP-N or RIINT signal is input to OPE unit, OPE unit controls the main power supply (TLHV board) by outputting the MP/OFF (ACON) signal.

   - PC1-N : Presence of document on hopper
   - HUP-N : OFF-Hook detection for TEL 1 and TEL 2 terminal
   - RIIN : Ringing detection signal

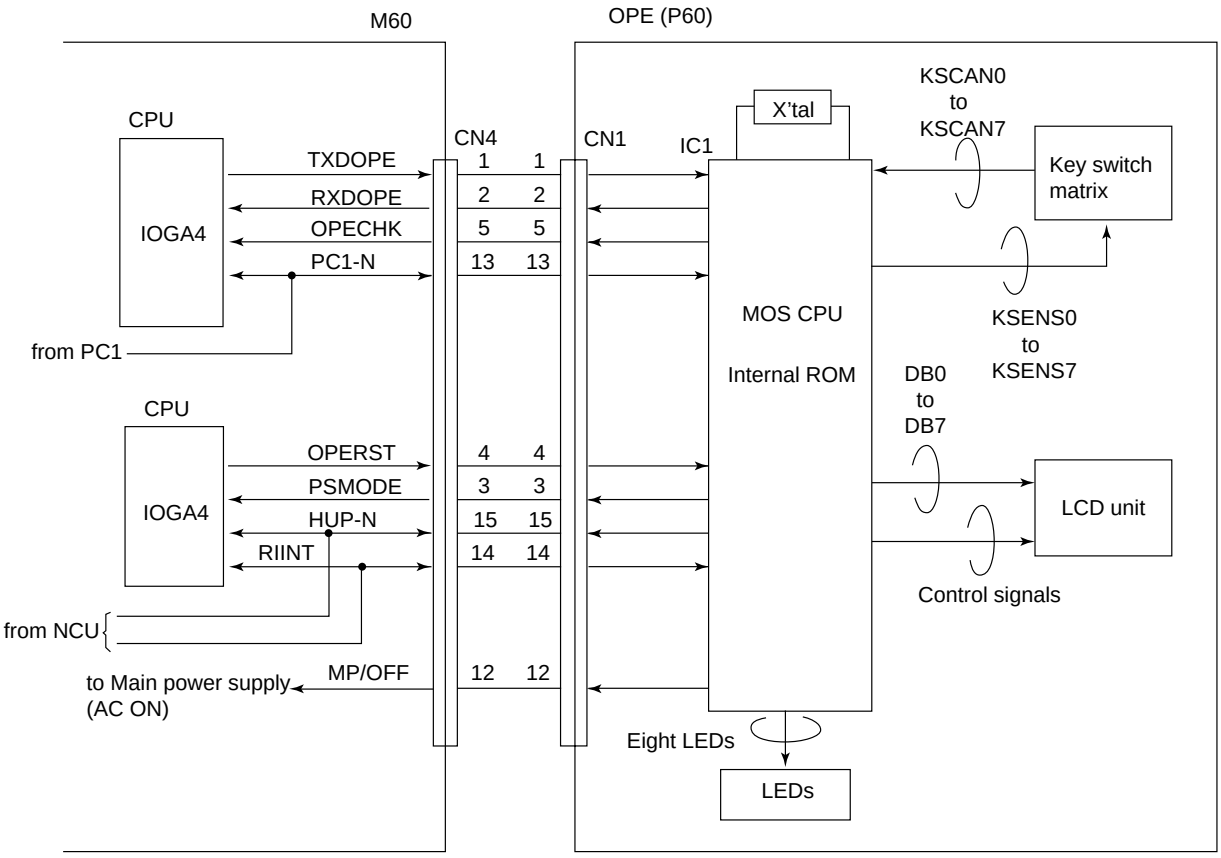

Figure 3.22 Block Diagram of OPE (operation unit)

3.3 EN9 and INU Circuit Diagram

The NCU board is selected from EN9 and INU because it differs depending on country's specifications.

- EN9
  UK, Flance, EC countries
- INU
  US, Canada, Australia, New Zealand, Singapore, China, Malaysia,
  non-EC countries (Poland etc.)

1. Block diagram
   - Figure 3.23 shows a block diagram of EN9 circuit.
   - Figure 3.24 shows a block diagram of INU circuit.

2. General functions of this circuit are as follows:
   1) Generates and detects signals to be exchanged with a telephone exchange or network in Phases A defined by ITU T.30.
      - Loop formation for call origination
      - Line current detection (see note 1) before call origination
      - Dial tone detection (see note 1)
      - Generation of dial pulses (see note 2)
      - Busy tone detection (see note 1)
      - Ringing signal detection

   2) Sends various data and signals from the 46F board to the telephone line after amplification.
      - Picture data/Protocol/Tonal signals/MF tone, etc.

      Note1: This procedure may be omitted depending on the dial parameters.
      2: MF (Multi-frequency) tone is generated by the modem and transferred to the telephone line via the NCU board.

3. Explanation on CN3 Terminals

CN3 pin No.	Terminal name	Explanation	EN9	INU
36	OH2	Detection of off-hook of terminal connected to TEL-1 or TEL-2.		
40	RI	0 - 5 V signal output synchronized with the ringing signal frequency		
24	PP	Relay control signal for special service code detection at parallel pickup or remote reception		
13, 14, 41, 42	GND	Ground		
37, 38	sub + 5 V	Sub power supply for OH2 and RI detection		
33, 34	+ 5 V	Power supply for relays and logic circuits		
43	+ 5 VA	+5 V power supply for analog circuit		*
44	S	TX Signal		
45	– 5 VA	– 5 V power supply for analog circuit		*
48	R	RX Signal		
46, 47, 49	SG	Signal ground		
50	Rp	Receiving sensitivity determination terminal		
22	DP	Pulse dial control signal		
20	CML	Line seizure control signal		
30	F. ICC	Loop current control signal upon line seizure		*
28	SR	Control signal for connection between LINE and TEL terminals		
18	MUTE	Control signal for pulse dial improvement and bell shunt relay		

Note : Unused.

4. EN9 circuit diagram

1 Lightning arresters (AR1, 2)
The nominal operating voltage is 500 V.
When connecting the ground of the arrestor to the chassis, tighten ARG on the PCB with a screw. At this time, the PCB is grounded through the power cable.
The TB1 arrestor ground terminal can also be used to connect to the earth directly.

3 Diode bridge (DB1)
This circuit rectifies the loop current so that the DC circuit characteristics are not affected by a polarity change over the line.

4 DC circuits (Q1, R506, R507, C4, R602)
These circuits provide DC characteristics according to the line requirements.

5 Impedance matching network (R510, R512, C502)
This circuit matches the impedance between the line and equipment to reduce reflection of transmitted signals.

6 Receiving sensitivity (R517, R518, C520)
The receiving sensitivity at line hunting is determined by R518, C520 and the MF tone receiving sensitivity at parallel pickup is determined by R518, C520, R517.

7 CML (RL1)
This circuit selectively switches the line between the telephone or facsimile.

8 SR (RL2)
This circuit connects the line with the telephone. During facsimile transmission, it disconnects the telephone.

9 DP (IC2)
This circuit generates pulse dial signals.

) MUTE (IC3)
During pulse dialing, this circuit closes to reduce the DC loop resistance.

Ⓐ PP (RL6)
When it detects MF or CNG tones without seizuring a line, it disconnects NT (5) to increase the input impedance and also sets the receiving sensitivity.

Ⓑ MUTE (RL3)
During pulse dialing, this circuit opens to prevent pulse distortion caused by capacitor C7.
When it detects MF or CNG tones without seizuring a line, it opens to increase the impedance.

Ⓒ Pickup RC (R505, C5)
These circuits insert a high-impedance resistor and capacitor serially to prevent the line impedance from dropping by the line transformer T1.

Ⓓ Ring detectors (IC1)
These circuits detect a ring signal arriving to the line. If the input ring signal exceeds a specific voltage, the circuits output a signal of RI having the same frequency as the incoming RI.

Ⓔ Line transformer (T1)
This circuit processes send/receive signals required for facsimile transmission, dial tone receive signals required for automatic dialing, and MF tone send and remote receive signals. It separates between the line and equipment in terms of DC and also keeps a balance between the line and the ground.

Ⓕ Off-hook detectors (IC8, RL7)
These circuits detect the off-hook state of the telephone connected to the TEL1, TEL2, through LINE terminals. IC8 uses a high detection sensitivity than of RL7. In TEL/FAX mode, the higher sensitive IC8 is used to detect the off-hook state of the telephone while the main equipment is hunting a line.
Usually, IC8 is short-circuited by the CML relay (7) in the standby state and RL7 is used for off-hook detection.

Ⓠ FICC (IC4)
This circuits reduces the DC resistance to increase the loop current momentarily to assure operation of the switch at line seizuring.

Ⓡ Constant current circuits (Q502 and Q503)
These circuits provide DC characteristics according to the TBR-21 requirement.

Ⓢ Shunt (RL9)
This circuit prevents bell resonances in the telephone sets connected in parallel during pulse dialing and also reduces distortions of the pulse waveform.

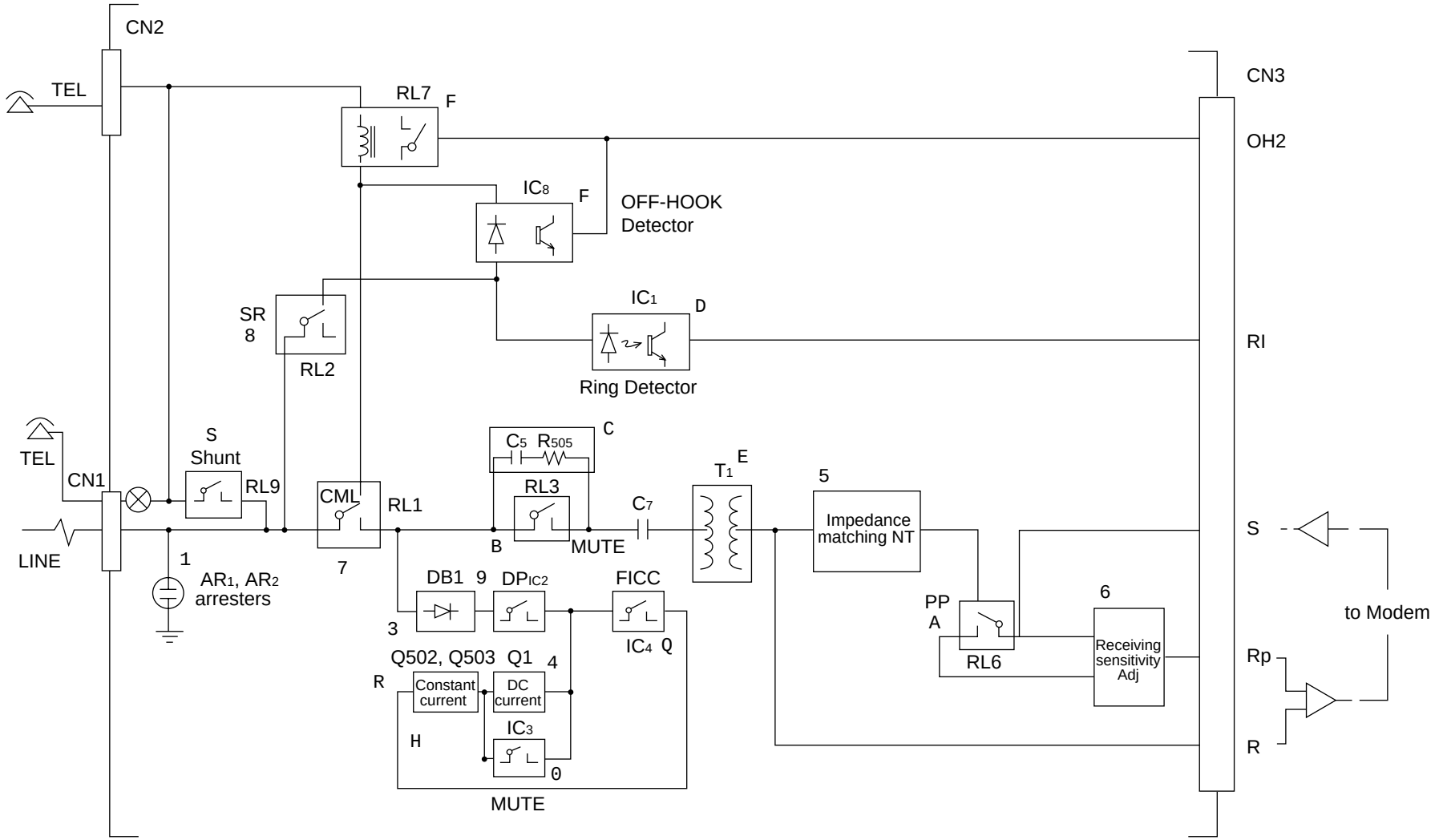

Figure 3.23 Block Diagram of EN9

5. INU circuit diagram

1 Lightning arresters (AR1, 2)
The nominal operating voltage is 500 V.
When connecting the ground of the arrestor to the chassis, tighten ARG on the PCB with a screw. At this time, the PCB is grounded through the power cable.
The TB1 arrestor ground terminal can also be used to connect to the earth directly.

3 Diode bridge (DB1)
This circuit rectifies the loop current so that the DC circuit characteristics are not affected by a polarity change over the line.

4 DC circuits (Q1, R506, R507, C4, R602)
These circuits provide DC characteristics according to the line requirements.

5 Impedance matching network (R544, C513, R545, R510, C502, R512, R511, C503, R513)
This circuit matches the impedance between the line and equipment to reduce reflection of transmitted signals.
It provides impedance (return loss) characteristics to meet the line requirement using the connector keys (CN15 to CN35).

6 Receiving sensitivity (R516, R515, R543, R519, R520, R546)
The receiving sensitivity at line hunting is determined by R519, R520, R546 depending on the line impedance. Similarly, the MF tone receiving sensitivity at parallel pickup is determined by R516, R515, R543, R519, R520, R546. The receiving sensitivity is set using connector keys (CN15 to CN35).

7 CML (RL1)
This circuit selectively switches the line between the telephone or facsimile.

8 SR (RL2)
This circuit connects the line with the telephone. During facsimile transmission, it disconnects the telephone.

9 DP (IC2)
This circuit generates pulse dial signals.

) MUTE (IC3)
During pulse dialing, this circuit closes to reduce the DC loop resistance.

Ⓐ PP (RL6)
If this circuits detects MF or CNG tones without seizuring a line, it disconnects Impedance matching Net work (5) to increase the input impedance and also sets the receiving sensitivity.

Ⓑ MUTE (RL3)
During pulse dialing, this circuit opens to prevent pulse distortion caused by capacitor C7.
If it detects MF or CNG tones without seizuring a line, it opens to increase the impedance.

Ⓒ Pickup RC (R505, C5)
These circuits insert a high-impedance resistor and capacitor serially to prevent the line impedance from dropping by the line transformer T1.

Ⓓ Ring detectors (IC1)
These circuits detect a ring signal arriving to the line. If the input ring signal exceeds a specific voltage, the circuits output a signal of RI having the same frequency as incoming RI.

Ⓔ Line transformer (T1)
This circuit processes send/receive signals required for facsimile transmission, dial tone receive signals required for automatic dialing, and MF tone send and remote receive signals. It separates between the line and equipment in terms of DC and also keeps a balance between the line and the ground.

Ⓕ Off-hook detectors (IC5)
These circuits detect the off-hook state of the telephone connected to the TEL.

Ⓖ Impedance switches (CN15 to CN35)
These circuits set the impedance according to the line requirement.
220: 220 ohm + 820 ohm//115 nF (CN15)
370: 370 ohm + 620 ohm//310 nF (CN35)
600: 600 ohm (CN25)

Ⓘ Ring impedance switches (S1-1, 2)
These switches set the ring impedance according to the line requirement.

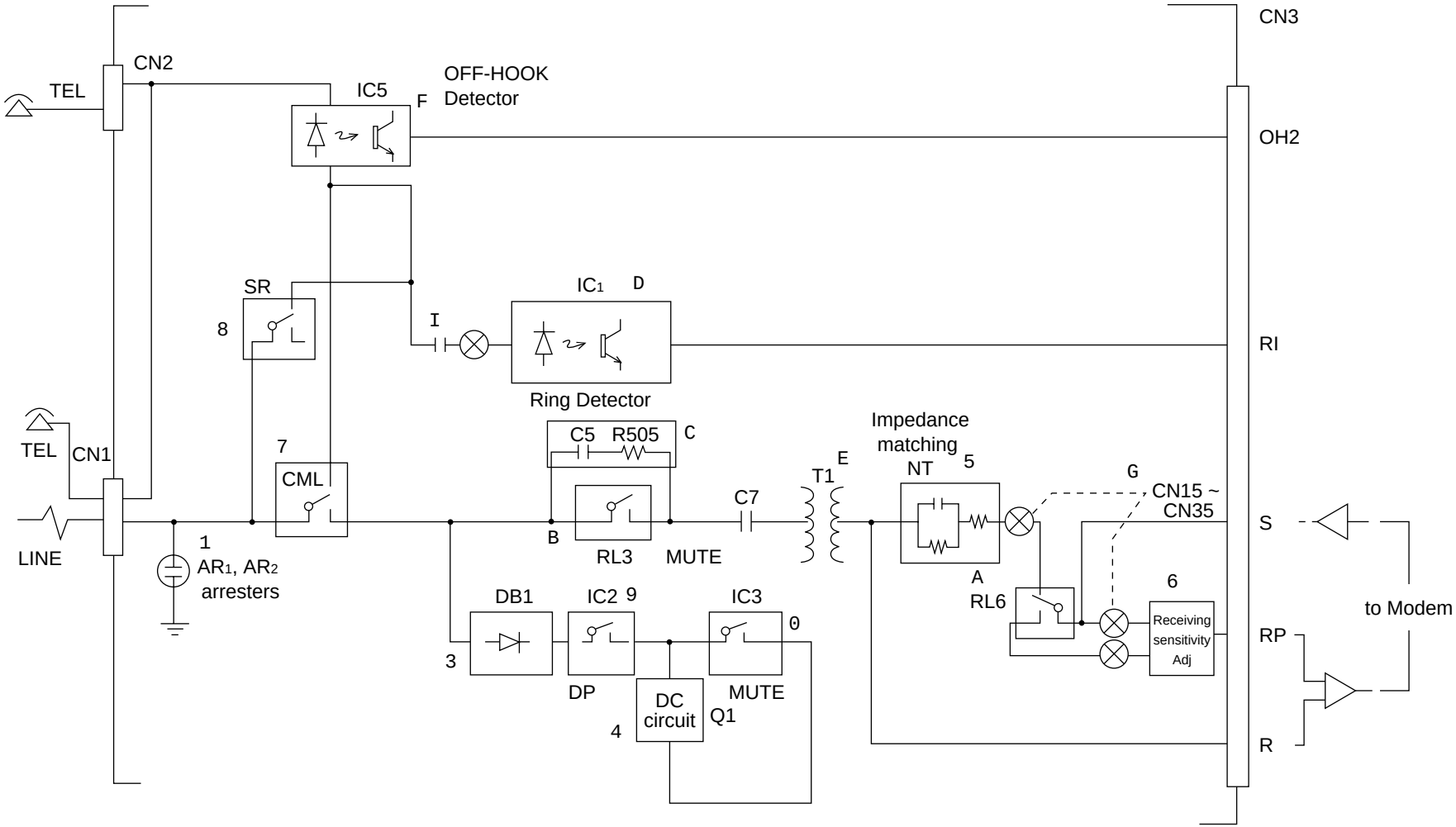

Figure 3.24 Block Diagram of INU

6. Outline of Parallel Pick Up

Parallel pick up is a function that controls a fax (to make a fax in receive mode) from a telephone set connected parallel to a fax. The two possible parallel connections of telephone sets A and B are shown in the figure.

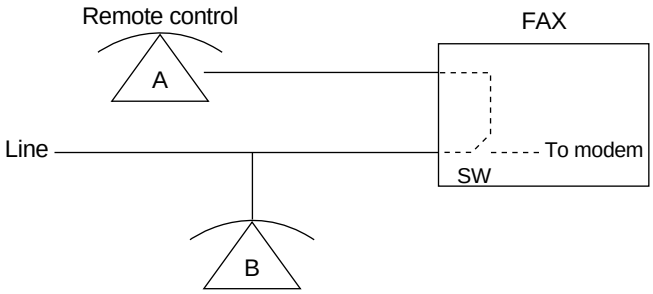

Remote control: To control a fax from telephone set A.
Parallel Pick UP (PP): To control a fax from telephone set B.

- Why a PP function is needed!
  As shown in the following block diagram, telephone sets B, A and A" are connected to a telephone line.
  Since A and A" are connected to the line via fax, off-hook status of any of the telephone sets can be detected by the OFF-HOOK Detector F in the block diagram. However, off-hook status of telephone set B cannot be detected by the fax side.
- PP Control
  When a normal ring arrives at the fax from the line, the CML 7 turns on resulting in the formation of an AC loop via circuit C. The AC loop makes it possible for the modem to detect the AC signals. If a user hooks up telephone set B after the first ring and enters the MF 2-digit special code in order to make the fax in the receive mode, then it becomes possible to detect the MF signals along that route.

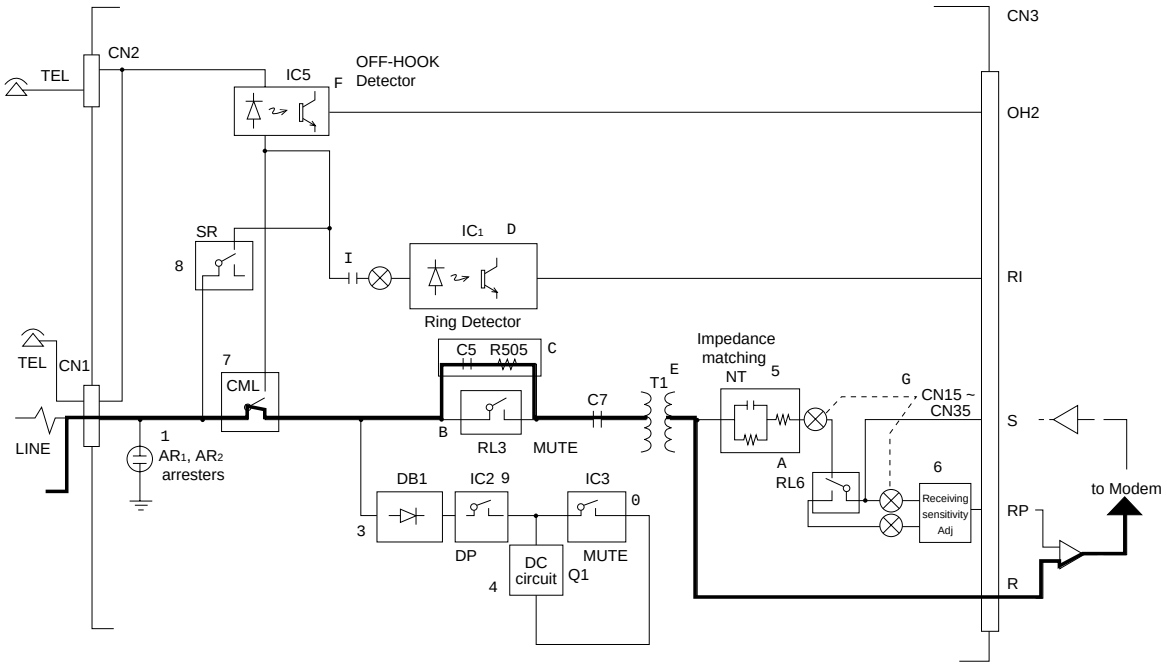

Figure 3.25 Block diagram for Parallel Pick Up Path

3.4 Power Supply Board

Caution:
- Voltage charged in the capacitor may cause shock hazards. After turning on the AC power, never touch the pattern on the power supply board.
- For maintenance, Oki Data Corporation recommendes replacement of Power supply board (Both high voltage power supply board and Low voltage power supply board), but not repair of the boards.
  Any purchase orders for components of the power supply board are not accepted. Any trouble on power supply board that was repaired at your side once is not guaranteed.

1. Low voltage power supply board
   MPW1561: 120V
   MPW1461: 230V

   (1) Specifications

   AC power input range:

	Input voltage	Frequency
MPW1561	120V (-15%, +6%)	50Hz/60Hz (+/-2%)
MPW1461	230V (-14%, +15%)	50Hz/60Hz (+/-2%)

Note: Onlythe MPW1461 conforms to the radio-frequency interference requlations and has a power saving feature.

Output range:

Connector/Pin No.	Normal output Voltage	Voltage range	Normal output Current	Load alteration range
CN003/Pin 7,8	+5V	+/-4%	2.0A	0.4 - 2.0A
CN003/Pin 1,2	+30V	26 - 45V	1.04A	0 - 1.34A
CN003/Pin 10	+8V	+/-4%	0.2A	0 - 0.2A
CN003/Pin 11	-8V	+/-4%	0.2A	0 - 0.2A
CN003/Pin 15	+24V	23 - 25V	0.4A	0 - 0.4A
*CN003/Pin 12	+5Vs	+/-4%	20mA	15m - 50mA

Note: The MPW1561 does not supply +5Vs from CN003/Pin 12 because it is used in the power save mode.

Protection against overvoltage/overcurrent

+5Vs/+5V: The protection should be open with Fuse (F501) and shorted with D503. And sometime D202, D203 should be shorted.
+30V: This unit's O.C.P. is drooping characteristic type. (O.C.P. TIME: MAX 10S) The protection should be shorted with Q201.
+8V: Overcurrent protection circuit operation
-8V: Overcurrent protection circuit operation
+24V: Overcurrent protection circuit operation

(2) Block Diagram

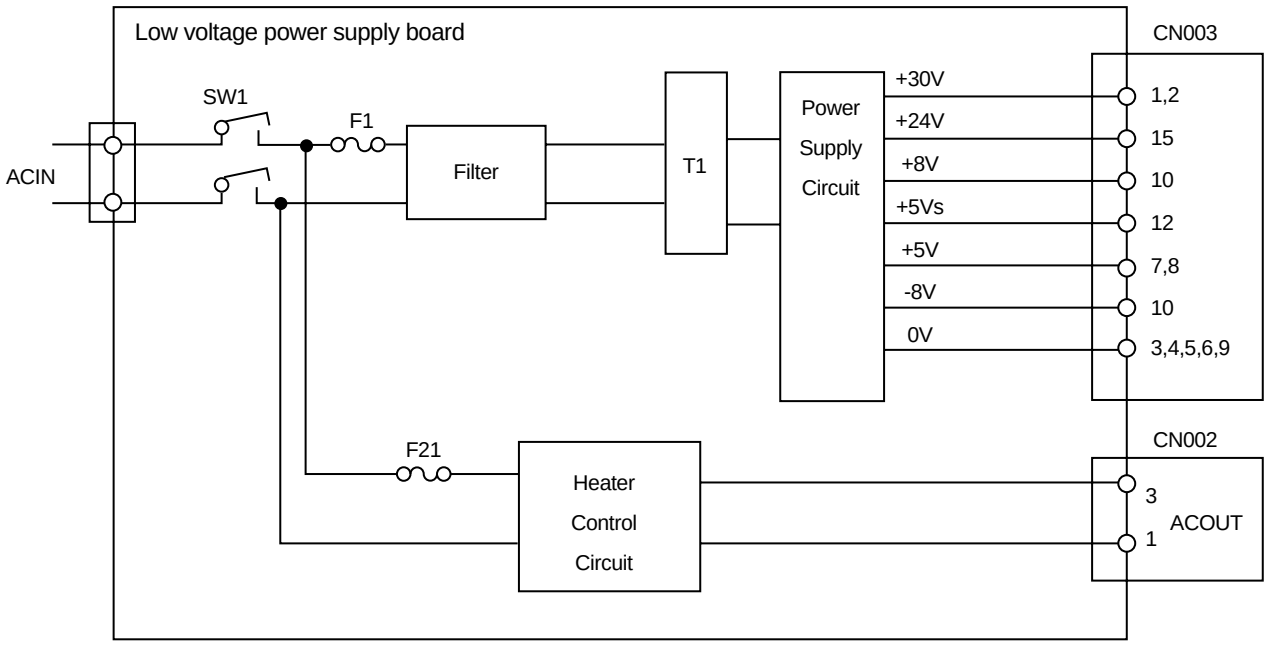

3.5 High-Voltage Power Supply Circuit (H08)

3.5.1 Functional overview

The high-voltage outputs consist of TR1 (3.5 kV), TR2 (-0.75 kV), DB1 (+300 V), DB2 (-300 V), SB2 (-450V), CB (+400 V) and CH (-1.35 kV) and are obtained as follows. The control signal obtained from CPU of E17 board is applied to High-voltage power supply circuit. As result, the driver current is applied to the drive circuit, which will provide the high-voltage outputs.

Note:

Signal Name	Output Voltage	Application
SB1/SB2	0±5V/-450V	Voltage applied to toner supply roller.
DB1/DB2	+300V/-300V	Voltage applied to developing roller.
TR1/TR2	+3.5 kV/-0.75 kV	Voltage applied to transfer roller.
CH	-1.35kV	Voltage applied to charging roller.
CB	+400V	Voltage applied to cleaning roller.

3.5.2 SB2, DB1, DB2 and CB

1) These four high-voltage outputs are obtained from the flyback voltage of Q10.

2) The positive and negative voltages of DB1 and DB2 are obtained by switching the charging direction under the triac and thyristor.

3) Feedback is not applied to these outputs. However, SB2 is limited by D85 and DB2 is limited by D84 so as not to provide an output exceeding a preset voltage.

3.5.3 TR1 and TR2

1) The TR1 high-voltage is obtained by rectifying the secondary output of Q17 switching circuit by a voltage-doubler rectifier.

2) TR1 output circuit has both constant current (hereinafter called CC) and constant voltage (hereinafter called CV) modes.

3) At first, TR1 output circuit operates in the CC mode. Once the voltage determined by parameters such as roller and medium is obtained, this circuit changes to operate in the CV mode by the control signal.

4) The TR2 output voltage is regulated by keeping the voltage obtained by switching operation of Q15 at a constant voltage by D66 and D65.

3.5.4 CH

1) The CH output voltage is stabilized by keeping the primary flyback voltage obtained by switching operation of Q16 at a constant voltage by D76 and D82.

3.5.5 Photosensors

The photosensors mounted on this circuit board/sensor board supervise the paper running state during printing. These six photosensors are used in this printer as listed below. All of their outputs enter CPU for referring to and processing by the CPU.

1) PS1 (photosensor 1): PSOUT
Supervises the paper feed according to the time of arrival at the sensor and the time of passage of paper.

2) PS2 (photosensor 2): WRSNS
Detects the leading part of sensor.
Supervises the paper running state.

3) PS3 (photosensor 3): PSIN1
Detects the leading part of the paper and gives the supervision timing for switching from hopping operation to feeding operation. Supervises the paper running state and the paper size according to the paper arrival time and running time.

4) PS4 (photosensor 4): PAPER
Detects the end of the paper.

5) PS5 (photosensor 5): PSIN2
Not used.

6) PS6 (photosensor 6): TONER
Detects the lack of the toner.

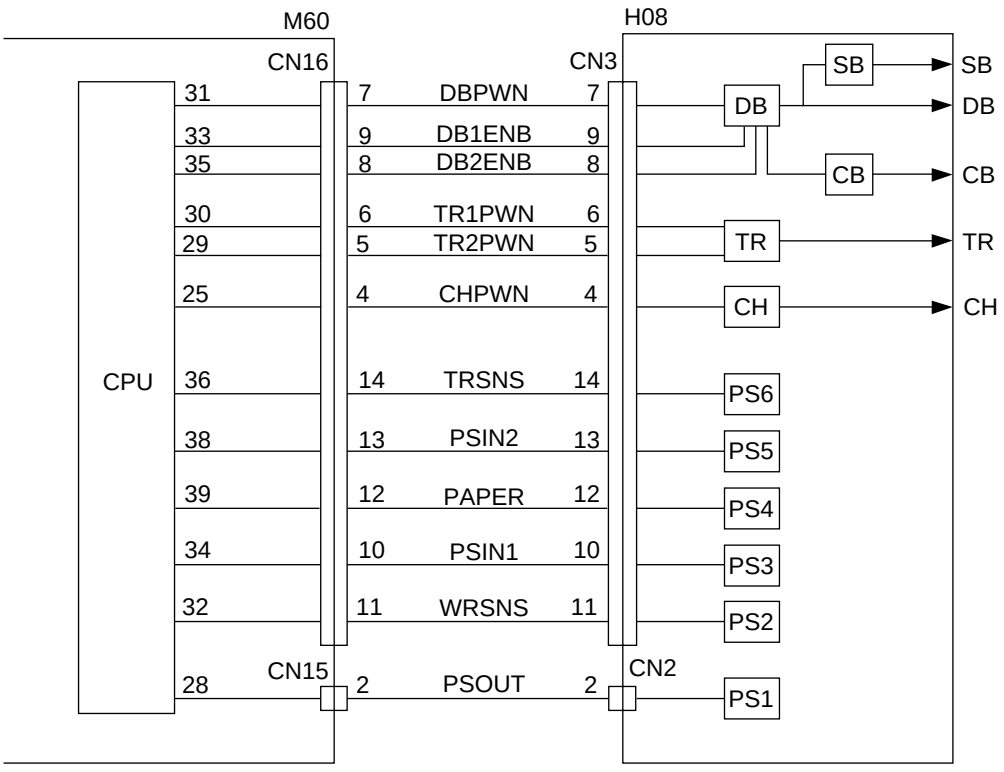

3.6 MEMO (memory) Circuit Diagram (option)

By mounting this optional memory board (MEM), it can be used for the expansion memory.

1. Block diagram
   Figure 3.26 shows a related signal of memory board.

   Memory board circuit consists of the following block.

   1) 512 kbyte MOS Dynamic RAM ∞ 8 (IC2 to IC9).
      Used as follows:
      - Picture memory for the ECM send/receive modes.
      - Picture memory for the memory transmission mode.
      - Picture memory for the retransmission data.
      - Picture memory for the reception in memory

   2) Memory capacity
      - 2 Mbyte (512 k ∞ 8 bit ∞ 5) memory board can be added for OKIFAX 5650.
      - 4 Mbyte (512 k ∞ 8 bit ∞ 8) memory board can be added for OKIFAX 5650.

      The relationship between memory capacity and mounted boards are shown in the following table.

Memory Capacity	IC2	IC3	IC4	IC5	IC6	IC7	IC8	IC9
2 Mbyte	◯	◯	◯	◯	◯	×	×	×
4 Mbyte	◯	◯	◯	◯	◯	◯	◯	◯

◯ : mounted

× : not mounted

Note: Back-up time on eleCTTical interruption; Min. one hour.

3) Image memory capacity

	Memory Condition	A4 Setting [pages]	LEGAL Setting [pages]
With Option Board	Standard (without option)	187	179
	Add the 2 Mbyte	374	358
	Add the 4 Mbyte	561	478

Note: No. of sheets are counted provided that ITU-T No.1 sample document is used.
No. of sheets are typical value.

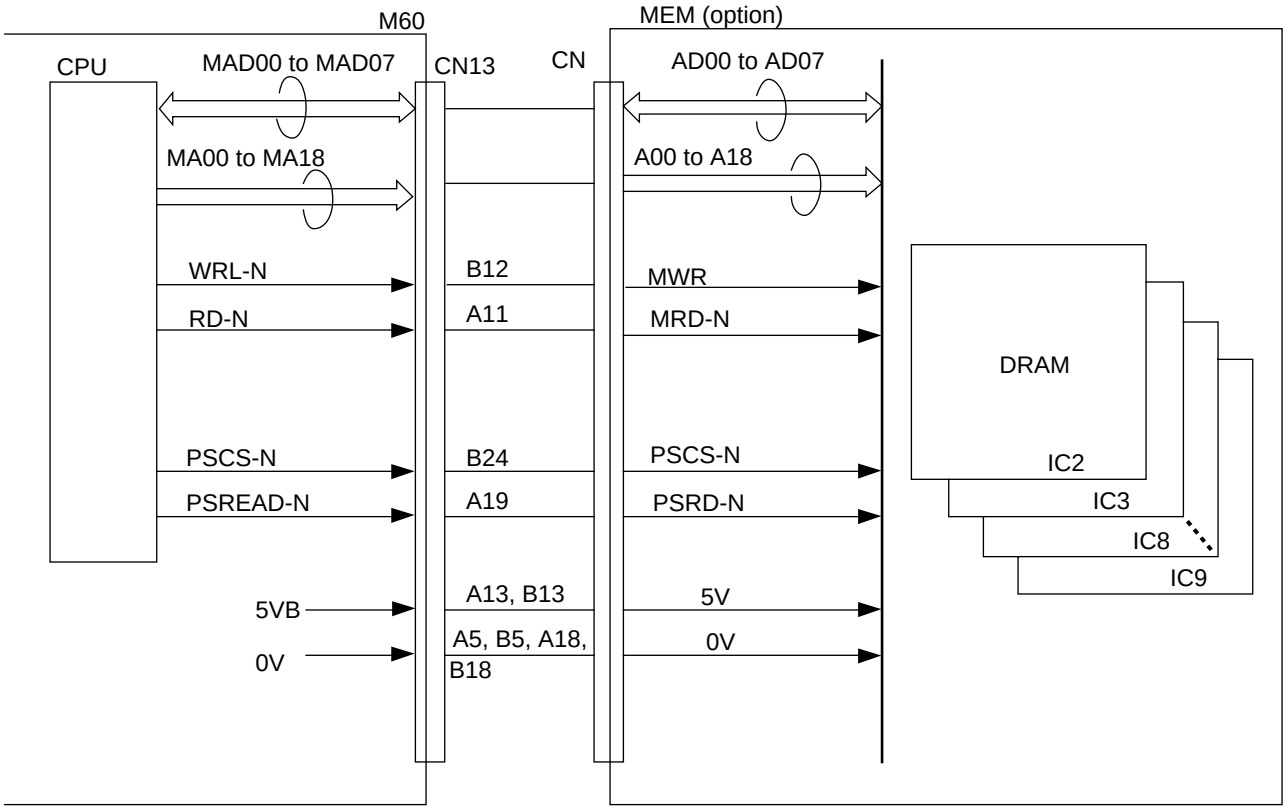

Figure 3.26 Related Signals of Memory Board (option)

3.7 TQSB (Second tray) Circuit Diagram: option

1. Block diagrm
   This board is installed as the optional board.

   Figure 3.27 shows a block diagram of the second tray (option).

2. Function
   Second tray consists of the following functions:
   - Paper capacity : 500 sheets
   - Paper size : A4, Letter, Legal
   - Paper-size selection : Automatic
   - Cassette/no-cassette selection : Automatic
   - Paper/no-paper selection : Automatic
   - Paper route open to facsimile transceiver unit : Automatic decision

   Control method:
   When second tray is installed with the facsimile transceiver unit, the tray is connected to the facsimile transceiver unit by a connecting cable. The tray is controlled by the command from CPU of PU (printer unit) section.

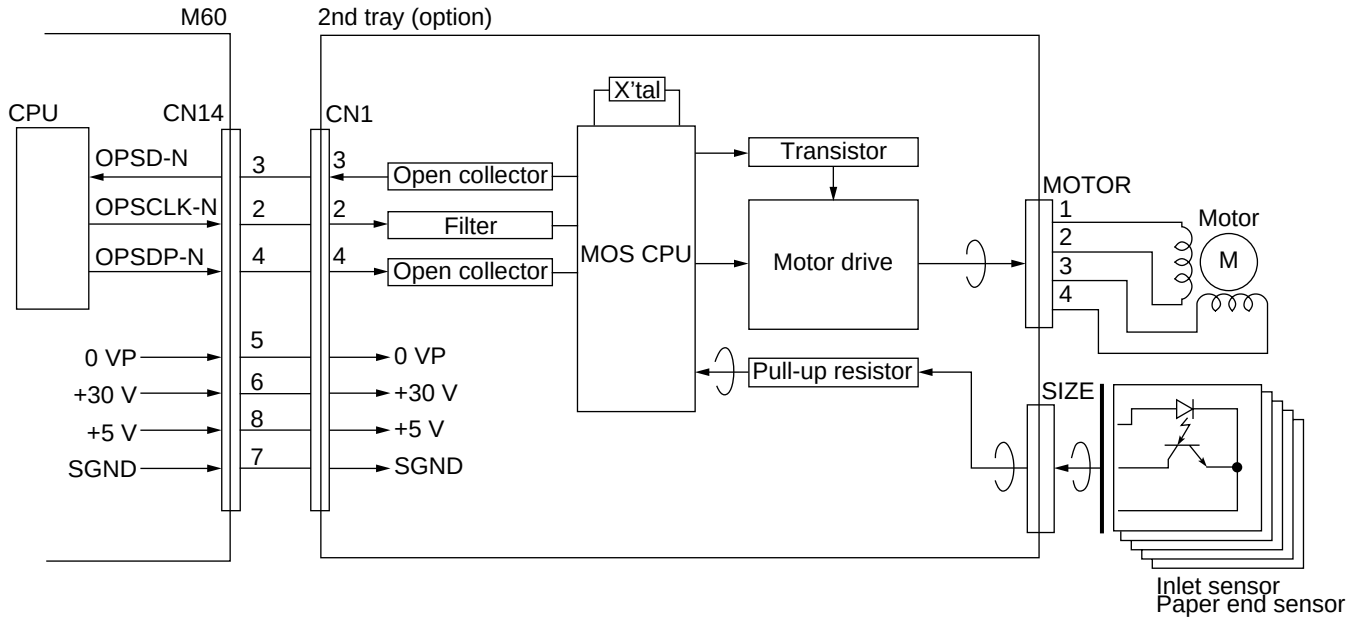

Figure 3.27 Block Diagram of 2nd Tray

3.8 CTT (PC interface unit) Circuit Diagram (option)

CTT board is used as an interface board of PC and FAX when PC is connected to facsimile machine.

1. Block diagram
   CTT board circuit is formed by Receiver, Driver, and 1284-I/F.

   Figure 3.28 shows related signals of CTT board.

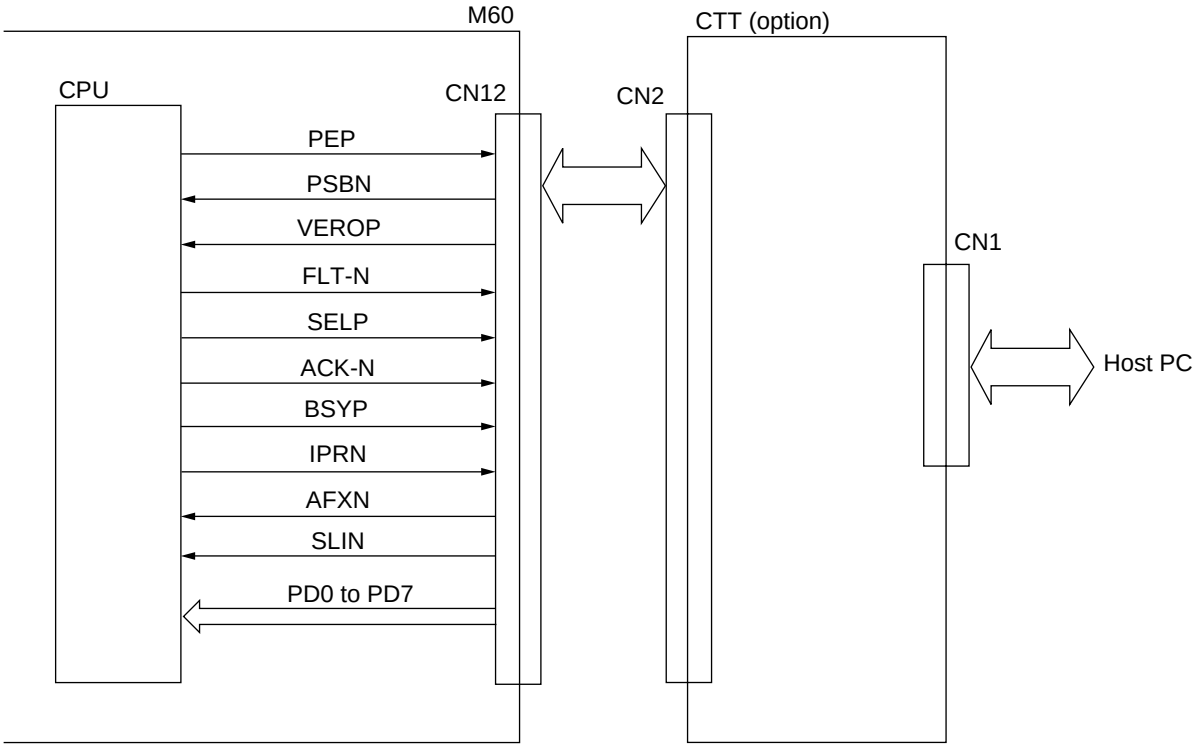

Figure 3.28 Related Signals of P050 (PC interface unit)

2. Function

1) Summary
By installing the optional board (Bi-Centro), the following MFP (Multi-Function Peripheral) function can be realized.

Example:
- PC printer function (300/Q600 dpi) 8PPM
- PC Scanner function 300 dpi
- PC Fax Modem function (TIA/EIA Class 1)
- PC Memory function
- PC Multiplex function Disable Enable

Interface between Fax machine and Host PC consists of three layer structure as detailed below, each sub-system can be operated at the same time by adopting a Oki-MFPI protocol in both Fax machine and Host PC.

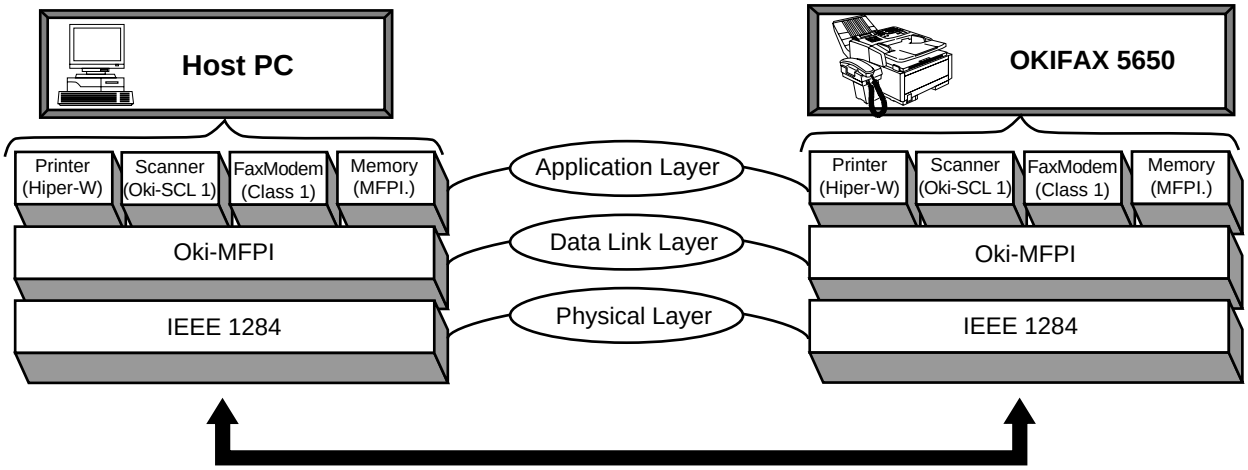

a) Application layer:
Performs a function control of each sub-system at the Host PC and Fax machine.

b) Data-Link layer:
Performs a protocol control at the Host PC and Oki-MFPI (TIA IS650 Level 1 requirement).
(Packetize/Unpacketize, flow control, Transfers command/data between each sub-system)

c) Physical layer:
Has a bi-directional interface control circuit which conforms to IEEE1284.
Standard mode: Compatible, Nibble
Oki special mode: MCE (Mode Change Express)

Following devices are as sub-system:
1) Printer (HIPER-W: Host based Image PrintER for Windows)
Encodes a rater image data in Host PC and transfers a data with HIPER-W emulation.

2) Scanner (Oki-SCL 1: Oki-Scanner Control Language 1)
Transfers and image data of document scanned in Fax machine to the Host PC with Oki-SCL 1 command.

3) FaxModem (TIA/EIA Class 1)
Send/receive a Class 1 command between Host PC and Fax machine.

4) Memory (MFPL: Multi-Function Peripheral Language)
By using MFPL command, it is possible to display on screen of Host PC for condition of Fax machine and performs the initial registration of the telephone number used in Fax machine.

3.9 G4N-PCB

This PCB board is optionally available. Using this board allows the system to be ready for the G4 protocol.

The block diagram of this board is shown on the next page.

This board is connected to the MCNT board with a 50-pin connector (CN1). 23 pins of this connector are signals lines dedicated to the G4N board, and the remaining 27 pins are signal lines shared with the NCU board.

Data is transferred to/from the CPU on the MCNT board via the 2-KB dual port RAM. When data is sent, the MCNT board causes an interrupt to the G4N board using a CUREQ-N signal and writes data into the 2-KB dual port RAM. The G4N board expands the data from the dual port RAM in the DRAM, and sends the expanded data to the line via the driver.

When data is received, the G4N board causes an interrupt to the MCNT board using an OPREQ-N signal and writes data from the DRAM into the dual port RAM. The NCNT board reads data from the dual port RAM, expands the data in the DRAM on the MCNT board, and sends the data to the LED head via the IOGA4.

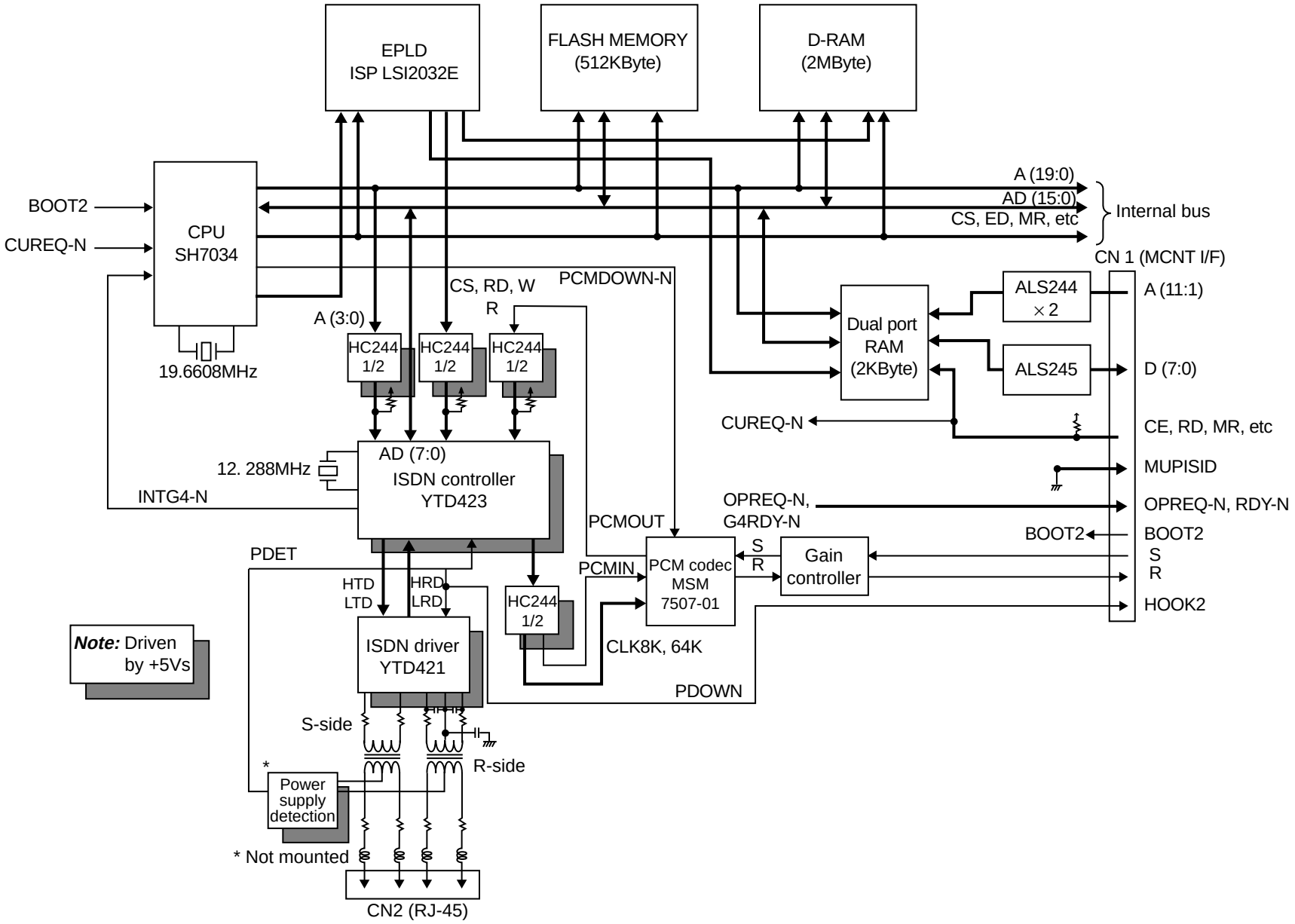

Figure 3.29 G4N Board Block Diagram

3.10 TELU, TEL-W2, TEL-W1, TEL-W2D and TEL-W2F Circuit Diagram (option)

TEL board is used for the control board of the telephone set when the optional telephone assembly is installed on the facsimile transceiver, and TEL board is selected from TELU, TEL-W2, TEL-W1, TEL-W2D and TEL-W2F because it differs depending on country's specifications. Therefore, the TEL circuit diagram is destined for the following countries.

Note: The relationship between TEL and other boards (NCU, NTIF, HOOK, etc.) shows 1.35 OKIFAX 5650 facsimile transceiver.

- TELU circuit diagram
  US and Canada.

- TEL-W2 circuit diagram
  Sweden, Finland, The Netherlands, Ireland, Portugal, New Zealand, Australia, Spain, Greece, Switzerland and Austria.

- TEL-W1 circuit diagram
  UK, Norway, Denmark, Belgium and Italy.

- TEL-W2D circuit diagram
  Germany

- TEL-W2F
  France

1. Block diagram
   - Figure 3.30 shows a block diagram of TELU circuit.
   - Figure 3.31 shows a block diagram of TEL-W2 circuit.
   - Figure 3.32 shows a block diagram of TEL-W1 circuit.
   - Figure 3.33 shows a block diagram of TEL-W2D circuit.
   - Figure 3.34 shows a block diagram of TEL-W2F circuit.

2. General functions of this circuit are as follows:
   - Speech IC
   - Sending Level Adjustment
   - Receiving Level Adjustment
   - Sending Frequency Response Adjustment
   - Side Tone Adjustment
   - DC V-1 Characteristics Adjustment
   - Return Loss Adjustment
   - AGC (automatic gain control)
   - Manual Pad
   - Sending Frequency Response Adjustment
   - Receiving Frequency Response Adjustment
   - Pulse Dialing (for TEL-W1)
   - MF Dialing (for TEL-W1)
   - Charge Pulse Elimination Characteristics (for TEL-W2D)
   - Handset Interface

3.10.1 Explanation of TEL circuit diagram

This section describes functional blocks of individual TEL circuit diagram.

1. TELU circuit diagram

TELU circuit diagram is formed by Speech IC and interface of UNC, HOOK SW and HAND-SET.

1) Speech IC
The hybrid circuit is formed by Speech IC.

2) Handset Interface
- Transmitter signal route
  Signal from the microphone of the handset is input to pin 15 and 16 of Speech IC. This signal is determined by the amplification factor and output to the telephone line via UNC, Hook switch and DB2 (rectifier).

- Receive signal route
  Receive signal from the telephone line enters Speech IC via UNC, Hook switch and DB2 and is output to pin 2 & 3 of the speaker of the handset.

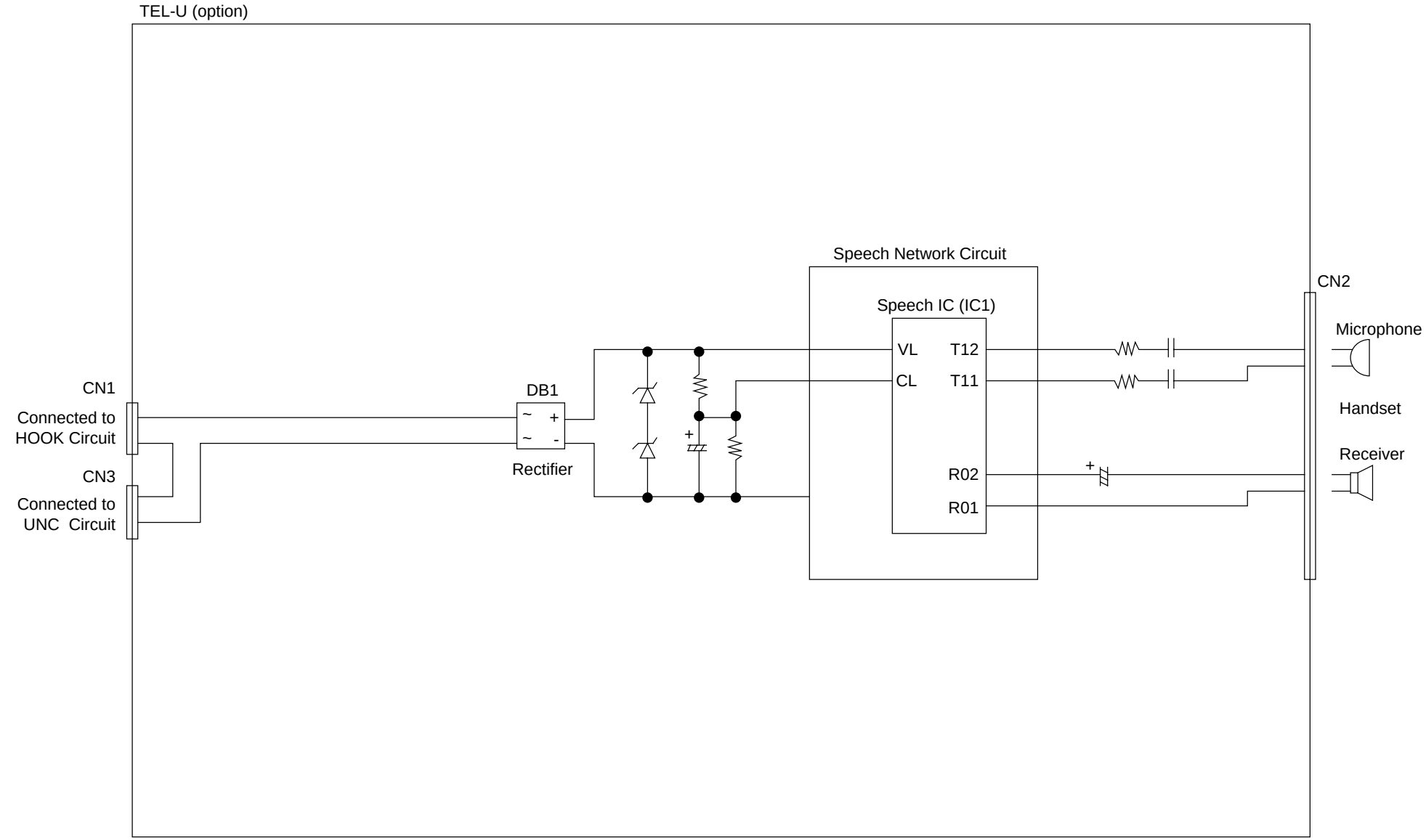

Figure 3.30 Block Diagram of TEL-U (option)

3.10.2 TEL-W2 circuit diagram

Note: Refer to each country's hardware parameters comparison table.

1) Speech IC
   General functions of the speech IC are as follows:
   - Basic speech functions included.
   - Separate receive pre-amplifier with signal output terminal
   - Separate receive power amplifier input terminal, cause it is possible to mixing input.
   - Balanced input for microphone input to provide immunity to common mode noise.
   - MF pre-amplifier input terminal is possible to mixing input.
   - Dial pulse waveform improvement circuit included.
   - Manual pad function included.
   - The transmit, receive, and DTMF amplifier are provided with AGC in accordance with the line current.

2) Sending Level Adjustment
   The sending level is determined by the circuit section formed by resistors R55, R56, R57 and R58, and the bits of SW3 connect the resistors in parallel. The sending level is maximum when all the bits of SW3 are set to ON, and minimum when all the bits of SW3 are set to OFF.

3) Receiving Level Adjustment
   The receiving level is determined by the circuit section formed by resistors R34, R35, R36, R82, R83 and R84, and the bits of SW5. The receiving level is minimum when all the bits of SW5 are set to ON, and maximum when all the bits of SW5 are set to OFF.

4) Sending Frequency Response Adjustment
   The circuit section affecting the low range level of the sending frequency response is formed by capacitors C59, C35, C36 and C60, which are connected in series to the section in front of a transmitter. The low range level can be adjusted by the ON/OFF setting of bits 1 and 2 of SW3. The high range level can be adjusted by the ON/OFF setting of SW6-5.

   Note: When the frequency response is changed, the sending and receiving levels may be changed. Verify the sending and receiving levels after adjustment.

5) Side Tone Adjustment
   The setting of the side-tone level is performed by the setting of SW1-1 through 8 and SW2-1. One of these bits it set to ON for each individual country. The side-tone level is interrelated with the receiving and sending level. The side-tone level becomes higher when the sending and receiving level are set lower.

   Note: After the side tone level is changed, the sending and receiving levels change, so readjust the sending and receiving level and reverify and readjust the side tone.

6) DC V-I (voltage-versus-current) Characteristics Adjustment
   The adjustment of the DC V-I characteristics at the time of line supplement is performed by D10, D11, D12, SW2-7, R25 and SW2-8. When raising the DC V-I value, set SW 2-7 to OFF or SW2-8 to ON. When decreasing the value, set SW2-7 to ON, or SW2-8 to OFF.

7) Return Loss
   The return loss setting is performed by SW2-2 to 6. One of the bits is set to ON for each individual country. When SW2-3 is set to ON, the impedance is set to 600 W's series.

8) AGC (automatic gain control)
   AGC is function for adjusting the sending and receiving levels automatically in accordance with the line current values, so that the optimal communication level is automatically set. The circuit section to determine the AGC characteristic is formed by the group of resistors R41, R43 and R44 connected to the AGC terminal of the speech IC. The AGC gain is high

when the resistor values are small, and the AGC gain is low when the resistor values are large. The AGC gain is adjusted by ON/OFF setting of SW6-2 and 3 connected to R43 and R44.

9) Manual Pad
The manual pad is used for a countermeasure by the ON setting of SW6-1 when howling has occurred because of line conditions. (normally set to OFF)

Note: Adjustment Sequence of Characteristics
Since individual characteristics are interrelated to each other, the settings shall be performed in the following sequence:

(1) DC resistance
(2) Return loss
(3) Sending level
(4) Receiving level
(5) Side tone level

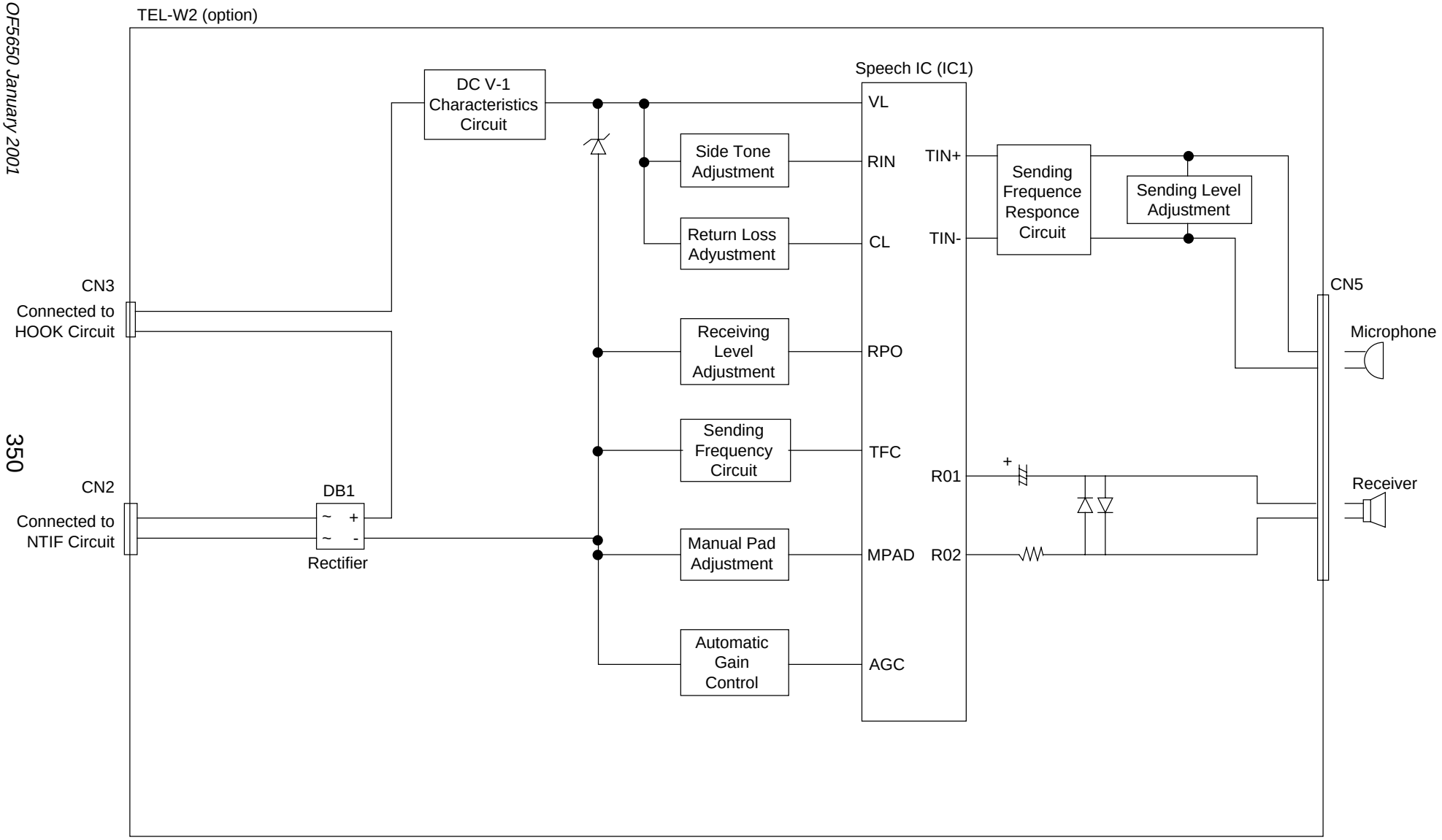

Figure 3.31 Block Diagram of TEL-W2 (option)

Each country's hardware parameters comparison table. OKIFAX 5650

Dip-switch No.		Sweden	Finland	The Netherlands	Ireland	Portugal	New Zealand	Australia	Remarks
SW1	1	ON	ON	OFF	OFF	OFF	OFF	OFF	Balancing Network
	2	OFF	OFF	OFF	OFF	OFF	OFF	OFF	
	3	OFF	OFF	OFF	OFF	OFF	OFF	ON	
	4	OFF	OFF	OFF	OFF	OFF	OFF	OFF	
	5	OFF	OFF	OFF	OFF	ON	OFF	OFF	
	6	OFF	OFF	ON	OFF	OFF	OFF	OFF	
	7	OFF	OFF	OFF	ON	OFF	OFF	OFF	
	8	OFF	OFF	OFF	OFF	OFF	ON	OFF	
SW2	1	OFF	OFF	OFF	OFF	OFF	OFF	OFF	
	2	OFF	OFF	OFF	OFF	OFF	OFF	OFF	Impedance Matching
	3	ON	ON	ON	ON	ON	OFF	OFF	
	4	OFF	OFF	OFF	OFF	OFF	ON	OFF	
	5	OFF	OFF	OFF	OFF	OFF	OFF	ON	
	6	OFF	OFF	OFF	OFF	OFF	OFF	OFF	
	7	OFF	OFF	OFF	OFF	OFF	OFF	OFF	DC Resistance
	8	ON	ON	ON	ON	ON	ON	ON	Impedance Setting
SW3	1	ON	ON	ON	ON	ON	ON	OFF	Sending Frequency Setting
	2	ON	ON	ON	ON	ON	ON	OFF	
	3	ON	ON	OFF	ON	ON	OFF	OFF	Sending Level Setting
	4	OFF	OFF	ON	OFF	ON	ON	OFF	
	5	OFF	OFF	OFF	ON	ON	ON	OFF	
	6	ON	ON	ON	OFF	OFF	OFF	OFF	
	7	OFF	OFF	OFF	OFF	OFF	OFF	OFF	Not Used
	8	OFF	OFF	OFF	OFF	OFF	OFF	OFF	
SW5	1	ON	ON	OFF	ON	ON	OFF	ON	Rx Frequency (FLUP)
	2	OFF	OFF	OFF	OFF	OFF	OFF	OFF	Receiving Level Setting
	3	OFF	OFF	OFF	OFF	OFF	OFF	OFF	
	4	OFF	ON	ON	OFF	ON	ON	ON	
	5	OFF	ON	ON	OFF	OFF	ON	OFF	
	6	ON	OFF	OFF	ON	ON	OFF	ON	
	7	ON	ON	ON	ON	ON	ON	ON	
	8	ON	ON	OFF	ON	ON	ON	OFF	Rx Frequency (FHUP)
SW6	1	OFF	OFF	OFF	OFF	OFF	OFF	OFF	Manual Pad Setting
	2	OFF	OFF	OFF	ON	ON	ON	OFF	Automatic Gain Control
	3	ON	ON	OFF	OFF	OFF	OFF	ON	
	4	OFF	OFF	OFF	OFF	OFF	OFF	OFF	Not Used
	5	ON	ON	OFF	ON	OFF	OFF	OFF	Tx Frequency Setting
	6	OFF	OFF	OFF	OFF	OFF	OFF	OFF	Not Used

Dip-switch No.		Spain	Greece	Switzer-land	Austria	Remarks
SW1	1	OFF	OFF	ON	OFF	Balancing Network (Side-tone Setting)
	2	ON	OFF	OFF	ON	
	3	OFF	OFF	OFF	OFF	
	4	OFF	ON	OFF	OFF	
	5	OFF	OFF	OFF	OFF	
	6	OFF	OFF	OFF	OFF	
	7	OFF	OFF	OFF	OFF	
	8	OFF	OFF	OFF	OFF	
SW2	1	OFF	OFF	OFF	OFF	
	2	OFF	OFF	ON	ON	Impedance Matching Setting
	3	ON	ON	OFF	OFF	
	4	OFF	OFF	OFF	OFF	
	5	OFF	OFF	OFF	OFF	
	6	OFF	OFF	OFF	OFF	
	7	ON	ON	OFF	OFF	DC Resistance
	8	OFF	OFF	OFF	OFF	Impedance Setting
SW3	1	ON	ON	OFF	OFF	Sending Frequency Setting
	2	ON	ON	OFF	OFF	
	3	OFF	ON	OFF	OFF	Sending Level Setting
	4	ON	ON	OFF	OFF	
	5	OFF	ON	ON	ON	
	6	ON	OFF	OFF	OFF	
	7	OFF	OFF	OFF	OFF	Not Used
	8	OFF	OFF	OFF	OFF	
SW5	1	OFF	OFF	ON	ON	Rx Frequency (FLUP)
	2	ON	OFF	ON	ON	Receiving Level Setting
	3	OFF	ON	OFF	OFF	
	4	ON	ON	OFF	OFF	
	5	OFF	ON	ON	ON	
	6	OFF	OFF	OFF	OFF	
	7	ON	OFF	OFF	OFF	
	8	OFF	OFF	OFF	OFF	Rx Frequency (FHUP)
SW6	1	OFF	OFF	OFF	OFF	Manual Pad Setting
	2	OFF	OFF	OFF	OFF	Automatic Gain Control
	3	OFF	OFF	OFF	OFF	
	4	OFF	OFF	OFF	OFF	Not Used
	5	OFF	OFF	OFF	OFF	Tx Frequency Setting
	6	OFF	OFF	OFF	OFF	Not Used

3.10.3 TEL-W1 circuit diagram

Note: Refer to each country's hardware parameter comparison table.

1) Speech IC
General functions of the speech IC are as follows:
- Basic speech functions included.
- Separate receive pre-amplifier with signal output terminal
- Separate receive power amplifier input terminal.
- Balanced input for microphone input to provide immunity to common mode noise.
- MF pre-amplifier input terminal.
- Dial pulse waveform improvement circuit included.
- Manual pad function included.
- The transmit, receive, and DTMF amplifier are provided with AGC in accodance with the line current.

2) Sending Level Adjustment
The sending level is adjusted by the selection of resistors allocated for individual countries by the dip-switch settings. The dip-switch set to ON corresponds to the country as shown in the table below.

Country	Dip-switch	Symbol
UK	SW3-1	R47
Italy	SW3-2	R48
Denmark	SW3-3	R55
Norway	SW3-4	R56
Belgium	SW3-1,4	R47, R56

- Increase the resistor value to set louder sending level (i.e. lower SLR value).
- Lower the resistor value to set quieter sending level (i.e. higher SLR value).

3) Receiving Level Adjustment
The receiving level is adjusted by the selection of resistors allocated for individual countries by the dip-switch settings. The dip-switch set to ON correspond to the country as shown in the table below.

Country	Dip-switch	Symbol
UK	SW5-1	R35
Italy	SW5-2	R36
Denmark/ Belgium	SW5-3	R72
Norway	SW5-4	R73

- Lower the resistor value to set louder receiving level (i.e. lower RLR value).
- Increase the resistor value to set quieter receiving level (i.e. higher RLR vallue).

4) Sending Frequency Response Adjustment
The adjustment of the high range frequency response is performed by changing the capacitance of the capacitor C33. Increase the value of C33 to lower the amplitude of the high range level. Decrease the value of C33 to raise the amplitude. The adjustnent of the low range frequency response is performed by changing the capacitance of the capacitors C35 and C37. Decrease the capacitance of C35 and C37 to lower the amplitude of the low range level. Increase the capacitance of C35 and C37 to raise the amplitude.

Note: When the sending frequency response is changed, the sending loudness rating (SLR) value may change. It is required to measure the SLR value again and verify it.

5) Receiving Frequency Response Adjustment
The adjustment of the low range frequency response is performed by changing the capacitance of the capacitor C26. Increase the capacitance of C26 to raise the amplitude of the low range level. Decrease the capacitance of C26 to lower the amplitude.
The adjustment of the high range-frequency response is performed by changing the capacitance of the capacitors C29. Decrease the capacitance of C29 to raise the amplitude of the high range level. Increase the capacitance of C29 to lower the amplitude of the high range level.

Note: When the receiving frequency response is changed, the receiving loudness rating (RLR) value may change. It is required to measure the RLR value again and verify it.

6) Side-Tone Adjustment
The side-tone adjustment is performed by the C-R networks corresponding to the individual countries. For adjusting the side tone, select the corresponding C-R network by the designated DIP switch and adjust the STMR value to the specified value by the values of capacitors and resistors.

The dip-switch set to ON corresponds to the country as shown in the table.

Note: When the C-R network is changed for the side tone adjustment, the receiving loudness rating (RLR) value may change. It is required to measure the RLR value again and verify it.

Country	Dip-switch	Symbol (network)
UK	SW1-1	R19, C16, R22
Italy/ Belgium	SW1-2	R20, C17, R23
Denmark	SW1-3	R21, C18, R24
Norway	SW1-4	R62, C47, R63

7) DC V-I Characteristics
The DC V-I characteristics at the time of the line supplement is performed by diodes D10, D11 and SW4-5, and can be selected from two types by setting of dip-switch 4-5. In case SW4-5 is set to ON, since D10, and D11 are short-circuited, V/I value is lowered. In case SW4-5 is set to OFF, V/I value is raised.

8) Return Loss Adjustment
The return loss adjustment is performed by the installed C-R networks corresponding to the individual country. For adjusting the return loss, select the corresponding C-R network by the designated DIP switch and adjust the return loss by changing the values of capacitors and resistors.

The dip-switch set to ON corresponds to the country as shown in the table.

Country	Dip-switch	Symbol (network)
UK	SW1-5	R29, C21, R26
Italy/Belgium	SW1-6	R30, C22, R27
Denmark	SW1-7	R31, C23, R28
Norway	SW1-8	R76, C54, R77

9) AGC (automatic gain control)
AGC is a function for adjusting the sending and receiving levels automatically in accordance with the line current values, so that the optimal communication level is automatically set.

The circuit section to determine the AGC characteristics is formed by resistors R41 and R43 connected to the AGC terminal of the speech IC. The AGC gain is high when the resistor values are small, and the AGC gain is low when the resistor values are large.

10) Pulse Dialling
Changing the make-and-break ratio is determined by the dip-switch SW4-1 and 2.

- Setting SW4-1 to ON and SW4-2 to OFF corresponds to a 33% make ratio.
- Setting SW4-1 to OFF and SW4-2 to ON corresponds to a 40% make ratio.

11) MF dialling
The MF signal sending level is adjusted by the selection of resistors and capacitors allocated for the individual countries by the dip-switch setting.

The dip-switch set to ON corresponds to the country as shown in the table below.

Country	Dip-switch	Symbol	Rated Value
UK	SW2-1	C31, R38	-9 dBm/-11 dBm
Italy/Belgium	SW2-2	C70, R39	-6 dBm/-8 dBm
Denmark	SW2-3	C71, R80	-9 dBm/-11 dBm
Norway	SW2-4	C72, R81	-9 dBm/-11 dBm

Increase the resistor value to lower the MF signal sending level, and decrease the resistor value to raise the sending level. The difference between the high and low groups of the MF signal is performed by changing the capacitance of the capacitor. The allowable level difference between the high and low groups is (2±1) dB.

12) Manual Pad
The manual pad is used as a countermeasure by the ON setting of SW3-8 when howling is occurs because of line conditions. (normally set to OFF)

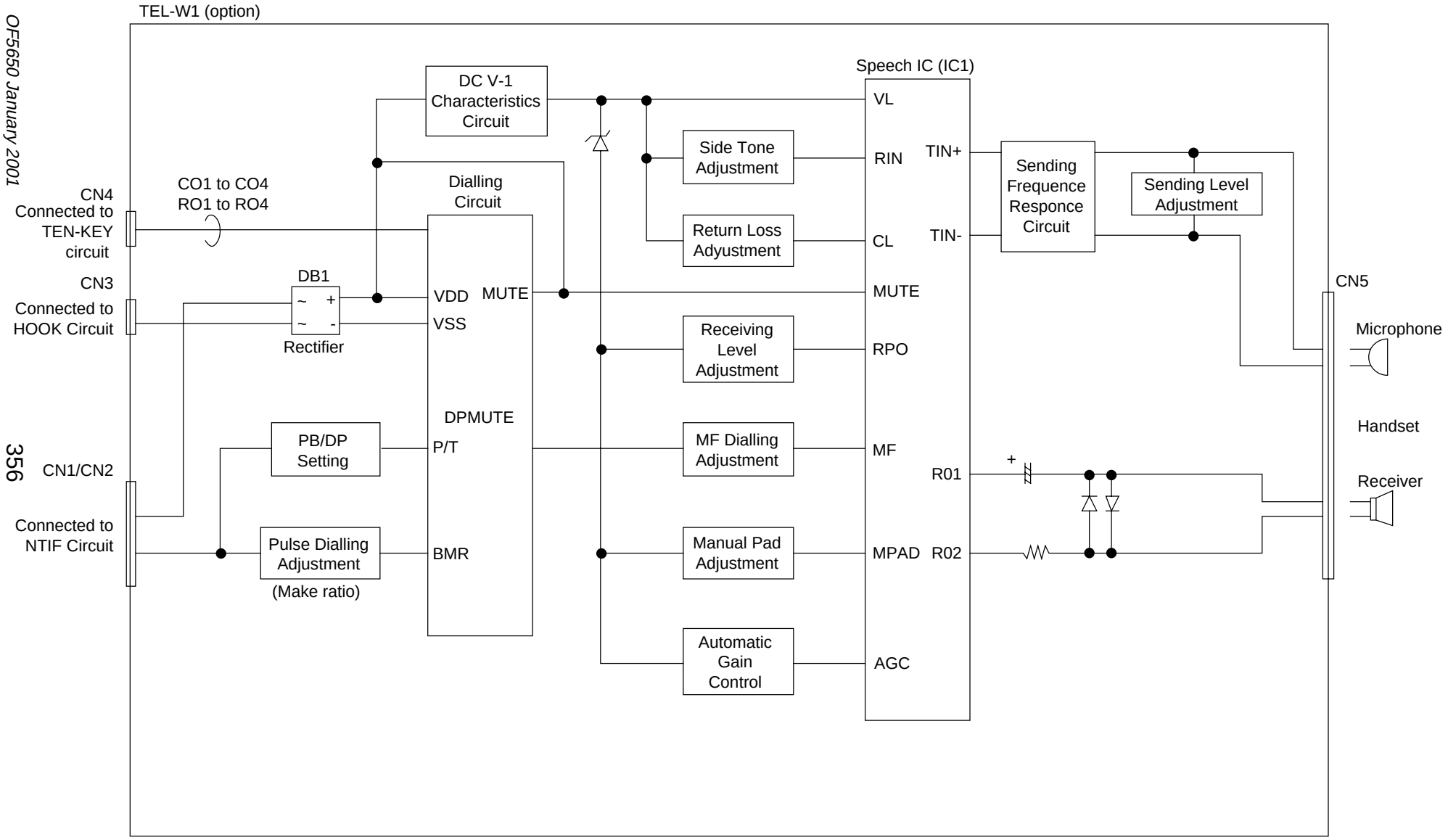

Figure 3.32 Block Diagram of TEL-W1 (option)

Dip-switch No.		United Kingdom	Italy	Denmark	Norway	Belgium	Remarks
SW1	1	ON	OFF	OFF	OFF	OFF	Balancing Network (Side Tone Setting)
	2	OFF	ON	OFF	OFF	ON	
	3	OFF	OFF	ON	OFF	OFF	
	4	OFF	OFF	OFF	ON	OFF	
	5	ON	OFF	OFF	OFF	OFF	Impedance Matching Setting
	6	OFF	ON	OFF	OFF	ON	
	7	OFF	OFF	ON	ON	OFF	
	8	OFF	OFF	OFF	ON	OFF	
SW2	1	ON	OFF	OFF	OFF	OFF	
	2	OFF	ON	OFF	OFF	ON	MF-tone Level Setting
	3	OFF	OFF	ON	OFF	OFF	
	4	OFF	OFF	OFF	ON	OFF	
SW3	1	ON	OFF	OFF	OFF	ON	Seding Level Setting
	2	OFF	ON	OFF	OFF	OFF	
	3	OFF	OFF	ON	OFF	OFF	
	4	OFF	OFF	OFF	ON	ON	
	5	ON	OFF	ON	ON	OFF	MF-tine Level Setting
	6	ON	ON	OFF	OFF	ON	Automatic Gain Control
	7	OFF	ON	OFF	OFF	OFF	
	8	OFF	OFF	OFF	OFF	OFF	Manual Pad Setting
SW4	1	ON	OFF	ON	ON	ON	MEKE:
	2	OFF	ON	OFF	OFF	OFF	
	3	ON	ON	OFF	OFF	ON	RATE:
	4	OFF	OFF	ON	ON	OFF	
	5	OFF	ON	ON	ON	ON	DC Resistance
	6	OFF	OFF	ON	OFF	OFF	Threshold
SW5	1	ON	OFF	OFF	OFF	OFF	Receiving Level Setting
	2	OFF	ON	OFF	OFF	OFF	
	3	OFF	OFF	ON	OFF	ON	
	4	OFF	OFF	OFF	ON	OFF	

3.10.4 TEL-W2D circuit diagram

TEL-W2D board is for the Germany version only.

1) Speech IC
   General functions of the speech IC are as follows:
   - Basic speech functions included.
   - Separate receive pre-amplifier with signal output terminal
   - Separate receive power amplifier input terminal, cause it is possible to mixing input.
   - Balanced input for microphone input to provide immunity to common mode noise.
   - MF pre-amplifier input terminal is possible to mixing input.
   - Dial pulse waveform improvement circuit included.
   - Manual pad function included.
   - The transmit, receive, and DTMF amplifiers are provided with AGC in accodance with the line circuit.

2) Sending Level Adjustment
   The sending level can be adjusted by resistor R55 connected in parallel with the section in front of the transmitter. Increase the resistor value to lower the sending level, and decrease the value to raise the level.

3) Receiving Level Adjustment
   The receiving level is determined by the resistor value of R35. Decrease the resistor value of R35 to lower the receiving level, and increase it to raise the level.

4) Frequency Response Adjustment
   The high range frequency response of the transmitter is determined by the capacitance of C61. Increase the capacitance of C61 to lower the high range level, and decrease the capacitance to raise the high range level. The low range frequency response is determined by the capacitance of C36 and C37. Increase the capacitance of those capacitors to raise the low range level, and decrease the capacitance to lower the level. When the capacitance of C36 and C37 are changed, both capacitors should have the same value.

   The high range frequency response of the receiver is determined by the capacitance of C29. Increase the capacitance of C29 to lower the high range level, and lower the capacitance to raise the level. The low-range frequency response is determined by the capacitance of C26. Increase the capacitance to raise the low-range level, and lower the capacitance to decrease the low-range level.

5) Side-Tone Adjustment
   The side-tone level is determined by the values of R19, R22 and C16.

   Note: Changing the side tone level setting affects the sending and receiving levels, the verification and readjustment of the sending and receiving levels, and the verification and the readjustment of the side tone level are required.

6) DC V-I (voltage-versus-current) Characteristics Adjustment
   The DC V-I characteristics can be changed by mounting or not mounting D10 and D11. When D10 and D11 are mounted the DC V/I value is raised. When these diodes are deleted the DC V/I value is lowered. R202 is a 0 W resistor, which is mounted when D10 and D11 are not being installed.

7) Return Loss
   The circuit section which determines the return loss is formed by R26, R29 and C21.

8) AGC (automatic gain control)
   The gain of the AGC is determined by the resistor value of R41. To lower the AGC gain, raise the resistor value of R41. To raise the gain, decrease the resistor value.

9) Charge Pulse Elimination Characteristics
The Germany network sends 16kHz pulses for charging to the terminal while the terminal is connected to the line. The terminal should not cause any mulfunction for the communication by the charge pulses. In TEL-W2D PCB a parallel oscillation filter is formed by L3, C305/L2 and C301 which eliminates the charge pulses.

10) Manual Pad
The sending/receiving levels are lowered by 6dB when SW6-1 is set to ON. Use the setting as a countermeasure when howling is generated because of line conditions (normally set to OFF).

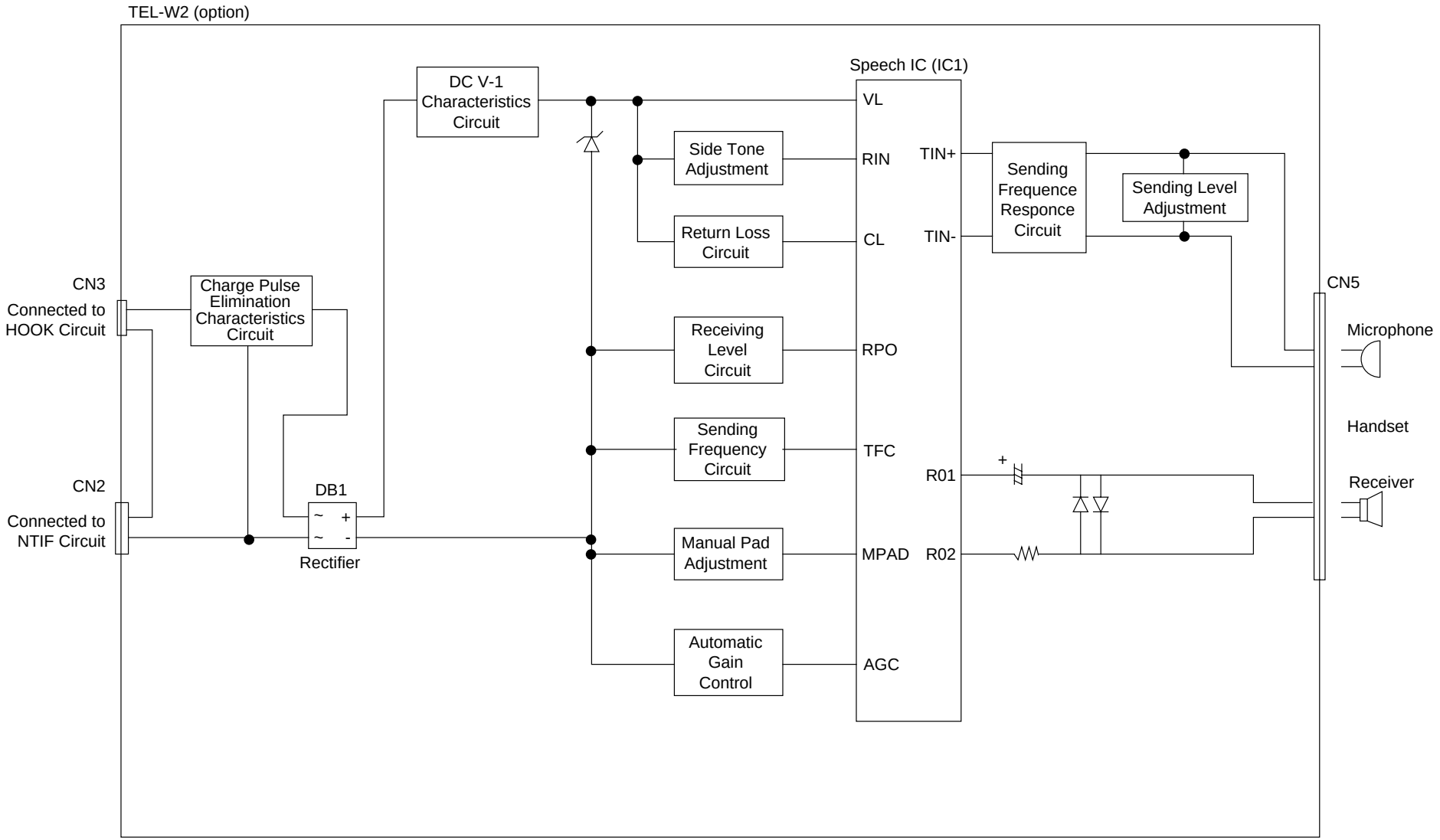

Figure 3.33 Block Diagram of TEL-W2D (option)

3.10.5 TEL-W2F circuit diagram

Note: Refer to each country's hardware parameters comparison table.

1) Speech IC
   General functions of the speech IC are as follows:
   - Basic speech functions included.
   - Separate receive pre-amplifier with signal output terminal
   - Separate receive power amplifier input terminal, cause it is possible to mixing input.
   - Balanced input for microphone input to provide immunity to common mode noise.
   - MF pre-amplifier input terminal is possible to mixing input.
   - Dial pulse waveform improvement circuit included.
   - Manual pad function included.
   - The transmit, receive, and DTMF amplifier are provided with AGC in accodance with the line current.

2) Sending Level Adjustment
   The sending level is determined by the circuit section formed by resistors R55, R56,R57 and R58, and the bits of R110-R114 connect the resistors in parallel. The sending level is maximum when all the bits of R110-R114 are set to "Mount", and minimum when all the bits of R110-R114 are set to "Not mount".

3) Receiving Level Adjustment
   The receiving level is determined by the circuit section formed by resistors R34, R35, R36, R37 and R38, and the bits of R101-R105. The receiving level is minimum when all the bits of R101-R105 are set to "Mount", and maximum when all the bits of R101-R105 are set to "Not mount".

4) Sending Frequency Response Adjustment
   The circuit section affecting the low range level of the sending frequency response is formed by capacitors, C35 and C36, which are connected in series to the section in front of a transmitter.

   Note: When the fequency response is changed, the sending and receiving levels may be changed. Verify the sending and receiving levels after adjustment.

5) Side Tone Adjustment
   Adjustment is unavailable.

6) DC V-I (voltage-versus-current) Characteristics Adjustment
   Adjustment is unavailable.

7) Return Loss
   Adjustment is unavailable.

8) AGC (automatic gain control)
   Adjustment is unavailable.

9) Manual Pad
   Adjustment is unavailable.

   (1) DC resistance
   (2) Return loss
   (3) Sending level
   (4) Receiving level
   (5) Side tone level

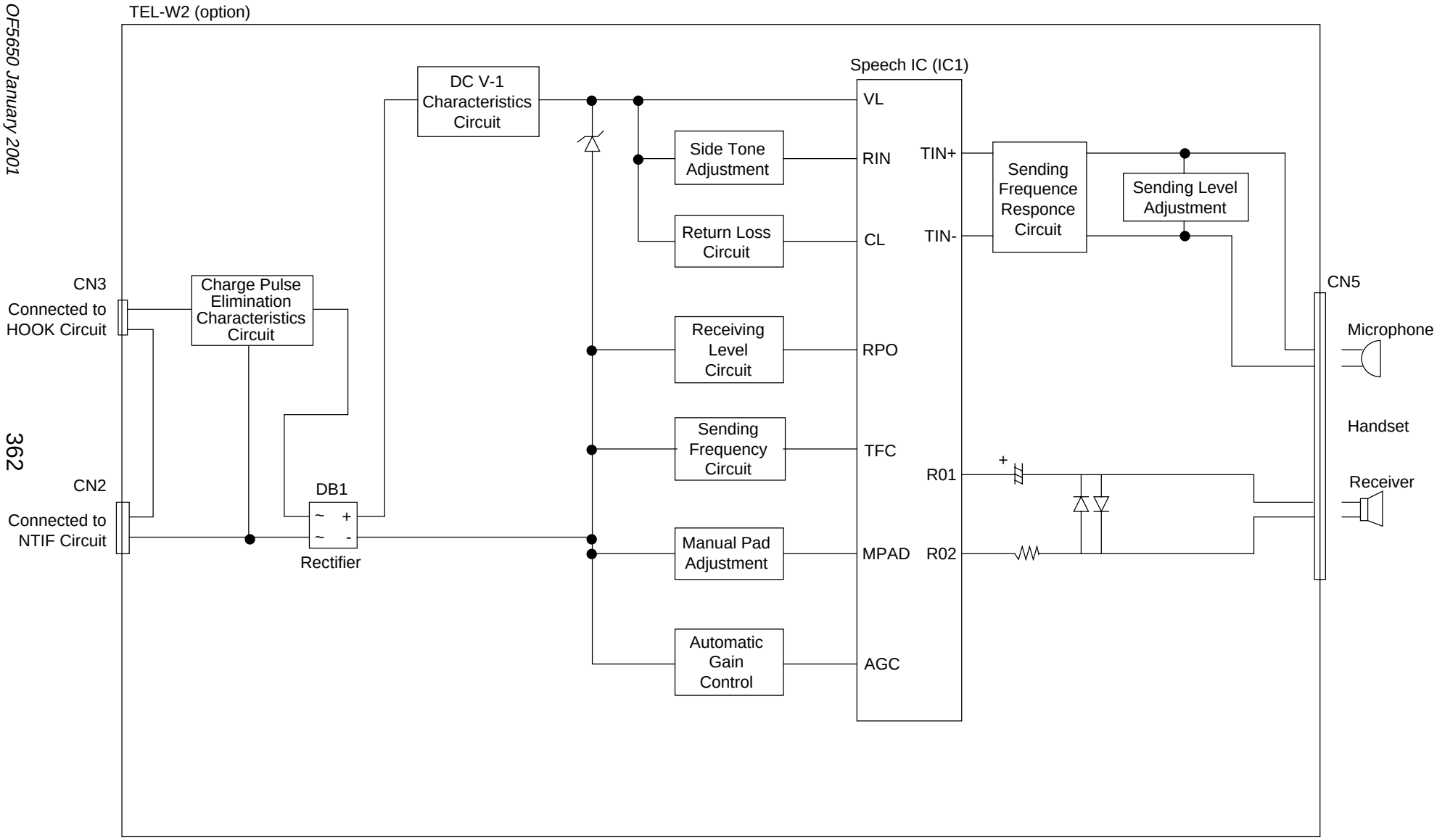

Figure 3.34 Block Diagram of TEL-W2F (option)

3.11 NTIF (NCU and TEL interface) Circuit Diagram (option)

NTIF board is used as an interface board of NCU, TEL and HOOK board. (Expect US version) The relationship between NTIF and the peripheral block diagram is shown in 13 OKIFAX 5650 facsimile transceiver.

1. Block diagram
   NTIF board circuit consists of the following blocks:

   1) Dialing
      The selection between the MF dial and the dial pulse (DP) is performed by SW2 setting. SW4-3 should be set to ON, and SW4-4 set to OFF on TEL-W1.

   2) Route selection
      The shunt wire activation for the UK version and the cascade connection of the external TEL are performed by the ON/OFF settings of SW3-1,2 and 3. The Dip-switch settings are shown below.

      Each country's hardware parameters comparison table:

Dip-sw 3 Setting Table (U.K.)

No.	Setting	Remarks
1	OFF	Route change
2	ON	
3	OFF	
4	OFF	Not used

Dip-sw 3 Setting Table (Except U.K.)

No.	Setting	Remarks
1	ON	Route change
2	OFF	
3	ON	
4	OFF	Not used

   3) Ringer circuit (for ABB/ABX type)
      This circuit is used for the buzzer sound when optional telephone set is mounted on the facsimile transceiver.

   4) Ring impedance
      The circuit section related to the ring impedance is formed by C1, R4. R5, and R6.

3.12 OKIFAX 5650 Facsimile Transceiver

Note: The relationship between countries names and boards names (NCU, Option board: TEL, NTIF, HOOK, etc.) is shown below:

No.	Figure	Version	Country	NCU	TELU	NTIF	TEL-W1	TEL-W2	TEL-W2D	TEL-W2F	HOOK	10KY	HAND SET
1	3.35	ODA	US, Canada	INU-	○						○		○
2	3.35	OLA	Latin America	INU-4	○						○		○
3	3.36	OEL	Denmark, Norway, Italy, Belgium	EN9-		○	○				○	○	○
4	3.37	OEL	Holland, Sweden, Finland, Ireland, Spain, Portugal, Greece, Swizerland, Austria	EN9-		○		○			○		○
5	3.36	OEL	UK	EN9-2		○	○				○	○	○
6	3.38	OEL	France	EN9-3		○				○	○	○	○
7	3.39	OEL, Tenovis	German	EN9-		○			○		○		○
8	3.37	NO-EC	Poland, Hungary, Czech Rep, Turkey, Israel, Russia	INU-5		○		○			○		○
9	3.37	INT	Singapole, China, Malaysia	INU-4		○		○			○		○
10	3.37	AUS	Australia	INU-2		○		○			○		○
11	3.37	AUS	New Zealand	INU-3		○		○			○		○

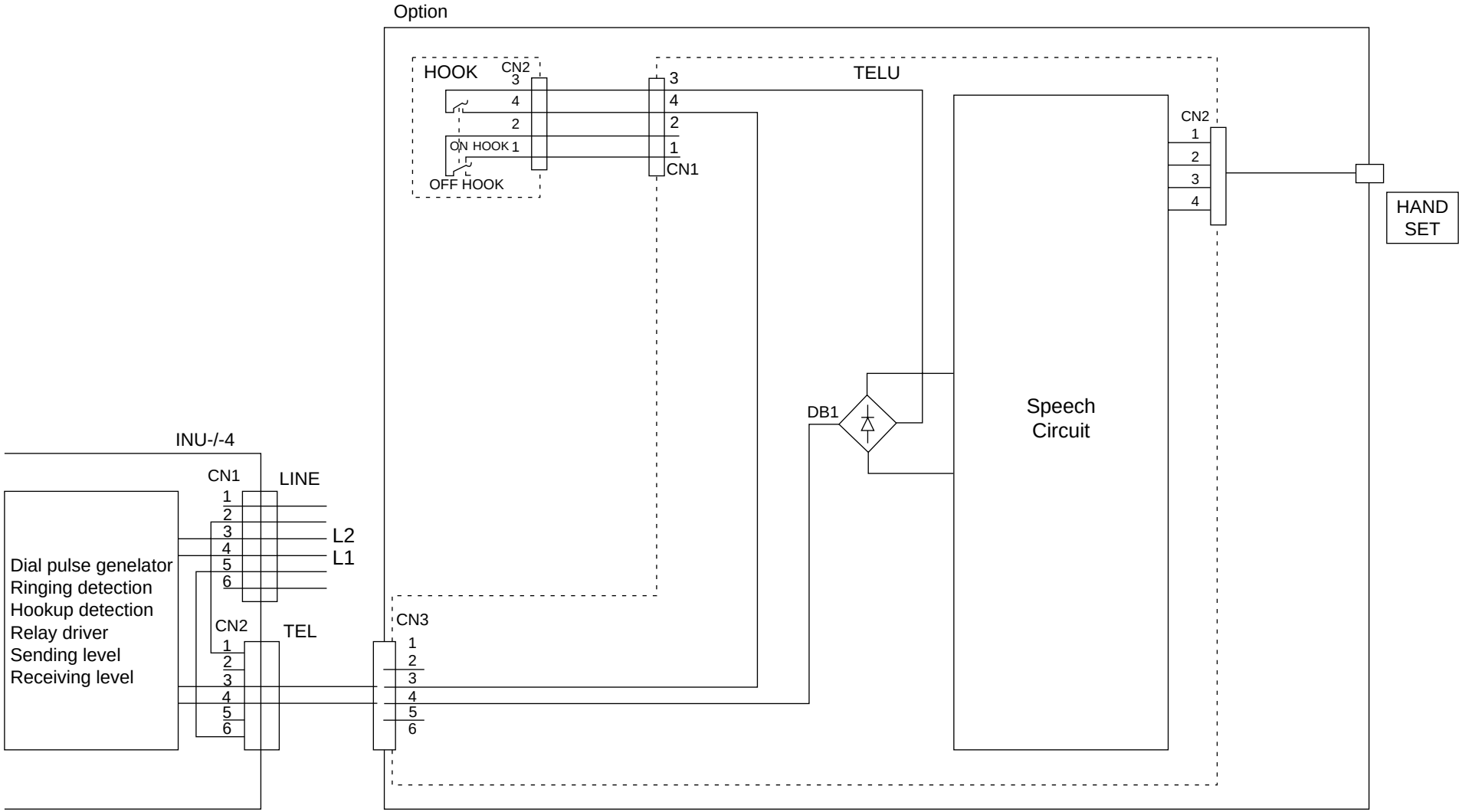

Figure 3.35 Relationship between INU-/-4 and TELU for US Version

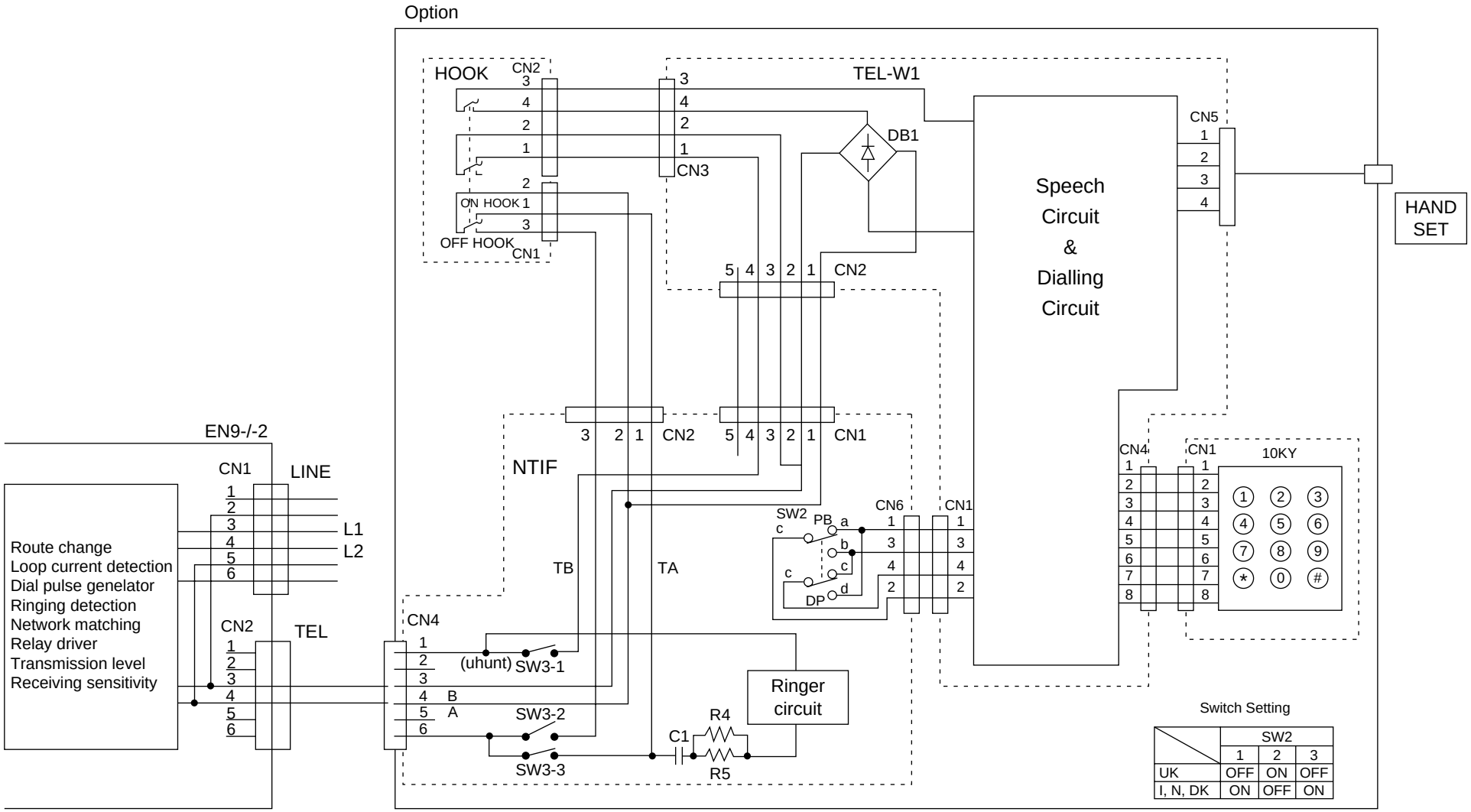

Figure 3.36 Relationship between EN9-/-2 and TEL-W1 for UK and INT'L Version

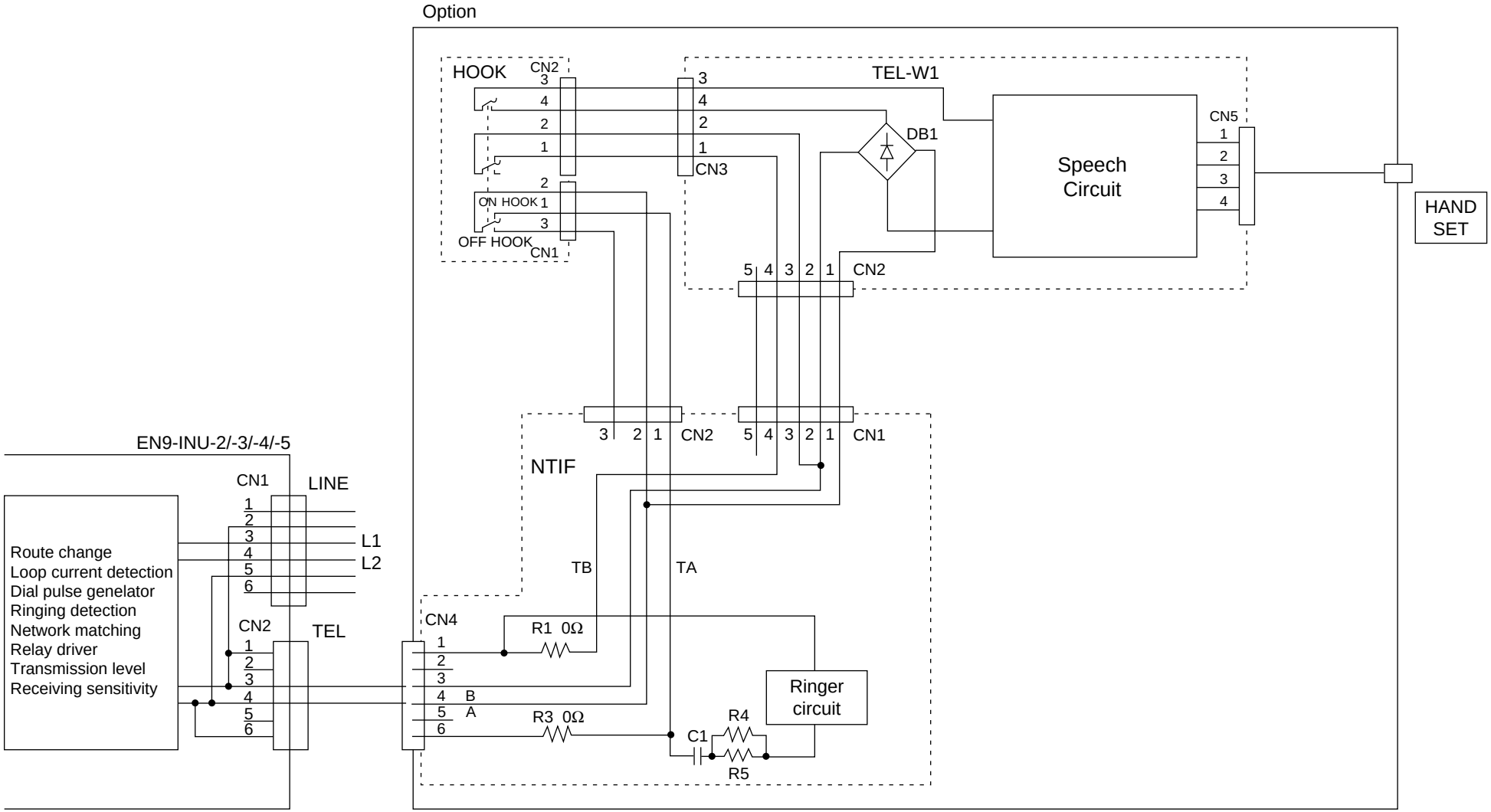

Figure 3.37 Relationship between EN9-/INU-2/-3/-4/-5 and TEL-W2 for A Band ABB Type of INT'L Version

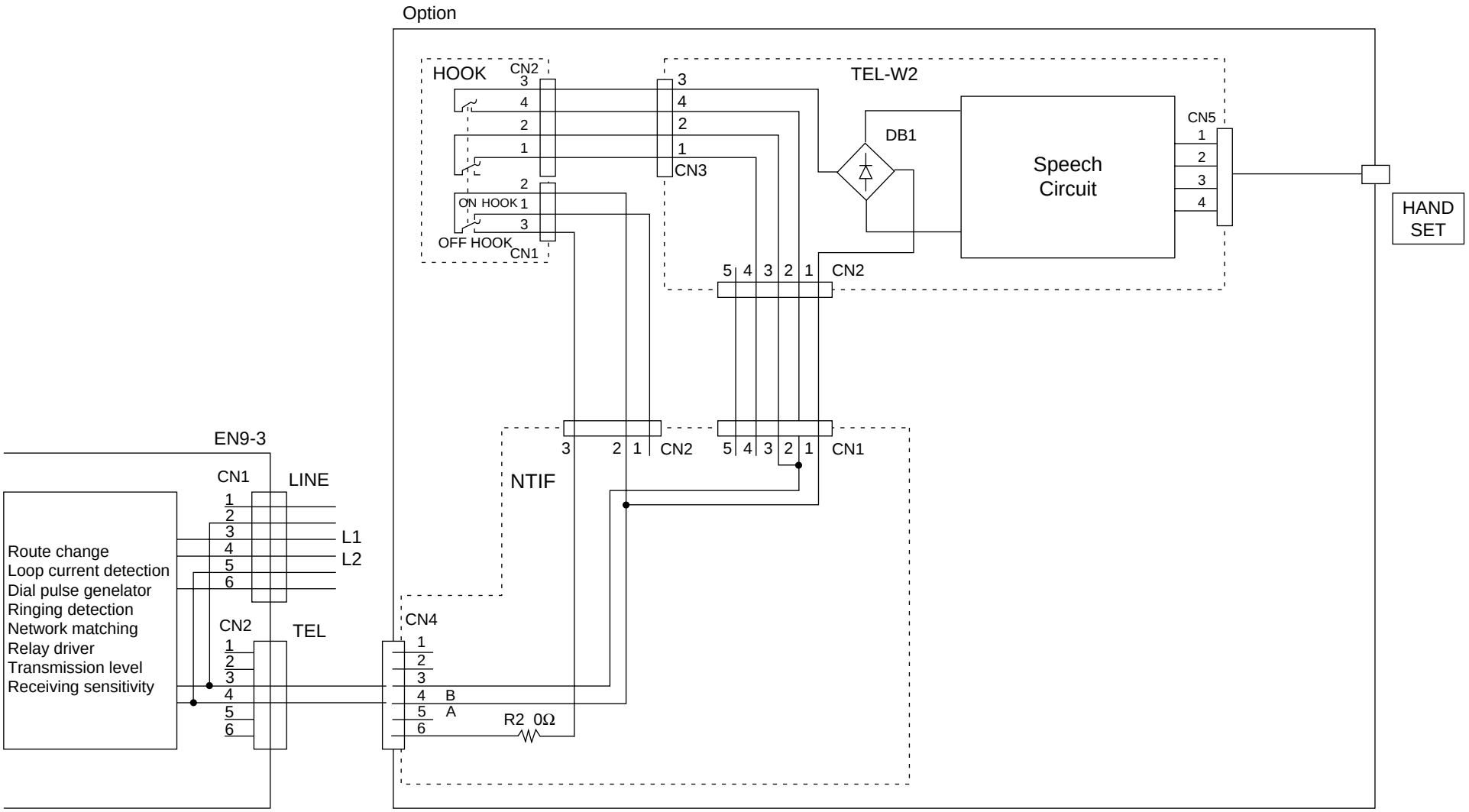

Figure 3.38 Relationship between EN9-3 and TEL-W2F for France Version

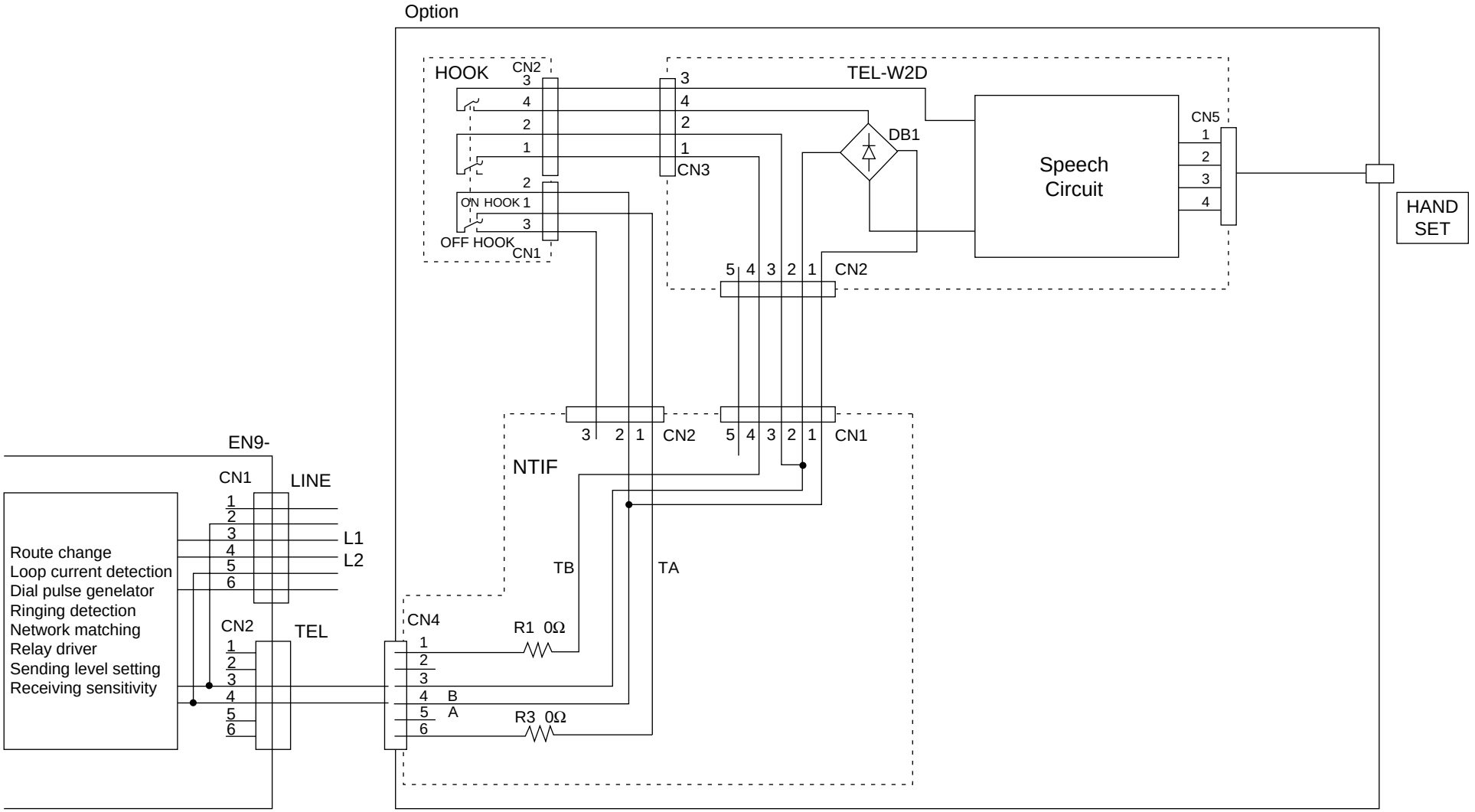

Figure 3.39 Relationship between EN9- and TEL-W2D for FTZ Version

APPENDIX B DESCRIPTIONS OF PRINT OPERATION

1. Mechanical Components

1) EP drum cartridge
The EP (image) cartridge consists of an EP (image) drum, a charger, and a developer. The cartridge forms a toner image on the drum, using an electrostatic latent image formed by the LED print head.

2) Resist motor
This resist motor is a pulse motor of 48 steps/rotation that is two-phase excited by the signal from the M60 board. It drives the hopping roller and the resist roller via two one-way clutches according to the direction of rotation.

3) Drum motor
This drum motor is a pulse motor of 48 steps/rotation that is two-phase excited by the signal from the M60 board and is the main motor of this mechanism.

4) LED head
Image data for each dot on a line from the M60 board is received by the shift registers and latch registers. The Letter size LED head are driven to radiate the image data on to the EP (image) drum.

5) Fuser
The fuser consists of a heater, a heat roller, a thermister and a thermostat.

An AC voltage from the power supply board is applied to the heater under the control of the HEAT-N signal from the M60 board. This AC voltage heats the heater. The M60 board supervises the heat roller temperature via the thermistor, and regulates the heater roller at a predetermined temperature (about 185 ½C) by connecting or disconnecting the AC voltage supply to the heater.

If the heater roller temperature rises abnormally, the thermostat of the heater voltage supply circuit is activated to cut off the AC voltage supply forcibly.

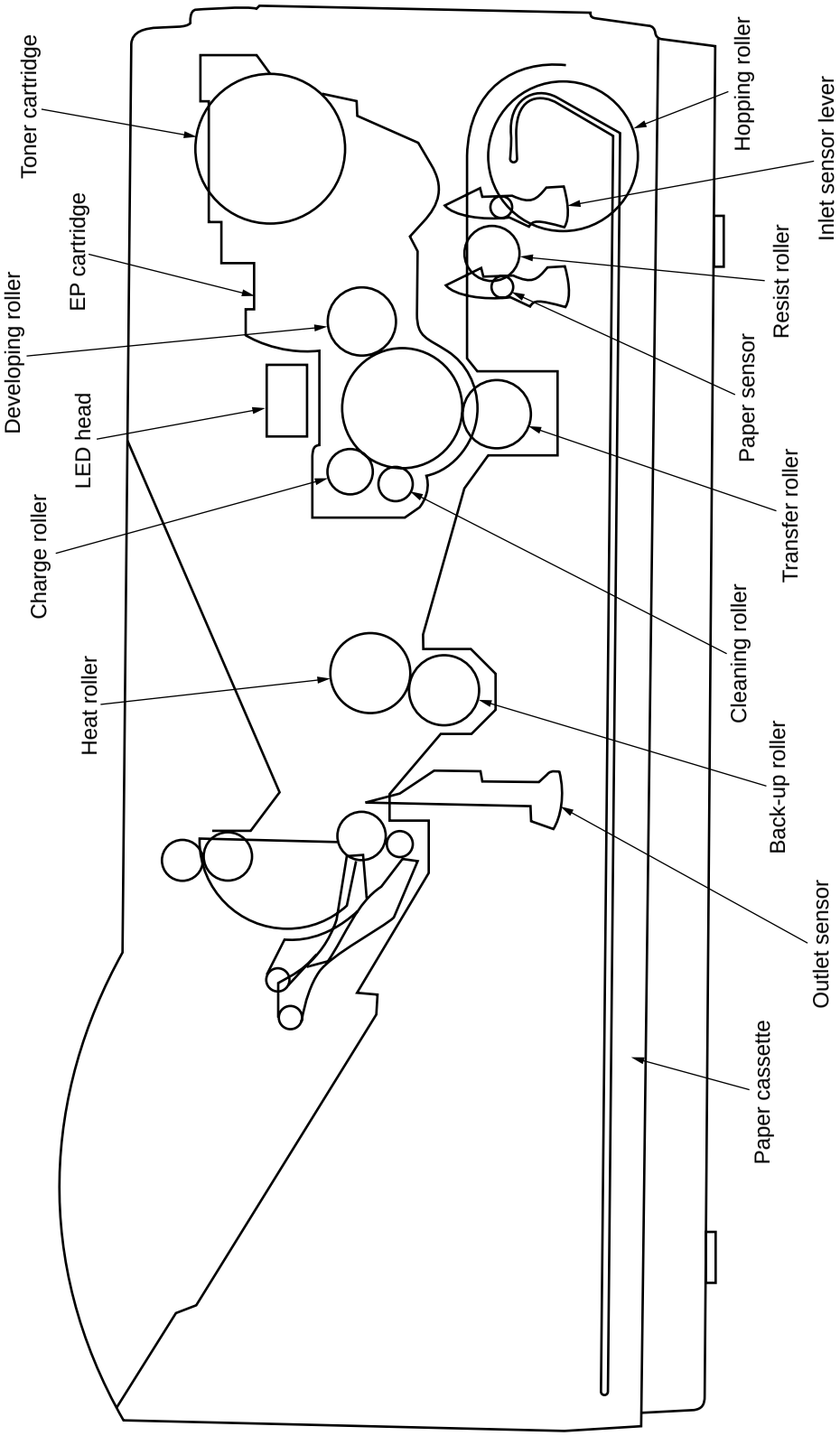

Figure 1.1 Layout of Print Station Components

2. Description of Print Operations

2.1 Process Operations

1) Hopping and feeding

Hopping and feeding are affected by a single resist motor in the mechanism shown below.

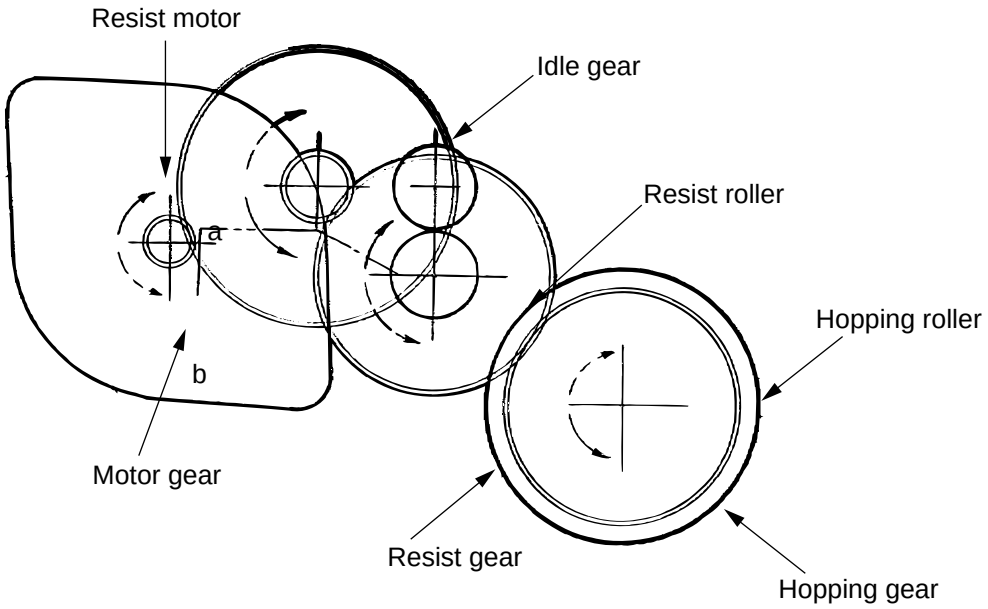

Turning the resist motor in the "a" direction drives the hopping roller. Turning the resist motor in the "b" direction drives the resist roller. The resist gear and hopping gear contain one-way clutch, so that turning each of these gears in reverse direction will not be transmitted to the corresponding roller.

(a) Hopping

1 Hopping turns the resist motor in the "a" direction (in the CW direction) and drives the hopping roller to advance the paper until the inlet sensor turns on. (In this case, the resist gear also turns, but the resist roller is prevented from turning by the one-way clutch gear.)

2 After the paper has turned on the inlet sensor, the paper is further advanced by a predetermined length until the paper hits the resist roller. (The skew in the paper can thus be corrected.)

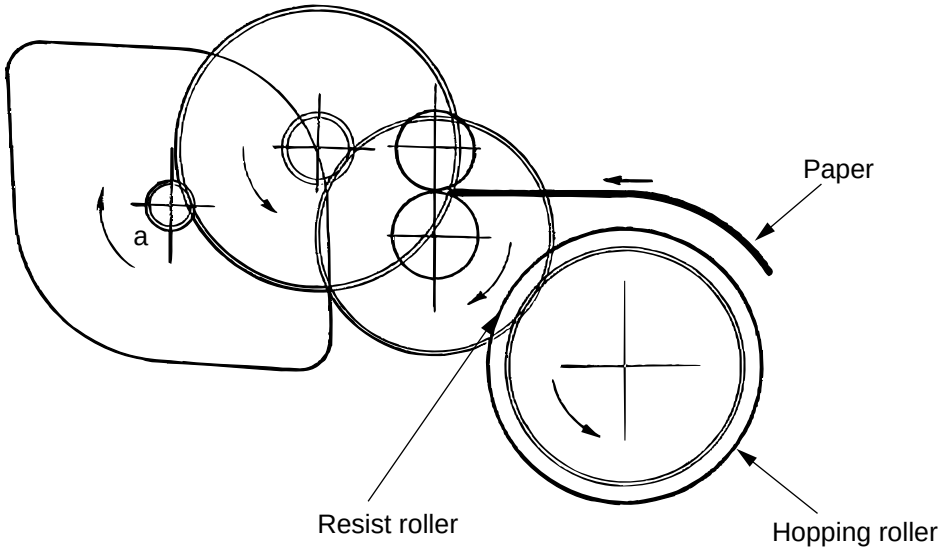

CW = Clockwise

(b) Feeding

1 After end of hopping, turning the resist motor in the "b" direction (in the CCW direction) drives the resist roller to advance the paper. (In this case, the hopping gear also turns, but the hopping roller is prevented from turning by the one-way clutch gear.)

2 The paper is further advanced in synchrony with the print data.

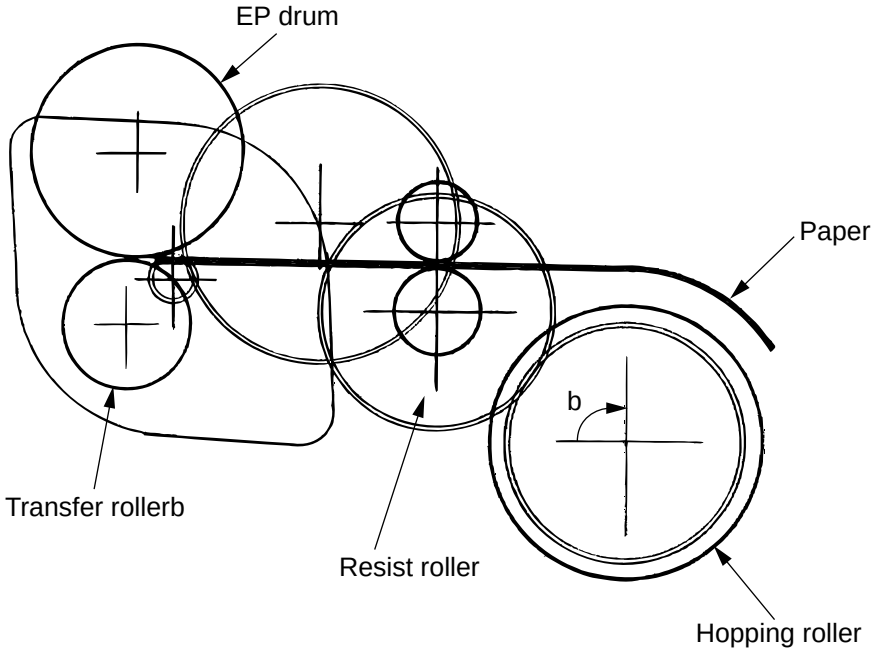

CCW = Counterclockwise

2) Charging

Charging is affected by applying a DC voltage to the charge roller thta is in contact with the EP (image) drum surface.

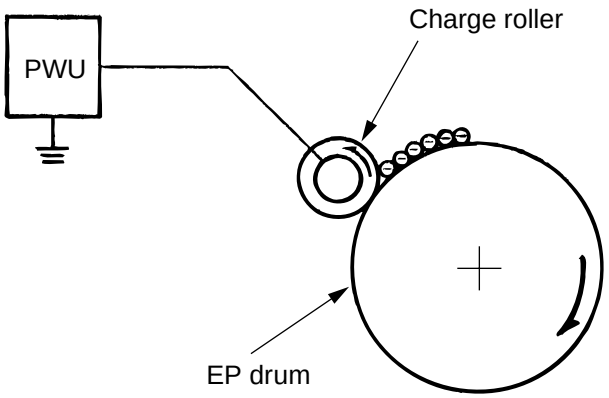

The charge roller is composed of two layers consisting of a conductive layer and a surface protective layer that has elasticity, in order to secure a good contact with the EP (image) drum. When the DC voltage (-1.35 KVDC) applied from the Power Supply Unit exceeds a threshold value, charging begins. The applied voltage is proportional to charge potential with off set of approx. -550V.

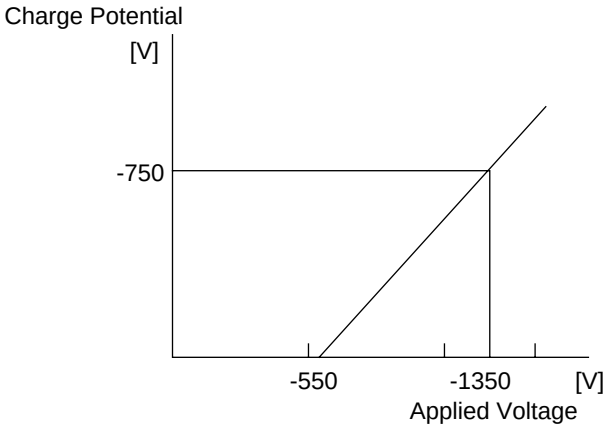

3) Exposure

Light emitted from the LED head irradiates the EP (image) drum surface with negative charges. The surface potential of the irradiated part of the EP drum drops, thereby forming an electrostatic latent image associated with the image signal.

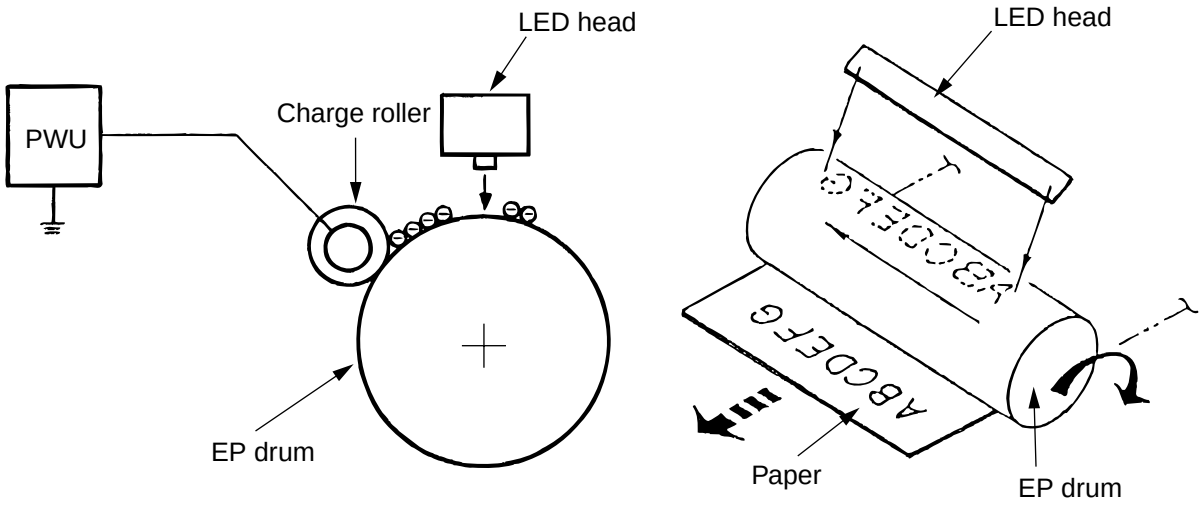

The EP (image) drum is coated with an underlayer (UL), a carrier generation layer (CGL), and carrier transfer layer (CTL) on the aluminum base. The organic photo conductor layer (OPC), comprising a CTL and a CGL, is about 20 mm thick.

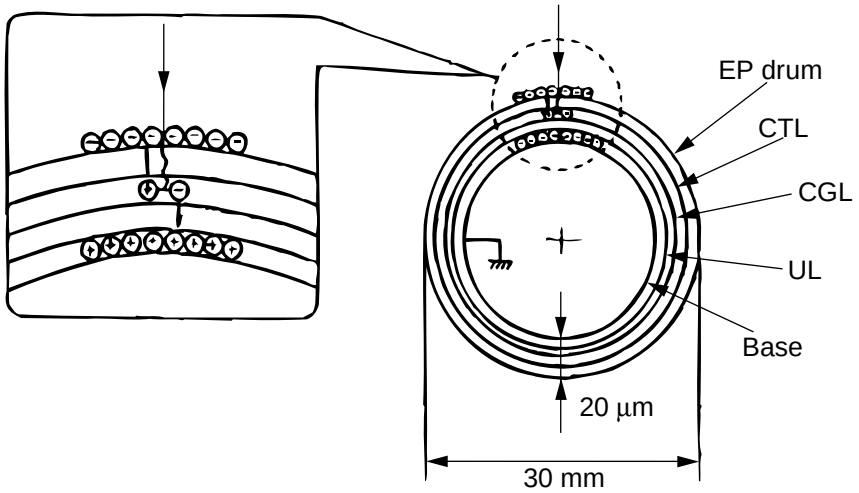

The EP (image) drum surface is charged to about -750 V by the contact charge of the charge roller.

When light from the LED head irradiates the EP (image) drum surface, the light energy generates positive and negative carriers in the CGL. The positive carriers are moved to the CTL by an electrical field acting on the EP (image) drum. Likewise, the negative carriers flow into the aluminum layer (ground).

The positive carriers moved to the CTL combine with the negative charges on the EP (image) drum surface accumulated by the contact charge of the charge roller, lowering the potential on the EP (image) drum surface. The resultant drop in the potential of the irradiated part of the EP (image) drum surface forms an electrostatic latent image on it. The irradiated part of the EP (image) drum surface is kept at about -100 V.

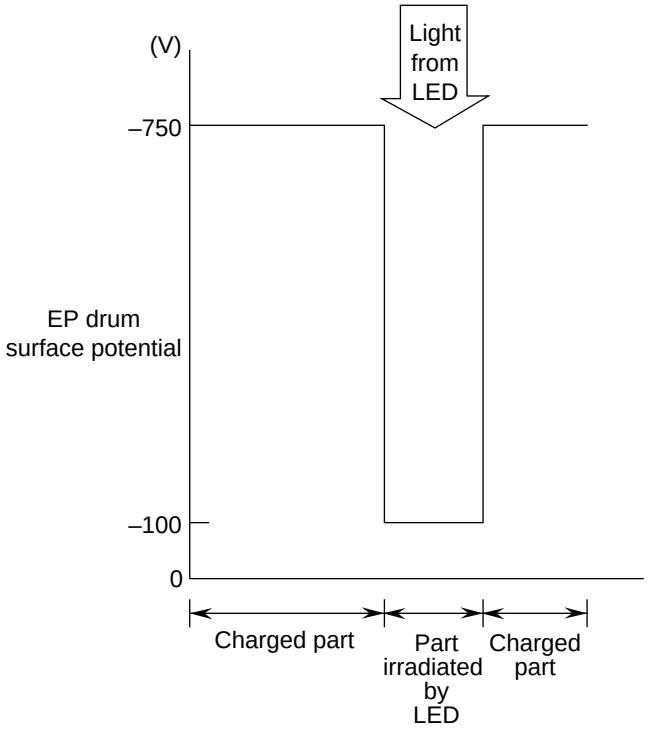

4) Developing

Toner is attracted to the electrostatic latent image on the EP (image) drum surface to convert it into a visible toner image. Developing takes place at the contact between the EP (image) drum and the developing roller.

1 As the toner supply roller rotates while rubbing on the developing roller, a friction charge is generated between the developing roller and the toner, allowing the toner to be attracted to the developing roller. (The developing roller surface is charges positive and the toner, negative.)

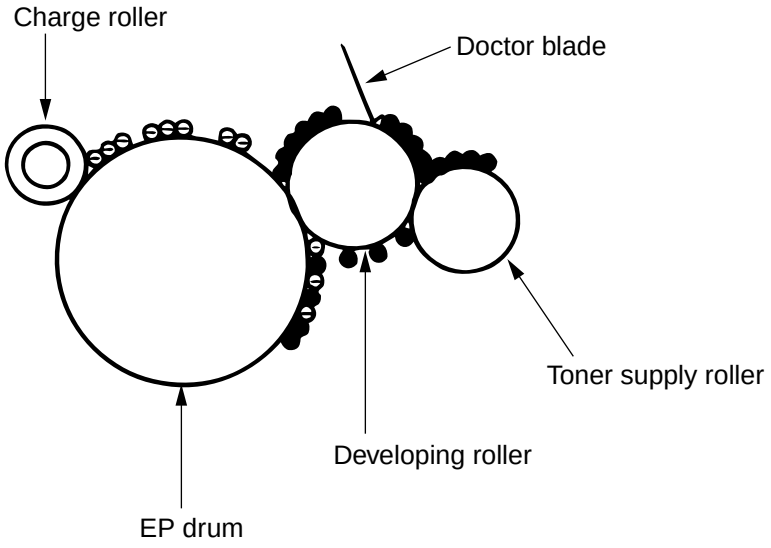

2 The toner attracted to the developing roller is scraped off by the doctor blade, forming a thin coating of toner on the developing roller surface.

3 Toner is attracted to the exposed part (low-potential part) of the EP (image) drum at the contact between the EP (image) drum and the developing roller, making the electrostatic latent image visible.

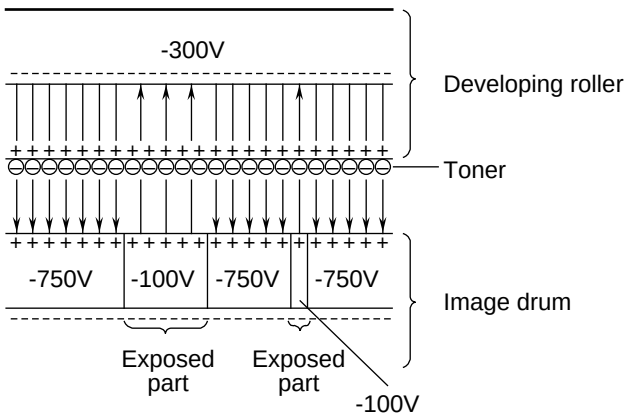

An illustration of activities at the contact point of the image drum surface and the developing roller (arrow marks denote the direction of the electric field).

Note: The toner supply roller and the developing roller are supplied with bias voltages required during the developing process as shown below. -450 VDC is supplied to the toner supply roller, -300 VDC to the developing roller.

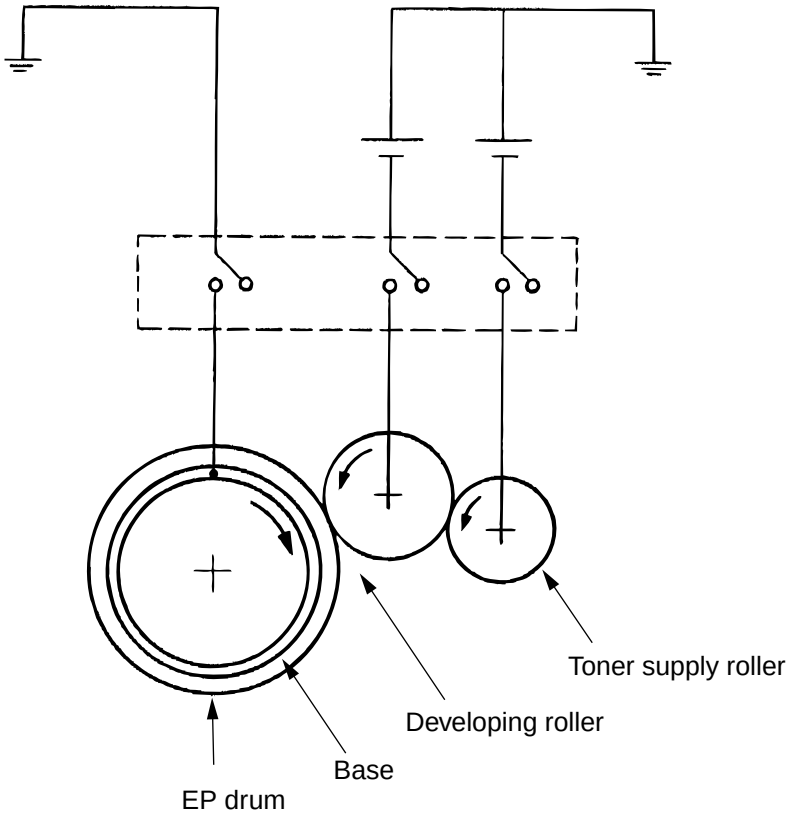

5) Transfer

The transfer roller is composed of conductive sponge material and is designed to make the EP (image) drum surface and the paper closely into contact.

Paper is placed over the EP (image) drum surface, and a positive charge, opposite in polarity to the toner, is applied to the paper from its reverse side.

The application of a high positive voltage (+1 KVDC) from the Power Supply Unit (1VP/2VP board) to the transfer roller causes the positive charge induced on the transfer roller surface to be transferred to the paper at the contact between the transfer roller and the paper. As a result, toner charged negative that is attracted to the EP (image) drum surface is transferred to the upper side of the paper by the positive charge on the lower side of the paper.

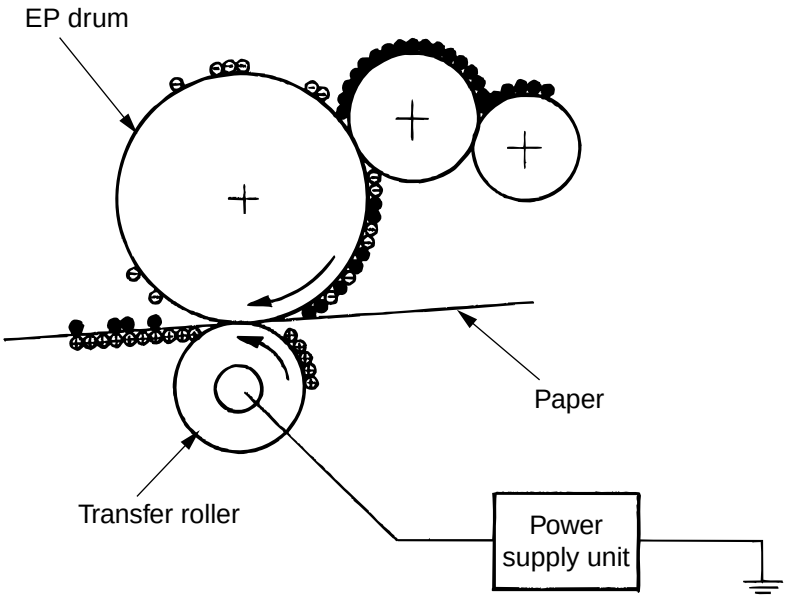

6) Fusing

After the end of the transfer operation, the unfused toner image is fused on the paper under heat and pressure as it passes between the heater roller and the back-up roller. The heater roller with a Teflon coating incorporates a 500 W heater (Halogen lamp), which heats the heat roller.

A thermister, which is in contact with the heater roller, regulates the heater roller at a predetermined temperature (about 185 ½C for OKIFAX 5000 series). A safety thermostat cuts off voltage supply to the heater by opening the thermostat in the event of abnormal rise in temperature.

The back-up roller is held under a pressure of 2.5 kg by the pressure spring at each side.

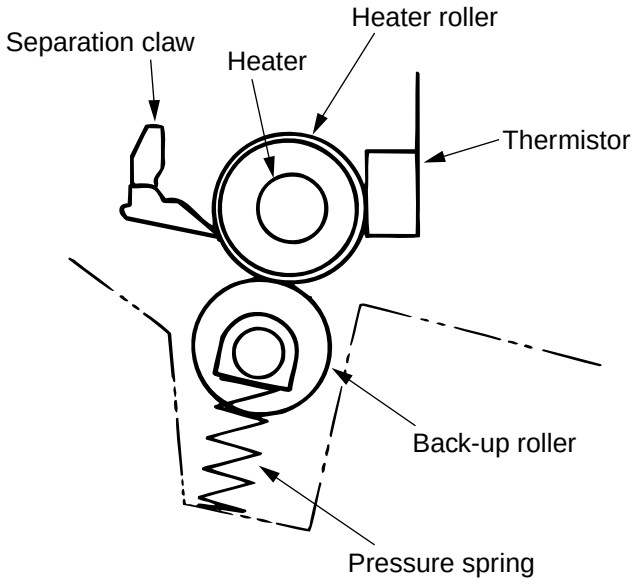

7) Cleaning

After the end of the transfer, residual toner on the EP (image) drum is attracted to the cleaning roller temporarily by static electricity to clean the EP (image) drum surface.

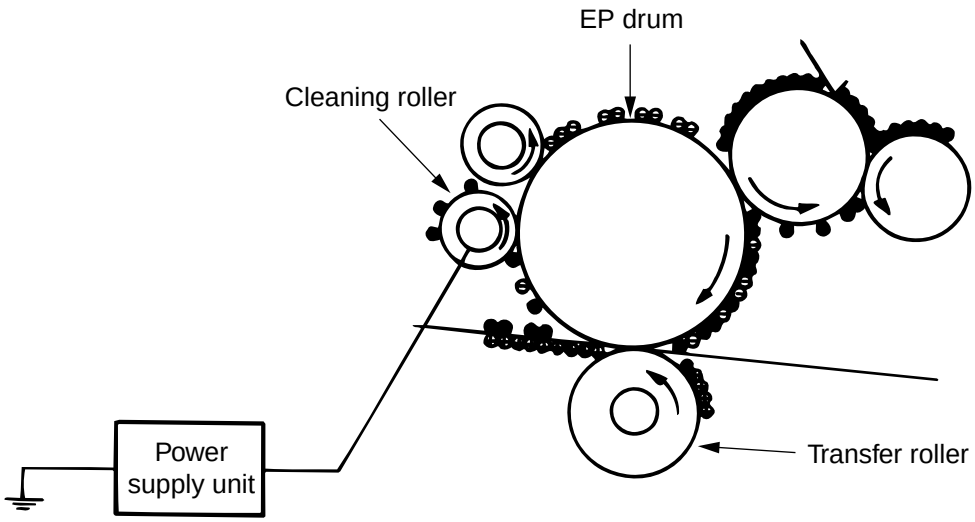

8) Cleaning of rollers

The charge roller, transfer roller and cleaning roller are cleaned in the following cases:

- In warning up at power-on time
- In warning up after the cover is opened and closed
- When the number of accumulated sheets is 10 or more and the printout operation ends

Changes in bias voltage applied to each roller move adhesive toner from the roller to the EP (image) drum and return it to the developer.

	Cleaning "NO" (V)	Cleaning "YES" (V)
DB+	—	+300 V
DB-	-300 V	-300 V
TR+	+1000 V	+1000 V
TR-	—	-750 V
CB (cleaning)	+400 V	+400 V
CH-	-1350 V	-1350 V

3. Errors

3.1 Errors List

The errors are listed below.

1) Major trouble errors
   - Fuser error
   - Fan error
   - Paper supply error
   - Paper transport system error
   - Paper exit jam
   - Paper size error
   - 2'nd tray communication error
   - Cover open

2) Recoverable errors
   - 2'nd tray route open
   - No cassette in 2'nd tray
   - No paper in 1'st cassette
   - No paper in 2'nd cassette

3) Alarms (warning)
   - Low toner
   - Paper width error

Note: ***1.*** The major trouble errors do not recover after an error has been removed unless a reset is not performed.
2. A recoverable error resets automatically by itself once the cause of error has been removed. Printing is not possible while an error is existing.
3. The alarm serves as a warning only and the printing operation is performed.

3.2 Major Trouble Errors

3.2.1 Fuser Error

The fuser error indicates an error in thermister on heater.
In case the fuser error occurs at the time of printing, the heater is turned off soon but the printing continues of that page.
However, if the error occurs before the write sensor is turned on, the motor stops soon.

3.2.2 Fan Error

The fan error is generated when the FANSNS signal lead goes "1" while the fan is running at full speed. Operation of the FANSNS signal when the fan is turned on is described below.

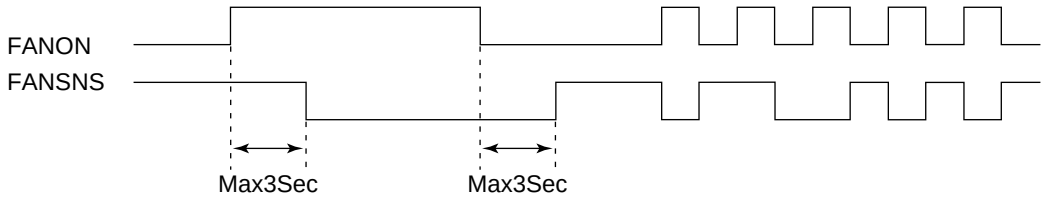

Since the fan alarm is not monitored during printing, the fan alarm does not appear from the moment the printing is started until the completion of printing operation.
In other words, the printing will continue even if the fan alarm occurs during printing.

3.2.3 Paper Feed Monitoring

Status	Description and Supervising Sensor	Distance
Paper supply error	Indicates monitoring error in hopping. Hopping is retried 3 times.	118 mm or less path Length +36 (hopping) × 3
Transport system jam 1	Indicates an error in the paper transport path. Error on resist roller section. From resist ON to write sensor (PS2) ON.	30 mm or less Inlet ~ write +20
Transport system jam 2	From inlet sensor OFF up to write sensor OFF.	44 mm or less
Transport system jam 3	Indicates an error in the paper transport system. Error of transfer roller and/or heat roller. From write sensor ON to outlet sensor ON.	207 mm or less Write ~ outlet +69
Paper size error	Indicates paper size other than specified one. From resist ON to inlet sensor OFF.	Recording paper +/- 45 mm
Paper outlet jam 1	Supervises slipping of the recording paper. From outlet sensor ON to OFF.	Recording paper +/- 45 mm
Paper outlet jam 2	Supervises jamming at the near paper outlet. From outlet sensor ON to OFF. When a crumpled recording paper is detected, the outlet sensor is set to "OFF" earlier than usual.	135 mm or less: NG

3.2.4 2'nd Tray Communication Error

This error is generated if on sending a command to the 2'nd tray is returned no-status (40s) or an undefined status. However, in case there is no status when reset, it will be considered that the 2'nd tray is not mounted.

3.2.5 Cover Open

Cover open sensor "0" indicates an open cover.
When the cover is closed the CU (control unit) section sends the reset signal and processes in the same way as if the power has been turned on.

3.3 Recoverable Errors

The three recoverable errors are listed in the table below.

Status	Description and Supervising Sensor
2'nd tray route open	Paper supply route from the option 2'nd tray to the main body is open, recording paper of the 1'st tray is being replaced.
No paper in 1'st cassette	No paper has been detected by the 1'st tray's paper sensor. No paper has been detected by paper sensor in "1" state.
No paper in 2'nd cassette	Response from the option tray indicated no paper in 2'nd tray.

3.3.1 Toner Low Detection

- Composition
  The device consists of the stirring gear which rotates at a constant rate, the stirring bar and the magnet on the stirring bar. The stirring bar rotates through the link on the protrusion in the stirring gear.

  The configuration of stirring bar in the figure below may differ. The principle of toner detection, however, remains the same.

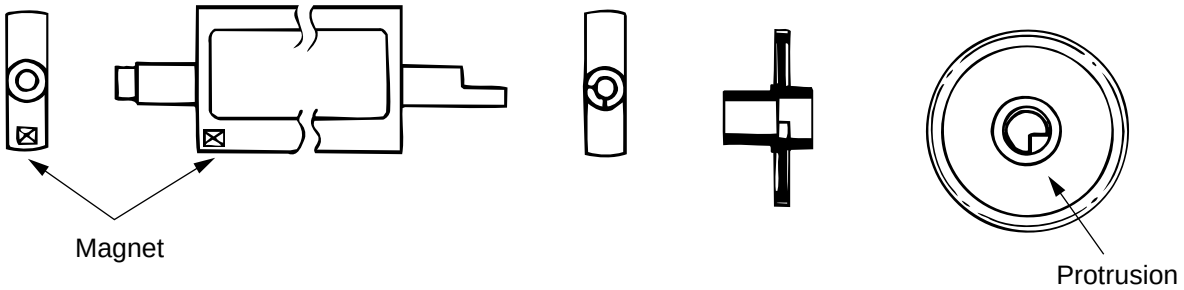

Stirring Bar Stirring Gear

- Operation
  Toner Low is detected by monitoring the time interval between the encounter of the magnet set on the sensor lever and the magnet on the stirring bar.

Operation during toner full state

- The stirring bar rotates due to interlocking with the stirring gear.
- Even when the magnet on the stirring bar reaches the maximum height, since theother side is being dipped in the toner, the stirring bar is pushed by the stirring gear.

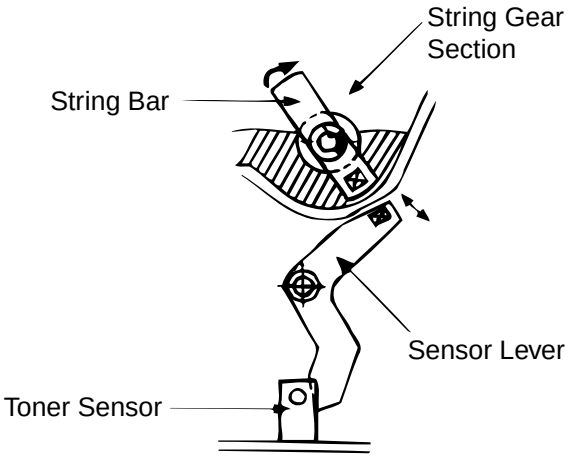

Operation during toner low state

- When the stirring bar reaches the maximum height, since there is no resnstance provided by the toner on the other side, it falls to the minimum height due to its own weight. Because of this, the time interval during which it is in encounter with themagnet of the sensor lever becomes long. By monitoring this time interval, toner low can be detected.

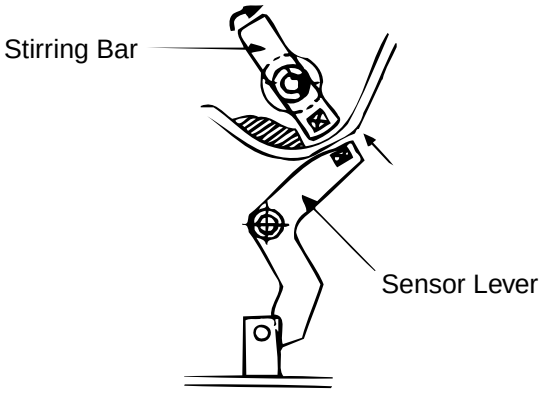

Low Toner Alarm

A check for low toner is carried out at all times when the drum is rotating (rotation in opposite direction is excluded).

- The toner sensor is not monitored while the drum motor is in halt.

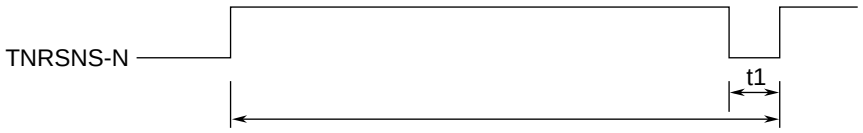

TONER FULL state
TONER LOW state

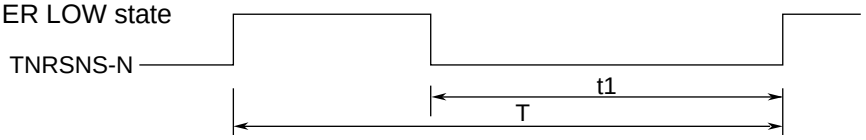

- When the toner low state is detected 2 times consecutively, Toner Low is established.
- When the toner full state is detected 2 times consecutively, Toner Low is cancelled.
- When there is no change with the toner sensor for 2 cycles (6.5 sec. x 2) or more, then the Toner Sensor Alarm is activated.

Printing Speed	T	t1 (Toner Exists)	Remarks
8 ppm	3.2 sec.	0.16 ~ 1.00 sec.	OKIFAX 5000 series

4. Other Special Cases

4.1 Manual Paper Feed

Turning on of the inlet sensors without the hopping operation indicates manual paper feeding for OKIFAX 5650 (excluding when power is on).

4.2 Cleaning

The image drum needs cleaning since it gets dirty after having printed copies for a number of times.

The two kinds of cleaning are listed in the table below:

Cleaning Type	Function	Remarks
Cleaning	This cleaning removes the toner whose electric potential is reversed due to poor electrification, or removes the toner whose electric potential is insufficient on the image drum surface. (Recovery of the toner to developing roller)	Cleaning is performed when the number of prints exceed 10 sheets or the one-job operation ends. (At the end of communication or copy operations)
CH (charge roller) cleaning	This cleaning removes the residual toner on the charging roller surface. The toner is removed by moving to the recording paper from charging roller and image drum.	User operation

APPENDIX C CIRCUIT DIAGRAMS AND BLOCK DIAGRAMS

M60-PCB Circuit Diagram (1/13~13/13)	(41178301SS)
P60-PCB Circuit Diagram (1/2~2/2)	(41178601SS)
MPW1561 POW(120VAC) Circuit Diagram (1/1)	(S1PS1433)
MPW1461 POW(230VAC) Circuit Diagram (1/1)	(S1PS1432)
H08-PCB Circuit Diagram (1/1)	(41144801SS)
MEM-PCB Circuit Diagram (1/1)	(QAS-12175)
TQSB-PCB Circuit Diagram (1/1)	(3SS5505-3362Z001)
CTT-PCB Circuit Diagram (1/1)	(41360801SS)
EN9-PCB Circuit Diagram (1/2~2/2)	(41144301SS)
INU-PCB Circuit Diagram (1/1)	(41144501SS)
G4N-PCB Circuit Diagram (1/7~7/7)	(41033701SS)
TEL-U-PCB Block Diagram (1/1) TEL-U-PCB Circuit Diagram (1/1)	(3SS5003-6262)
TEL-W1-PCB Block Diagram (1/1) TEL-W1-PCB Circuit Diagram (1/1)	(3SS3528-1006)
TEL-W2-PCB Block Diagram (1/2~2/2) TEL-W2-PCB Circuit Diagram (1/1)	(3SS3528-1007)
TEL-W2D-PCB Block Diagram (1/1) TEL-W2D-PCB Circuit Diagram (1/1)	(3SS3528-1016)
TEL-W2F-PCB Circuit Diagram (1/1)	(3SS3528-1035G007)
NTIF-PCB Circuit Diagram (1/1)	(3SS5003-6261)
TEN KEY-PCB Circuit Diagram (1/1)	(3SS5003-6260)
HOOK-PCB Circuit Diagram (1/1)	(3SS5003-6263)

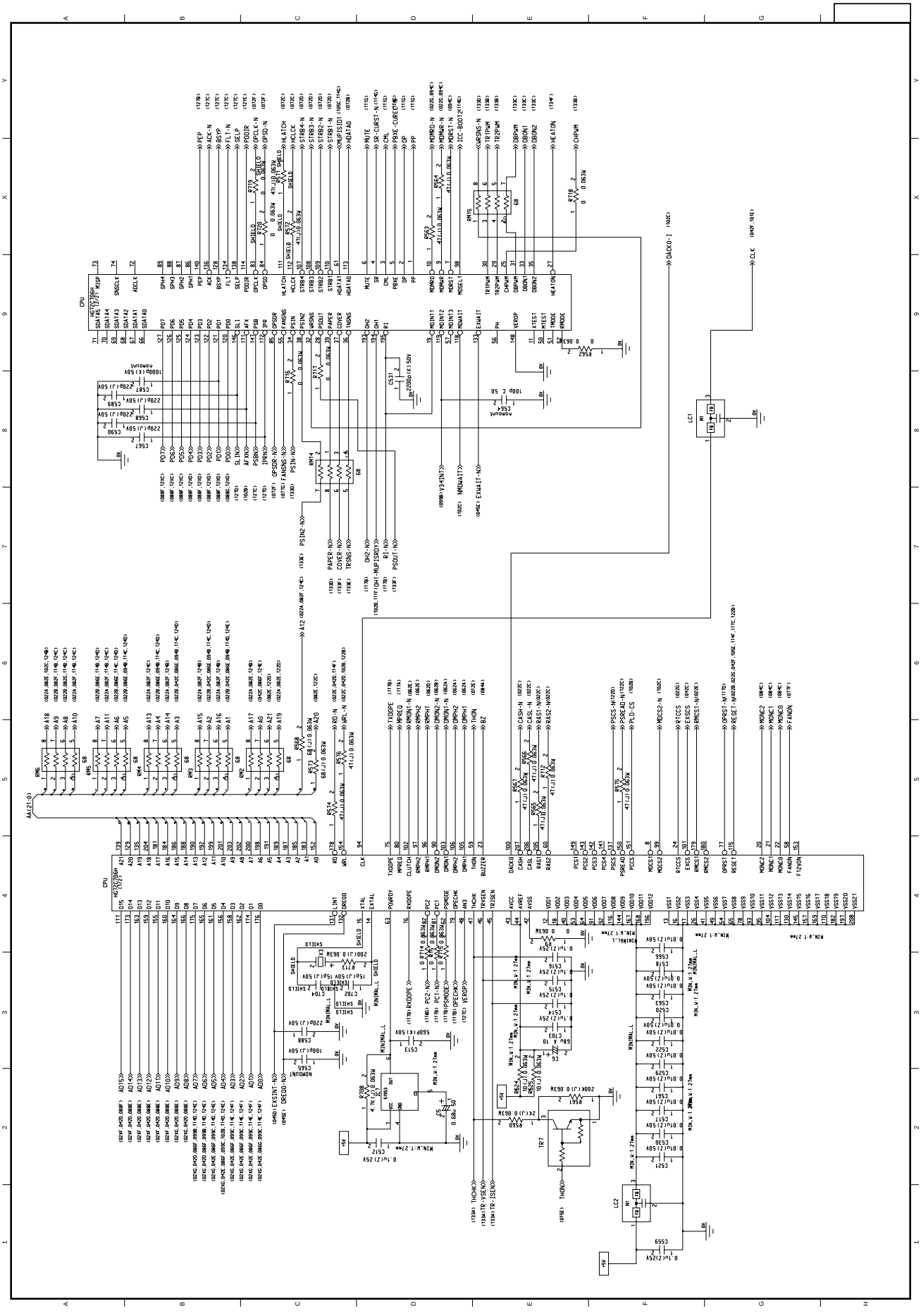

M60-PCB Circuit Diagram (1/13)
(41178301SS)

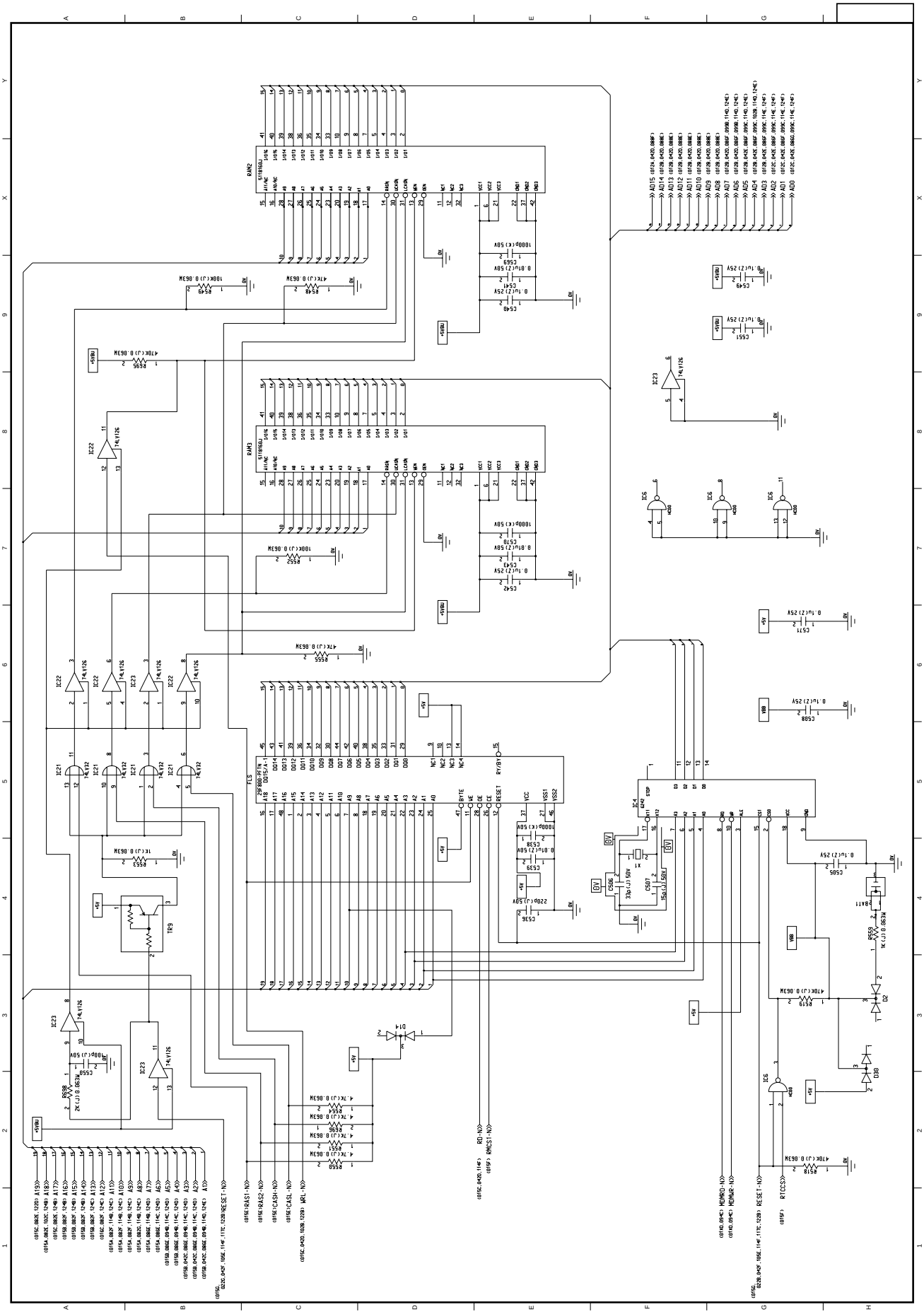

M60-PCB Circuit Diagram (2/13)
(41178301SS)

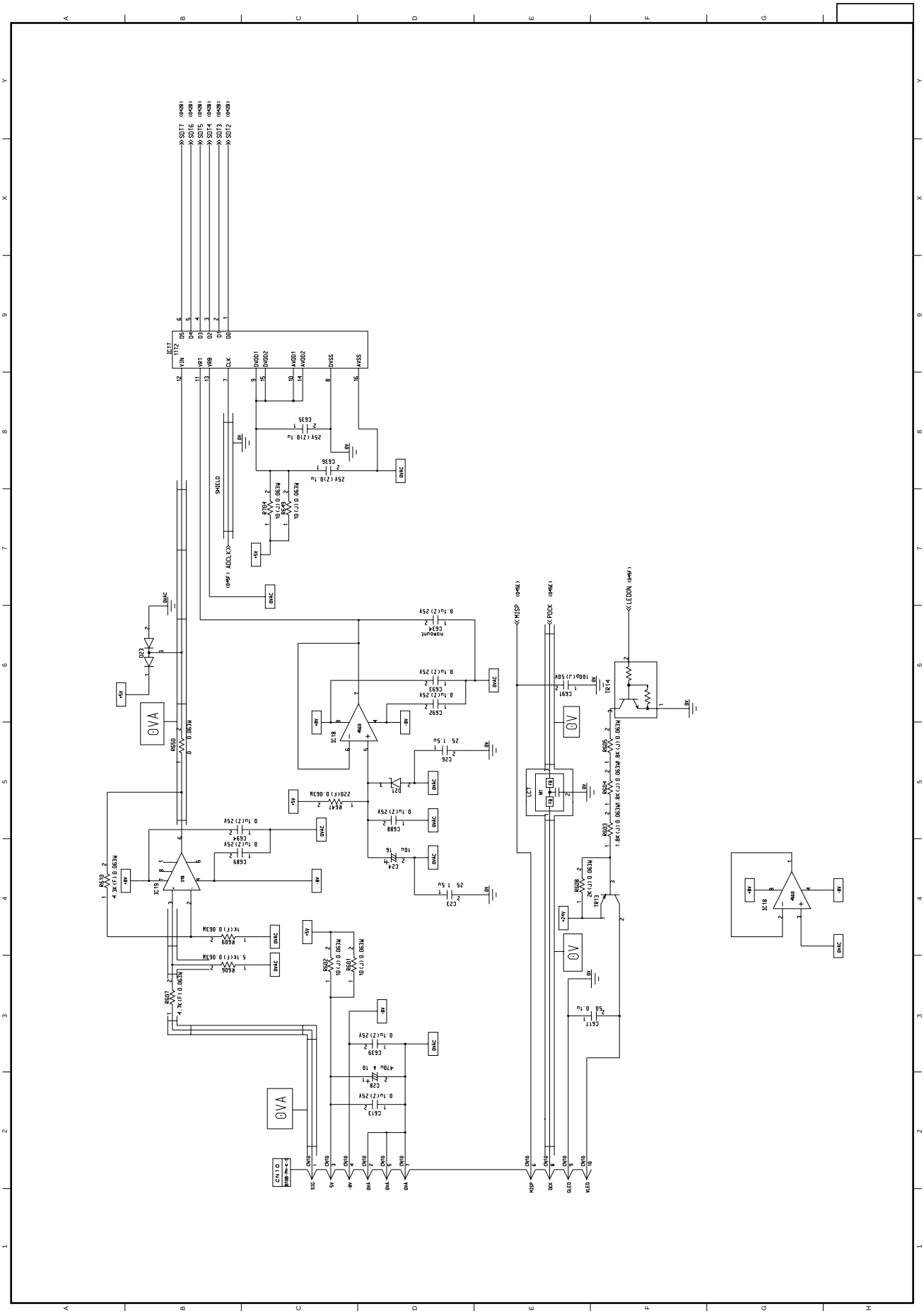

M60-PCB Circuit Diagram (3/13)
(41178301SS)

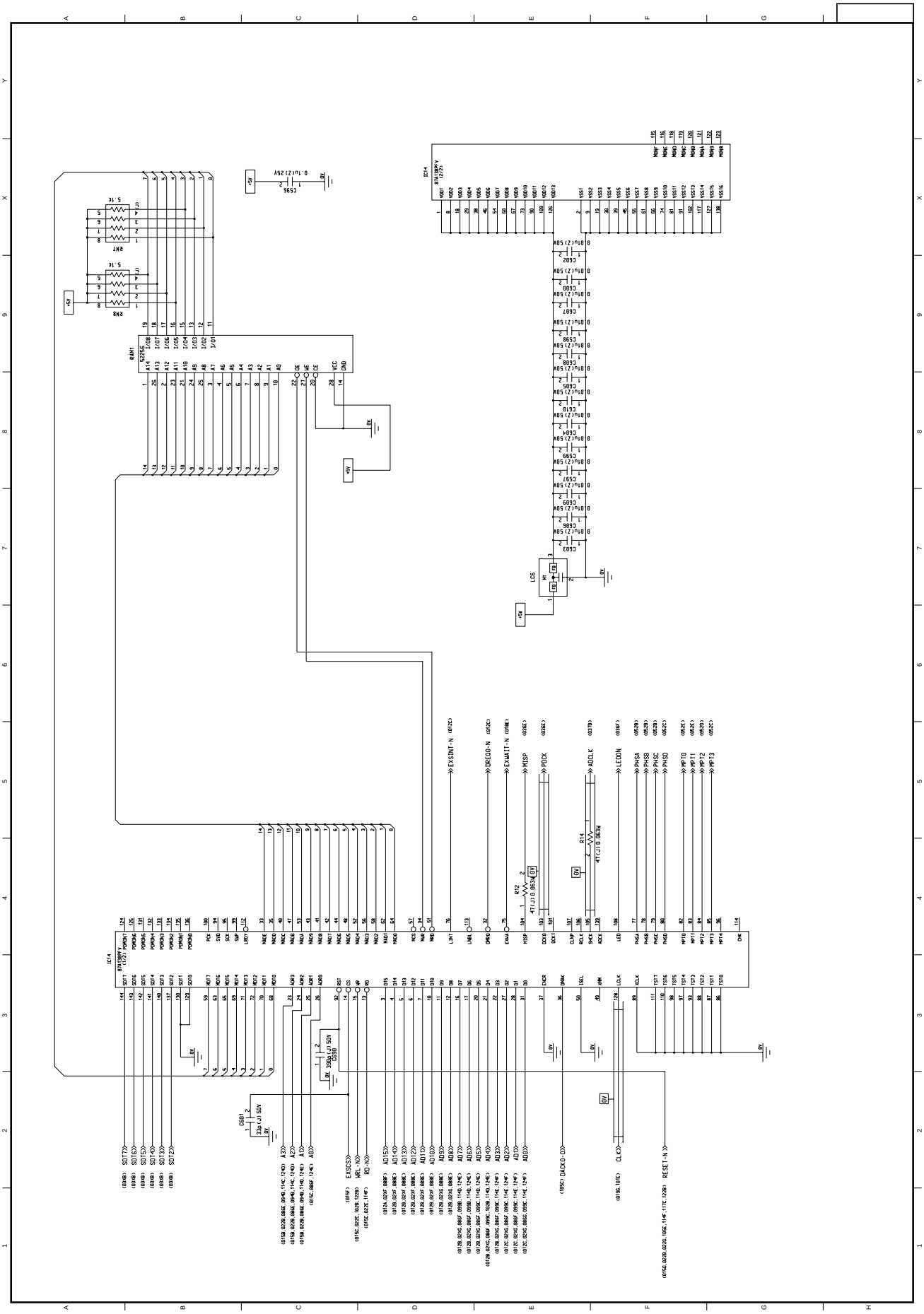

M60-PCB Circuit Diagram (4/13)
(41178301SS)

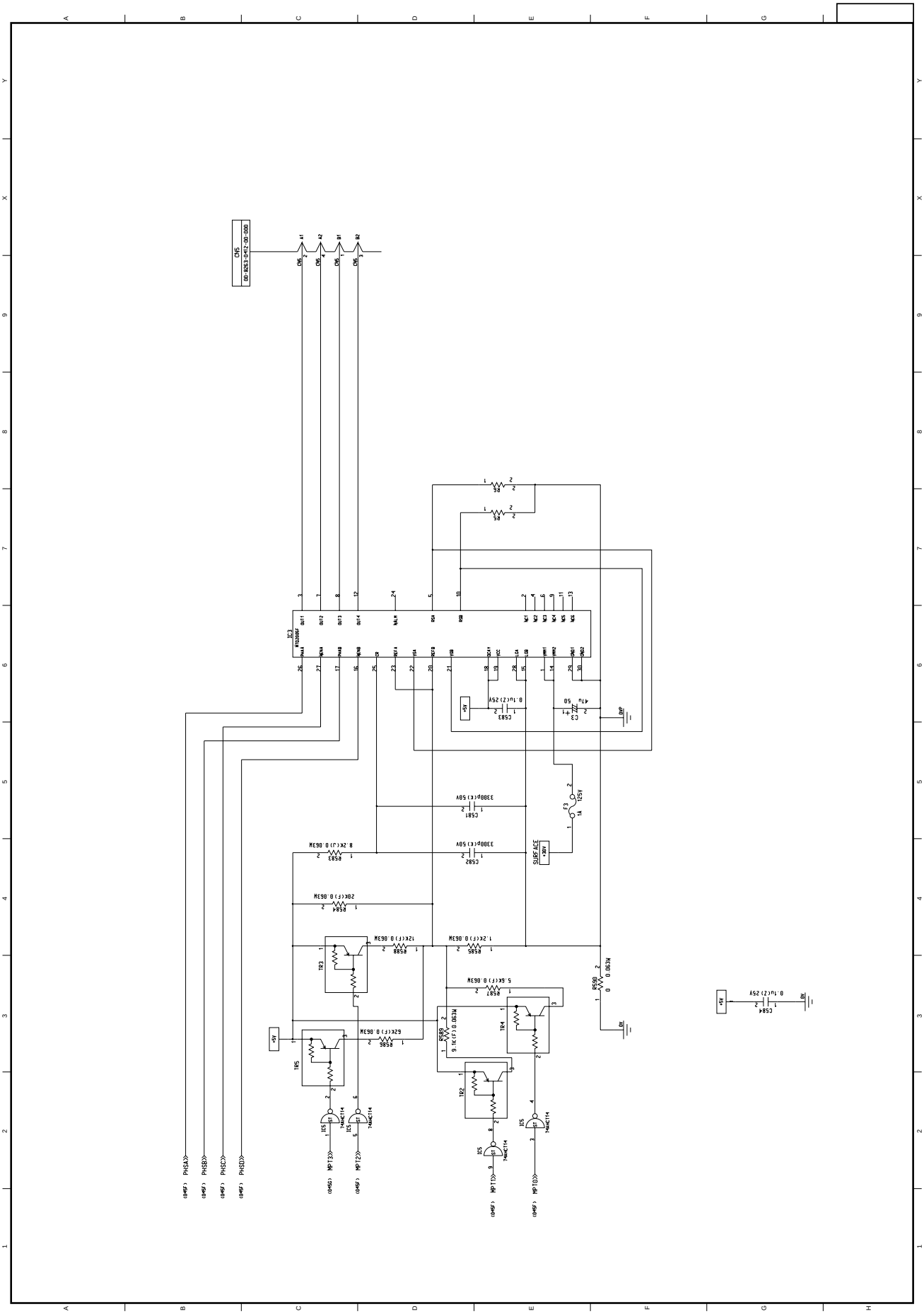

M60-PCB Circuit Diagram (5/13)
(41178301SS)

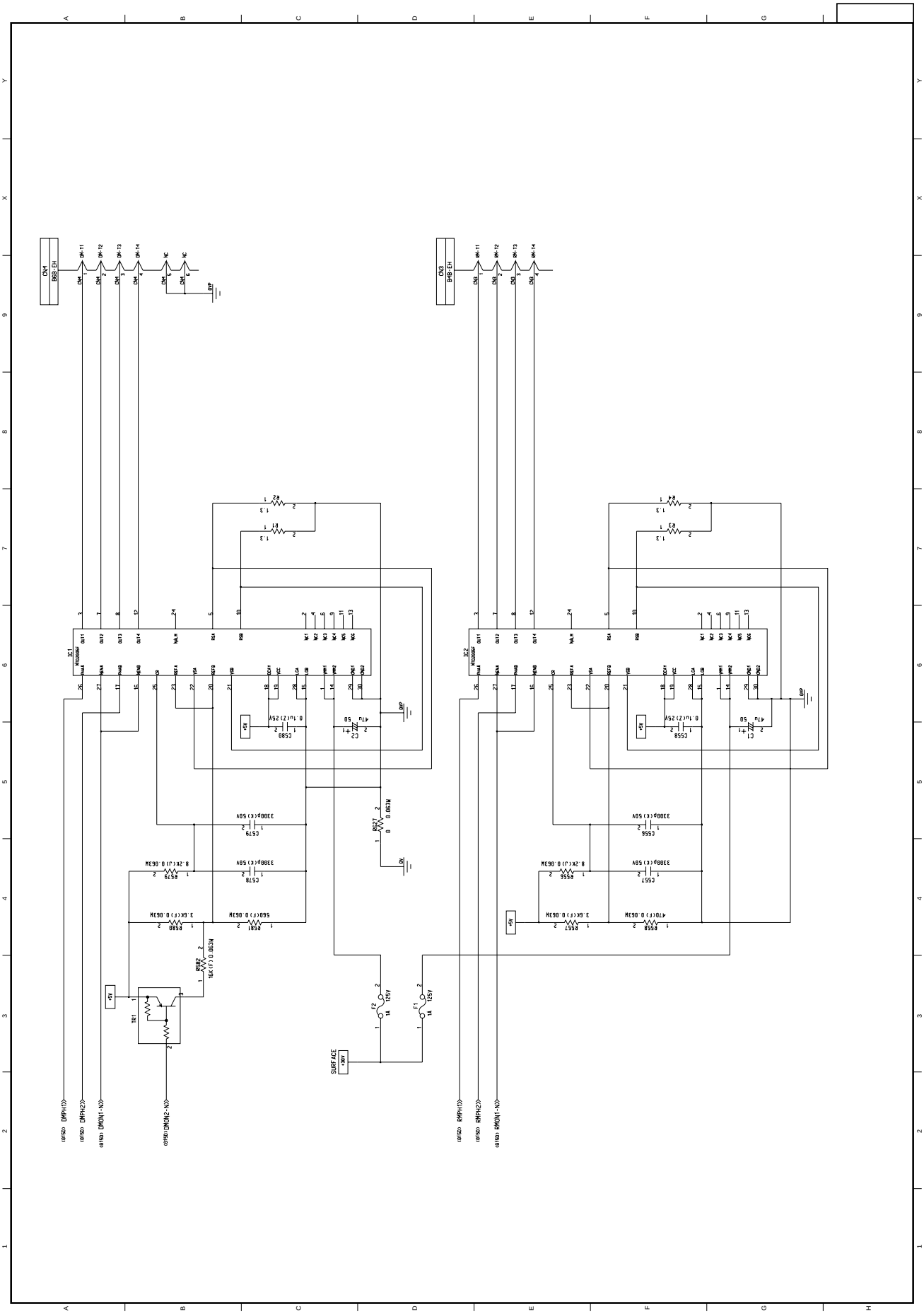

M60-PCB Circuit Diagram (6/13)
(41178301SS)

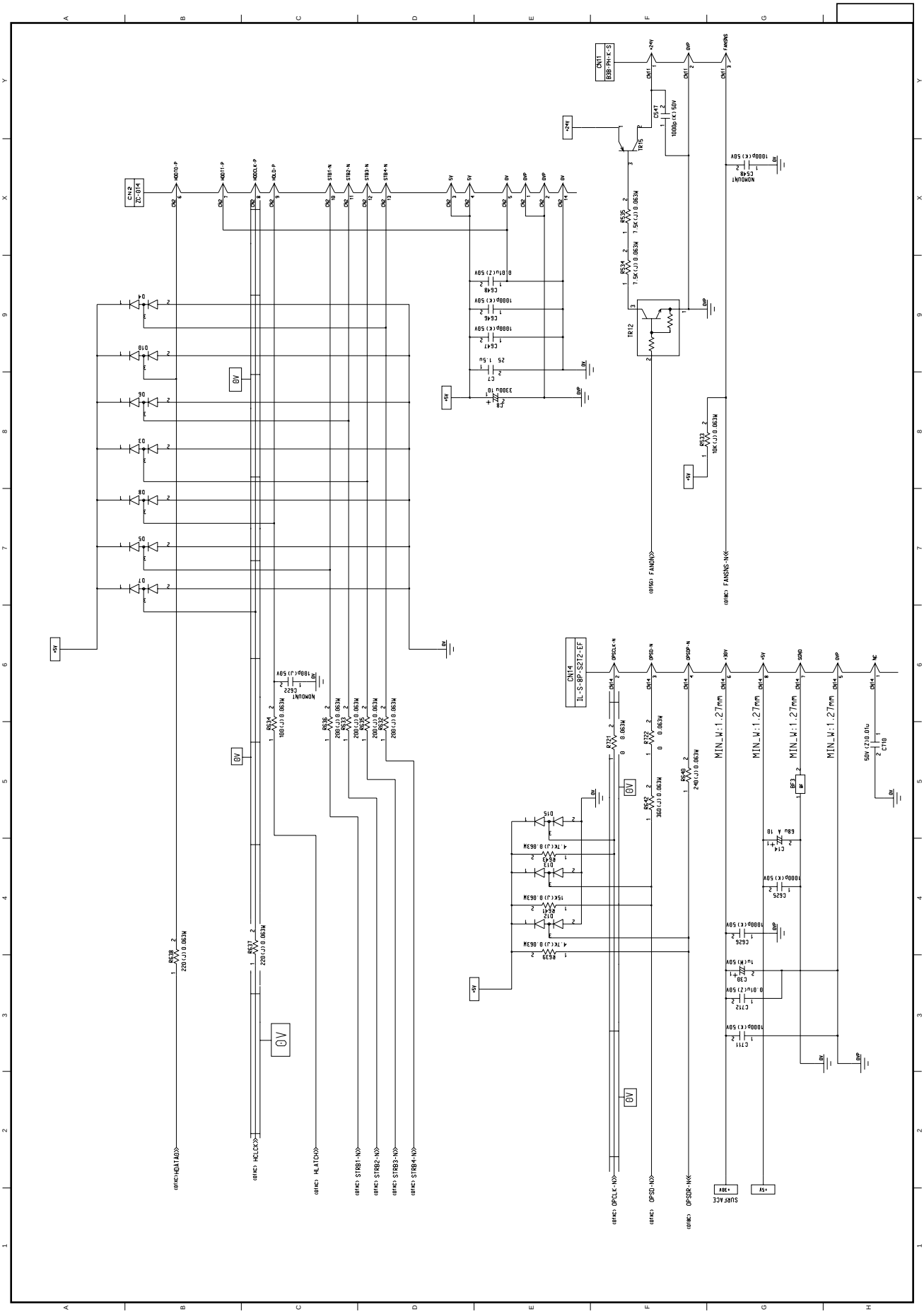

M60-PCB Circuit Diagram (7/13)
(41178301SS)

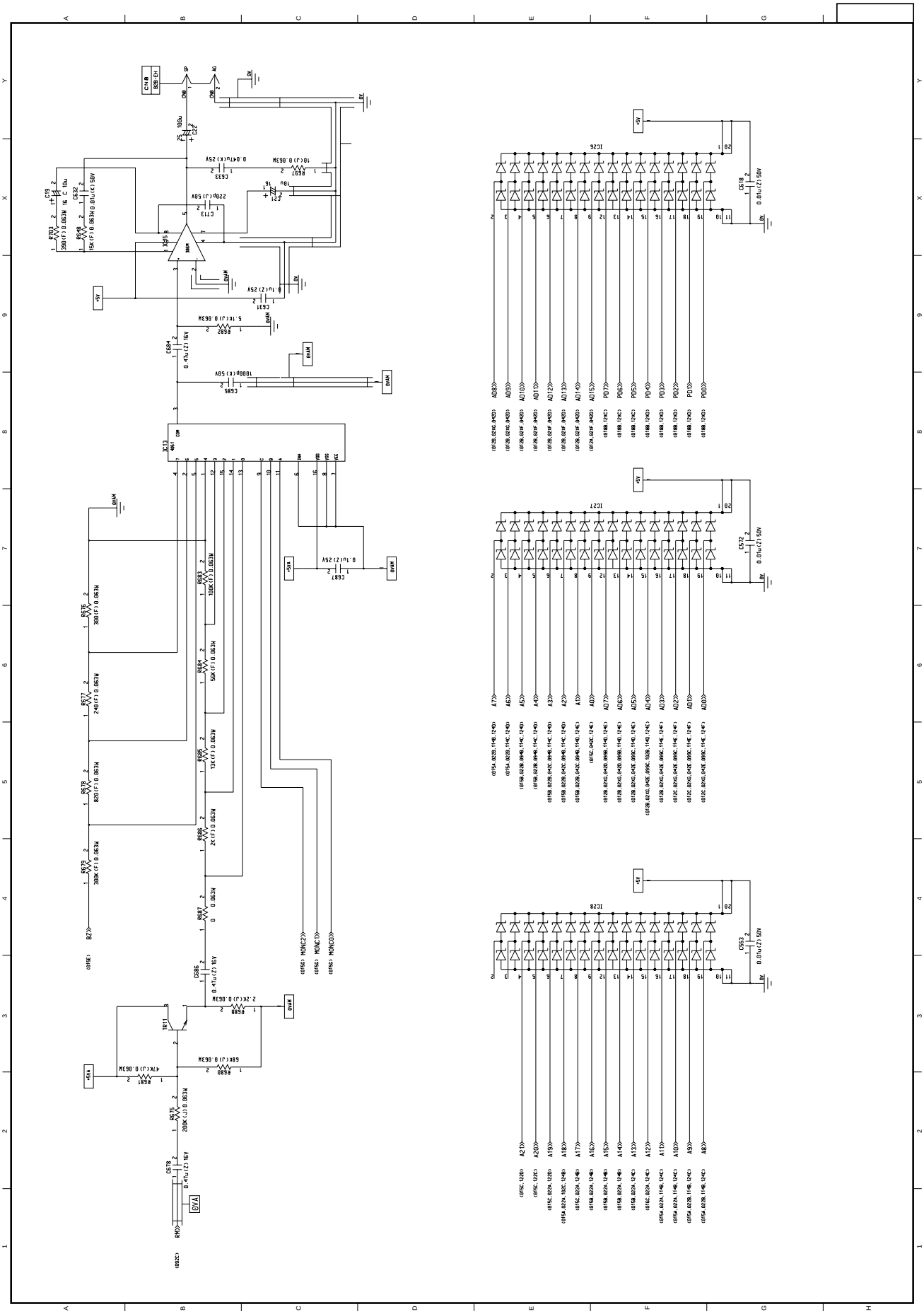

M60-PCB Circuit Diagram (8/13)
(41178301SS)

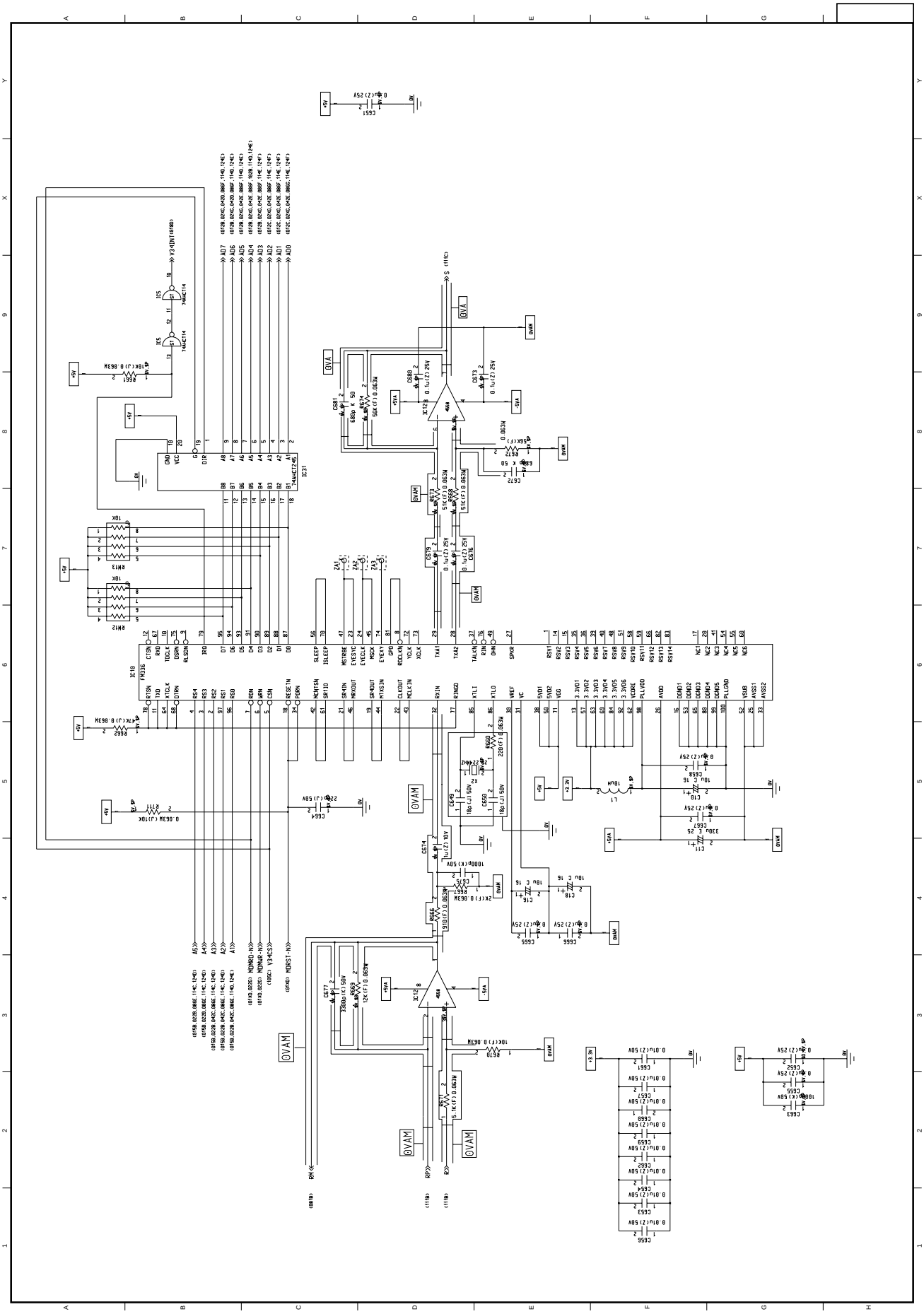

M60-PCB Circuit Diagram (9/13)
(41178301SS)

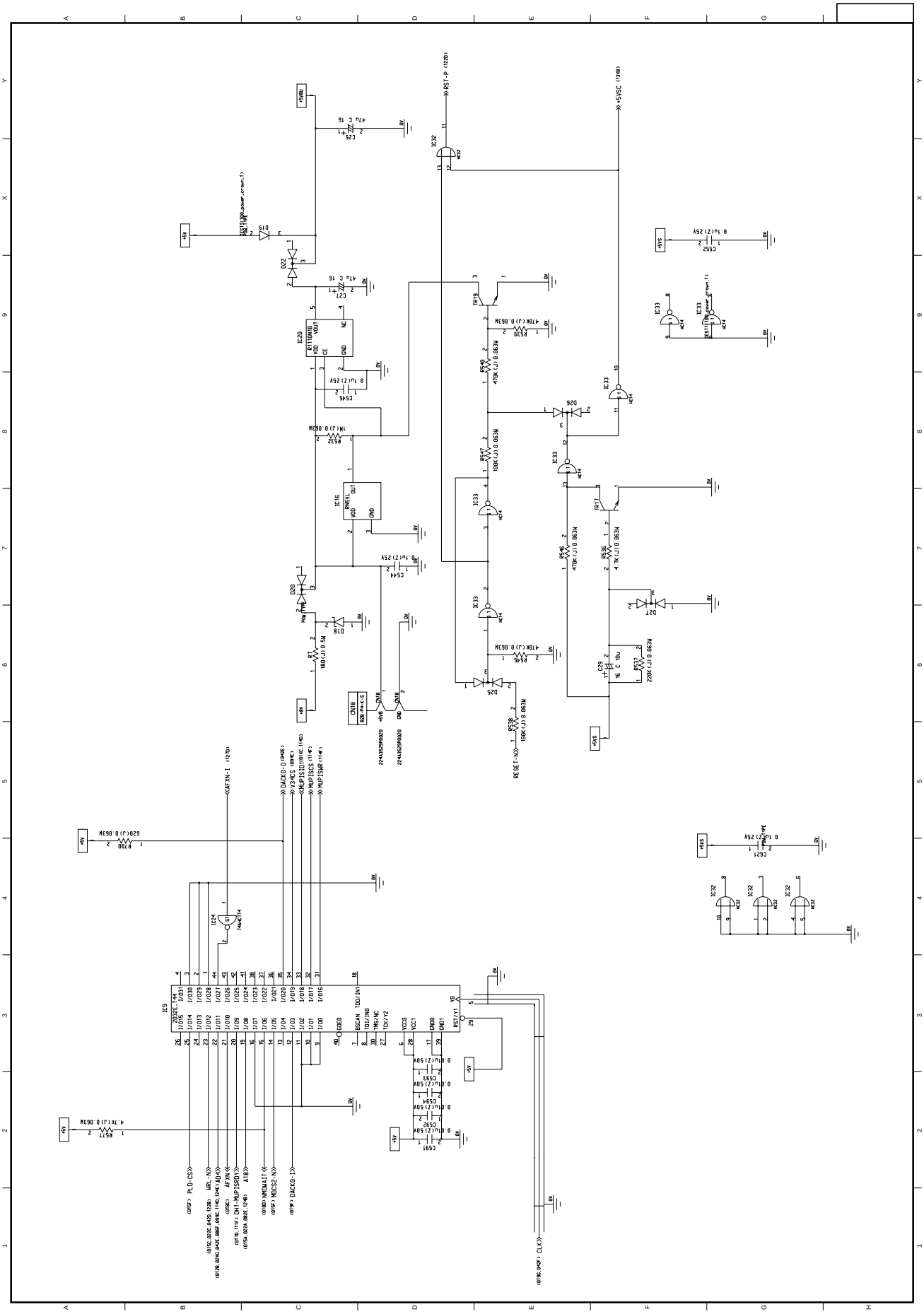

M60-PCB Circuit Diagram (10/13)
(41178301SS)

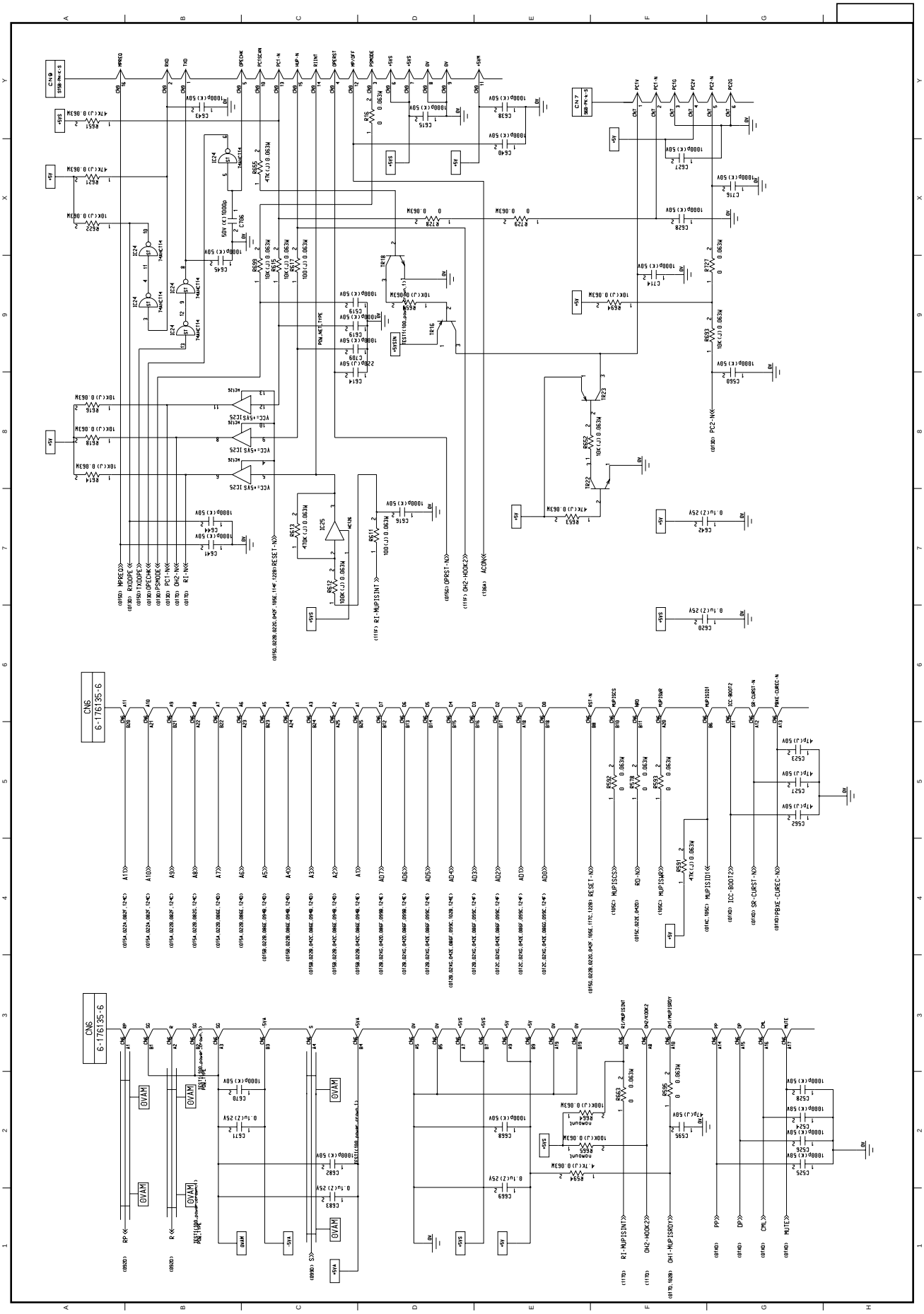

M60-PCB Circuit Diagram (11/13)
(41178301SS)

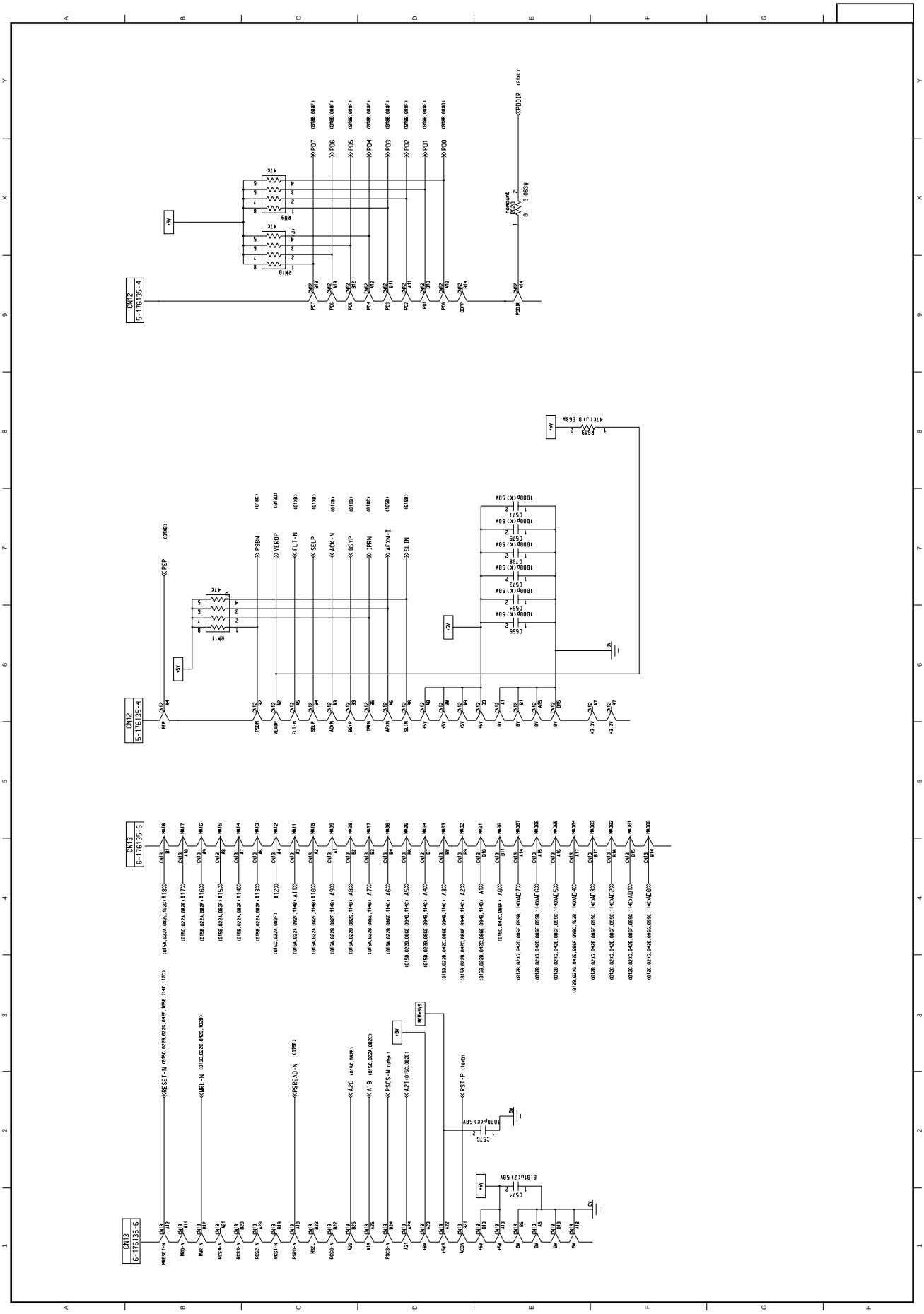

M60-PCB Circuit Diagram (12/13)
(41178301SS)

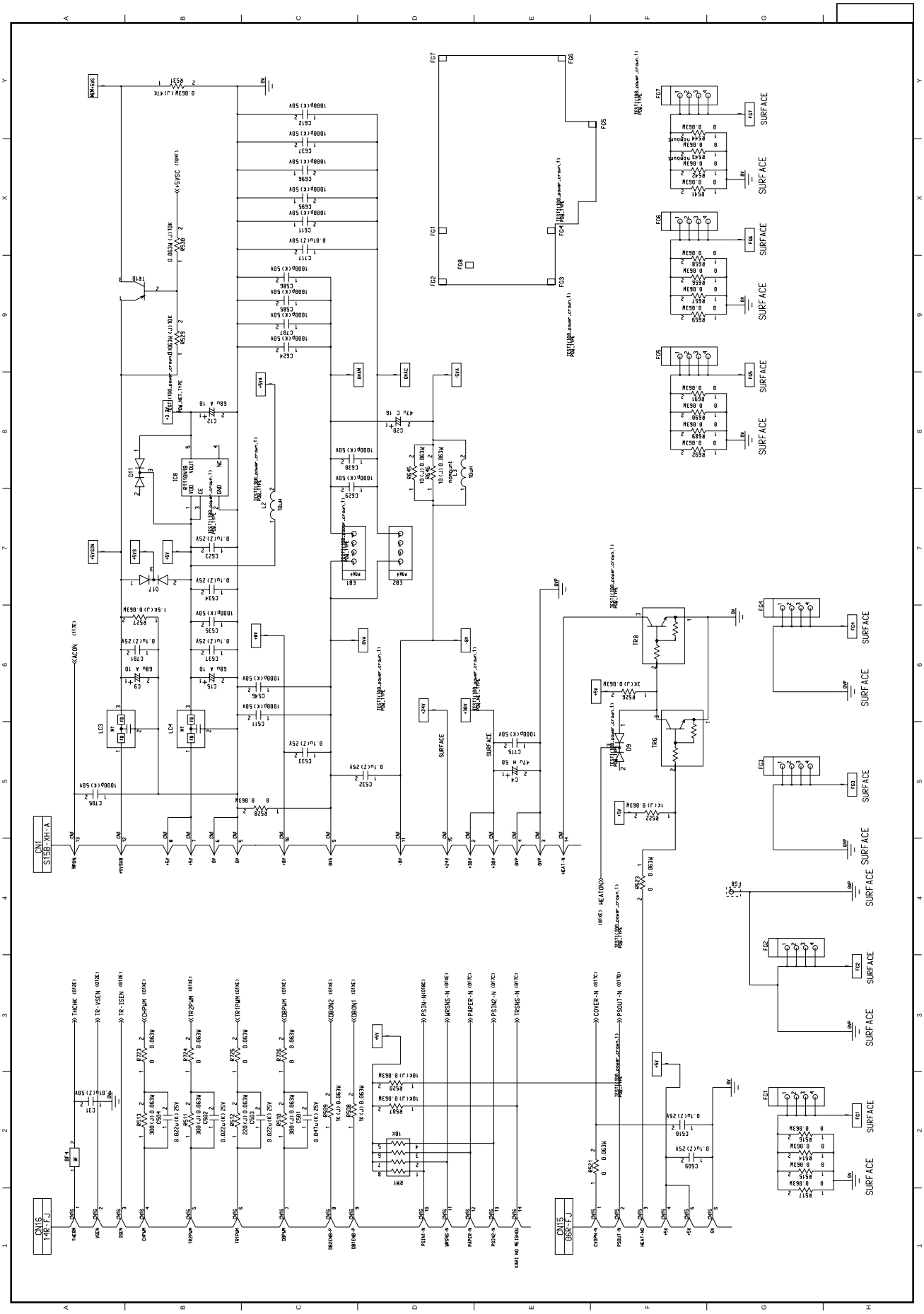

M60-PCB Circuit Diagram (13/13)
(41178301SS)

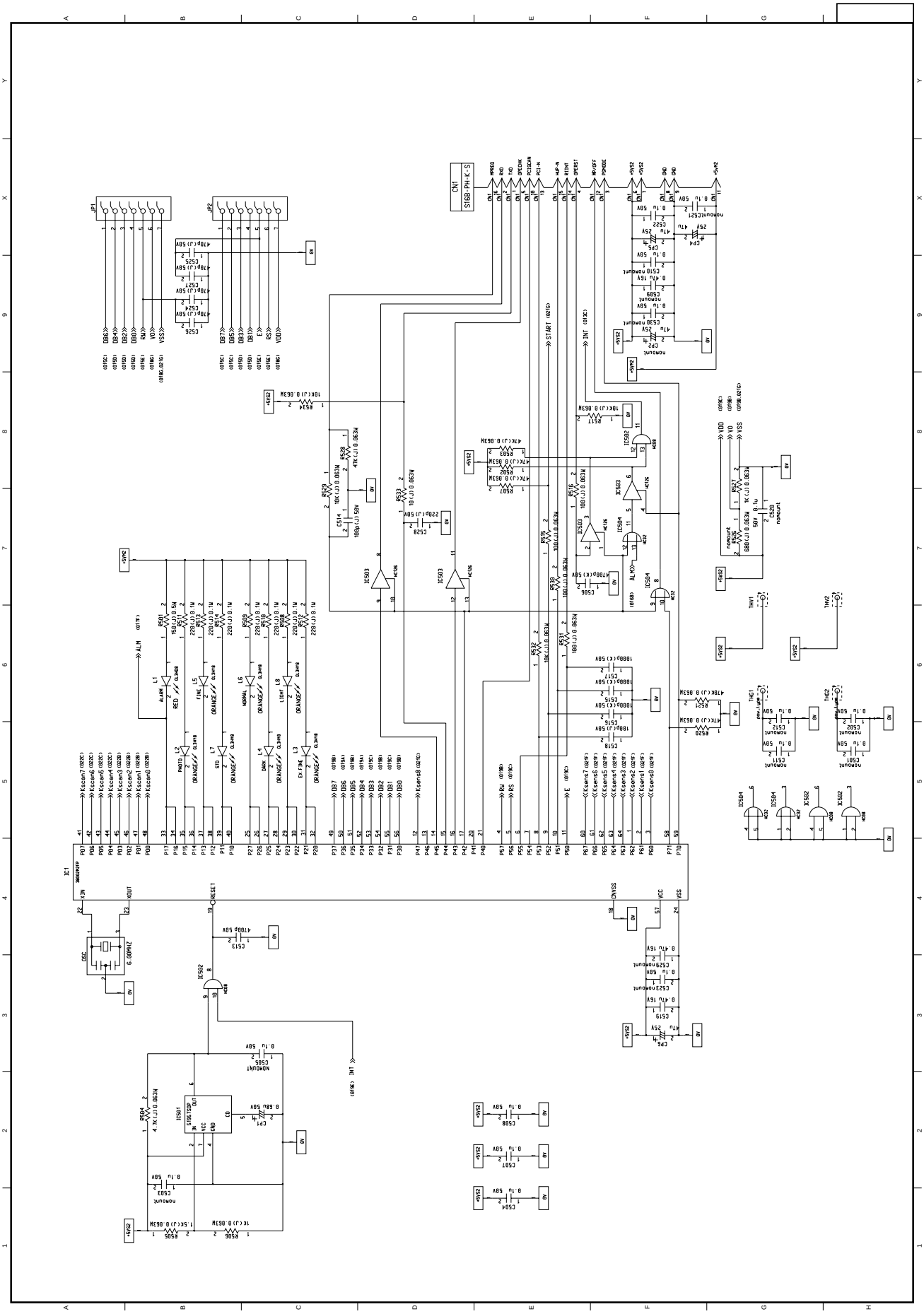

P60-PCB Circuit Diagram (1/2)
(41178601SS)

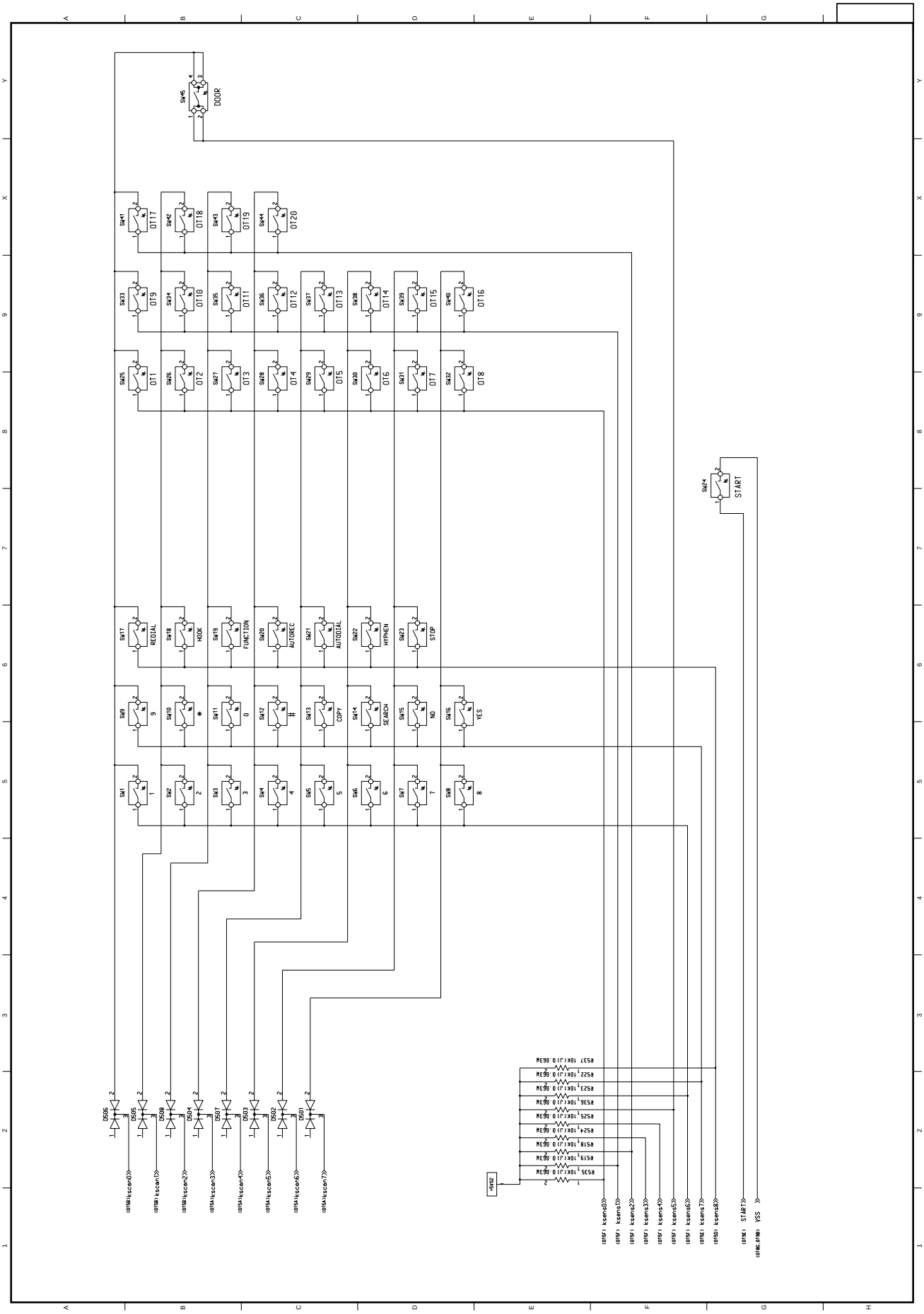

P60-PCB Circuit Diagram (2/2)
(41178601SS)

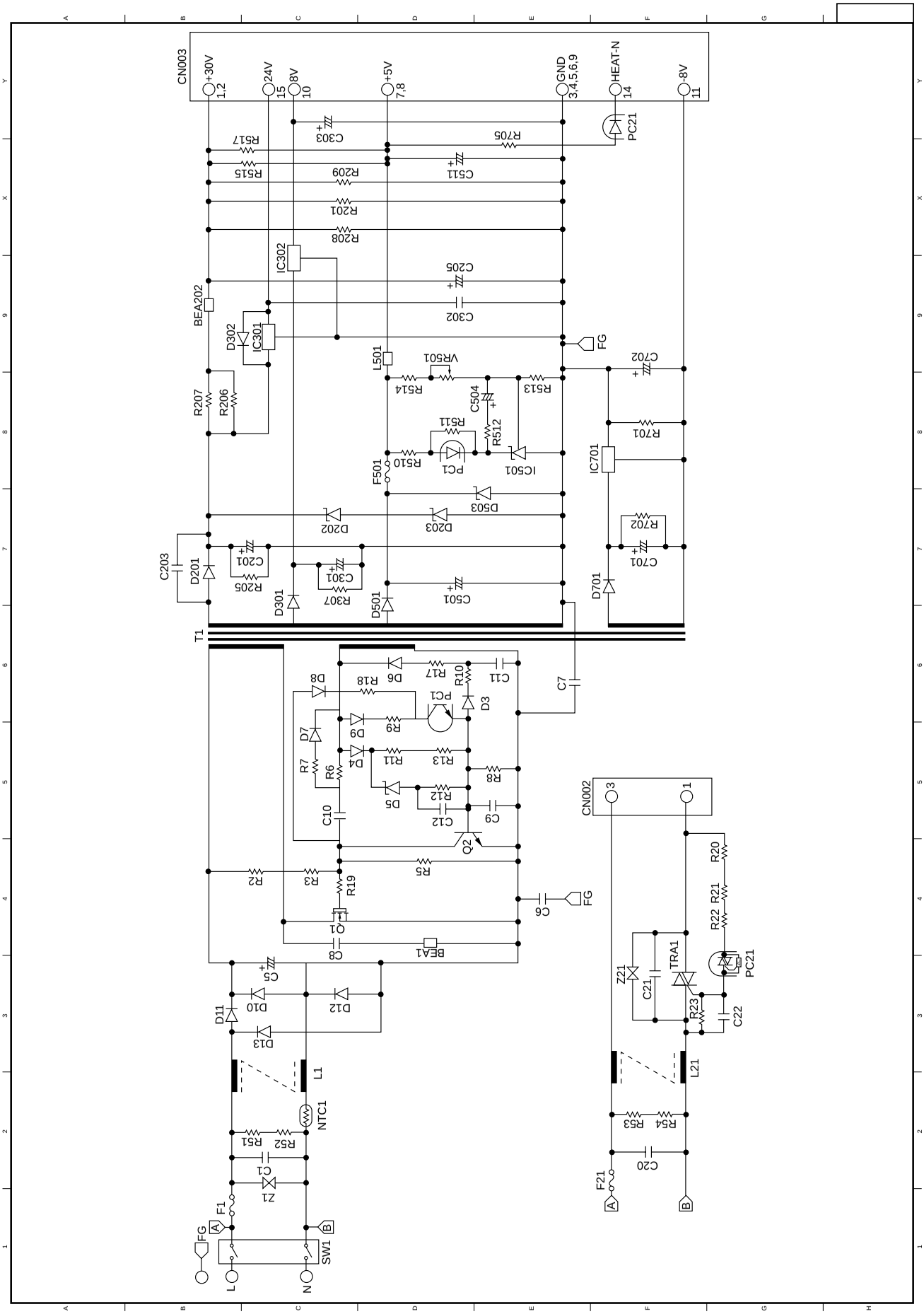

MPW1561 POW (120VAC) Circuit Diagram (1/1)
(S1PS1433)

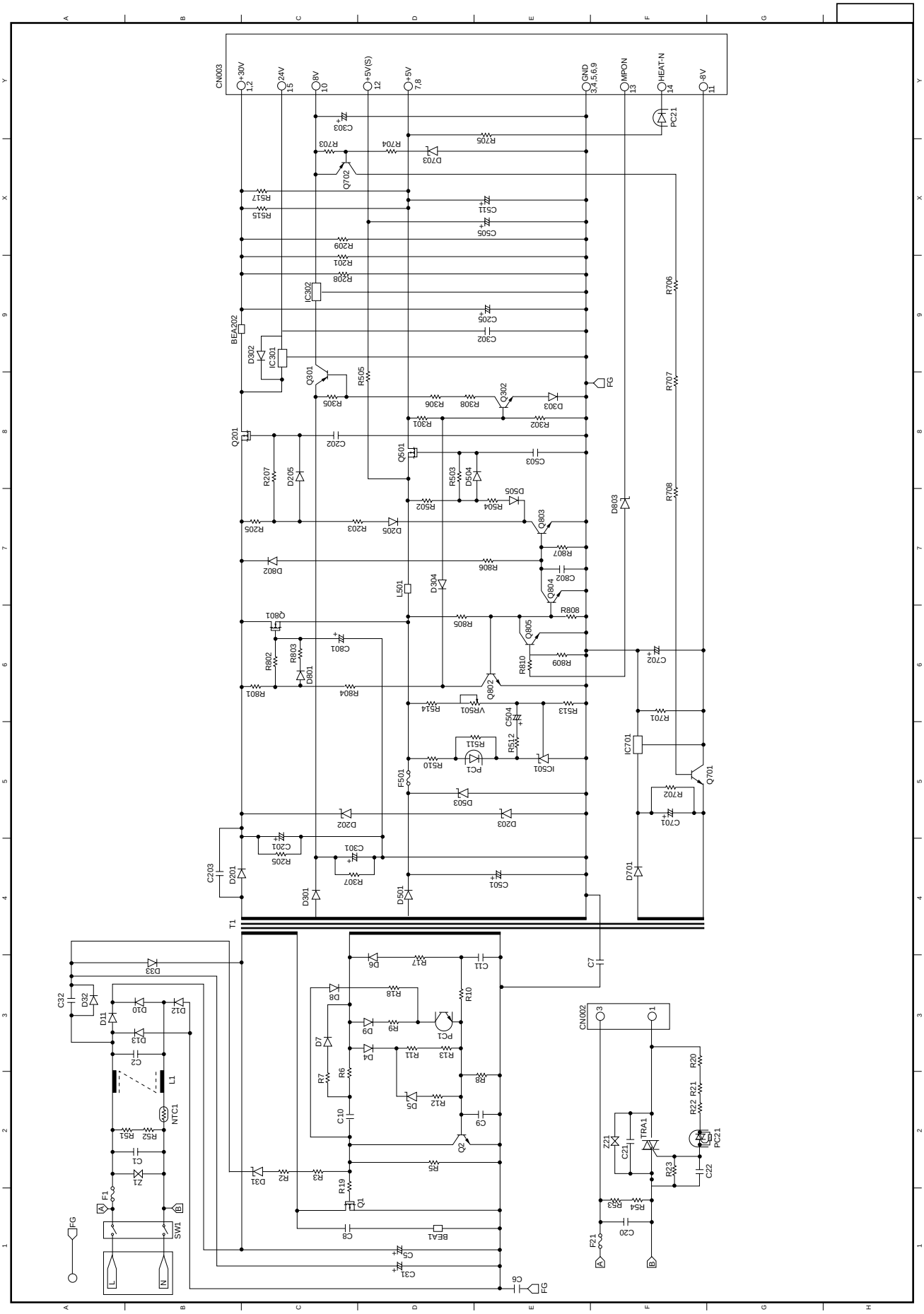

MPW1461 POW (230VAC) Circuit Diagram (1/1)
(S1PS1432)

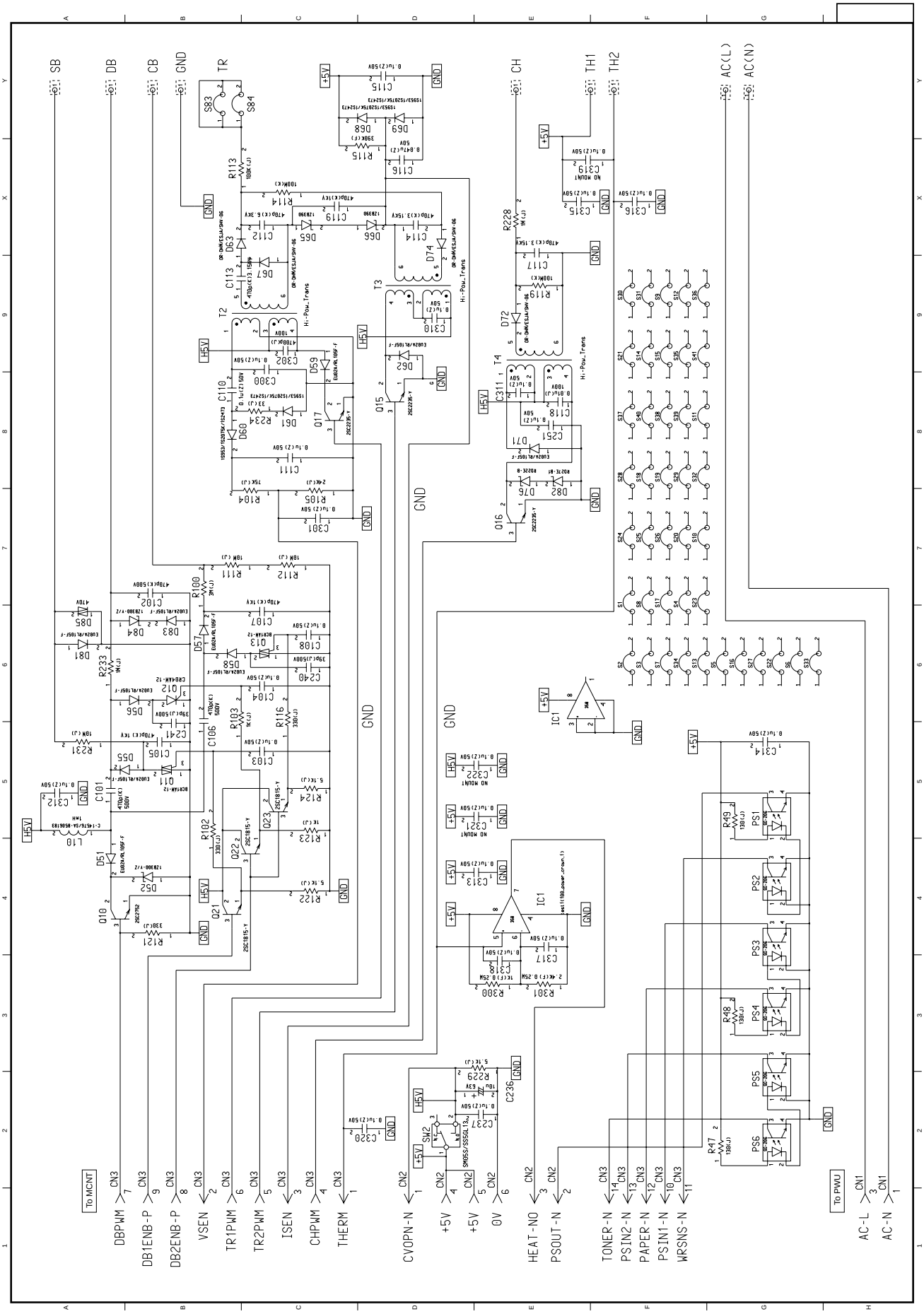

H08-PCB Circuit Diagram (1/1)
(41144801SS)

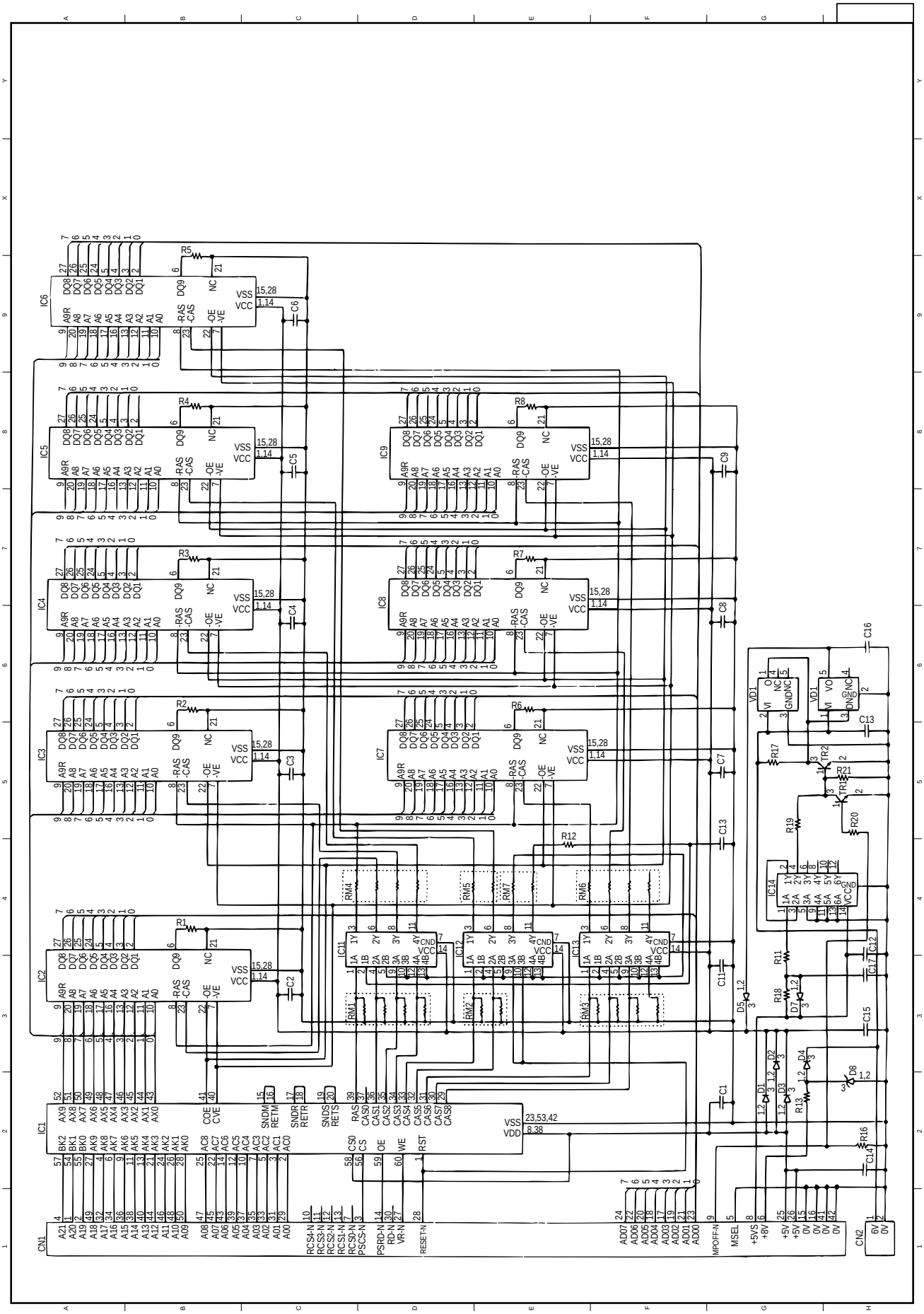

MEM-PCB Circuit Diagram (1/1)
(QAS-12175)

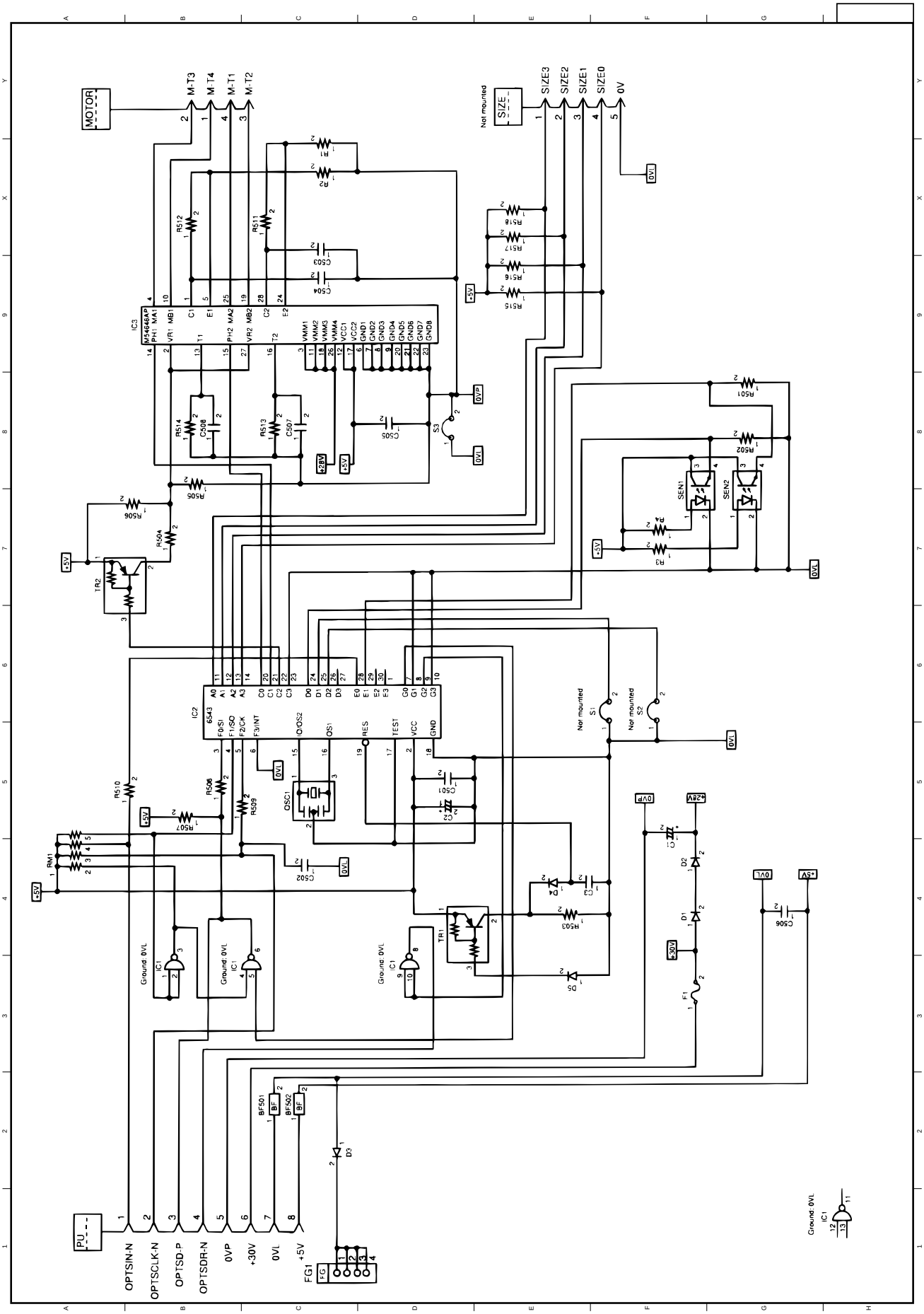

TQSB-PCB Circuit Diagram (1/1)
(3SS5005-3362Z001)

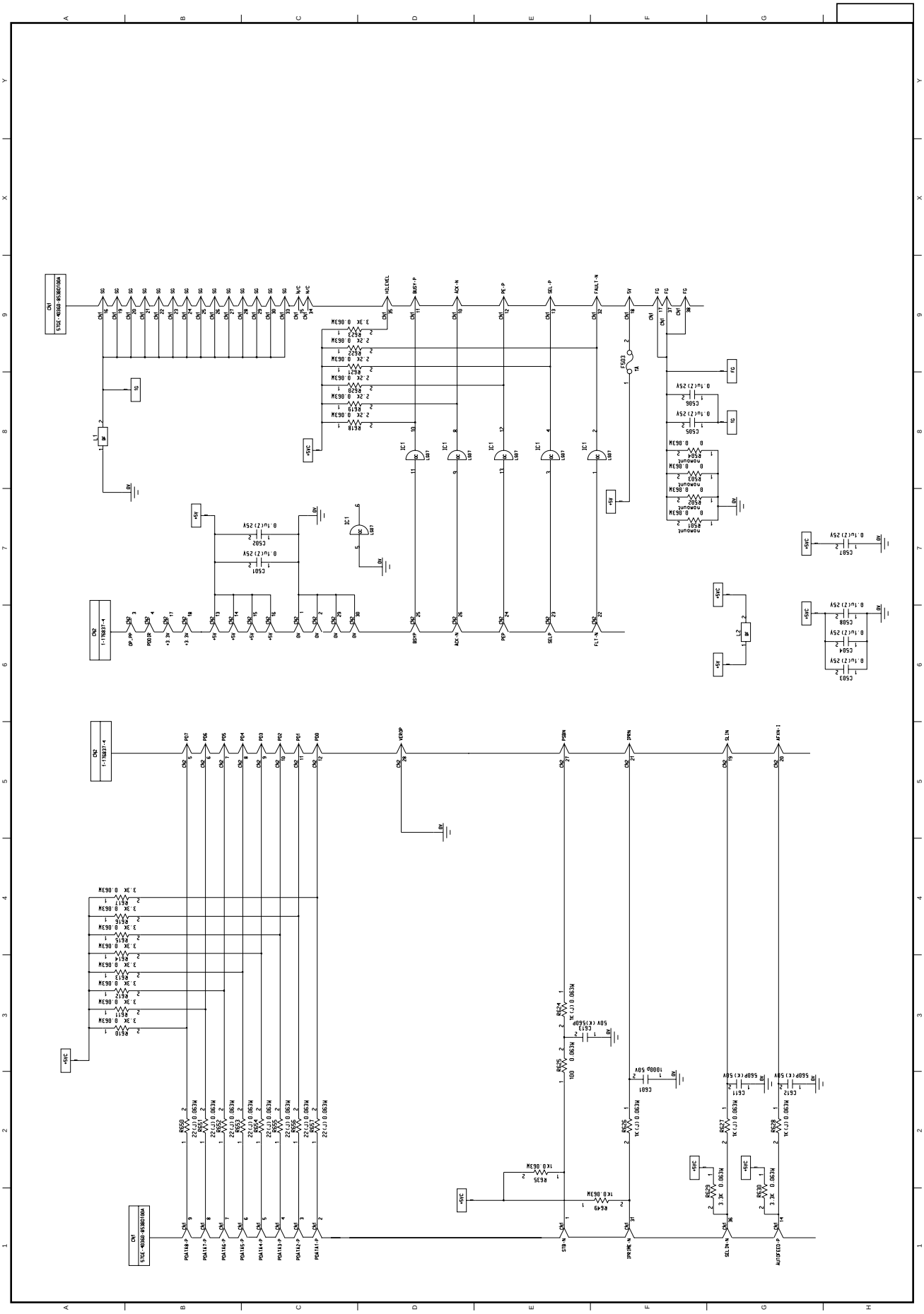

CTT-PCB Circuit Diagram (1/1)
(41360801SS)

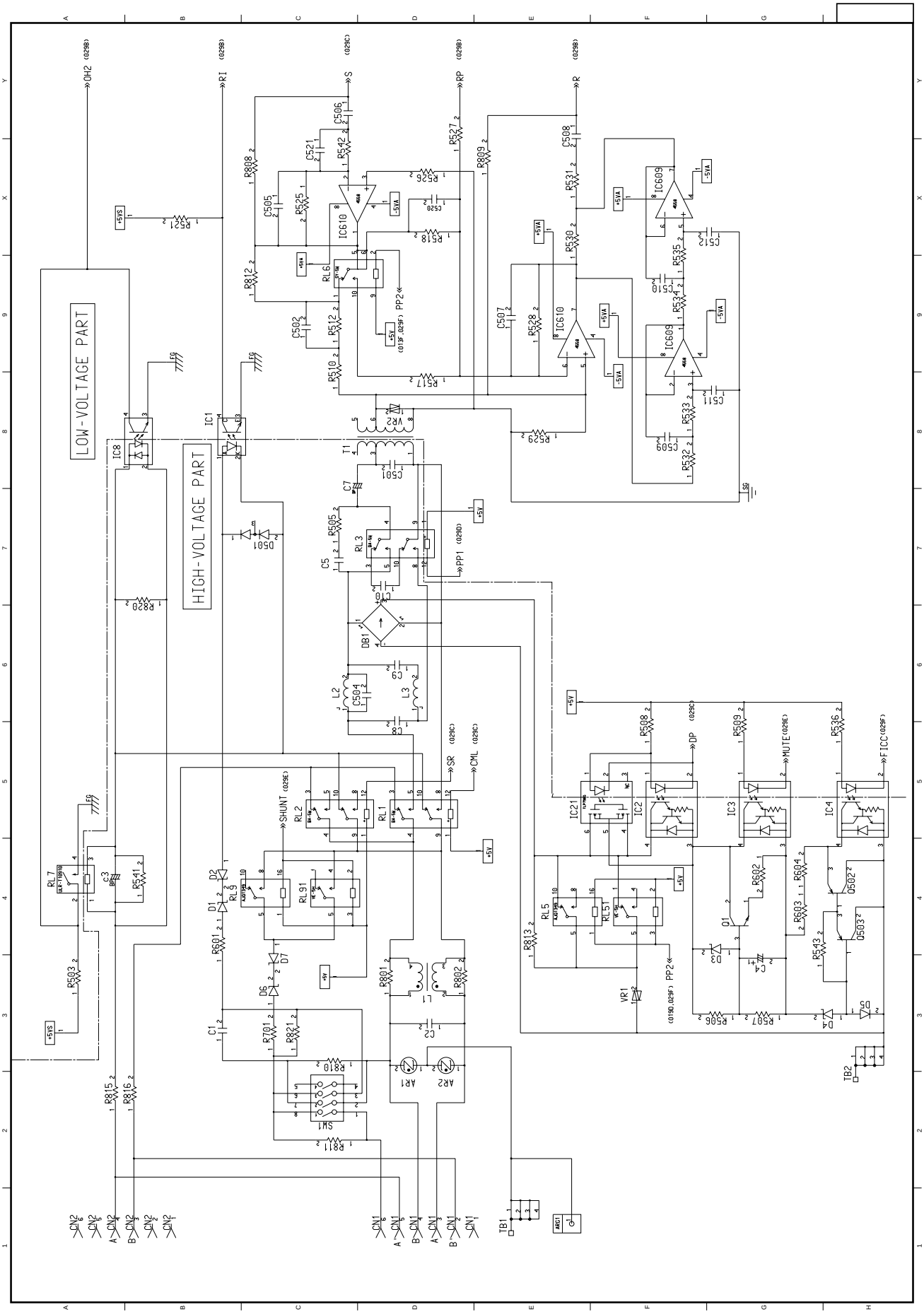

EN9-PCB Circuit Diagram (1/2)
(41144301SS)

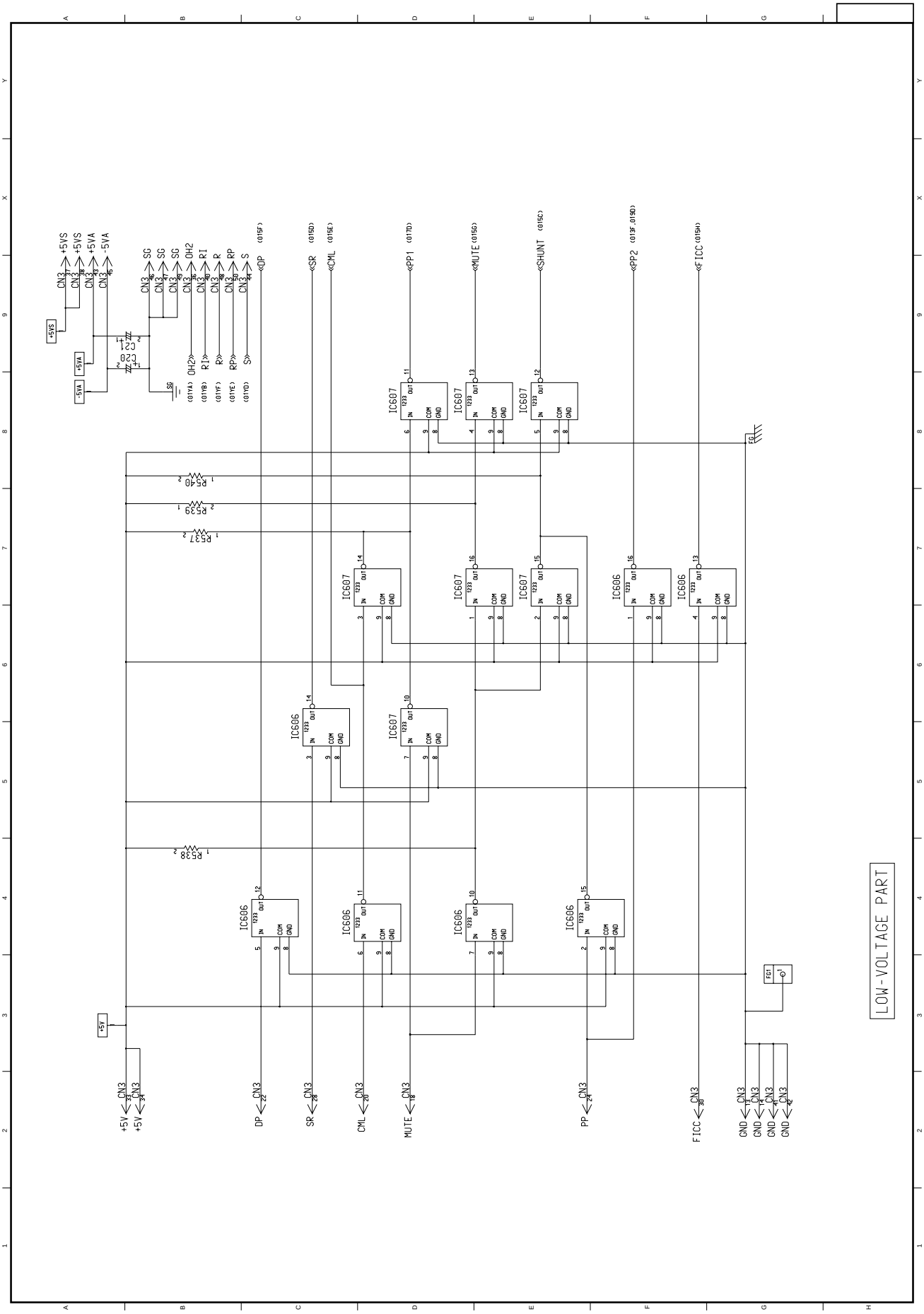

EN9-PCB Circuit Diagram (2/2)
(41144301SS)

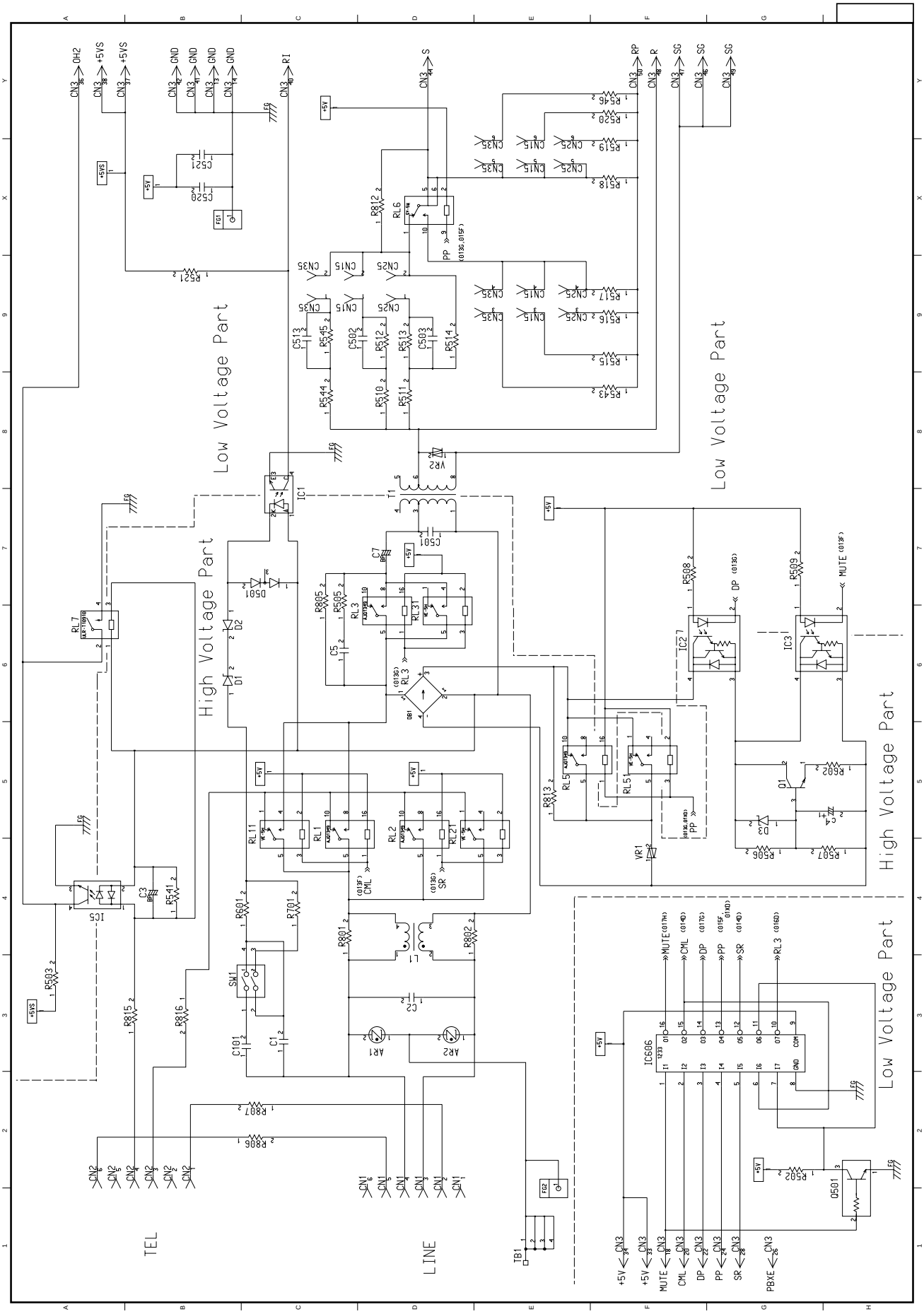

INU-PCB Circuit Diagram (1/1)
(41144501SS)

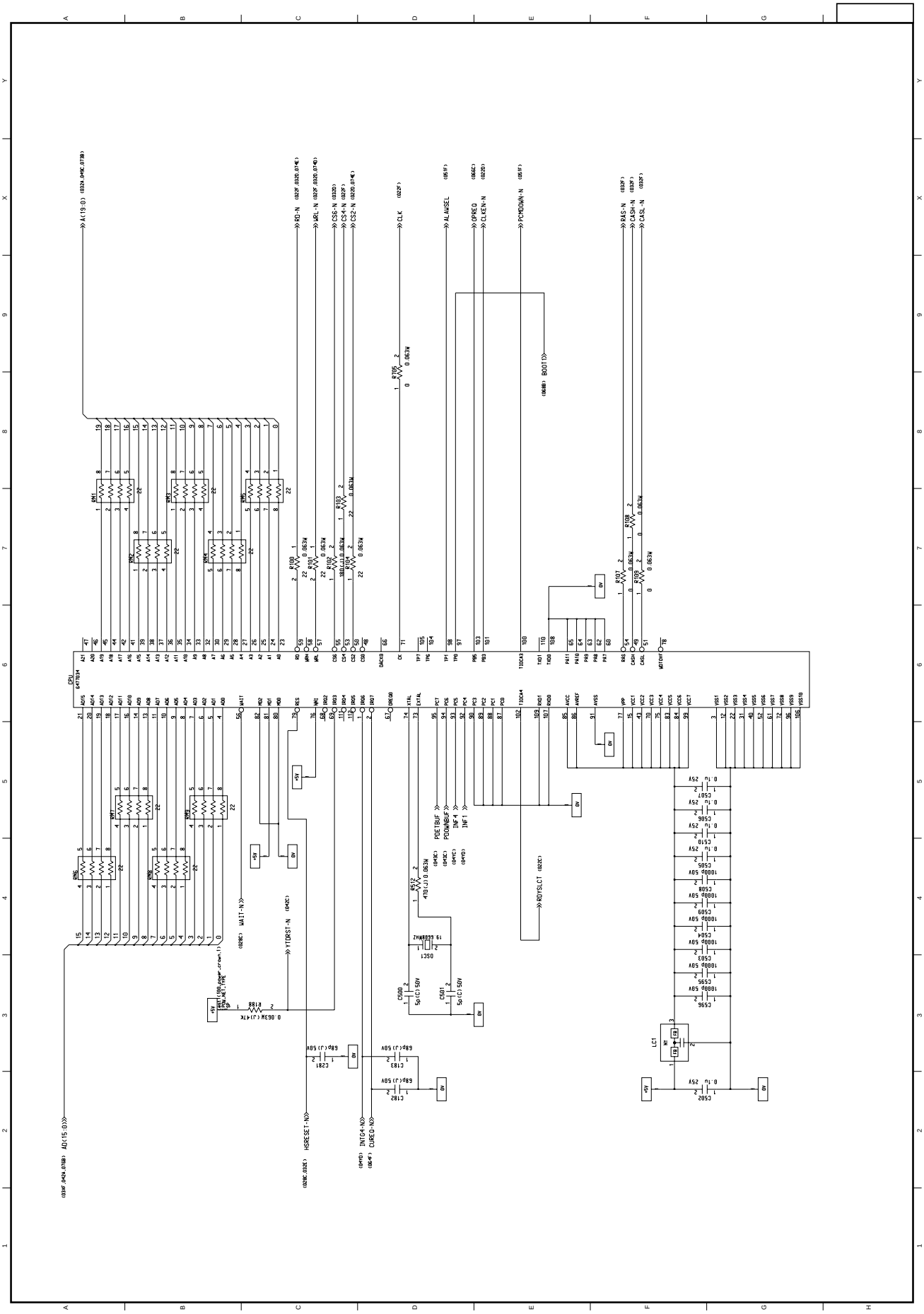

G4N-PCB Circuit Diagram (1/7)
(41033701SS)

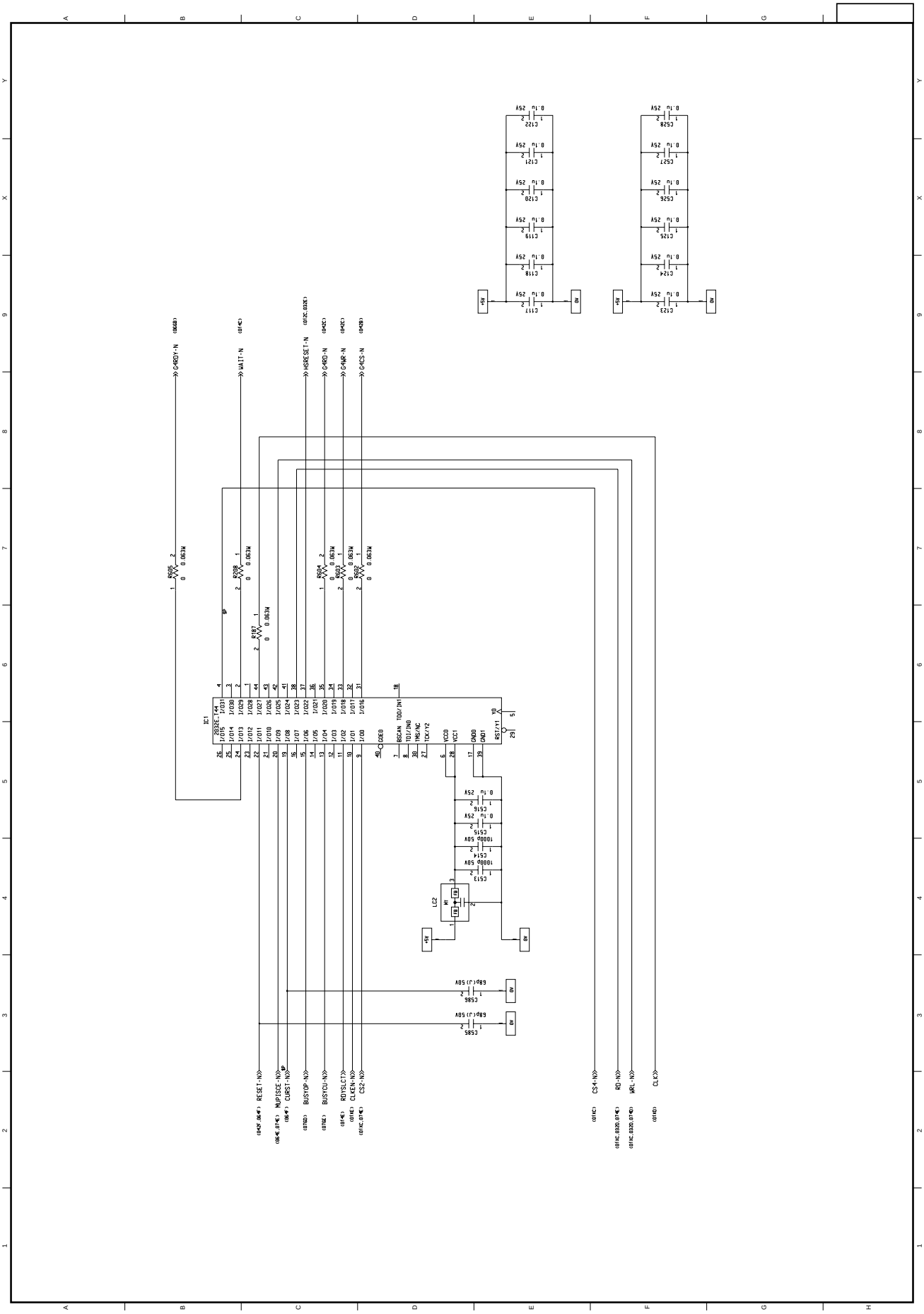

G4N-PCB Circuit Diagram (2/7)
(41033701SS)

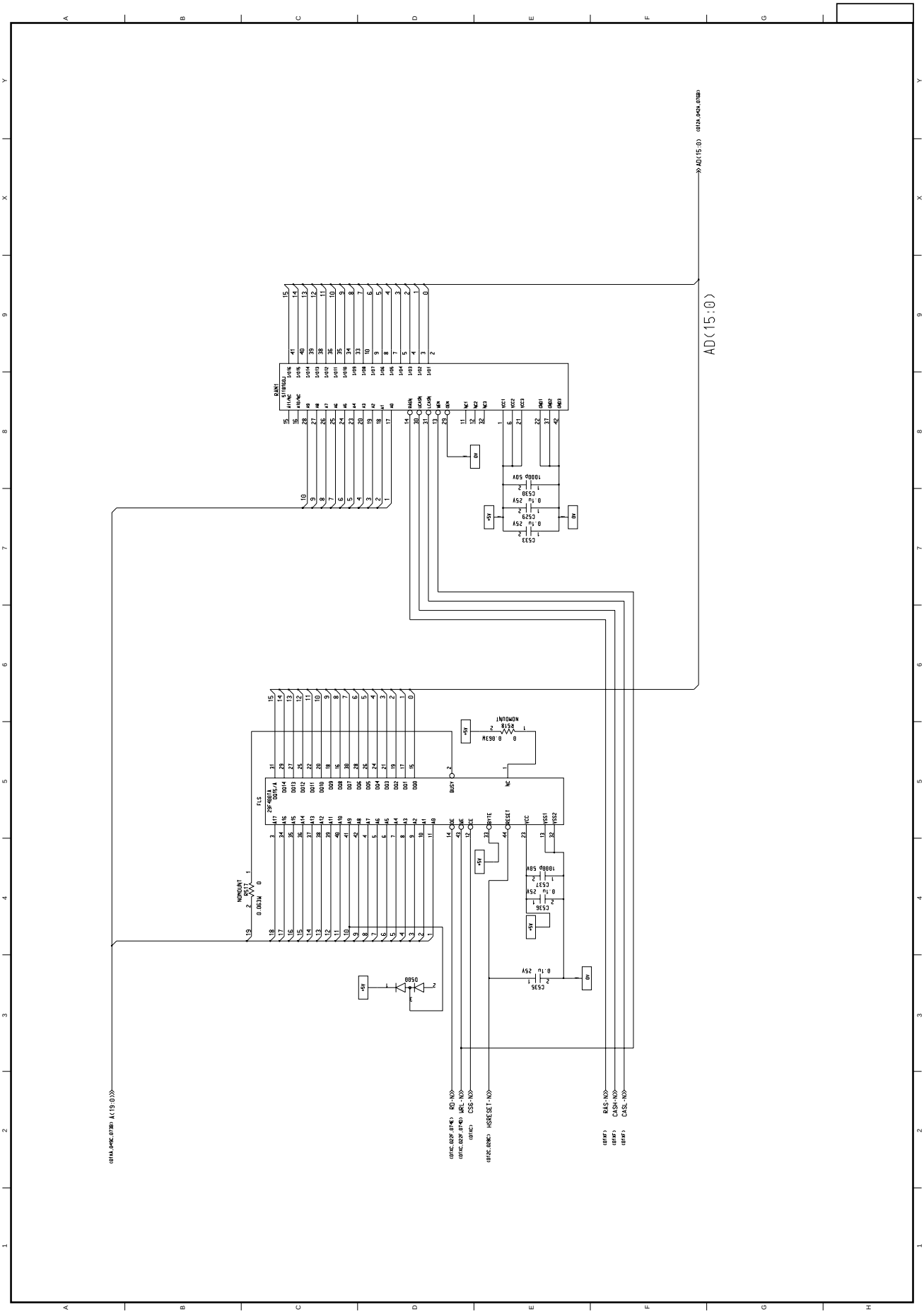

G4N-PCB Circuit Diagram (3/7)
(41033701SS)

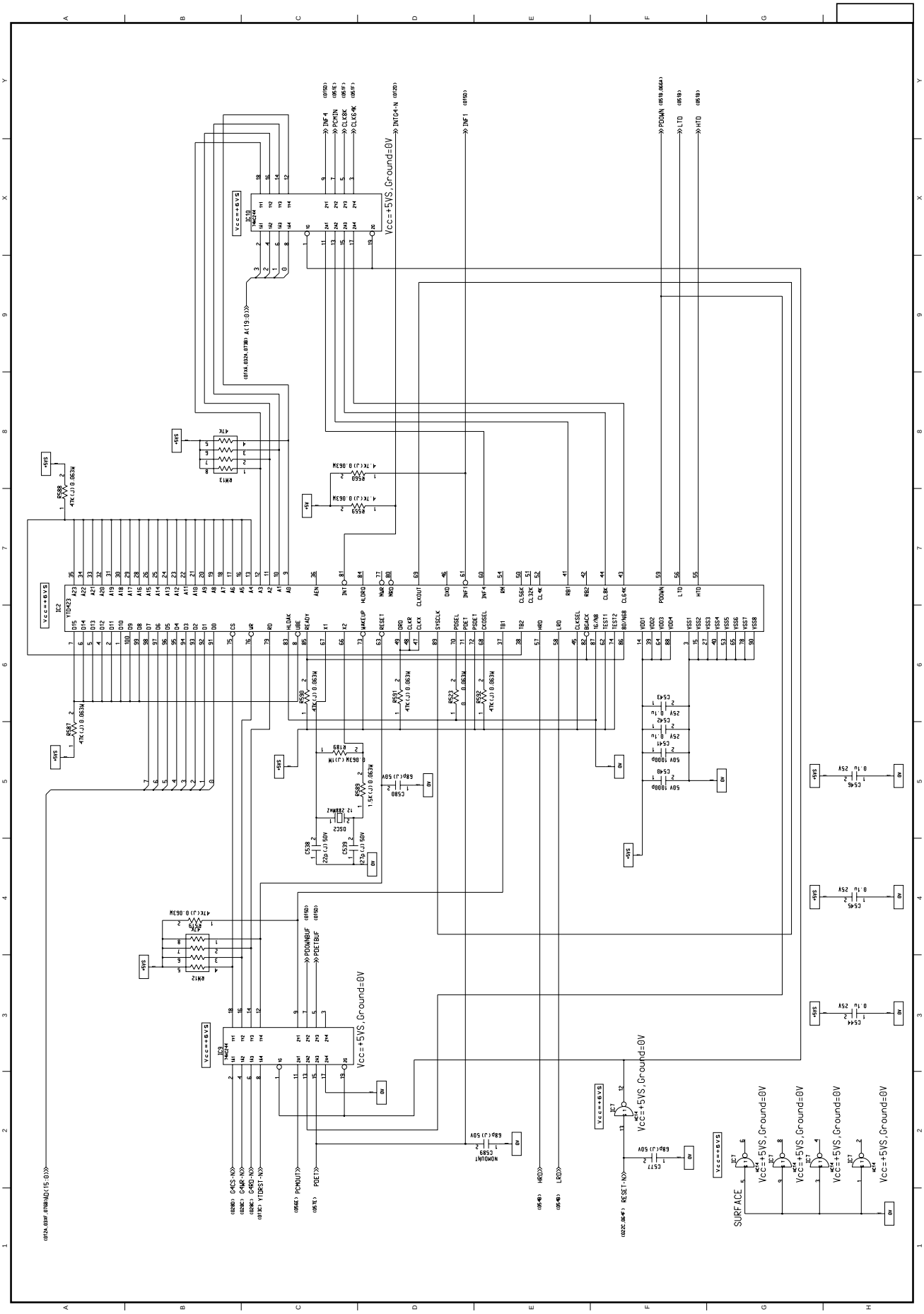

G4N-PCB Circuit Diagram (4/7)
(41033701SS)

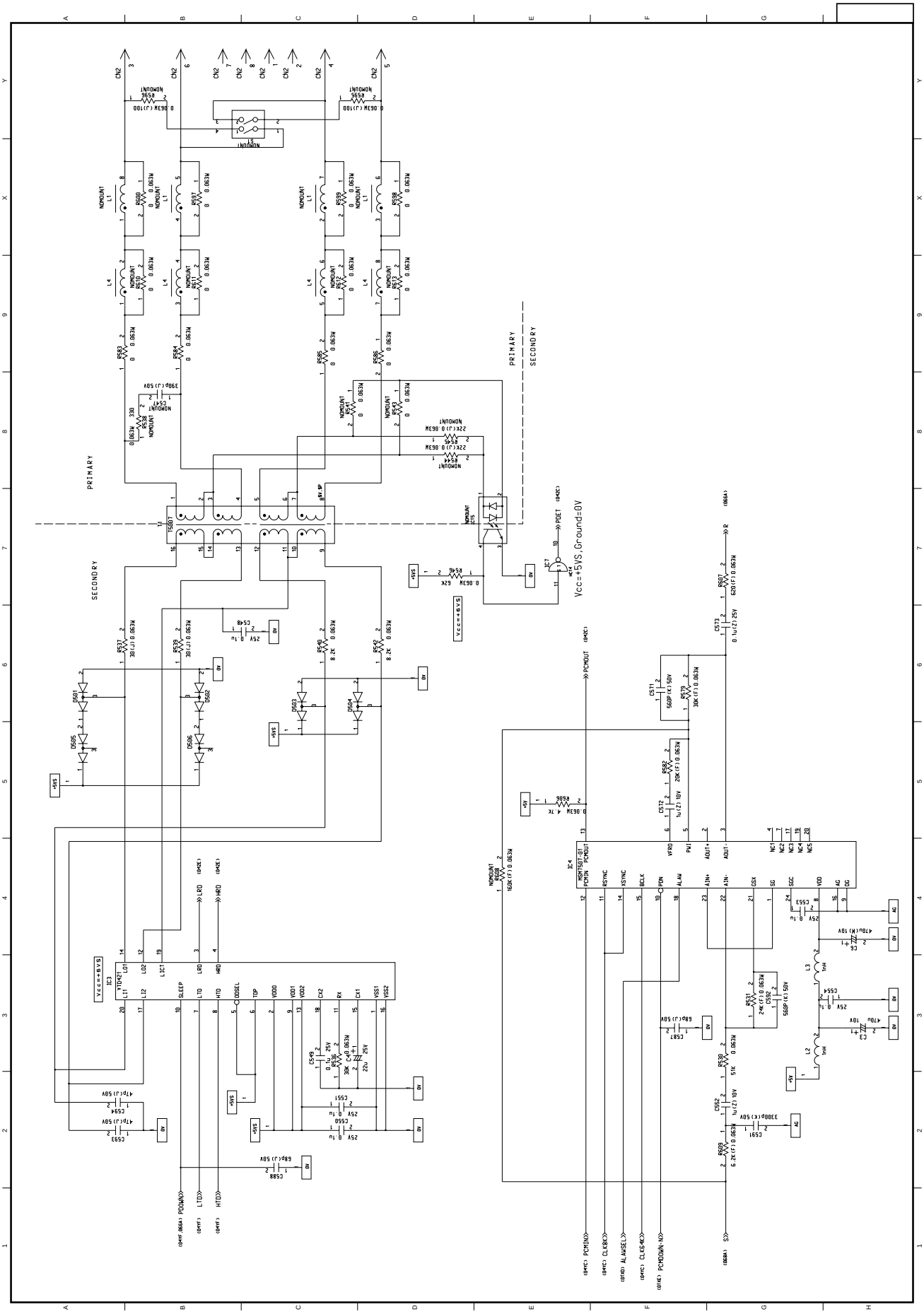

G4N-PCB Circuit Diagram (5/7)
(41033701SS)

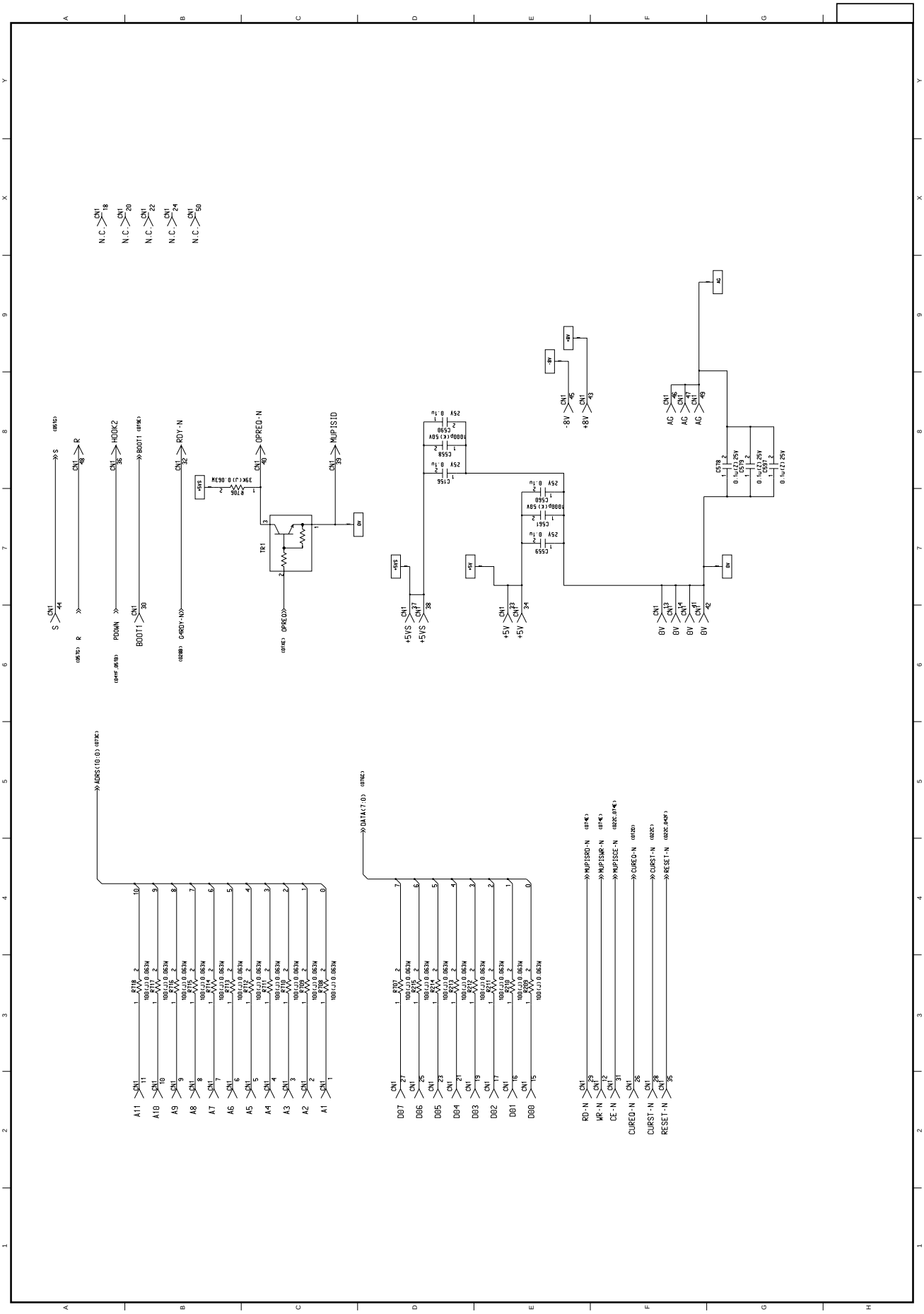

G4N-PCB Circuit Diagram (6/7)
(41033701SS)

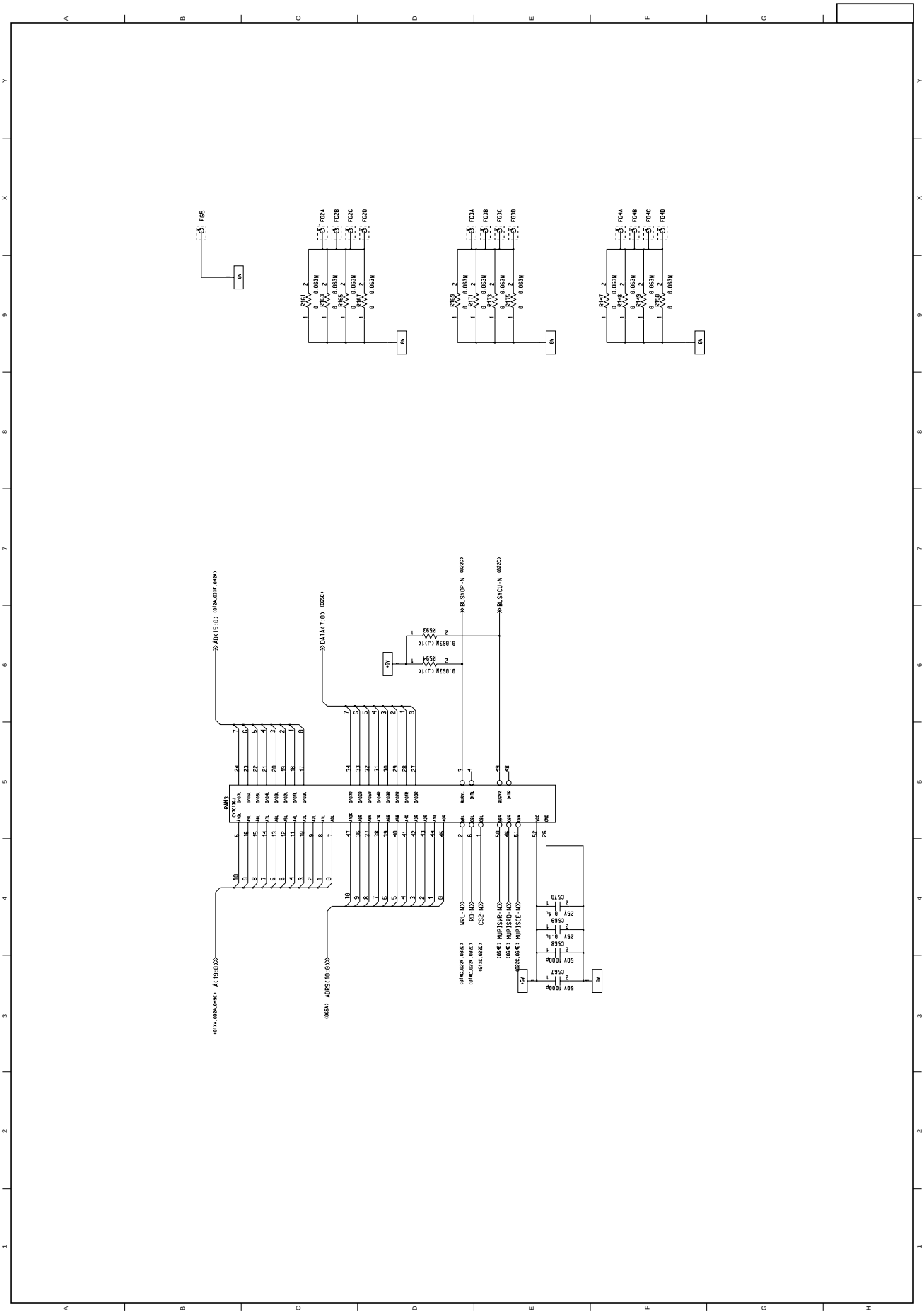

G4N-PCB Circuit Diagram (7/7)
(41033701SS)

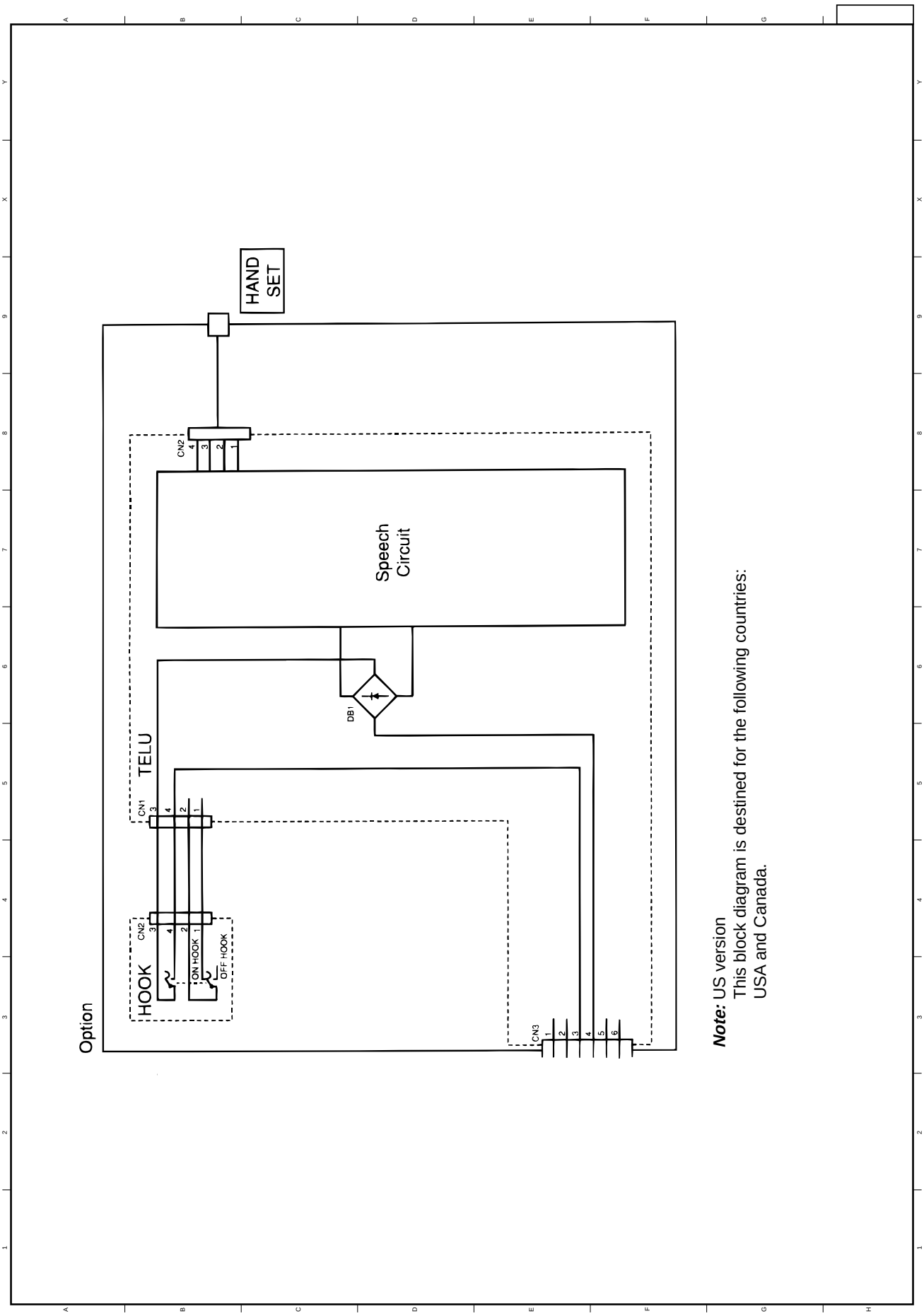

TEL-U-PCB Block Diagram (1/1)

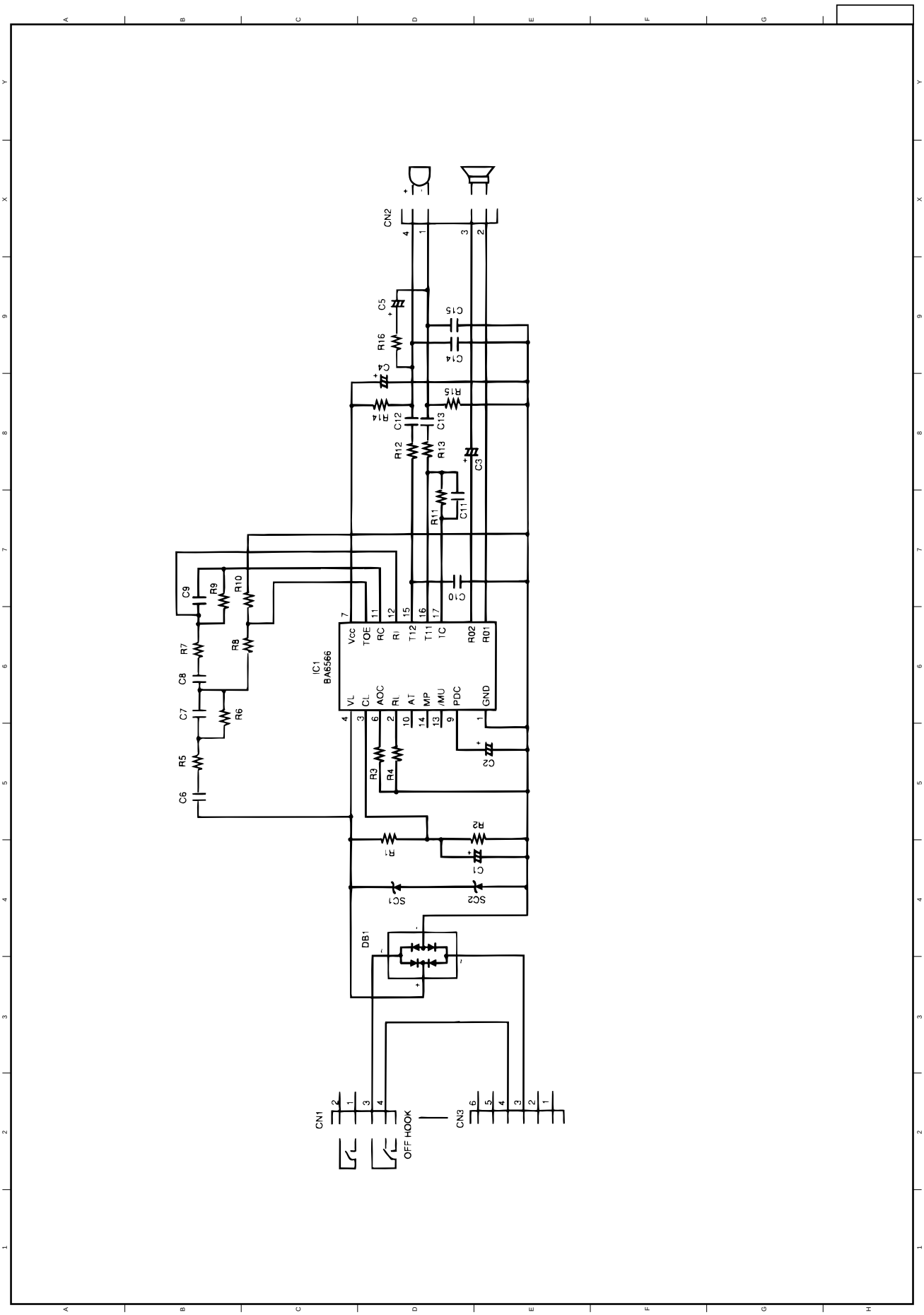

TEL-U-PCB Circuit Diagram (1/1)
(3SS5003-6262)

TEL-W1-PCB Block Diagram (1/1)

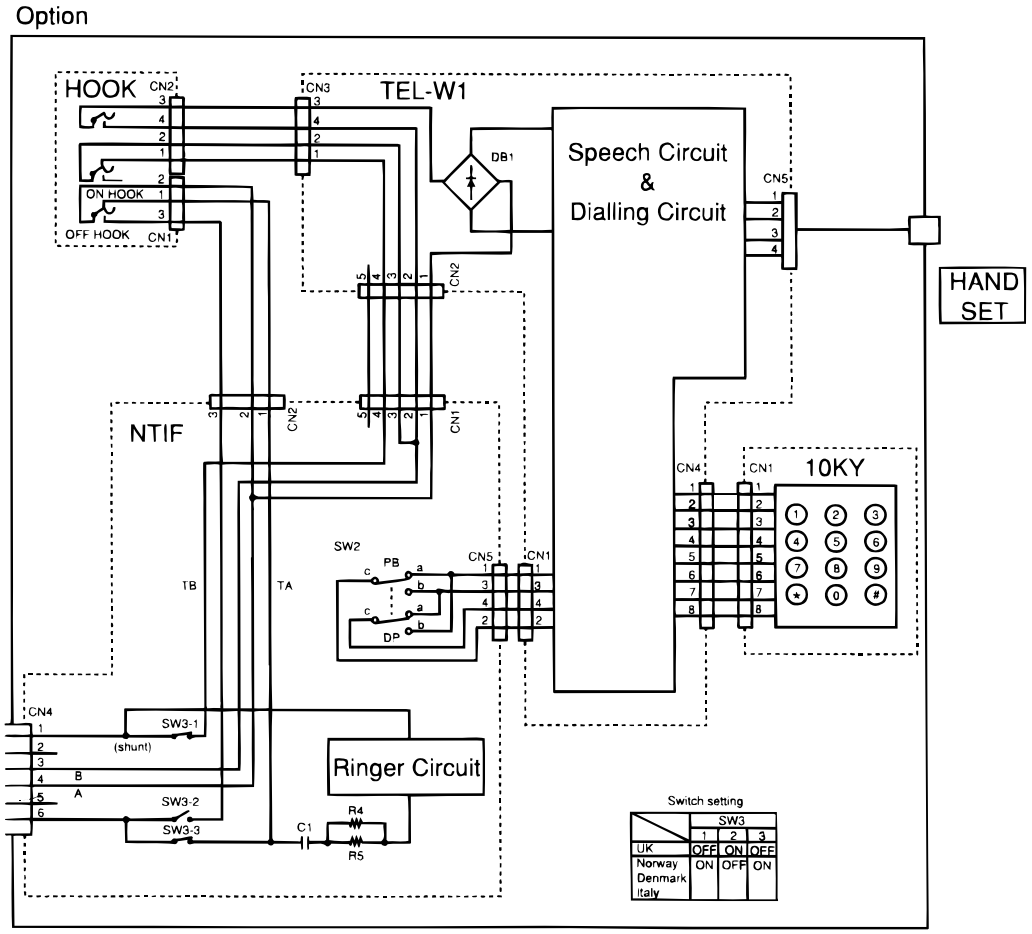

Note: INT'L version (ABX types)
This block diagram is destined for the following countries:
U.K., Norway, Denmark and Itary.

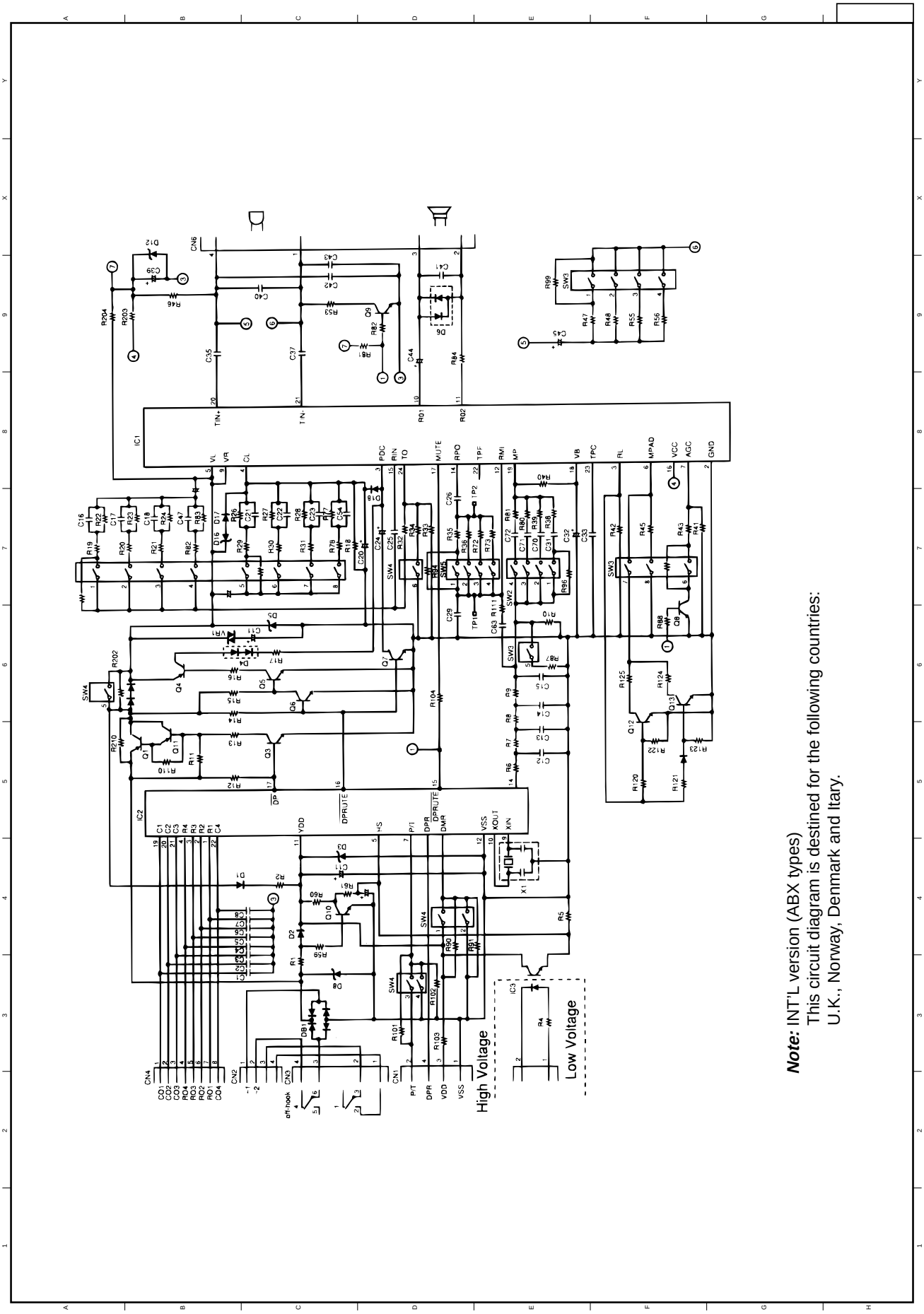

Note: INT'L version (ABX types)
This circuit diagram is destined for the following countries:
U.K., Norway, Denmark and Itary.

TEL-W1-PCB Circuit Diagram (1/1)
(3SS3528-1006)

TEL-W2-PCB Block Diagram (1/2)

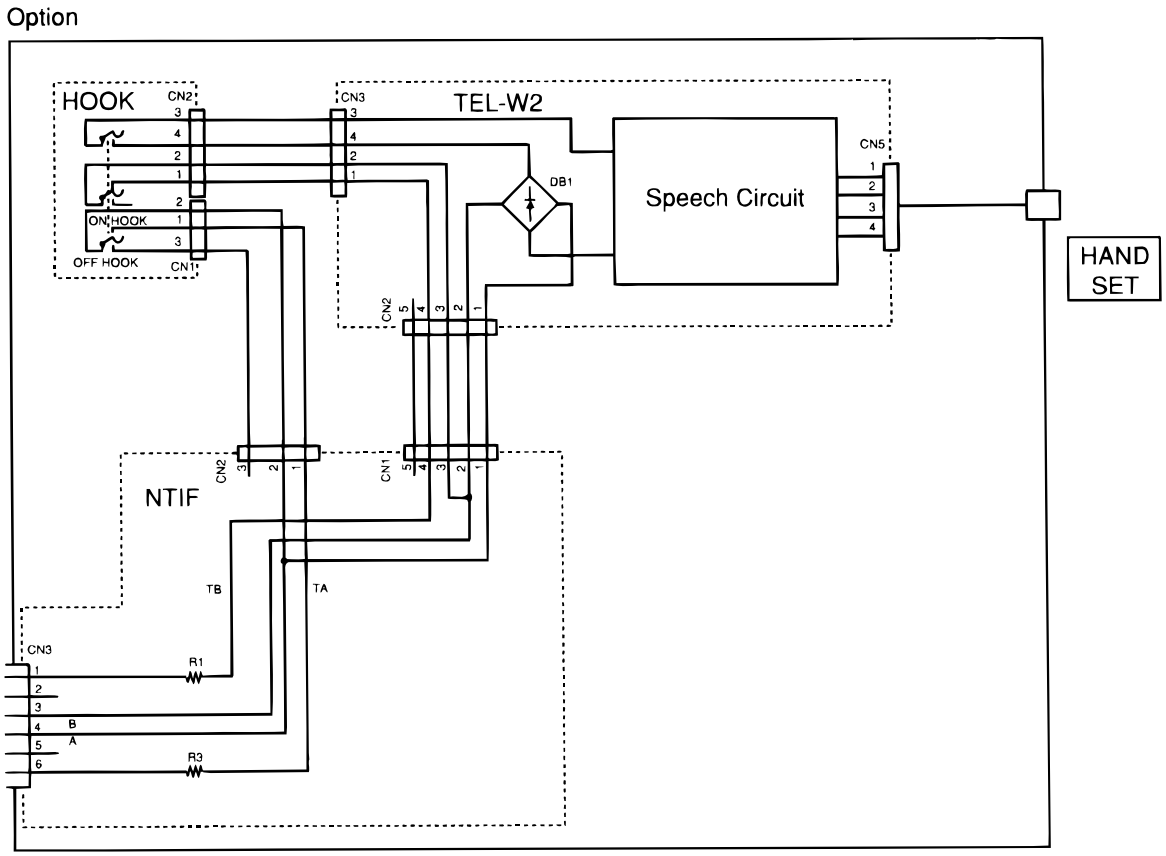

Note: INT'L version (AB types)
This block diagram is destined for the following countries:
Sweden, Finland, The Netherlands, Ireland, Portugal,
New Zealand, Australia, Belguim, Spain and Greece.

TEL-W2-PCB Block Diagram (2/2)

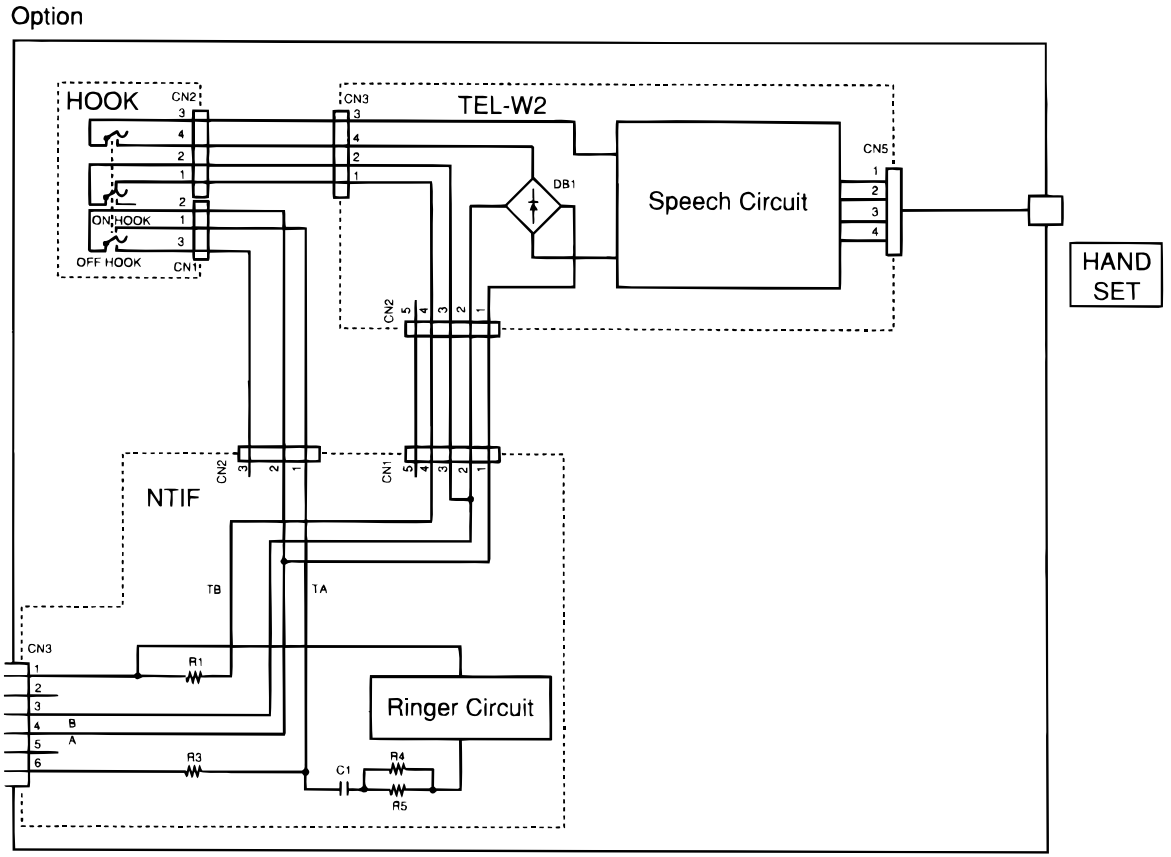

Note: INT'L version (ABB types)
This block diagram is destined for the following countries:
Switzeland and Austria.

TEL-W2-PCB Circuit Diagram (1/1)
(3SS3528-1007)

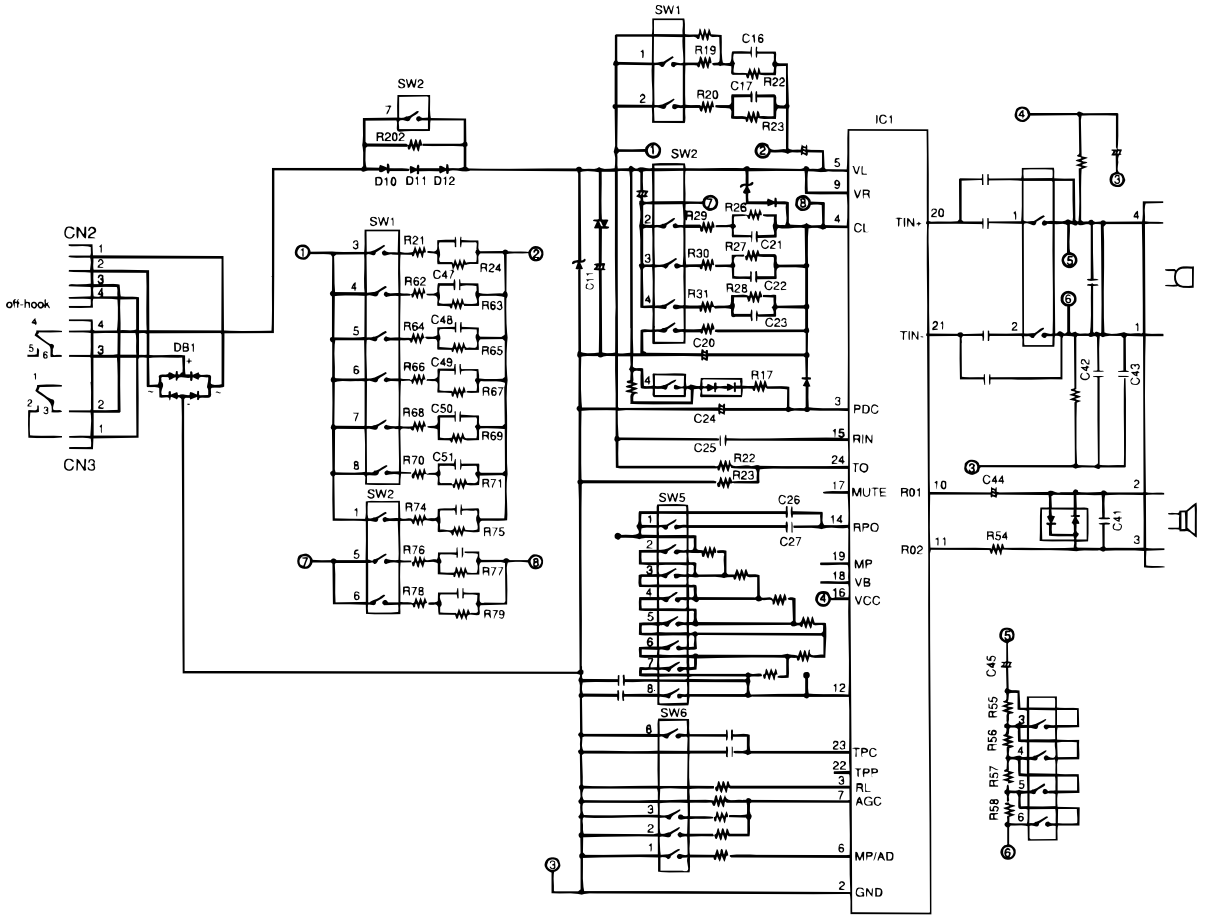

Note: INT'L version (AB types)

This circuit diagram is destined for the following countries:
Sweden, Finland, The Netherlands, Ireland, Portugal,
New Zealand, Australia, Belguim, Spain, Greece,
Switzeland and Austria.

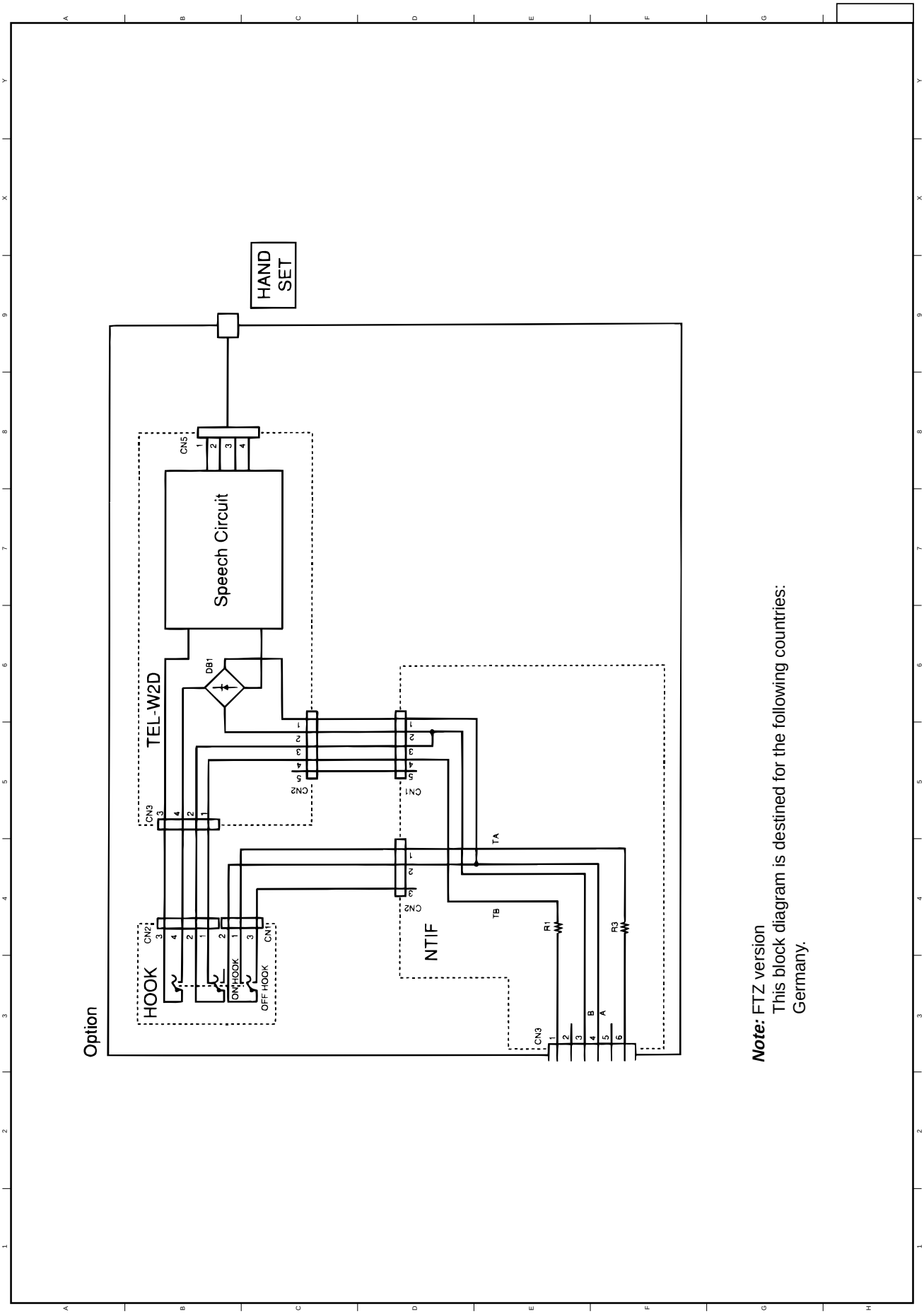

Note: FTZ version
This block diagram is destined for the following countries:
Germany.

TEL-W2D-PCB Block Diagram (1/1)

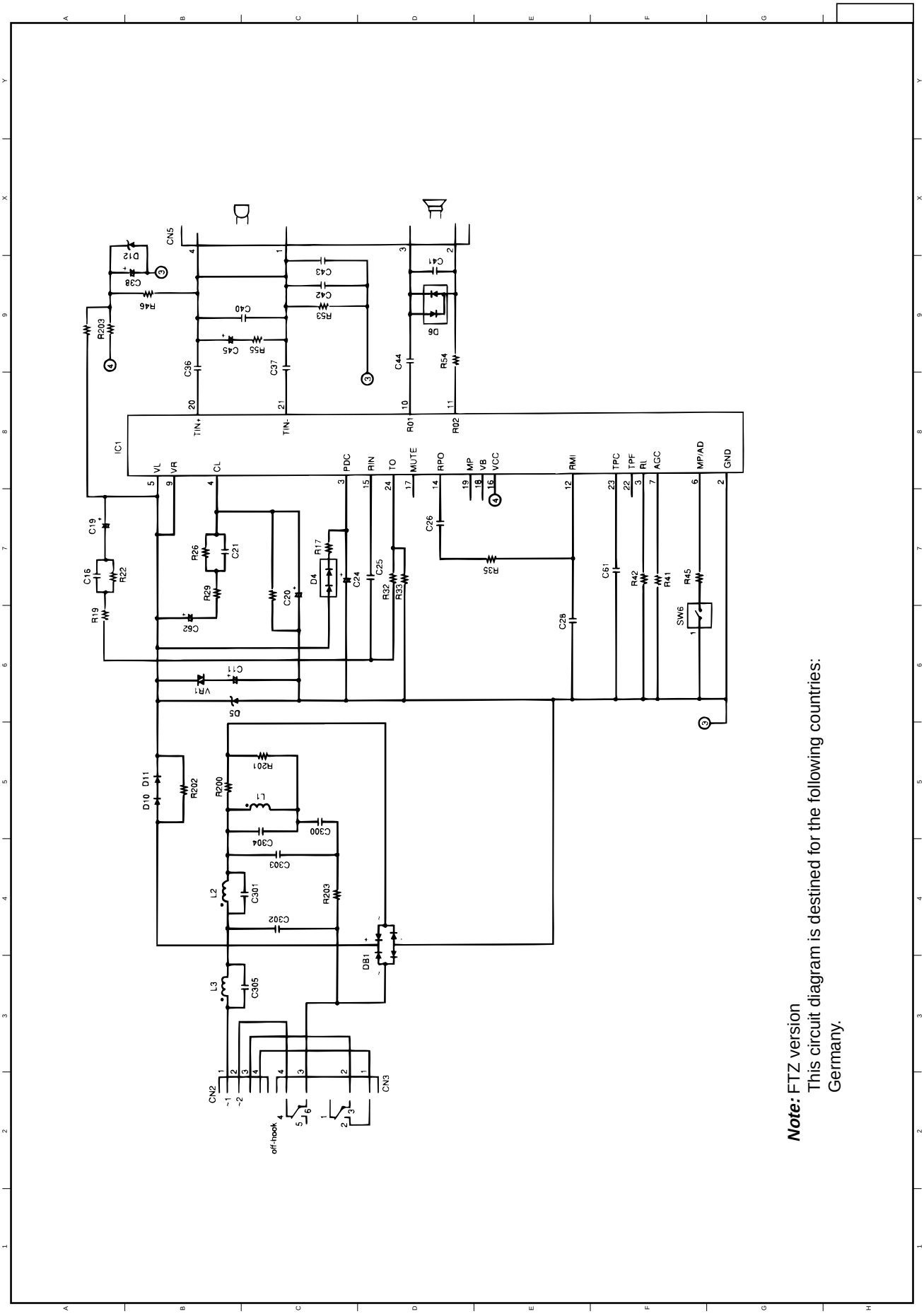

Note: FTZ version
This circuit diagram is destined for the following countries:
Germany.

TEL-W2D-PCB Circuit Diagram (1/1)
(3SS3528-1016)

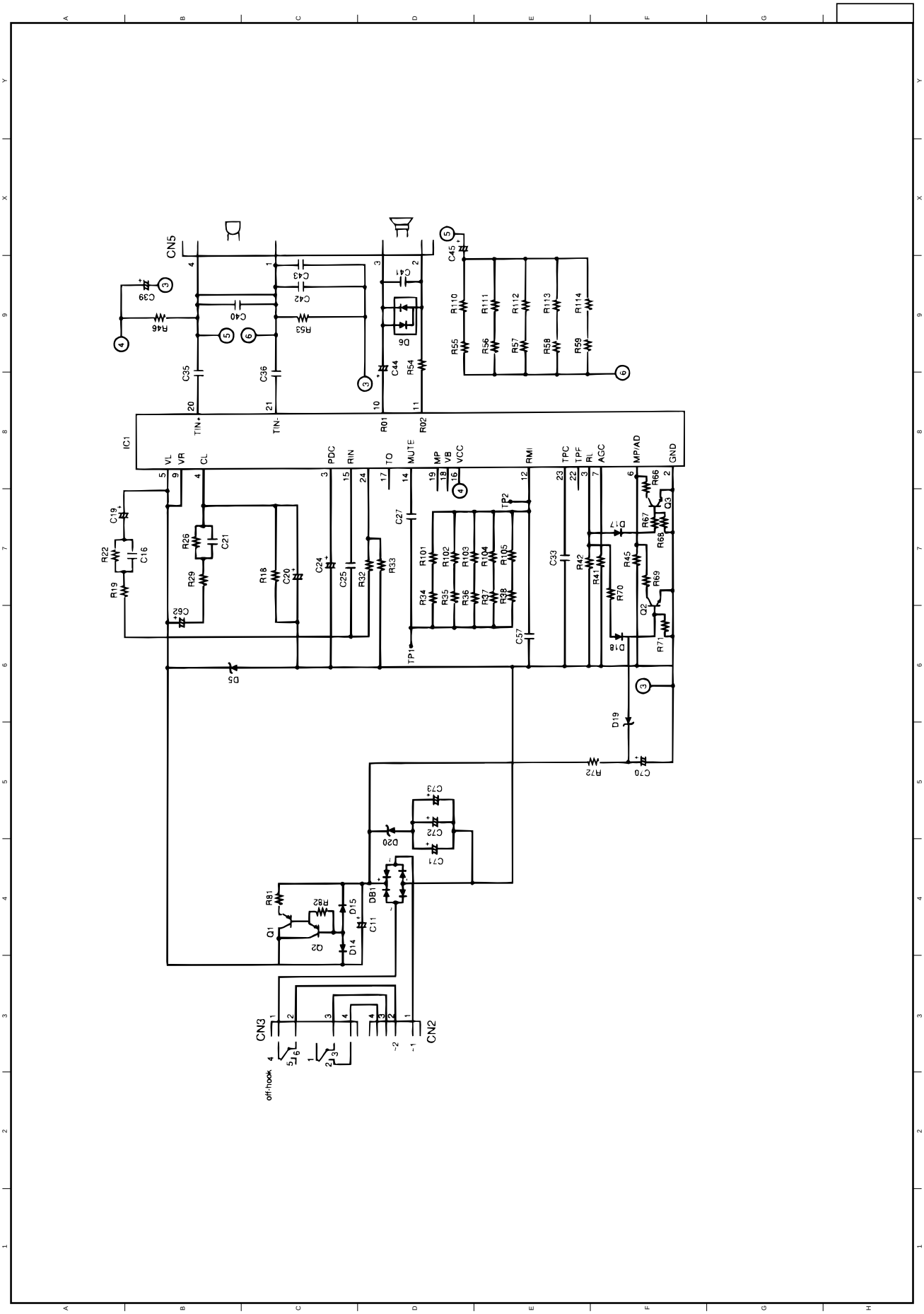

TEL-W2F-PCB Circuit Diagram (1/1)
(3SS3528-1035G007)

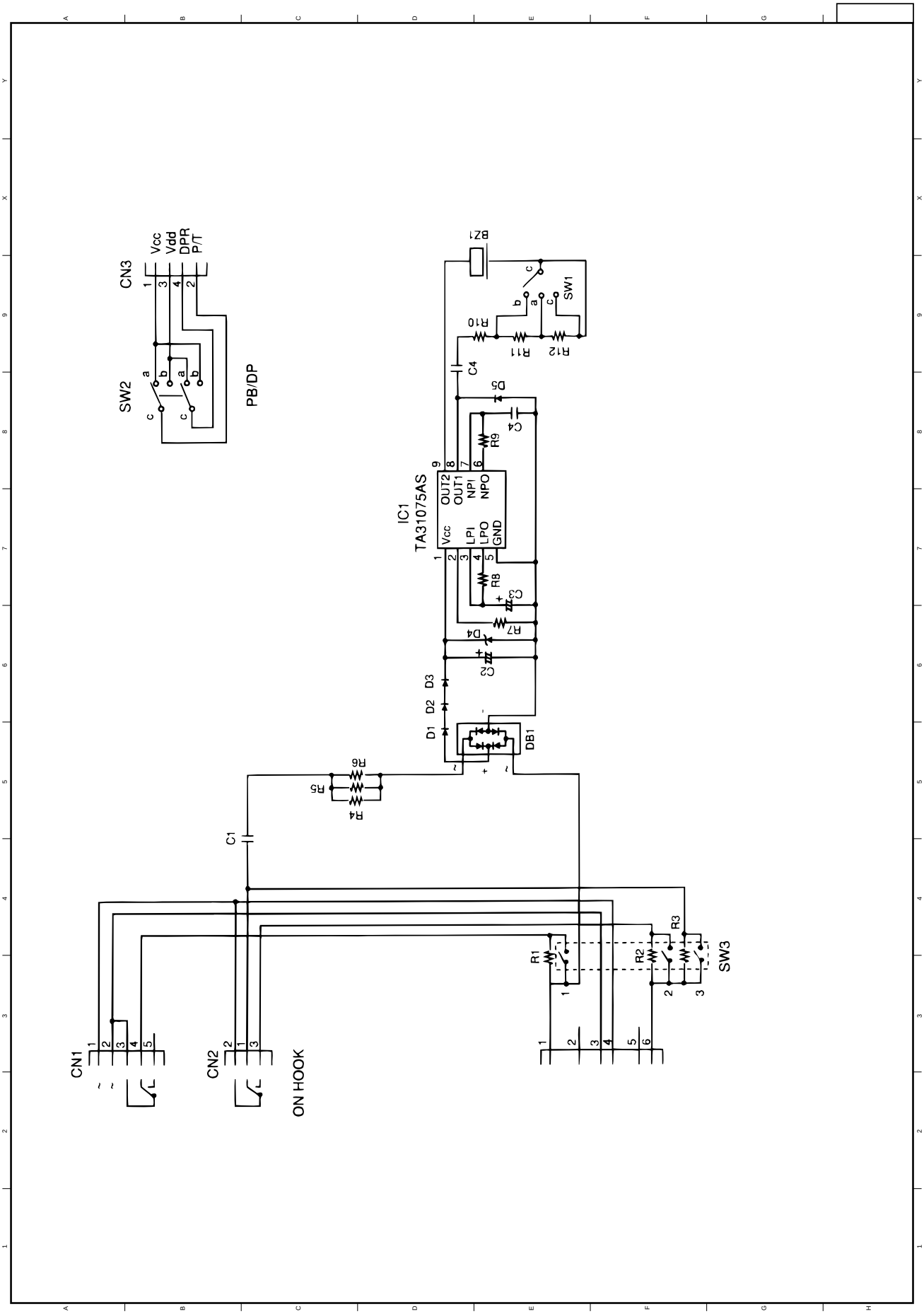

NTIF-PCB Circuit Diagram (1/1)
(3SS5003-6261)

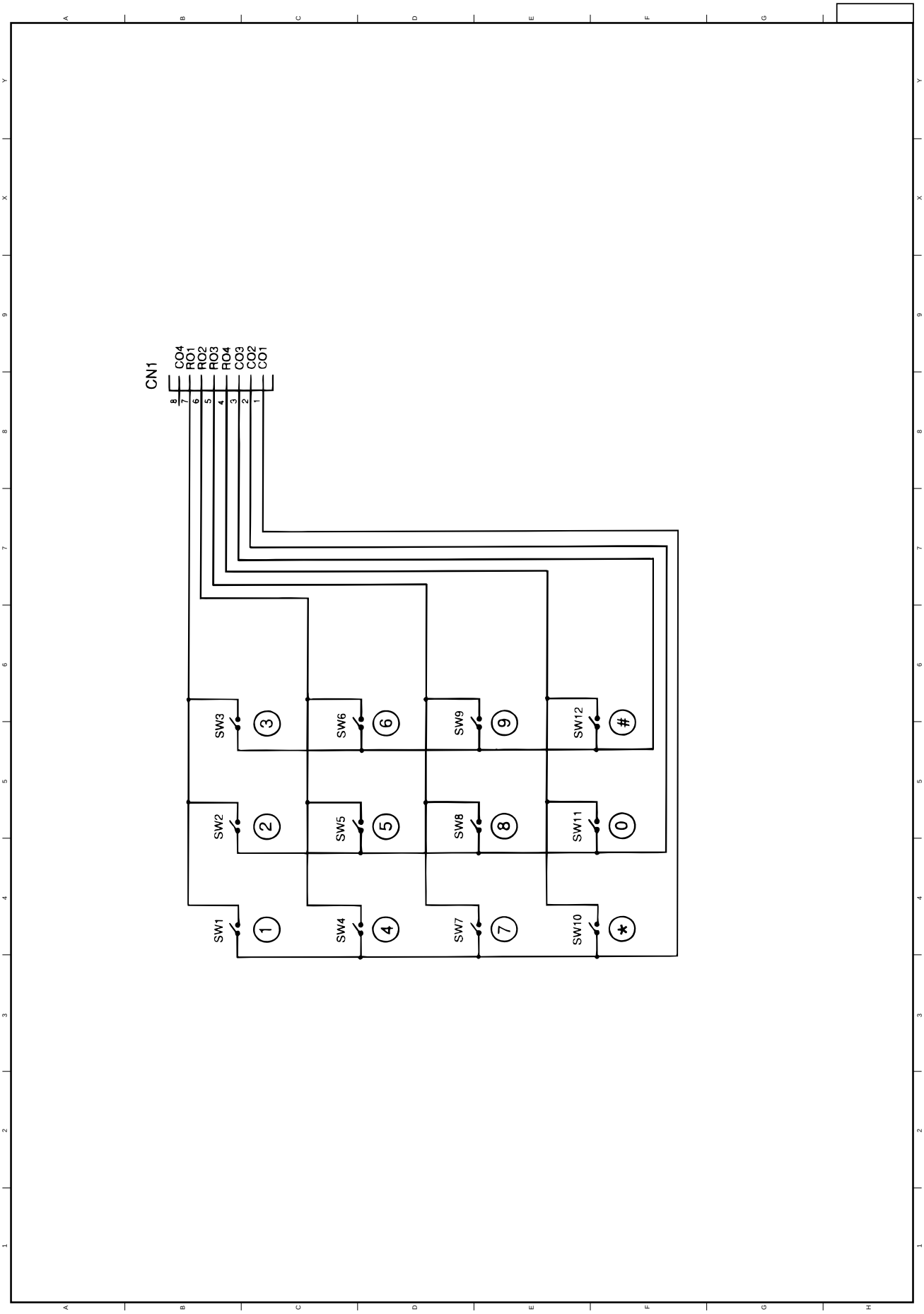

TEN KEY-PCB Circuit Diagram (1/1)
(3SS5003-6260)

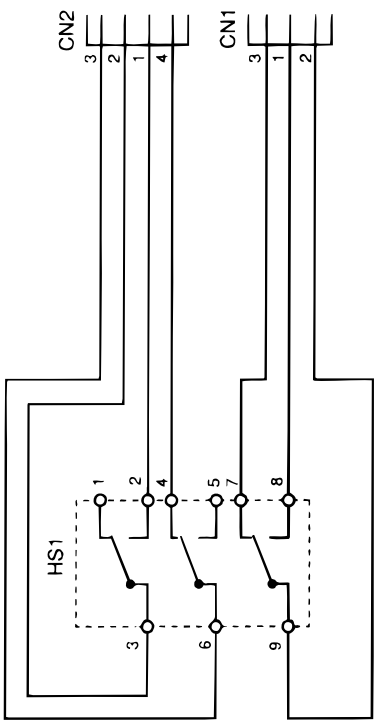

HOOK-PCB Circuit Diagram (1/1)
(3SS5003-6263)

APPENDIX D MECHANICAL EXPANDED VIEW DRAWING AND PARTS LIST

Section 1 CABINET ASSEMBLY

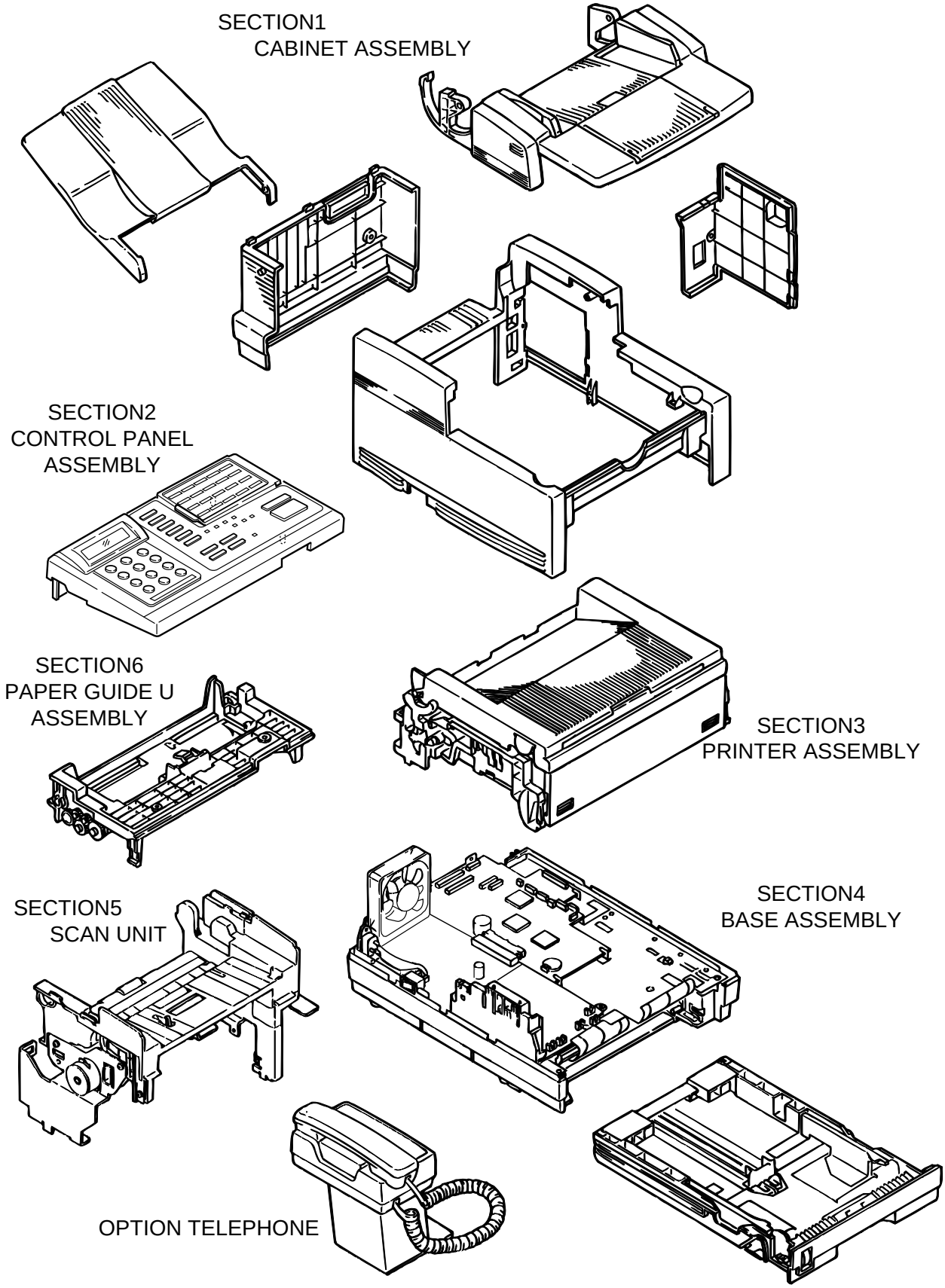

Section 1 CABINET ASSEMBLY

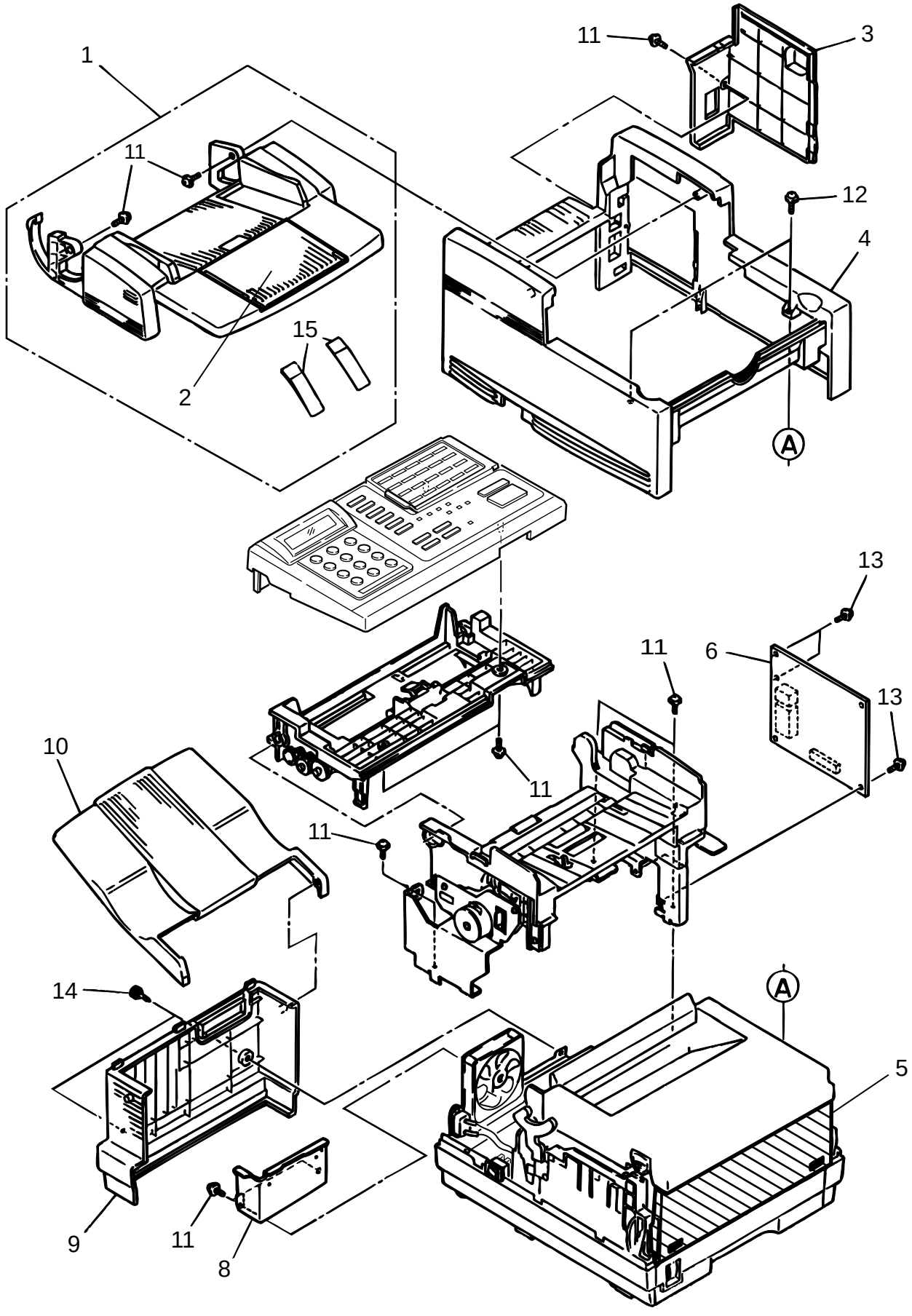

Section 1 CABINET ASSEMBLY

Rev.	No.	Oki parts Number	Description	Q ty	Remarks
	1	50607301	Document Hopper Assy.	1	
	2	50220901	Sub-Hopper Plate	1	
	3	41271001	NCU Cover	1	
	4	53075801	Main Cover	1	
	5	51011001	Manual Feed Guide Assy.	1	
	6	41143901	PCB: NCU	1	
	7				
	8	51019501	Partition Plate	1	
	9	53076001	Rear Cover	1	
	10	50221001	Stacker Cover	1	
	11		Screw		
	12		Screw		
	13		Screw		
	14	50317601	Knob Screw	2	
	15		Film Assist	3	

Section 2 CONTROL PANEL ASSEMBLY

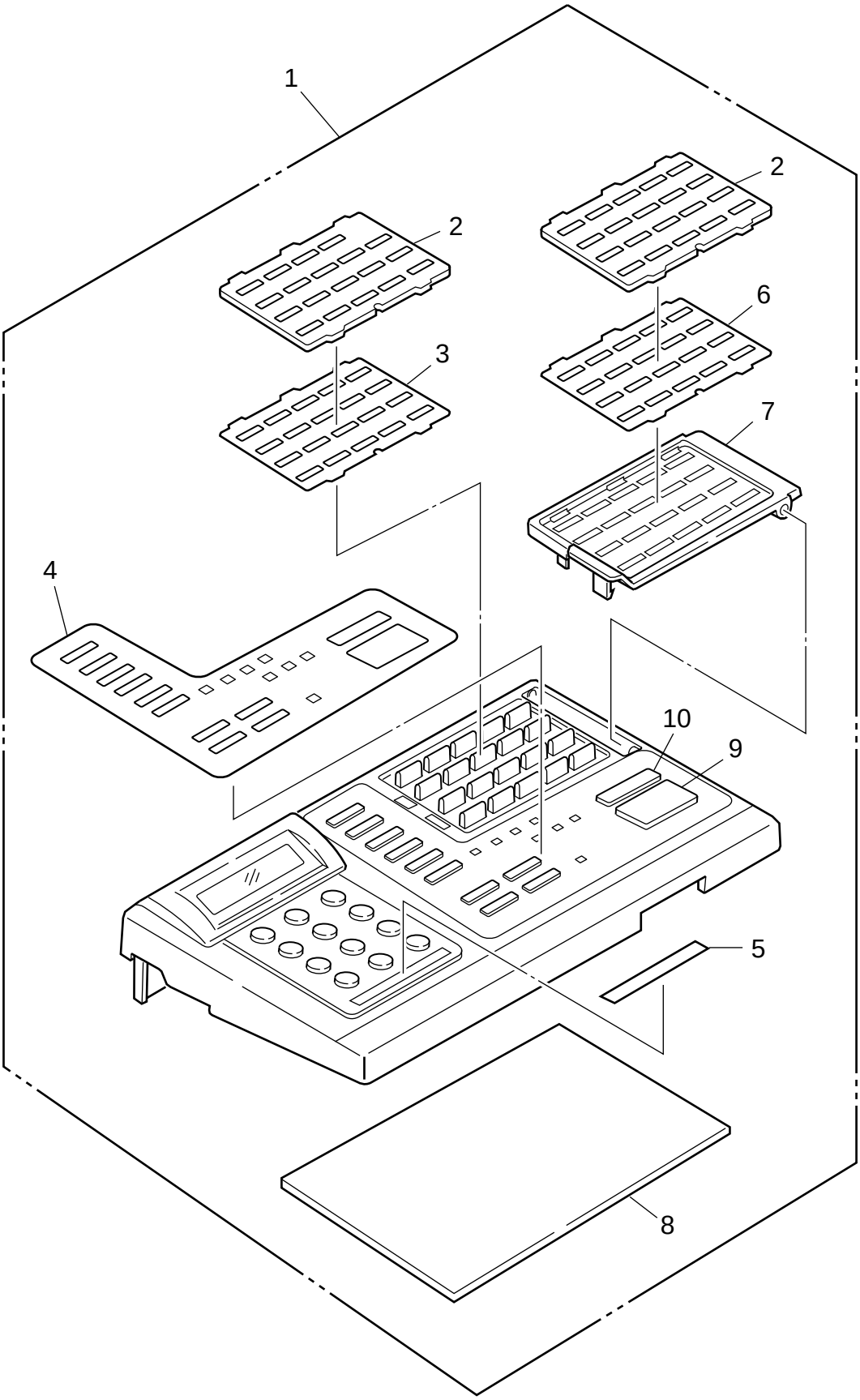

Section 2 CONTROL PANEL ASSEMBLY

Rev.	No.	Oki parts Number	Description	Q ty	Remarks
	1	41260801	Cover Assy.: OP Panel	1	
	2	41261401	Film: Onetouch	2	
	3	41261301	Sheet: Onetouch	1	
	4	41261201	Sheet: Function	1	
	5		Ten Key Label	1	Part of Item No. 1
	6		Sheet: Onetouch	1	Part of Item No. 1
	7	41261001	Cover: Onetouch	1	
	8	41178701	PCB: P60	1	
	9		Button: Start	1	Part of Item No. 1
	10		Button: Stop	1	Part of Item No. 1

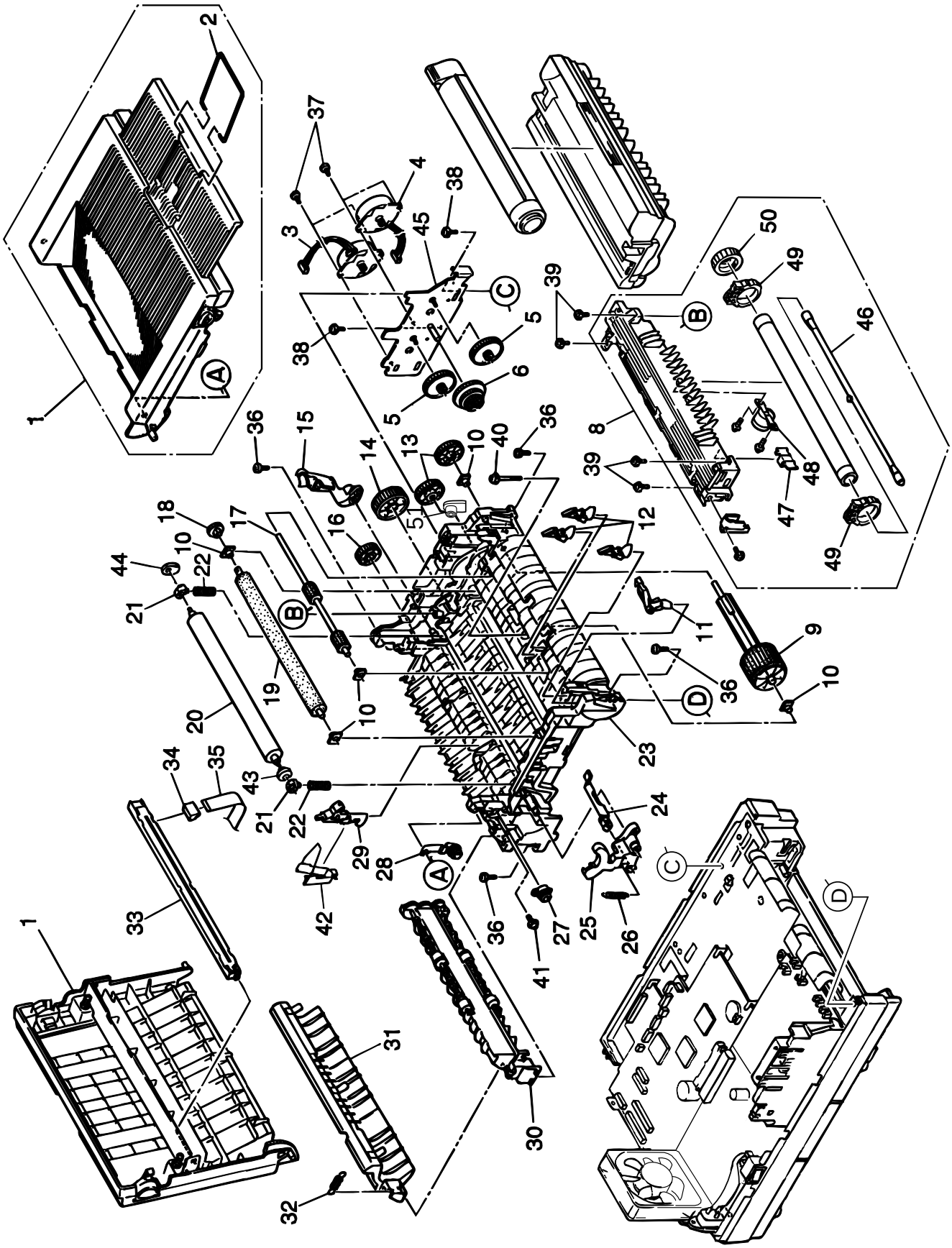

Section 3 PRINTER ASSEMBLY 1/2

Rev.	No.	Oki parts Number	Description	Q ty	Remarks
	1	53077801	Stacker Cover Assy.	1	
	2	51013801	Guide Wire	1	
	3	56512701	Pulse Motor (Main)	1	
	4	56512601	Pulse Motor (Resist)	1	
	5	51225701	Idle Gear A	2	
	6	51229301	Reduction Gear	1	
	8	50220801	Fusing Unit Assy. (120V)	1	
	9	50219601	Hopping Roller Assy.	1	
	10	51607402	Bearing A	5	
	11	50405501	Toner Sensor Assembly	1	
	12	51010701	Sensor Plate (Inlet)	3	
	13	51228901	One-way Clutch Gear	2	
	14	51229101	Idle Gear B	1	
	15	50805901	Reset Lever (R)	1	
	16	51229201	Idle Gear C	1	
	17	53342501	Resistration Roller	1	
	18	51236601	Transfer Roller Gear	1	
	19	50409301	Transfer Roller	1	
	20	53343701	Back-up Roller	1	
	21	51607601	Bushing A	2	
	22	50925301	Bias Spring A	2	
	23	50223201	Lower Base Sub Assy.	1	
	24	53068901	Switch Arm Lever	1	
	25	50805801	Reset Lever (L)	1	
	26	50924201	Reset Spring	1	
	27	51229401	Damper Frame	1	
	28	53069101	Damper Arm Assembly	1	
	29	51010802	Eject Sensor Lever Assembly	1	
	30	50409901	Eject Roller Assy.	1	
	31	51019201	Release Guide Assy.	1	
	32	50930001	Release Spring	1	
	33	56112101	LED Head Unit	1	
	34	56730201	PX-14 PC Connector	1	
	35	56632401	LED Cable Assy.	1	
	36		Screw		
	37		Screw		
	38		Screw		
	39		Screw		
	40		Screw		
	41		Screw		
	42	40778901	Sensor Wire Assembly	1	
	43	50517001	Washer B	1	
	44	50517201	Washer C	1	
	45	51709901	Motor Plate Assembly	1	

Rev.	No.	Oki parts Number	Description	Q ty	Remarks
	46		Halogen Lamp (Q)-F120	1	Part of Item No. 8
	47		Heat Sensor	1	Part of Item No. 8
	48		Thermostat A	1	Part of Item No. 8
	49		Bearing B	2	Part of Item No. 8
	50		Gear A	1	Part of Item No. 8
	51	51607501	Bearing R	1	

Section 4 BASE ASSEMBLY

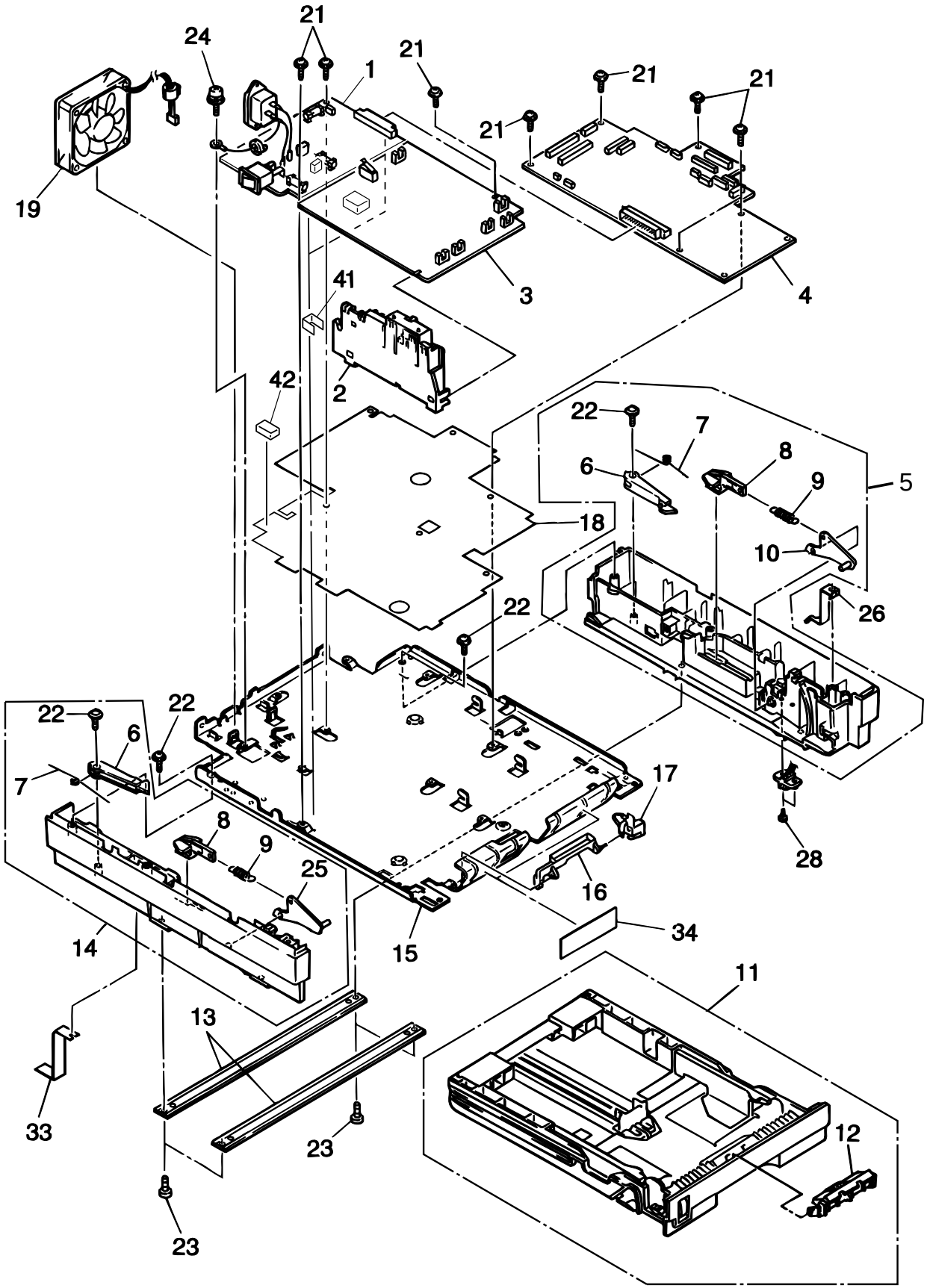

Section 4 BASE ASSEMBLY

Rev.	No.	Oki parts Number	Description	Q ty	Remarks
	1	41066901	PWR unit-ACDC Switch 120V	1	
	2	56730001	Contact Assy.	1	
	3	41144001	PCB: H08	1	
	4	41616401	PCB: M60	1	
	5	51024301	Cassette Guide Assy. (R)	1	
	6	50808401	Cassette Lock Lever	2	
	7	50929501	Cassette Lock Spring	2	
	8	53345201	Link Pull Lever	2	
	9	50929901	Sheet Spring	2	
	10	50808601	Sheet Link Assy. (R)	1	
	11	50110501	Paper Cassette Assy.	1	
	12	40259701	Frame Assy.-Sepa	1	
	13	51608801	Beam Plate	2	
	14	51024201	Cassette Guide Assy. (L)	1	
	15	51018901	Base Plate	1	
	16	51011501	Cassette Detection Lever	1	
	17	51019701	Paper End Sensor Lever	1	
	18	51711301	Insulator Plate	1	
	19	41348401	Motor: DC Fan	1	
	20				
	21		Screw		
	22		Screw		
	23		Screw		
	24		Screw		
	25	50805801	Sheet Link Assy. (L)	1	
	26	51023701	FG Plate C	1	
	27		Screw		
	28		Screw		
	29				
	30				
	31				
	32				
	33	51023601	FG Plate D	1	
	34		Polyethylene Tape	2	
	35				
	36				
	37				
	38				
	39				
	40				
	41	41319501	Bracket-Support: PSU	2	
	42	41076201	Spacer-Rubber: PSU	1	

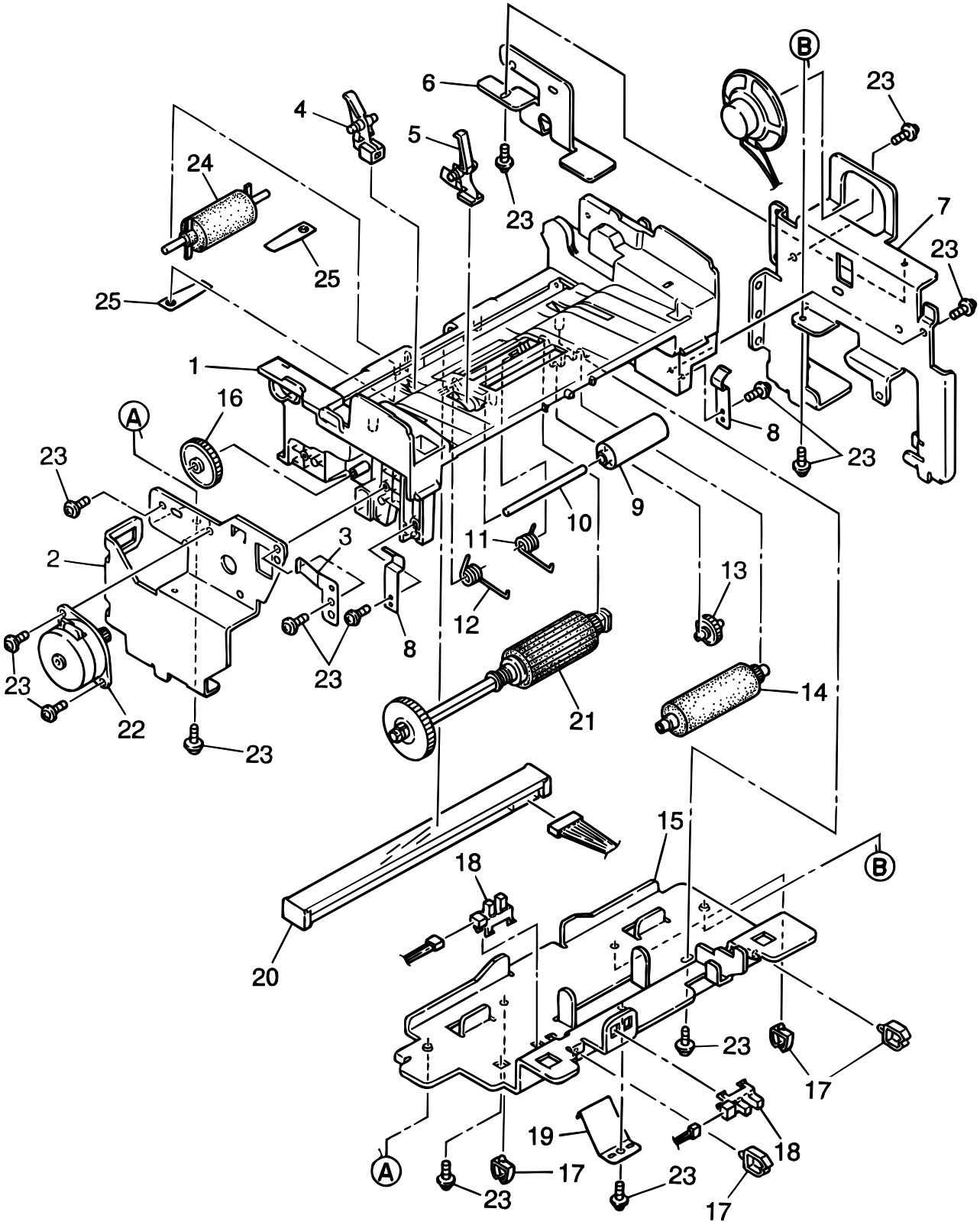
1
2
3
4
5
6
7
8
9
10
11
12
13
14
15
16
17
18
19
20
21
22
23
24
25
A
B

Section 5 SCAN UNIT

Rev.	No.	Oki parts Number	Description	Q ty	Remarks
	1	53350701	Scanner Frame	1	
	2	50221101	Scanner Base Frame (L)	1	
	3	51019901	ADF Ground Plate	1	
	4	50808801	PC2 Lever	1	
	5	50808701	PC1 Lever	1	
	6	51020001	Pocket Plate	1	
	7	50221201	Scanner Base Frame (R)	1	
	8	50930101	Latch Spring	2	
	9	50406201	Pinch Roller	1	
	10	51113701	Pinch Roller Shaft	1	
	11	50930301	Pinch Spring R	1	
	12	50930201	Pinch Spring L	1	
	13	51229501	Gear (Z20)	1	
	14	50406101	Sub-roller Assy.	1	
	15	51020101	Scanner Bottom Plate	1	
	16	51236301	Gear (Z81/15)	1	
	17	50708701	Mini Clamp Holder	4	
	18	40135301	Photo-Interrupter	2	
	19	50930401	Sensor Spring	1	
	20	40141401	Contact Image Sensor-A4	1	
	21	50410201	ADF Roller Assy.	1	
	22	40047601	Motor-S (FX-VP)	1	
	23		Screw		
	24	50411501	Eject Pinch Roller	1	
	25	50932301	Eject Pinch Spring	2	

Section 6 PAPER GUIDE U ASSEMBLY

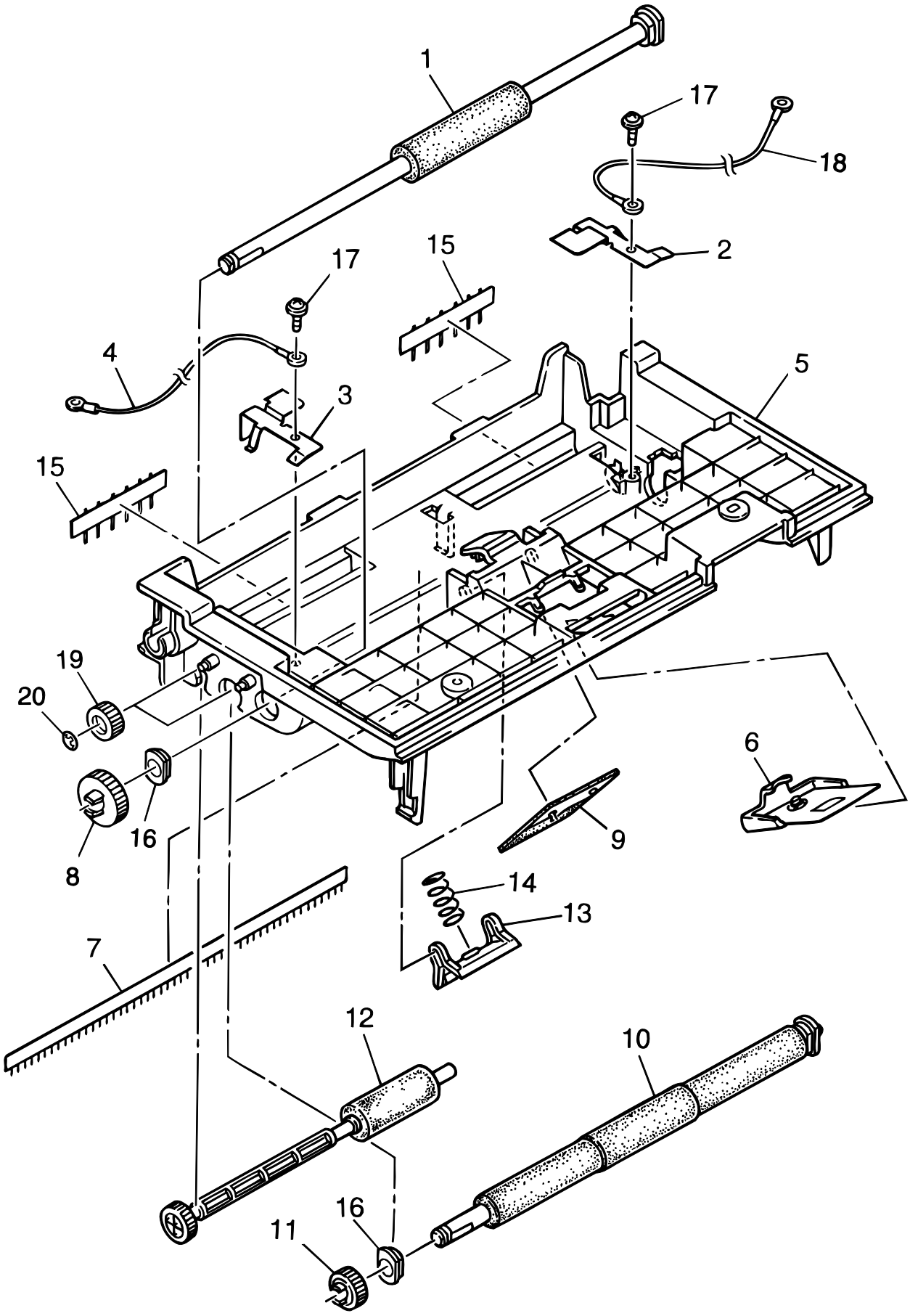

Section 6 PAPER GUIDE U ASSEMBLY

Rev.	No.	Oki parts Number	Description	Q ty	Remarks
	1	50410301	Feed Roller Assy.	1	
	2	51023801	Ground Plate (SR)	1	
	3	51023901	Ground Plate (SL)	1	
	4	56634702	Ground Strap	1	
	5	51024501	Paper Guide (U)	1	
	6	51020501	Pinch Plate Assy.	1	
	7	51305101	Anti-static Brush	1	
	8	51236401	Gear (Z28)	1	
	9	53344901	Separation Rubber Assy.	1	
	10	51410501	Sensor Roller Assy.	1	
	11	51236501	Gear (Z22)	1	
	12	51410401	Exit Roller Assy.	1	
	13	53339801	Back-up Plate	1	
	14	50930501	ADF Spring	1	
	15	51305102	Anti-static Brush	2	
	16	51608901	ADF Bearing	2	
	17		Screw		
	18	56634703	Ground Strap	1	
	19	51226101	Gear (Z16)	2	
	20	50709103	CS-Ring (CS4-SUS)	2	

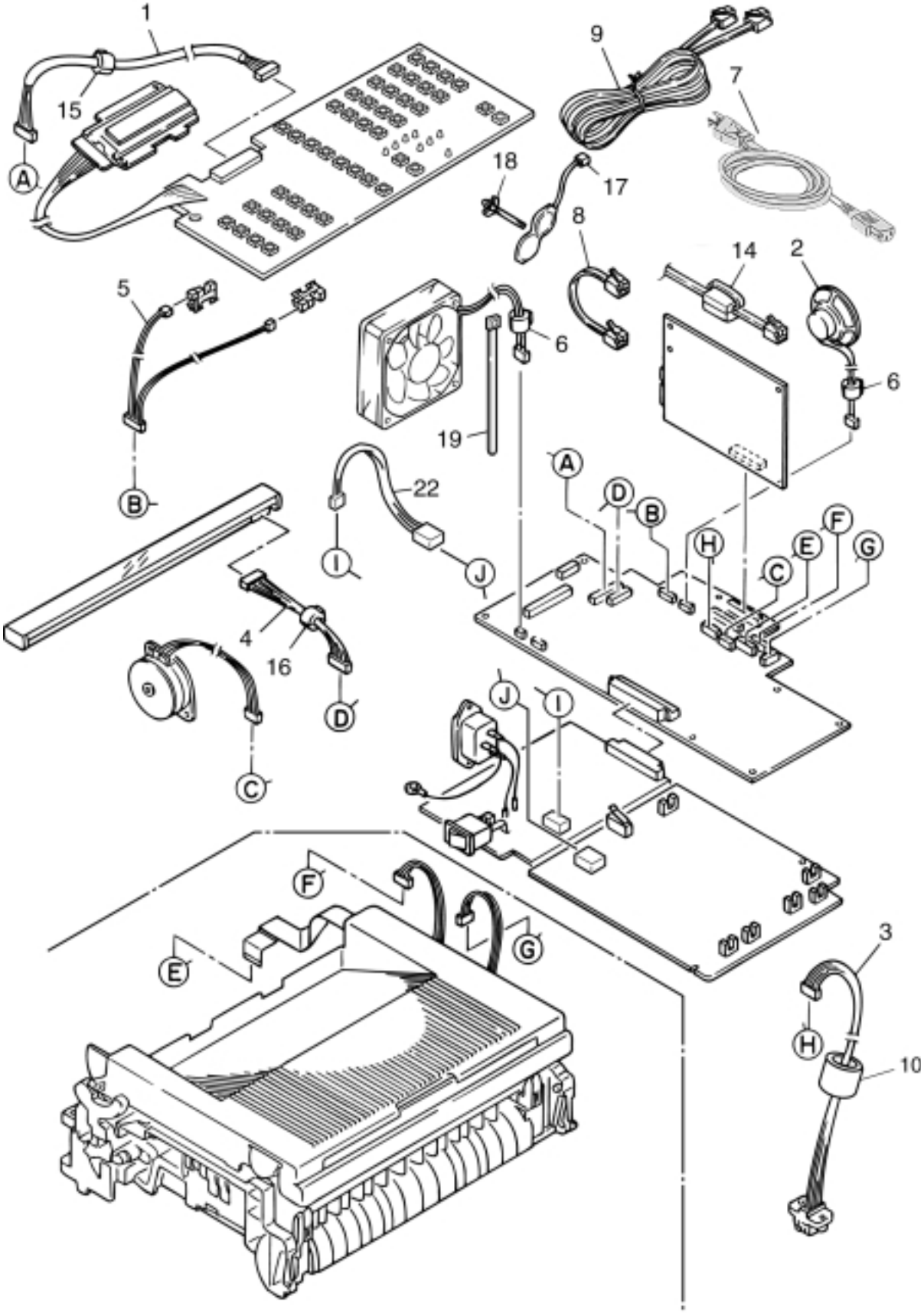
1
15
A
9
7
18
17
8
14
2
5
6
6
19
B
22
A
D
B
H
F
E
G
C
I
J
4
16
D
C
J
I
F
E
G
3
H
10

Section 7 CABLES

Rev.	No.	Oki parts Number	Description	Q ty	Remarks
	1	40040002	Cable: OPE	1	
	2	57001701	Speaker	1	
	3		Cable: 2nd Tray	1	
	4		Cable: CIS	1	
	5		Cable: Sensors	1	(PC1/2)
	6		TFC-16813 Core	2	(FAN/Speaker)
	7	56618901	AC Cord	1	
	8		Cord (TEL1-TEL2)	1	
	9	56621001	TEL/LINE Cable	1	
	10		TR-28-16-20 Core	1	(2nd Tray Cable)
	11				
	12				
	13				
	14		5FC-8 Core	1	(Line Cable)
	15		TFC-23-11-14 Core	1	(OPE Cable)
	16		Ferrite Core E	1	(Sensor Cable)
	17	56306901	Battery	1	
	18	50702001	Snap Band	1	
	19		Tie Wrap	1	
	20				
	21				
	22		Cable: PSU (High/Low)	1	

APPENDIX E Not used at this time

PREFACE

This Maintenance Manual is intended for the maintenance personnel and describes the field maintenance methods for Second Paper Feeder option of OKIFAX 5650 Facsimile Transceiver.

Refer to the Instruction sheet of High Capacity Second Paper Feeder option for equipment handling and operation methods.

1. OUTLINE

1.1 Functions

When the Second Paper Feeder is installed with the OKIFAX 5650 facsimile transceiver, the Second Paper Feeder is connected to the facsimile by a connector. The Second Paper Feeder supplies paper automatically through the operation of pulse motor (hopping), which is driven by signals sent from CPU of the Second Paper Feeder under the control of the facsimile.
The main functions are the followings:

- Paper that can be used:

[Paper Type]
- Standard paper: Xerox 4200 (20-lb)
- Special paper: PPC sheets; use of envelopes or thick paper is not possible.
- Cut sheet size: A4, Letter, Legal13, Legal14
- Special size: Paper width: 210 to 216mm
  Paper length: 279.4 to 355.6mm

[Weight]
- 16-lb to 24-lb (60 to 90 g/m^2)

- Paper setting quantity: 500 sheets of paper weighing 64 g/m^2

1.2 External View and Component Names

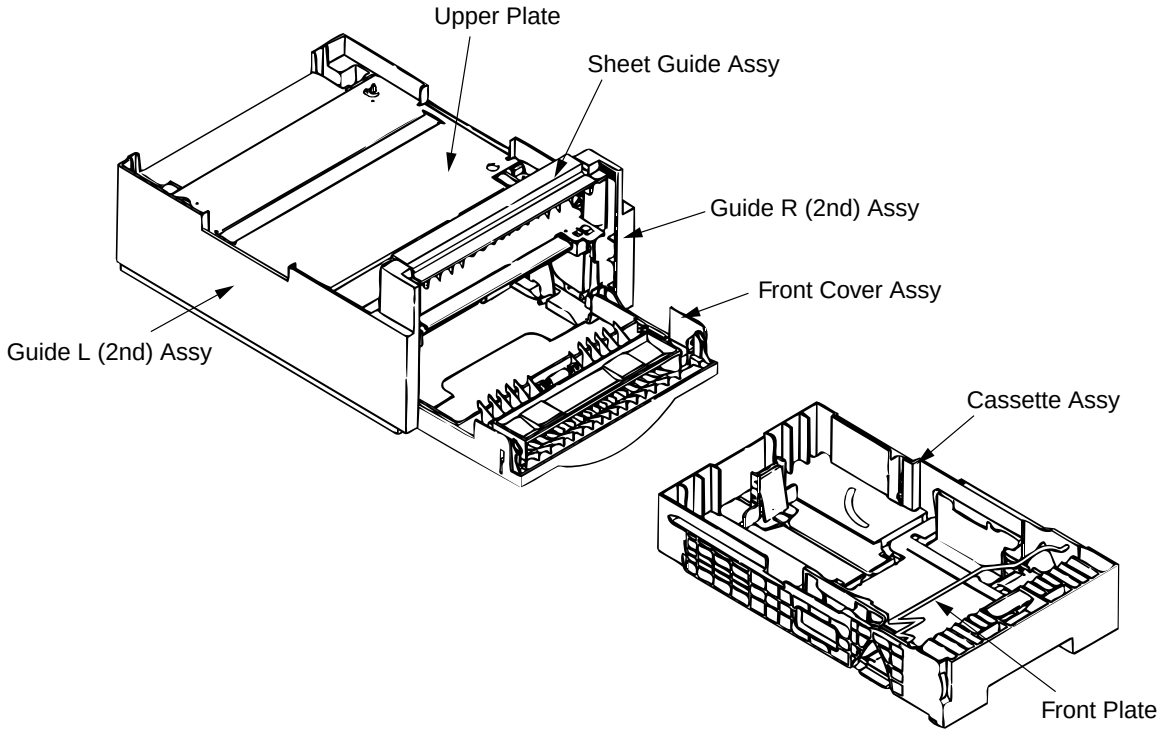

Figure 1.1 External View and Component Names

2. MECHANISM DESCRIPTION

2.1 General Mechanism

The Second Paper Feeder feeds the paper into the facsimile by receiving the signal from the facsimile, which drives the pulse motor inside the Second Paper Feeder, and this motion is transmitted to rotate the one-way clutch of the hopping frame assembly. The paper is delivered from the hopper into the facsimile through the turning of the hopping roller and feed roller.

Once delivered into the facsimile, the paper is then controlled and fed through by pulse motor (registration) of the facsimile.

2.2 Hopper Mechanism

The hopper automatically feeds the facsimile with the paper being set, single sheet at a time. When the paper is loaded in the paper cassette, it is then transported by the pulse motor, carrying forward only a single sheet caught by the separation rubber at a time.

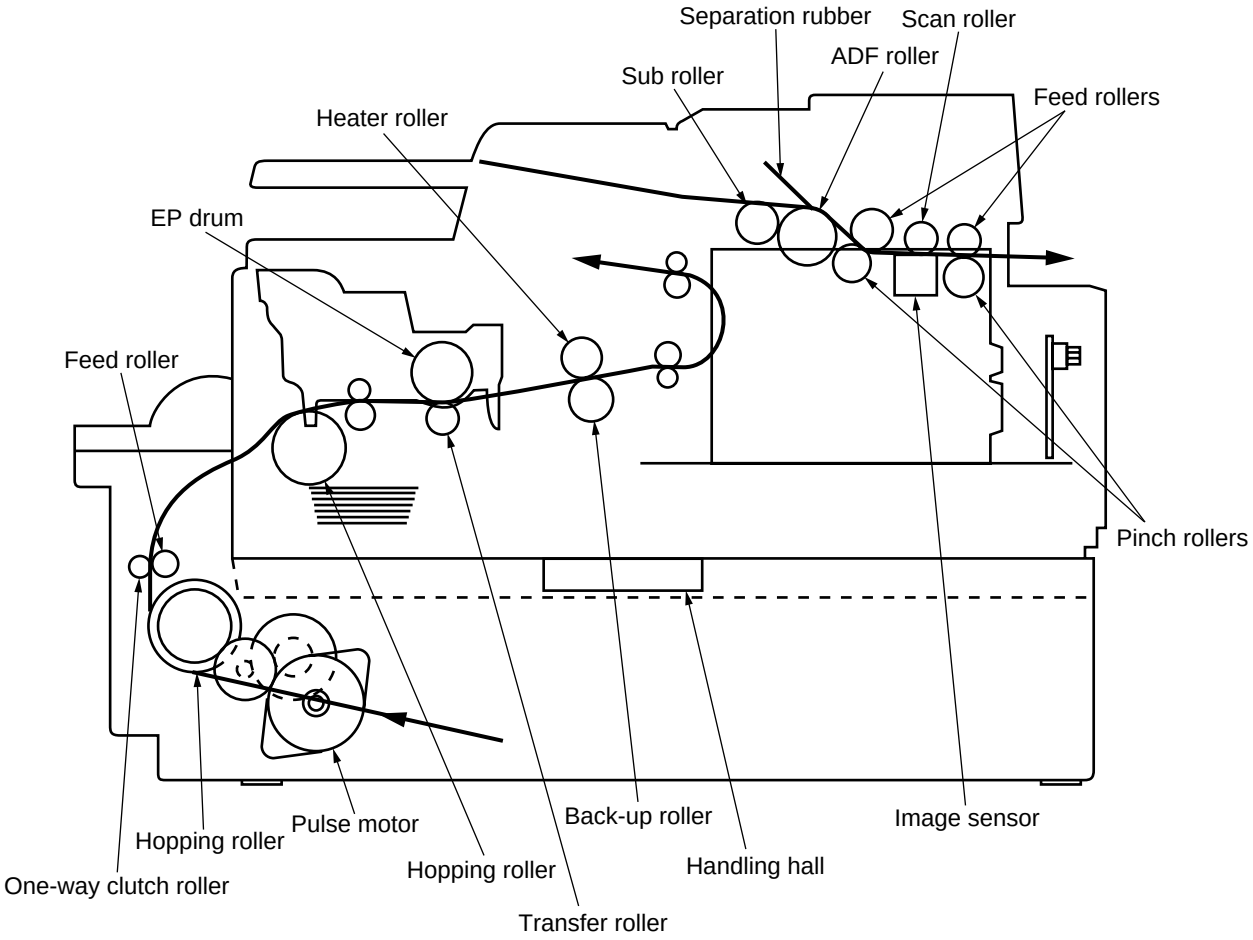

3. PARTS REPLACEMENT

This section covers the procedures for the disassembly, reassembly and installations in the field. This section describes the disassembly procedures, and for reassembly procedures, basically proceed with the disassembly procedures in the reverse order.

3.1 Precautions Concerning Parts Replacement

(1) Parts replacements must be carried out, by first turning the facsimile power switch off “O” and removing the facsimile from the Second Paper Feeder.

(2) Do not disassemble the Second Paper Feeder if it is operating normally.

(3) Establish the extent of disassembly suitable for the purpose of the procedure, and do not disassemble any more than necessary.

(4) Only specified service tools may be used.

(5) Disassembly must be carried out according to the prescribed procedures. Parts may be damaged if such procedures are not followed.

(6) Small parts such as screws and collars can easily be lost, therefore these parts should be temporarily fixed in the original location.

(7) When handling printed circuit boards, do not use any glove which may generate static electricity.

(8) Do not place the printed circuit boards directly on the equipment or floor.

[Service Tools]

Table 3.1 shows the tools required for the replacement of printed circuit boards, assemblies and units in the field.

Table 3.1 Service Tools

No.	Service Tools		Q'ty	Application	Remarks
1		No. 1-100 Philips screwdriver	1	2 ~ 2.5 mm screws	
2		No. 2-100 Philips screwdriver	1	3 ~ 5 mm screws	
3		No. 3-100 screwdriver	1		
4		Digital multimeter	1		
5		Pliers	1		

3.2 Parts Layout

This section describes the layout of the main components.

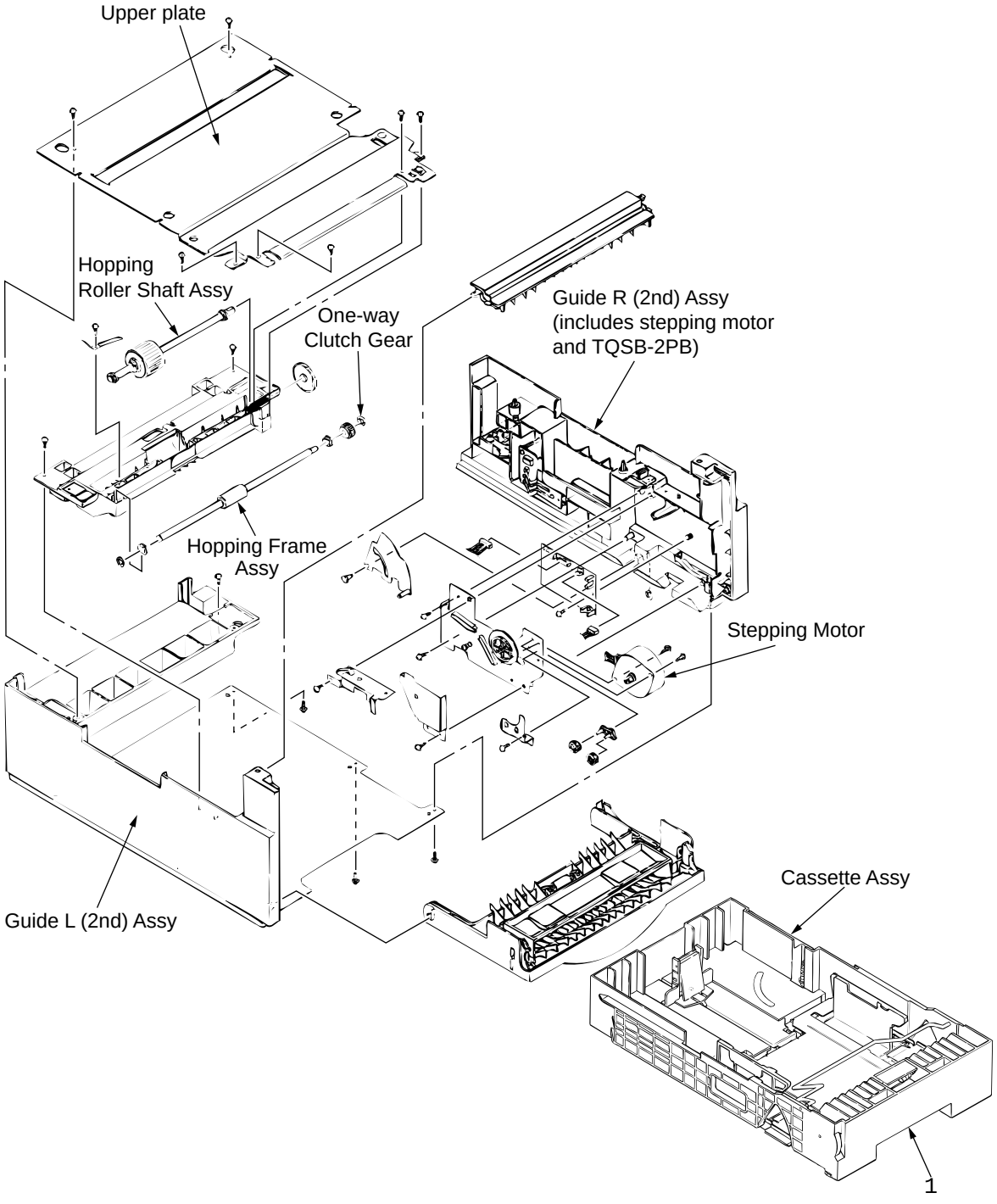

Figure 3.1

3.3 Parts Replacement Methods

This section description the parts replacement for the components listed in the disassembly order diagram below.

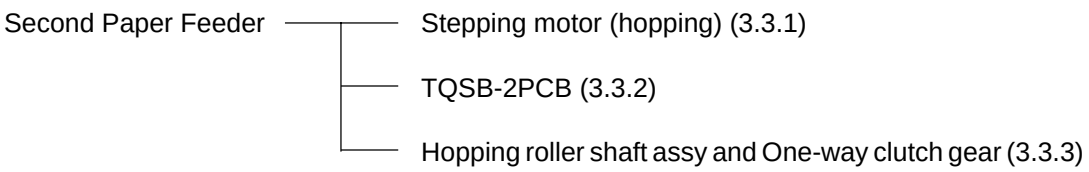

3.3.1 Stepping Motor (Hopping)

(1) Turn the facsimile power switch off, pull out the AC cord from the outlet. Remove the facsimile off Second Paper Feeder.
(2) Take the paper cassette assy 1 out of Second Paper Feeder.
(3) Remove six screws 2 and remove the upper plate 3. Remove two screws 5 and remove the hopping frame assy 6.
(4) Remove the front cover assy 4 off the guide boss on the guide L (2nd) assy 7 by bending the guide L (2nd) assy 7 in the direction of arrow shown in the magnified view below.
(5) Pull the sheet guide assy 8 in the direction of arrow ⓐ and also push in the direction of arrow ⓑ to unlock the notch, and bring the sheet guide assy 8 in the direction of arrow ⓒ to remove the sheet guide assy 8.

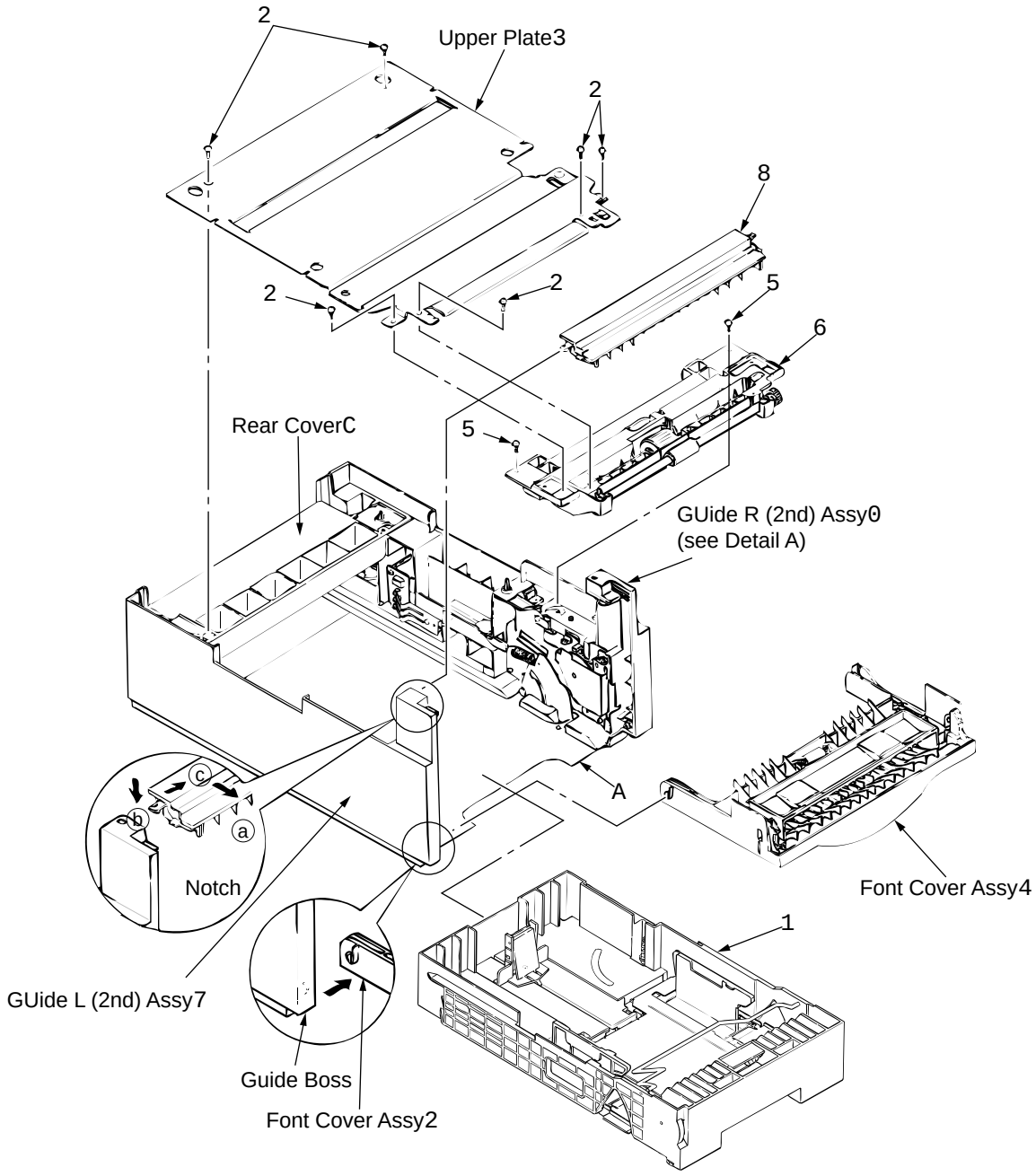

(6) Remove three screws 9 which are holding the guide R (2nd) assy 0 to the bottom plate A. Remove the screw B which is keeping the rear cover C and guide R (2nd) assy 0. Remove the guide R (2nd) assy 0.
(7) Remove the protect (M) D, guide bracket E, planet gears F and planet gear bracket G.
(8) Remove the E-ring H which is keeping the sheet link I on the guide R (2nd) assy 0, and pull out the hinge stand J.
(9) Remove three remaining screws K which are keeping the motor on the motor bracket L, and remove the connector off the Stepping Motor M.
(10) Remove two screws N on the Stepping Motor M.

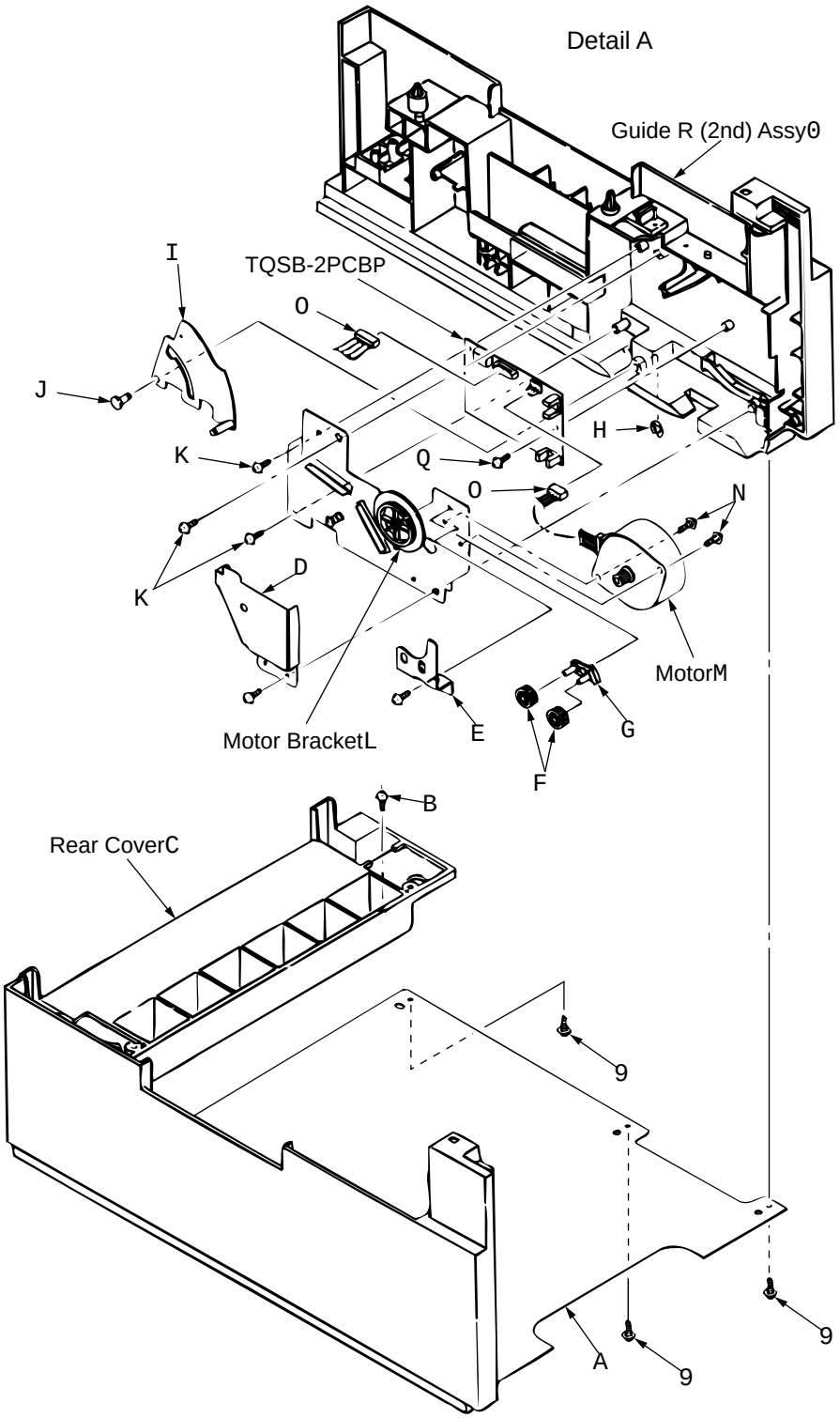

3.3.2 TQSB2-PCB

(1) Remove the pulse motor (see 3.3.1).
(2) Remove the connector 0 from the TQSB-2PCB P.
(3) Remove the screw Q and remove the TQSB-2PCB P.

Note : Refer to Detall A in the previous page.

3.3.3 Hopping Roller Shaft Assy and One-way Clutch Gear

(1) Follow up to step (3) of 3.3.1 and remove the hopping frame assy.
(2) Remove the screw 1 and remove the earth plate 2. Remove the sensor lever 7 and remove the ground plate 6. Remove the gear 3 and remove the metal bush 5 and Hopping Roller shaft Assy 4.
(3) Remove the E-ring A and remove the one-way clutch gear B on the right side of the feed roller 0.

Note : The metal bush C also comes off. Be careful not to lose it.

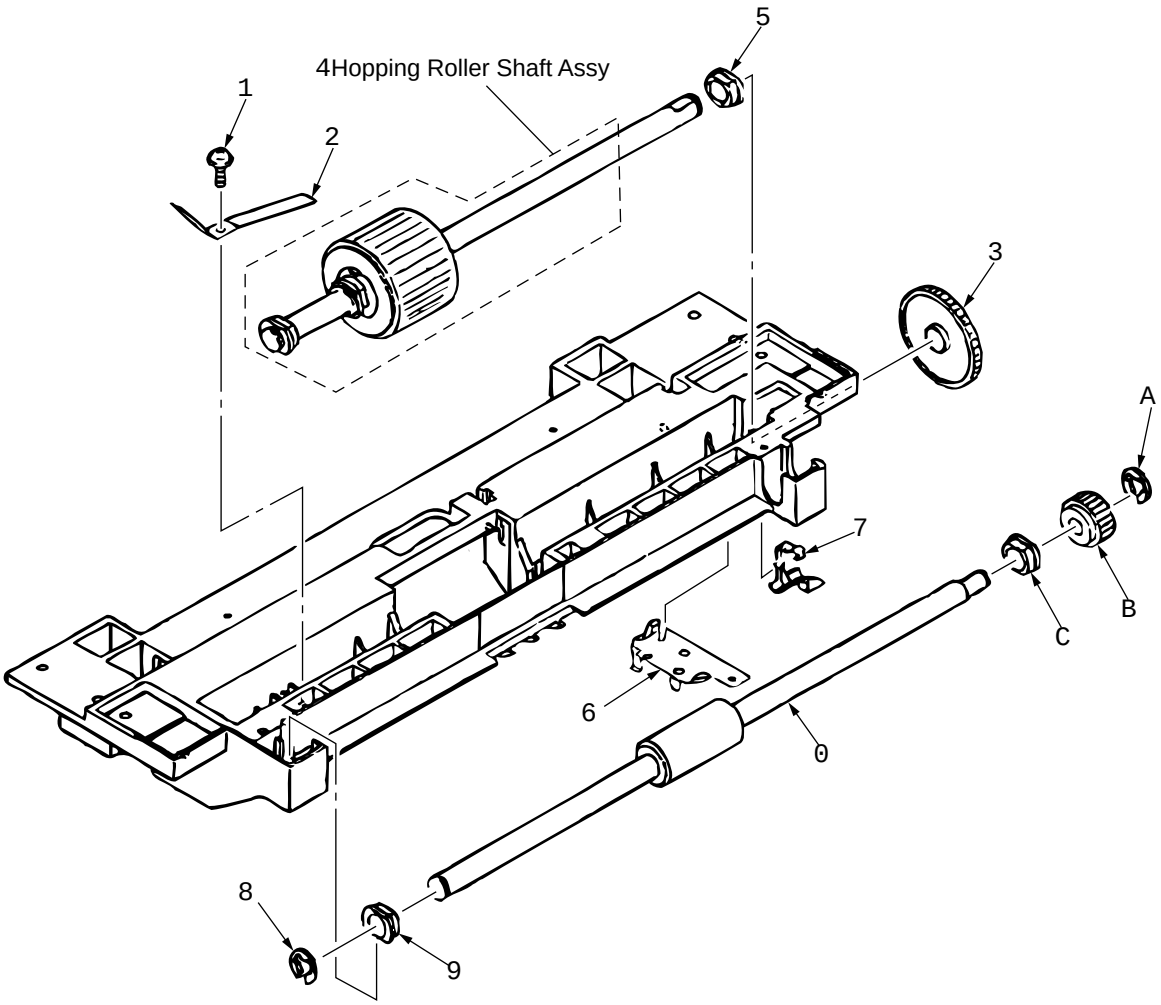

4. TROUBLESHOOTING

4.1 Precautions Prior to the Troubleshooting

(1) Go through the basic checking items provided in the facsimile Handbook.
(2) Obtain detailed information concerning the problem from the user.
(3) Go through checking in the conditions similar to that in which the problem occurred.

4.2 Preparations for the Troubleshooting

(1) Display on the Operator panel
The status of the problem is displayed on the LCD (Liquid Crystal Display) on the Operator panel. Go through the appropriate troubleshooting procedures according to the messages displayed on the LCD.

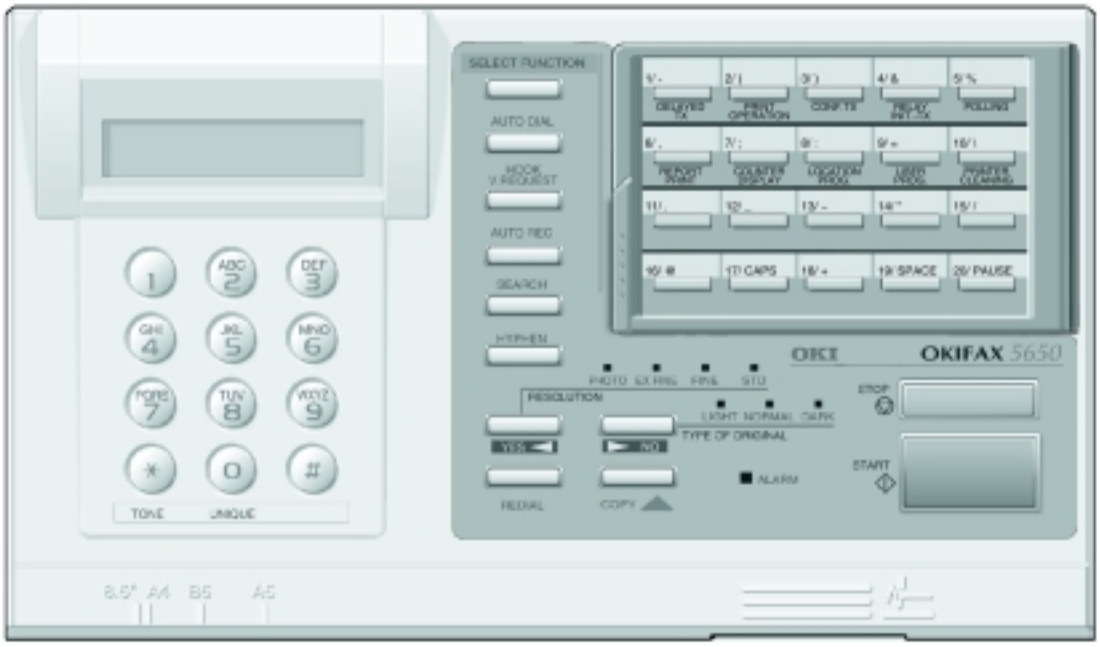

Control Panel of OKIFAX 5650

4.3 Troubleshooting Method

When a problem occurs, go through the troubleshooting according to the following procedure.

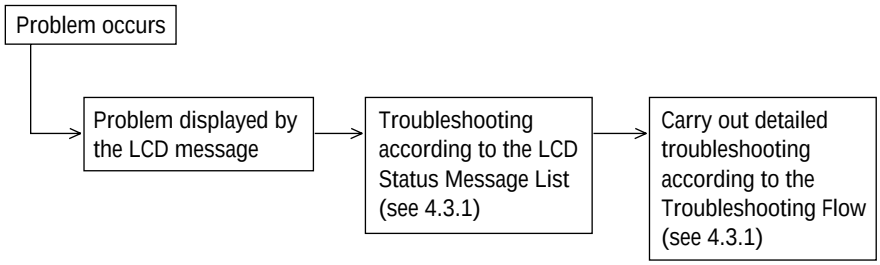

4.3.1 LCD Status Message List

The listing of the statuses and problems displayed in the form of messages on the LCD is provided in Table 41.

Classification	LCD Status Message	Description	Recovery method
Jam error (feeding) *1	[redacted] PAPER MIS-FEED[FAX] REPLACE PAPER	Notifies of occurrence of jam while the paper is being fed from Second Paper Feeder.	• Check the paper in the Second Paper Feeder. Carry out the recovery printing by opening and closing the cover, and turn the error display off. • When the problem occurs frequently, go through the Troubleshooting.
Jam error (ejection)	[redacted] PAPER JAM [FAX] REPLACE PAPER	Notifies of occurrence of jam while the paper is being ejected from the Second Paper Feeder.	• Check the paper in the Second Paper Feeder. Carry out the recovery printing by opening and closing the cover, and turn the error display off.
Paper size error	[redacted] PAPER JAM [FAX] REPLACE PAPER	Notifies of incorrect size paper feeding from Second Paper Feeder.	• Check the paper in the Second Paper Feeder. Also check to see if there was a feeding of multiple sheets. Carry out the recovery printing by opening and closing the cover, and turn the error display off.
Tray paper out *2	[redacted] NO PAPER [FAX] REPLACE PAPER	Notifies of no paper state when both cassettes (1st and 2nd) has no recording paper.	• Load the paper in Second Paper Feeder.

*1: Indicates the same message on the display, when 1st or 2nd cassette becomes jam error (feeding).
*2: However, if 1st cassette has recording paper, LCD indicates the standby mode on the display and alarm message does not indicate.

• (JAM error)

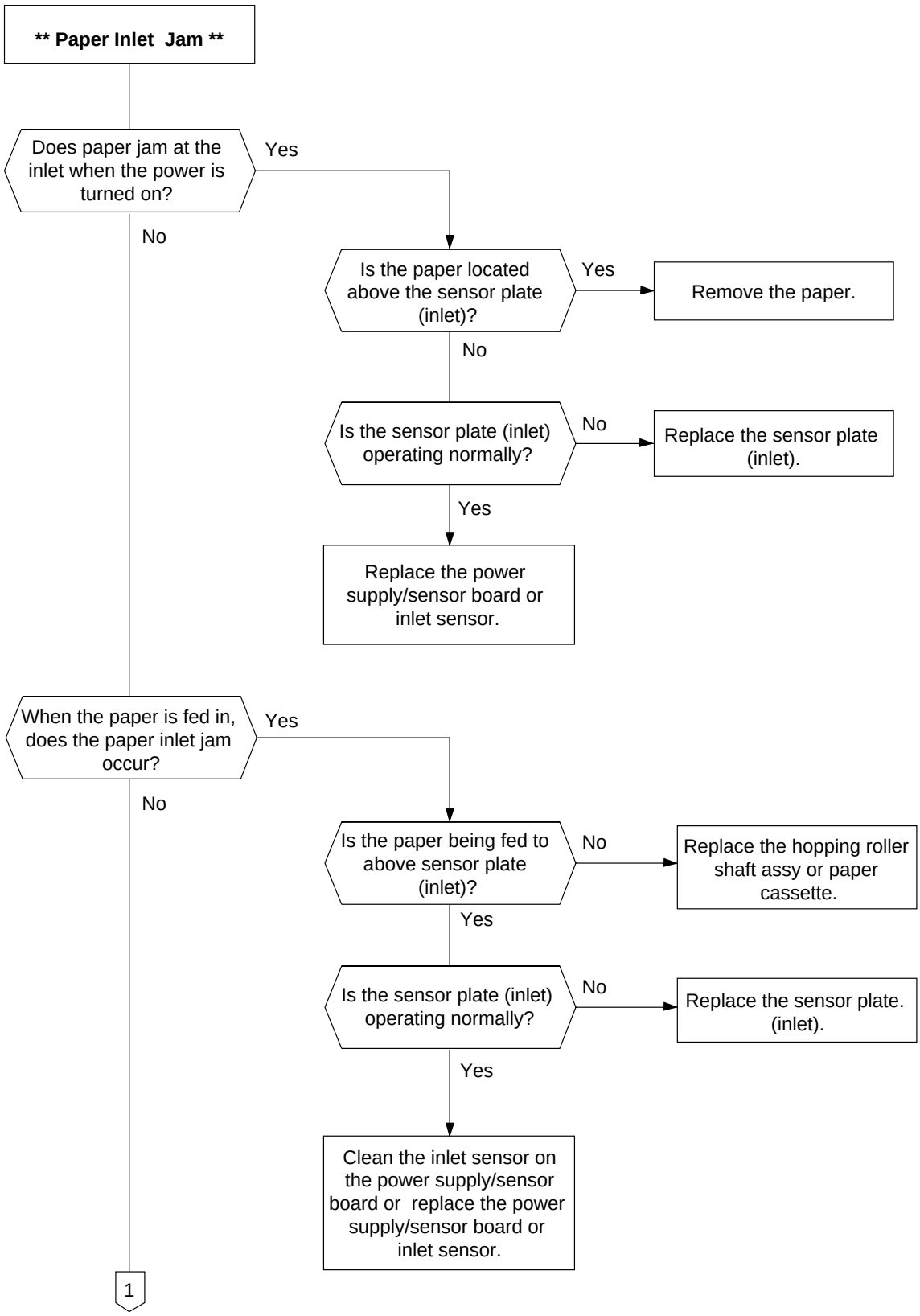
** Paper Inlet Jam **
Does paper jam at the inlet when the power is turned on?
Yes
No
Is the paper located above the sensor plate (inlet)?
Yes
Remove the paper.
No
Is the sensor plate (inlet) operating normally?
No
Replace the sensor plate (inlet).
Yes
Replace the power supply/sensor board or inlet sensor.
When the paper is fed in, does the paper inlet jam occur?
Yes
No
Is the paper being fed to above sensor plate (inlet)?
No
Replace the hopping roller shaft assy or paper cassette.
Yes
Is the sensor plate (inlet) operating normally?
No
Replace the sensor plate. (inlet).
Yes
Clean the inlet sensor on the power supply/sensor board or replace the power supply/sensor board or inlet sensor.
1

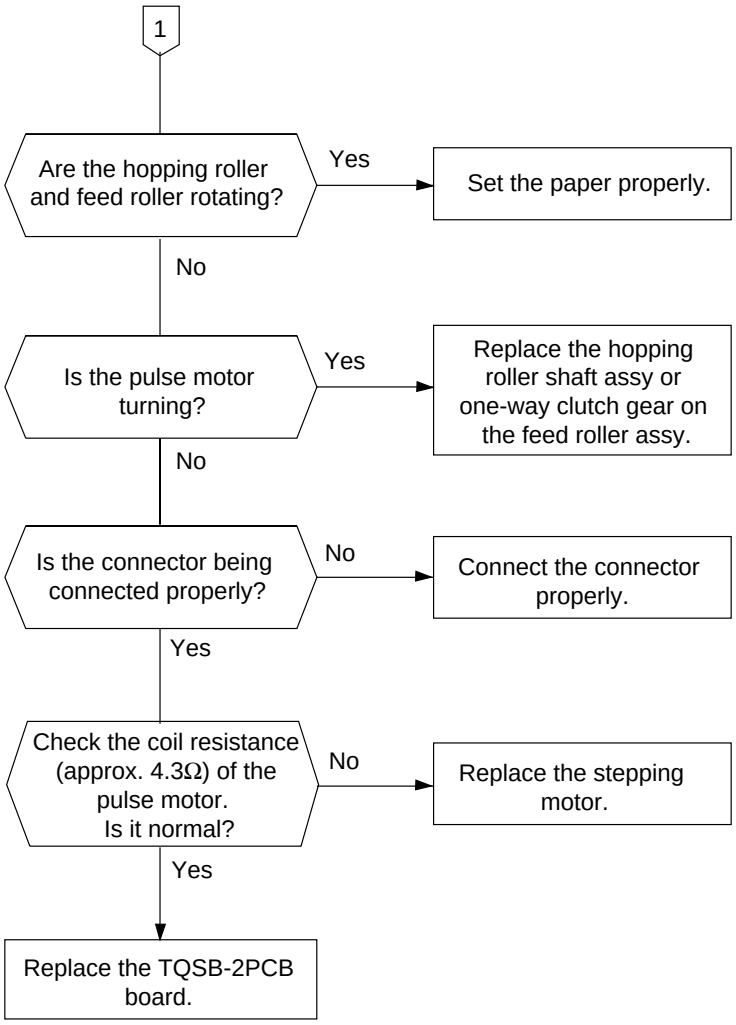
1
Are the hopping roller and feed roller rotating?
Yes
Set the paper properly.
No
Is the pulse motor turning?
Yes
Replace the hopping roller shaft assy or one-way clutch gear on the feed roller assy.
No
Is the connector being connected properly?
No
Connect the connector properly.
Yes
Check the coil resistance (approx. 4.3Ω) of the pulse motor. Is it normal?
No
Replace the stepping motor.
Yes
Replace the TQSB-2PCB board.

5. CONNECTION DIAGRAM

5.1 Interconnection Diagram

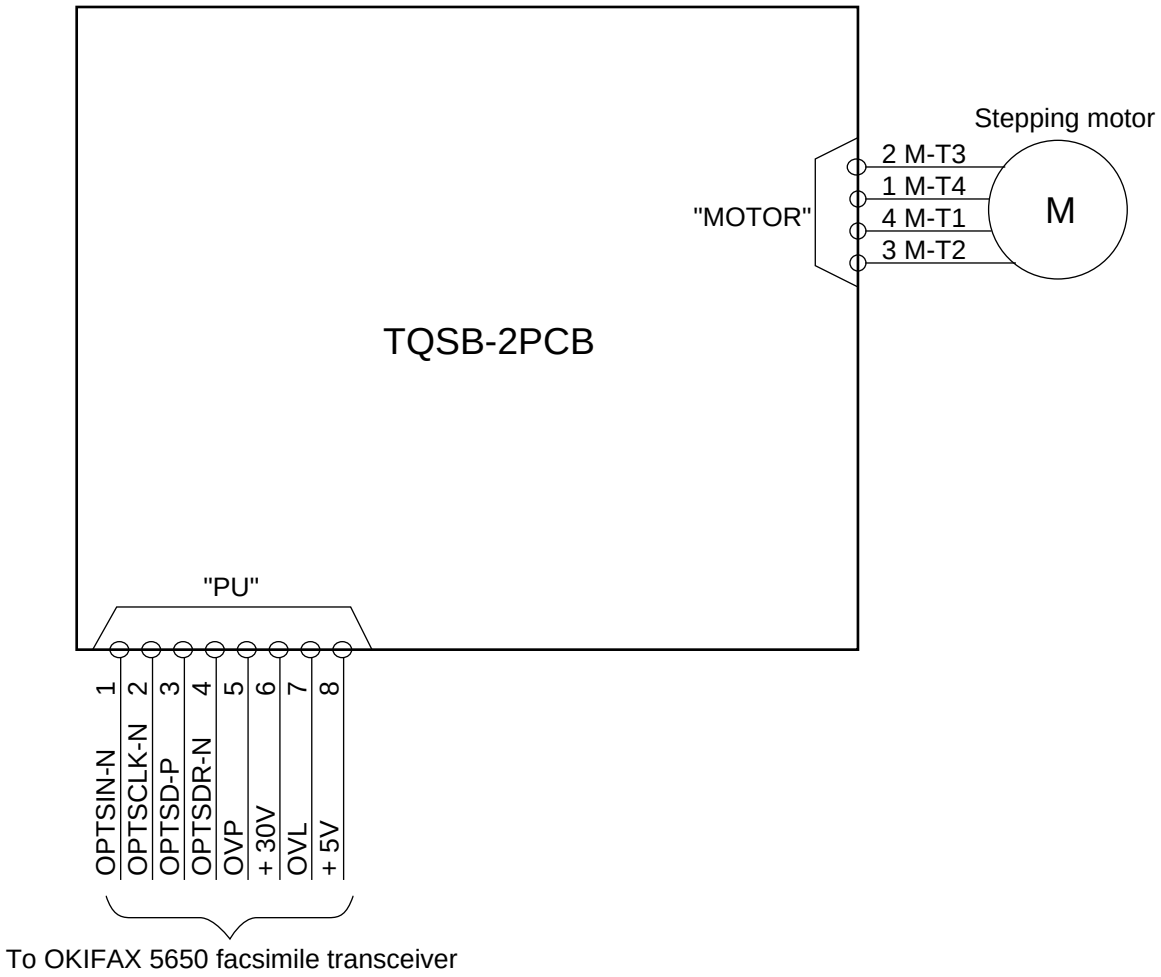

5.2 PCB Layout

TQSB-2PCB

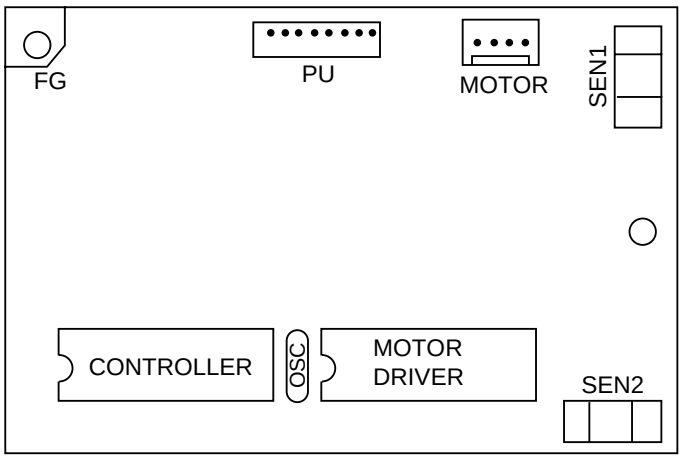

6. PARTS LIST

SECTION1 CABINET & CASSETTE ASSEMBLY

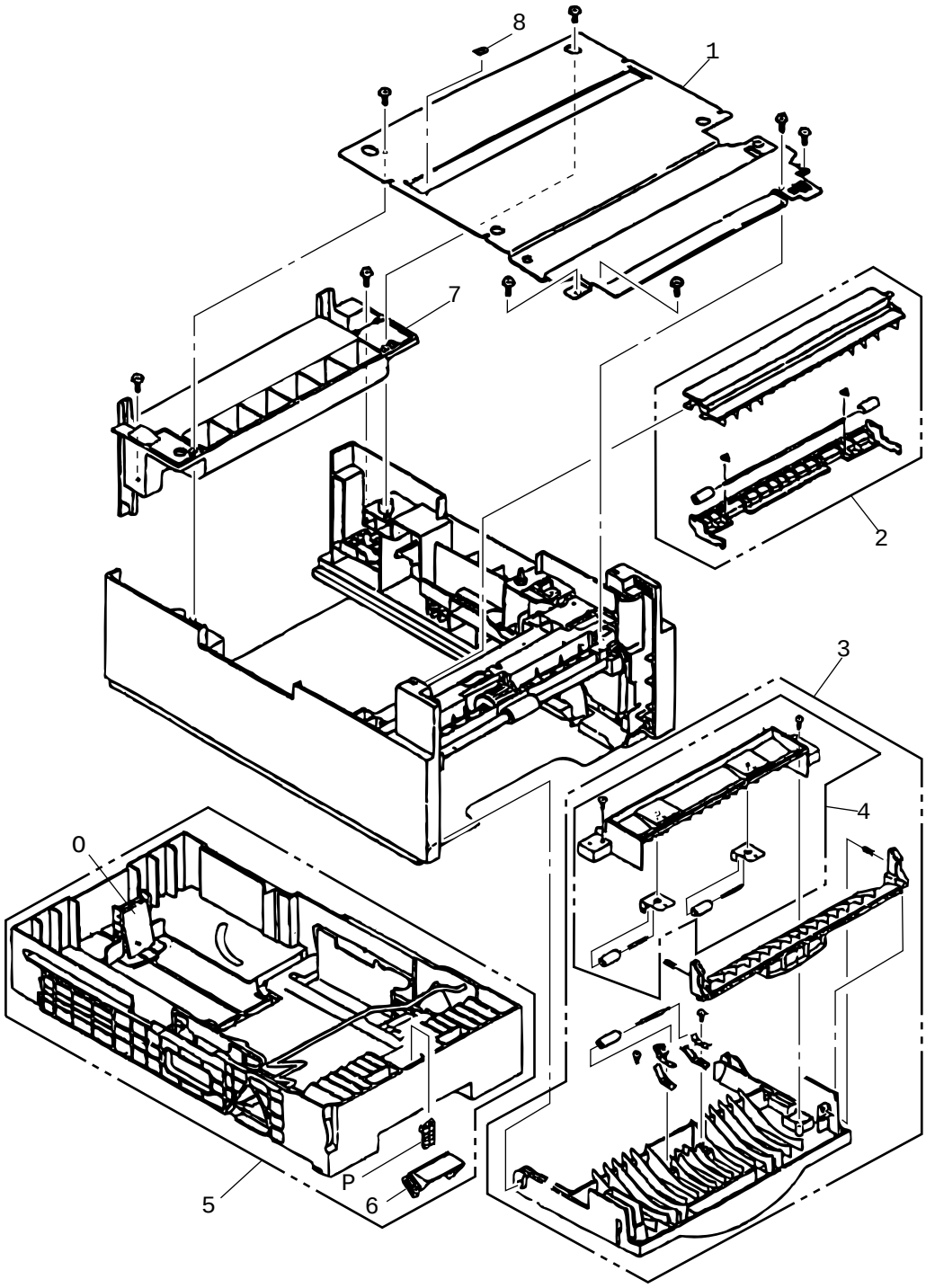

Figure 6.1

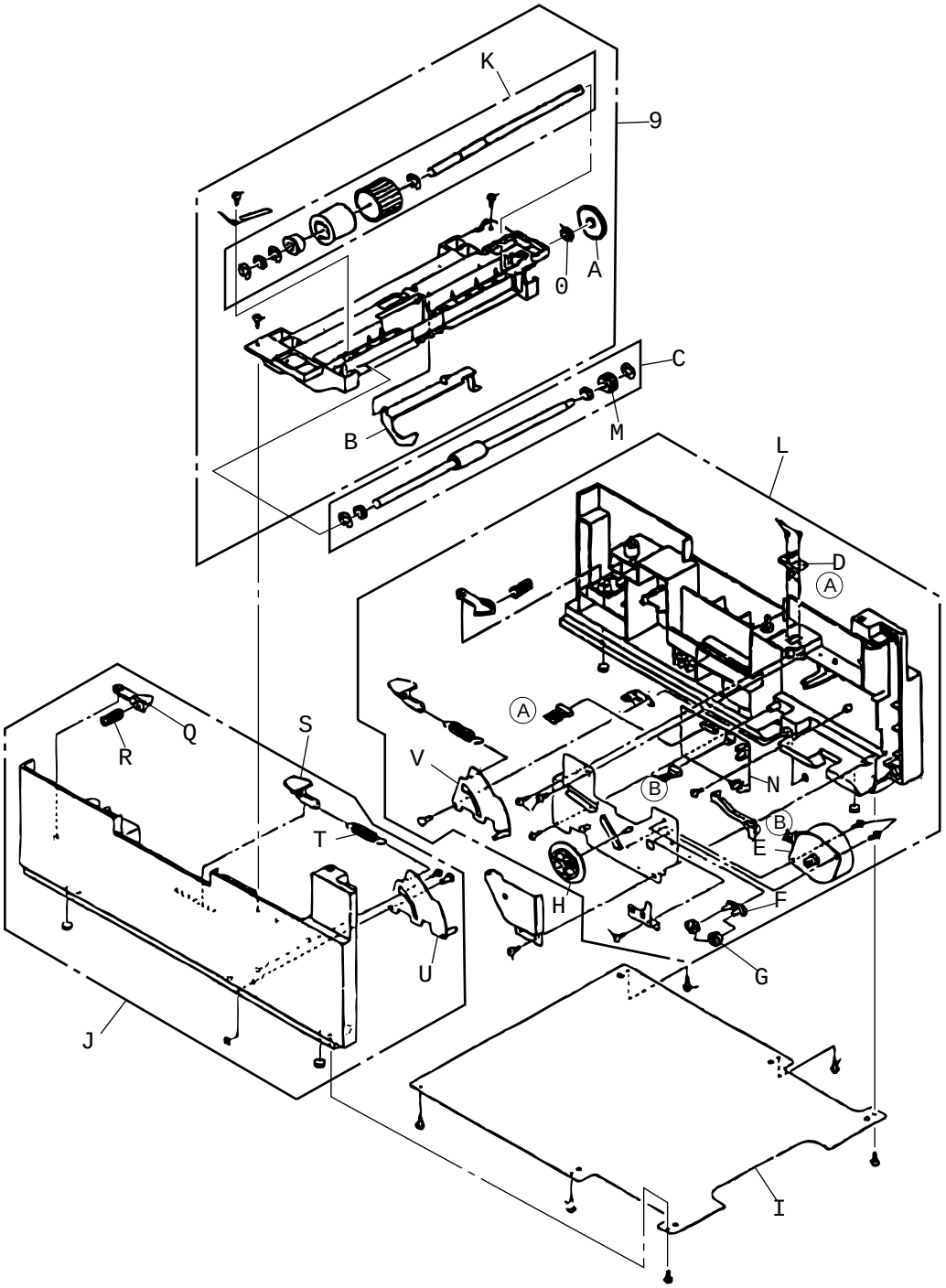

Figure 6.2

Table 6.1 Paper Feeder

No.	OKI Oarts Number	Description	Q'ty/U	Remarks
1	51023301	Upper Plate	1	
2	50222001	Sheet Guide Assembly	1	
3	53075301	Front Cover Assembly	1	
4	50221501	Inner Guide Assembly	1	
5	50107304	Cassette Assembly (2nd Tray)	1	
6	50222101	Separation Frame Assembly (F)	1	
7	53075201	Rear Cover	1	
8	51023401	Ground: Stick Finger	1	
9	50222401	Hopping Frame Assembly	1	
10	51608901	Bushing	1	
11	51239001	Gear (Z70)	1	
12	50411201	Sensor Lever	1	
13	50222501	Feed Roller Assembly	1	
14	56633901	Cable & Connector	1	
15	56512201	Stepping Motor	1	
16	51712001	Bracket	1	
17	51238901	Gear (Z24)	2	
18	51239101	Gear (Z87/Z60)	1	
19	51023201	Bottom Plate	1	
20	50222301	Second Cassette Guide Assembly (L)	1	
21	50409501	Hopping Roller Assembly	1	
22	50222201	Second Cassette Guide Assembly (R)	1	
23	51401101	One-way Clutch Gear	1	
24	55078102	PCB: TQSB-2	1	
25	51114801	Tail Guide Assembly	1	
26	50927502	Separation Spring	1	
27		Cassette Lock Lever	1	Part of Item No.20
28		Locks Spring	1	Part of Item No.20
29	51500301	Pull Block	1	
30		Sheet Spring	1	Part of Item No.20
31		Sheet Link (L)	1	Part of Item No.20
32		Sheet Link (R)	1	Part of Item No.22