KONICA MINOLTA

SERVICE MANUAL

FIELD SERVICE

bizhub C353P

2007.11

KONICA MINOLTA BUSINESS TECHNOLOGIES, INC. Ver. 2.0

FIELD SERVICE TOTAL CONTENTS

SAFETY AND IMPORTANT WARNING ITEMS S-1
- IMPORTANT NOTICE S-1
- DESCRIPTION ITEMS FOR DANGER, WARNING AND CAUTION S-1
- SAFETY WARNINGS S-2
- WARNING INDICATIONS ON THE MACHINE S-18

MEASURES TO TAKE IN CASE OF AN ACCIDENT S-20

Composition of the service manual C-1

Notation of the service manual C-2

bizhub C353P Main body

- General 1
- Maintenance 11
- Adjustment/Setting 159
- Troubleshooting 395
- Appendix 499

Standard controller

- General 1
- Maintenance 3
- Troubleshooting 33

PC-104/204

- General 1
- Maintenance 3
- Adjustment/Setting 17
- Troubleshooting 25

PC-405

- General 1
- Maintenance 3
- Adjustment/Setting 21
- Troubleshooting 33

FS-519/PK-515/OT-602

- General 1
- Maintenance 9
- Adjustment/Setting 61
- Troubleshooting 75

MT-502

General 1
Maintenance 3
Adjustment/Setting 7
Troubleshooting 11

SD-505

General 1
Maintenance 3
Adjustment/Setting 25
Troubleshooting 39

FS-609/PK-501

General 1
Maintenance 5
Adjustment/Setting 33
Troubleshooting 63

SAFETY AND IMPORTANT WARNING ITEMS

Read carefully the safety and important warning items described below to understand them before doing service work.

IMPORTANT NOTICE

Because of possible hazards to an inexperienced person servicing this product as well as the risk of damage to the product, KONICA MINOLTA BUSINESS TECHNOLOGIES, INC. (hereafter called the KMBT) strongly recommends that all servicing be performed only by KMBT-trained service technicians.
Changes may have been made to this product to improve its performance after this Service Manual was printed. Accordingly, KMBT does not warrant, either explicitly or implicitly, that the information contained in this service manual is complete and accurate.
The user of this service manual must assume all risks of personal injury and/or damage to the product while servicing the product for which this service manual is intended.
Therefore, this service manual must be carefully read before doing service work both in the course of technical training and even after that, for performing maintenance and control of the product properly.
Keep this service manual also for future service.

DESCRIPTION ITEMS FOR DANGER, WARNING AND CAUTION

In this Service Manual, each of three expressions "⚠ DANGER", "⚠ WARNING", and "⚠ CAUTION" is defined as follows together with a symbol mark to be used in a limited meaning.
When servicing the product, the relevant works (disassembling, reassembling, adjustment, repair, maintenance, etc.) need to be conducted with utmost care.

⚠ **DANGER: Action having a high possibility of suffering death or serious injury**

⚠ **WARNING: Action having a possibility of suffering death or serious injury**

⚠ **CAUTION: Action having a possibility of suffering a slight wound, medium trouble, and property damage**

Symbols used for safety and important warning items are defined as follows:

△ :Precaution when servicing the product.

⃠ :Prohibition when servicing the product.

● :Direction when servicing the product.

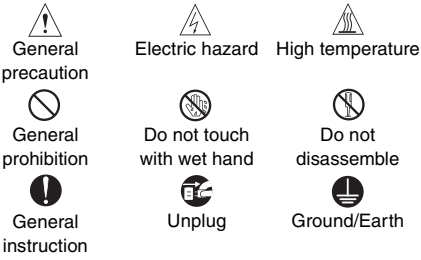

SAFETY WARNINGS

[1] MODIFICATIONS NOT AUTHORIZED BY KONICA MINOLTA BUSINESS TECHNOLOGIES, INC.

KONICA MINOLTA brand products are renowned for their high reliability. This reliability is achieved through high-quality design and a solid service network.
Product design is a highly complicated and delicate process where numerous mechanical, physical, and electrical aspects have to be taken into consideration, with the aim of arriving at proper tolerances and safety factors. For this reason, unauthorized modifications involve a high risk of degradation in performance and safety. Such modifications are therefore strictly prohibited. the points listed below are not exhaustive, but they illustrate the reasoning behind this policy.

Prohibited Actions

⚠ DANGER

- Using any cables or power cord not specified by KMBT.

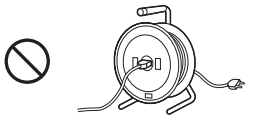

- Using any fuse or thermostat not specified by KMBT. Safety will not be assured, leading to a risk of fire and injury.

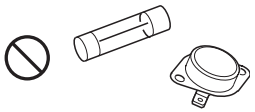

- Disabling fuse functions or bridging fuse terminals with wire, metal clips, solder or similar object.

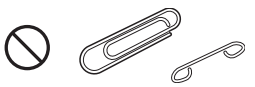

- Disabling relay functions (such as wedging paper between relay contacts)

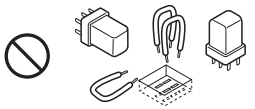

- Disabling safety functions (interlocks, safety circuits, etc.) Safety will not be assured, leading to a risk of fire and injury.

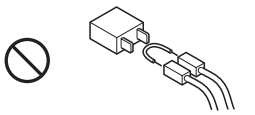

- Making any modification to the product unless instructed by KMBT

- Using parts not specified by KMBT

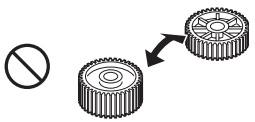

[2] POWER PLUG SELECTION

In some countries or areas, the power plug provided with the product may not fit wall outlet used in the area. In that case, it is obligation of customer engineer (hereafter called the CE) to attach appropriate power plug or power cord set in order to connect the product to the supply.

Power Cord Set or Power Plug

⚠WARNING

- Use power supply cord set which meets the following criteria:
  - provided with a plug having configuration intended for the connection to wall outlet appropriate for the product's rated voltage and current, and
  - the plug has pin/terminal(s) for grounding, and
  - provided with three-conductor cable having enough current capacity, and
  - the cord set meets regulatory requirements for the area.

  Use of inadequate cord set leads to fire or electric shock.

- Attach power plug which meets the following criteria:
  - having configuration intended for the connection to wall outlet appropriate for the product's rated voltage and current, and
  - the plug has pin/terminal(s) for grounding, and
  - meets regulatory requirements for the area.

  Use of inadequate cord set leads to the product connecting to inadequate power supply (voltage, current capacity, grounding), and may result in fire or electric shock.

- Conductors in the power cable must be connected to terminals of the plug according to the following order:
  - •Black or Brown:L (line)
  - •White or Light Blue:N (neutral)
  - •Green/Yellow:PE (earth)

  Wrong connection may cancel safeguards within the product, and results in fire or electric shock.

[3] CHECKPOINTS WHEN PERFORMING ON-SITE SERVICE

KONICA MINOLTA brand products are extensively tested before shipping, to ensure that all applicable safety standards are met, in order to protect the customer and customer engineer (hereafter called the CE) from the risk of injury. However, in daily use, any electrical equipment may be subject to parts wear and eventual failure. In order to maintain safety and reliability, the CE must perform regular safety checks.

1. Power Supply

Connection to Power Supply

⚠ WARNING

- Check that mains voltage is as specified.

  Connection to wrong voltage supply may result in fire or electric shock.

- Connect power plug directly into wall outlet having same configuration as the plug.

  Use of an adapter leads to the product connecting to inadequate power supply (voltage, current capacity, grounding), and may result in fire or electric shock.

  If proper wall outlet is not available, advice the customer to contact qualified electrician for the installation.

- Plug the power cord into the dedicated wall outlet with a capacity greater than the maximum power consumption.

  If excessive current flows in the wall outlet, fire may result.

- If two or more power cords can be plugged into the wall outlet, the total load must not exceed the rating of the wall outlet.

  If excessive current flows in the wall outlet, fire may result.

- Make sure the power cord is plugged in the wall outlet securely.

  Contact problems may lead to increased resistance, overheating, and the risk of fire.

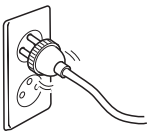

- Check whether the product is grounded properly.

  If current leakage occurs in an ungrounded product, you may suffer electric shock while operating the product.

  Connect power plug to grounded wall outlet.

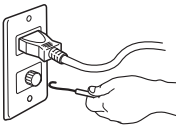

Power Plug and Cord

⚠ WARNING

- When using the power cord set (inlet type) that came with this product, make sure the connector is securely inserted in the inlet of the product.
  When securing measure is provided, secure the cord with the fixture properly.
  If the power cord (inlet type) is not connected to the product securely, a contact problem may lead to increased resistance, overheating, and risk of fire.

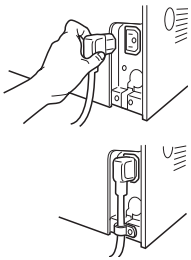

- Check whether the power cord is not stepped on or pinched by a table and so on.
  Overheating may occur there, leading to a risk of fire.

- Check whether the power cord is damaged. Check whether the sheath is damaged.
  If the power plug, cord, or sheath is damaged, replace with a new power cord (with plug and connector on each end) specified by KMBT. Using the damaged power cord may result in fire or electric shock.

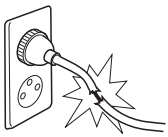

- Do not bundle or tie the power cord.
  Overheating may occur there, leading to a risk of fire.

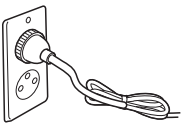

- Check whether dust is collected around the power plug and wall outlet.
  Using the power plug and wall outlet without removing dust may result in fire.

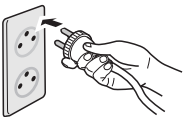

- Do not insert the power plug into the wall outlet with a wet hand.
  The risk of electric shock exists.

- When unplugging the power cord, grasp the plug, not the cable.
  The cable may be broken, leading to a risk of fire and electric shock.

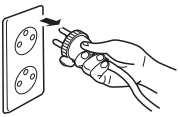

Wiring

⚠ WARNING

- Never use multi-plug adapters to plug multiple power cords in the same outlet.

  If used, the risk of fire exists.

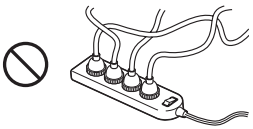

- When an extension cord is required, use a specified one. Current that can flow in the extension cord is limited, so using a too long extension cord may result in fire.

  Do not use an extension cable reel with the cable taken up. Fire may result.

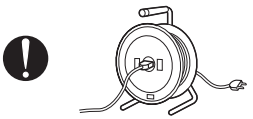

2. Installation Requirements

Prohibited Installation Places

⚠ WARNING

- Do not place the product near flammable materials or volatile materials that may catch fire.

  A risk of fire exists.

- Do not place the product in a place exposed to water such as rain.

  A risk of fire and electric shock exists.

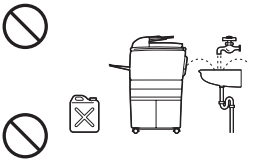

When not Using the Product for a long time

⚠ WARNING

- When the product is not used over an extended period of time (holidays, etc.), switch it off and unplug the power cord.

  Dust collected around the power plug and outlet may cause fire.

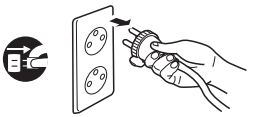

Ventilation

⚠ CAUTION

- The product generates ozone gas during operation, but it will not be harmful to the human body.

  If a bad smell of ozone is present in the following cases, ventilate the room.

  a. When the product is used in a poorly ventilated room
  b. When taking a lot of copies
  c. When using multiple products at the same time

Stability

⚠ CAUTION

- Be sure to lock the caster stoppers.

  In the case of an earthquake and so on, the product may slide, leading to a injury.

Inspection before Servicing

⚠ CAUTION

- Before conducting an inspection, read all relevant documentation (service manual, technical notices, etc.) and proceed with the inspection following the prescribed procedure in safety clothes, using only the prescribed tools. Do not make any adjustment not described in the documentation.

  If the prescribed procedure or tool is not used, the product may break and a risk of injury or fire exists.

- Before conducting an inspection, be sure to disconnect the power plugs from the product and options.

  When the power plug is inserted in the wall outlet, some units are still powered even if the POWER switch is turned OFF. A risk of electric shock exists.

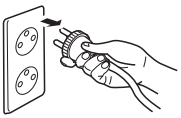

- The area around the fixing unit is hot.

  You may get burnt.

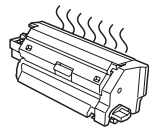

Work Performed with the Product Powered On

⚠ WARNING

- Take every care when making adjustments or performing an operation check with the product powered.

  If you make adjustments or perform an operation check with the external cover detached, you may touch live or high-voltage parts or you may be caught in moving gears or the timing belt, leading to a risk of injury.

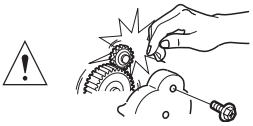

- Take every care when servicing with the external cover detached.

  High-voltage exists around the drum unit. A risk of electric shock exists.

Safety Checkpoints

⚠ WARNING

- Check the exterior and frame for edges, burrs, and other damage.

  The user or CE may be injured.

- Do not allow any metal parts such as clips, staples, and screws to fall into the product.

  They can short internal circuits and cause electric shock or fire.

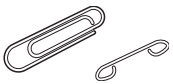

- Check wiring for squeezing and any other damage.

  Current can leak, leading to a risk of electric shock or fire.

- Carefully remove all toner remnants and dust from electrical parts and electrode units such as a charging corona unit.

  Current can leak, leading to a risk of product trouble or fire.

- Check high-voltage cables and sheaths for any damage.

  Current can leak, leading to a risk of electric shock or fire.

Safety Checkpoints

⚠ WARNING

- Check electrode units such as a charging corona unit for deterioration and sign of leakage.

  Current can leak, leading to a risk of trouble or fire.

- Before disassembling or adjusting the write unit (P/H unit) incorporating a laser, make sure that the power cord has been disconnected.

  The laser light can enter your eye, leading to a risk of loss of eyesight.

- Do not remove the cover of the write unit. Do not supply power with the write unit shifted from the specified mounting position.

  The laser light can enter your eye, leading to a risk of loss of eyesight.

- When replacing a lithium battery, replace it with a new lithium battery specified in the Parts Guide Manual. Dispose of the used lithium battery using the method specified by local authority.

  Improper replacement can cause explosion.

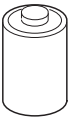

- After replacing a part to which AC voltage is applied (e.g., optical lamp and fixing lamp), be sure to check the installation state.

  A risk of fire exists.

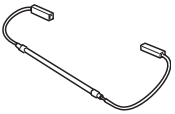

- Check the interlock switch and actuator for loosening and check whether the interlock functions properly.

  If the interlock does not function, you may receive an electric shock or be injured when you insert your hand in the product (e.g., for clearing paper jam).

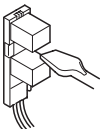

- Make sure the wiring cannot come into contact with sharp edges, burrs, or other pointed parts.

  Current can leak, leading to a risk of electric shock or fire.

Safety Checkpoints

⚠ WARNING

- Make sure that all screws, components, wiring, connectors, etc. that were removed for safety check and maintenance have been reinstalled in the original location. (Pay special attention to forgotten connectors, pinched cables, forgotten screws, etc.)

  A risk of product trouble, electric shock, and fire exists.

Handling of Consumables

⚠ WARNING

- Toner and developer are not harmful substances, but care must be taken not to breathe excessive amounts or let the substances come into contact with eyes, etc. It may be stimulative.

  If the substances get in the eye, rinse with plenty of water immediately. When symptoms are noticeable, consult a physician.

- Never throw the used cartridge and toner into fire.

  You may be burned due to dust explosion.

Handling of Service Materials

⚠ CAUTION

- Unplug the power cord from the wall outlet.

  Drum cleaner (isopropyl alcohol) and roller cleaner (acetone-based) are highly flammable and must be handled with care. A risk of fire exists.

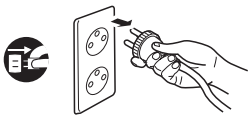

- Do not replace the cover or turn the product ON before any solvent remnants on the cleaned parts have fully evaporated.

  A risk of fire exists.

Handling of Service Materials

⚠ CAUTION

- Use only a small amount of cleaner at a time and take care not to spill any liquid. If this happens, immediately wipe it off.
  A risk of fire exists.

- When using any solvent, ventilate the room well.
  Breathing large quantities of organic solvents can lead to discomfort.

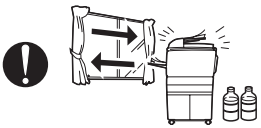

[4] Used Batteries Precautions

ALL Areas

CAUTION

Danger of explosion if battery is incorrectly replaced.
Replace only with the same or equivalent type recommended by the manufacturer.
Dispose of used batteries according to the manufacturer's instructions.

Germany

VORSICHT!

Explosionsgefahr bei unsachgemäßem Austausch der Batterie.
Ersatz nur durch denselben oder einen vom Hersteller empfohlenen gleichwertigen Typ.
Entsorgung gebrauchter Batterien nach Angaben des Herstellers.

France

ATTENTION

Il y a danger d'explosion s'il y a remplacement incorrect de la batterie.
Remplacer uniquement avec une batterie du même type ou d'un type équivalent recommandé par le constructeur.
Mettre au rebut les batteries usagées conformément aux instructions du fabricant.

Denmark

ADVARSEL!

Lithiumbatteri - Eksplosionsfare ved fejlagtig håndtering.
Udskiftning må kun ske med batteri af samme fabrikat og type.
Levér det brugte batteri tilbage til leverandøren.

Finland, Sweden

VAROITUS

Paristo voi räjähtää, jos se on virheellisesti asennettu.
Vaihda paristo ainoastaan laitevalmistajan suosittelemaan tyyppiin.
Hävitä käytetty paristo valmistajan ohjeiden mukaisesti.

VARNING

Explosionsfara vid felaktigt batteribyte.
Använd samma batterityp eller en ekvivalent typ som rekommenderas av apparattillverkaren.
Kassera använt batteri enligt fabrikantens instruktion.

Norway

ADVARSEL

Eksplosjonsfare ved feilaktig skifte av batteri.
Benytt samme batteritype eller en tilsvarende type anbefalt av apparatfabrikanten.
Brukte batterier kasseres i henhold til fabrikantens instruksjoner.

[5] Laser Safety

- This is a digital machine certified as a Class 1 laser product. There is no possibility of danger from a laser, provided the machine is serviced according to the instruction in this manual.

5.1 Internal Laser Radiation

semiconductor laser	
Maximum power of the laser diode	30 mW
Maximum average radiation power (*)	11.6 µW
Wavelength	775-800 nm

*at laser aperture of the print head unit

- This product employs a Class 3B laser diode that emits an invisible laser beam. The laser diode and the scanning polygon mirror are incorporated in the print head unit.
- The print head unit is NOT A FIELD SERVICEABLE ITEM. Therefore, the print head unit should not be opened under any circumstances.

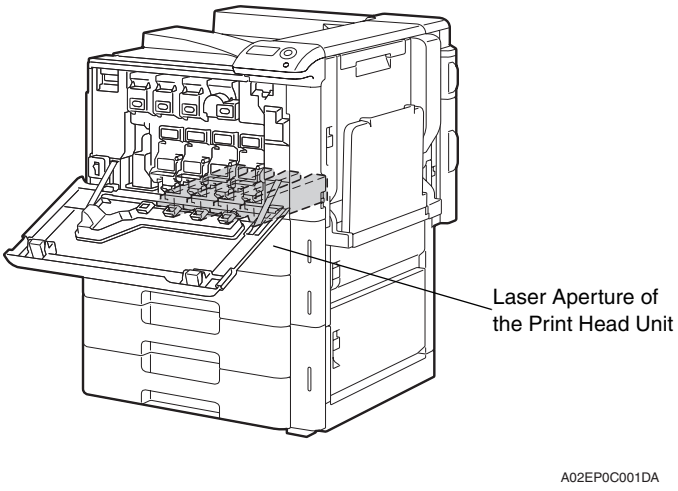

U.S.A., Canada
(CDRH Regulation)

- This machine is certified as a Class 1 Laser product under Radiation Performance Standard according to the Food, Drug and Cosmetic Act of 1990. Compliance is mandatory for Laser products marketed in the United States and is reported to the Center for Devices and Radiological Health (CDRH) of the U.S. Food and Drug Administration of the U.S. Department of Health and Human Services (DHHS). This means that the device does not produce hazardous laser radiation.

- The label shown on page S-16 indicates compliance with the CDRH regulations and must be attached to laser products marketed in the United States.

CAUTION
- **Use of controls, adjustments or performance of procedures other than those specified in this manual may result in hazardous radiation exposure.**

semiconductor laser	
Maximum power of the laser diode	30 mW
Wavelength	775-800 nm

All Areas

CAUTION
- **Use of controls, adjustments or performance of procedures other than those specified in this manual may result in hazardous radiation exposure.**

semiconductor laser	
Maximum power of the laser diode	30 mW
Wavelength	775-800 nm

Denmark

ADVARSEL
- **Usynlig laserstråling ved åbning, når sikkerhedsafbrydere er ude af funktion. Undgå udsættelse for stråling. Klasse 1 laser produkt der opfylder IEC60825-1 sikkerheds kravene.**

halvlederlaser	
Laserdiodens højeste styrke	30 mW
bølgelængden	775-800 nm

Finland, Sweden

LUOKAN 1 LASERLAITE
KLASS 1 LASER APPARAT

VAROITUS!
- **Laitteen käyttäminen muulla kuin tässä käyttöohjeessa mainitulla tavalla saattaa altistaa käyttäjän turvallisuusluokan 1 ylittävälle näkymättömälle lasersäteilylle.**

puolijohdelaser	
Laserdiodin suurin teho	30 mW
aallonpituus	775-800 nm

VARNING!
- **Om apparaten används på annat sätt än i denna bruksanvisning specificerats, kan användaren utsättas för osynlig laserstrålning, som överskrider gränsen för laserklass 1.**

halvledarlaser	
Den maximala effekten för laserdioden	30 mW
våglängden	775-800 nm

VARO!
- **Avattaessa ja suojalukitus ohitettaessa olet alttiina näkymättomälle lasersäteilylle. Älä katso säteeseen.**

VARNING!
- **Osynlig laserstråining när denna del är öppnad och spärren är urkopplad. Betrakta ej stråien.**

Norway

ADVERSEL
- **Dersom apparatet brukes på annen måte enn spesifisert i denne bruksanvisning, kan brukeren utsettes för unsynlig laserstrålning, som overskrider grensen for laser klass 1.**

halvleder laser	
Maksimal effekt till laserdiode	30 mW
bølgelengde	775-800 nm

5.2 Laser Safety Label

- A laser safety label is attached to the inside of the machine as shown below.

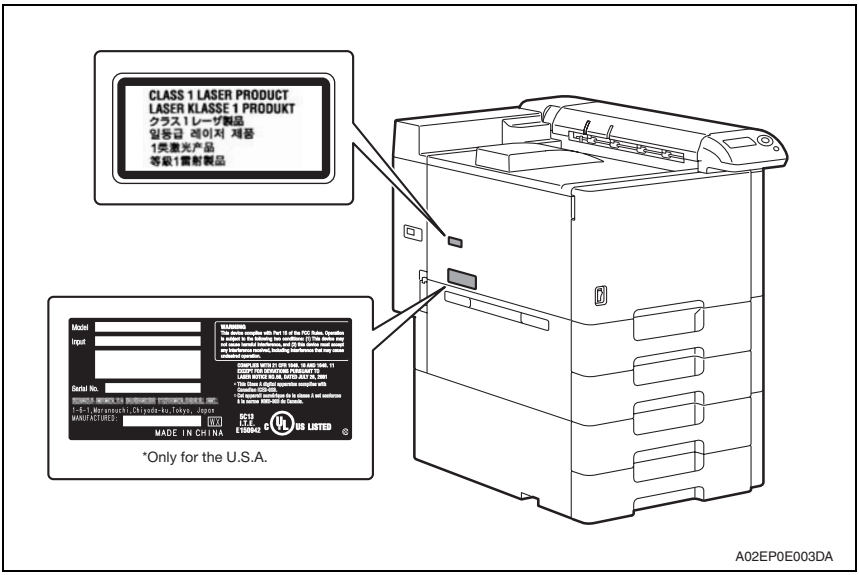

5.3 Laser Caution Label

- A laser caution label is attached to the outside of the machine as shown below.

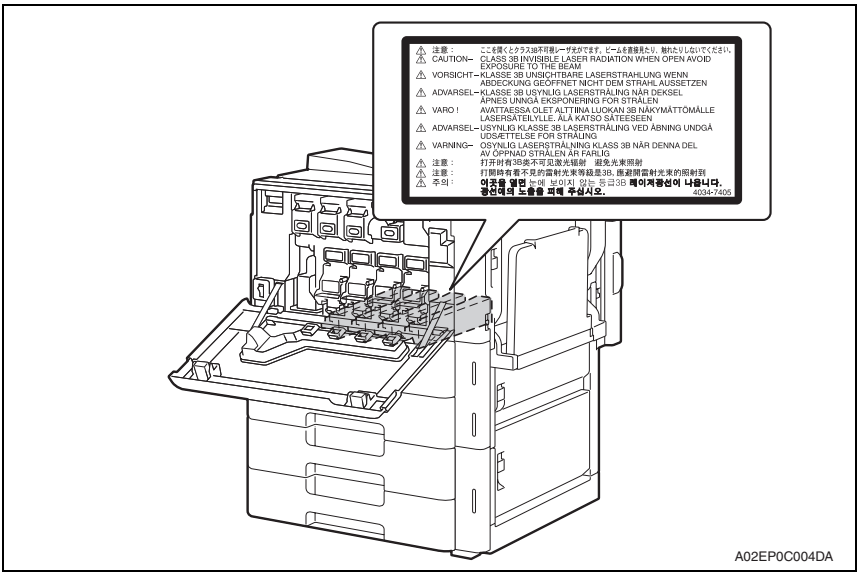

5.4 PRECAUTIONS FOR HANDLING THE LASER EQUIPMENT

- When laser protective goggles are to be used, select ones with a lens conforming to the above specifications.
- When a disassembly job needs to be performed in the laser beam path, such as when working around the printerhead and PC drum, be sure first to turn the printer OFF.
- If the job requires that the printer be left ON, take off your watch and ring and wear laser protective goggles.
- A highly reflective tool can be dangerous if it is brought into the laser beam path. Use utmost care when handling tools on the user's premises.
- The Print head is not to be disassembled or adjusted in the field. Replace the unit or Assembly including the control board. Therefore, remove the laser diode, and do not perform control board trimmer adjustment.

WARNING INDICATIONS ON THE MACHINE

Caution labels shown are attached in some areas on/in the machine.
When accessing these areas for maintenance, repair, or adjustment, special care should be taken to avoid burns and electric shock.

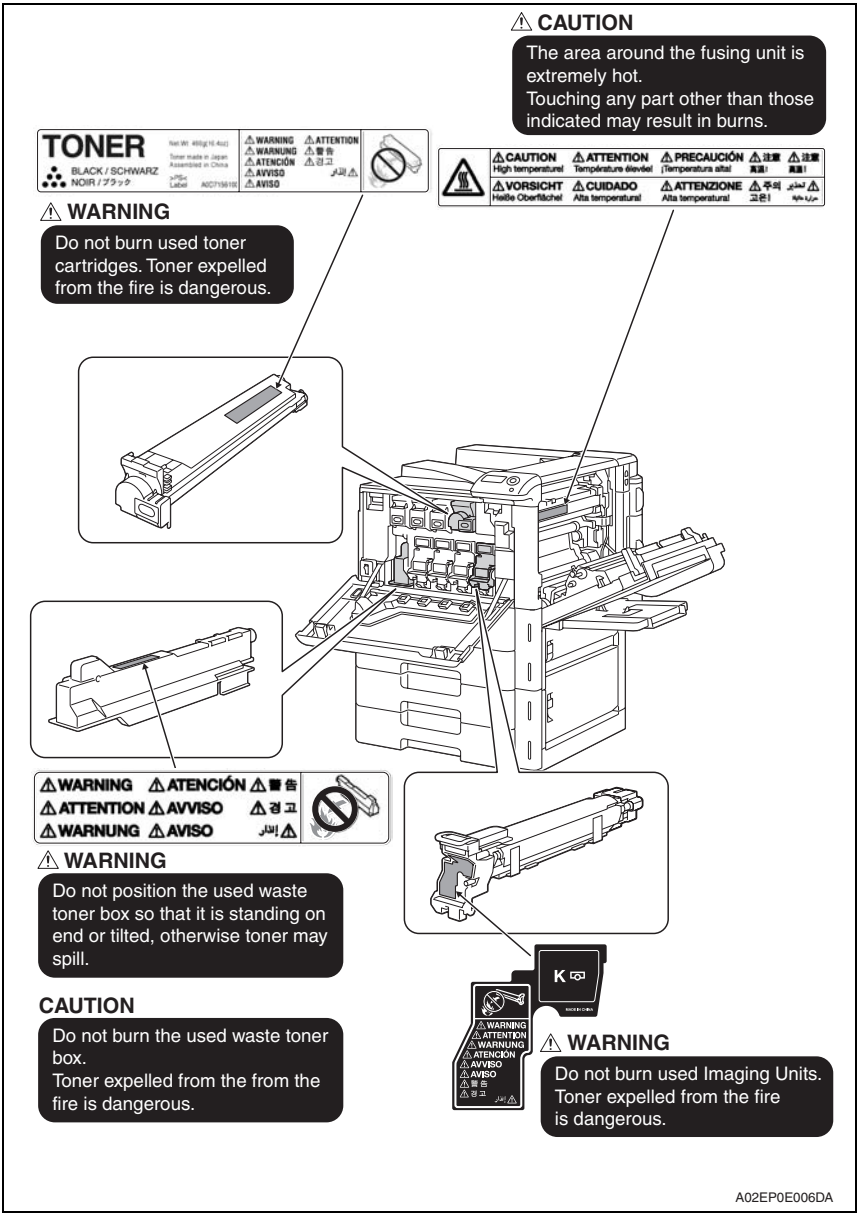

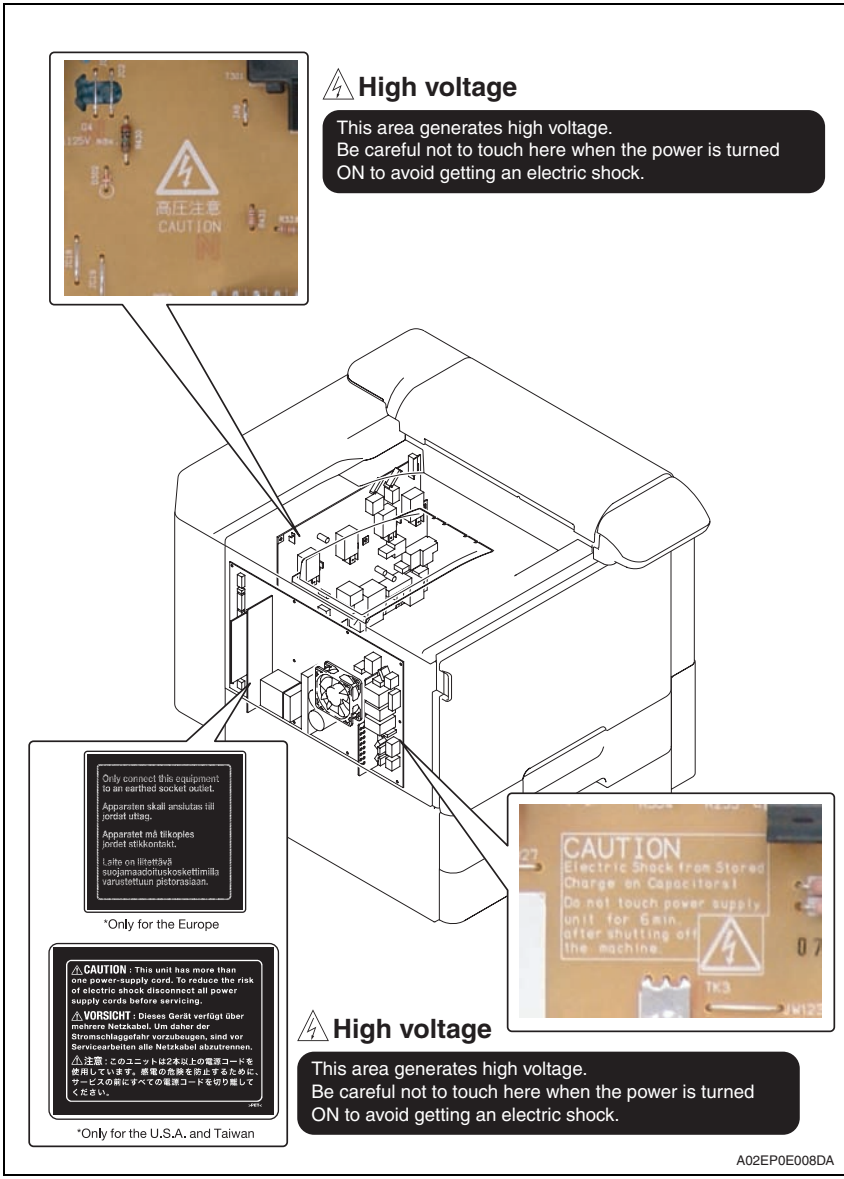

⚠ CAUTION:

- **You may be burned or injured if you touch any area that you are advised not to touch by any caution label. Do not remove caution labels. If any caution label has come off or soiled and therefore the caution cannot be read, contact our service office.**

MEASURES TO TAKE IN CASE OF AN ACCIDENT

1. If an accident has occurred, the distributor who has been notified first must immediately take emergency measures to provide relief to affected persons and to prevent further damage.
2. If a report of a serious accident has been received from a customer, an on-site evaluation must be carried out quickly and KMBT must be notified.
3. To determine the cause of the accident, conditions and materials must be recorded through direct on-site checks, in accordance with instructions issued by KMBT.
4. For reports and measures concerning serious accidents, follow the regulations specified by every distributor.

Composition of the service manual

This service manual covers the Field Service section for the main machine and its options.

Since the Theory of Operation section is same as that of C353, refer to the Theory of Operation section of C353 service manual.

Field Service section gives, as information required by the CE at the site (or at the customer's premise), a rough outline of the service schedule and its details, maintenance steps, the object and role of each adjustment, error codes and supplementary information.

The basic configuration of each section is as follows. However some options may not be applied to the following configuration.

<Field service section>

GENERAL:	Explanation of system configuration, and product specifications
MAINTENANCE:	Explanation of service schedule, maintenance steps, service tools, service jig, removal/reinstallation methods of major parts, and firmware version up method etc.
ADJUSTMENT/SETTING:	Explanation of utility mode, service mode, and mechanical adjustment etc.
TROUBLESHOOTING:	Explanation of lists of jam codes and error codes, and their countermeasures etc.
APPENDIX:	Parts layout drawings, connector layout drawings, timing chart, overall layout drawing are attached.

Notation of the service manual

A. Product name

In this manual, each of the products is described as follows:

(1)	bizhub C353P	Main body
(2)	Microsoft Windows 98:	Windows 98
	Microsoft Windows Me:	Windows Me
	Microsoft Windows NT 4.0:	Windows NT 4.0 or Windows NT
	Microsoft Windows 2000:	Windows 2000
	Microsoft Windows XP:	Windows XP
	Microsoft Windows Vista:	Windows Vista
	When the description is made in combination of the OS's mentioned above:	
		Windows 98/Me
		Windows NT 4.0/2000
		Windows NT/2000/XP/Vista
		Windows 98/Me/ NT/2000/XP/Vista

B. Brand name

The company names and product names mentioned in this manual are the brand name or the registered trademark of each company.

C. Feeding direction

- When the long side of the paper is parallel with the feeding direction, it is called short edge feeding. The feeding direction which is perpendicular to the short edge feeding is called the long edge feeding.
- Short edge feeding will be identified with [S (abbreviation for Short edge feeding)] on the paper size. No specific notation is added for the long edge feeding.
  When the size has only the short edge feeding with no long edge feeding, [S] will not be added to the paper size.

<Sample notation>

Paper size	Feeding direction	Notation
A4	Long edge feeding	A4
	Short edge feeding	A4S
A3	Short edge feeding	A3

KONICA MINOLTA

SERVICE MANUAL

FIELD SERVICE

bizhub C353P
Main body

Confidential – for internal use only, do not distribute

2007.11
KONICA MINOLTA BUSINESS TECHNOLOGIES, INC. Ver. 2.0

Revision history

After publication of this service manual, the parts and mechanism may be subject to change for improvement of their performance.
Therefore, the descriptions given in this service manual may not coincide with the actual machine.

When any change has been made to the descriptions in the service manual, a revised version will be issued with a revision mark added as required.

Revision mark:

- To indicate clearly a section revised, show ⚠1 to the left of the revised section.
  A number within ⚠1 represents the number of times the revision has been made.

- To indicate clearly a section revised, show ▲1 in the lower outside section of the corresponding page.
  A number within ▲1 represents the number of times the revision has been made.

NOTE

Revision marks shown in a page are restricted only to the latest ones with the old ones deleted.

- When a page revised in Ver. 2.0 has been changed in Ver. 3.0:
  The revision marks for Ver. 3.0 only are shown with those for Ver. 2.0 deleted.
- When a page revised in Ver. 2.0 has not been changed in Ver. 3.0:
  The revision marks for Ver. 2.0 are left as they are.

Date	Service manual Ver.	Revision mark	Descriptions of revision
2007/11	2.0	⚠1	Description addition of function enhancement 1, error corrections
2007/10	1.0	—	Issue of the first edition

CONTENTS

bizhub C353P Main body

General

1. System configuration 1
2. Product specifications 3
3. Section configuration 8
4. Paper path 8
5. Image creation process 9

Maintenance

6. Periodical check 11
6.1 Service schedule 11
6.1.1 Main body 11
6.1.2 Options 11
6.2 Maintenance items 12
6.2.1 Main body 12
6.2.2 PC-104/204/405 14
6.2.3 FS-519 14
6.2.4 FS-609 14
6.3 Maintenance parts 15
6.3.1 Replacement parts 15
6.3.2 Cleaning parts 16
6.4 Concept of parts life 17
6.4.1 Life value of consumables and parts 17
6.4.2 Conditions for life specifications values 18
6.4.3 Control causing inhibited printing for one part when an inhibited-printing event occurs in another part 18
6.5 Maintenance procedure (periodical check parts) 19
6.5.1 Cleaning of the electrostatic charger wire 19
6.5.2 Cleaning of the timing roller 19
6.5.3 Cleaning of the area around the waste toner collecting port 20
6.5.4 Cleaning of the duplex transport rollers 20
6.5.5 Replacing the paper feed tray 1 feed roller/paper feed tray 1 pick-up roller 21
6.5.6 Replacing the paper feed tray 1 separation roller assy 24
6.5.7 Replacing the paper feed tray 2 feed roller/paper feed tray 2 pick-up roller 25
6.5.8 Replacing the paper feed tray 2 separation roller assy 28

6.5.9 Replacing the manual bypass tray feed roller 29
6.5.10 Replacing the manual bypass tray separation roller assy 31
6.5.11 Replacing the waste toner box 32
6.5.12 Replacing the transfer roller unit 33
6.5.13 Replacing the imaging unit 34
6.5.14 Replacing the ozone filter 38
6.5.15 Replacing the toner cartridge 38
6.5.16 Replacing the transfer belt unit 40
6.5.17 Cleaning of the image transfer entrance guide 42
6.5.18 Cleaning of the IDC/registration sensor/MK,YC 42
6.5.19 Replacing the fusing unit 43
7. Service tool 45
7.1 Service material list 45
7.2 CE tool list 45
7.3 Print materials 46
7.3.1 Imaging unit single parts (IU) 46
7.3.2 Toner cartridge single parts (T/C) 46
7.3.3 Waste toner box 46
7.3.4 Maintenance kit 46
8. Service jig 47
8.1 Construction of the service jig 47
8.2 Connecting the equipment cables 48
8.2.1 Connection between X-Rite and the PC 48
8.2.2 Starting the PC and the printer 49
8.2.3 Service jig disconnection procedures 50
9. Electrical/image adjustment 51
9.1 Calling the Service Mode to screen 51
9.2 List of functions 51
9.2.1 X-Rite Calibration (Gradation Adjust) 52
10. Firmware upgrade 59
10.1 Outline 59
10.2 Preparations for firmware rewriting by Windows Command Prompt 59
10.2.1 Service environment 59
10.2.2 Writing into the compact flash 59
10.3 Preparations for firmware rewriting by Firmware Imaging Toolkit 2006 62
10.3.1 Correspond model 62
10.3.2 Function outline 62
10.3.3 System environment 62

10.3.4 Installation of software 63
10.3.5 Update of software 65
10.3.6 Screen 66
10.3.7 Details of each function 68
10.3.8 How to write firmware data 70
10.4 Firmware rewriting by compact flash 75
10.4.1 Updating method 75
10.4.2 Action when data transfer fails 77
10.5 Updating the firmware with the Internet ISW 78
10.5.1 Outline 78
10.5.2 Service environment 78
10.5.3 Preparations for firmware rewriting 78
10.5.4 Firmware rewriting 82
10.5.5 Error code list for the Internet ISW 85
11. Other 88
11.1 Disassembly/adjustment prohibited items 88
11.2 Disassembly/assembly/cleaning list (other parts) 89
11.2.1 Disassembly/assembly parts list 89
11.2.2 Cleaning parts list 91
11.3 Disassembly/assembly procedure 92
11.3.1 Front door 92
11.3.2 Upper front cover 93
11.3.3 Right front cover/1 94
11.3.4 Right front cover/2 94
11.3.5 Left cover 96
11.3.6 Rear left cover 97
11.3.7 Exit cover 97
11.3.8 Rear right cover/1 98
11.3.9 Rear right cover/2 98
11.3.10 Manual bypass tray front cover, manual bypass tray rear cover 99
11.3.11 Upper rear cover 99
11.3.12 Rear cover/1, Rear cover/2. 100
11.3.13 Lower rear cover/1, lower rear cover/2 100
11.3.14 Vertical transport door 100
11.3.15 Control panel assy 101
11.3.16 Exit tray 101
11.3.17 Paper feed tray 1 102
11.3.18 Paper feed tray 2 102

11.3.19 Front cover ... 103
11.3.20 PH unit ... 105
11.3.21 Manual bypass tray unit ... 110
11.3.22 Main drive unit ... 111
11.3.23 Transport drive unit ... 113
11.3.24 Fusing drive unit ... 116
11.3.25 Hopper drive unit (C/K, Y/M) ... 118
11.3.26 Right door assy ... 119
11.3.27 PH relay board (PHREYB) ... 122
11.3.28 DC power supply (DCPU) ... 124
11.3.29 Printer control board (PRCB) ... 126
11.3.30 MFP board (MFPB) ... 128
11.3.31 PWB box ... 130
11.3.32 High voltage unit (HV) ... 132
11.3.33 Service EEPROM board (SV ERB) ... 133
11.3.34 SODIMM/1, SODIMM/2 ... 135
11.3.35 JMP board (JMPB) ... 135
11.3.36 NVRAM board (NRB) ... 136
11.3.37 Paper feed tray 1 paper FD size detect board (PSDTB/1) ... 136
11.3.38 Paper feed tray 2 paper FD size detect board (PSDTB/2) ... 137
11.3.39 Transport motor (M1) ... 138
11.3.40 Color PC motor (M2) ... 138
11.3.41 Fusing motor (M5) ... 139
11.3.42 Switchback motor (M6) ... 140
11.3.43 Duplex transport motor (M7) ... 141
11.3.44 Fusing retraction motor (M12) ... 142
11.3.45 Paper feed tray 1 lift-up motor (M8) ... 143
11.3.46 Paper feed tray 2 lift-up motor (M9) ... 144
11.3.47 Toner supply motor/CK (M3) ... 146
11.3.48 Toner supply motor/YM (M4) ... 146
11.3.49 Paper feed tray 1 paper feed clutch (CL1) ... 147
11.3.50 Paper feed tray 2 vertical transport clutch (CL3) ... 148
11.3.51 Paper feed tray 2 paper feed clutch (CL2) ... 149
11.3.52 Manual paper feed clutch (CL4) ... 149
11.3.53 Transfer belt retraction clutch (CL7) ... 150
11.3.54 Developing clutch/K (CL5) ... 150
11.3.55 Tim. roller clutch (CL6) ... 151

11.3.56 IDC registration sensor/MK (IDCS/MK), IDC registration sensor/YC (IDCS/YC)152
11.4 Cleaning procedure 154
11.4.1 Transfer belt unit 154
11.4.2 PH window Y,M,C,K 154
11.4.3 Paper feed tray 1 feed roller, paper feed tray 1 pick-up roller, paper feed tray 1 separation roller 155
11.4.4 Paper feed tray 2 feed roller, paper feed tray 2 pick-up roller, paper feed tray 1 separation roller 156
11.4.5 Paper feed tray 2 transport roller 157
11.4.6 Manual bypass tray feed roller 157
11.4.7 Manual bypass tray separation roller 157

Adjustment/Setting

12. How to use the adjustment section 159
13. Utility Mode 160
13.1 Control Panel 160
13.2 Utility Mode function tree 161
13.3 Utility Mode function setting procedure 168
13.3.1 Procedure 168
13.3.2 Cancelling the settings 168
13.3.3 Changing the settings on the setting menu 168
13.4 Meter Count 169
13.5 Settings in job operation 169
13.6 Settings in Paper Tray 171
13.7 User setting function setting procedure 173
13.7.1 Print Reports 173
13.7.2 Consumables 176
13.7.3 System Settings 176
13.7.4 Printer Settings 179
13.8 System settings function setting procedure 185
13.8.1 System Settings 185
13.8.2 Network Settings 186
13.8.3 Printer Settings 205
13.8.4 System Connection 205
13.9 Admin. Settings 207
13.9.1 Security Settings 207
13.9.2 User Box Settings 215
13.9.3 Auth Device Setting 216

13.9.4 Expert Adjustment 217
13.10 Banner Printing 225
14. Adjustment item list 226
15. Service Mode 228
15.1 Service Mode function setting procedure 228
15.1.1 Procedure 228
15.2 Service Mode function tree 230
15.3 System Settings 235
15.3.1 Destination 235
15.3.2 Enter Serial No. 235
15.3.3 Initialize 236
15.3.4 Foolscap Size 236
15.3.5 Don't go to Sleep 236
15.3.6 Image Controller 237
15.3.7 Unit Replacement 237
15.3.8 LCT Size Setting 238
15.3.9 Data Capture 238
15.3.10 Software SW Setting 240
15.3.11 Enter Setup Date 241
15.3.12 Comm. System 241
15.3.13 Option Setting 242
15.3.14 Maintenance Ctr 242
15.3.15 IU Yield Setting 243
15.3.16 Change Warmup Time 243
15.3.17 Status LED Setting 244
15.3.18 Toner Near Empty 244
15.3.19 Auth. Device Setting 245
15.3.20 Inferior Cut 245
15.4 Clear Counter 246
15.4.1 Yield Counter 246
15.4.2 JAM 246
15.4.3 Counter Service Called 246
15.4.4 Warning 246
15.4.5 Counter for Mode 246
15.4.6 Time Series Ser Call 247
15.4.7 Time series JAM 247
15.5 List Output 248
15.5.1 Management List 248

15.5.2 Adjustment List 248
15.6 Machine Status 249
15.7 Test Mode 250
15.7.1 Procedure for test pattern output 250
15.7.2 Running Mode 250
15.7.3 Gradation Pattern 250
15.7.4 Halftone Pattern 251
15.8 Machine Adjustment 252
15.8.1 Fusing Temperature 252
15.8.2 Fusing Speed 253
15.8.3 Printer Area 254
15.8.4 Printer Resist Loop 259
15.8.5 Color Registration Adjustment 260
15.8.6 LD adjustment 261
15.8.7 Bypass Tray Adjust 262
15.8.8 Exhaust Fan Delay 262
15.9 Process Adjustment 263
15.9.1 Dmax Density 263
15.9.2 TCR Level Setting 263
15.9.3 Background Margin 264
15.9.4 Transfer Output Adj 264
15.9.5 Stabilization 265
15.9.6 Density Adjustment 266
15.9.7 Replenish Toner 266
15.9.8 Bias Choice 266
15.10 Finisher 267
15.10.1 CB-FN Adjust 267
15.10.2 FN-X3 Adjust 267
15.10.3 Punch option setting 267
15.11 Internet ISW 268
15.11.1 Internet ISW Set 268
15.11.2 HTTP Settings 268
15.11.3 FTP Settings 269
15.11.4 Forward Access Set 270
15.11.5 Download 271
15.12 Settings in the Enhanced Security 272
15.12.1 Admin. Password 272
15.12.2 Service Password 272

15.12.3 Data Backup 272
15.12.4 Admin. Auth Lock REL 273
15.12.5 Release time 273
15.13 CS Remote Care 274
15.13.1 Outlines 274
15.13.2 Setting up the CS Remote Care 274
15.13.3 Software SW setting for CS Remote Care 277
15.13.4 Setup confirmation 282
15.13.5 Calling the maintenance 282
15.13.6 Calling the center from the administrator 283
15.13.7 Checking the transmission log 283
15.13.8 Detail on settings 283
15.13.9 List of the CS Remote Care error code 289
15.13.10 Troubleshooting for CS Remote Care 293
16. Jig Software 294
16.1 Construction of the jig software 294
16.1.1 Connecting the equipment cables 295
16.1.2 Starting the PC and the printer 295
16.1.3 Jig software disconnection procedures 297
16.2 Calling the Service Mode to screen 298
16.2.1 Exiting 298
16.3 Service Mode function tree 299
16.4 Date/Time Input mode 304
16.4.1 Date & Time Setting mode screen 304
16.5 Machine 305
16.5.1 Fusing Temperature 305
16.5.2 Fusing Transport Speed 306
16.5.3 Printer Area 307
16.5.4 Printer Resist Loop 312
16.5.5 Color Registration Adjustment 313
16.5.6 Exhaust Fan Stop Delay 314
16.5.7 LD adjustment 314
16.5.8 Manual Bypass Tray Adjustment 316
16.5.9 Lead Edge Erase Adjustment 316
16.6 Firmware Version 316
16.7 Imaging Process Adjustment 317
16.7.1 X-Rite Caribration 317
16.7.2 D Max Density 317

16.7.3 TCR Level Setting 318
16.7.4 Background Voltage Margin 318
16.7.5 Transfer Output Fine Adjustment 319
16.7.6 Stabilizer 320
16.7.7 Thick Paper Density Adjustment 320
16.7.8 TCR Toner Supply 321
16.7.9 Monochrome Density Adjustment 321
16.7.10 Dev. Bias Choice 321
16.8 CS Remote Care 322
16.8.1 Outlines 322
16.8.2 Setting up the CS Remote Care 322
16.8.3 Software SW setting for CS Remote Care 325
16.8.4 Setup confirmation 330
16.8.5 Calling the maintenance 330
16.8.6 Calling the center from the administrator 331
16.8.7 Checking the transmission log 331
16.8.8 Detail on settings 331
16.8.9 List of the CS Remote Care error code 337
16.8.10 Troubleshooting for CS Remote Care 340
16.9 System 1 341
16.9.1 Marketing Area 341
16.9.2 Serial Number 341
16.9.3 No Sleep 341
16.9.4 Foolscap Size Setting 342
16.9.5 Install Date 342
16.9.6 Initialization 342
16.9.7 Trouble Isolation 343
16.9.8 IU Life Setting 343
16.9.9 Change Warm Up Time 344
16.9.10 Machine State LED Setting 344
16.10 System 2 345
16.10.1 HDD 345
16.10.2 Image Controller Setting 345
16.10.3 Consumable Life Reminder 345
16.10.4 Unit Change 346
16.10.5 Software Switch Setting 346
16.10.6 LCT Paper Size Setting 347
16.10.7 Data Capture 348

16.11 Counter 351
16.11.1 Procedure 351
16.11.2 Life 351
16.11.3 Jam 352
16.11.4 Service Call Counter 352
16.11.5 Warning 352
16.11.6 Maintenance 352
16.11.7 Service Total 353
16.11.8 Counter of Each Mode 353
16.11.9 Service Call History (Data) 353
16.11.10 Paper Jam History 353
16.12 List Output 354
16.12.1 Machine Management List 354
16.12.2 Adjustment List 354
16.13 State Confirmation 355
16.13.1 Sensor Check 355
16.13.2 Sensor check screens 356
16.13.3 Sensor check list 360
16.13.4 Table Number 367
16.13.5 Level History1 367
16.13.6 Level History 2 367
16.13.7 Temp. & Humidity 367
16.13.8 CCD Check 368
16.13.9 Memory/HDD Adj. 368
16.13.10 Memory/HDD State 370
16.13.11 Color Regist 371
16.13.12 IU Lot No. 371
16.13.13 Adjustment Data List 371
16.14 Test Mode 372
16.14.1 Procedure for test pattern output 372
16.14.2 Gradation Pattern 372
16.14.3 Halftone Pattern 373
16.14.4 Lattice Pattern 373
16.14.5 Solid Pattern 374
16.14.6 Color Sample 374
16.14.7 8 Color Solid Pattern 375
16.14.8 CMM pattern 375
16.14.9 Running Mode 375

16.15 Finisher 376
16.15.1 CB-FN adjustment 376
16.15.2 FN-X3 Adjustment 376
16.15.3 Punch option setting 376
16.16 Internet ISW 377
16.16.1 Internet ISW Set 377
16.16.2 HTTP Setting 377
16.16.3 FTP Setting 378
16.16.4 Forwarding Access Setting 379
16.16.5 Download 380
16.17 Enhanced Security function setting procedure 381
16.17.1 Procedure 381
16.17.2 Exiting 381
16.17.3 Enhanced Security function tree 381
16.17.4 CE Password 382
16.17.5 Administrator Password 382
16.17.6 CE Authentication 382
16.17.7 IU Life Stop Setting 383
16.17.8 NVRAM Data Backup 383
16.17.9 Operation Ban release time 383
16.17.10 Administrator unlocking 384
16.18 Billing Setting function setting procedure 385
16.18.1 Procedure 385
16.18.2 Exiting 385
16.18.3 Billing Setting function tree 385
16.18.4 Counter Setting 386
16.18.5 Management Function Choice 387
16.18.6 Coverage Rate Clear 387
17. Procedure for resetting 388
17.1 Trouble resetting 388
17.2 Contents to be cleared by reset function 388
18. Mechanical adjustment 389
18.1 Mechanical adjustment of the paper feed section 389
18.1.1 Skew adjustment of the tray 1, 2 389
18.1.2 Centering adjustment of the tray 1, 2 390
18.1.3 Adjustment of the manual bypass tray paper size unit 391
18.2 PH unit mechanical adjustment 392
18.2.1 Skew adjustment 392

Troubleshooting

19. Jam display 395
19.1 Misfeed display 395
19.1.1 Misfeed display resetting procedure 396
19.2 Sensor layout 397
19.3 Solution 398
19.3.1 Initial check items 398
19.3.2 Solution when paper curl occurs 398
19.3.3 Misfeed at tray 1 feed section 399
19.3.4 Misfeed at tray 2 feed section 400
19.3.5 Misfeed at manual bypass feed section 401
19.3.6 Misfeed at duplex pre-registration section 402
19.3.7 Misfeed at tray 2 vertical transport section 403
19.3.8 Misfeed at 2nd image transfer section 404
19.3.9 Misfeed at exit section 405
19.3.10 Misfeed at duplex transport section 406
19.3.11 Controller jam 407
20. Malfunction code 408
20.1 Alert code 408
20.1.1 Alert code list 408
20.2 Solution 410
20.2.1 P-5: IDC sensor (front) failure 410
20.2.2 P-28 IDC sensor (rear) failure 410
20.2.3 P-6: Cyan imaging unit failure 410
20.2.4 P-7: Magenta imaging unit failure 410
20.2.5 P-8: Yellow imaging unit failure 410
20.2.6 P-9: Black imaging unit failure 410
20.2.7 P-21: Color regist test pattern failure 411
20.2.8 P-22: Color regist adjust failure 411
20.2.9 P-27: Secondary transfer ATVC failure 411
20.2.10 P-30: Color PC drive sensor malfunction 412
20.2.11 P-31: Black PC drive sensor malfunction 412
20.3 Trouble code 413
20.3.1 Trouble code list 413
20.4 How to reset 435
20.5 Solution 436
20.5.1 C0202: Tray 1 feeder up/down abnormality 436
20.5.2 C0204: Tray 2 feeder up/down abnormality 436

20.5.3 C0211: Manual feed up/down abnormality 437
20.5.4 C0301: Suction fan motor's failure to turn 437
20.5.5 C2151: Secondary transfer roller pressure welding alienation 438
20.5.6 C2152: Transfer belt pressure welding alienation 438
20.5.7 C2164: PC charge malfunction 439
20.5.8 C2253: Color PC motor's failure to turn 439
20.5.9 C2254: Color PC motor's turning at abnormal timing 439
20.5.10 C225D: Color dev. unit engagement/disengagement failure 440
20.5.11 C2351: K toner suction fan motor's failure to turn 440
20.5.12 C2451: Release new transfer belt unit 441
20.5.13 C2551: Abnormally low toner density detected cyan TCR sensor 441
20.5.14 C2553: Abnormally low toner density detected magenta TCR sensor 441
20.5.15 C2555: Abnormally low toner density detected yellow TCR sensor 441
20.5.16 C2552: Abnormally high toner density detected cyan TCR sensor 442
20.5.17 C2554: Abnormally high toner density detected magenta TCR sensor 442
20.5.18 C2556: Abnormally high toner density detected yellow TCR sensor 442
20.5.19 C2557: Abnormally low toner density detected black TCR sensor 442
20.5.20 C2558: Abnormally high toner density detected black TCR sensor 443
20.5.21 C2559: Cyan TCR sensor adjustment failure 443
20.5.22 C255A: Magenta TCR sensor adjustment failure 443
20.5.23 C255B: Yellow TCR sensor adjustment failure 443
20.5.24 C255C: Black TCR sensor adjustment failure 443
20.5.25 C2650: Main backup media access error 444
20.5.26 C2651: EEPROM access error (IU C) 445
20.5.27 C2652: EEPROM access error (IU M) 445
20.5.28 C2653: EEPROM access error (IU Y) 445
20.5.29 C2654: EEPROM access error (IU K) 445
20.5.30 C2A01: EEPROM access error (TC C) 445
20.5.31 C2A02: EEPROM access error (TC M) 445
20.5.32 C2A03: EEPROM access error (TC Y) 445
20.5.33 C2A04: EEPROM access error (TC K) 445
20.5.34 C3101: Fusing roller separation failure 446
20.5.35 C3201: Fusing motor failure to turn 446
20.5.36 C3202: Fusing motor turning at abnormal timing 446
20.5.37 C3301: Fusing cooling fan motor/ 1 failure to turn 447
20.5.38 C3302: Fusing cooling fan motor/ 2,3 failure to turn 447
20.5.39 C3421: Fusing heaters trouble (heating side) 448

20.5.40 C3423: Fusing heaters trouble (pressurizing side) 448
20.5.41 C3461: Release new fusing unit 448
20.5.42 C3721: Fusing abnormally high temperature detection (heating side) 449
20.5.43 C3723: Fusing abnormally high temperature detection (pressurizing side) 449
20.5.44 C3821: Fusing abnormally low temperature detection (heating side)..... 449
20.5.45 C3823: Fusing abnormally low temperature detection (pressurizing side) 449
20.5.46 C4151: Polygon motor rotation trouble (C) 450
20.5.47 C4152: Polygon motor rotation trouble (M) 450
20.5.48 C4153: Polygon motor rotation trouble (Y) 450
20.5.49 C4154: Polygon motor rotation trouble (K) 450
20.5.50 C4551: Laser malfunction (C) 450
20.5.51 C4552: Laser malfunction (M) 450
20.5.52 C4553: Laser malfunction (Y) 450
20.5.53 C4554: Laser malfunction (K) 450
20.5.54 C5102: Transport motor's failure to turn..... 451
20.5.55 C5103: Transport motor's turning at abnormal timing..... 451
20.5.56 C5351: Power supply cooling fan motor's failure to turn 451
20.5.57 C5353: Cooling fan motor/2's failure to turn..... 452
20.5.58 C5354: Exhaust fan motor's failure to turn..... 452
20.5.59 C5357: Cooling fan motor/1's failure to turn..... 453
20.5.60 C5371: MFP board cooling fan motor's failure to turn..... 453
20.5.61 CA051: Standard controller configuration failure 454
20.5.62 CA052: Controller hardware error..... 454
20.5.63 CA053: Controller start failure 454
20.5.64 CC151: ROM contents error upon startup (MSC)..... 454
20.5.65 CC153: ROM contents error upon startup (PRT) 454
20.5.66 CC163: ROM contents error (PRT)..... 455
20.5.67 CC164: ROM contents error (MSC)..... 456
20.5.68 CD002: JOB RAM save error..... 456
20.5.69 CD004: Hard disk access error..... 457
20.5.70 CD005: Hard disk error 1..... 457
20.5.71 CD006: Hard disk error 2..... 457
20.5.72 CD007: Hard disk error 3..... 457
20.5.73 CD008: Hard disk error 4..... 457
20.5.74 CD009: Hard disk error 5..... 457
20.5.75 CD00A: Hard disk error 6 457
20.5.76 CD00B: Hard disk error 7 457

20.5.77 CD00C: Hard disk error 8 457
20.5.78 CD00D: Hard disk error 9 457
20.5.79 CD00E: Hard disk error A 457
20.5.80 CD00F: Hard disk data transfer error 457
20.5.81 CD020: Hard disk verify error 457
20.5.82 CD010: Hard disk unformat 457
20.5.83 CD011: Hard disk out of specifications mounted 458
20.5.84 CD201: File memory mounting error 458
20.5.85 CD202: Memory capacity discrepancy 458
20.5.86 CD203: Memory capacity discrepancy 2 458
20.5.87 CD211: PCI-SDRAM DMA operation failure 458
20.5.88 CD212: Compression/extraction timeout detection 458
20.5.89 CD241: Encryption board setting error 459
20.5.90 CD242: Encryption board mounting error 459
20.5.91 CD261: USB host board failure 459
20.5.92 CD3##: NVRAM data error 460
20.5.93 CD401: NACK command incorrect 460
20.5.94 CD402: ACK command incorrect 460
20.5.95 CD403: Checksum error 460
20.5.96 CD404: Receiving packet incorrect 460
20.5.97 CD405: Receiving packet analysis error 460
20.5.98 CD406: ACK receiving timeout 460
20.5.99 CD407: Retransmission timeout 460
20.5.100 CE001: Abnormal message queue 461
20.5.101 CE003: Task error 461
20.5.102 CE004: Event error 461
20.5.103 CE005: Memory access error 461
20.5.104 CE006: Header access error 461
20.5.105 CE007: DIMM initialize error 461
20.5.106 CE002: Message and method parameter failure 461
20.5.107 CEEE1: MSC undefined malfunction occurring 462
20.5.108 CEEE3: Engine section undefined malfunction 462
21. Power supply trouble 463
21.1 Machine is not energized at all (DCPU operation check) 463
21.2 Control panel indicators do not light. 463
21.3 Fusing heaters do not operate 464
21.4 Power is not supplied to option 464
21.4.1 PC-104/204/405 464

21.4.2 FS-519/FS-609 ... 464
22. Image quality problem ... 465
22.1 How to read element date ... 465
22.1.1 Table number ... 466
22.1.2 Level history 1 ... 467
22.1.3 Level history 2 ... 468
22.2 How to identify problematic part ... 469
22.2.1 Initial check items ... 469
22.3 Solution ... 471
22.3.1 Printer monocolor: white lines in sub scan direction, white bands in sub scan direction, colored lines colored bands in sub scan direction ... 471
22.3.2 Printer monocolor: white lines in main scan direction, white bands in main scan direction, colored lines in main scan direction, colored bands in main scan direction ... 472
22.3.3 Printer monocolor: uneven density in sub scan direction ... 473
22.3.4 Printer monocolor: uneven density in main scan direction ... 474
22.3.5 Printer monocolor: low image density ... 475
22.3.6 Printer monocolor: gradation reproduction failure ... 477
22.3.7 Printer monocolor: foggy background ... 478
22.3.8 Printer monocolor: void areas, white spots ... 480
22.3.9 Printer monocolor: colored spots ... 481
22.3.10 Printer monocolor: blurred image ... 482
22.3.11 Printer monocolor: blank print, black print ... 483
22.3.12 Printer monocolor: uneven image ... 484
22.3.13 Printer 4-color: white lines in sub scan direction, white bands in sub scan direction, colored lines in sub scan direction, and colored bands in sub scan direction ... 485
22.3.14 Printer 4-color: white lines in main scan direction, white bands in main scan direction, colored lines in main scan direction, and colored bands in main scan direction ... 486
22.3.15 Printer 4-color: uneven density in sub scan direction ... 487
22.3.16 Printer 4-color: uneven density in main scan direction ... 488
22.3.17 Printer 4-color: low image density ... 489
22.3.18 Printer 4-color: poor color reproduction ... 490
22.3.19 Printer 4-color: incorrect color image registration ... 491
22.3.20 Printer 4-color: void areas, white spots ... 492
22.3.21 Printer 4-color: colored spots ... 493
22.3.22 Printer 4-color: poor fusing performance, offset ... 494
22.3.23 Printer 4-color: brush effect, blurred image ... 495
22.3.24 Printer 4-color: back marking ... 496

22.3.25 Printer 4-color: uneven image 497
23. Controller trouble 498
23.1 Unable to print over the network 498
23.1.1 The “RIP” is displayed on the machine control panel. 498
23.1.2 The “RIP” is not displayed on the machine control panel. 498

Appendix

24. Parts layout drawing 499
24.1 Main body 499
24.1.1 Engine section 499
24.1.2 Tray 1, manual bypass tray 503
24.1.3 Tray 2 504
24.2 PC-104/204 (option) 505
24.3 PC-405 (option) 506
24.4 FS-519 (option) 507
24.5 PK-515 (option) 510
24.6 MT-502 (option) 511
24.7 SD-505 (option) 512
24.8 FS-609 (option) 513
24.9 PK-501 (option) 516
25. Connector layout drawing 517
26. Timing chart 520
26.1 Main body 520

Blank Page

General

1. System configuration

1/2 System front view

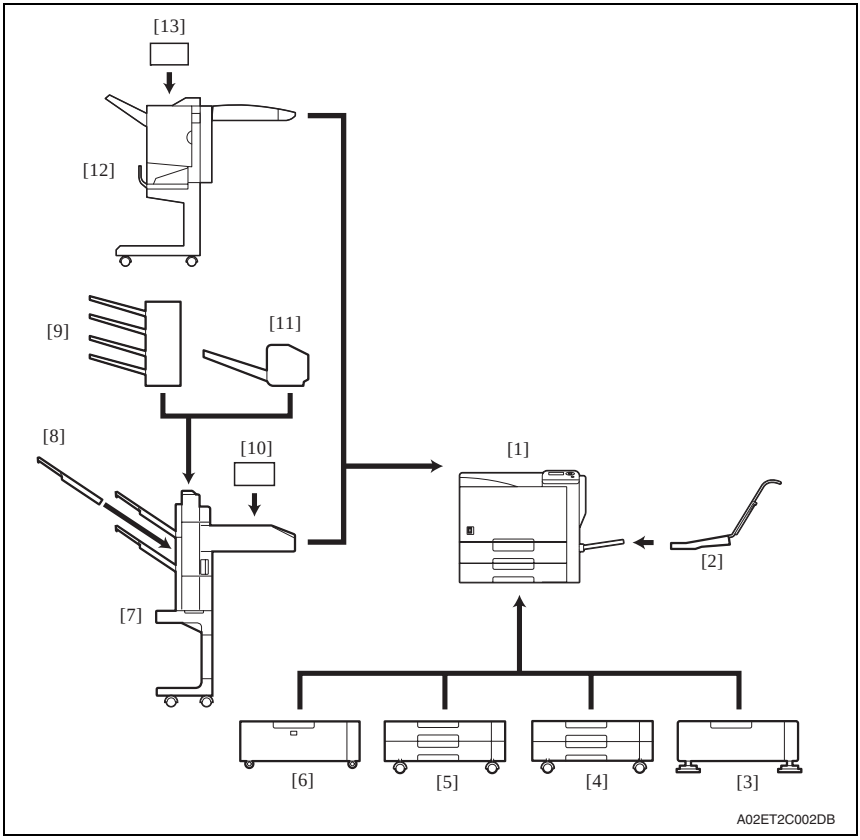

[1]	Main body		[8]	Output tray	OT-602
[2]	Mount kit	MK-713	[9]	Mailbin kit	MT-502
[3]	Desk	DK-504	[10]	Punch kit	PK-515
[4]	Paper feed cabinet	PC-104	[11]	Saddle stitcher	SD-505
[5]	Paper feed cabinet	PC-204	[12]	Finisher	FS-609
[6]	Paper feed cabinet	PC-405	[13]	Punch kit	PK-501
[7]	Finisher	FS-519			

2/2 System rear view

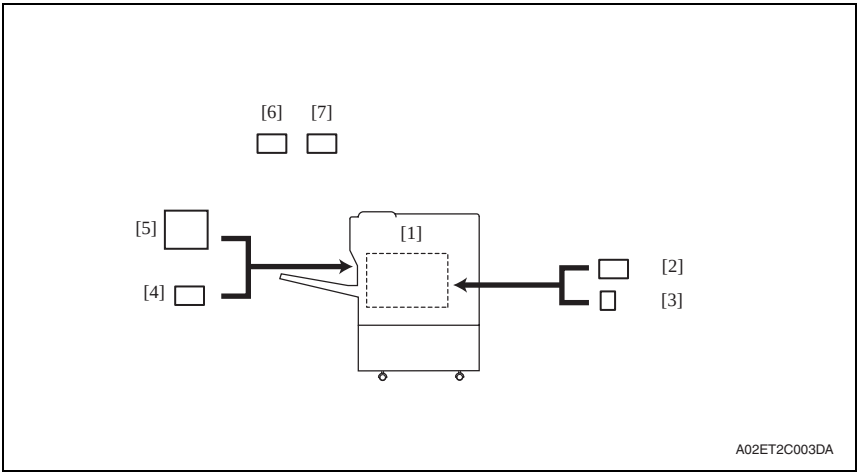

[1]	Main body		[5]	Mount kit	MK-711
[2]	Hard disk	HD-508	[6]	Authentication unit (biometric type)	AU-101
[3]	Security kit	SC-503	[7]	Authentication unit (IC card type)	AU-201
[4]	Local interface kit	EK-603			

2. Product specifications

A. Type

Type	Desktop/console *1 printer
Printing process	Laser electrostatic printing system
PC drum type	OPC drum: KM-12 (OPC with high mold releasability)
Paper feeding separation system	Manual bypass : Small roller separation system with torque limiter Tray 1 : Roller separation system with pick-up mechanism Tray 2 : Roller separation system with pick-up mechanism Tray 3 : Roller separation system with pick-up mechanism Tray 4 : Roller separation system with pick-up mechanism
Exposure system	• Four-multi array PH unit system • Polygon mirror scan system
Exposure density	Equivalent to 1800 dpi in main scanning direction × 600 dpi in sub scanning direction
Developing system	Dry 2 components developing method, HMT developing system
Charging system	DC comb electrode scorotron system with electrode cleaning function (manual)
Neutralizing system	Red LED system
Image transfer system	Belt image transfer system (1st)/roller image transfer system (2nd)
Paper separating system	Combination of curvature, separating claws, and bias system
Fusing system	Belt fusing
Heating system	Halogen lamp

*1: Only when the optional paper feed cabinet/desk is installed.

B. Functions

Warm-up time (at ambient temperature of 23° C/73.4° F and rated source voltage)		75 sec. or less (Monochrome print, Color print)	
Image loss		Leading edge: 4.2 mm (3/16 inch), Trailing edge: 3 mm (1/8 inch), Rear edge: 3 mm (1/8 inch), Front edge: 3 mm (1/8 inch)	
First print time		(Tray1/2 A4 or 8 1/2 x 11, full size)	
		5.9 sec. or less (Monochrome print) 8.5 sec. or less (Color print)	
Processing speed	Plain paper (monochrome, full color), OHP film *2	166.6 mm/s	
	Thick 1, Thick 2, Thick 3, Thick 4, Post card, Envelope, Label sheet	55.5 mm/s	
△1 Printing speed for continuous-print cycle (A4 or 8 1/2 x 11, plain paper)	Monochrome, Full color	1-sided: 35 prints/min, 2-sided: 35 prints/min	
Paper size	Tray 1	Metric area	A3 to B5/B5S, A5S, 16K, 8K
		Inch area	11 x 17 to 8 1/2 x 11/8 1/2 x 11S, 5 1/2 x 8 1/2S, 8 x 13
	Tray 2	Metric area	A3 to B5/B5S, A3 wide, 16K, 8K
		Inch area	12 x 18 to 8 1/2 x 11/8 1/2 x 11S, 5 1/2 x 8 1/2S, 8 x 13
	Manual bypass tray	Metric area	A3 to B6S, A6S, A3 wide, banner paper, 16K/16KS,8K
		Inch area	12 x 18 to 5 1/2 x 8 1/2/5 1/2 x 8 1/2S, 4 x 6S, 8 x 13
Print exit tray capacity	Plain paper	250 sheets	
	Thick paper	10 sheets	
	OHP film	1 sheet	

C. Paper

Type		Paper source (maximum tray capacity)		
		Tray 1	Tray 2	Multiple bypass
Print paper type	Plain paper (60 to 90 g/m² / 16 to 24 lb)	❍ (500 sheets)	❍ (500 sheets)	❍ (150 sheets)
	Translucent paper	—	—	—
	OHP film (crosswise feeding only) *2	—	—	❍ (20 sheets)
	Thick paper 1 (91 to 150 g/m² / 24.25 to 40 lb)	150 sheets	150 sheets	
	Thick paper 2 (151 to 209 g/m² / 40.25 to 55.5 lb)			
	Thick paper 3 (210 to 256 g/m² / 55.75 to 68 lb) *1			
	Thick paper 4 (256 to 271 g/m² / 68 lb to 72 lb) *1	—	—	
	Postcards	—	—	
	Envelopes	—	—	❍ (10 sheets)
	Labels	—	—	❍ (20 sheets)
	Long size paper (127 to 210 g/m² / 33.75 to 55.75 lb)	—	—	❍ (10 sheets)
Print paper dimensions	Width	139.7 to 297 mm 5 1/2 to 11 3/4 inch	139.7 to 311.1 mm 5 1/2 to 12 1/4 inch	90 to 311.1 mm 3 1/2 to 12 1/4 inch
	Length	182 to 431.8 mm 7 1/4 to 17 inch	182 to 457.2 mm 7 1/4 to 18 inch	139.7 to 457.2 mm 5 1/2 to 18 inch
	Long size paper (Width x Length)	—	—	210 to 297 mm x 457.3 to 1200 mm or less 8 1/4 to 11 3/4 inch x 18 to 47 1/4 inch or less

*1: Image is not guaranteed when thick paper 3/4 is used.

*2: Monochrome print only.

Automatic duplex unit : Only the plain paper weighing 64 to 90 g/m² (17 to 24 lb) or thick paper weighing 91 to 256 g/m² (24.25 to 68 lb) are reliably fed.

D. Maintenance

No. of pages printed per month (average)	Color print	1,800 prints
	Monochrome print	7,400 prints
Standard print mode	Color print	4pages/job
	Monochrome print	4 pages/job
Standard original density	Color print	C, M, Y, K 5%
	Monochrome print	K 5%

E. Machine specifications

Power requirements	Voltage:	AC 100 V, 120 V, 127 V, 220-240 V	
	Current:	100 V	15 A
		110 V	15 A
		120 V	12 A
		127 V	12 A
		230 V	8 A
	Frequency:	50/60 Hz ± 3 Hz	
Max power consumption		1,500 W or less	
Dimensions		643 *1 (W) x 708 (H) x 637 mm (H) 25.25 *1 (W) x 27.75 (D) x 25 inch (H)	
Space requirements		991 (W) x 708 mm (D) 39 (W) x 27.75 inch (D) 2,104 (W) x 1,198 mm (D) *2 82.75 (W) x 47.25 inch (D) *2	
Weight	Machine	Approx. 79 kg / 174.25 lb (without IU and TC)	
	IU and TC	Approx. 6.8 kg / 15 lb	

*1: Width when the manual bypass tray is closed

*2: When the finisher is separated and the paper feed tray is slide out

F. Operating environment

Temperature	10 to 30° C / 50 to 86° F (with a fluctuation of 10° C / 18° F or less per hour)
Humidity	15 to 85% (Relative humidity with a fluctuation of 10%/h)
Levelness	Difference between front and back, right and left should be 1 degree or under.

G. Print functions

Type	Built-in type controller	
Printer language	PCL5e/c emulation PCL XL Ver. 2.1 emulation PostScript 3 emulation (3016) XPS Ver. 1.0	
RAM	1024 MB	
Hard Disk	60 GB (Option)	
Host interface	Ethernet (10Base-T, 100Base-TX or 1,000Base-T) USB 2.0/1.1	
Network protocol	TCP/IP(IPv4/IPv6), BOOTP, ARP, ICMP, DHCP, AutoIP, SNMP, FTP, LPR/LPD, RAW Socket, SMB over TCP/IP, IPP, HTTP, POP, SMTP, LDAP, NTP, SSL, IPX/SPX, AppleTalk, Bonjour, NetBEUI, WSD, IPsec, DNS, DynamicDNS	
Network print service	Pserver (NDS) ... NetWare 4.x, 5.x, 6.x Pserver (Bindery) ... NetWare 4.x NDPS ... NetWare 5.x, 6.x SMB, RAW port printing IPP 1.1 LPD	
Driver	PCL6 printer driver	• Windows NT4.0 (SP6a or later) • Windows 2000 Professional (SP3 or later) • Windows XP Home Edition/Professional • Windows XP Professional x64 • Windows Vista Home Basic /Home Premium /Ultimate /Business /Enterprise, Windows Vista Home Basic/ Home Premium /Ultimate /Business /Enterprise x64 edition • Windows Server 2003, Windows Server 2003 x64
	PS3 printer driver	• Windows 2000 Professional (SP3 or later) • Windows XP Home Edition/Professional • Windows XP Professional x64, • Windows Vista Home Basic /Home Premium /Ultimate /Business /Enterprise, Windows Vista Home Basic/ Home Premium /Ultimate /Business /Enterprise x64 edition • Windows Server 2003, Windows Server 2003 x64
	PostScript PPD driver	• Macintosh OS 9.2 or later • Macintosh OS X 10.2.8/10.3/10.4
	XPS driver	• Windows Vista XPS mini driver
Utility	PageScope Web Connection	
Compatible paper size	Max. standard paper size A3 Wide (Long size paper: Width 210 mm to 297 mm x Length 457.3 mm to 1200 mm)	
Operating environmental requirements	10 to 30° C (50 to 86° F) 15 to 85 %	
Fonts	PCL	Latin 80 fonts
	PS	Latin 137 fonts

NOTE

- **These specifications are subject to change without notice.**

3. Section configuration

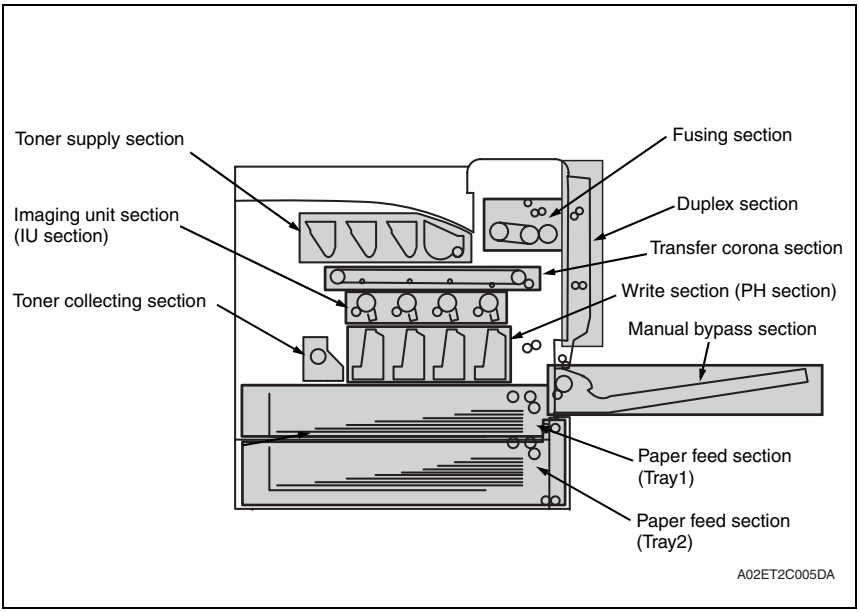

4. Paper path

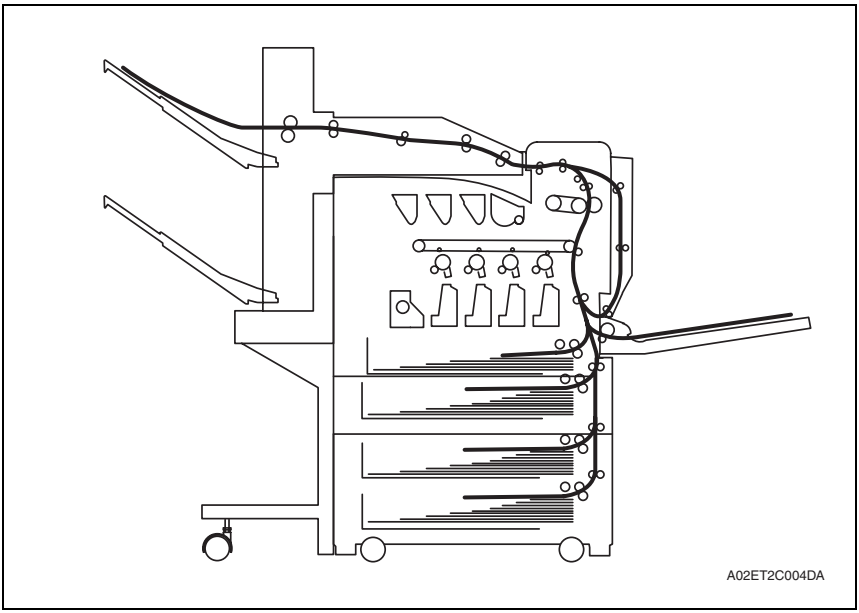

5. Image creation process

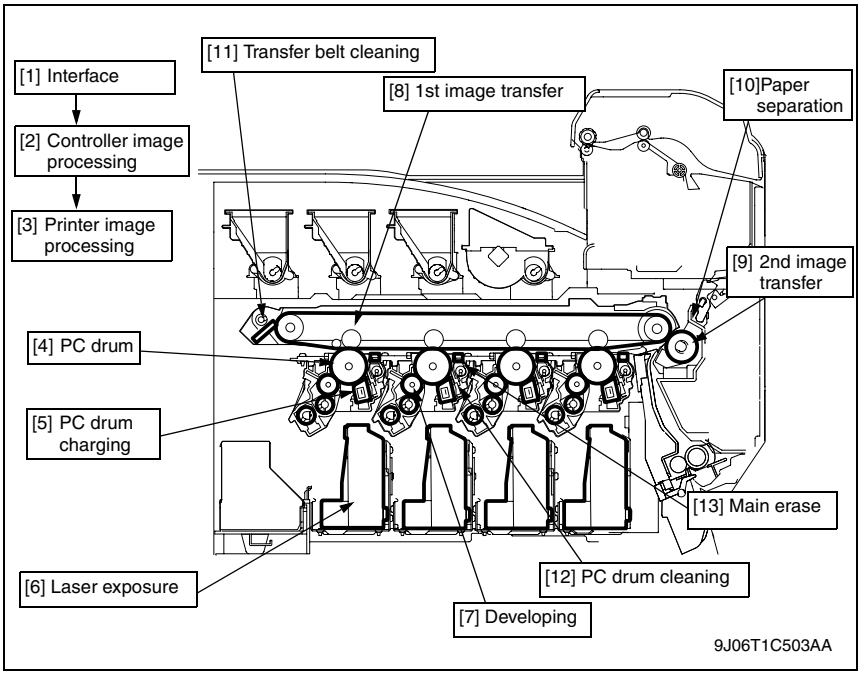

[1]	Interface	• It is the access system to scan the printed data from the PC to the printer. This model supports the ethernet as standard.
[2]	Controller image processing	• Printed data in page description language are converted to VIDEO signals (C, M, Y, and Bk) to output to the printer's image processing section.
[3]	Printer image processing	• D/A conversion will be performed after the VIDEO signals (Y, M, C, Bk) are corrected. This data will control the emission of the laser diode.
[4]	PC drum	• The image of the original projected onto the surface of the PC drum is changed to a corresponding electrostatic latent image.
[5]	PC drum charging	• Supply DC (-) charge on the PC drum.
[6]	Laser exposure	• Expose photo conductor to a laser beam to develop electrostatic latent image.
[7]	Developing	• The toner, agitated and negatively charged in the developer mixing chamber, is attracted onto the electrostatic latent image formed on the surface of the PC drum. It is thereby changed to a visible, developed image. • AC and DC negative bias voltages are applied to the developing roller, thereby preventing toner from sticking to the background image portion.
[8]	1st image transfer	• A DC positive voltage is applied to the backside of the transfer belt, thereby allowing the visible, developed image on the surface of each of the PC drums (Y, M, C, and K) to be transferred onto the transfer belt.
[9]	2nd image transfer	• A DC positive voltage is applied to the backside of the paper, thereby allowing the visible, developed image on the surface of the transfer belt to be transferred onto the paper.

[10]	Paper separation	• The paper, which has undergone the 2nd image transfer process, is neutralized so that it can be properly separated from the transfer belt by the paper separator claws.
[11]	Transfer belt cleaning	• Residual toner on the surface of the transfer belt is collected for cleaning by cleaning blade.
[12]	PC drum cleaning	• The residual toner left on the surface of the PC drum is scraped off.
[13]	Main erase	• The surface of the PC drum is irradiated with light, which neutralizes any surface potential remaining on the surface of the PC drum.

Maintenance

6. Periodical check

6.1 Service schedule

6.1.1 Main body

Guarantee period: 5-year or 800,000 prints

Service item	x 10,000-print																		No. of times
	6	12	15	18	20	24	30	36	40	42	45	48	54	60	66	72	75	78	
Upon each call (60,000)	●	●		●		●	●	●		●		●	●	●	●	●		●	13
150,000			●				●				●			●			●		5
200,000					●				●					●					3
300,000							●							●					2
400,000									●										1

6.1.2 Options

A. PC-104/204/405

Guarantee period: conforms to the guarantee period of the main body

Service item	x 10,000-print																		No. of times
	6	12	15	18	20	24	30	36	40	42	45	48	54	60	66	72	75	78	
300,000							●							●					2

B. FS-519

Guarantee period: conforms to the guarantee period of the main body

Service item	x 10,000-print																		No. of times
	6	12	15	18	20	24	30	36	40	42	45	48	54	60	66	72	75	78	
300,000							●							●					2

⚠ **C. FS-609**

Guarantee period: conforms to the guarantee period of the main body

Service item	x 10,000-print																		No. of times
	6	12	15	18	20	24	30	36	40	42	45	48	54	60	66	72	75	78	
300,000							●							●					2

6.2 Maintenance items

NOTE

- **To determine when the main body and option maintenance items need cleaning or replacing, use the jig software and select [Service Mode] → [Counter] → [Life] in the software to check the relevant life counter values.**

6.2.1 Main body

A. Parts to be replaced by users (CRU)

No	Class	Parts to be replaced	Cycle	Clean	Replace	Descrip-tions
1	Processing sections	Imaging unit Y,M,C	90,000		●	*1
2		Imaging unit K	120,000		●	*1
3		Toner cartridge Y,M,C	20,000		●	*1
4		Toner cartridge K	26,000		●	*1
5		Electrostatic charger wire	When toner cartridge K is replaced	●		
6	Image transfer section	Waste toner box	(50,000)		●	*1,2

*1: The parts can be replaced either by user or service engineer.
For details of setting, see [Unit Replacement] on “Adjustment/Setting.” See P.237
*2: A waste toner full condition is detected with detecting the actual waste toner emissions.

B. Periodical parts replacement/cleaning 1 (per 150,000-print)

No.	Class	Parts to be replaced	Qt.	Check	Clean	Replace	Lubri-cation	Descrip-tions
1	Overall	Paper feed and image conditions	—	●				
2		Appearance	—	●	●			
3	Image transfer section	Image transfer entrance guide	—		●			
4		IDC/registration sensor	—		●			
5		Transfer belt unit	1			●		
6		Transfer roller unit	1			●		
7	Processing sections	Ozone filter	1			●		

C. Periodical parts replacement/cleaning 2 (per 200,000-print)

No.	Class	Parts to be replaced	Qt.	Check	Clean	Replace	Lubrication	Descriptions
1	Overall	Paper feed and image conditions	—	●				
2		Appearance	—	●	●			
3	Manual bypass tray	Feed roller	1			●		*1
4		Separation roller assy	1			●		

*1: Replace those parts at the same time.

D. Periodical parts replacement/cleaning 3 (per 300,000-print)

No.	Class	Parts to be replaced	Qt.	Check	Clean	Replace	Lubrication	Descriptions
1	Overall	Paper feed and image conditions	—	●				
2		Appearance	—	●	●			
3	Paper feed tray 1 Paper feed tray 2	Pick-up roller	1			●		*1
		Feed roller	1			●		
		Separation roller assy	1			●		

*1: Replace those parts at the same time.

E. Periodical parts replacement/cleaning 4 (per 400,000-print)

No.	Class	Parts to be replaced	Qt.	Check	Clean	Replace	Lubrication	Descriptions
1	Overall	Paper feed and image conditions	—	●				
2		Appearance	—	●	●			
3	Fusing section	Fusing unit	1			●		

6.2.2 PC-104/204/405

A. Periodical parts replacement/cleaning 1 (per 300,000-print)

No.	Class	Parts to be replaced	Qt.	Check	Clean	Replace	Lubrication	Descriptions
1	Overall	Paper feed and image conditions	—	●				
2		Appearance	—	●	●			
3	Paper feed section	Pick-up roller	1			●		*1
4		Feed roller	1			●		
5		Separation roller	1			●		

*1: Replace those three parts at the same time.

6.2.3 FS-519

A. Periodical parts replacement/cleaning 1 (per 300,000-print)

No.	Class	Parts to be replaced	Qt.	Check	Clean	Replace	Lubrication	Descriptions
1	Overall	Paper feed and image conditions	—	●				
2		Appearance	—	●	●			
3	Conveyance section	Paper feed roller, roll	—		●			
4		Paddle	—		●			

B. Periodical parts replacement/cleaning 2 (per 800,000-print)

No.	Class	Parts to be replaced	Qt.	Check	Clean	Replace	Lubrication	Descriptions
1	Overall	Paper feed and image conditions	—	●				
2		Appearance	—	●	●			
3	Conveyance section	Paddle	1			●		
4		Cleaning pad	1			●		
5		Worm gear	—		●		●	
6		Cover film	1			●		

⚠1 6.2.4 FS-609

A. Periodical parts replacement/cleaning 1 (per 300,000-print)

No.	Class	Parts to be replaced	Qt.	Check	Clean	Replace	Lubrication	Descriptions
1	Overall	Paper feed and image conditions	—	●				
2		Appearance	—	●	●			
3	Conveyance section	Paper transport roller, roll	—		●			

6.3 Maintenance parts

- To ensure that the machine produces good prints and to extend its service life, it is recommended that the maintenance jobs described in this schedule be carried out as instructed.
- To check when parts need replacing, operate the control panel as follows: [Service Mode] → [List Output] → [Management List].
- Maintenance conditions are based on the case of A4 or 8 $^{1}/_{2}$ x 11, standard mode and low power mode OFF.

	Color	B/W
*Standard mode	4 pages per job	4 pages per job

6.3.1 Replacement parts

A. Main body

No.	Classification	Parts name	Qt.	Actual durable cycle *1	Parts No.	Descriptions	Ref. page
1	Paper feed tray 1	Feed roller	1	300,000	A00J 5636 ##	*2	P.21
2		Separation roller assy	1	300,000	A02E F566 ##		P.24
3		Pick-up roller	1	300,000	A00J 5636 ##		P.21
4	Paper feed tray 2	Feed roller	1	300,000	A00J 5636 ##	*2	P.25
5		Separation roller assy	1	300,000	A02E F566 ##		P.28
6		Pick-up roller	1	300,000	A00J 5636 ##		P.25
7	Manual bypass tray	Feed roller	1	200,000	A02E 5947 ##	*2	P.29
8		Separation roller assy	1	200,000	4034 0151 ##		P.31
9	Processing section	Imaging unit Y,M,C	1	90,000	—		P.34
10		Imaging unit K	1	120,000	—		
11		Ozone filter	1	150,000	A02E R730 ##	*3	P.38
12		Toner cartridge Y,M,C	1	20,000	—		P.38
13		Toner cartridge K	1	26,000	—		
14	Image transfer section	Transfer roller unit	1	150,000 *5	A02E R713 ##		P.33
15		Transfer belt unit	1	150,000	A02E R730 ##	*3	P.40
16		Waste toner box	1	(50,000)	A0DT WY0	*4	P.32
17	Fusing section	Fusing unit	1	400,000	A02E R733 ##	*6	P.43
					A02E R720 ##	*7	
					A02E R721 ##	*8	

*1: Actual durable cycle is the life counter value.
*2: Replace those parts at the same time.
*3: The ozone filter is furnished with the transfer belt unit so that all of them are replaced at one time.
*4: A waste toner full condition is detected with detecting the actual waste toner emissions.
*5: Because there is no life-counter for the transfer roller unit, substitute it by the life-counter of the transfer belt unit.
*6: 110 V areas only.
*7: 120 V areas only.
*8: 220-240 V areas only.

B. Option

No.	Classification	Parts name	Qt.	Actual durable cycle *1	Parts No.	Descriptions	Ref. Page
1	PC-104 PC-204 PC-405	Pick-up roller	1	300,000	A00J 5636 ##	*2	*3
2		Feed roller	1	300,000	A02E F566 ##		
3		Separation roller	1	300,000	A00J 5636 ##		
4	FS-519	Paddle	1	800,000	9J08 1605 ##		
			1		A01G 7203 ##		
5		Cleaning pad	1	800,000	A01G 7205 ##		
6		Cover film	1	800,000	A01G 8947 ##		

*1: Actual durable cycle is the life counter value.
*2: Replace those parts at the same time.
*3: See each option service manual.

6.3.2 Cleaning parts

No.	Classification	Parts name	Actual cleaning cycle	Descriptions	Ref.Page
1	Processing section	Electrostatic charger wire	When toner cartridge C/M/Y is replaced		P.19
2	Conveyance section	Timing roller	Upon each call (60,000)		P.19
3	Image transfer section	Area around the waste toner collecting port	Upon each call (60,000)		P.20
4		Image transfer entrance guide	When transfer belt unit is replaced (150,000)		P.42
5		IDC/registration sensor			P.42
6	Duplex section	Duplex transport roller	Upon each call (60,000)		P.20
7	FS-519	Paper feed roller, roll	300,000		*1
8		Paddle	300,000		
9		Worm gear	800,000		
1 10	FS-609	Paper transport roller, roll	300,000		—

*1: See FS-519/PK-515/OT-602 service manual.

6.4 Concept of parts life

6.4.1 Life value of consumables and parts

- To check the life counter value of materials and parts, use the jig software and select [Service Mode] → [Counter] → [Life] in the software.
- Life specification value means an actual life terminated when prints are made under the conditions as defined in the next section, “Conditions for life specifications values.” The actual life may vary greatly depending on how the machine has been used and other factors.

	Description	Life value (Specification value)	Max. life value
Waste toner box	The waste toner full sensor detects the amount of toner accumulated in the waste toner box and sends a signal that determines the end of the waste toner box life.	50,000 *1,2	–
Fusing unit	When the number of printed pages *6 reaches the set life value shown on the right, the end of unit life is detected.	400,000	470,000 *3
Transfer belt unit	Comparing the number of printed pages *6 with the number of printed pages calculated based on how long the transfer belt has run, the machine detects the end of unit life when either of them reaches the set value shown on the right. (However, to detect whether the unit reaches the max. life value, the machine uses only the number of printed pages calculated based on how long the transfer belt has run.)	150,000	180,000 *3
Imaging unit C,M,Y	Comparing the PC drum rotation time with the PC drum rotation time calculated based on the number of printed pages *6, the machine detects the end of unit life when either of them reaches the set value shown in the table below. * The PC drum rotation is calculated based on the distance the PC drum has run.	See the imaging unit life values in the table below.	
Imaging unit K			

<Imaging unit life value *4>

	Life value (Specification value)		Max. life value	
	Normal *5	Suspend *5	Normal *5	Suspend *5
Y,M,C	5,005 M	7,508 M	5,116 M	7,674 M
K	5,674 M	8,511 M	5,769 M	8,654 M

*1: A waste toner full condition is detected with detecting the actual waste toner emissions.
*2: Once the toner-full is detected, it has to be replaced with the new waste toner box in order to reset.
*3: The initiation of any new print cycle is inhibited when reaching the max. life value.
*4: The mark “M” is indicated the value of the number of distance through which the PC drum has run translated to a corresponding value of the number of hours and the value.
*5: “Normal” and “Suspend” are the settings provided in [Service Mode] → [System 1] → [IU Life Stop Setting].

NOTE

- **In the table of <Imaging unit life value *4>, Normal and Suspend are words used in the jig software. The words, Normal and Long, are used in the control panel.**
- ***5 describes the display used in the jig software. When using the control panel, the screen display is [Service Mode] → [System Settings] → [IU Yield Setting].**

*6: The count condition is different according to the paper length of the sub scanning direction.

Paper length of sub scanning direction	Count value
Less than 216 mm	1 count
216 mm to 432 mm	2 counts
432 mm to 648 mm	3 counts
648 mm to 864 mm	4 counts
over 864 mm	5 counts

6.4.2 Conditions for life specifications values

Item		Description
Job type		Monochrome : Making 4 prints per job Color : Making 4 prints per job
Paper size		A4 or 8 $^{1}/_{2}$ x 11
PV/M		Black: 7,400 / Color: 1,800
Original density (Coverage)	Color	5 % for each color
	Monochrome	K 5 %
Low power mode		OFF
No. of operating days per month		20 days (power switch turned ON and OFF 20 times per month)

6.4.3 Control causing inhibited printing for one part when an inhibited-printing event occurs in another part

- In order to reduce the maintenance call times: when printing prohibiting is reached for any of the following parts, make printing prohibited also for other parts whose life value is reached, and replace those parts at the same time.

Target parts: Fusing unit, image transfer belt unit, imaging unit /C, imaging unit /M, imaging unit /Y, imaging unit /K

6.5 Maintenance procedure (periodical check parts)

NOTE

- **The alcohol described in the cleaning procedure of maintenance represents the isopropyl alcohol.**

6.5.1 Cleaning of the electrostatic charger wire

A. Periodically cleaning parts/cycle

- Electrostatic charger wire: when toner cartridge K is replaced

B. Procedure

1. Open the front door.

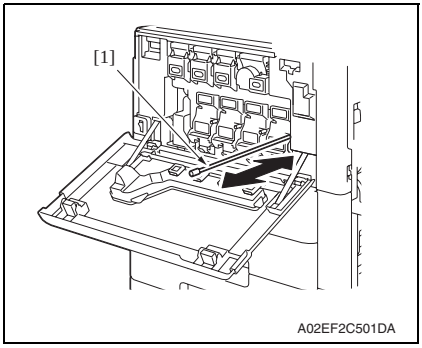

2. Slowly pull out the charger-cleaning tool [1] as far as possible.
Next, slowly push in the charger cleaning tool as far as possible.
Repeat the above operations three times.

NOTE

- **Move the charger-cleaning tool slowly all the way to the end of either way.**

6.5.2 Cleaning of the timing roller

A. Periodically cleaning parts/cycle

- Timing roller: Every 60,000 prints (upon each call)

B. Procedure

1. Open the right door.

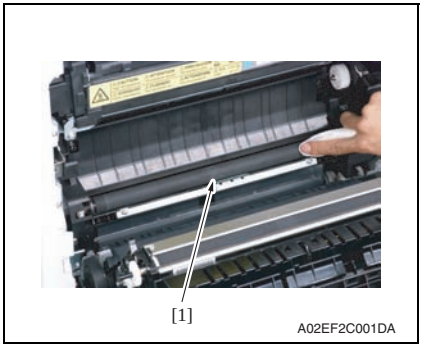

2. Using a cleaning pad with alcohol, wipe the timing roller [1] clean of dirt.

6.5.3 Cleaning of the area around the waste toner collecting port

A. Periodically cleaning parts/cycle

- Area around the waste toner collecting port: Every 60,000 prints (upon each call)

B. Procedure

1. Remove the waste toner box.
See P.32

A02EF2C294DA

2. Wipe the areas around the waste toner collecting port clean of spilled toner and dirt using a cleaning pad with water or alcohol.

6.5.4 Cleaning of the duplex transport rollers

A. Periodically cleaning parts/cycle

- Duplex transport rollers: Every 60,000 prints (upon each call)

B. Procedure

1. Open the duplex door.

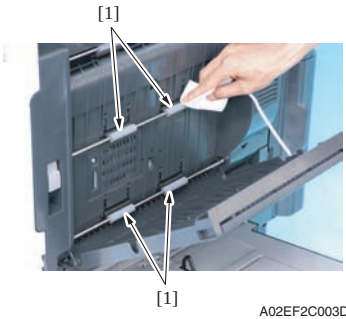

A02EF2C003DA

2. Using a cleaning pad with alcohol, wipe the transport rollers [1] clean of dirt.

6.5.5 Replacing the paper feed tray 1 feed roller/paper feed tray 1 pick-up roller

A. Periodically replacing parts/cycle

- Paper feed tray 1 feed roller: Every 300,000 prints
- Paper feed tray 1 pick-up roller: Every 300,000 prints

B. Procedure

1. Slide out the paper feed tray 1.
2. Remove the manual bypass tray unit.
See P.110

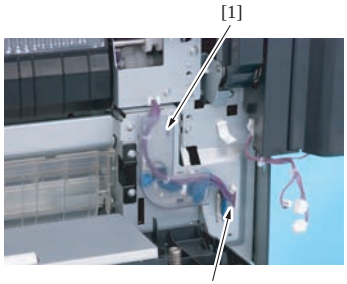

A02EF2C004DA

3. Remove the harness cover [1], and disconnect the connector [2].

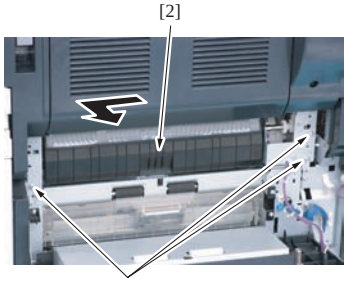

A02EF2C005DA

4. Remove three screws [1], and remove the paper feed tray 1 paper feed assy [2].

NOTE

- **The paper feed tray 1 paper feed assy is positioned by the shaft that passes through the back frame of the assy.**
  When removing the paper feed tray 1 paper feed assy, slide it in the direction of the arrow.

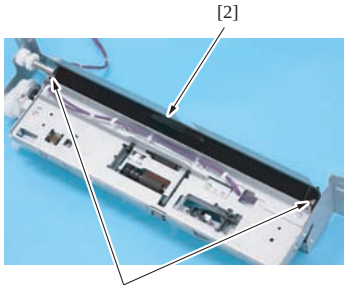

A02EF2C006DA

5. Remove two springs [1], and remove the cover [2].

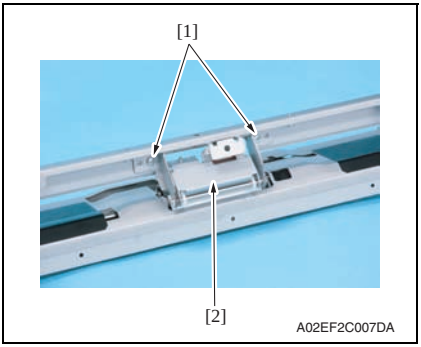

6. Remove two screws [1], and remove the paper feed tray 1 separation roller assy [2].

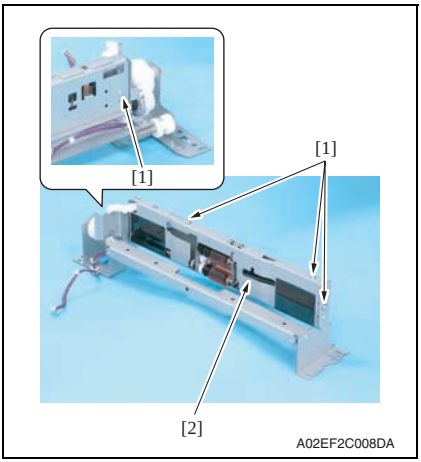

7. Remove four screws [1], and remove the paper feed tray 1 feed roller cover [2].

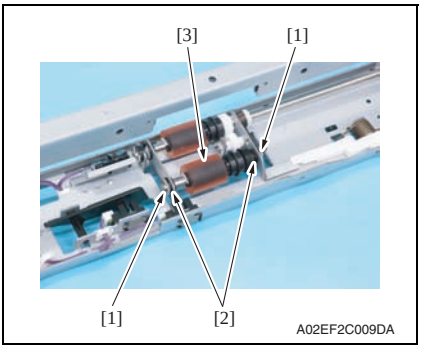

8. Remove two C-clips [1] and two bearings [2], and remove the paper feed tray 1 pick-up roller assy [3].

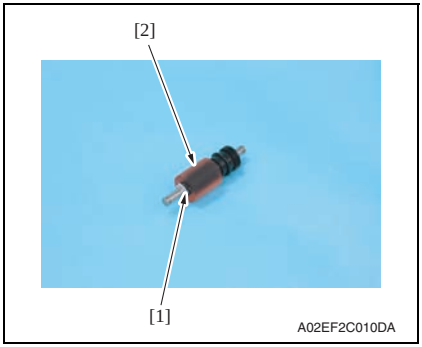

9. Remove the C-clip [1], and remove the paper feed tray 1 pick-up roller [2].

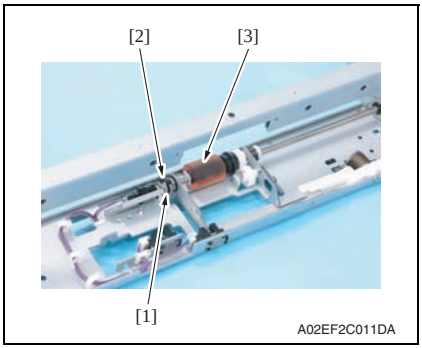

10. Remove the C-clip [1] and the bearing [2].
Slide the paper feed tray 1 feed roller assy [3].

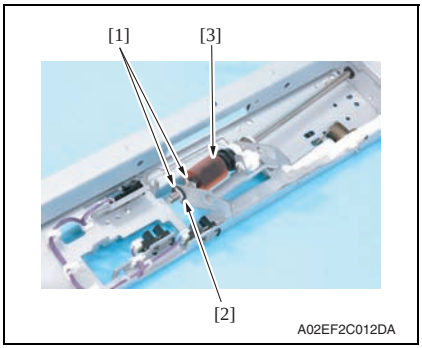

11. Remove two C-clips [1] and the bearing [2], and remove the paper feed tray 1 feed roller [3].

12. To reinstall, reverse the order of removal.

13. Replace the paper feed tray 1 separation roller assy.
See P.24

14. After selecting [Service Mode] → [Clear Counter] → [Yield Counter] → [Tray 1] → [Start], press the Menu/Select key to clear the counter value.
See P.351

6.5.6 Replacing the paper feed tray 1 separation roller assy

A. Periodically replacing parts/cycle

- Paper feed tray 1 separation roller assy: Every 300,000 prints

B. Procedure

1. Slide out the paper feed tray 1.
2. Remove the manual bypass tray unit.
See P.110
3. Remove the paper feed tray 1 separation roller assy.
See the replacement procedures 1 to 6 in “paper feed tray 1 feed roller/paper feed tray 1 pick-up roller.”
See P.21

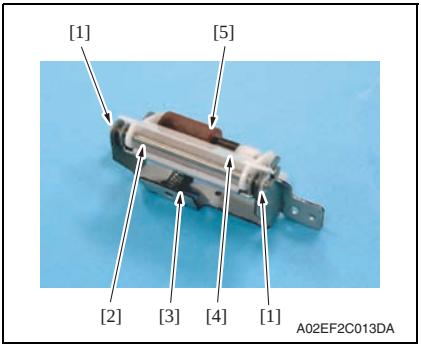

4. Remove two C-clips [1], the shaft [2], spring [3], and guide [4].
Remove the separation roller fixing plate assy [5].

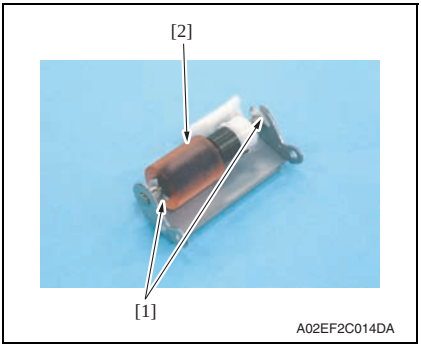

5. Remove two C-clips [1], and remove the paper feed tray 1 separation roller assy [2].

6. To reinstall, reverse the order of removal.

6.5.7 Replacing the paper feed tray 2 feed roller/paper feed tray 2 pick-up roller

A. Periodically replacing parts/cycle

- Paper feed tray 2 feed roller: Every 300,000 prints
- Paper feed tray 2 pick-up roller: Every 300,000 prints

B. Procedure

1. Slide out the paper feed tray 2.
2. Remove the vertical transport door.
See P.100
3. Remove the rear right cover/2.
See P.98

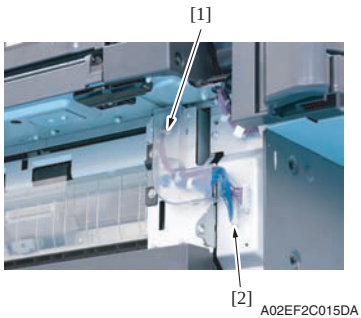

4. Remove the harness cover [1], and disconnect the connector [2].

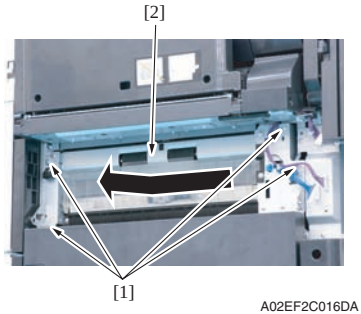

5. Remove four screws [1], and remove the paper feed tray 2 paper feed assy [2].

NOTE

- **The paper feed tray 2 paper feed assy is positioned by the shaft that passes through the back frame of the assy. When removing the paper feed tray 2 paper feed assy, slide it in the direction of the arrow.**

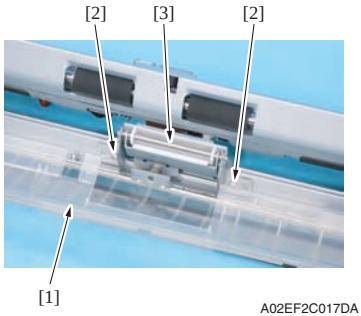

6. Lower the jam clearing cover [1], remove two screws [2], and remove the paper feed tray 2 separation roller assy [3].

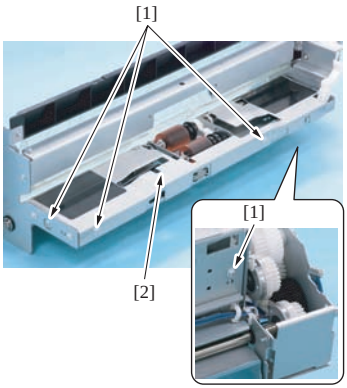

A02EF2C018DA

7. Remove four screws [1], and remove the paper feed tray 2 paper feed cover [2].

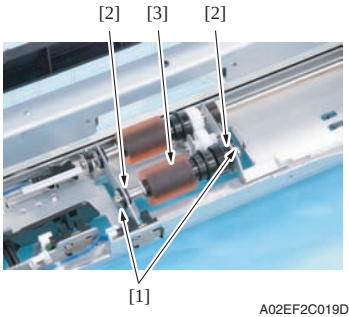

A02EF2C019DA

8. Remove two C-clips [1] and two bearings [2], and remove the paper feed tray 2 pick-up roller assy [3].

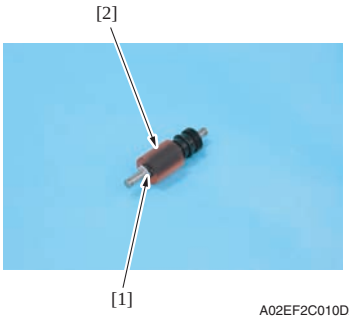

A02EF2C010DA

9. Remove the C-clip [1], and remove the paper feed tray 2 pick-up roller [2].

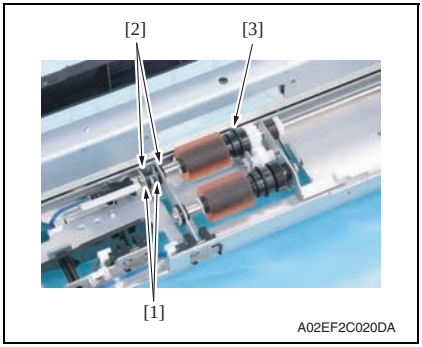

10. Remove two C-clips [1] and two bearings [2]. Slide the paper feed tray 2 feed roller [3] in the direction of the arrow.

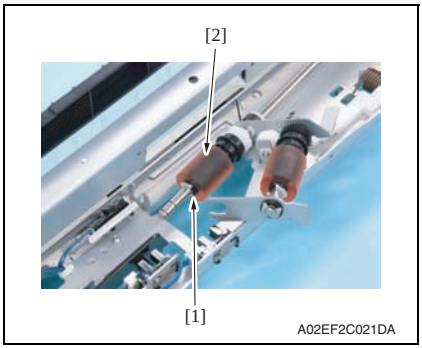

11. Remove the C-clip [1], and remove the paper feed tray 2 feed roller [2].

12. To reinstall, reverse the order of removal.

13. Replace the paper feed tray 2 separation roller assy.
See P.28

14. After selecting [Service Mode] → [Clear Counter] → [Yield Counter] → [Tray 2] → [Start], press the Menu/Select key to clear the counter value.
See P.351

6.5.8 Replacing the paper feed tray 2 separation roller assy

A. Periodically replacing parts/cycle

- Paper feed tray 2 separation roller assy: Every 300,000 prints

B. Procedure

1. Slide out the paper feed tray 2.
2. Open the vertical transport door.

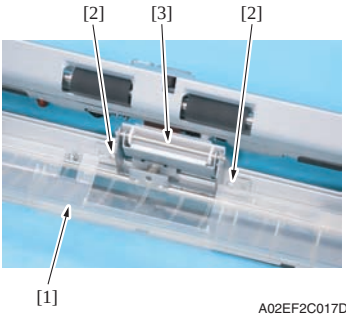

3. Opening the jam clearing cover [1], remove two screws [2], and remove the paper feed tray 2 separation roller assy [3].

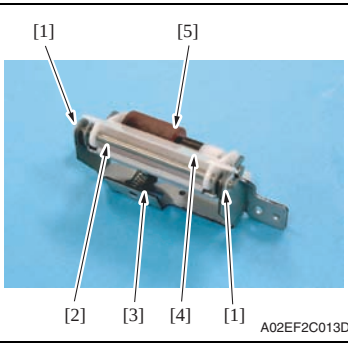

4. Remove two C-clips [1], the shaft [2], spring [3], and cover [4].
   Remove the separation roller fixing plate assy [5].

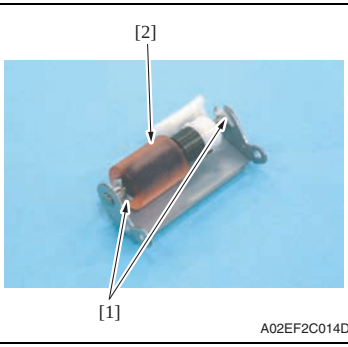

5. Remove two C-clips [1], and remove the paper feed tray 2 separation roller assy [2].

6. To reinstall, reverse the order of removal.

6.5.9 Replacing the manual bypass tray feed roller

A. Periodically replacing parts/cycle

- Manual bypass tray feed roller: Every 200,000 prints

B. Procedure

1. Remove the manual bypass tray unit.
See P.110

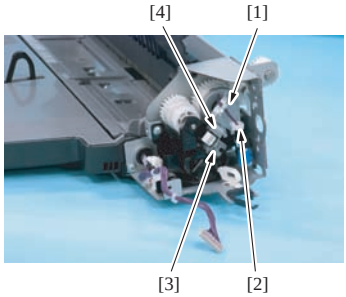

A02EF2C192DA

2. Remove the harness from the edge cover [1], and remove the wire saddle [2] and the screw [3].
3. Remove the metal plate [4].

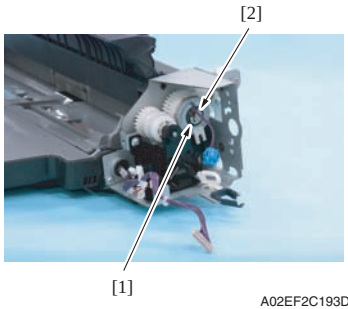

A02EF2C193DA

4. Remove the E-ring [1], and remove the manual paper feed clutch [2].

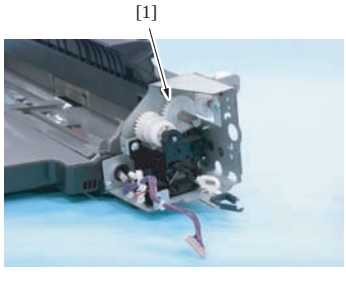

A02EF2C022DA

5. Remove the gear [1].

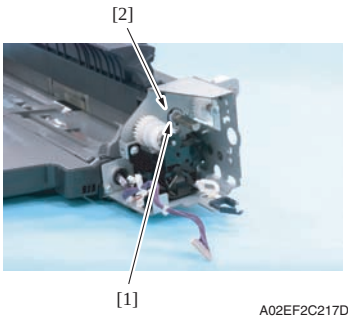

6. Remove the C-clip [1] and the bearing [2].

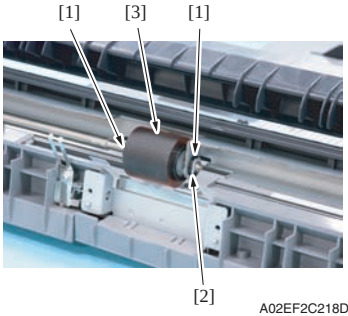

7. Remove two C-clips [1] and the bearing [2], and remove the manual bypass tray feed roller [3].

8. To reinstall, reverse the order of removal.
9. Replace the manual bypass tray separation roller assy.
See P.31
10. After selecting [Service Mode] → [Clear Counter] → [Yield Counter] → [Bypass] → [Start], press the Menu/Select key to clear the counter value.
See P.351

6.5.10 Replacing the manual bypass tray separation roller assy

A. Periodically replacing parts/cycle

- Manual bypass tray separation roller assy: Every 200,000 prints

B. Procedure

1. Remove the manual bypass tray unit.
See P.110

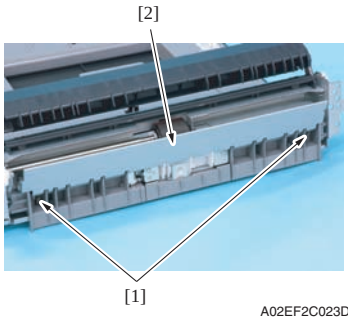

2. Remove two springs [1] and the guide plate [2].

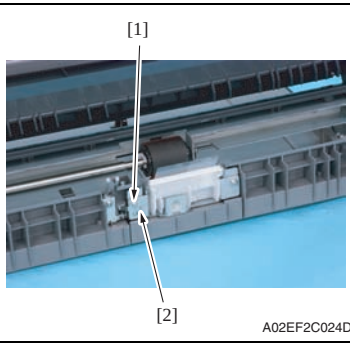

3. Remove the screw [1], and remove the ground terminal [2].

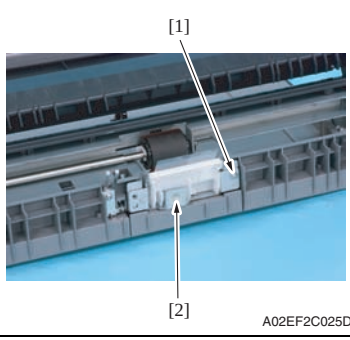

4. Remove the screw [1], and remove the manual bypass tray separation roller assy [2].

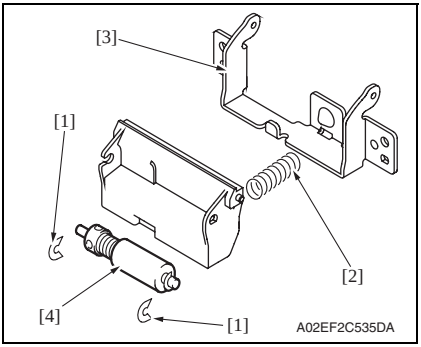

5. Snap off two C-clips [1], and remove the spring [2] and the guide plate [3]. Remove the manual bypass tray separation roller assy [4].

6. To reinstall, reverse the order of removal.

6.5.11 Replacing the waste toner box

A. Periodically replacing parts/cycle

- Waste toner box: Every 50,000 prints

B. Removal procedure

1. Open the front door.

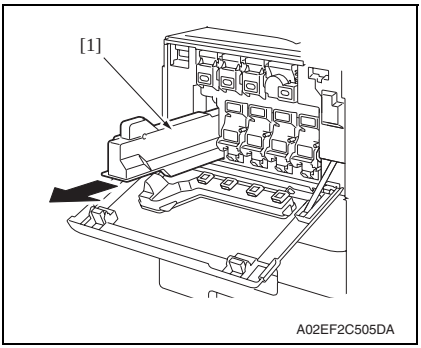

2. Raise the waste toner box [1] and remove it.

3. Clean the surface around the waste toner collecting port.
See P.20

C. Reinstall procedure

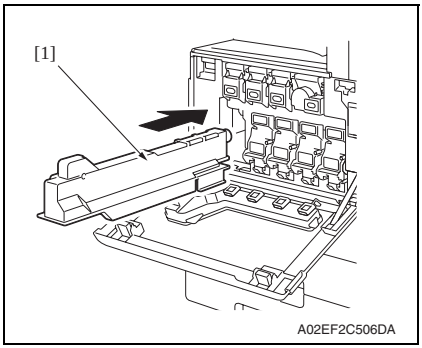

1. Remove a new waste toner box from its packaging and remove the packing material.
2. Place the waste toner box [1] in position.

3. Close the front door.

6.5.12 Replacing the transfer roller unit

A. Periodically replacing parts/cycle

- Transfer roller unit: Every 150,000 prints

B. Removal procedure

1. Open the right door.

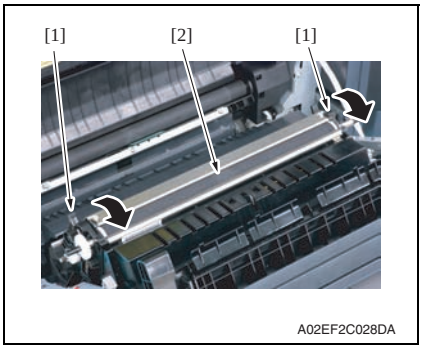

2. Unlock the lock levers [1] of the transfer roller unit (at two places).
3. Holding onto the lock levers [1] (at two places), remove the transfer roller unit [2].

C. Reinstall procedure

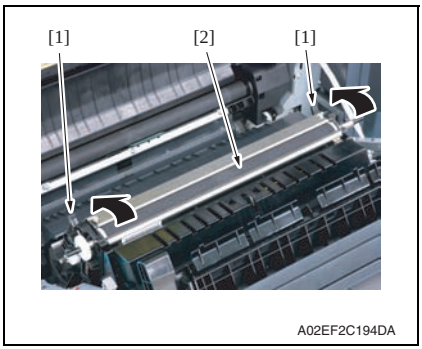

1. Holding onto the lock levers [1] (at two places), mount the new transfer roller unit [2].
2. Lock the lock levers [1] (at two places).

NOTE

- **Make sure that the levers are locked in position both at front and rear.**

3. Close the right door.

6.5.13 Replacing the imaging unit

A. Periodically replacing parts/cycle

- Imaging unit Y,M,C : Every 90,000 prints
- Imaging unit K : Every 120,000 prints

NOTE

- **Although the procedure shown below is for the replacement of the imaging unit K, use the same procedure to replace other imaging units Y,M,C.**

B. Removal procedure

1. Open the front door.

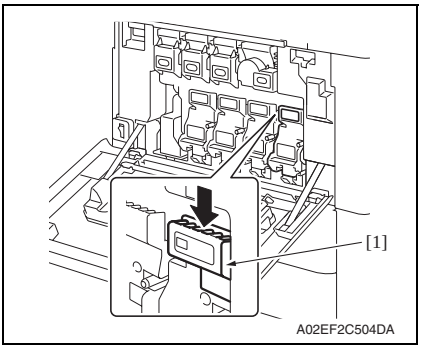

2. Press down to release the unlock lever [1] of the imaging unit to be replaced.

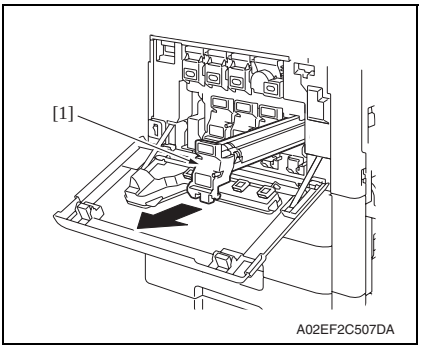

3. Remove the imaging unit [1].

C. Reinstall procedure

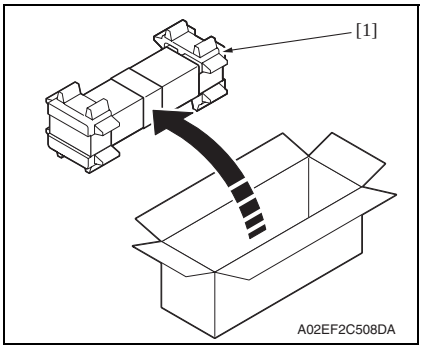

1. Remove the imaging unit [1] from its packaging.

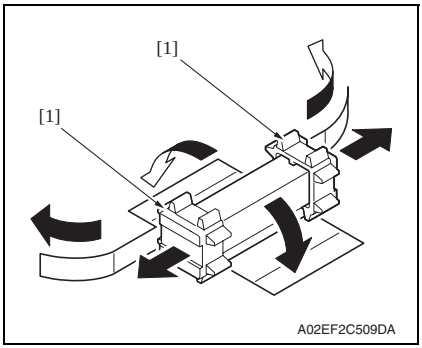

2. Peel off the tapes, and then remove the packing materials [1].

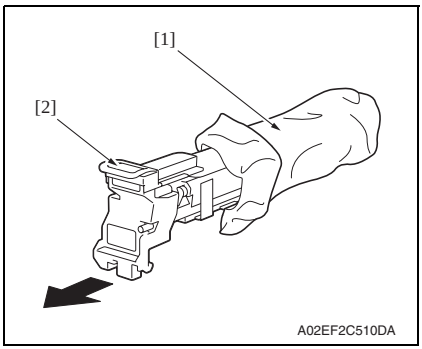

3. Remove the imaging unit [2] from the black protective bag [1].

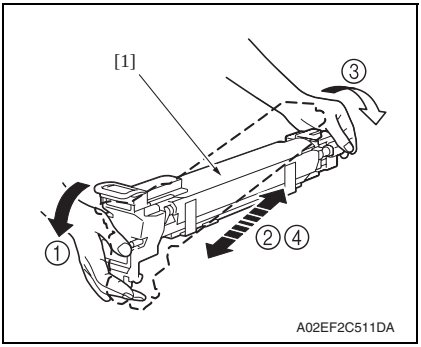

4. Tilt the imaging unit [1] to the left and shake it a little left to right twice. Then, tilt the imaging unit to the right and shake it a little right to left twice.

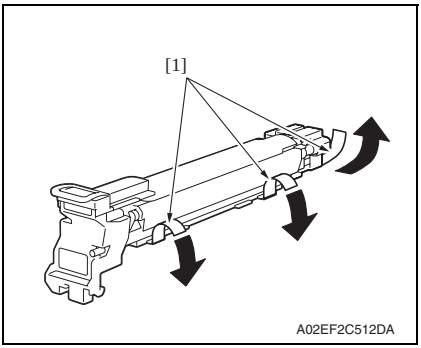

5. Peel off the tapes [1].

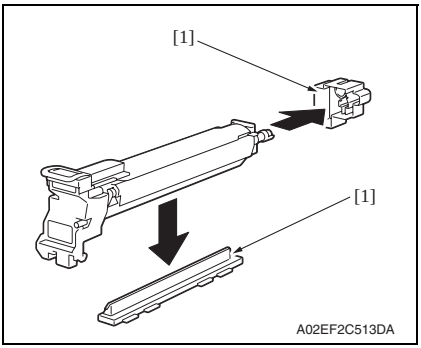

6. Remove the packing material and securing material [1].

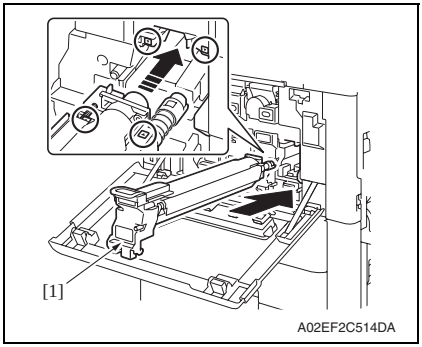

7. Align the ▲ mark on the imaging unit with the ▼ mark on the main body. Install the imaging unit [1] into the main body.

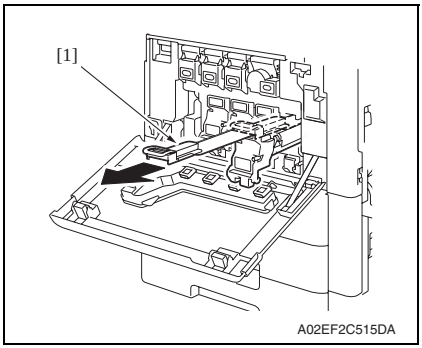

8. To remove the protective sheet [1] which guards against PC drum damage, slowly pull its tab.

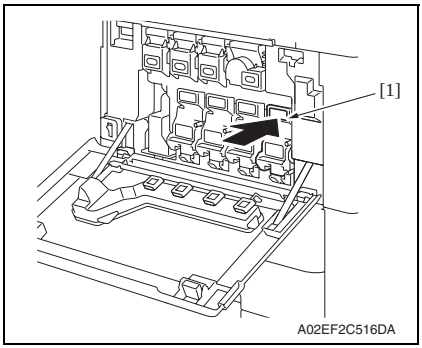

9. Insert the imaging unit [1] completely and close the front door.

6.5.14 Replacing the ozone filter

A. Periodically replacing parts/cycle

- Ozone filter: Every 150,000 prints

B. Procedure

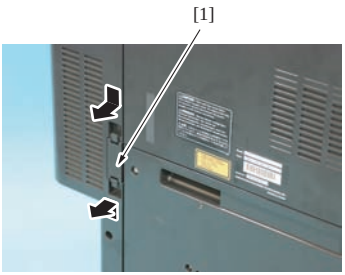

A02EF2C026DA

1. Grip the handle on the ozone filter [1] and slide it out of the main body.

6.5.15 Replacing the toner cartridge

A. Periodically replacing parts/cycle

- Toner cartridge Y,M,C : Every 20,000 prints
- Toner cartridge K : Every 26,000 prints

B. Removal procedure

1. Open the front door.

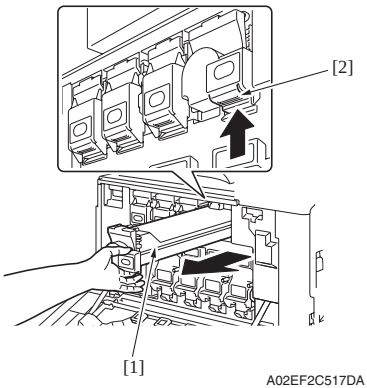

A02EF2C517DA

2. Pull up the locking tab [2] of the empty toner cartridge [1] to unlock it.

3. Pull out the toner cartridge [1] as far as possible, and then pull it up to remove it.

C. Reinstall procedure

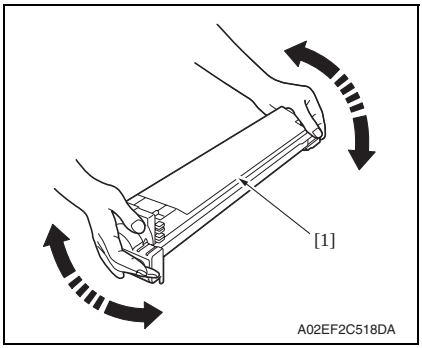

1. Remove the new toner cartridge [1] from its packaging, and then shake the cartridge up and down 5 to 10 times.

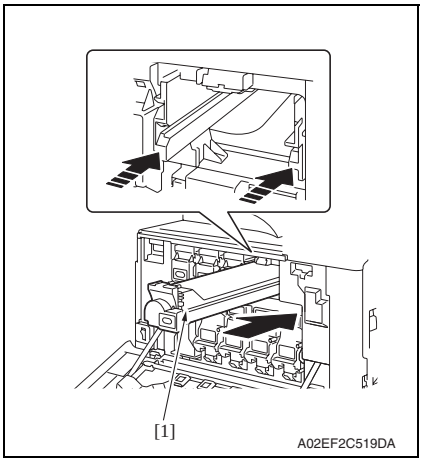

2. Align the toner cartridge [1] with the slots in the machine, and then insert the cartridge until the locking tab locks into place.

3. Clean the electrostatic charger wire.
See P.19

6.5.16 Replacing the transfer belt unit

A. Periodically replacing parts/cycle

- Transfer belt unit: Every 150,000 prints

B. Removal procedure

1. Remove all toner cartridges.
   See toner cartridge replacement/removal procedure steps 1 through 3.
   See P.38
2. Remove all imaging units.
   See imaging unit replacement/removal procedure steps 1 through 3.
   See P.34
3. Open the right door.

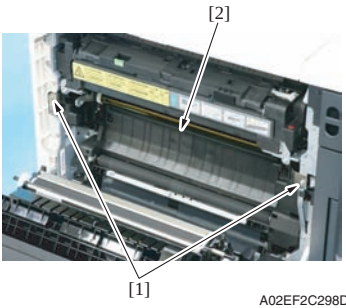

4. Remove two screws [1] and release the lock of the transfer belt unit [2].

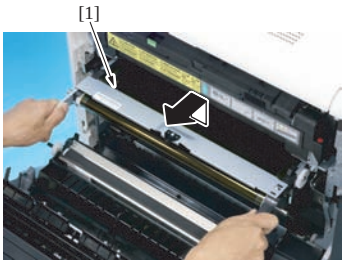

5. Hold the both sides and lift it to take out the transfer belt unit [1] a little.

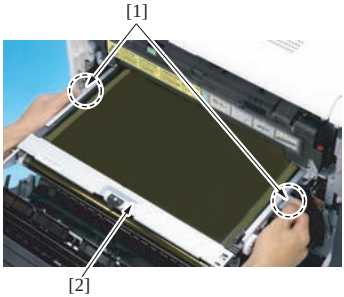

6. Hold the position [1] as shown in the left and remove the transfer belt unit [2].

NOTE

- **Do not touch the surface of the Image transfer belt unit.**
- **Cover the image transfer belt unit with something such shade cloth to protect its surface from dust or foreign matter.**

C. Reinstall procedure

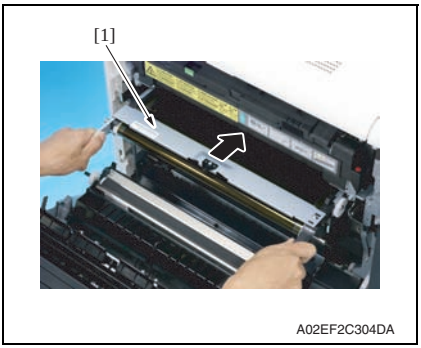

1. Insert the transfer belt unit [1].

NOTE

- **Insert the transfer belt unit with care not to allow its docking gear to be damaged by hitting it against the rail or associated part.**
- **Do not touch the surface of the image transfer belt unit.**
- **Cover the image transfer belt unit with something such shade cloth to protect its surface from dust or foreign matter.**

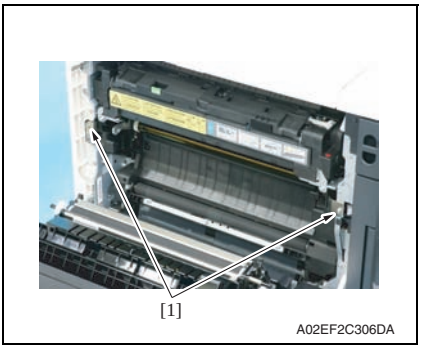

2. Install the transfer belt unit with two screws [1].

NOTE

- **Replace the ozone filter, which is supplied with the transfer belt unit, at the same time.**

3. Install the toner cartridges of all colors.

See toner cartridge replacement/installation procedure steps 1 and 2.
See P.38

4. Install the imaging units of all colors.

See imaging unit replacement/installation procedure steps 1 and 2.
See P.34

5. Close the right door.

6. Turn ON the power switch.

7. Start the jig software, select [Service Mode] → [Imaging Process Adjustment] → [X-Rite Calibration], and carry out the gradation adjust.
See P.317

NOTE

- **When customer needs high-quality color printing, performing calibration with X-Rite is recommended instead of the gradation adjust in step 7.**

6.5.17 Cleaning of the image transfer entrance guide

A. Periodically cleaning parts/cycle

- Image transfer entrance guide: When the transfer belt unit is replaced (every 150,000 print)

B. Procedure

1. Remove the transfer belt unit.
See P.40

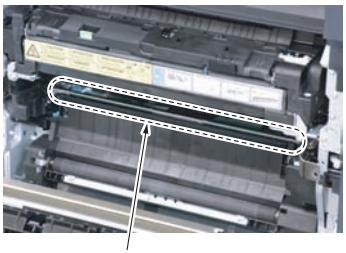

2. Wipe the image transfer entrance guide [1] clean of spilled toner and dirt using a cleaning pad with water or alcohol.

6.5.18 Cleaning of the IDC/registration sensor/MK,YC

A. Periodically cleaning parts/cycle

- IDC/registration sensor/MK,YC: When the transfer belt unit is replaced (every 150,000 print)

B. Procedure

1. Remove the transfer belt unit.
See P.40

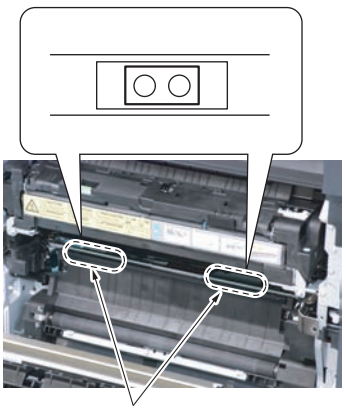

2. Wipe the surface of the IDC/registration sensor/MK,YC [1] clean of spilled toner and dirt using a cotton bud.

6.5.19 Replacing the fusing unit

⚠ CAUTION

- **The temperature gets high in the vicinity of the fusing unit. You may get burned when you come into contact with the area. Before replacement operations, make sure that more than 20 minutes have elapsed since the power switch were turned off.**

A. Periodically replacing parts/cycle

- Fusing unit: Every 400,000 prints

B. Procedure

1. Open the front door.
2. Open the right door.

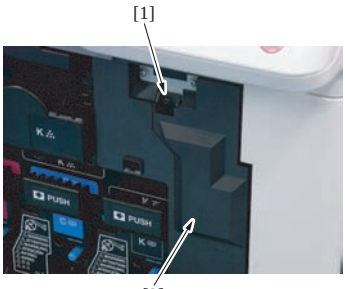

A02EF2C308DA

3. Remove the screw [1], and remove the connector protective cover [2].

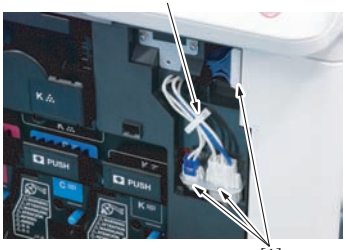

A02EF2C310DA

4. Disconnect three connectors [1].
5. Remove the harness from the wire saddle [2].

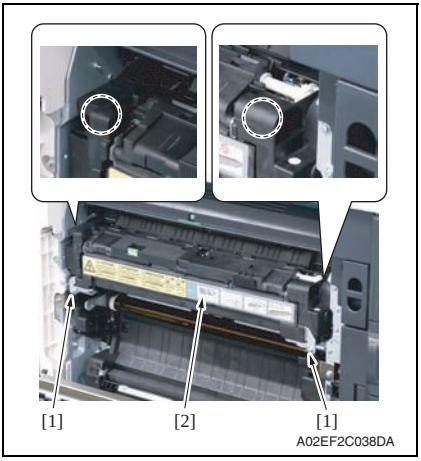

6. Remove two screws [1], and remove the fusing unit [2].

NOTE

- **When removing the fusing unit, hold the parts shown on the picture on the left so that it would not fall.**

7. Service tool

7.1 Service material list

Name	Shape	Material No.	Remarks
Cleaning pad	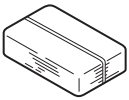 A02EF2C526DA	000V-18-1	10pcs/1pack
Isopropyl alcohol	A00KF2C506DA	—	
Molykote EM-50L grease	A00KF2C507DA	4478 7801 ##	Used with FS-519

7.2 CE tool list

Tool name	Shape	Quantity	Parts No.	Remarks
PH window cleaning jig	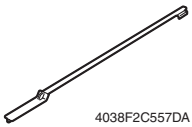 4038F2C557DA	1	4038 2083 ##	
PH window cleaning jig pad	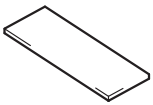 4038F2C558DA	1	4038 2084 ##	
Compact flash	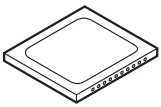 4037F2C601DA	1	V865400001 (blank)	*1

*1: Inquire of KMBT about the part number of compact flash in which the firmware data is written.

7.3 Print materials

7.3.1 Imaging unit single parts (IU)

Parts name	Replacing period
Imaging unit K	120,000 prints
Imaging unit Y	90,000 prints
Imaging unit M	90,000 prints
Imaging unit C	90,000 prints

See P.17

7.3.2 Toner cartridge single parts (T/C)

Parts name	Replacing period
Toner cartridge K	26,000 prints
Toner cartridge Y	20,000 prints
Toner cartridge M	20,000 prints
Toner cartridge C	20,000 prints

*1: Life value that can be achieved with a probability of 90% even with product-to-product variations and fluctuating operating environmental conditions taken into consideration, when the T/C is used under the conditions of B/W ratio 5% for each color

7.3.3 Waste toner box

Parts name	Replacing period *1
Waste toner box	50,000 prints *1

*1: A waste toner full condition is detected with detecting the actual waste toner emissions.

See P.17

7.3.4 Maintenance kit

There is no setting for the maintenance kit.

8. Service jig

8.1 Construction of the service jig

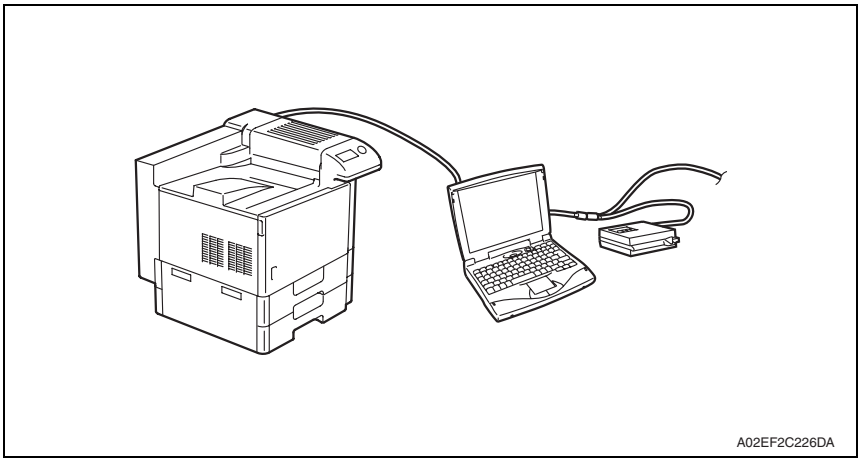

Name	Description	Remark
Notebook PC	• Starts the external panel controller for adjustment.	Commercially available product
Jig software *1 (External Panel Controller)	• Allows settings, adjustments, and checks to be made for the printer using a PC.	Supplied from KMBT
Network cable (straight cable)	• Connects between the notebook PC and the printer.	Commercially available product
X-Rite (DTP32)	• Color tone tester.	Commercially available product
Cross-cable (DTP32)	• Connects the PC to X-Rite.	Commercially available product

NOTE

- **When customer needs high-quality color printing, performing calibration with X-Rite is recommended.**

*1: The recommended OS of the operating environment for the external panel control is Windows 98, Windows 2000, or Windows XP. No other OSs are guaranteed for correct operation. Another requirement is that the PC is capable of serial communications at 19,200 bps.

8.2 Connecting the equipment cables

8.2.1 Connection between X-Rite and the PC

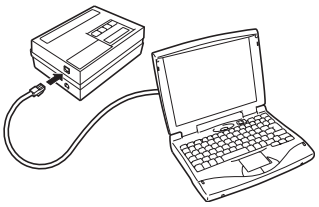

A02EF2C227DA

1. Connect X-Rite to the PC with a crossover cable for DTP32.

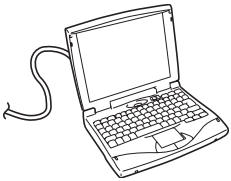

A02EF2C228DA

2. Connect the PC to the printer with a network cable.

NOTE

- **The network cable must be a straight-through cable.**

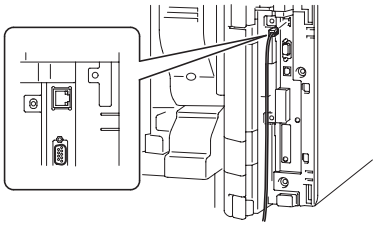

A02EF2C229DA

8.2.2 Starting the PC and the printer

NOTE:

- **The notebook PC should be started up, and the printer should be turned on before the External Panel Controller is started up.**
- **If an error message appears, follow the instructions described in the message.**
- **Do not quit the External Panel Controller while it is being used. If it is quit, restart the machine and the External Panel Controller.**

1. Turn on the machine.
2. Press the Menu/Select key.
3. Press the ▼ key to select “Service Mode.”
4. Press the Menu/Select key.
5. Input the password, and press the Menu/Select key.
6. Check that “System Settings” is selected and press the Menu/Select key.
7. Press the ▼ key to select “SoftwareSWSetting.”
8. Press the Menu/Select key.
9. Select Software-SW “62” and press the Menu/Select key.
10. Press the ▼ key to select “Set by Hex.”
11. Change the setting from “00” to “01” and press the Menu/Select key.
12. Press the Cancel key.
13. Turn off the machine.
14. While the printer remains OFF, turn ON the PC.
15. Check that the computer’s IP address and subnet mask are set as follow:
    IP address: 192.168.1.100
    Subnet mask: 255.255.255.0
16. Turn ON the power switch of the printer and start External Panel Controller on the PC.

NOTE:

- **It may take some time to start External Panel Controller.**

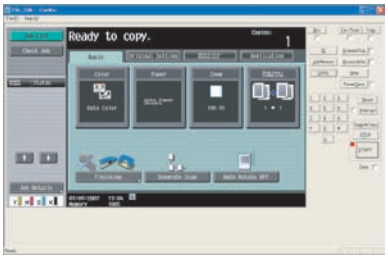

A02EF2C261DA

17. Check that the External Panel Controller appears in the computer screen.

NOTE:

- **If the External Panel Controller does not appear in the computer screen, turn the printer off, then on again, and then restart the External Panel Controller**

8.2.3 Service jig disconnection procedures

- After the jig software (external panel controller) has been used, the external application mode must be canceled (by setting HEX Assignment of software SW “62” to “00”).
- The following two procedures are available.

A. Disconnection procedure performed from the PC

1. Select [Service Mode] → [System 2] → [Software Switch Setting].
2. Click [Switch No.] and enter “62” with the ten-key pad.
3. Click [HEX Assignment] and enter “00” with the ten-key pad.
4. Click [Fix].
5. Disconnect the network cable and turn OFF and then turn ON the printer.

B. Disconnection procedure performed from the printer

1. Turn OFF the power switch of the printer.
2. Turn ON the power switch with the Menu/Select key held down.
3. Trouble reset screen will appear.
4. Select [Release Ext. APP], and press the Menu/Select key.

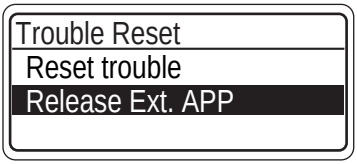

A02ES1E759DA

5. Following the instructions given on the screen, turn OFF and then turn ON the printer.
6. This automatically sets HEX Assignment of software SW “62” to “00” and the printer is started.
7. Disconnect the network cable.

9. Electrical/image adjustment

NOTE

- **Given in the following are only those adjustments that are made using the external panel controller.**
- **Ensure appropriate security for Service Mode setting procedures. They should never be known to any unauthorized person not involved with service jobs.**

9.1 Calling the Service Mode to screen

1. Connect the straight cable to the printer and PC.
2. Turn the PC power ON.
3. Turn the printer power ON.
4. Start the jig software and check the startup screen changes into the control panel screen.
5. Click the Utility key.
6. Click [Check Details].
7. Press the following keys in this order:
   Stop → 0 → 0 → Stop → 0 → 1
8. Service mode will be displayed.

9.2 List of functions

- Use the jig software and adjust or set on the PC screen.
- For adjustment items except X-Rite calibration, see Adjustment/Setting.

NOTE

- **When customer needs high-quality color printing, performing calibration with X-Rite is recommended.**

Machine	
• Change Warm Up Time	• Fusing Temperature
• Fusing Transport Speed	• Printer Area
• Printer Resist Loop	• Color Registration Adjustment
• Fusing Loop Size	• Lead Edge Erase Adjustment
• Manual Bypass Tray Adjustment *	
Imaging Process Adjustment	
• X-Rite Calibration (Gradation Adjust)	• Transfer Output Fine Adjustment
• D max Density	• Thick paper Density Adjustment
• Background Voltage Margin	• TCR Toner Supply
• Stabilizer	• Dev. Bias Choice
• Monochrome Density Adjustment	

9.2.1 X-Rite Calibration (Gradation Adjust)

1. Set up the service jig.
2. Call the Service Mode to the screen.

A02EF2E262DA

3. Click the X-Rite Calibration key in the imaging Process Adjustment screen.
4. Click the Gradation Mode.

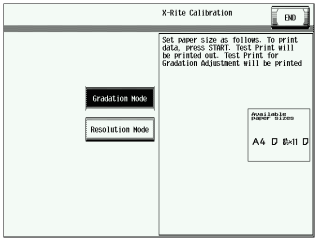

A02EF2E263DA

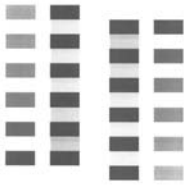

A02EF2C240DA

5. Check the message that appears, and then click the Start key in the external panel controller.
6. Test patterns are printed for the four colors. (Cyan, Magenta, Yellow, Black)

NOTE

- **It will take approximately 2 minutes for the test patterns to be printed.**
- **During printing, do not open the front door.**
  If the front door is opened, restart the procedure from step 1.

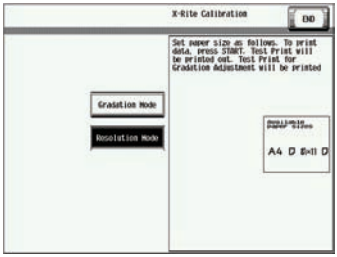

A02EF2E264DA

7. After the test patterns are printed, check that the message appears, and then click the Start key in the external panel controller.

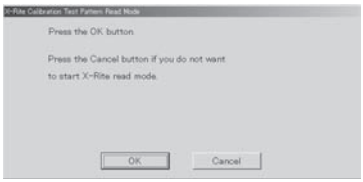

A02EF2E265DA

8. Then click “OK” in the dialog box.

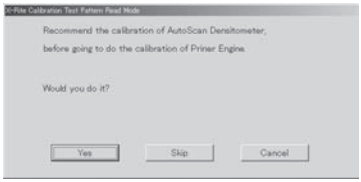

A02EF2E266DA

9. Check that the dialog box appears, and then click “Yes” in the dialog box.

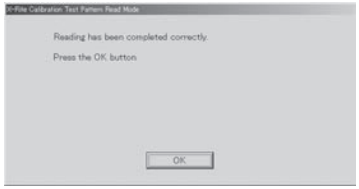

A02EF2E267DA

10. When the dialog box appears, the auto-cal strip can be read. Prepare the auto-cal strip.

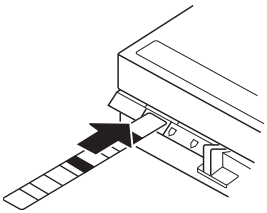

A02EF2C230DA

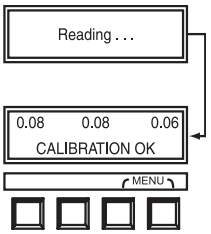

A02EF2C231DA

11. Insert the auto-cal strip into the X-Rite.

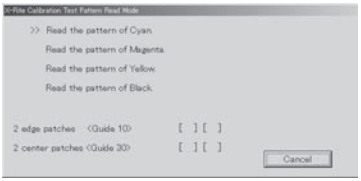

A02EF2E268DA

12. If the reading was completed correctly, the dialog box shown at the left appears.
13. Prepare the cyan test pattern.

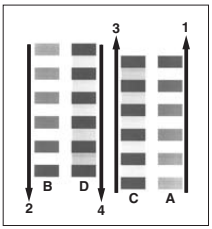

A02EF2C232DA

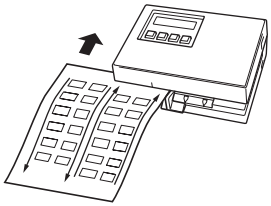

A02EF2C233DA

14. Set the X-Rite guide to “10.”
15. Feed the cyan test pattern in direction “1” to read the row represented by “A.”

NOTE

- **Align the test pattern with the guide, and insert the pattern into the X-Rite.**
- **The arrows indicate the direction that the pattern should be fed into the X-Rite.**
- **The arrows shown in the illustration are not printed on the actual test pattern.**

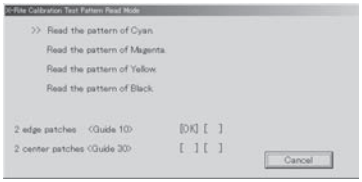

A02EF2E269DA

16. If the reading was completed correctly, “OK” is indicated.

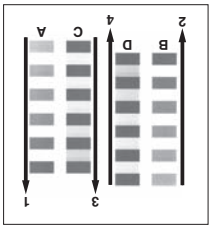

A02EF2C259DA

17. Turn the test pattern around, and then feed it to read the row indicated by “B” in direction “2.”

18. If the reading was completed correctly, a second “OK” is indicated.

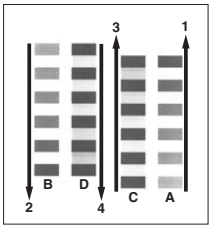

A02EF2C232DA

19. Set the X-Rite guide to “30.”

20. Turn the test pattern to its original orientation, and then feed the test pattern in direction “3” to read the row represented by “C.”

21. If the reading was completed correctly, a third “OK” is indicated.

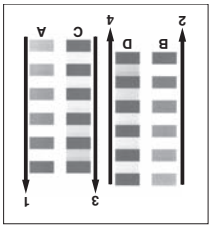

A02EF2C259DA

22. Turn the test pattern around, and then feed it to read the row indicated by "D" in direction "4."
23. If the reading was completed correctly, a fourth "OK" is indicated.

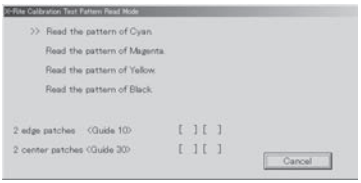

A02EF2E268DA

24. Check that ">>" appears beside "Read the pattern of Magenta."

NOTE

- **From here on, read the test patterns of magenta, yellow, and black, in that order.**
- **If ">>" appears beside "Read the pattern of Cyan.", perform the procedure for reading the cyan test pattern again.**

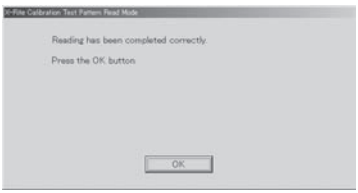

A02EF2E270DA

25. Check that the dialog box appears.
26. Then click "OK" in the dialog box.

A02EF2E274DA

27. Make sure that the Service Mode screen reappears on the screen.
28. Click “Exit”.

10. Firmware upgrade

10.1 Outline

- There are two ways to update the firmware: One is by directly connecting with the main body using the compact flash, and the other is by downloading over a network using the Internet ISW.

10.2 Preparations for firmware rewriting by Windows Command Prompt

10.2.1 Service environment

- OS: Windows 2000/XP
- Drive which enables writing/reading of compact flash
- Compact flash (service tool)

10.2.2 Writing into the compact flash

1. Put the data of firmware in the optional directory. (C:\bizhub in the below figure)

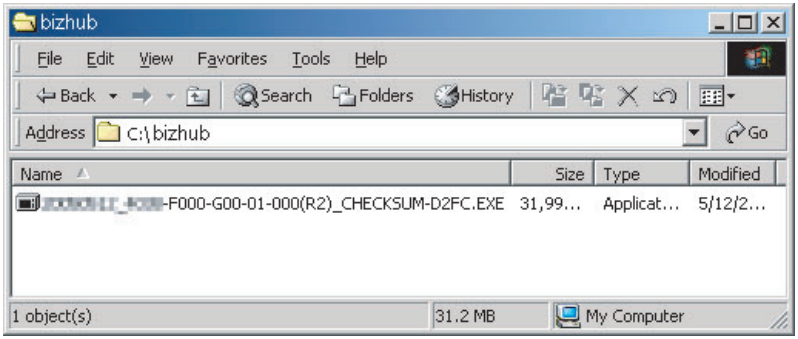

4038F2E562DB

NOTE

- **The file name of firmware data consists of the "Release Date_Version_ CHECKSUM-****.exe."**

2. Double-click the firmware data, and specify the directory to be uncompressed, and then uncompress it.

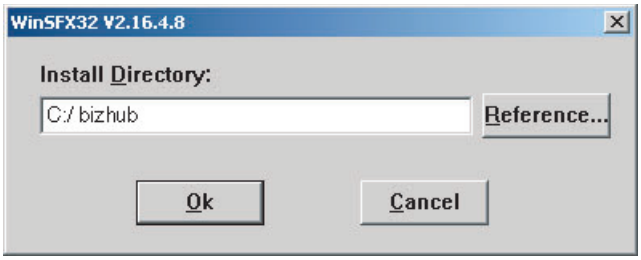

4038F2E563DB

NOTE

- **When old firmware is still left in the specified directory to be uncompressed, delete it before uncompressing.**
- **When the firmware data is decompressed, "card_work" folder is created in the selected directory and the data is decompressed in this folder.**

3. Mount the compact flash on the PC, and check the drive name, which was recognized in the Windows. (F-drive in the following figure)

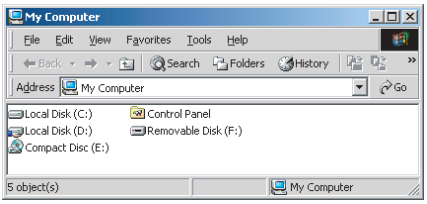

4036fs2623e0

4. Click [Start] → [Program] → [Accessories] → [Command Prompt] to open the command prompt.
5. Use the command prompt to move into the uncompressed directory.

6. Specify the drive of compact flash, which was recognized through the procedure 3, and execute the “mkcf.bat.” (Input the C: \bizhub\card_work>mkcf t1 f (drive number): in the below figure, and push the “Enter”.)

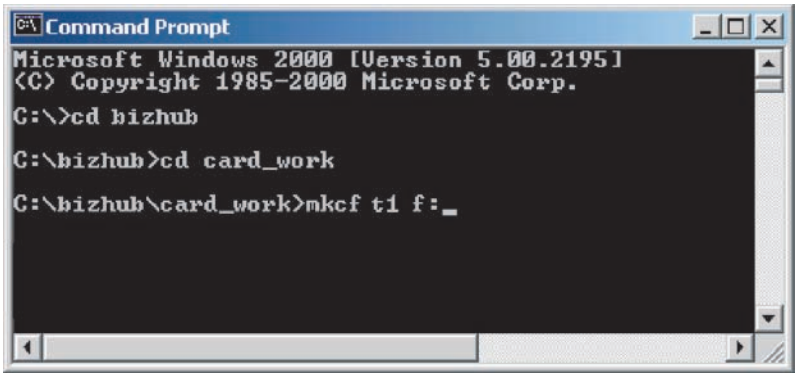

A02EF2E282DA

7. Once the “mkcf.bat” is executed, data writing into the compact flash is started.
8. Upon completion of writing, CHECKSUM is executed. If CHECKSUM value is precisely matched, “VERIFY OK” appears.

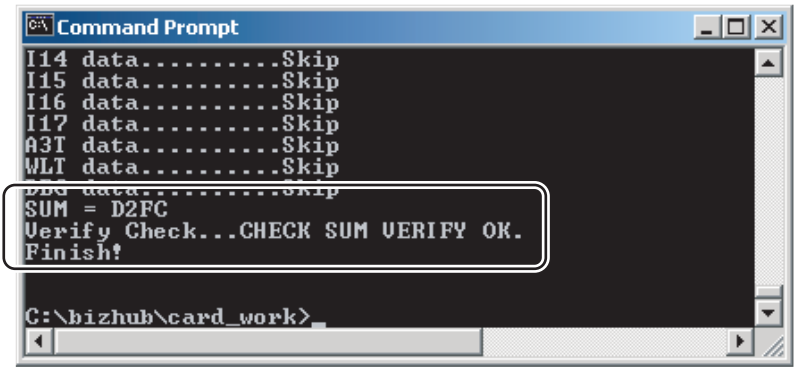

4038F2E565DB

9. Remove the compact flash from PC.

NOTE

- **When removing the compact flash, be sure to check if data is written as normal and then remove it according to the precise removing method.**

10.3 Preparations for firmware rewriting by Firmware Imaging Toolkit 2006

- This software is designed as the tool to write firmware data of MFP/printer released by KMBT into the compact flash card.

10.3.1 Correspond model

- Correspond models of the software is as follows.

Color machine	• bizhub C650/C550/C451/C450/C353/C352/C351/C350/C300/C253/C250/C203 • bizhub C450P/C353P/C352P/C250P
B/W machine	• bizhub 350/250/200 • Di3510/3510f/3010/3010f/2510/2510f

10.3.2 Function outline

- The following functions are available with this software.

Function type	Function name	Description
Basic functions	Write Firmware to a card	• Write firmware data into the compact flash card. See P.68
	Compare Firmware with a card	• Compare the firmware data written into the compact flash card with the one saved in PC. See P.68
Advanced functions	Create a Firmware Image from a card	• Create the firmware image form using the firmware data written into the compact flash card. See P.69
	Format a card	• Format the compact flash card by the FAT or vxWorks form. **NOTE** • **vxWorks form is not applicable** See P.69
	Display information about a card	• Acquisition the information of firmware data written into the compact flash card. See P.69

10.3.3 System environment

- The following system environments are required or recommended to use the software.

Computer	• IBM PC/AT compatible machine
CPU	• Pentium III / 500 MHz or higher is recommended.
Correspond OS	• Windows 2000, Windows XP or Windows Server 2003
Required memory	• More than 128 MB (Windows 2000), 256MB (Windows XP/2003) is recommended.
Others	• Drive that is able to Read/Write compact flash.

10.3.4 Installation of software

- Follow the procedures shown below to install the software.

NOTE

- **Install the software to the PC with the administration authentication.**
- **When any anti-virus program is activated, quite the program before the installation.**

1. Double click [setup.exe] to start the installation of the software.

9J06F2C673DA

2. Click [Next >].

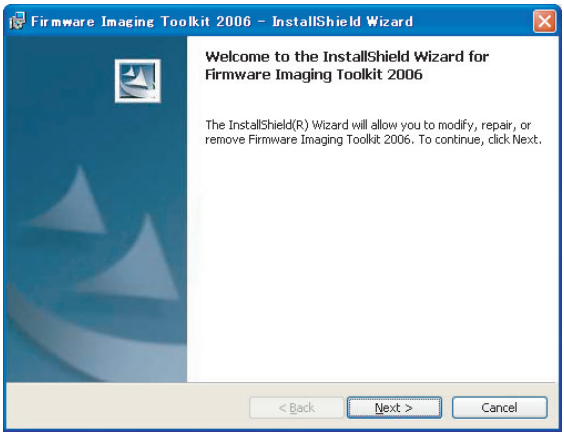

9J06F2E700DA

3. After checking the contents of license agreement, select [I accept the terms in the license agreement] and click [Next >].

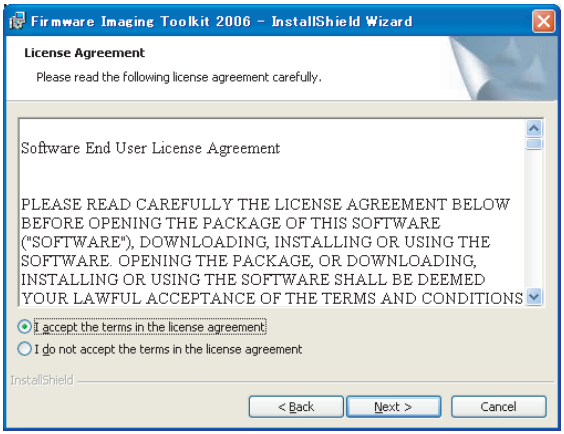

9J06F2E701DA

4. Select the installed destination folder of Firmware Imaging Toolkit 2006, and click [Next>].

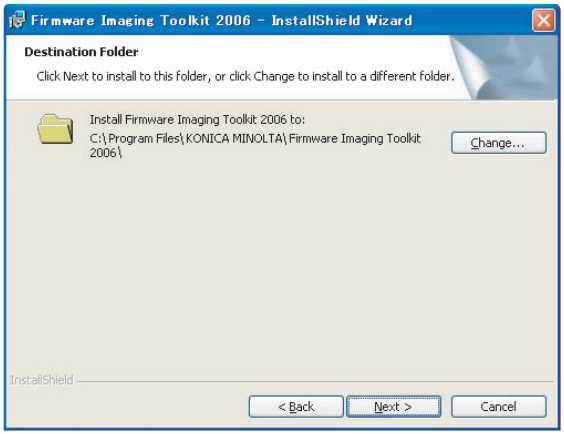

9J06F2E702DA

5. Click [Install] to start installation.
6. Click [Finish] to complete the installation.

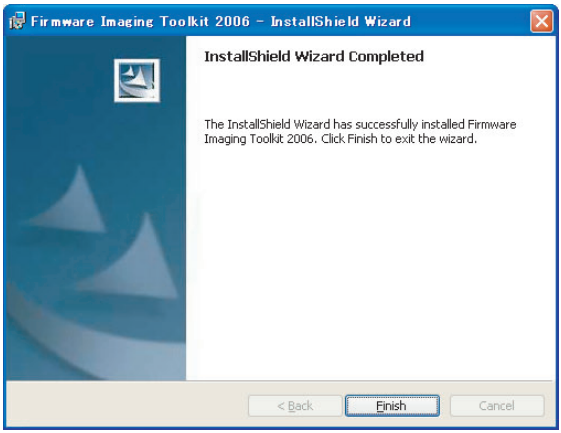

9J06F2E703DA

7. Shortcut file will be created inside Windows Start menu ([Program] → [KONICA MINOLTA] → [Firmware Imaging Toolkit 2006]).

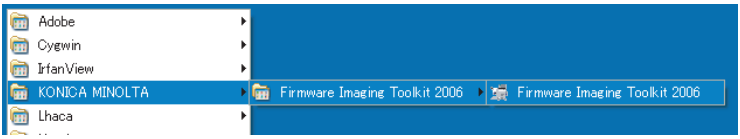

9J06F2E708DA

10.3.5 Update of software

- To update the software version, delete (uninstall) the currently installed program and install the new version.
- Follow the procedures shown below to delete (uninstall) the program.

1. Quite the program if the software is activated.
2. Select [Firmware Imaging Toolkit 2006] of [Add/Remove Programs] in Windows Control Panel menu to delete the program.

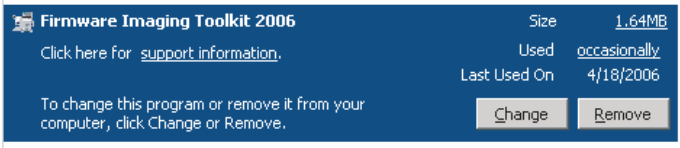

9J06F2E709DA

10.3.6 Screen

A. Main window

- The main window will be displayed after activating the software.
- Main window consists of 2 patterns: Basic mode, Advanced mode

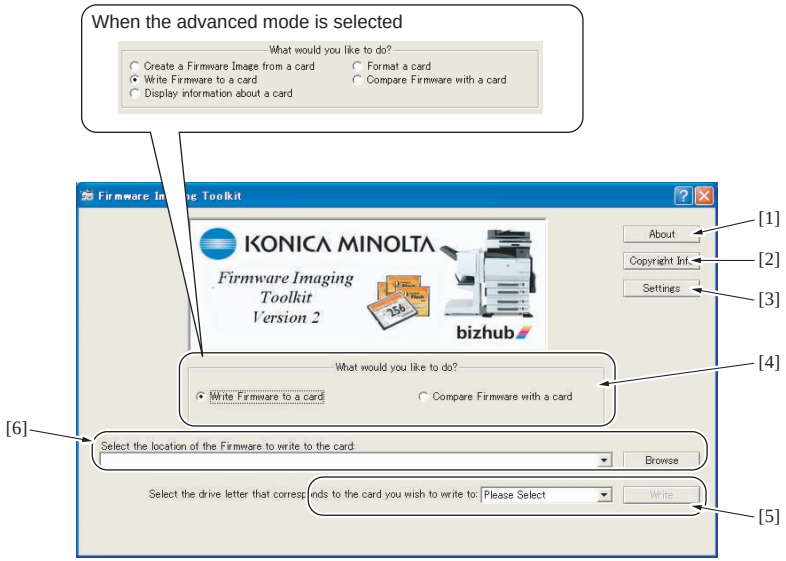

[1]	About	• To display the outline of the tool.
[2]	Copyright Info	• To display the license agreement and version information of the tool.
[3]	Settings	• To display the dialog to enable the advanced functions. • Select the check box of [Enabled Advanced Features] to enable advanced functions at main window. See P.67
[4]	What would you like to do?	• To select the function to be used. • Displayed screen is different between Basic mode and Advanced mode. See P.68
[5]	Select the location of the Firmware to write to the card:	• To select the compact flash drive to which the data to write.
[6]	Select the drive letter that corresponds to the card you wish to write to:	• To select the location where the firmware is stored in PC.

B. Settings dialog

- It will be displayed by clicking [Settings] at main window.
- Other settings will be enabled by selecting the check box of [Enabled Advanced Features].

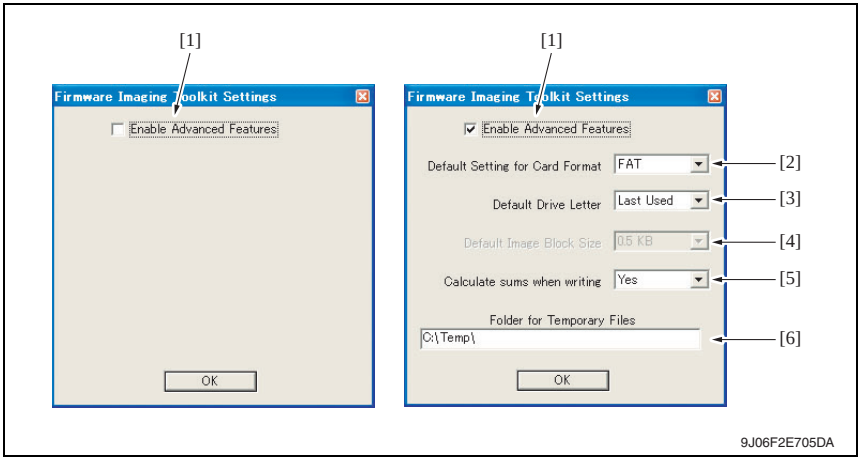

[1]	Enable Advanced Features	• Enable the setting of advanced functions at the dialog by selecting the check box. Also advanced functions can be selected at the main window.
[2]	Default Setting for Card Format	• Select the default card format during software starting. FAT : The format to be used by all models that the software supports. vxWorks : Not available yet.
[3]	Default Drive Letter	• Select how to set default of compact flash drive during software starting. LastUsed : The drive used at previous time is selected. None : [Please Select] is displayed on the screen every starting and the drive should be selected every time.
[4]	Default Image Block Size	• Not available yet.
[5]	Calculate sums when writing	• Set whether to calculate check sums during data writing. • If [YES] is selected, data consistency can be ensured by data verification of check sums during data writing. However, it takes more time for data writing compared to the case without sums calculation. (Basically this mode shall be selected.) • If [No] is selected, check sums calculation is skipped during data writing. Although it take less time for data writing compared to the case with sums calculation, it fails to ensure the reliability of the written data.
[6]	Folder for Temporary Files	• Set the folder for saving temporary files during the tool is activating. The temporary file is automatically deleted after the operation completes normally.

10.3.7 Details of each function

A. Basic functions

(1) Write Firmware to a card

- To write FW data into the compact flash. The FW data of the models shown below can be written.
- To write FW data into the compact flash. The FW data of the models shown below can be written.

<Corresponding models and firmware file type>

File type / Models	Indexed firmware type	Compressed firmware type	Uncompressed firmware type	Di3510/350/250/200 firmware type
C650	Mosel1_cf.tar.gz	*.img.gz	*.img	—
C550	Mosel2_cf.tar.gz			—
C451	Mosel3_cf.tar.gz			—
C353/C353P	thames1_cf.tar.gz			—
C253	thames2_cf.tar.gz			—
C203	thames25_cf.tar.gz			—
C450/C450P/C351	rhein1_cf.tar.gz			—
C352/C352P/C300	rhein2_cf.tar.gz			—
C350	tss2_cf.tar.gz			—
C250/C250P	rhein3_cf.tar.gz			—
Di3510/3510f/3010/3010f/2510/2510f	—	—	—	ma001
350/250/200	—	—	—	ma001a

NOTE

- **The above-mentioned [Indexed firmware type] and [Di3510/350/250/200 firmware type] shall be comprised of multiple files and one of the files shall be named as above.**
- **[Compressed firmware type] means the compressed formed image file that is created using the tool's function of the [Create a Firmware Image from a card].**
- **[Uncompressed firmware type] means the image file that is uncompressed the compressed firmware file.**
- **To write the image file data (*.img.gz or *.img) into the compact flash, use the compact flash with the same capacity as the one used for the original image file. Although the compact flash with larger capacity than the original one can be used, it is not covered under warranty.**
- **C350 firmware requires the compact flash over 64 MB.**
- **Firmware of C650/C550/C451/C450/C450P/C353/C353P/C352/C352P/C351/C300/C253/C250/C250P/C203 requires the compact flash over 128 MB.**

(2) Compare Firmware with a card

- Compare the firmware data written into the compact flash and the one (file) saved in PC.
- After the comparison, display the check sum information (comparison result dialog) of the firmware data of the compact flush and the file.
- The firmware data (file) format saved in PC shall consistent with the one written into the compact flash.

B. Advanced functions

(1) Create a Firmware Image from a card

- Create the image file from the firmware data written into the compact flash.
  Create the image file by dumping directly the data in the card. This function allows us to save the various type of firmware data in the compact flash as the image file and hold as print data.
- The created FW image file is automatically compressed and created as the Compressed firmware file (*.img.gz).
  The image file is written into the compact flash in the uncompressed form, however, the uncompressed data would occupy too much capacity, which makes file control difficult. Therefore this tool doesn't create uncompressed firmware file (*.img).

(2) Format a card

- Make format of the compact flash in FAT or vxWork form.
- To write the firmware data into the compact flash, the card should be formatted in FAT form to clear (initialize) the description of the compact flash.

NOTE

- **In current version, only FAT format is available but not vxWork format.**
- **After the firmware data is written into the compact flash, it becomes the own file style that is different from the FAT, and the compact flash that the firmware data is written cannot be browsed on the Windows OS.**

(3) Display information about a card

- Display the information of the firmware data written into the compact flash.
  The information to be displayed is according to the type of written FW data.
- For the series of Di3510/200/250/350 series, MSC version is displayed.
- For the series of C650/C550/C451/C450/C450P/C353/C353P/C352/C352P/C351/C350/C300/C253/C250/C250P/C203, check sums of each firmware data is displayed.

10.3.8 How to write firmware data

A. In the case of C650/C550/C451/C450/C450P/C353/C353P/C352/C352P/C351/C350/C300/C253/C250/C250P/C203 series

1. Put the firmware data in the optional directory. (C:\bizhub in the below figure)

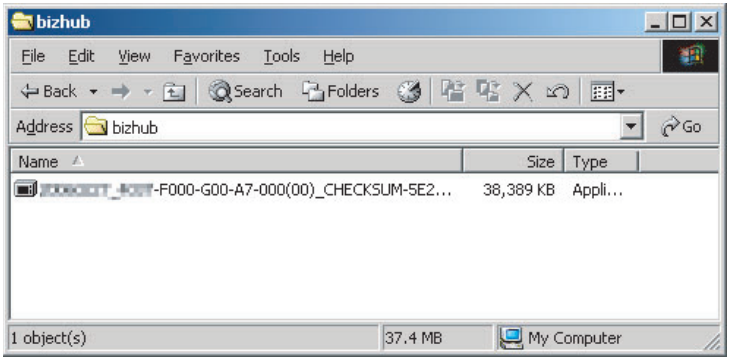

9J06F2E710DA

NOTE

- **The file name of firmware data consists of the "Release Date_Version_CHECKSUM-****.exe."**

2. Double-click the firmware data, and specify the directory to be uncompressed, and then uncompress it.

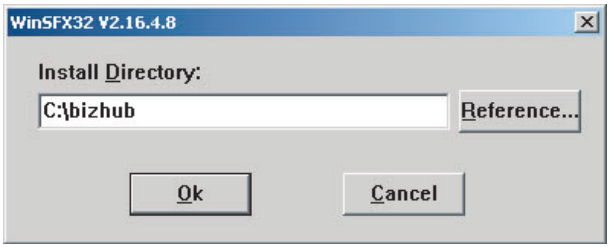

9J06F2E711DA

NOTE

- **When old firmware is still left in the specified directory to be uncompressed, delete it before uncompressing.**

3. Mount the compact flash on the PC, and check the drive name, which was recognized in the Windows. (F-drive in the following figure)

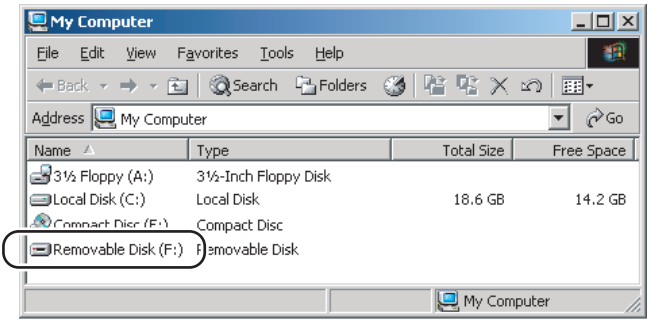

9J06F2E712DA

4. Start Firmware Imaging Toolkit 2006.

NOTE

- **When using the external compact flash drive such as USB be sure to connect them before starting this tool.**

5. Select the check box of [Write Firmware to a card].

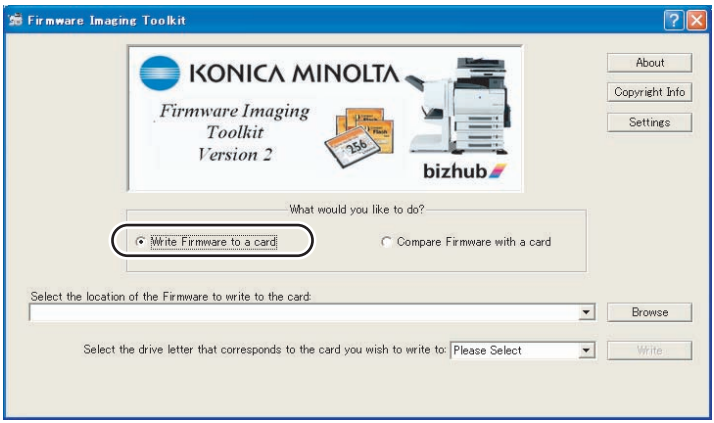

9J06F2E706DA

6. Click [Browse].

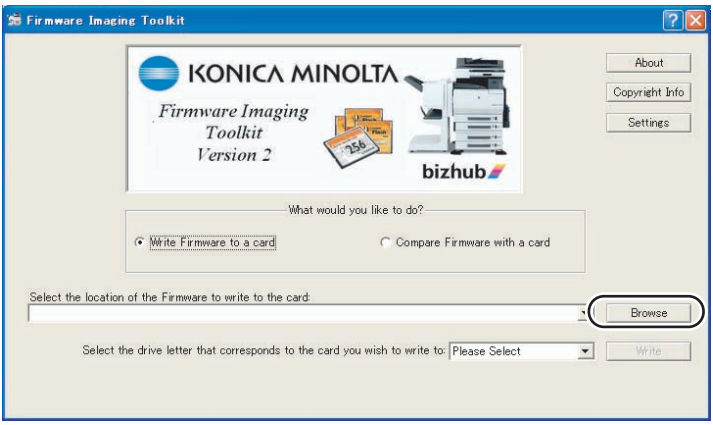

9J06F2E707DA

7. Select the file type [Indexed Firmware].

8. Move to the folder decompressed at step 2, confirm that only "###_cf.tar.gz" (### is for model name) is displayed, and select.

NOTE

- **If the file extension is set to be not displayed in Windows, the file name ".gz" will not be displayed.**

9. Click [Open].

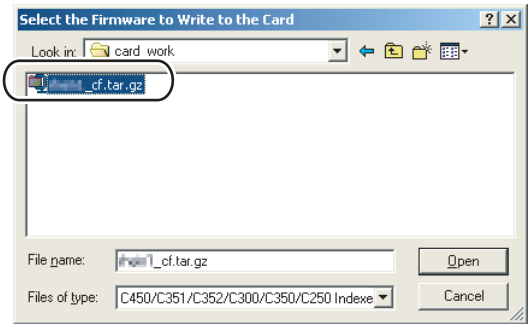

9J06F2E714DA

10. Select the drive that the compact flash is inserted, which is confirmed at step 3.

NOTE

- **The drives other than the compact flash that is recognized as "Removable Disk" can be selected for the writing destination. If these drives are selected mistakenly to make the writing, it may give fatal damage on Windows system or delete the saved data. Therefore pay close attention when selecting the drive.**

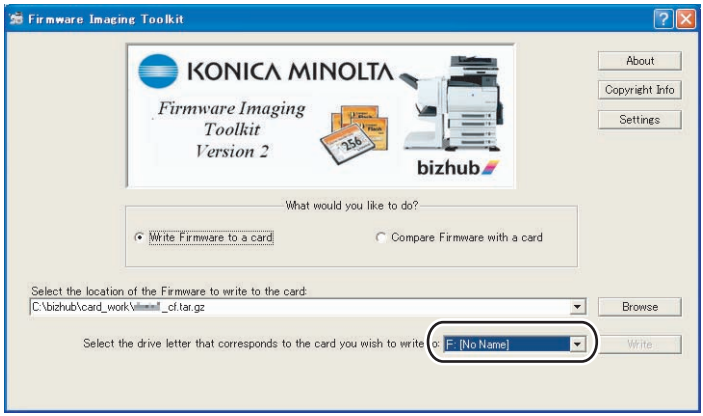

9J06F2E715DA

11. [Write] button is changed form gray into active status.
When clicking [Write] button, the following dialog is displayed.

12. In the dialog, re-confirm the firmware data and the written destination drive, and click [YES].
(If [NO] is clicked, the screen goes back of the main window.)

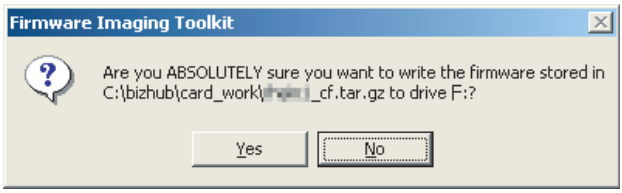

9J06F2E716DA

13. Click [Yes], and data writing starts.

NOTE

- **Writing a card is a resource intensive operation for your computer - do not attempt to multitask (use the computer for anything else) during the writing procedure.**

14. When the writing is completed, the following screen appears.
In this screen, check sums will be compared between the firmware data and one written into the compact flash.

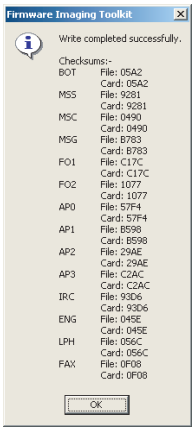

9J06F2E717DA

NOTE

- **The contents displayed on the screen may different according to the model type. The above is the screen displayed for firmware data writing of bizhub C450.**

15. Confirm each check sums are identical and quit Firmware Imaging Toolkit 2006.
16. Take out the compact flash from the PC.

NOTE

- **When removing the compact flash, be sure to check if data is written as normal and then remove it according to the precise removing method.**

10.4 Firmware rewriting by compact flash

- The firmware is updated using the compact flash.

10.4.1 Updating method

NOTE

- **NEVER remove or insert the compact flash card with the machine power turned ON.**

1. Turn OFF the power switch.
2. Open the rear right door.

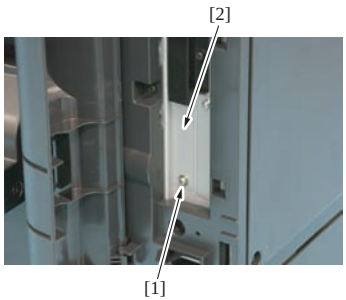

3. Remove the screw [1] and the metal blanking plate [2].

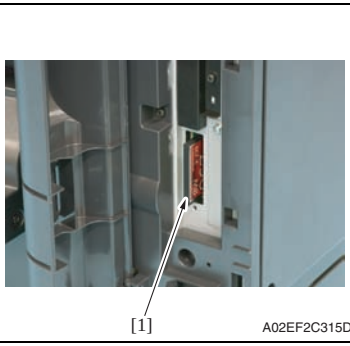

4. Insert the compact flash card [1] into the slot.

5. Turn ON the power switch.

6. Check the message and press the Menu/Select key to start the firmware rewrite.

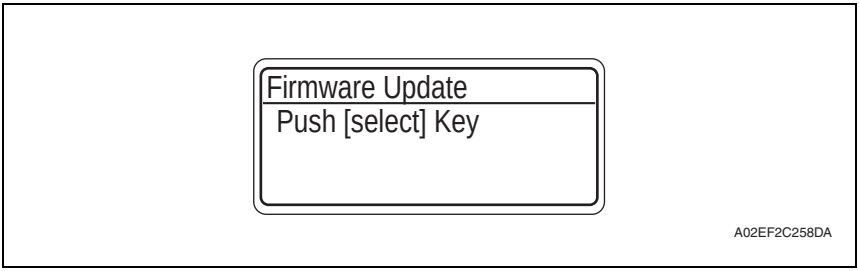

7. While the firmware rewrite is in process, the following message appears and LED line blinks in blue.

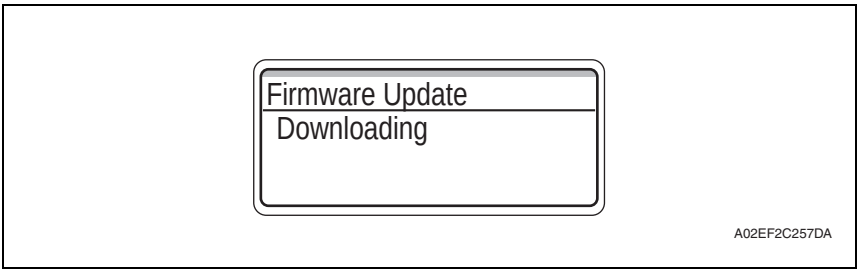

8. On the control panel, check the message, Download Completed, which tells the firmware update has been completed successfully. (LED line lights up in blue.)
9. Turn OFF the power switch.
10. Remove the compact flash from the slot.
11. Turn ON the power switch.

NOTE

- **When turning ON the power switch for the first time after completing the firmware update, do not turn OFF the power switch until "Ready to Print" message or the message that prompts you to enter a serial number appears.**
- **When the message that prompts you to enter a serial number appears after turning ON the power switch, enter the serial number from [Service Mode] → [System Settings] → [Enter Serial No.].**
- **If trouble code D3## appears after turning ON the power switch, irregularity in non-volatile data needs to be addressed.**

10.4.2 Action when data transfer fails

- If “Failed to Download” appears on the control panel, indicating that rewriting has been unsuccessful (in which case the Start key lights up red), take the following steps.

1. Perform the data rewriting procedure again.
2. If the procedure is abnormally terminated, change the compact flash for a new one and try another rewriting sequence.
3. If the procedure is still abnormally terminated, change the board and carry out data rewriting procedure.

MFP CONTROLLER	MFP board (MFPB)
PRINTER	Printer control board (PRCB)
FINISHER	FS control board (FSCB) *1

⚠ *1: The optional finisher FS-519 or FS-609 is necessary for the above procedure.

10.5 Updating the firmware with the Internet ISW

10.5.1 Outline

- [Internet ISW] is the system where the firmware update instructions are sent to the main body via either the control panel or the jig software so that the main body will automatically receive the latest firmware data from the program server over a network. Using Internet ISW allows updating the firmware while CE is visiting a customer site without bringing the latest firmware data.

10.5.2 Service environment

The following conditions are necessary for using the Internet ISW function.

- The main body is connected to such a network environment that the firmware can be downloaded on the internet using the ftp or http protocol.

The “Internet ISW” will not operate under the following conditions.

- Power switch is set to OFF.
- When the following setting is set to “ON”:
  [Admin. Settings] → [Security Settings] → [EnhancedSecurity]
- The main body has the job currently performing.

10.5.3 Preparations for firmware rewriting

- For using the Internet ISW, the network parameter, program server address as well as firewall address need to be set to the main body.
- For details of each setting item, refer to Adjustment/Setting “Internet ISW”.
  See P.377

A. Internet ISW Set

1. Start the jig software on the PC that has the software installed.

NOTE

- **Step 1 is necessary only for the setup from the jig software. Perform step 2 and later regardless of whether the jig software or the control panel is used.**

2. Call the Service Mode to the screen.

3. Select [Internet ISW Set] which is available from [Internet ISW].

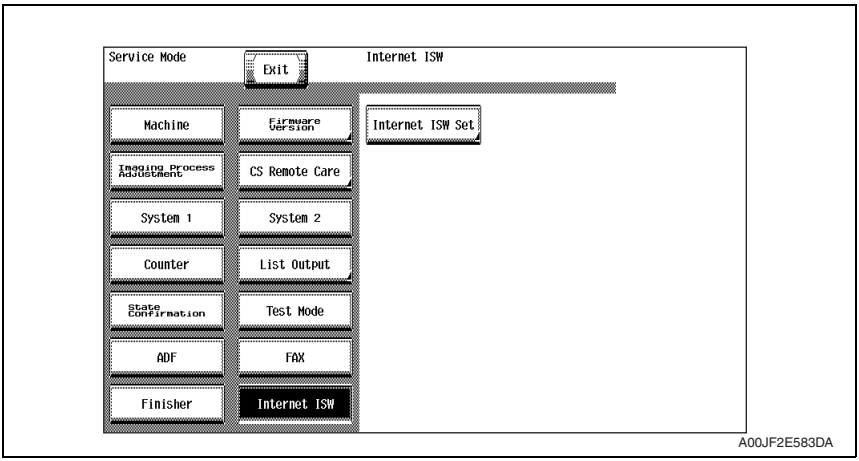

4. Click [ON], and click [END].
When using the control panel, select [Enable] and press the Menu/Select key.

NOTE
- **Settings such as server setting, etc. will be available by selecting "ON" on this setting.**
- **When the following setting is set to "ON", "ON" cannot be selected on this setting. [Admin. Settings] → [Security Settings] → [EnhancedSecurity]**

B. Protocol setting
- **It performs the setting concerning the protocol (ftp or http) for connecting to the Internet ISW.**
- **When connecting to the program server using a proxy server, perform the setting for a proxy server.**

Step	Connecting by http	Connecting by ftp
0	Select [Internet ISW] which is available from [Service Mode].	
1	Data Input Setting • Click [HTTP Setting], and select [ON]. Data acquisition setting (Control panel) • Select [HTTP Settings] → [DataRetrievalSet] → [Enable].	Data Input Setting • Click [FTP Setting], and select [ON]. Data acquisition setting (Control panel) • Select [FTP Settings] → [DataRetrievalSet] → [Enable].
2	Connect Proxy • For connecting via proxy server, select [ON].	
3	Proxy Server • For connecting via proxy server, set the proxy server address and the port number. *1.* Select the [Server Address], and set the proxy server address by IP addressing scheme or FQDN scheme. *2.* Select [Port Number], and set the port number for the proxy server from 1 through 65535.	
4	Proxy Authentication • Set the login name and the password which may be necessary for authentication when accessing to the proxy server. *1.* When Authentication is necessary for accessing to the proxy server, select [Authentication], and select [ON]. When using the control panel, select [Auth. Settings], and select [ON]. *2.* When using the jig software, select [Log-in Name] and enter the login name with the keyboard on the screen. When using the control panel, enter the auth. login name with the operation keys. *3.* When using the jig software, select [Password] and enter the password with the keyboard on the screen. When using the control panel, enter the auth. password with the operation keys.	Connection Setting • Perform the setting for accessing FTP server. *1.* Select [Port Number], and set the port number for FTP server from 1 through 65535. *2.* Select [Connection Time Out], and set the time for the connection time out from 1 through 60. When using the control panel, select [Time-out], and set the time for the connection time out from 1 through 60. *3.* When connecting in PASV mode, select [PASV Mode], and select [ON]. When using the control panel, select [PASV Mode], and select [Enable]. *PASV Mode: This mode is for transferring the file with FTP under the condition where communication is restricted such as inside the firewall. Since with PASV mode, the client with restriction sets the port number, data transmission port can be secured to enable the file transmission.

Step	Connecting by http	Connecting by ftp
5	Connection Time-Out • Select [Connection Time-out], and set the time for the connection time out between 30 and 300 seconds. ConnectionTimeout (Control panel) • Select [ConnectionTimeout], and set the time for the connection time out between 30 and 300 seconds.	—

C. Forwarding access setting

- To make the access setting for the program server which stores the firmware data.

1. Select [Internet ISW] which is available from [Service Mode].
2. Click [Forwarding Access Setting].
   * When using the control panel, select [ForwardAccessSet].

NOTE

- **The following setting screen appears when using the jig software. When using the control panel, a different setting screen appears.**

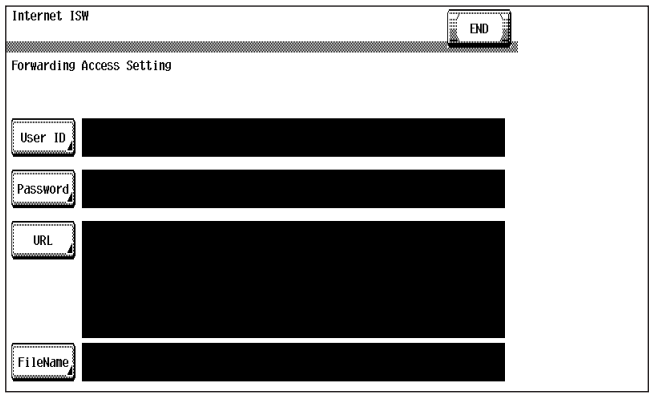

A00JF2E584DA

3. Select [User ID], and enter the user ID which is necessary for connecting to the program server on the on-screen keyboard, and click [END].
   * When using the control pane l, select [User ID], enter the user ID that is used for the connection to the program server with the operation keys, and press the Menu/Select key.
4. Select [Password], and enter the password which is necessary for connecting to the program server on the on-screen keyboard, and click [END].
   * When using the control panel, select [Password], enter the password that is used for the connection to the program server with the operation keys, and press the Menu/Select key.
5. Select [URL], and enter the directory which stores the program server address and the firmware on the on-screen keyboard by URL method, and click [END].
   * When using the control panel, select [URL], enter the URL of the directory that stores the program server address and firmware data with the operation keys, and press the Menu/Select key.

NOTE

- **Enter the URL which matches to the protocol to be used.**
  When connecting to http http://(host name or IP address)/directory name
  or https://(host name or IP address)/directory name
  When connecting to ftp ftp://(host name or IP address)/directory name

6. Select [FileName], and enter the file name of the firmware data to be downloaded on the on-screen keyboard, and click [END].
  * When using the control panel, select [File Name], enter the file name of the firmware data to be downloaded with the operation keys, and press the Menu/Select key.

7. Click [END] to finish setting.

10.5.4 Firmware rewriting

NOTE

- **When performing the Internet ISW, ask the administrator for permission beforehand.**
- **DO NOT turn OFF the power switch while downloading.**

A. Conducting rewriting on the control panel

1. Perform the following setting.
   [Service Mode] → [Internet ISW] → [Download]
2. Click [ISW Start].

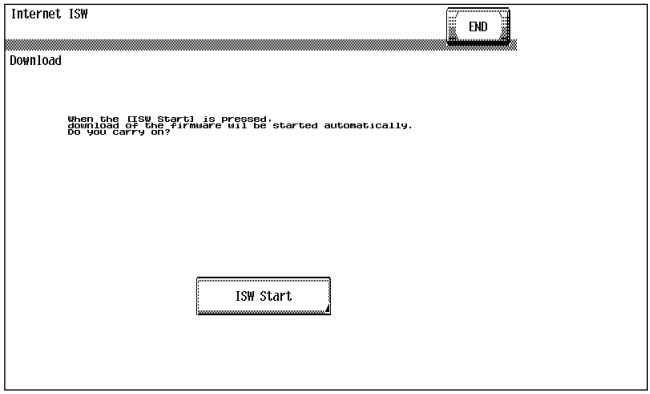

A00JF2E585DA

3. The main body will automatically start running, and it starts accessing the server.
4. Select the Firmware to be updated, and start downloading.

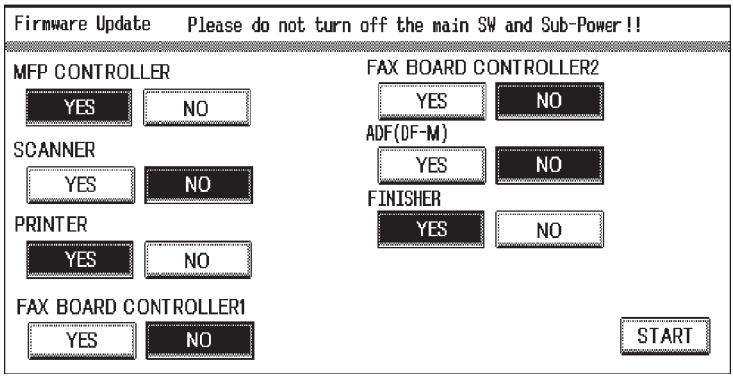

A02EF2C271DA

5. The message to indicate the status will be displayed on the screen while connecting or transferring data.
6. While the machine is connected to the server and data is downloaded, a status message appears on the control panel.

B. Update from the control panel

1. Select [Service Mode] → [Internet ISW] → [Download].
2. Select [Start] and press the Menu/Select key.
3. The message, [Rebooting. Please do not turn OFF power.], appears.
4. The machine starts rebooting itself. The control panel displays [Now initializing Please wait] to determine the machine configuration.
5. When connection is made, the control panel displays [Now Connecting to the Firmware Server].
6. While the machine is connected to the server, the message is displayed as shown in the following illustration.

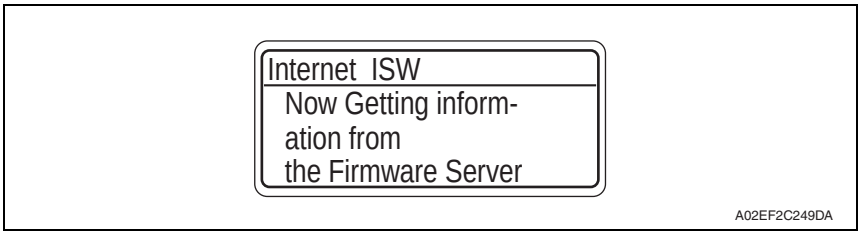

7. When the program starts running, the control panel displays [Now Downloading Program Data from the Firmware Server] and the download is started.
8. When the program download is successfully complete, the control panel displays [Push [select] Key.]
9. Press the Menu/Select key on the control panel to start downloading the firmware data.
10. While downloading the firmware data, the control panel displays [Downloading.]

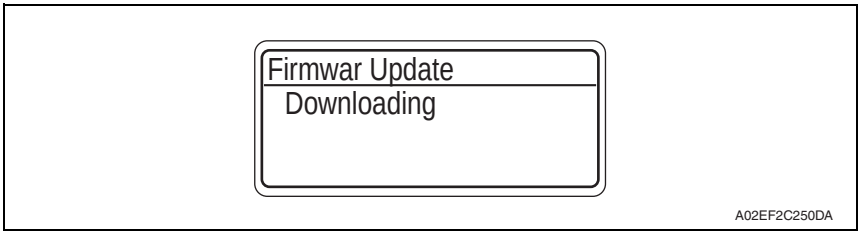

11. When the firmware download is complete, the control panel displays the message as shown in the following illustration.

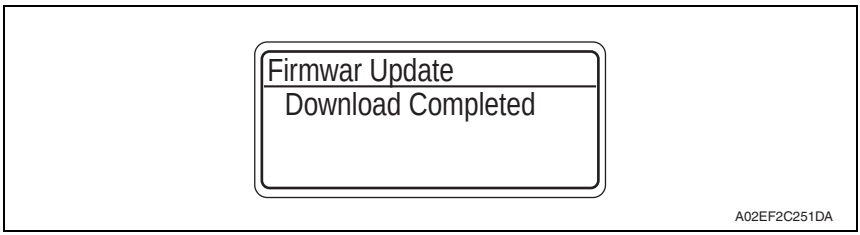

12. When Internet ISW is complete successfully, the control panel displays the message as shown in the following illustration.

A02EF2C281DA

C. Completed or failed

(1) Firmware updated normally

1. When the Firmware is normally updated, restart the main body in auto or manual mode to display the outcome, and press the Menu/Select key to return to the main screen.

(2) Failing to update the firmware due to the network trouble

1. When updating failed to complete due to the trouble on connecting to the network, an error code and the message will be displayed.
2. Restart the main body in auto or manual mode, and press the Menu/Select key. It can be used with the firmware version before conducting updating.
3. Check the settings for the network by error codes, and try updating again.

NOTE

- **For error codes, refer to "Error code list for the Internet ISW".**
See P.85

(3) Failing to update the firmware after downloading has started

1. Once firmware updating has started, the ROM in the main body will be deleted. When it failed right after updating has started, restart the main body, and shift to the standby screen to retry downloading.
2. When updating on the external panel controller, click [settings] on the standby screen, and check the Network settings again.
   Click [Download], and restart the Internet ISW.
   When updating on the control panel, press the Menu/Select key on the standby screen, and try reconnecting to the server.

NOTE

- **Return to the standby screen without fail after turning the power switch OFF/ON if the firmware is not updated.**
- **Firmware can be updated with the Compact flash with the power switch OFF.**

D. Confirming the firmware version

1. Use the PC that has the jig software installed and enter the Service Mode.
2. Select the [Firmware Version].
3. Check if the firmware version is updated.

10.5.5 Error code list for the Internet ISW

- When a trouble occurred while conducting the Internet ISW and it was not normally connected, the message on the status and the error code will be displayed on the control panel.
  When updating with CS Remote Care, the error code will be sent to the CS Remote Care center.

<Sample display>

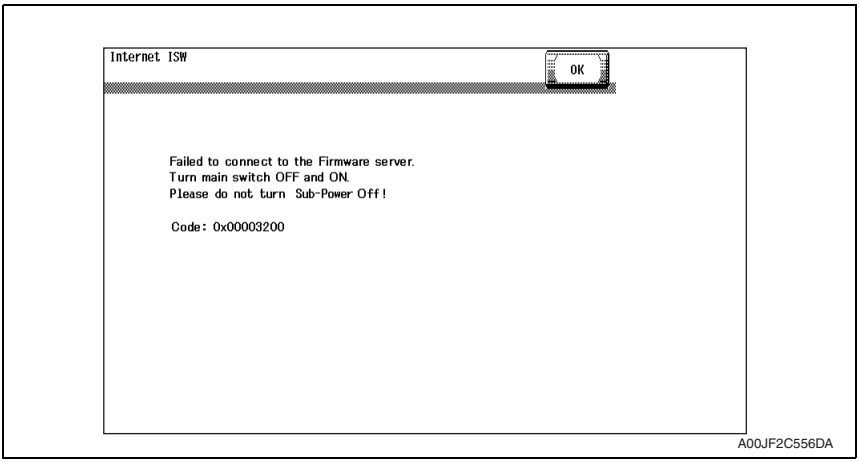

A00JF2C556DA

Error code Control panel	Description	Countermeasure
0x00000001	Illegal error on the control	• Check if the following setting is set to “ON”. When using the control panel, check if the following setting is set to “Enable”. [Service Mode] → [Internet ISW] → [Internet ISW Set] • Check the status of the following setting. [Service Mode] → [Internet ISW] → [Forwarding Access Setting] When using the control panel, [Service Mode] → [Internet ISW] → [ForwardAccessSet] • If the above process does not solve the problem, inform the corresponding error code to the KONICA MINOLTA.
0x00000010	Parameter error	• Check if the following setting is set to “ON”. When using the control panel, check if the following setting is set to “Enable”. [Service Mode] → [Internet ISW] → [Internet ISW Set] • If the above process does not solve the problem, inform the corresponding error code to KONICA MINOLTA.

Error code Control panel	Description	Countermeasure
0x00111000	Error concerning the network • Connection has been completed.	• Check the User's network environment. (LAN cable's connection) • Check the status of the following setting. [Service Mode] → [Internet ISW] → [Forwarding Access Setting] When using the control panel, [Service Mode] → [Internet ISW] → [ForwardAccessSet] • Check to see if the FTP server operates normally.
0x00111001	Error concerning the network • It cannot be connected to the server.	• Check the network environment of the User. • Check to see if the FTP server operates normally.
0x00111100	Error concerning the network • Communication timeout.	
0x00111101	Error concerning the network • Disconnection occurred	• Check the network environment of the User. • Check to see if the FTP server operates normally.
0x00111110	Error concerning the network • The network is not connected.	
0x00110010	Error concerning the network • Others	
0x00001###	FTP error • Reply code when it failed to be connected	• Check to see if FTP server normally operates. • Check the IP address, user's name, etc.
0x00002###	FTP error • Error reply code for the user command or pass command	• Check to see if FTP server operates normally.
0x00003###	FTP error • Error reply code for CWD command	
0x00004###	FTP error • Error reply code for the TYPE command.	• Check to see if FTP server operates normally.
0x00005###	FTP error • Error reply code for the PORT command.	
0x00006###	FTP error • Error reply code for the PASV command.	• Check to see if FTP server operates normally. • Set the PASV mode to "OFF", and try it again. When using the control panel, set the PASV mode to "Disable", and try it again.
0x00007###	FTP error • Error rely code for the RETR command.	• Check to see if FTP server operates normally. • Wait for about 30 minutes and try it again.
0x1000 0100	• It cannot be accepted because of the job currently being executed. • ISW being executed by other method.	• Wait for the current job to be completed and try it again.

Error code Control panel	Description	Countermeasure
0x10000102	• The Internet ISW is already being executed.	• Wait for the current Internet ISW to be completed.
0x10000103	• It failed to prohibit the job. (It failed to lock the operation.) → It failed to lock the job because the operation is already locked with PSWC, etc.	• Check if the following setting is set to "ON". When using the control panel, check if the following setting is set to "Enable". [Service Mode] → [Internet ISW] → [Internet ISW Set] • If the above process does not solve the problem, inform the corresponding error code to the KONICA MINOLTA.
0x10000104	• There is no space for F/W data to be downloaded.	
0x10000106	• Check sum error	
0x10000107	File access error • The file downloaded has an error. • The header of the file which has been read has an error. • The size of the file to be downloaded is too large. • When it is identified to be the different type of F/W.	• Check to see if the downloaded F/W is of the correct type.
0x10000108	• The area F/W is stored is destroyed, and another ISW is necessary.	• Wait until ISW is automatically executed on printer side.
0x20000000	The temporary error when running the subset • When starting the Internet ISW in a normal program, the rebooting will start and the Internet ISW will be executed with the subset program. During the process by the subset program, it has to be in the "Failed" status unless the Internet ISW is successfully conducted. This code is used temporarily to make it in error status.	

11. Other

11.1 Disassembly/adjustment prohibited items

A. Paint-locked screws

NOTE
- **To prevent loose screws, a screw lock in blue or green series color is applied to the screws.**
- **The screw lock is applied to the screws that may get loose due to the vibrations and loads created by the use of machine or due to the vibrations created during transportation.**
- **If the screw lock coated screws are loosened or removed, be sure to apply a screw lock after the screws are tightened.**

B. Red-painted screws

NOTE
- **The screws which are difficult to be adjusted in the field are painted in red in order to prevent them from being removed by mistake.**
- **Do not remove or loosen any of the red-painted screws in the field. It should also be noted that, when two or more screws are used for a single part, only one representative screw may be marked with the red paint.**

C. Variable resistors on board

NOTE
- **Do not turn the variable resistors on boards for which no adjusting instructions are given in Adjustment/Setting.**

D. Removal of PWBs

⚠ CAUTION
- **When removing a circuit board or other electrical component, refer to "Handling of PWBs" and follow the corresponding removal procedures.**
- **The removal procedures given in the following omit the removal of connectors and screws securing the circuit board support or circuit board.**
- **Where it is absolutely necessary to touch the ICs and other electrical components on the board, be sure to ground your body.**

11.2 Disassembly/assembly/cleaning list (other parts)

11.2.1 Disassembly/assembly parts list

No.	Section	Part name	Ref. page
1	Exterior parts	Front door	P.92
2		Upper front cover	P.93
3		Right front cover/1	P.94
4		Right front cover/2	P.94
5		Left cover	P.96
6		Rear left cover	P.97
7		Exit cover	P.97
8		Rear right cover/1	P.98
9		Rear right cover/2	P.98
10		Manual bypass tray front cover	P.99
11		Manual bypass tray rear cover	P.99
12		Upper rear cover	P.99
13		Rear cover/1	P.99
14		Rear cover/2	P.99
15		Lower rear cover/1	P.100
16		Lower rear cover/2	P.100
17		Vertical transport door	P.100
18		Control panel assy	P.101
19		Exit tray	P.101
20		Paper feed tray 1	P.102
21		Paper feed tray 2	P.102
22		Front cover	P.103
23	Units	PH unit	P.105
24		Manual bypass tray unit	P.110
25		Main drive unit	P.111
26		Transport drive unit	P.113
27		Fusing drive unit	P.116
28		Hopper drive unit (C/K, Y/M)	P.118
29		Right door assy	P.119

No.	Section	Part name	Ref. page
30	PWBs	PH relay board (PHREYB)	P.122
31		DC power supply (DCPU)	P.124
32		Printer control board (PRCB)	P.126
33		MFP board (MFPB)	P.128
34		High voltage unit (HV)	P.132
35		Service EEPROM board (SV ERB)	P.133
36		SODIMM/1, SODIMM/2	P.135
37		JMP board (JMPB)	P.135
38		NVRAM board (NRB)	P.136
39		Paper feed tray 1 paper FD size detect board (PSDTB/1)	P.136
40		Paper feed tray 2 paper FD size detect board (PSDTB/2)	P.137
41	Motors	Transport motor (M1)	P.138
42		Color PC motor (M2)	P.138
43		Fusing motor (M5)	P.139
44		Switchback motor (M6)	P.140
45		Duplex transport motor (M7)	P.141
46		Fusing retraction motor (M12)	P.141
47		Paper feed tray 1 lift-up motor (M8)	P.143
48		Paper feed tray 2 lift-up motor (M9)	P.144
49		Toner supply motor/CK (M3)	P.146
50		Toner supply motor/YM (M4)	P.146
51	Clutches	Paper feed tray 1 paper feed clutch (CL1)	P.147
52		Paper feed tray 2 vertical transport clutch (CL3)	P.148
53		Paper feed tray 2 paper feed clutch (CL2)	P.149
54		Manual paper feed clutch (CL4)	P.149
55		Transfer belt retraction clutch (CL7)	P.150
56		Developing clutch/K (CL5)	P.150
57		Tim. roller clutch (CL6)	P.151
58	etc.	IDC registration sensor/MK (IDCS/MK)	P.152
59		IDC registration sensor/YC (IDCS/YC)	P.152

11.2.2 Cleaning parts list

No.	Section	Part name	Ref. page
1	Processing section	Transfer belt unit	P.154
2		PH window	P.154
3	Paper feed tray 1	Paper feed tray 1 feed roller	P.155
4		Paper feed tray 1 pick-up roller	P.155
5		Paper feed tray 1 separation roller	P.155
6	Paper feed tray 2	Paper feed tray 2 feed roller	P.156
7		Paper feed tray2 pick-up roller	P.156
8		Paper feed tray 2 separation roller	P.156
9		Paper feed tray 2 transport roller	P.157
10	Manual bypass tray	Manual bypass tray feed roller	P.157
11		Manual bypass tray separation roller	P.157

11.3 Disassembly/assembly procedure

11.3.1 Front door

1. Open the front door.

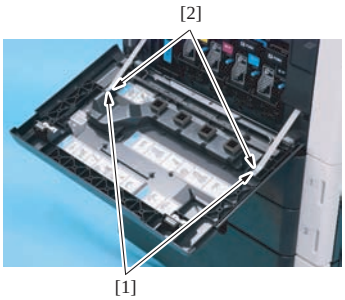

A02EF2C041DA

2. Remove two screws [1] and the suppression plate [2].

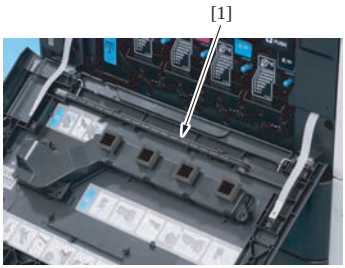

A02EF2C042DA

3. Remove the PH window cleaning jig [1].

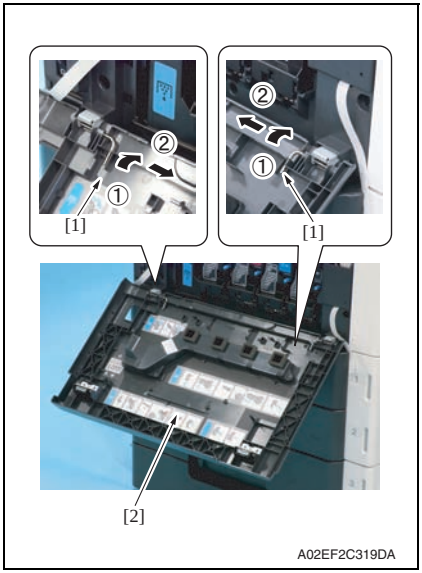

4. Slide the pins [1] in the direction of the arrow and remove it.
5. Remove the front door [2].

11.3.2 Upper front cover

1. Open the front door.
2. Open the right door.
3. Remove the exit tray.
See P.93

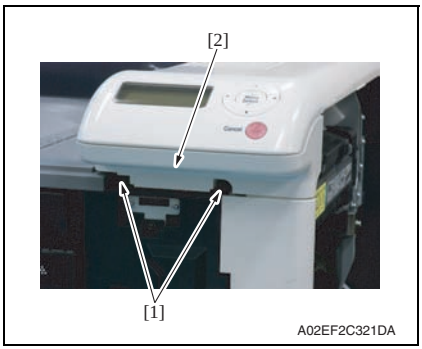

4. Remove two screws [1], and remove the upper front cover [2].

11.3.3 Right front cover/1

1. Open the front door.
2. Open the right door.
3. Remove the upper front cover.
See P.93

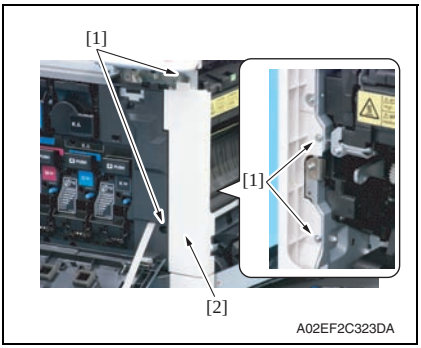

4. Remove four screws [1], and remove the right front cover/1 [2].

11.3.4 Right front cover/2

1. Slide out the paper feed tray 1 and paper feed tray 2.
2. Remove the right front cover/1.
See P.94

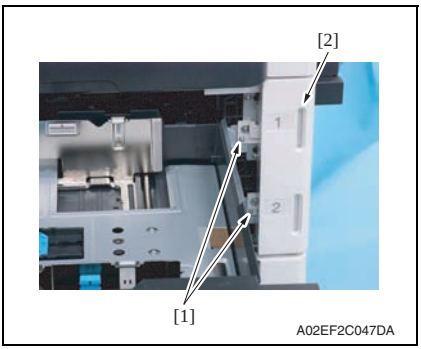

3. Remove two screws [1], and remove the right front cover/2 [2].

NOTE

- **Do not remove it in rush as it is connected to the harness.**

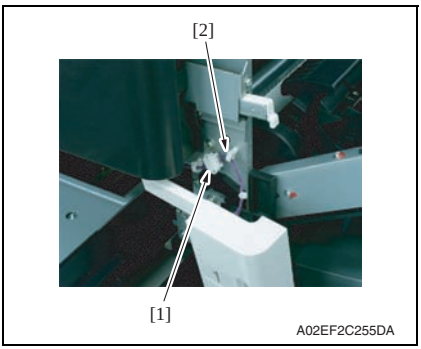

4. Disconnect the connector [1], and remove the harness from the wire saddle [2].

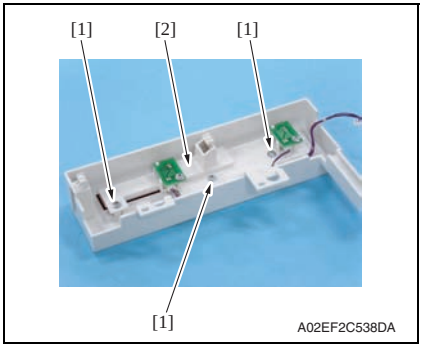

5. Remove three screw [1], and remove the paper empty indicator board assy [2].

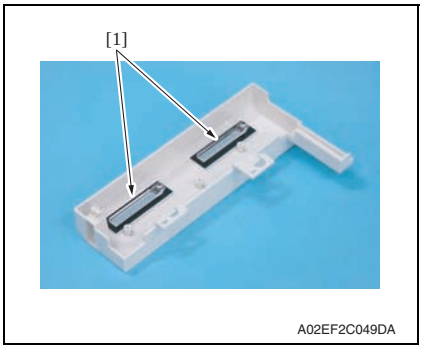

6. Remove two empty display lenses [1].

11.3.5 Left cover

1. Open the front door.

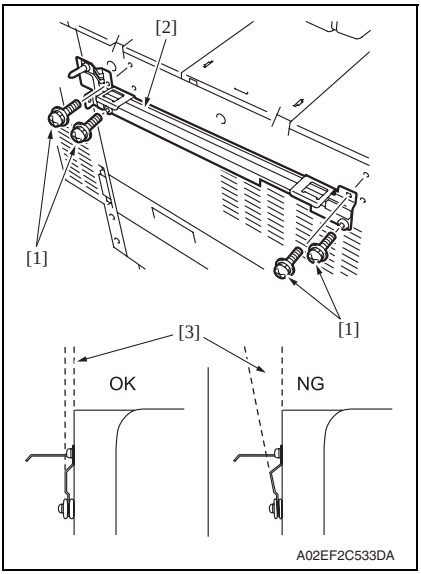

2. If the optional finisher FS-519 is mounted, remove it.
See P.30 of the FS-519/PK-515/OT-602 service manual.

NOTE

- **After removing the finisher FS-519, remove four screws [1] and mounting plate [2].**
- **When reinstalling the mounting plate, do not secure two lower screws too tight, and make sure that the plate and the main unit will be parallel and the clearance [3] between those two will be even.**

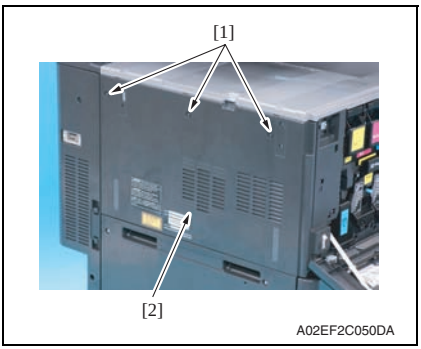

3. Remove three screws [1], and remove the left cover [2].

11.3.6 Rear left cover

1. Open the front door.
2. Remove the ozone filter.
See P.38
3. Remove the left cover.
See P.97

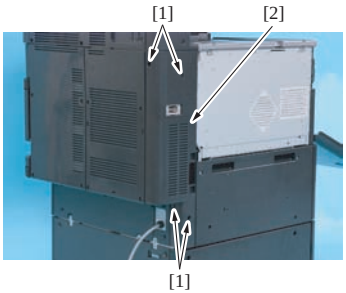

4. Remove four screws [1], and remove the rear left cover [2].

11.3.7 Exit cover

1. Open the right door.
2. Open the exit cover.

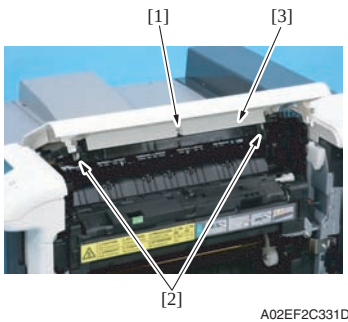

3. Remove the screw [1] and two claws [2] to remove the exit cover [3].

11.3.8 Rear right cover/1

1. Open the right door.

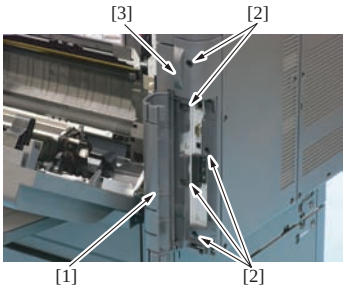

2. Open the rear right door [1],
3. Remove five screws [2], and remove the rear right cover/1 [3],

11.3.9 Rear right cover/2

1. Open the vertical transport door.

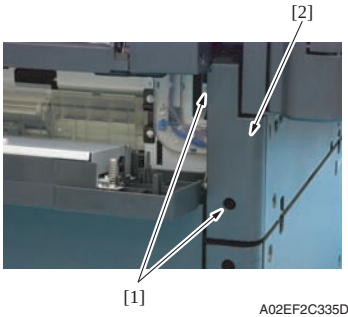

2. Remove two screws [1], and remove the rear right cover/2 [2].

11.3.10 Manual bypass tray front cover, manual bypass tray rear cover

1. Open the vertical transport door.
2. Remove the rear right cover/2.

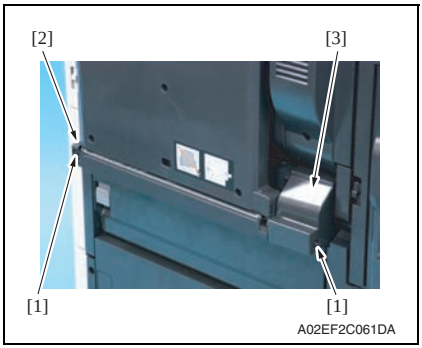

3. Remove two screws [1], and remove the manual bypass tray front cover [2] and the manual bypass tray rear cover [3].

11.3.11 Upper rear cover

1. Open the right door.
2. Remove the left cover.
See P.96
3. Remove the rear left cover.
See P.97

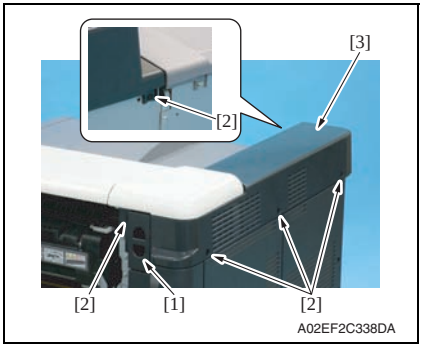

4. Remove the filter folder [1].
5. Remove five screws [2],remove the upper rear cover [3].

11.3.12 Rear cover/1, Rear cover/2.

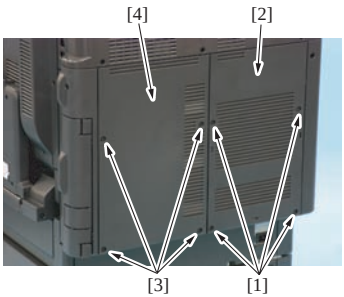

1. Remove four screws [1], and remove the rear cover/2 [2].
2. Remove four screws [3], and remove the rear cover/1 [4].

11.3.13 Lower rear cover/1, lower rear cover/2

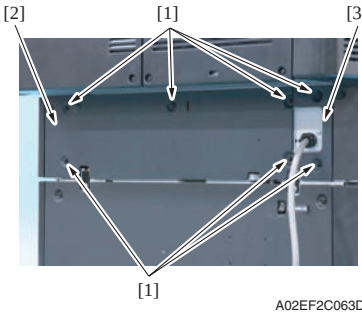

1. Remove seven screws [1], and remove the lower rear cover/1 [2] and the lower rear cover/2 [3].

11.3.14 Vertical transport door

1. Open the vertical transport door.

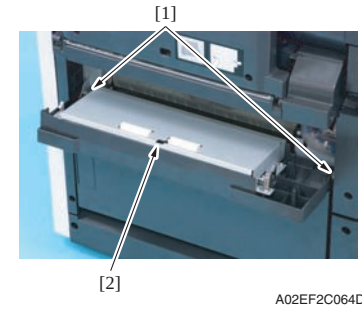

2. Unhook two tabs [1], and remove the vertical transport door [2].

11.3.15 Control panel assy

1. Open the right door.
2. Open the exit cover.
3. Remove the upper front cover.
See P.101

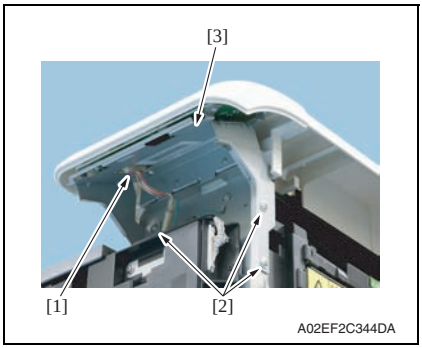

4. Disconnect the connector [1], Remove three screws [2], and remove the control panel assy [3].

11.3.16 Exit tray

1. Open the front door.
2. Remove the left cover.
See P.101

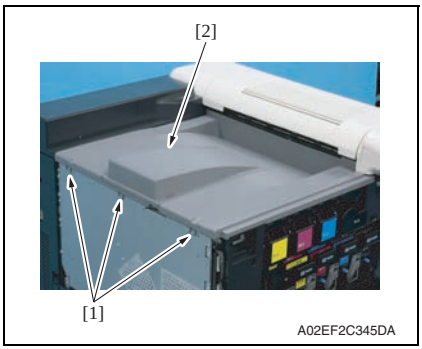

3. Remove three screws [1], and remove the exit tray [2].

11.3.17 Paper feed tray 1

1. Slide out the paper feed tray 1.

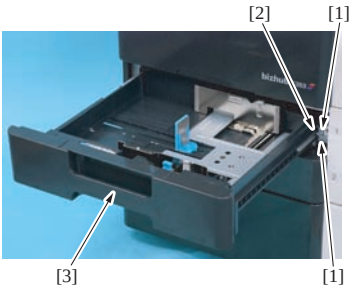

2. Remove two screw [1], and metal plate [2], and remove the paper feed tray 1 [3].

11.3.18 Paper feed tray 2

1. Slide out the paper feed tray 1 and paper feed tray 2.
2. Remove the right front cover/2.
See P.102

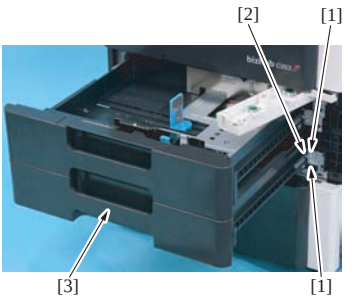

3. Remove two screw [1] and metal plate [2], and remove the paper feed tray 2 [3].

11.3.19 Front cover

1. Slide out the paper feed tray 1.
2. Remove the front door.
See P.92
3. Remove the left cover.
See P.96
4. Remove the toner cartridges (C, M, Y, K).
See P.38
5. Remove the waste toner box.
See P.32
6. Remove the imaging units (C, M, Y, K).
See P.34
7. Remove the right front cover/2.
See P.94

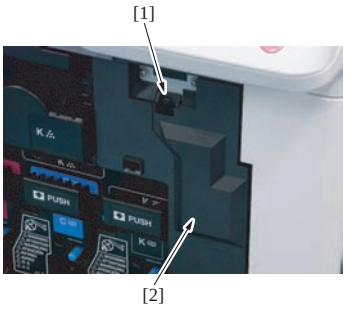

8. Remove the screw [1], and remove the connector protective cover [2].

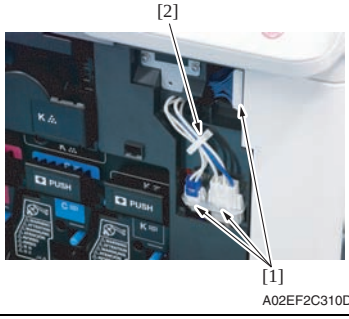

9. Disconnect three connectors [1], and remove the harness from the wire saddle [2].

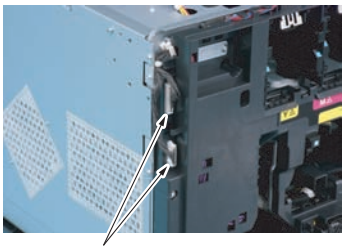

10. Disconnect two connectors [1].

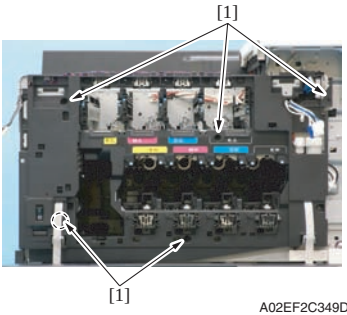

11. Remove five screws [1].

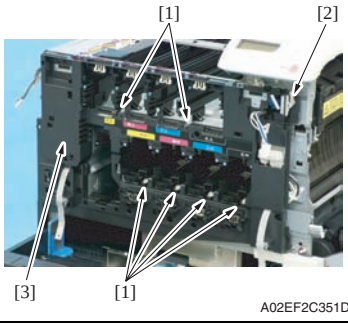

12. Unhook six tabs [1], and disconnect the connector [2] from the front cover.

13. Remove the front cover [3].

11.3.20 PH unit

CAUTION
• **Do not replace the PH unit while the power is ON. Laser beam generated during the above mentioned activity may cause blindness.**
• **Do not disassemble or adjust the PH unit. Laser beam generated during the above mentioned activity may cause blindness.**

NOTE

- **When replace the PH unit, replace 4-color PH units at the same time.**

A. Removal procedure

1. Remove the front cover.
See P.103
2. Remove the transfer belt unit.
See P.40

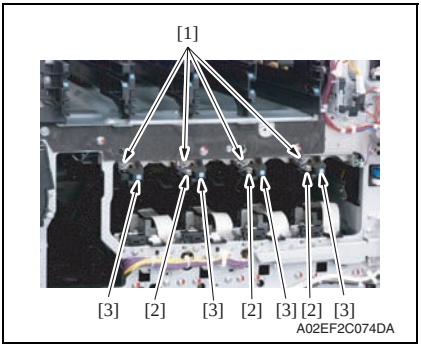

3. Remove four screws [1] and disconnect three connectors [2], and remove four imaging unit guide rails [3].

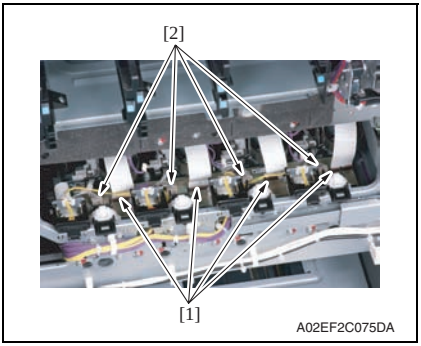

4. Disconnect four flat cables [1] and four connectors [2] of the PH unit.

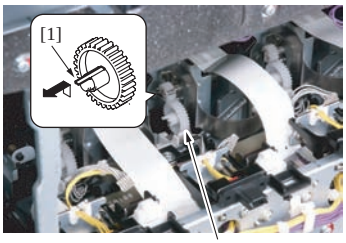

A02EF2C076DA

5. Unhook the tab [1], and remove the gear [2] of the PH unit.

NOTE

- **This step is not needed when removing PH unit (Black) that does not have a gear.**

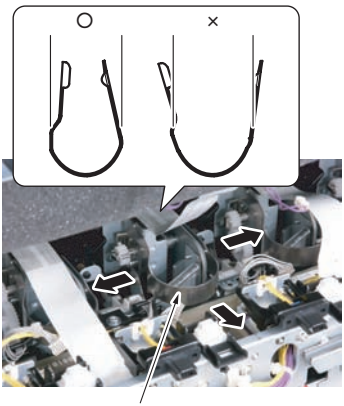

A02EF2C077DA

6. Remove the stopper [1] of the PH unit.

NOTE

- **When removing the stopper, use care so that both ends of the stopper will not open but stay parallel as shown on the left.**
  Keep using the stopper after once stretched out may cause uneven pitch or other image troubles.

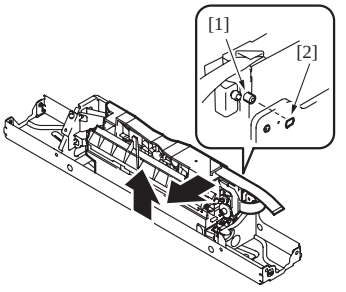

9J06F2C575DA

7. Remove the PH unit.

Move the front side of the PH unit to left a little, and remove the boss [1] from the locating hole [2].
Lift up the front side of the PH unit a little.

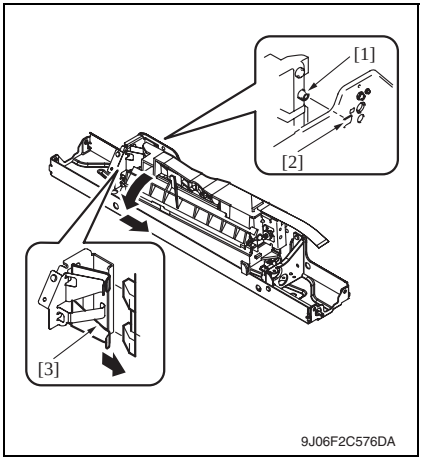

Remove the boss [1] at the rear side of the PH unit from the locating hole [2].

NOTE

- **Since the back of the PH unit is pushed to the right with the two plate springs [3], remove it by tilting the backside of the PH unit to the left as shown in the left illustration.**

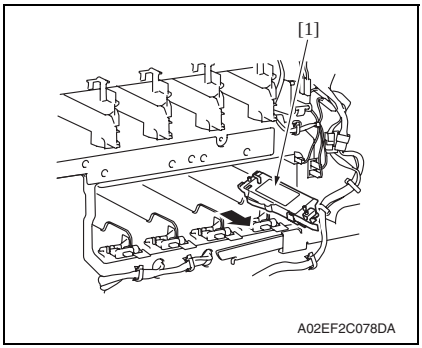

Remove the PH unit [1].

8. Follow the same procedures to remove all PH units.

B. Reinstall procedure

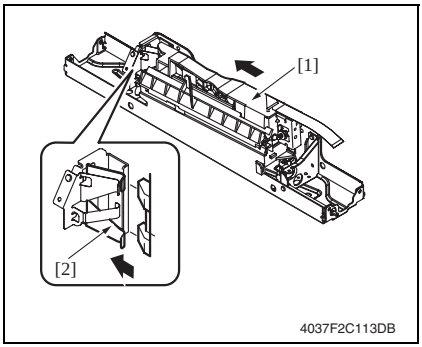

1. Fit the back of the PH unit [1] into the plate spring [2] of installation plate.

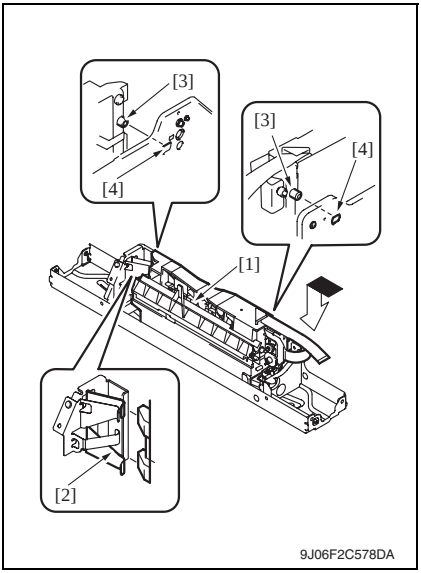

2. Push the PH unit [1] along the right side line of PH unit installation plate all the way and fit it into the plate spring [2].

3. Make sure that the two bosses [3] at front and rear side of the PH unit fit in the locating hole [4].

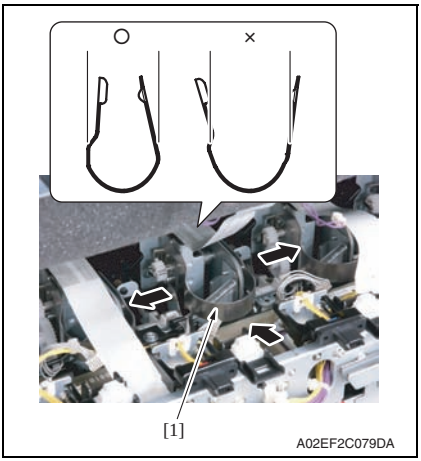

4. Reinstall the stopper [1].

NOTE

- **When reinstalling the stopper, use care so that both ends of the stopper will not open but stay parallel as shown on the left.**
  Keep using the stopper after once stretched out may cause uneven pitch or other image troubles.

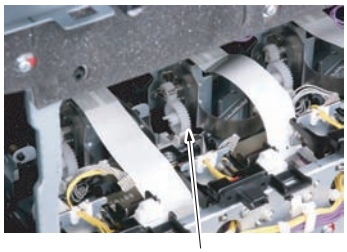

5. Reinstall the gear [1].

NOTE

- **Make sure that the gear claw is fit in.**

6. Connect the connector and the flat cable.

NOTE

- **Make sure the harness is installed along with the harness guide.**

7. Follow the same procedures to install all the PH units.

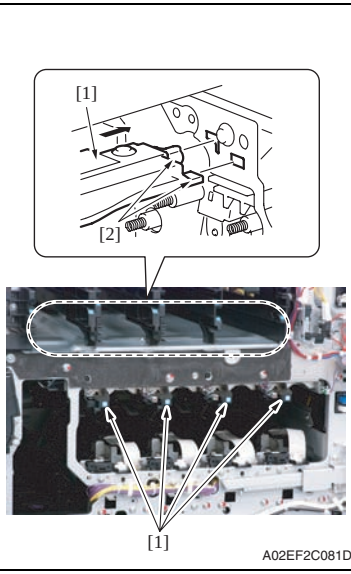

8. Install the imaging unit guide rails [1].

NOTE

- **Make sure that the two claws [2] at rear end of the rail are fit in the locating hole on the main unit.**

9. Reinstall the Image transfer belt unit.

10. Reinstall the front cover.

11. Make skew adjustment of the PH unit.
See P.392

NOTE

- When replacing the PH unit, make sure to conduct PH unit skew adjustment.

11.3.21 Manual bypass tray unit

1. Open the vertical transport door.
2. Remove the rear right cover/2.
See P.99
3. Remove the manual bypass tray front cover and the manual bypass tray rear cover.
See P.99

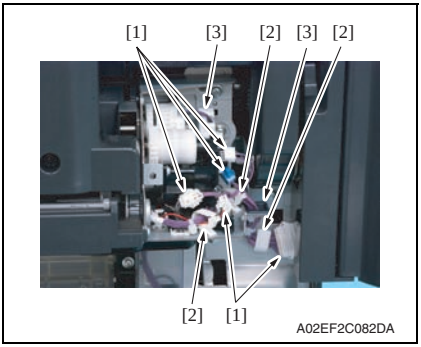

4. Disconnect five connectors [1], and remove the harness from the three wire saddles [2] and two edge covers [3].

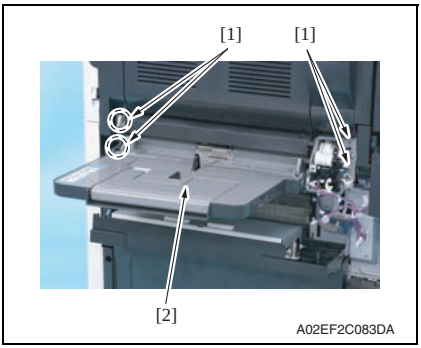

5. Remove four screws [1], and remove the manual bypass tray unit [2].

11.3.22 Main drive unit

1. Remove the transfer belt unit.
See P.40
2. Remove the high voltage unit.
See P.132
3. Remove the Color PC motor.
See P.138
4. Remove the transport motor.
See P.138

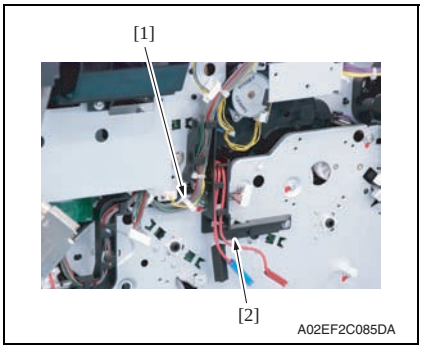

5. Remove the harness from the wire saddle [1] and the harness cover [2].

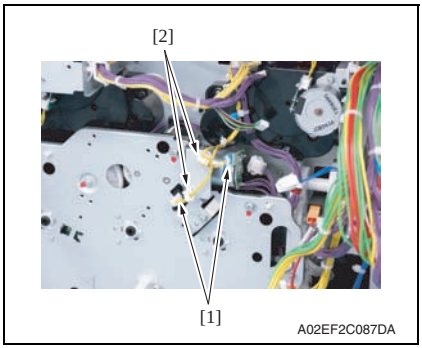

6. Disconnect two connectors [1], and remove the harness from two wire saddles [2].

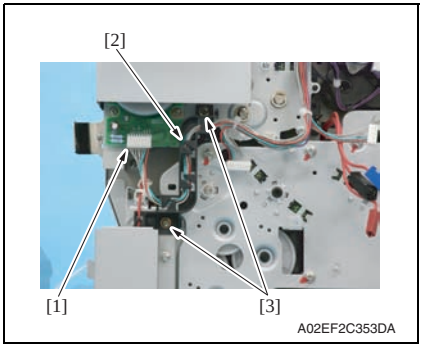

7. Disconnect the connector [1], and remove the harness from the harness guide [2].
8. Remove two screws [3], and remove the harness guide [2].

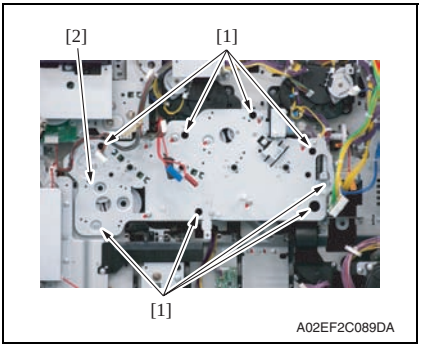

9. Remove eight screws [1], and slide out the main drive unit [2].

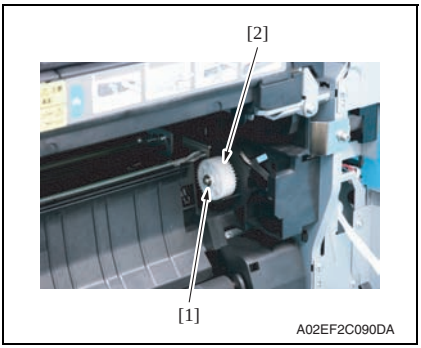

10. Remove the E-ring [1], and remove the gear [2].

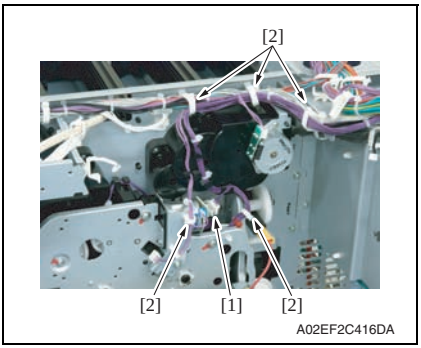

11. Disconnect the connector [1], and remove the harness from five wire saddles [2].
12. Remove the main drive unit.

11.3.23 Transport drive unit

1. Remove the manual bypass tray unit.
See P.110
2. Remove the main drive unit.
See P.111
3. Remove the lower rear cover/1 and the lower rear cover/2.
See P.100

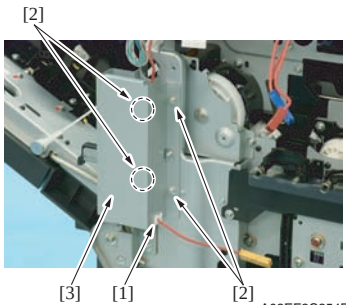

A02EF2C354DA

4. Remove the harness from the edge cover [1].
5. Remove four screws [2], and remove the metal plate [3].

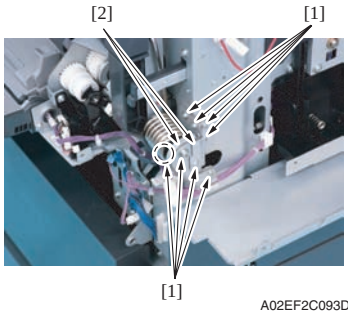

A02EF2C093DA

6. Close the right door.
7. Remove eight screws [1], and remove two reinforcement plates [2] of the right door.

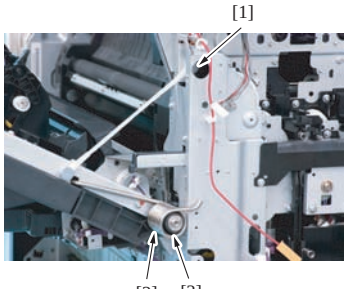

A02EF2C094DA

8. Remove the shoulder screw [1], the spring [2] and the collar [3].

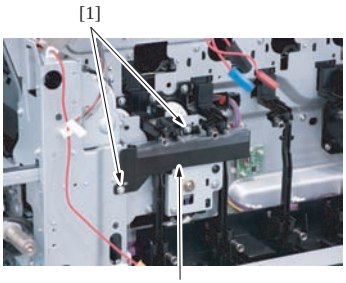

9. Remove two screws [1], and remove the rear handle cover [2].

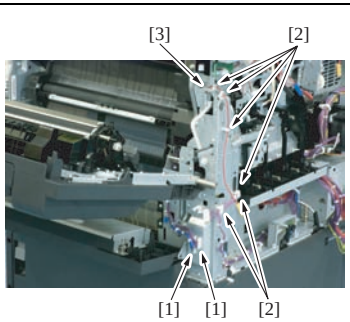

10. Disconnect two connectors [1], and remove the harness from six wire saddles [2] and the edge cover [3].

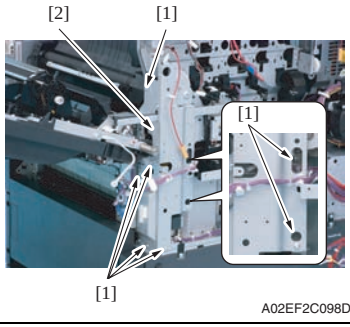

11. Remove seven screws [1], and remove the rear handle assy [2].

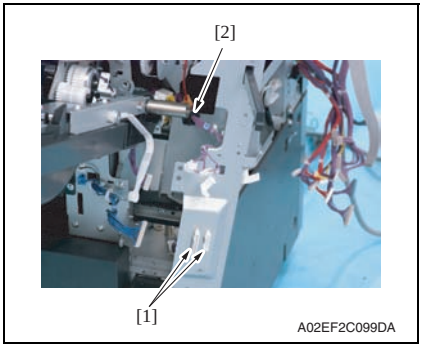

12. Disconnect two connectors [1], and remove the harness from the edge cover [2].

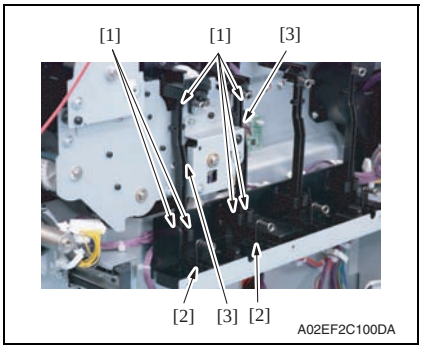

13. Remove each six tabs [1] and two hooks [3].Remove two wire guides [2].

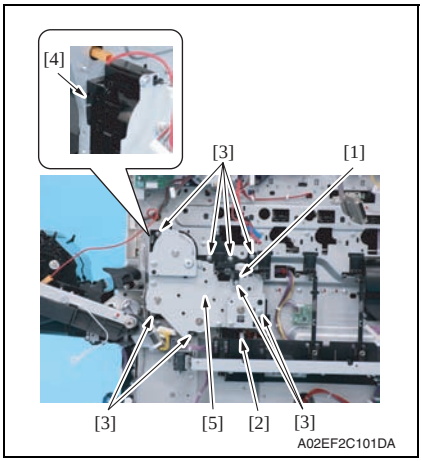

14. Remove the wire guide [1] and eight screws [3], and disconnect the connector [2].
15. Unhook the tab [4], and remove the transport drive unit [5].

11.3.24 Fusing drive unit

1. Remove the transfer belt unit.
See P.40
2. Remove the fusing unit.
See P.43
3. Remove the fusing motor.
See P.139

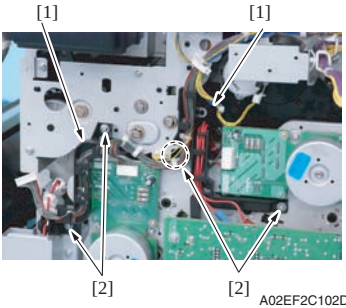

A02EF2C102DA

4. Remove the harness from two harness guides [1].
5. Remove four screws [2], and remove the harness guide [1].

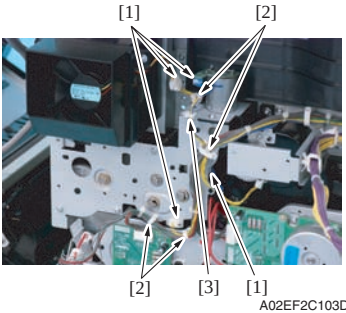

A02EF2C103DA

6. Disconnect four connectors [1], and remove the harness from four wire saddles [2].
7. Remove the harness from the edge cover [3].

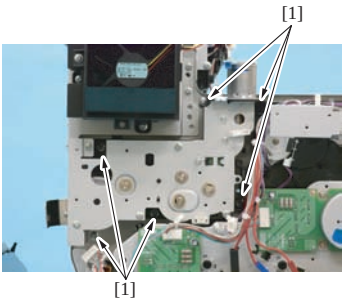

A02EF2C359DA

8. Remove six screws [1] of the fusing drive unit.

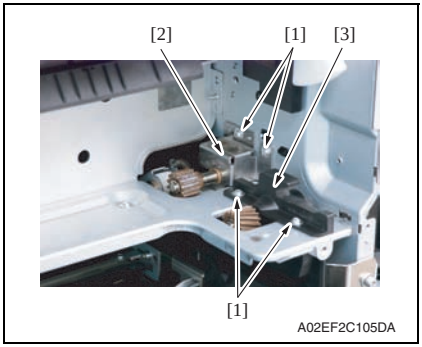

9. Remove four screws [1], and remove the fusing rear guide [2] and the shaft cover [3].

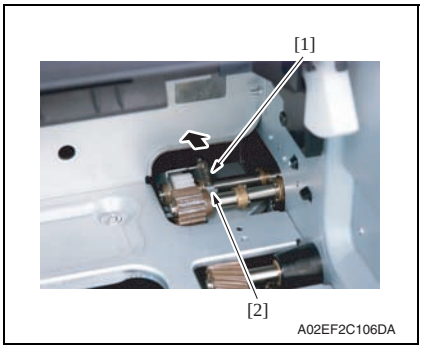

10. Remove the spring [1] from the protrusion [2].

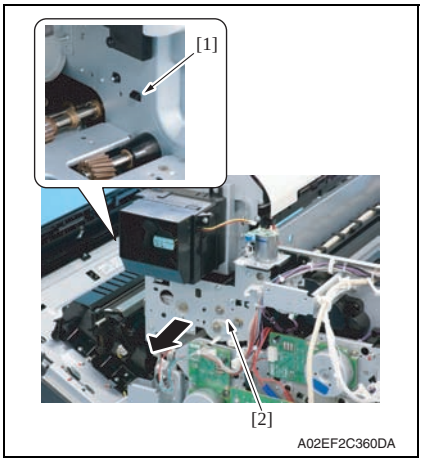

11. Unhook the tab [1].
Pull the fusing drive unit [2] to the front and remove it.

11.3.25 Hopper drive unit (C/K, Y/M)

A. Hopper drive unit (C/K)

1. Remove the main drive unit.
See P.111

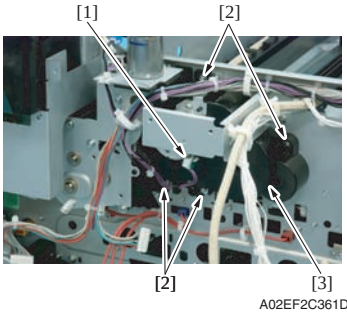

2. Disconnect the connector [1].
3. Remove four screws [2], and remove the hopper drive unit (C/K) [3].

B. Hopper drive unit (Y/M)

1. Remove the main drive unit.
See P.111

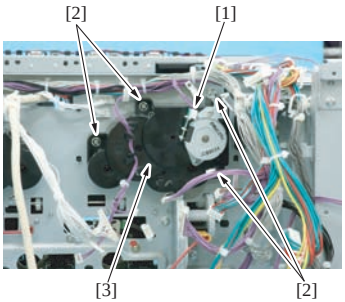

2. Disconnect the connector [1].
3. Remove four screws [2], and remove the hopper drive unit (Y/M) [3].

11.3.26 Right door assy

1. Remove the lower rear cover/1 and the lower rear cover/2.
See P.100
2. Remove the manual bypass tray unit.
See P.110
3. Remove the high voltage unit.
See P.132
4. Slide out the paper feed tray 1.
5. Remove the right front cover/2.
See P.94

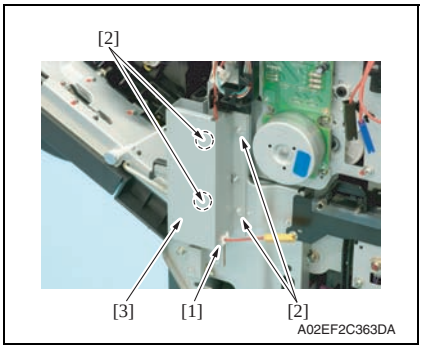

6. Remove the harness from the edge cover [1].
7. Remove four screws [2], and remove the metal plate [3].

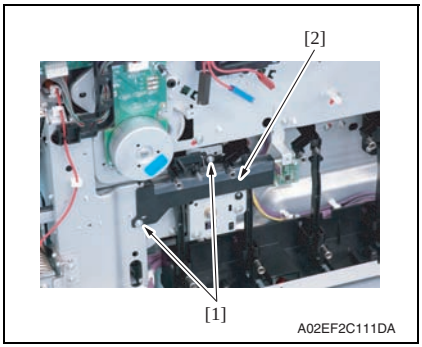

8. Remove two screws [1], and remove the rear handle cover [2].

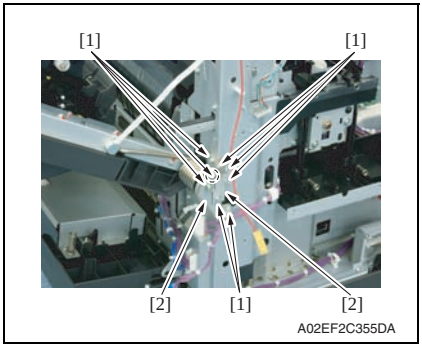

9. Remove eight screws [1], and remove two reinforcement plates [2] of the right door.

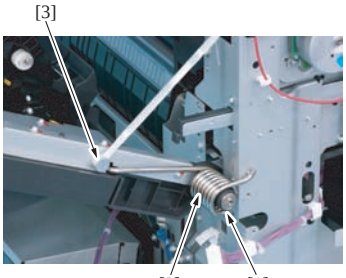

10. Open the right door, and remove the collar [1], the spring [2] and the shoulder screw [3].

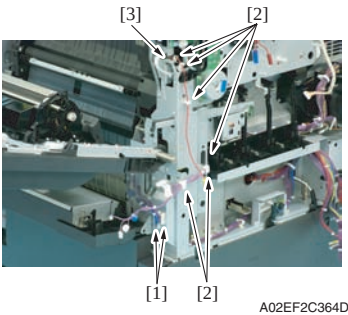

11. Disconnect two connectors [1], and remove the harness from six wire saddles [2] and the edge cover [3].

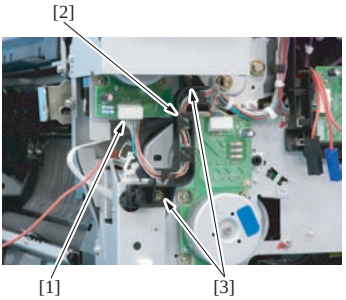

12. Disconnect the connector [1], and remove the harness from the harness guide [2].
13. Remove two screws [3], and remove the harness guide [2].

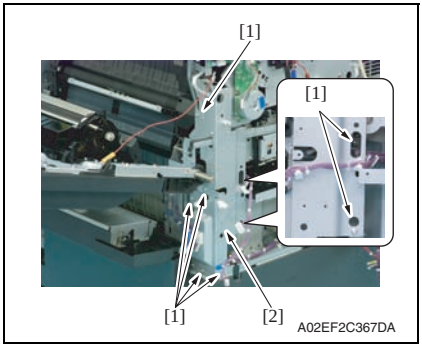

14. Remove seven screws [1] and remove the rear handle assy [2].

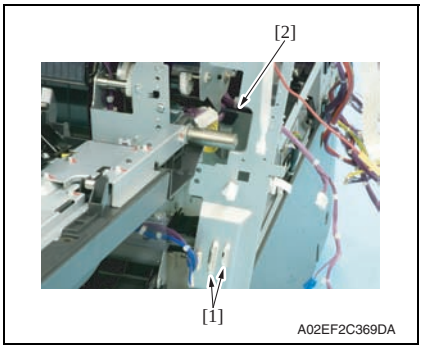

15. Disconnect two connectors [1], and remove the harness from the edge cover [2].

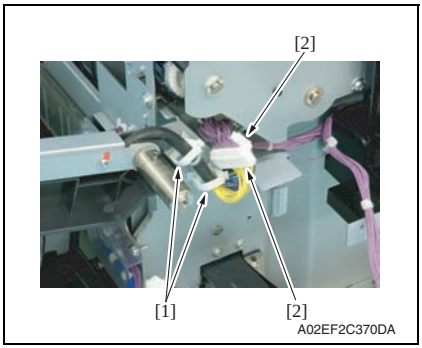

16. Remove two wire saddles [1] and two connectors [2].

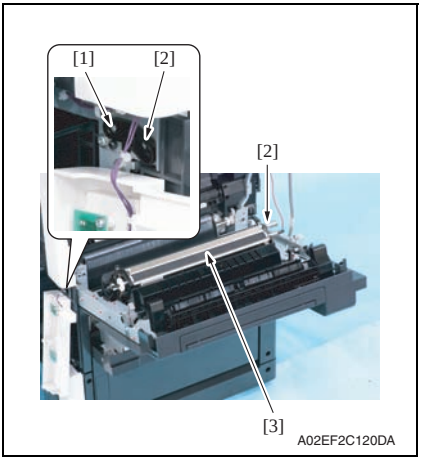

17. Remove the screw [1], and remove two shafts [2].
18. Remove the right door assy [3].

11.3.27 PH relay board (PHREYB)

1. Remove the front cover.
See P.103
2. Remove the transfer belt unit.
See P.40

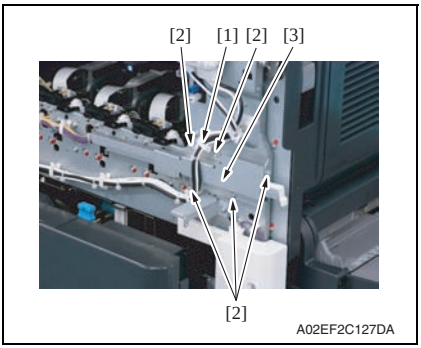

3. Remove the harness from the wire saddle [1].
4. Remove five screws [2], and remove the front handle assy [3].

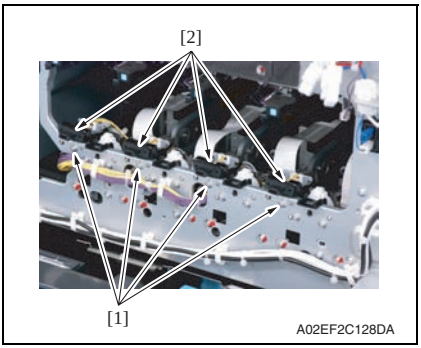

5. Remove the screw [1] each, and remove the imaging unit contact assy [2] of each color.

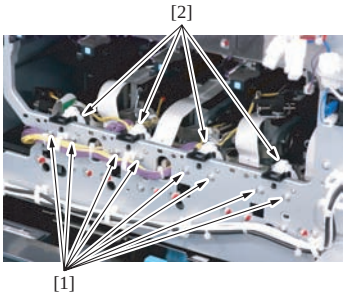

A02EF2C129DA

6. Remove two screws [1] each, and remove the imaging unit roll assy [2] of each color.

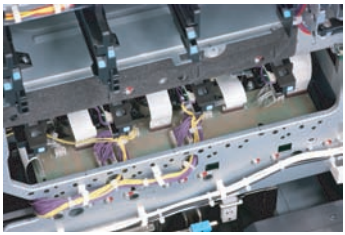

A02EF2C130DA

7. Remove all the connectors and the flat cables on the PH relay board.

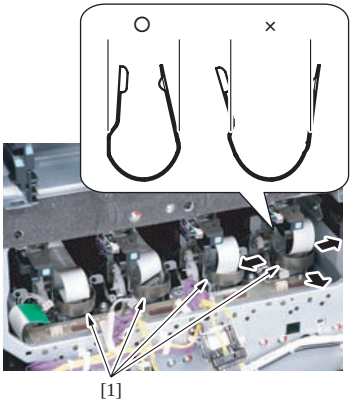

A02EF2C131DA

8. Remove the stopper [1] of the PH unit.

NOTE

- **When removing the stopper, use care so that both ends of the stopper will not open but stay parallel as shown on the left.**
  Keep using the stopper after once stretched out may cause uneven pitch or other image troubles.

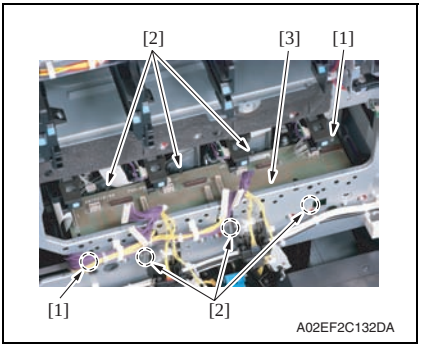

9. Remove two screws [1] and six tabs [2], and remove the PH relay board [3].

11.3.28 DC power supply (DCPU)

⚠ CAUTION

- **Remove the DC power supply after six minutes or more have passed since the power plug was disconnected.**

1. Remove the left cover.
See P.96
2. Remove the rear left cover.
See P.97

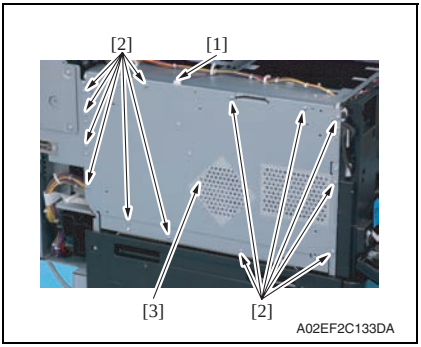

3. Disconnect the connector [1].
4. Remove thirteen screws [2], and remove the DC power supply protective shield [3].

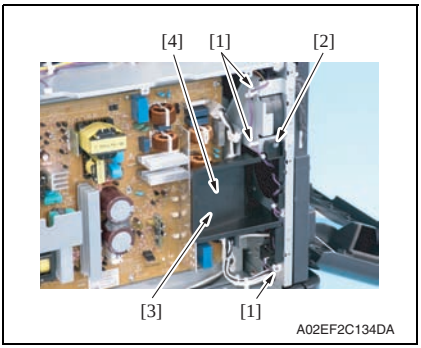

5. Remove the harness from three wire saddles [1].
6. Remove the harness from the cover [2].
7. Remove the screw [3], and remove the cover [4].

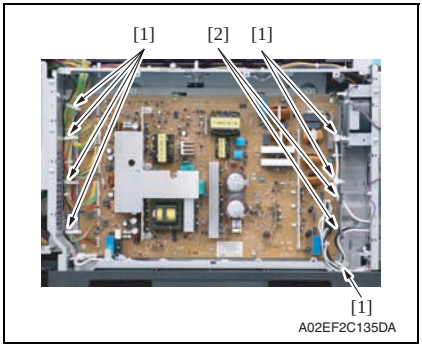

8. Remove the harness from seven wire saddles [1] and two edge covers [2].

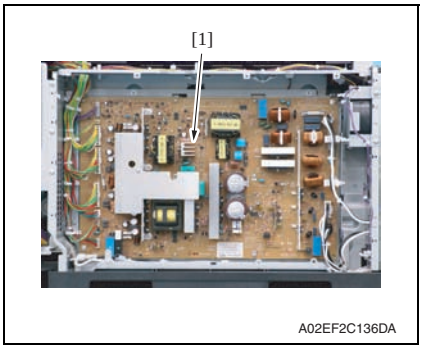

9. Remove all the connectors on the DC power supply [1].

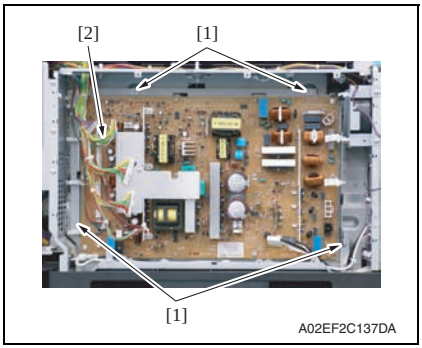

10. Remove four screws [1], and remove the DC power supply [2].

11.3.29 Printer control board (PRCB)

1. Open the front door.
2. Remove the rear left cover.
See P.97
3. Remove the upper rear cover.
See P.99

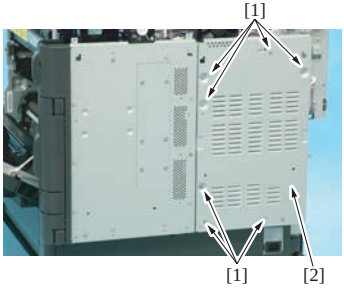

A02EF2C377DA

4. Remove seven screws [1], and remove the protective shield/2 [2].

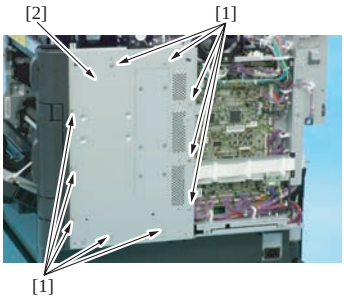

A02EF2C379DA

5. Remove ten screws [1], and remove the protective shield/1 [2].

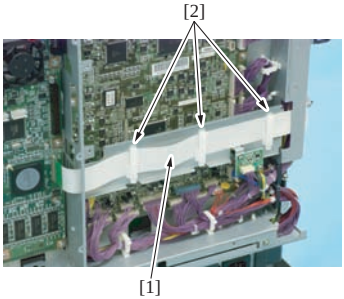

A02EF2C381DA

6. Disconnect the flat cable [1].
7. Remove the flat cable [1] from three cable holders [2] and get the flat cable out of the way.

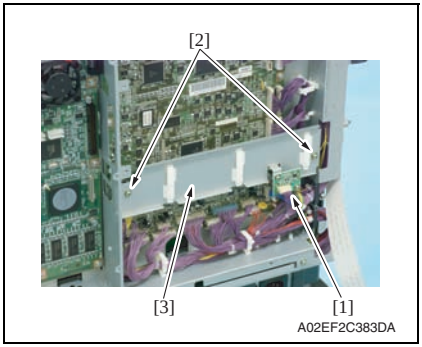

8. Disconnect the connector [1], remove two screws [2], and remove the metal plate [3].

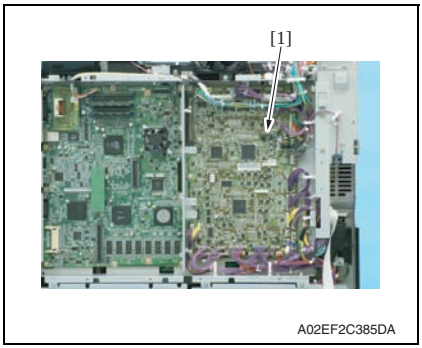

9. Remove all the connectors on the printer control board [1].

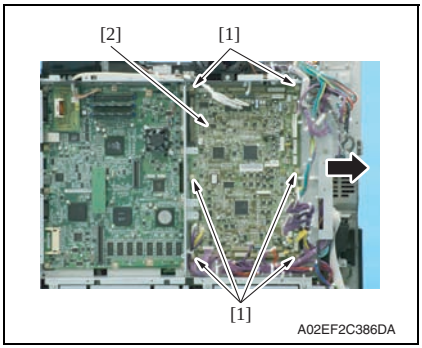

10. Remove six screws [1]. Slide the printer control board [2] in the direction of the arrow and remove it.

NOTE

- **When the printer control board is to be replaced, rewriting the firmware to the latest one.**

11.3.30 MFP board (MFPB)

1. Remove the rear left cover.
See P.97
2. Remove the upper rear cover.
See P.99
3. Remove the protective shield/1 and the protective shield/2.
See the steps 1 to 5 of printer control board removing procedure.
See P.126
4. Remove the rear right cover/1 and the rear right cover/2.
See P.98
5. Remove the NVRAM board.
See P.136
6. Remove the JMP board.
See P.135
7. Remove the SODIMM/1, SODIMM/2.
See P.135

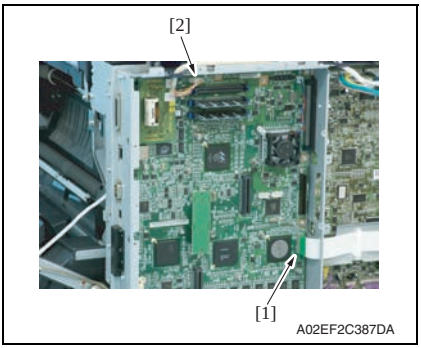

8. Disconnect the flat cable [1],and remove the connector [2].

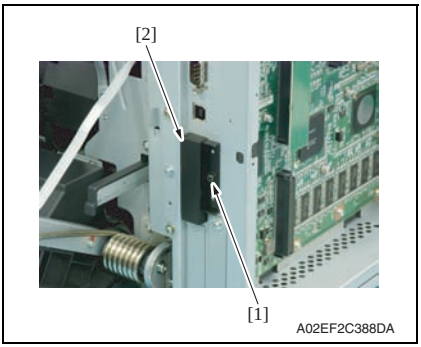

9. Remove the screw [1], and remove the cover [2].

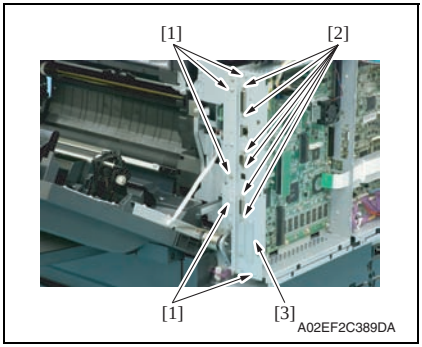

10. Remove five screws [1] and six bolts [2], and remove the metal plate [3].

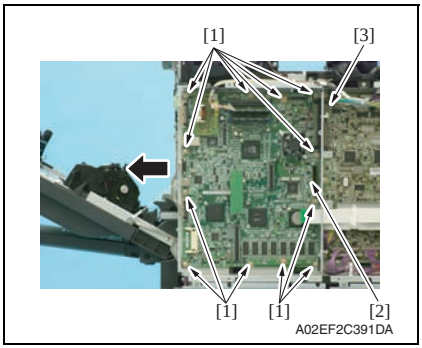

11. Remove twelve screws [1] of the MFP board.
12. Slide the MFP board [2] in the direction of the arrow, disconnect the connector [3], and remove the MFP board

NOTE

- **When the MFP board is to be replaced, rewriting the firmware to the latest one.**

11.3.31 PWB box

1. Remove the rear left cover.
See P.97
2. Remove the upper rear cover.
See P.99
3. Remove the rear right cover/1 and the rear right cover/2.
See P.98
4. Remove the lower rear cover/1 and the lower rear cover/2.
See P.100

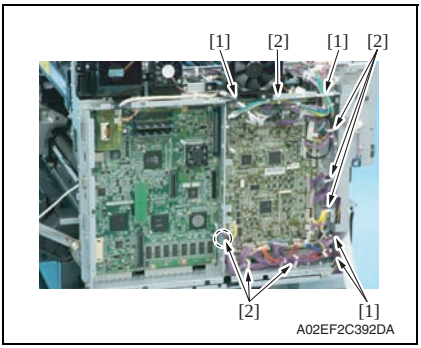

5. Remove the harness from four edge covers [1] and seven wire saddles [2].

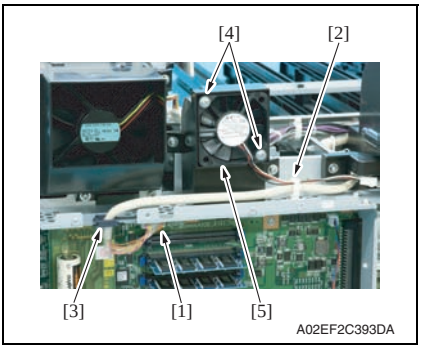

6. Disconnect the connector [1], and remove the harness from the wire saddle [2] and the edge cover [3].
7. Remove two screws [4], and remove the MFP board cooling fan motor [5].

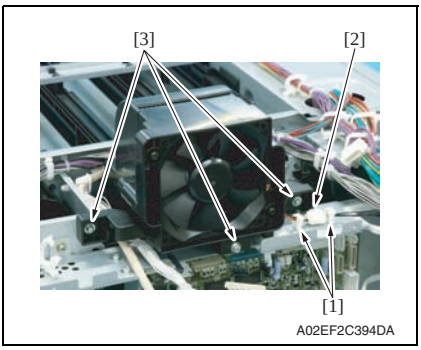

8. Remove the harness from two wire saddles [1], and disconnect the connector [2].
9. Remove three screws [3] of the cooling fan motor/2.

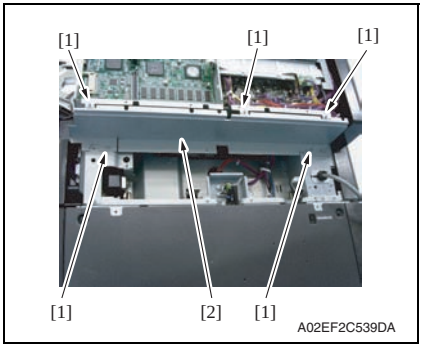

10. Remove five screws [1], and remove the metal plate [2].

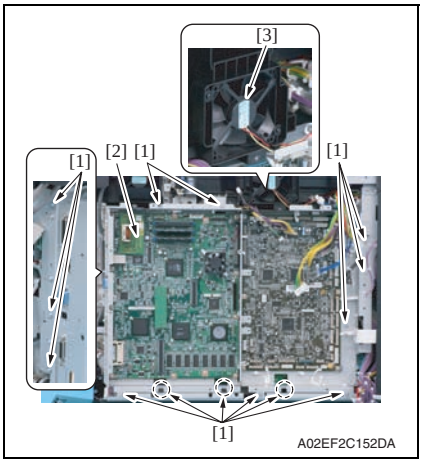

11. Remove eleven screws [1]. While raising the PWB box [2] a little, slide it to the left. Then, remove the cooling fan motor/2 [3].

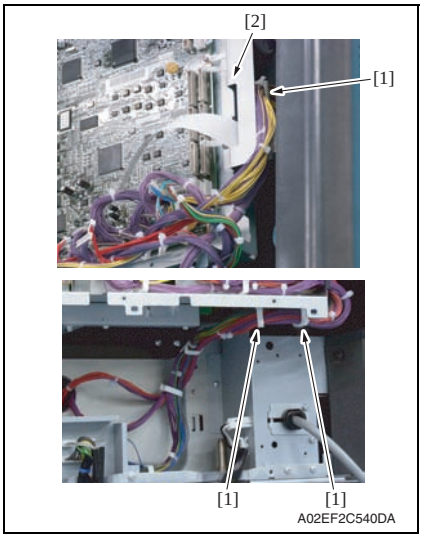

12. Remove the harness from the wire saddles [1], and remove the PWB box [2].

11.3.32 High voltage unit (HV)

1. Remove the PWB box
See P.130

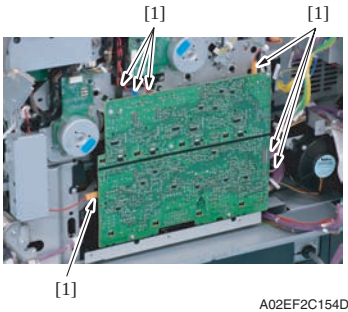

2. Disconnect seven connectors [1].

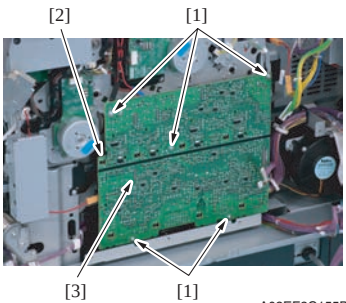

3. Remove five screws [1] and the tab [2], and remove the high voltage unit [3].

NOTE

- **When reinstalling the high voltage unit, make sure that the terminal end surely contacts.**

11.3.33 Service EEPROM board (SV ERB)

1. Remove the rear cover/1 and the rear cover/2
See P.99
2. Remove the protective shield/1 and the protective shield/2.
See the steps 1 to 5 of printer control board removing procedure.
See P.126

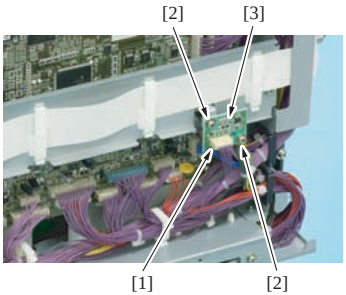

3. Remove two screws [2] and the connector [1], and take out the service EEPROM board [3].

NOTE
After replacing the service EEPROM board, all parts shown below are required to be replaced with new ones.
- **Imaging unit Y/M/C/K**
- **Toner cartridge Y/M/C/K**
- **Image transfer belt unit**
- **Fusing unit**

NOTE
- **When Service EEPROM is replaced, data of all adjustment settings stored in EEPROM disappear and the adjustment settings are returned to the default ones. After replacing the service EEPROM board, take the following steps to make readjustments.**

4. Turn ON the power switch.
5. Enter the service mode. Perform the adjustments and settings shown in the following table in the listed order from the PC that has the jig software installed. The readjusting and resetting work needs to be based on the machine maintenance list and adjustment lists that were output at the time of main body installation and maintenance visits.

NOTE
- **At this time, a front door must be an open state.**

Order	Items that require readjustment in the Service mode			Ref. page
1	Machine	Color Registration Adjustment	Cyan	P.313
2			Magenta	
3			Yellow	
4	Imaging Process Adjustment	TCR Level Setting		P.318
5		Background Voltage Margin		P.318
6		D Max Density		P.317
7		Dev. Bias Choice		P.321
8	System 1	Change Warm Up Time		P.344

Order	Items that require readjustment in the Service mode			Ref. page
9	Machine	Exhaust Fan Stop Delay		P.314
10	System 2	Unit Change	Warning Display	P.346
11	System 1	IU Life Setting		P.343

NOTE

- **After replacing the service EEPROM board, be sure to make the above listed adjustments before the first warm-up is made.**

6. Turn OFF the power switch.
7. Close the front door and turn ON the power switch.
Check to see that warm-up and image stabilization operations are completed normally.
8. Enter the Service mode again. Make individual adjustments shown in the following table in the order listed, using the machine management list and the adjustment lists that were output at the time of main body installation and maintenance.

Order	Items that require readjustment in the Service mode			Ref. page
1	Machine	LD adjustment	LD lightness balance adjust.	P.315
2		Manual Bypass Tray Adjustment		P.316
3		Printer Resist Loop		P.312
4		Fusing Temperature		P.305
5	Finisher	CB-FN adjustment	Fold&Staple Pos. Adjustment	P.376
6			Finisher Check	
7			Punch Regist Loop Size	
8			Punch Horizontal Position	
9	Machine	Printer Area	Paper Feed Direction Adj.	P.311
10		Fusing Transport Speed		P.306
11		Printer Area	Centering	P.308
12			Centering (Duplex 2nd Side)	P.310
13			Leading Edge Adjustment	P.307
14			Leading Edge Adj. (Duplex Side 2)	P.309
15	Imaging Process Adjustment	Transfer Output Fine Adjustment	Secondary transfer adj.	P.319
16			Primary transfer adj.	P.319

11.3.34 SODIMM/1, SODIMM/2

1. Remove the protective shield/1 and the protective shield/2.
See the steps 1 to 5 of printer control board removing procedure.
See P.126

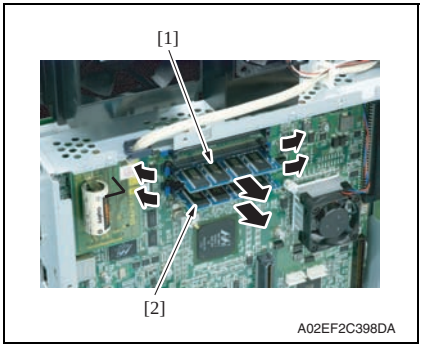

2. Remove the SODIMM/1 [1] and SODIMM/2 [2] on the MFP board.

11.3.35 JMP board (JMPB)

1. Remove the protective shield/1 and the protective shield/2.
See the steps 1 to 5 of printer control board removing procedure.
See P.126

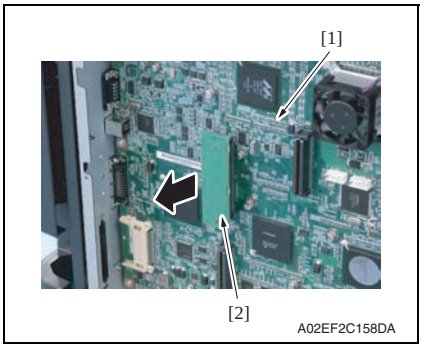

2. Remove the JMP board [2] on the MFP board [1].

11.3.36 NVRAM board (NRB)

1. Remove the protective shield/1 and the protective shield/2.
See the steps 1 to 5 of printer control board removing procedure.
See P.126

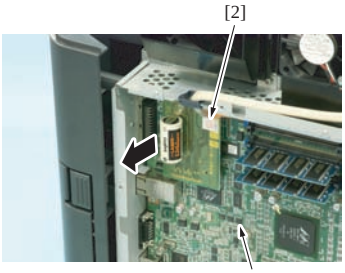

2. Remove the NVRAM board [2] on the MFP board [1].

11.3.37 Paper feed tray 1 paper FD size detect board (PSDTB/1)

1. Remove the paper feed tray 1.
See P.102
2. Remove the paper feed tray 2.
See P.102

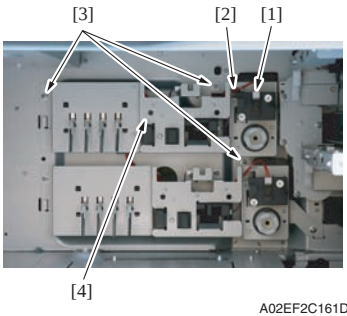

3. Disconnect the connector [1], and remove the harness from the edge cover [2].
4. Remove three screws [3], take out the paper feed tray 1 lift-up motor assy [4] and turn it around.

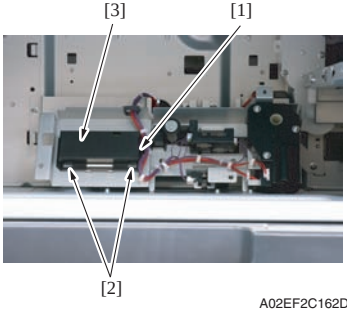

5. Disconnect the connector [1].
6. Unhook two tabs [2] and remove the paper feed tray 1 paper FD size detect board assy [3].

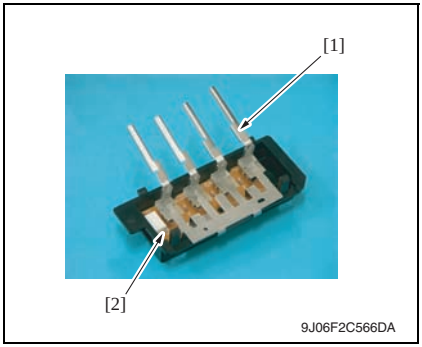

7. Remove the lever [1], and remove the paper feed tray 1 paper FD size detect board [2].

11.3.38 Paper feed tray 2 paper FD size detect board (PSDTB/2)

1. Remove the paper feed tray 1.
See P.102
2. Remove the paper feed tray 2.
See P.102

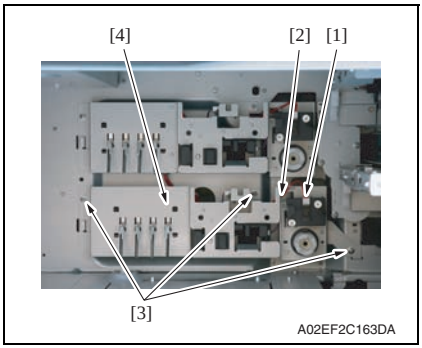

3. Disconnect the connector [1], and remove the harness from the edge cover [2].
4. Remove three screws [3], take out the paper feed tray 2 lift-up motor assy [4] and turn it around.

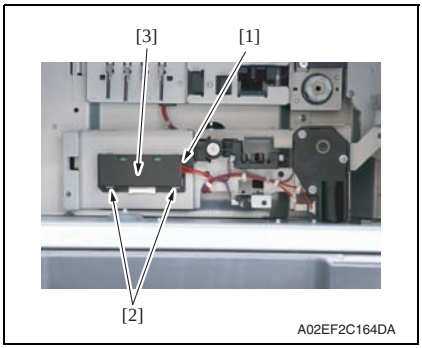

5. Disconnect the connector [1].
6. Unhook two tabs [2] and remove the paper feed tray 2 paper FD size detect board assy [3].

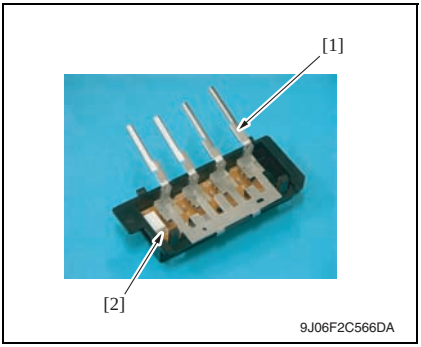

7. Remove the lever [1], and remove the paper feed tray 1 paper FD size detect board [2].

11.3.39 Transport motor (M1)

1. Remove the PWB box.
See P.130

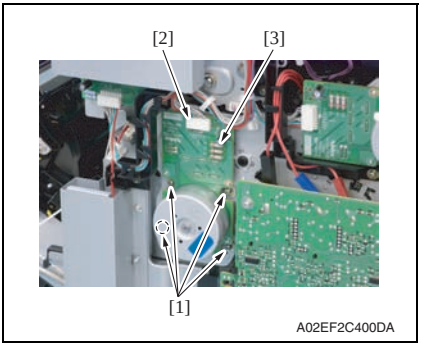

2. Remove four screws [1], disconnect the connector [2], and remove the transport motor [3].

11.3.40 Color PC motor (M2)

1. Remove the PWB box.
See P.130

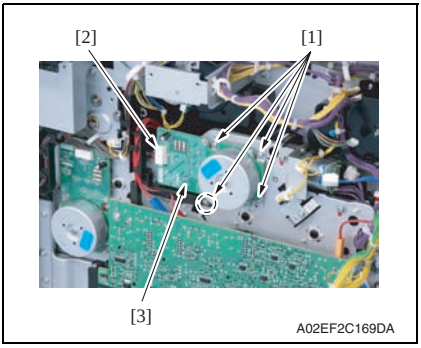

2. Remove four screws [1], disconnect the connector [2], and remove the color PC motor [3].

11.3.41 Fusing motor (M5)

1. Remove the PWB box.
See P.130

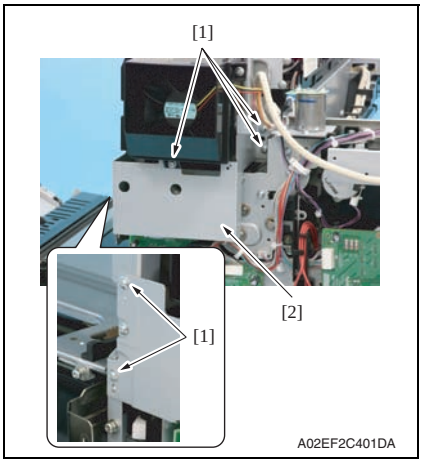

2. Remove five screws [1], and remove the bracket [2].

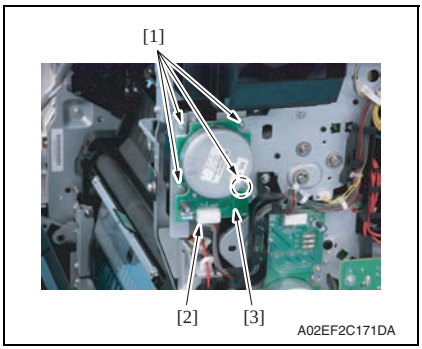

3. Remove four screws [1], disconnect the connector [2], and remove the fusing motor [3].

11.3.42 Switchback motor (M6)

1. Remove the upper rear cover.
See P.99
2. Remove the rear right cover/1.
See P.98
3. Remove the fusing drive unit.
See P.116

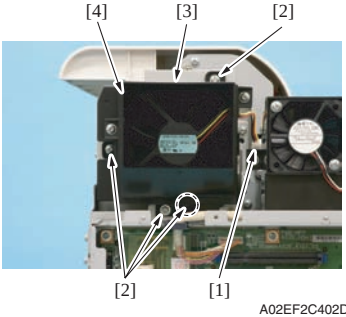

A02EF2C402DA

4. Disconnect the connector [1].
5. Remove four screws [2], unhook the tab [3], and remove the paper cooling fan motor assy [4].

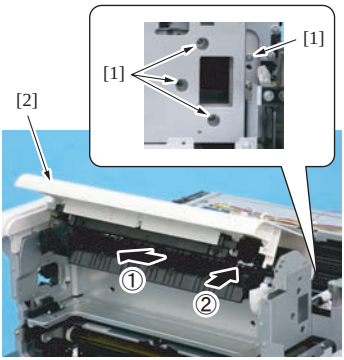

A02EF2C404DA

6. Remove four screws [1] and slide the paper exit section assy [2] in the direction of the arrow.

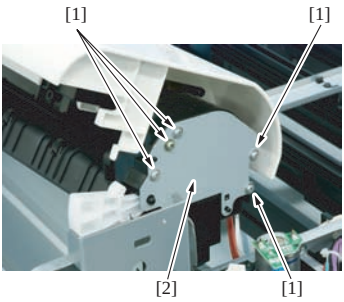

A02EF2C406DA

7. Remove five screws [1], and remove the metal plate [2].

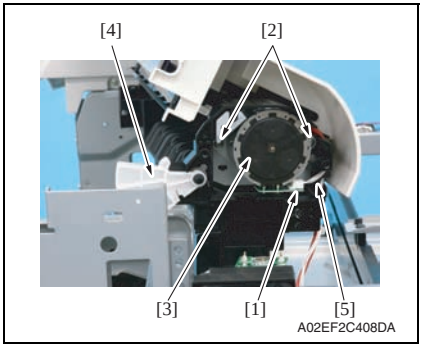

8. Disconnect the connector [1].
9. Remove two screws [2], and remove the switchback motor [3].

NOTE

- **Care should be taken to avoid letting the lever [4] hit the housing and be damaged.**
- **Care should be taken to prevent the harness wires [5] from being pulled loose or pulled out of the connector.**

11.3.43 Duplex transport motor (M7)

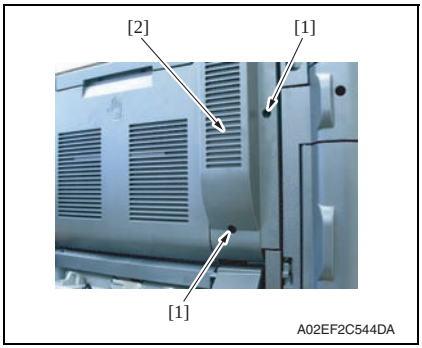

1. Remove two screws [1] and the duplex cover [2].

2. Open the right door.

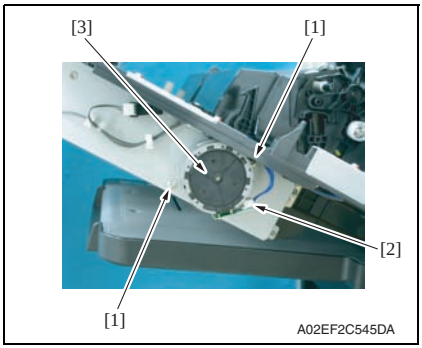

3. Remove two screws [1], disconnect the connector [2], and remove the duplex transport motor [3].

11.3.44 Fusing retraction motor (M12)

1. Remove the upper rear cover.
See P.99
2. Remove the protective shield/1 and the protective shield/2.
See the steps 1 to 5 of printer control board removing procedure.
See P.126

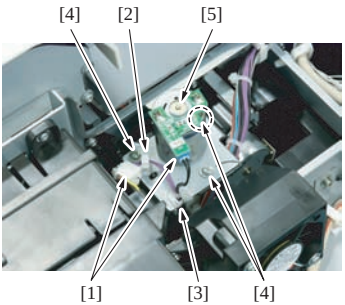

3. Disconnect two connectors [1].
4. Remove the harness from the wire saddle [2] and the edge cover [3].
5. Remove three screws [4] and remove the fusing retraction motor assy [5].

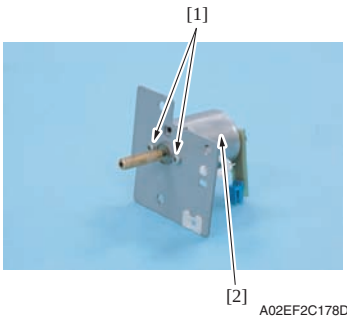

6. Remove two screws [1], and remove the fusing retraction motor [2].

11.3.45 Paper feed tray 1 lift-up motor (M8)

1. Remove the paper feed tray 1.
See P.102
2. Remove the paper feed tray 2.
See P.102
3. Remove the right front cover/2.
See P.94
4. Remove the lower rear cover/1 and the lower rear cover/2.
See P.100
5. Remove the protective shield/1 and the protective shield/2.
See the steps 1 to 5 of printer control board removing procedure.
See P.126

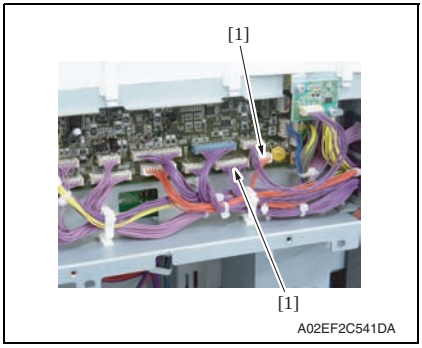

6. Disconnect two connectors (CN10, CN11) [1] on the printer control board.

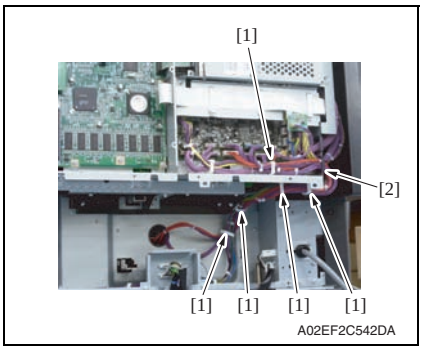

7. Remove the harness from five wire saddles [1] and the edge cover [2].

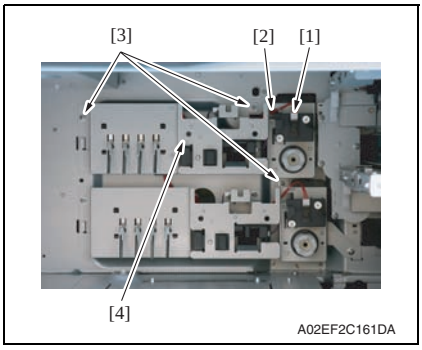

8. Disconnect the connector [1], and remove the harness from the edge cover [2].
9. Remove three screws [3], take out the paper feed tray 1 lift-up motor assy [4].

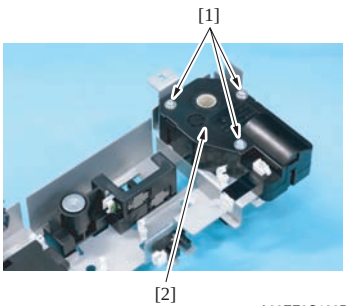

10. Remove three screws [1], and remove the paper feed tray 1 lift-up motor [2].

11.3.46 Paper feed tray 2 lift-up motor (M9)

1. Remove the paper feed tray 1.
See P.102
2. Remove the paper feed tray 2.
See P.102
3. Remove the right front cover/2.
See P.94
4. Remove the lower rear cover/1 and the lower rear cover/2.
See P.100
5. Remove the protective shield/1 and the protective shield/2.
See the steps 1 to 5 of printer control board removing procedure.
See P.126

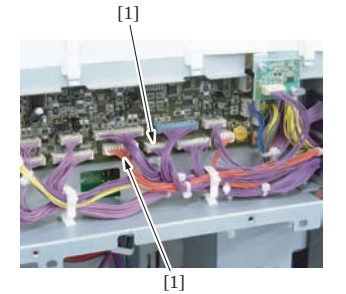

6. Disconnect two connectors (CN7, CN8) [1] on the printer control board

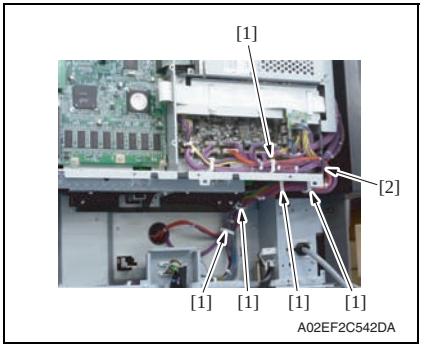

7. Remove the harness from five wire saddles [1] and the edge cover [2].

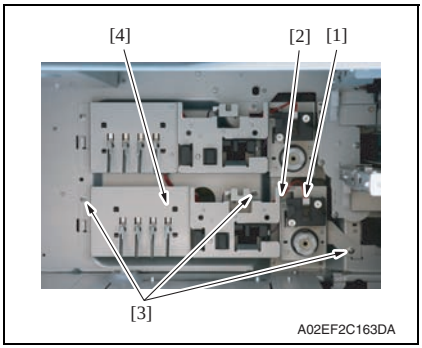

8. Disconnect the connector [1], and remove the harness from the edge cover [2].

9. Remove three screws [3], take out the paper feed tray 2 lift-up motor assy [4].

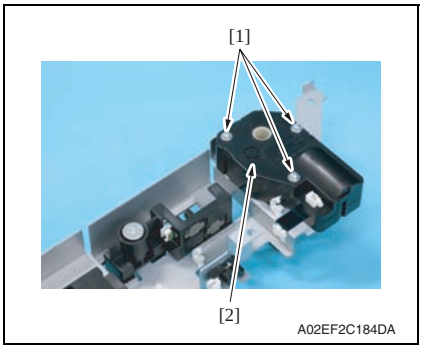

10. Remove three screws [1], and remove the paper feed tray 2 lift-up motor [2].

11.3.47 Toner supply motor/CK (M3)

1. Remove the PWB box.
See P.130

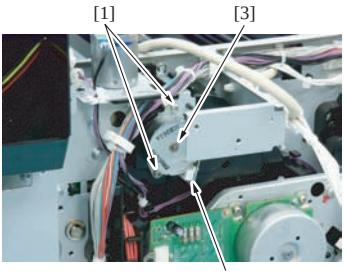

2. Disconnect the connector [2], remove two screws [1], and remove the toner supply motor/CK [3].

11.3.48 Toner supply motor/YM (M4)

1. Remove the PWB box.
See P.130

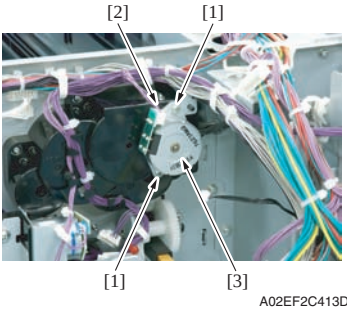

2. Disconnect the connector [2], remove two screws [1], and remove the toner supply motor/YM [3].

11.3.49 Paper feed tray 1 paper feed clutch (CL1)

1. Remove the paper feed tray 1 paper feed assy.
See the steps 1 to 4 of paper feed tray 1 feed roller/paper feed tray 1 pick-up roller removing procedure.
See P.21

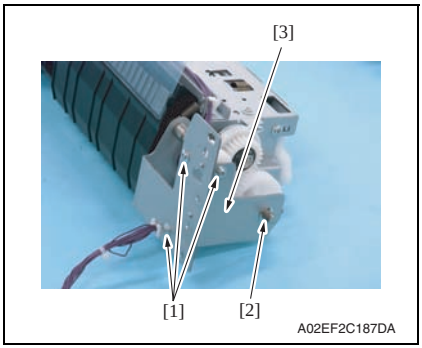

2. Remove three screws [1] and the E-ring [2], and remove the metal plate [3].

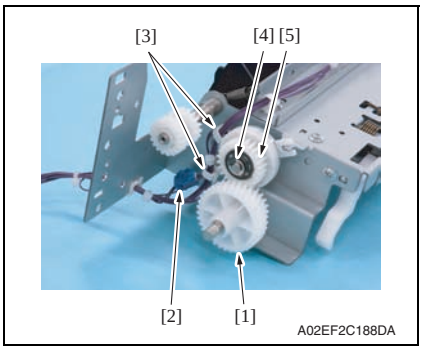

3. Remove the gear [1].
4. Disconnect the connector [2], and remove the harness from the wire saddles [3].
5. Remove the E-ring [4], and remove the paper feed tray 1 paper feed clutch [5].

NOTE

- **When mounting the paper feed tray 1 paper feed clutch [5], set the convex part of the stopper into the concave part of the paper feed tray 1 paper feed clutch.**

11.3.50 Paper feed tray 2 vertical transport clutch (CL3)

1. Remove the paper feed tray 2 paper feed assy.
See the steps 1 to 5 of paper feed tray 2 feed roller/paper feed tray 2 pick-up roller removing procedure.
See P.25

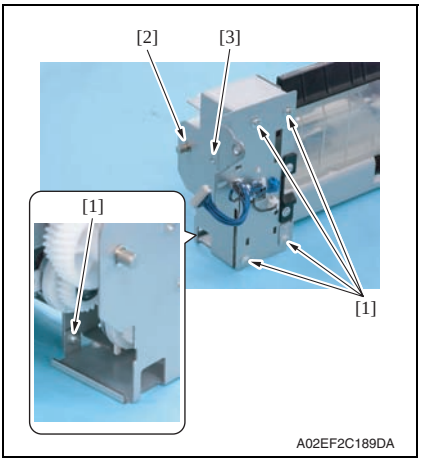

2. Remove five screws [1] and the E-ring [2], and remove the metal plate [3].

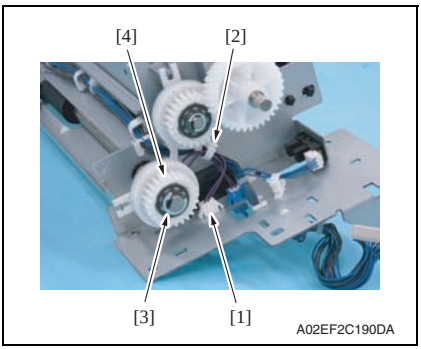

3. Disconnect the connector [1], and remove the harness from the wire saddle [2].
4. Remove the E-ring [3], and remove the paper feed tray 2 vertical transport clutch [4].

NOTE

- **When mounting the paper feed tray 2 vertical transport clutch [4], set the convex part of the stopper into the concave part of the paper feed tray 2 vertical transport clutch.**

11.3.51 Paper feed tray 2 paper feed clutch (CL2)

1. Remove the tray 2 paper feed assy.
See the steps 1 to 5 of paper feed tray 2 feed roller/paper feed tray 2 pick-up roller removing procedure.
See P.25

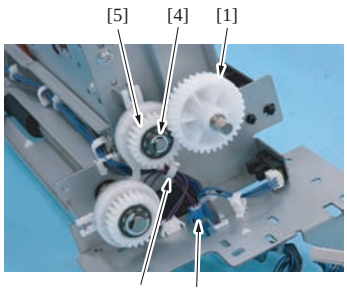

2. Remove the gear [1].
3. Disconnect the connector [2], and remove the harness from the wire saddle [3].
4. Remove the E-ring [4], and remove the paper feed tray 2 paper feed clutch [5].

NOTE

- **When mounting the paper feed tray 2 paper feed clutch [5], set the convex part of the stopper into the concave part of the paper feed tray 2 paper feed clutch.**

11.3.52 Manual paper feed clutch (CL4)

1. Remove the manual bypass tray unit.
See P.110

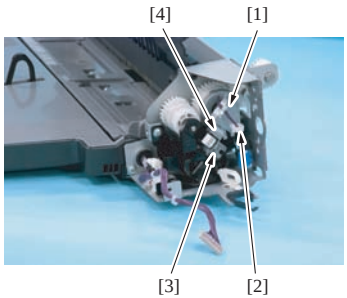

2. Remove the harness from the edge cover [1] and the wire saddle [2], and remove the screw [3].
3. Remove the metal plate [4].

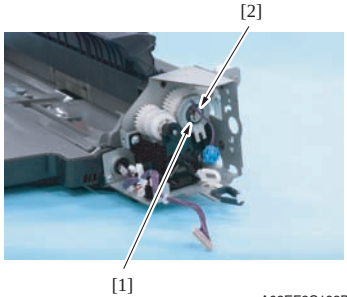

4. Remove the E-ring [1], and remove the manual paper feed clutch [2].

NOTE

- **When mounting the manual paper feed clutch [2], set the convex part of the stopper into the concave part of the manual paper feed clutch.**

11.3.53 Transfer belt retraction clutch (CL7)

1. Remove the fusing drive unit.
See P.116

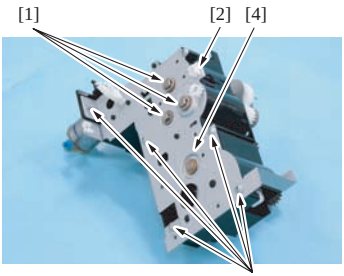

A02EF2C195DA

2. Disconnect the connector [2], remove three E-rings [1] and five screws [3], and remove the metal plate [4].

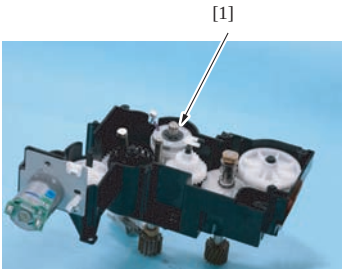

A02EF2C196DA

3. Remove the transfer belt retraction clutch [1].

11.3.54 Developing clutch/K (CL5)

1. Remove the high voltage unit.
See P.132

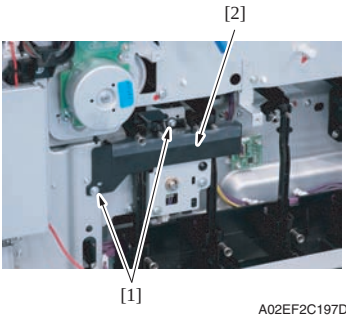

A02EF2C197DA

2. Remove two screws [1], and remove the rear handle cover. [2].

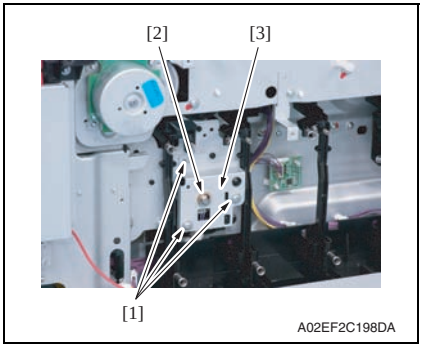

3. Remove three screws [1] and the E-ring [2], and remove the developing clutch/K cover [3].

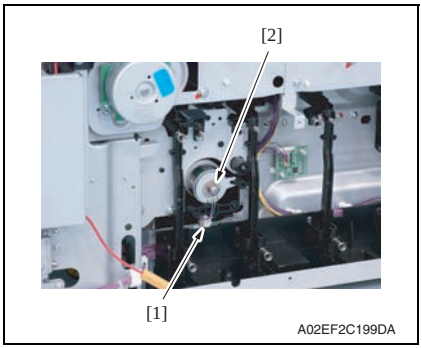

4. Disconnect the connector [1], and remove the developing clutch/K [2].

11.3.55 Tim. roller clutch (CL6)

1. Remove the vertical transport unit.
See the steps 1 to 7 of IDC registration sensor removing procedure.
See P.152

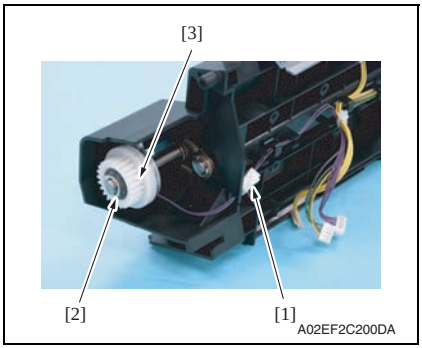

2. Disconnect the connector [1], remove the E-ring [2], and remove the tim. roller clutch [3].

11.3.56 IDC registration sensor/MK (IDCS/MK), IDC registration sensor/YC (IDCS/YC)

1. Remove the transfer belt unit.
See P.40
2. Remove the manual bypass tray unit.
See P.110

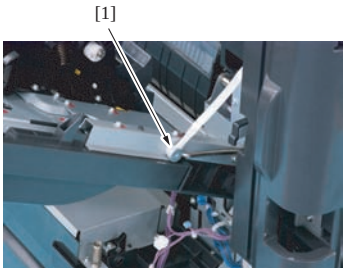

A02EF2C201DA

3. Remove the shoulder screw [1].

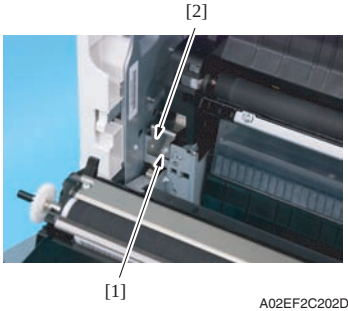

A02EF2C202DA

4. Remove the screw [1], and remove the plate spring [2].

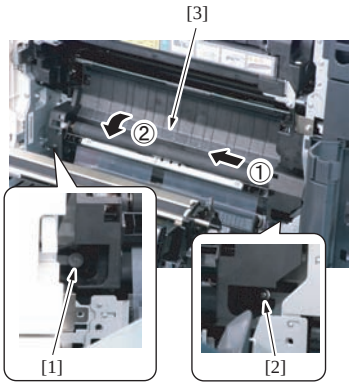

A02EF2C203DA

5. Remove the shoulder screw [1] and the screw [2].
6. Remove the vertical transport unit [3] as shown in the left illustration.

NOTE

- **Since multiple connectors are connected to the backside of the vertical transport assy, do not pull it by force.**

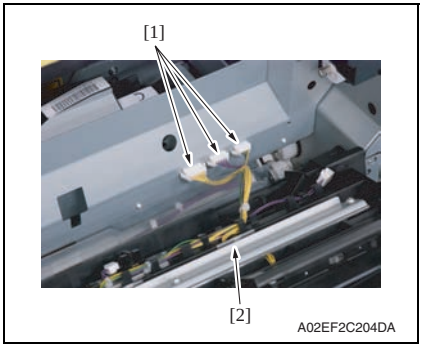

7. Disconnect three connectors [1], and remove the vertical transport unit [2].

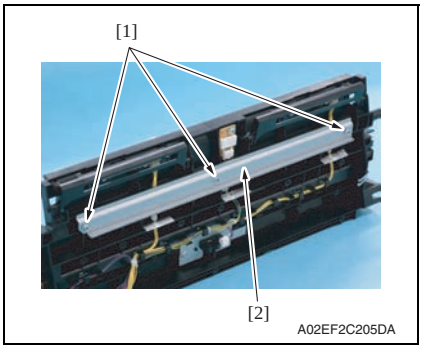

8. Remove three screws [1], and remove the metal plate [2].

NOTE

- **Both end screws has a spacer. Remove the screws, being careful not to drop the spacers.**

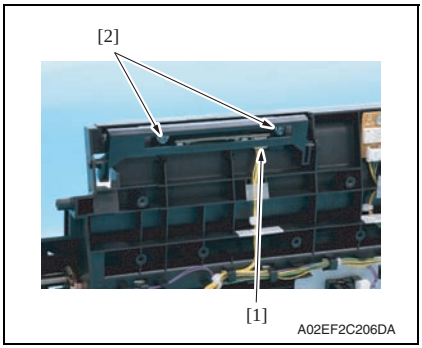

9. Disconnect the connector [1], remove two screws [2], and remove the IDC registration sensor/MK.

10. Repeat steps 8 to 9 to remove IDC registration sensor/YC.

11.4 Cleaning procedure

NOTE

- **The alcohol described in the cleaning procedure represents the ethanol isopropyl alcohol.**

11.4.1 Transfer belt unit

1. Remove the transfer belt unit.
See P.40

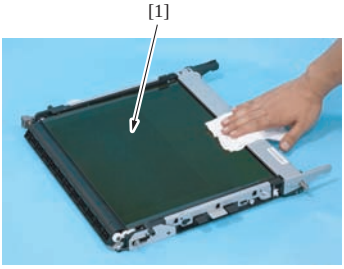

2. Using a cleaning pad, wipe the transfer belt [1].

NOTE

- **Do not wipe out with water.**
- **Do not wipe out with any solvents.**

11.4.2 PH window Y,M,C,K

1. Open the front door.

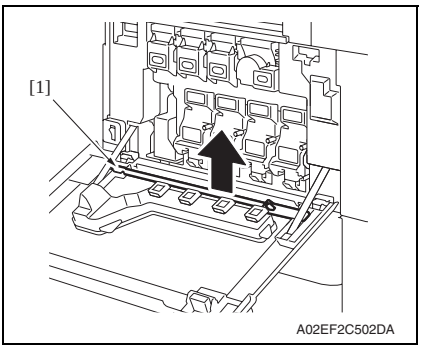

2. Remove the PH window cleaning jig [1] from the front door.

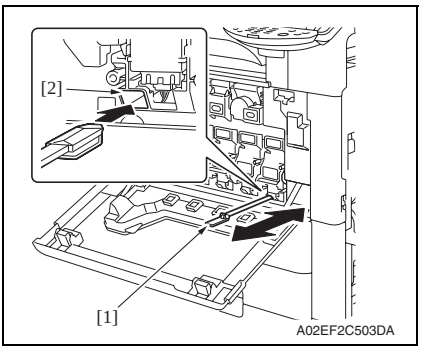

3. Insert the PH window cleaning jig [1] to the cleaning port [2] and clean it by putting the jig back and forth a couple times.

NOTE

- **Clean every PH window of Y,M,C,K.**

11.4.3 Paper feed tray 1 feed roller, paper feed tray 1 pick-up roller, paper feed tray 1 separation roller

1. Remove the paper feed tray 1 paper feed assy.
See the steps 1 to 4 of paper feed tray 1 feed roller/paper feed tray 1 pick-up roller removing procedure.
See P.21

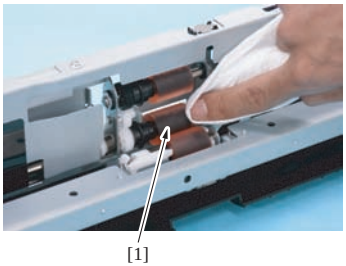

A02EF2C208DA

2. Using a cleaning pad dampened with alcohol, wipe the paper feed tray 1 feed roller [1] clean of dirt.

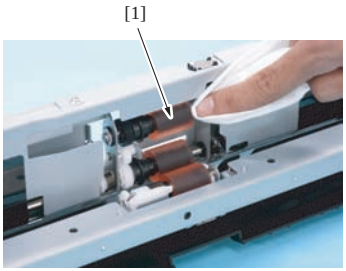

A02EF2C209DA

3. Using a cleaning pad dampened with alcohol, wipe the paper feed tray 1 pick-up roller [1] clean of dirt.

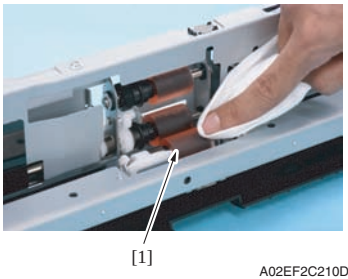

A02EF2C210DA

4. Using a cleaning pad dampened with alcohol, wipe the paper feed tray 1 separation roller [1] clean of dirt.

11.4.4 Paper feed tray 2 feed roller, paper feed tray 2 pick-up roller, paper feed tray 1 separation roller

1. Remove the paper feed tray 2 paper feed assy.
See the steps 1 to 5 of paper feed tray 2 feed roller / paper feed tray 2 pick-up roller removing procedure.
See P.25

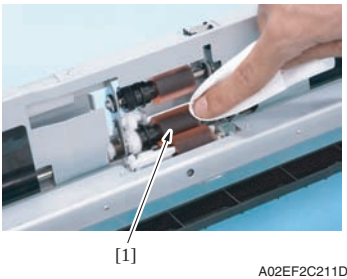

A02EF2C211DA

2. Using a cleaning pad dampened with alcohol, wipe the paper feed tray 2 feed roller [1] clean of dirt.

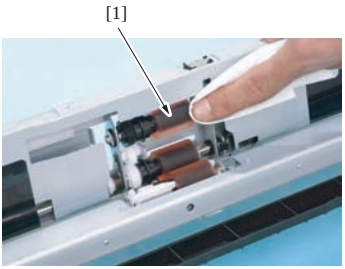

A02EF2C212DA

3. Using a cleaning pad dampened with alcohol, wipe the paper feed tray 2 pick-up roller [1] clean of dirt.

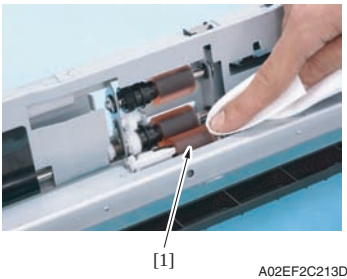

A02EF2C213DA

4. Using a cleaning pad dampened with alcohol, wipe the paper feed tray 2 separation roller [1] clean of dirt.

11.4.5 Paper feed tray 2 transport roller

1. Open the vertical transport door.

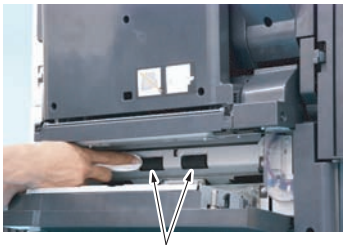

2. Using a cleaning pad dampened with alcohol, wipe the tray 2 transport roller [1] clean of dirt.

11.4.6 Manual bypass tray feed roller

1. Remove the manual bypass tray unit.
See P.110

2. Using a cleaning pad dampened with alcohol, wipe the manual bypass tray feed roller [1] clean of dirt.

11.4.7 Manual bypass tray separation roller

1. Remove the manual bypass tray separation roller assy.
See P.31

2. Using a cleaning pad dampened with alcohol, wipe the manual bypass tray separation roller [1] clean of dirt.

Blank Page

Adjustment/Setting

12. How to use the adjustment section

- "Adjustment/Setting" contains detailed information on the adjustment items and procedures for this machine.
- Throughout this "Adjustment/Setting," the default settings are indicated by " ".

Advance checks

- Before attempting to solve the customer problem, the following advance checks must be made. Check to see if:

- The power supply voltage meets the specifications.
- The power supply is properly grounded.
- The machine shares the power supply with any other machine that draws large current intermittently (e.g., elevator and air conditioner that generate electric noise).
- The installation site is environmentally appropriate: high temperature, high humidity, direct sunlight, ventilation, etc.; levelness of the installation site.
- The defective image attributes to the data itself which is sent from the PC to the printer.
- The density is properly selected.
- Correct paper is being used for printing.
- The units, parts, and supplies used for printing (developer, PC drum, etc.) are properly replenished and replaced when they reach the end of their useful service life.
- Toner is not running out.

⚠ CAUTION

- **To unplug the power cord of the machine before starting the service job procedures.**
- **If it is unavoidably necessary to service the machine with its power turned ON, use utmost care not to be caught in the scanner cables or gears of the exposure unit.**
- **Special care should be used when handling the fusing unit which can be extremely hot.**
- **The developing unit has a strong magnetic field. Keep watches and measuring instruments away from it.**
- **Take care not to damage the PC drum with a tool or similar device.**
- **Do not touch IC pins with bare hands.**

13. Utility Mode

13.1 Control Panel

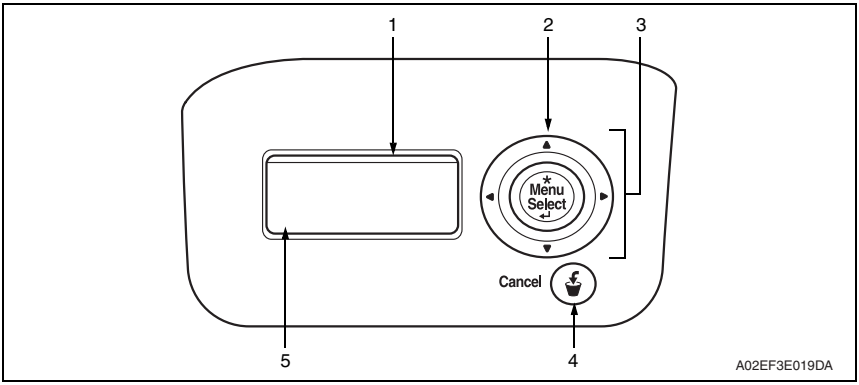

No.	Name	Description	
1	LED line	The machine's current status is indicated by the color and lighting/flashing of the indicator. Flashing in blue: Printing normally Lit in blue: Operable, printable Flashing in red: Warning Lit in red: Inoperable (Stopping operating)	
2	Menu/Select key	• Pressing this key will display the function menu. • The currently selected option will be decided to proceed to the next menu.	
3	Cursor keys (Hereinafter shown as ◀ ▲ ▶ ▼)	◀	• Pressing this key while entering the letters will delete the letters left side of the cursor.
		▲	• Pressing this key while the menu is being displayed will return it to the previous option or the previous setting item. • Pressing this key while entering letters will display the previous letter.
		▶	• Pressing this key will display each setting menu. • It will move the cursor to the right side for the next input position.
		▼	• Pressing this key while displaying the menu will display the next option or the next setting item. • Pressing this key while entering the letters will display the next letter.
4	Cancel key	• Pressing this key will finish changing the settings and return to the "Ready to Print" screen. • Pressing this key while printing will stop printing or job precessing.	
5	Display panel	• Displays information about the current status. • It turns OFF when the printer controller is OFF or running.	

13.2 Utility Mode function tree

* The function tree is shown to comply with the format displayed on the screen.

NOTE

- **Keys displayed on screens are different depending on the setting.**
- **The keys with * marks need to be entered only when using the user authentication or account track, or both.**
- **For displaying the keys with ** marks, see "Admin.Sec.Levels."**
  See P.207

Utility Mode						Ref. page
Main Menu						
Meter Count						P.169
Job Operation	User Name *	User Password *	Account Name *	Account Password *	Public User Box	P.169
					Personal User Box	P.169
					Account User Box	P.169
					Secure Print Box	P.169
					Annotation UserBox	P.170
					Encrypted PDFBox	P.170
					Touch&Print Box	P.170
					Proof Print	P.170
Paper Settings	Bypass					P.171
	Tray 1					P.171
	Tray 2					P.171
	Tray 3					P.171
	Tray 4					P.172
User Settings	Print Reports					P.173
	Consumables					P.176
	System Settings	Language Setting				P.176
		PowerSave Setting **	Low Power Setting **			P.176
			SleepMode Setting **			P.177
			EnteringSleepMode			P.177
			EnteringPowerSave			P.177
		PaperTray Setting	AutoTraySelection			P.177
			Tray Priority			P.177
			Auto Tray Switch			P.178
			No Matching Paper			P.178
		Output Settings	Print/Fax Output **			P.178
			Blank Page Print **			P.178
			Output Tray **			P.178
			Shift Each Job			P.179

Utility Mode					Ref. page
User Settings	System Settings	Output Settings	Bin Assignment **	Tray 1 to Bin 5	P.179
				Tray 2 to Bin 6	
	Printer Settings	Basic Settings	PDL Setting		P.179
			Number of Copies		P.179
			OriginalDirection		P.179
			Spool Setting		P.180
			Paper Size Switch		P.180
			Banner Sheet		P.180
			BindingPos.Adjust		P.180
		Paper Settings	Paper Tray		P.181
			Paper Size		P.181
			2-Sided Print		P.181
			Binding Position		P.181
			Staple		P.181
			Punch		P.182
			Banner Paper Tray		P.182
		PCL Settings	Font Setting		P.182
			Symbol Set		P.182
			Font Size	Scalable Font	P.182
				Bitmap Font	
			pitch		P.183
			CR/LF Mapping		P.183
		PS Settings	Print PS Errors		P.183
			Set ICC Profile		P.183
		XPS Setting	Verify XPS Sign.		P.184
System Settings	System Settings	Date/Time Settings	Date Setting		P.185
			Time Setting		
			Time Zone Setting		
			Time Adjustment		
		Daylight Saving	DST Setting		P.185
			Saving Time		
		LCD Brightness			P.185
		Manage-ment List	Job Settings List		P.185
			Counter List		P.186
		System Auto Reset	SysAutoReset Set		P.186
			SysAutoReset Time		
	Network Settings	TCP/IP	TCP/IP Setting		P.186
			IP Setting	ApplicationMethod	P.187
				Manual Input	
				Auto Setting	

Utility Mode						Ref. page
System Settings	Network Settings	TCP/IP	IPv6	IPv6 Setting		P.187
				Auto IPv6 Setting		
				Global Address		
				Prefix Length		
				Gateway Address		
				LinkLocal Address		
			DNS Server	ServerAutoObtain		P.188
				PriorityDNSServer		
				Secondary DNS 1		
				Secondary DNS 2		
			IP Filtering	IP Filter(Permit)		P.188
				IP Filter(Deny)		
			IPsec	IPsec Setting		P.188
				IKE Setting		
				SA Setting		
				peer		
			RAW Port Number			P.191
			Host Name			P.191
			DNS Domain			P.192
			DynamicDNSSetting			P.192
		NetWare	IPX	IPX Setting		P.192
				EthernetFrameType		
			NetWarePrint Mode			P.193
			NetWare Print	Pserver	Print Server Name	P.193
					Print Server PW	
					Polling Interval	P.193
					Bindery/NDS Set	P.193
					File Server Name	P.193
					NDS Context Name	P.193
					NDS Tree Name	P.194
				Nprinter/ Rprinter	Print Server Name	P.194
					Auto Setting	P.194
					Printer Number	P.194
			UserAuth.Set NDS			P.194
		HTTP Server	HTTPServerSetting			P.194
			PSWC Setting			P.194
			IPP Setting			P.195

Utility Mode						Ref. page
System Settings	Network Settings	HTTP Server	IPP Auth. Setting	Auth. Method		P.195
				User Name		P.195
				Password		P.195
				realm		P.195
			Accept IPP jobs			P.195
			Support Info.	Print Job		P.195
				Valid Job		
				Cancel Job		
				OpenJobAttributes		
				Open Job		
				PrinterAttributes		
			Printer Info.			P.196
		SMB	Print Setting	Print Setting		P.196
				NetBIOS Name		P.196
				PrintService Name		P.196
				Workgroup		P.196
			WINS	WINS Setting		P.196
				AutoRetrieval Set		P.197
				WINS Server Add1		P.197
				WINS Server Add2		
				Node Type Setting		P.197
			Direct Hosting			P.197
		Web Service	WebService Setting	Friendly Name		P.197
				SSL Setting		P.198
			Printer Settings	Print Function		P.198
				Printer Name		P.198
				Printer Location		P.198
				Printer Info.		P.198
		SNMP	SNMP Setting			P.199
			SNMP v1/v2c(IP)			
			SNMP v3(IP)			
			SNMP v1(IPX)			
			UDP Port Number			P.199
			SNMPv1/ v2cSetting	Read Community		P.199
				Write Setting		
				Write Community		
			SNMP v3 Setting	Context Name		P.199
				Discovery User		P.200
				DiscoveryUserName		P.200
				ReadUser Settings	Read User Name	P.200
					Security Level	P.200

Utility Mode						Ref. page
System Settings	Network Settings	SNMP	SNMP v3 Setting	ReadUser Settings	Auth-password	P.200
					Priv-password	
				WriteUser Settings	Write User Name	P.201
					Security Level	P.201
					Auth-password	P.201
					Priv-password	
				Encrypt Algorithm		P.201
				Auth. Method		P.201
			TRAP Settings	TRAP Settings		P.202
				TRAPwhenAuthFails		P.202
		AppleTalk	AppleTalk Setting			P.202
			Printer Name			P.202
			Zone Name			P.202
		Bonjour	Bonjour Setting			P.202
			Bonjour Name			P.203
		TCP Socket	TCP Socket	Port Setting		P.203
				SSL/TLS Setting		
				PortNumberSetting		
			TCP Socket ASCII	Port Setting		P.203
				Port Number		
		Detail Settings	Network Speed			P.204
			Time Adjustment Set	NTP Setting		P.204
				NTP ServerAddress		P.204
				Port Number		P.204
			When InvalidCert.			P.204
			PING Confirmation	PING TX Address		P.205
				Check Connection		
	Printer Settings	USB Timeout				P.205
		Network Timeout				P.205
		Print XPS Errors				P.205
	System Connection	OpenAPI Settings	Access Setting			P.205
			Enable SSL			P.206
			Authentication	Auth. Settings		P.206
				Auth. Login Name		
				Auth. Password		
			PortNumber Setting	Port Number		P.206
				Port Number (SSL)		
		CallRemoteCenter				P.206
Admin. Settings	Security Settings	Admin. Password				P.207
		Admin.Sec.Levels				P.207
		Security Details	Password Rules			P.207

Utility Mode					Ref. page
Admin. Settings	Security Settings	Security Details	Prohibit Functions	Mode Setting	P.208
				#of Auth Attempts	
				Release	
				Release Time	
			SecurePrintAccess		P.209
			PrintDataCapture		P.209
			DeleteJobHistory		P.209
			Audit Log	Audit Log Setting	P.210
				OverwriteAuditLog	
				Delete Audit Log	
		EnhancedSecurity			P.210
		HDD Settings	Format HDD		P.212
			CheckHDDCapacity		P.212
			OverwriteAllArea		P.212
			Overwrite HDDdata		P.213
			OverwritePriority		P.213
			RegisterHDDLockPW		P.214
			HDD EncryptionSet		P.214
		Driver Encryption	EncryptionSetting		P.215
			EncryptPassphrase		
	User Box Settings	Delete User Box			P.215
		DeleteSecurePrint			P.215
		Delete Time	Secure PrintBox		P.215
			EncryptedPDFBox		P.216
			Touch&PrintBox		P.216
		Doc.Hold Setting			P.216
	AuthDevice Setting	CardAuth. Settings	IC Card Type		P.216
			Operating Setting		
		BioAuth. Settings	Beep Sound		P.216
			Operating Setting		
		Touch&Print	Touch&PrintUserBox		P.217
			Print		
	Expert Adjustment	Printer Adjustment	Leading Edge Adj.		P.217
			Centering		P.218
			Leading(Duplex)		P.219
			Centering(Duplex)		P.220
			Vertical Adj.		P.221
			EraseLeadingEdge		P.221
		Finisher Adjust	Center Staple Pos		P.222
			Half-Fold Pos.		

Utility Mode				Ref. page
Admin. Settings	Expert Adjustment	Density Adjustment	Thick/Yellow	P.222
			Thick/Magenta	
			Thick/Cyan	
			Thick/Black	
			BlackImageDensity	P.222
		Stabilization	Initialize+Stabi.	P.222
			StabilizationOnly	P.223
		ColorRegistration		P.224
		Test Pattern	Gradation Pattern	P.225
			Halftone Pattern	P.225
Banner Printing				P.225

13.3 Utility Mode function setting procedure

13.3.1 Procedure

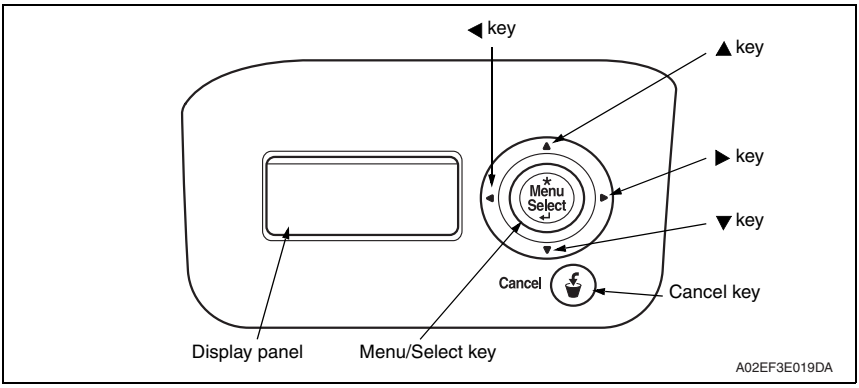

A. Job Operation

1. Make sure that the default screen (Ready to Print) is being displayed, and press the Menu/Select key on the control panel.
2. Press ▶ key to open the user name screen.
3. Enter the user name using ▲, ▼, ▶, and ◀ keys.
4. Press the Menu/Select key and set the user name.
5. Enter the user password using ▲, ▼, ▶, and ◀ keys.
6. Press the Menu/Select key and set the user password.
7. Press ▶ key to open the account name screen.
8. Enter the account name using ▲, ▼, ▶, and ◀ keys.
9. Press the Menu/Select key and set the account name.
10. Enter the account password using ▲, ▼, ▶, and ◀ keys.
11. Press the Menu/Select key and set the account password.
12. Display the item to be changed using ▲, and ▼ keys.
13. Press the Menu/Select key to set the item to be changed.

B. Paper Settings

1. Make sure that the default screen (Ready to Print) is being displayed, and press the Menu/Select key on the control panel.
2. Display the paper tray using ▲, and ▼ keys.
3. Press ▶ key to shift to the next digit.
4. Display the item to be changed using ▲, ▼, and ▶ keys.
5. Press the Menu/Select key to set the item to be changed.

13.3.2 Cancelling the settings

- Press the Cancel key.

13.3.3 Changing the settings on the setting menu

1. Enter the target value using ▲, ▼keys.
2. Press ▶ key to shift to the next digit.
3. Enter the target value using ▲, ▼ key.
4. Repeat the steps 2 and 3 to enter all the necessary items.
5. Press the Menu/Select key to enter the setting.

13.4 Meter Count

- The function is not available if No. 60 is “Disabled”, or “Enabled” but the serial number is yet to be entered, as accessed through [Service Mode] → [System Settings] → [SoftwareSWSetting].

Functions User	• To produce an output of the Meter Count list.
Setting/ Procedure	*1.* Select [Meter Count]. *2.* Select 1-Sided Print or 2-Sided Print and press the Menu/Select key to produce an output of the list.

13.5 Settings in job operation

- When user authentication or account track is being performed, the user name, user password, account name and account password need to be entered.
- The user authentication and account track cannot be set on the control panel. User the PageScope Web Connection.

A. Public User Box

Function/User	• To print or delete the document saved in the Public User Box.
Setting/ Procedure	*1.* Select the box to be used. *2.* Enter the “password” of the box to be used. *3.* Select the specific document to be used. *4.* Select “Print” or “Delete” and press the Menu/Select key.

B. Personal User Box

Function/User	• To print or delete the document saved in the Personal User Box.
Setting/ Procedure	*1.* Select the box to be used. *2.* Enter the “password” of the box to be used. *3.* Select the specific document to be used. *4.* Select “Print” or “Delete” and press the Menu/Select key.

C. Account User Box

Function/User	• To print or delete the document saved in the Account User Box.
Setting/ Procedure	*1.* Select the box to be used. *2.* Enter the “password” of the box to be used. *3.* Select the specific document to be used. *4.* Select “Print” or “Delete” and press the Menu/Select key.

D. Secure Print Box

Function/User	• To print or delete the document saved in the Secure Print Box.
Setting/ Procedure	*1.* Enter the “ID” of the secure document. *2.* Enter the “password” of the secure document to be used. *3.* Select the specific secure document to be used. *4.* Select “Print” or “Delete” and press the Menu/Select key.

E. Annotation User Box

Function/User	• To print or delete the document saved in the Annotation User Box.
Setting/ Procedure	*1.* Select the box to be used. *2.* Enter the “password” of the box to be used. *3.* Select the specific document to be used. *4.* Select “Print” or “Delete” and press the Menu/Select key.

F. Encrypted PDF Box

Function/User	• To print or delete the document saved in the Encrypted PDF Box.
Setting/ Procedure	*1.* Select the specific document to be used. *2.* Select “Print” or “Delete” and press the Menu/Select key.

G. Touch & Print Box

Function/User	• To print or delete the document saved in the Touch & Print Box.
Setting/ Procedure	*1.* Select the specific document to be used. *2.* Select “Print” or “Delete” and press the Menu/Select key.

H. Proof Print

Function/User	• To print or delete the document saved in the Proof Print.
Setting/ Procedure	*1.* Select the specific document to be used. *2.* Select “Print” or “Delete” and press the Menu/Select key.

13.6 Settings in Paper Tray

- It sets the paper type of for each tray.

A. Bypass

Functions Use	• To set the paper size and paper type for the paper loaded in the bypass.
Setting/ Procedure	<Paper Size> • The default setting is Auto Detect. <Paper Type> • The default setting is Plain Paper.

B. Tray 1

Functions Use	• To set the paper type of the paper loaded in tray 1. • Set wide paper size only when wide paper is to be used.
Setting/ Procedure	<Wide Paper Size> • The default setting is OFF. <Paper Type> • The default setting is Plain Paper.

C. Tray 2

Functions Use	• To set the paper type of the paper loaded in tray 2. • Set wide paper size only when wide paper is to be used. • [Paper Size] is displayed if the paper size detected is 12 x 18.
Setting/ Procedure	<Paper Size> • The default setting is Auto Detect. <Wide Paper Size> • The default setting is OFF. <Paper Type> • The default setting is Plain Paper.

D. Tray 3

Functions Use	• To set the paper type of the paper loaded in tray 3. • Set wide paper size only when wide paper is to be used.
Setting/ Procedure	<Wide Paper Size> • The default setting is OFF. <Paper Type> • The default setting is Plain Paper.

E. Tray 4

Functions Use	• To set the paper type of the paper loaded in tray 4. • The function is not available when the LCT is mounted. • Set wide paper size only when wide paper is to be used.
Setting/ Procedure	<Wide Paper Size> • The default setting is OFF. <Paper Type> • The default setting is Plain Paper.

13.7 User setting function setting procedure

13.7.1 Print Reports

Functions	• To output the report or Demo Page concerning the print setting.
Use	• To check the setting concerning the printer. • The types of report available for output are as follows. Configuration : The list of printer setting will be output. GDI Demo Page : The test page will be output. Statistics Page : The list of printer use status will be output. Consumable Info, Periodic Replacement Parts, Counter Information, Paper Information, Coverage Information PS Font List : PS font list will be output. PCL Font List : PCL font list will be output. Meter Count : The total counter of various types will be output. Consumables : The life counter of consumables will be output.
Setting/ Procedure	*1.* Select [User Settings] → [Print Reports]. *2.* Select the report to be output. *3.* Select 1-Sided Print or 2-Sided Print and press the Menu/Select key to produce an output of the list.

A. Statistics Page

(1) Consumable Info

- Display the estimated percent of life remaining in the toner cartridge and print unit.
- Display the status of the waste toner bottle and the staple unit.

NOTE

- **The percent of life remaining in the toner cartridge or print unit can be used as a guide, but may not exactly reflect the amount that has been used in the toner cartridge or print unit.**

(2) Periodic Replacement Parts

- Display the estimated percent of life remaining in periodic replacement parts and units such as the transfer belt and fusing unit.

(3) Counter Information/Paper Information

- The total number of pages that have been printed is counted and displayed based on the description shown in the following table.

<Counter information list>

Types of count		Contents	Count timing
Total Count	Full color	• The total number of color pages ejected from the printer. Increment by one per simplex and by two per duplex	When a sheet of media is ejected properly
	Monochrome	• The total number of monochrome pages ejected from the printer. Increment by one per simplex and by two per duplex	
	2 Color	• The total number of 2 color pages ejected from the printer. Increment by one per simplex and by two per duplex	
	Total	• The cumulative number of printed pages fed out. Increment by one per simplex and by two per duplex	
Total Count (duplex)	Total	• The cumulative number of 2-sided printed pages fed out. Increment by one per duplex (and by zero per simplex)	
Sheets Printed by Paper Size		• The number of sheets used for each media size. Increment by one for both simplex and duplex	When a sheet of media is fed
Sheets Printed by Paper Type		• The number of pages used per each media type. Increment by one for both simplex and duplex	

NOTE

- **The total counters and the print counters count at a different timing, when a sheet of media is properly ejected and when a sheet of media is fed, respectively. Therefore, the sum of each total counter value may not be same with the sum of each print counter value if a sheet of media cannot be ejected due to media jam inside the machine or other possible problems.**

(4) Coverage Information

- Each coverage information is calculated and displayed based on the description shown in the following table.

<Coverage information list>

Coverage information	Contents
Current Coverage <Current Toner Cartridge>	• Individual average dot coverage of four colors (YMCK) in the current toner cartridges is calculated on an A4 basis. (The average of the ratios of dot space on each page when the printable area is defined as 100% and shown in 0.1 percent increments)
Total Coverage <Total>	• Individual average dot coverage of four colors (YMCK) is calculated on an A4 basis for all prints performed after the printer was installed. (The average of the ratios of dot space on each page when the printable area is defined as 100% and shown in 0.1 percent increments)
CMYK Coverage	• Average dot coverage is calculated on an A4 basis for full color printing performed after the printer was installed. (The average of the ratios of dot space on each page when the printable area is defined as 100% and shown in 0.1 percent increments)
Monochrome Coverage	• Average dot coverage is calculated on an A4 basis for monochrome printing performed after the printer was installed. (The average of the ratios of dot space on each page when the printable area is defined as 100% and shown in 0.1 percent increments)

NOTE

- **Coverage information can be used as a guide and may not completely reflect the actual amount of toner used.**

(5) How to read consumable/periodic replacement parts (units) counter information.

- The lower left part of the statistics page shows numerical values that represent consumable/periodic replacement parts (units) counter information.
  The table below explains counter information that is provided by each numerical data.

<Display on the statistics page>

00/00/00/00	07J12

<Meaning of counter value> (From the left of the numerical values)

No.	Contents	
1	Number of times a Standard-capacity toner cartridge (K) or print unit (K) has been replaced	
2	Number of times a Standard-capacity toner cartridge (C) or print unit (C) has been replaced	
3	Number of times a Standard-capacity toner cartridge (M) or print unit (M) has been replaced	
4	Number of times a Standard-capacity toner cartridge (Y) or print unit (Y) has been replaced	
1	Start date of use *1	Year (e.g. The year 2007 is displayed as 07.)
2		Month (e.g. January is displayed as A. February is B. March is C. And December is L.)
3		Day (e.g. The day 12 is displayed as 12.)

*1: Start date of use begins when 100 prints are complete after the first new toner cartridge was detected following the main body installation.

13.7.2 Consumables

Functions Use	• To show the consumed level of the consumables.

13.7.3 System Settings

A. Language Setting

Functions	• To select the language on the LCD display.
Use	• To change the language on the control panel to another language.
Setting/ Procedure	• The language options depend on the marketing area selected in [Destination] available from [System Settings] under Service Mode.

B. Power Save Setting

(1) Low Power Setting

Functions	• To set the time until low power starts operating after the last key operation has been completed. • Low power: To turn LED and LCD OFF, and lower the power consumption.
Use	• To change the time until low power starts.
Setting/ Procedure	• The default setting is 015 Minute(s). "015 Minute(s)" (002 to 240)

(2) Sleep Mode Setting

Functions	• To select whether or not to allow entry into the sleep mode.
Use	• "Restrict" will only be displayed when [Don't go to Sleep] in Service Mode is set.
Setting/ Procedure	• The default setting is ON. "ON" OFF

(3) Entering Sleep Mode

Functions	• To set the time until sleep mode starts operating after the last key operation has been completed. • Turn all lines OFF except 5 V line for control.
Use	• To change the time until the sleep mode starts. • The function is available only if [SleepMode Setting] is set to "ON," as accessed through [User Settings] → [System Settings] → [PowerSave Setting] → [SleepMode Setting].
Setting/ Procedure	• The default setting is 020 Minute(s). "020 Minute(s)" (002 to 240)

(4) Entering Power Save

Functions	• To set whether to immediately switch to the power save mode after printing.
Use	• To immediately switch to the power save mode after printing. Normal : Switches to the power save mode according to the normal power save mode after the printing. Immediately : Switches to the power save mode immediately after the printing.
Setting/ Procedure	• The default setting is Immediately. Normal "Immediately"

C. Paper Tray Setting

(1) Auto Tray Selection

Functions	• To set the tray for automatic selection when APS is being set.
Use	• To specify the tray to be used when APS is being set.
Setting/ Procedure	• Select the tray on the [AutoTraySelection] screen.

(2) Tray Priority

Functions	• To establish the priority for switching the tray when ATS is being set.
Use	• To establish the priority of the tray when ATS is being set.
Setting/ Procedure	• Set the priority on the [Tray Priority] screen.

(3) Auto Tray Switch

Functions	• To set whether to automatically switch to another tray with same size paper when the paper feed tray runs out of paper during printing.
Use	• To switch the paper feed tray automatically.
Setting/ Procedure	• The default setting is OFF. ON "OFF"

(4) No Matching Paper

Functions Use	• To set whether to switch to another tray automatically when the specified tray runs out of paper during printing. Stop Printing : It stops printing when the specified tray runs out of paper. Switch Trays : To switch to another tray with the specified paper and print when the tray is out of paper
Setting/ Procedure	• The default setting is Stop Printing. "Stop Printing" Switch Trays

D. Output Settings

(1) Print/Fax Output

Functions	• To set the timing for printing for the PC print job received.
Use	Page Print : Starts printing every time data for each page are received Batch Print : Starts printing when all data are received
Setting/ Procedure	• The default setting is Page Print. "Page Print" Batch Print

(2) Blank Page Print

Functions	• Select wether or not to print the stamp/composition on blank pages.
Use	• To print a stamp/composition on blank pages.
Setting/ Procedure	• The default setting is Do Not Print. Print "Do Not Print"

(3) Output Tray

• It will be displayed only when the optional finisher FS-519 is mounted.

Functions	• To set the priority output tray.
Use	• To change the prior output tray according to the application.
Setting/ Procedure	• The default settings is Finisher Tray 1. "Finisher Tray 1" Finisher Tray 2 Finisher Tray 3

(4) Shift Each Job

⚠ • It will be displayed only when the optional finisher FS-519 or FS-609 is mounted.

Functions	• To set whether to offset each job when paper is printed using the finisher or job separator.
Use	• Some paper type may fail to be discharged or get deteriorated loading when large volume prints are printed using the finisher or job separator. This function is used to print large volume prints when finisher or job separator is mounted. (When this function is set to “OFF”, the paper is discharged without offsetting the paper to the center of the tray.)
Setting/ Procedure	• The default setting is ON. “ON” OFF

(5) Bin Assignment

• It will be displayed only when the optional mailbin kit MT-502 is mounted.

Functions	• Assign the tray 1 of the finisher to the mailbin 5, and the tray 2 to the mailbin 6. • The tray 2 can be assigned when the optional exit tray OT-602 is mounted.
Use	• Use when assigning the tray 1 and the tray 2 of the finisher to the mailbins.
Setting/ Procedure	• The default setting is Don’t Set. Set “Don’t Set”

13.7.4 Printer Settings

A. Basic Settings

(1) PDL Setting

Functions	• To set the PDL (Page Description Language) for PC printing.
Use	• To fix the PDL as necessary. It usually switches automatically.
Setting/ Procedure	• The default setting is Auto. “Auto” PCL PS

(2) Number of Copies

Functions	• To set the number to be copied when not specified by the printer driver during PC printing.
Use	• To use when the number cannot be specified by the printer driver during printing from Windows DOS, etc.
Setting/ Procedure	• The default setting is 001 copies. “001 copies” (001 to 999)

(3) Original Direction

Functions	• To set the default setting for the direction of the original during PC printing.
Use	
Setting/ Procedure	• The default setting is Portrait. “Portrait” Landscape

(4) Spool Setting

Functions	• To set whether to store the print data to HDD when receiving the next job during RIP process of the current job.
Use	
Setting/ Procedure	• The default setting is ON. "ON" OFF

(5) Paper Size Switch

Functions	• To set whether to switch between A4 and Letter (8 $^1/_2$ x 11) size paper, and A3 and Ledger (11 x 17) size paper in reading.
Use	• To output Letter (8 $^1/_2$ x 11) size document to A4 size, and Ledger (11 x 17) size document to A3 size. • To output A4 size document to Letter (8 $^1/_2$ x 11) size, and A3 size document to Ledger (11 x 17) size. **NOTE** **• When switching the size, the image will be printed in the same magnification.** **• The image will not be reduced when there is image deficiency.**
Setting/ Procedure	• The default setting is OFF. ON "OFF"

(6) Banner Sheet

Functions	• To set whether or not to print on the banner (front cover) page.
Use	• To use when the banner (front cover) page is to be printed.
Setting/ Procedure	• The default setting is OFF. ON "OFF"

(7) Binding Pos. Adjust

Functions	• Specifies the alignment between the sides of paper (binding position adjustment) in duplex printing.
Use	• To achieve faster printing performance, select Productivity. To address misalignment problems between sides of prints in the horizontal and vertical directions, select Finishing. Finishing : Able to optimize sides aligning operation as the process is performed after the machine receives all of the print data. Productivity : Able to accelerate print speed as sides alignment proceeds together with data reception and print operation. ControlAdjustment : Comply with the command from the printer driver and does not take the side alignment step.
Setting/ Procedure	• The default setting is Finishing. "Finishing" Productivity ControlAdjustment

B. Paper Settings

(1) Paper Tray

Functions	• To set the paper feed tray when not specified by the printer driver during PC printing.
Use	• To use when paper feed tray cannot be specified by the printer driver when printing from Windows DOS, etc.
Setting/ Procedure	• The default setting is Auto.

(2) Paper Size

Functions	• To set the paper size when not specified by the printer diver during printing.
Use	• To use when the paper size cannot be specified by the printer driver during printing from Windows DOS, etc.

(3) 2-Sided Print

Functions	• To set whether to carry out duplex print during PC printing when not specified by the printer driver.
Use	• To use when 2-sided printing cannot be specified by the printer driver while printing by Windows DOS, etc.
Setting/ Procedure	• The default setting is OFF. ON “OFF”

(4) Binding Position

Functions	• To set the binding direction during duplex printing when not specified by the printer driver during PC printing.
Use	• To use when binding direction cannot be specified by the printer driver during printing by Windows DOS, etc.
Setting/ Procedure	• The default setting is Left Bind. Top Bind “Left Bind” Right Bind

(5) Staple

⚠1 • The menu is available only when the optional finisher FS-519 or FS-609 is mounted.

Functions	• To set whether to staple or not when not specified by the printer driver during PC printing.
Use	• To use hen staple is not specified by the printer driver during printing by the Windows DOS, etc.
Setting/ Procedure	• The default setting is OFF. 1 Position 2 Positions “OFF”

(6) Punch

⚠1 • The menu is available only when the optional finisher FS-519/FS-609 and punch kit PK-515/PK-501 is mounted.

Functions	• To select whether to make punch-holes or not when not specified by the printer driver during PC printing.
Use	• To use when the printer driver cannot specify punching during printing from Windows DOS, etc.
Setting/ Procedure	• The default setting is OFF. 2-Hole/3-Hole/4-Hole "OFF" * The number of punch holes being set is available from [Service Mode] → [Finisher Adjust] → [Punch Option].

(7) Banner Paper Tray

Functions	• To set the feed tray for printing on the banner (front cover) page.
Use	• To set the feed tray for printing on the banner (front cover) page.
Setting/ Procedure	• The default setting is Auto.

C. PCL Settings

(1) Font Setting

Functions	• To set the font when not specified by the printer driver during PC printing.
Use	• To use when the printer driver cannot specify the font during printing from Windows DOS, etc. • It can be selected from the Resident font or the download font.
Setting/ Procedure	• The default setting is 000.

(2) Symbol Set

Functions	• To set the font symbol set when not specified by the printer driver during PC printing.
Use	• To use when the font symbol set cannot be specified by the printer driver during printing from Windows DOS, etc.
Setting/ Procedure	• The default setting is Roman-8.

(3) Font Size

Functions	• To set the font size when not specified by the printer driver during PC printing.
Use	• To set the font size when it cannot be specified by the printer driver during printing from Windows DOS, etc. • To set scalable font (: Point) and bitmap font (: Pitch) respectively.
Setting/ Procedure	• The default setting is Scalable Font : 012.00 points Bitmap Font : 10.00 pitch

(4) Pitch

Functions	• To set the number of lines per page for printing the text data.
Use	• To change the number of lines per page for printing the text data.
Setting/ Procedure	• Default setting value differs depending on the values by the following two different settings. [User Settings] → [Printer Settings] → [Basic Settings] → [OriginalDirection] [User Settings] → [Printer Settings] → [Paper Settings] → [Paper Size] "060 lines" (005 to 128)

(5) CR/LF Mapping

Functions	• To set the mode for replacing data when printing the text data.
Use	• To change the mode for replacing data when printing the text data.
Setting/ Procedure	• The default setting is CR=CR LF=LF. "CR=CR LF=LF" CR=CRLF LF=LF CR=CR LF=CRLF CR=CRLF LF=CRLF

D. PS Settings

(1) Print PS Errors

Functions	• To set whether to print or not the error information when an error occurred during PS rasterizing.
Use	• To print the information concerning the postscript error.
Setting/ Procedure	• The default setting is OFF. ON "OFF"

(2) Set ICC Profile

Functions	• To select a profile to be used for print jobs from a computer when a profile is not specified by printer driver.
Use	• Possible to set a profile separately for each of the following items. Photo-RGB Color Photo-Output Text-RGB Color Text-Output FTG-RGB Color FTG-Output SimulationProfile
Setting/ Procedure	• The default settings are shown below. Photo-RGB Color : Device Color Photo-Output : Auto Text-RGB Color : Device Color Text-Output : Auto FTG-RGB Color : Device Color FTG-Output : Auto SimulationProfile : None

E. XPS Setting

(1) Verify XPS Sign.

Functions Use	• Selects whether to verify digital signatures attached to XPS (XML Paper Specification) files when printing the files. • When digital signature verification is selected, files with invalid digital signatures are not printed.
Setting/ Procedure	• The default setting is OFF. ON “OFF”

13.8 System settings function setting procedure

13.8.1 System Settings

A. Date/Time Settings

Functions	• To set the date/time and the time zone to start the clock.
Use	• To change settings concerning the date/time. • This setting should be carried out for set up.
Setting/ Procedure	• For time zone, set the time difference with the world standard time. • Setting range for the time zone: -12:00 to +12:00 (by 30 minutes) • When the following setting is set to “ON”, [Time Adjustment] will be displayed. Press the Menu/Select key and modify the time. [System Settings] → [Network Settings] → [Detail Settings] → [TimeAdjustmentSet]

B. Daylight Saving

Functions	• To set whether to set the daylight saving time. • To set the time difference in setting the daylight saving time.
Use	• To set the daylight saving time.
Setting/ Procedure	<DST Setting> • The default setting is OFF. ON “OFF” <Saving Time> • When setting to ON, set the time difference to move up. “060 Minute(S)” (001 to 150)

C. LCD Brightness

Functions	• To adjust LCD Brightness of the control panel.
Use	
Setting/ Procedure	• The default setting is 0. “0” (-3 to +3)

D. Management List

(1) Job Settings List

Functions	• To output the value set by the setting menu.
Use	
Setting/ Procedure	1. Select [System Settings] → [System Settings] → [Management List] → [Job Settings List]. 2. Select 1-Sided Print or 2-Sided Print and press the Menu/Select key to produce an output of the list.

(2) Counter List

- This function is not available if user authentication or account track is not to be implemented.

Functions	• To print the user counter and account track counter.
Use	• To output and check the user counter and account track counter.
Setting/ Procedure	*1.* Select [System Settings] → [System Settings] → [Management List] → [Counter List]. *2.* Select 1-Sided Print or 2-Sided Print and press the Menu/Select key to produce an output of the list.

E. System Auto Reset

Functions	• To set the period of time until system auto reset starts functioning.
Use	• To change the period of time until system auto reset starts functioning.
Setting/ Procedure	<SysAutoReset Set> • The default setting is ON. "ON" OFF <SysAutoReset Time> • The default setting is 1 Minute(s). "1 Minute(s)" (1 to 9)

13.8.2 Network Settings

A. TCP/IP

(1) TCP/IP Setting

Functions	• To set whether to enable or disable TCP/IP setting.
Use	
Setting/ Procedure	• The default setting is ON. "ON" OFF **NOTE** **• When the setting is changed, turn off the power switch and turn it on again more than 10 seconds after.**

(2) IP Setting

Functions	• To set whether to enter the IP address directly or to obtain it automatically.
Use	• To change the method for setting the IP address.
Setting/ Procedure	• The default setting is Auto Setting. Manual Input "Auto Setting" • When it is set to [Auto Setting], select the method to obtain it automatically. DHCP Setting : ON OFF BOOTP Setting : ON OFF ARP/PING Setting : ON OFF AUTO IP Setting : ON OFF **NOTE** • **[ARP/PING Setting] and [Auto IP Setting] cannot be set to "OFF" simultaneously.** • **They will all be set to "ON" when [Manual Input] is changed to [Auto Setting].** • When it is set to [Manual Input], set the IP address, subnet mask and default gate way.

(3) IPv6

Functions	• To set whether to use IPv6 in IP network communication. • To set whether to use the IPv6 address automatic acquisition setting. • To set IPv6 addresses.
Use	• To use IPv6 in IP network communication.
Setting/ Procedure	<IPv6 Setting> • The default setting is ON. "ON" OFF <Auto IPv6 Setting> • The default setting is ON. "ON" OFF **NOTE** • **When the setting is changed, turn off the power switch and turn it on again more than 10 seconds after.** <IPv6 address> • When [Auto IPv6 Setting] is set to OFF, make the settings of global address and gateway address. *1.* Select [Global Address] or [Gateway Address]. *2.* Enter the address using ▲ and ▼ keys. *3.* To change the prefix length of global address, select [Prefix Length] and specify the number of bits within the range of 1 to 128. **NOTE** • **[LinkLocal Address] key appears, but its settings are not allowed to be changed.**

(4) DNS Server

Functions	• To set whether or not to enable the auto obtaining of the DNS server address. • To set the priority/secondary DNS server.
Use	• To enter priority/secondary DNS server.
Setting/ Procedure	<Server Auto Obtain> • The default setting is ON. "ON" OFF **NOTE** • **"ON" cannot be set when [IP Setting] is set to "Auto Setting."** <Priority/SecondaryDNS server> • Select the corresponding key, and input the server address by IPv4 or the IPv6 format.

(5) IP Filtering

Functions	• To set the IP filter (Permit). • To set the IP filter (Deny).
Use	• To set whether to allow only IP addresses that are within a specified range. • When [ON] is set, select one from Set 1 to Set 5 and specify the range of IP addresses to be allowed.
Setting/ Procedure	<IP Filter (Permit)> *1.* Select ON or "OFF". *2.* When [ON] is set, select one from Permit Set 1 to Permit Set 5 and specify the range of IP addresses to be allowed using ▲ and ▼ keys. *3.* Press the Menu/Select key. <IP Filter (Deny)> *1.* Select ON or "OFF". *2.* When [ON] is set, select one from Deny Set 1 to Deny Set 5 and enter the range of IP addresses to be denied using ▲ and ▼ keys. *3.* Press the Menu/Select key.

(6) IPsec

<IPsec Setting>

Functions	• To set whether to use IPsec protocol for IP network communication.
Use	• When IPsec protocol is used to perform encrypted communication.
Setting/ Procedure	• The default setting is OFF. ON "OFF"

<IKE Setting>

Functions Use	• To make the settings that relate to IKE (Internet Key Exchange) protocol which is used for IPsec communication. • Settings can be made independently for four different sets (Group 1 to 4).
Setting/ Procedure	<Group> • Among four groups (Group 1 to 4), select a group where settings are made. <Encryption Algorithm> • Set a encryption algorithm used for IPsec communication. • The default setting is OFF. DES_CBC 3DES_CBC “OFF” <Auth. Algorithm> • Set an authentication algorithm used for IPsec communication. • The default setting is MD5. “MD5” SHA-1 <Key Validity Period> • Set a key validity period. • The default setting is 028800 sec. 028800 sec (000080 to 604800) <Diffie-Hellman> • Set Diffie-Hellman group. • The default setting is Group 2. Group 1 “Group 2”

<SA Setting>

Functions Use	• To make the settings that relate to IPsec SA (Security Association) which is used for IPsec communication. • Settings can be made independently for eight different sets (Group 1 to 8).
Setting/ Procedure	<Group Set Number> • Among Group 1 to 8, select a group where settings are made. • Select the key of the Group, make the following settings. (If the combination of each selection is not allowed among different settings, the key operation of the corresponding option is locked.) <Security Protocol> • Set a security protocol. • The default setting is OFF. AH ESP ESP_AH "OFF" <ESP Encryption> • Set an encryption algorithm used for ESP protocol. • The default setting is DES_CBC. "DES_CBC" 3DES_CBC AES_CBC AES_CTR NULL <ESP Auth> • Set authentication algorithm used for ESP protocol. • The default setting is OFF. MD5 SHA-1 "OFF" <AH Auth. Algorithm> • Set authentication algorithm used for AH protocol. • The default setting is MD5. "MD5" SHA-1 <Time after Setup> • Set the period of time starting from when SA connection is established and ending when the SA connection is cut. • The default setting is 003600 sec. 000120 to 604800 sec

<Peer>

Functions	• To register destinations used for IPsec communication. • Settings can be made independently for different ten sets (Group 1 to 10).
Use	
Setting/ Procedure	<Peer> • Among Group 1 to 10, select a group where settings are made. • Select the key of the Group, make the following setting. <Encapsulation Mode> • Set a encapsulation mode used for IPsec. • The default setting is OFF. Tunnel Mode Transport Mode "OFF" <PFS Setting> • When the transport mode is selected, set whether to use Perfect forward secrecy. • The default setting is OFF. ON "OFF" <Peer Address> • When the encapsulation mode is set, specify the IP address of destinations. • Enter the IP address with IPv4 or IPv6 format. <Pre-Shared Key> • When the encapsulation mode is set, specify a Pre-shared key (Key data). • Enter the Pre-shared key.

(7) RAW Port Number

Functions	• To set the RAW port number.
Use	• To set the RAW port number for the printer. • Several data can be accepted at the same time by selecting several ports.
Setting/ Procedure	*1.* Select the necessary port number. *2.* When using the selected port, enter the RAW port number using ▲ and ▼ keys. *3.* Press the Menu/Select key.

(8) Host Name

Functions	• To set the DNS host name.
Use	• To enter the DNS host name.
Setting/ Procedure	• Enter the DNS host name using ▲ and ▼ keys, and press the Menu/Select key.

(9) DNS Domain

Functions	• To set whether or not to enable the auto obtaining for the DNS domain name. • To set the DNS default domain name. • To set the DNS search domain name.
Use	• To enter the DNS default domain name. • To enter the DNS search domain name.
Setting/ Procedure	<NameAutoRetrieval> • The default setting is ON. "ON" OFF **NOTE** • **"ON" cannot be set when [IP Setting] is set to "Auto Input."** <Domain Name> *1.* Select [DefaultDomainName] or [SearchDomainName 1 to 3]. *2.* Enter the domain name using ▲ and ▼ keys and press the Menu/Select key.

(10) Dynamic DNS Setting

Functions	• To set whether or not to enable the dynamic DNS setting.
Use	• To set the dynamic DNS.
Setting/ Procedure	• The default setting is OFF. ON "OFF"

B. NetWare

(1) IPX

Functions	• To enable or disable the NetWare (IPX) setting. • To set the ethernet frame type.
Use	• To use NetWare (IPX) setting. • To specify the frame type for transmission.
Setting/ Procedure	<IPX Setting> • The default setting is ON. "ON" OFF <EthernetFrameType> • The default setting is Auto Detect. "Auto Detect" 802.2 802.3 Ethernet II 802.2SNAP **NOTE** • **When the setting is changed, turn off the power switch and turn it on again more than 10 seconds after.**

(2) NetWare Print

NOTE

- **When the setting is changed, turn off the power switch and turn it on again more than 10 seconds after.**

Functions	• To set whether to use the NetWare print mode. • To set the NetWare print mode. • To display NetWare status.
Use	• To change the NetWare print mode. • To check NetWare status.
Setting/ Procedure	• The default setting is OFF. Pserver Nprinter/Rprinter "OFF"

<Pserver: Print Server Name/Print Server PW>

Functions	• To set the print server name and print server password.
Use	• To enter the print server name or the print server password.
Setting/ Procedure	*1.* Select [Print Server Name] or [Print Server PW]. *2.* Enter the print server name or the print server password (up to 63 characters) using ▲ and ▼ keys, and press the Menu/Select key.

<Pserver: Polling Interval>

Functions	• To set the polling interval.
Use	• To set the interval to search the print queue.
Setting/ Procedure	• Enter the polling interval between 1 and 65535 using ▲ and ▼ keys.

<Pserver: Bindery/NDS Set>

Functions	• To set whether to enable or disable the bindery setting when using NetWare4.x model and after.
Use	• To enable the bindery service.
Setting/ Procedure	• The default setting is NDS. "NDS" NDS/Bindery

<Pserver: File Server Name>

Functions	• To set the file server name.
Use	• To set the full server name for the print server to logon.
Setting/ Procedure	• Enter the File server name (up to 47 characters) using ▲ and ▼ keys, and press the Menu/Select key.

<Pserver: NDS Context Name>

Functions	• To set the NDS context name (context name to register NDS print server).
Use	• To set the NDS context name.
Setting/ Procedure	• Enter the NDS context name (up to 191 characters) using ▲ and ▼ keys, and press the Menu/Select key.

<Pserver: NDS Tree Name>

Functions	• To set the NDS tree name (name to login).
Use	• To set the NDS tree name.
Setting/ Procedure	• Enter the NDS tree name (up to 63 characters) using ▲ and ▼ keys, and press the Menu/Select key.

<Nprinter/Rprinter: Print Server Name>

Functions	• To set the print server name.
Use	• To set the print server name.
Setting/ Procedure	• Enter the printer name (up to 63 characters) using ▲ and ▼ keys, and press the Menu/Select key.

<Nprinter/Rprinter: Auto Setting>

Functions	• To set whether to use the printer number automatic acquisition setting.
Use	• To use when automatic setting the printer number.
Setting/ Procedure	• The default setting is ON. "ON" OFF

<Nprinter/Rprinter: Printer Number>

Functions	• To set the printer number.
Use	• To set the printer number.
Setting/ Procedure	• Enter the number between 0 and 254 using ▲ and ▼ keys.

(3) User Auth. Set NDS

Functions	• To set whether or not to use the user authentication setting.
Use	• To conduct user authentication in netware environment.
Setting/ Procedure	• The default setting is ON. "ON" OFF

C. HTTP Server

(1) HTTP Server Setting

Functions	• To set whether or not to use the http server setting.
Use	
Setting/ Procedure	• The default setting is ON. "ON" OFF

(2) PSWC Setting

Functions	• To set whether to use the PageScope Web Connection.
Use	
Setting/ Procedure	• The default setting is ON. "ON" OFF

(3) IPP Setting

Functions	• To set whether to enable or disable IPP (Internet Printing Protocol) setting.
Use	
Setting/ Procedure	• The default setting is ON. "ON" OFF

(4) IPP Auth. Setting

<Auth. Method>

Functions	• To set the authentication method for IPP authentication.
Use	• To change the authentication method when conducting IPP authentication.
Setting/ Procedure	• The default setting is req-user-name. "req-user-name" basic digest OFF

<User Name>

Functions	• To set the User name for IPP authentication.
Use	
Setting/ Procedure	• Enter the user name using ▲ and ▼ keys, and press the Menu/Select key.

<Password>

Functions	• To set the password for IPP authentication.
Use	
Setting/ Procedure	• Enter the password using ▲ and ▼ keys, and press the Menu/Select key.

<realm>

Functions	• To set the realm for identifying the authentication setting for IPP authentication.
Use	
Setting/ Procedure	• Enter the realm using ▲ and ▼ keys, and press the Menu/Select key.

(5) Accept IPP jobs

Functions	• To set whether to allow or restrict the IPP job.
Use	
Setting/ Procedure	• The default setting is ON. "ON" OFF

(6) Support Info.

Functions	• To set the operation support information.
Use	• For the response setting to see if IPP transmission supports each function.
Setting/ Procedure	• Set "ON" or OFF for each item.

(7) Printer Info.

Functions	• To set the printer information.
Use	• To set the printer information.
Setting/ Procedure	• Enter the printer name, printer location, and printer information using ▲ and ▼ keys.

D. SMB

(1) Print Setting

Functions	• To set whether to use SMB port or not in printer mode.
Use	
Setting/ Procedure	• The default setting is ON. "ON" OFF

<NetBIOS Name>

Functions	• To set NetBIOS name.
Use	• To set NetBIOS name.
Setting/ Procedure	• Enter the NetBIOS name (up to 15 characters) using ▲ and ▼ keys, and press the Menu/Select key.

<Print Service Name>

Functions	• To set the print service name.
Use	• To set the print service name.
Setting/ Procedure	• Enter the print service name (up to 13 characters) using ▲ and ▼ keys, and press the Menu/Select key.

<Workgroup>

Functions	• To set the workgroup.
Use	• To set the workgroup.
Setting/ Procedure	• Enter the workgroup (up to 15 characters) using ▲ and ▼ keys, and press the Menu/Select key.

(2) WINS

<WINS Setting>

Functions	• To set whether or not to enable the WINS setting.
Use	• To use the WINS (Windows Internet Name Service) setting is necessary. • By using the WINS, the traffic by broadcast can be reduced, and the communication becomes available with the network where broadcast does not reach.
Setting/ Procedure	• The default setting is ON. "ON" OFF

<Auto Retrieval Set>

Functions	• To set whether or not to enable the auto obtaining of the WINS server address.
Use	• To acquire the WINS server address automatically. • To obtain the WINS server address from DHCP server. If there are more than on address settings, up to two can be acquired.
Setting/ Procedure	• The default setting is ON. "ON" OFF

<WINS Server Add 1, 2>

Functions	• To set the WINS server address.
Use	• To use when manually entering the WINS server address. • The primary address and the secondary address can be set. (The primary address has the priority during operation.)
Setting/ Procedure	*1.* Select [WINS Server Add1] or [WINS Server Add2]. *2.* Enter the WINS server address.

<Node Type Setting>

Functions	• To set a node type.
Use	• To change the current node type.
Setting/ Procedure	• The default setting is H Node. B Node P Node M Node "H Node"

(3) Direct Hosting

Functions	• To set whether or not to enable the direct hosting setting.
Use	• To use the direct hosting setting is necessary.
Setting/ Procedure	• The default setting is ON. "ON" OFF

E. Web Service

(1) Web Service Setting

<Friendly Name>

Functions	• To define a friendly name that is used when printing a job with Web Service function.
Use	
Setting/ Procedure	*1.* Select [Friendly Name]. *2.* Enter the friendly name (up to 62 characters) using ▲ and ▼ keys, and press the Menu/Select key.

<SSL Setting>

- It will be displayed when certificate is issued from PageScope Web Connection.

Functions Use	• To set whether to use SSL when using Web Service function.
Setting/ Procedure	• The default setting is OFF. ON "OFF"

(2) Printer Settings

<Printer Function>

Functions Use	• To set whether to use this printer as a WS printer.
Setting/ Procedure	• The default setting is OFF. ON "OFF"

<Printer Name>

Functions Use	• To set the WS printer name.
Setting/ Procedure	• Enter the friendly name (up to 63 characters) using ▲ and ▼ keys, and press the Menu/Select key. **NOTE** • **When the setting is changed, turn off the power switch and turn it on again more than 10 seconds after.**

<Printer Location>

Functions Use	• To set the WS printer location.
Setting/ Procedure	• Enter the friendly name (up to 63 characters) using ▲ and ▼ keys, and press the Menu/Select key. **NOTE** • **When the setting is changed, turn off the power switch and turn it on again more than 10 seconds after.**

<Printer Info.>

Functions Use	• To set the WS printer information.
Setting/ Procedure	• Enter the friendly name (up to 63 characters) using ▲ and ▼ keys, and press the Menu/Select key. **NOTE** • **When the setting is changed, turn off the power switch and turn it on again more than 10 seconds after.**

F. SNMP

(1) SNMP Setting

Functions	• To set whether to use SNMP (Simple Network Management Protocol) or not. • To set the SNMP version to be used.
Use	• Not to use SNMP. • To readout management information base and to enter community name for writing.
Setting/ Procedure	• The default setting is ON. "ON" OFF • To individually set whether or not to use SNMP v1/v2c (IP), SNMP v3 (IP), and SNMP v1 (IPX). • The default setting is ON. "ON" OFF

(2) UDP Port Number

Functions	• To set the UDP standby port number which is used for SNMP (IP).
Use	
Setting/ Procedure	• Enter the port number between 1 and 65535 using ▲ and ▼ keys.

(3) SNMP v1/v2c Setting

Functions	• To conduct setting when using SNMP v1/v2c.
Use	• To use when changing write setting. • To use when entering the community name for reading the Management Information Base (MIB) and writing to it.
Setting/ Procedure	<Read Community> • Enter a Read community name. <Write Setting> • The default setting is ON. "ON" OFF **NOTE** • **[ON] cannot be selected when the following setting is set to "ON." [Admin. Settings] → [Security Settings] → [EnhancedSecurity]** <Write Community> • Enter a Write community name.

(4) SNMP v3 Settings

<Context Name>

Functions	• Set the context name which is used for SNMP v3.
Use	
Setting/ Procedure	• Enter the context name (up to 64 characters) using ▲ and ▼ keys, and press the Menu/Select key.

<Discovery User>

Functions Use	• To set whether or not to enable the discovery authority user which is used for SNMP v3.
Setting/ Procedure	• The default setting is ON. "ON" OFF

<Discovery User Name>

Functions Use	• To set the name of the discovery authority Users which is used for SNMP v3.
Setting/ Procedure	• Enter the discovery user name (up to 32 characters) using ▲ and ▼ keys, and press the Menu/Select key. **NOTE** • **The user name same with the read user name or the write user name cannot be set.**

<Read User Settings: Read User Name>

Functions Use	• To set the read-only user name used for SNMP v3.
Setting/ Procedure	• Enter the read user name (up to 32 characters) using ▲ and ▼ keys, and press the Menu/Select key. **NOTE** • **The user Name same with the discovery user name cannot be used.**

<Read User Settings: Security Level>

Functions	• To set the security level of the read-only user used for SNMP v3.
Use	• To use when changing the security level of the read-only user. OFF : No authentication will be conducted when the read-only user accesses. Auth-password : Conducts authentication only for the authentication password when the read-only user accesses. Auth/Priv-password : Conducts authentication by authentication password and privacy password when read-only User accesses.
Setting/ Procedure	• The default setting is Auth/Priv-password. OFF Auth-password "Auth/Priv-password"

<Read User Settings: Password>

Functions Use	• To set the Authentication password for the read-only User which is used for SNMP v3.
Setting/ Procedure	*1.* Select a type of password. *2.* Enter the password (up to 32 characters) using ▲ and ▼ keys, and press the Menu/Select key.

<Write User Settings: Write User Name>

Functions Use	• To set the name of the reading/writing authority user which is used for SNMP v3.
Setting/ Procedure	• Enter the write user name (up to 32 characters) using ▲ and ▼ keys, and press the Menu/Select key. **NOTE** • **The user name same with the discovery use name cannot be used.**

<Write User Settings: Security Level>

Functions	• To set the security level for the reading/writing authority user which is used for SNMP v3.
Use	• To use for changing the security level of the reading/writing authority user. OFF : Authentication will not be conducted when reading/writing authority user accesses. Auth-password : Conducts authentication only with authentication password when reading/writing authority user accesses. Auth/Priv-password : Conducts authentication by authentication password and privacy password when reading/writing authority user accesses.
Setting/ Procedure	• The default setting is Auth/Priv-password. OFF Auth-password "Auth/Priv-password" **NOTE** • **[OFF] cannot be selected when the following setting is set to "ON." [Admin. Settings] → [Security Setting] → [EnhancedSecurity]**

<Write User Settings: Password>

Functions Use	• To set the Authentication password for the write-only User which is used for SNMP v3.
Setting/ Procedure	*1.* Select a type of password. *2.* Enter the password (up to 32 characters) using ▲ and ▼ keys, and press the Menu/Select key.

<Encrypt Algorithm>

Functions Use	• To set the Encrypt Algorithm to be used for SNMP v3.
Setting/ Procedure	• The default setting is DES. "DES" AES_128

<Auth. Method>

Functions Use	• To set the Auth. Method to be used for SNMP v3.
Setting/ Procedure	• The default setting is MD5. "MD5" SHA-1

(5) TRAP Settings

<TRAP Settings>

Functions Use	• To select whether to allow or restrict TRAP Settings of SNMP.
Setting/ Procedure	• The default setting is Allow. "Allow" Restrict

<TRAP when Auth. Fails>

Functions Use	• To select whether or not to use TRAP when Auth. Fails.
Setting/ Procedure	• The default setting is OFF. ON "OFF"

G. AppleTalk

NOTE

- **When Network speed setting is changed, turn off the power switch and turn it on again more than 10 seconds after.**

(1) AppleTalk Setting

Functions	• To set whether to enable or disable the AppleTalk setting.
Use	• To use AppleTalk setting.
Setting/ Procedure	• The default setting is OFF. ON "OFF"

(2) Printer Name

Functions	• To set the printer name displayed on the AppleTalk network.
Use	• To set the printer name displayed on the AppleTalk network.
Setting/ Procedure	• Enter the printer name (up to 31 characters) using ▲ and ▼ keys, and press the Menu/Select key.

(3) Zone Name

Functions	• To set the zone name connected with AppleTalk network.
Use	• To set the zone name connected with AppleTalk network.
Setting/ Procedure	• Enter the zone name (up to 31 characters) using ▲ and ▼ keys, and press the Menu/Select key.

H. Bonjour

(1) Bonjour Setting

Functions	• To set whether or not to use the Bonjour setting.
Use	• To use when operating under the Bonjour service environment.
Setting/ Procedure	• The default setting is ON. "ON" OFF

(2) Bonjour Name

Functions	• To set the bonjour name.
Use	• To set the name for identifying over the bonjour network.
Setting/ Procedure	• Enter the Bonjour name (up to 64 characters) using ▲ and ▼ keys, and press the Menu/Select key.

I. TCP Socket

(1) TCP Socket

Functions	• To set whether or not to set the TCP socket. • To set the port number for TCP socket transmission.
Use	• To use when using the application, etc. for TCP socket transmission. • To be used when entering the port number used for TCP socket transmission.
Setting/ Procedure	<Port Setting> • The default setting is ON. "ON" OFF <SSL/TLS Setting> • It will be displayed when certificate is issued from PageScope Web Connection. • The default setting is ON. "ON" OFF <Port Number Setting> • Enter the port number between 1 and 65535 using ▲ and ▼ keys. **NOTE** • **When Network speed setting is changed, turn off the power switch and turn it on again more than 10 seconds after.**

(2) TCP Socket ASCII

Functions	• To set whether or not to set the TCP socket for ASCII mode. • To set the port number which is used for TCP socket transmission by ASCII mode.
Use	• To use when using the application, etc. for TCP socket transmission by ASCII mode. • To use when entering the port number for TCP socket transmission by ASCII mode.
Setting/ Procedure	<Port Setting> • The default setting is ON. "ON" OFF <Port Number> • Enter the port number between 1 and 65535 using ▲ and ▼ keys. **NOTE** • **When Network speed setting is changed, turn off the power switch and turn it on again more than 10 seconds after.**

J. Detail Settings

(1) Network Speed

Functions	• To set the network speed.
Use	• To set the specific network speed.
Setting/ Procedure	• The default setting is Auto Setting. "Auto Setting" 10Mbps HalfDuplex 10Mbps FullDuplex 100MbpsHalfDuplex 100MbpsFullDuplex 1000MbpFullDuplex **NOTE** • **When Network speed setting is changed, turn off the power switch and turn it on again more than 10 seconds after.**

(2) Time Adjustment Setting

<NTP Setting>

Functions	• To set whether to enable or disable the NTP setting.
Use	• To synchronize the time between the server and the client.
Setting/ Procedure	• The default setting is OFF. ON "OFF"

<NTP Server Address>

Functions	• To set the NTP server address.
Use	• To enter the NTP server address.
Setting/ Procedure	<Input Host Name> • Enter the host name. <Address Input> • Select [Enter IPv4Address] or [Enter IPv6Address] and enter a host address.

<Port Number>

Functions	• To set the NTP server address.
Use	• To enter the NTP server address.
Setting/ Procedure	• Enter the port number between 1 and 65535 using ▲ and ▼ keys.

(3) When Invalid Cert.

Functions	• To set how to process the job when SSL certificate becomes invalid.
Use	
Setting/ Procedure	• The default setting is Continue. Delete the Job "Continue"

(4) PING Confirmation

Functions	• To set the TCP/IP network diagnosis by PING.
Use	• To check the condition of TCP/IP network.
Setting/ Procedure	<Input Host Name> • Enter a host name. <Address Input> • Select [Enter IPv4Address] or [Enter IPv6Address] and enter a host address. <Check Connection> • Select [Check Connection] key and press the Menu/Select key to check the connection.

13.8.3 Printer Settings

A. USB Timeout

Functions	• To set a period of time that elapses before input and output timeouts of communication are activated.
Use	• To set a period of time that elapses before input and output timeouts of communication are activated.
Setting/ Procedure	• The default setting is 0060 sec for input and output timeouts. "0060 sec" (0010 to 1000 sec)

B. Network Timeout

Functions	• To set a period of time that elapses before input and output timeouts of communication are activated.
Use	• To set a longer time period when timeout happens under some network statuses.
Setting/ Procedure	• The default setting is 0060 sec for input and output timeouts. "0060 sec" (0010 to 1000 sec)

C. Print XPS Errors

Functions	• To set whether to print error information when an error occurs while printing a XPS file.
Use	
Setting/ Procedure	• The default setting is ON. "ON" OFF

13.8.4 System Connection

A. OpenAPI Settings

(1) Access Setting

Functions	• To allow or restrict the access from other systems with OpenAPI when using Page Scope Data Administrator.
Use	• To restrict access from other systems with OpenAPI.
Setting/ Procedure	• The default setting is Allow. "Allow" Restrict

(2) Enable SSL

- It will be displayed when certificate is issued from PageScope Web Connection.

Functions	• To set whether to encrypt access from other systems by SSL when using Page Scope Data Administrator.
Use	• To encrypt access by SSL from other systems using OpenAPI.
Setting/ Procedure	• The default setting is OFF. ON “OFF”

(3) Authentication

Functions	• To set whether to authenticate access of other systems which uses OpenAPI when using PageScope Data Administrator.
Use	• To set authentication of the access from other systems using OpenAPI.
Setting/ Procedure	• The default setting is OFF. ON “OFF” • When setting to [ON], enter the auth. login name and the auth. password to be set.

(4) Port Number Setting

Functions	• To set the access port for other systems with OpenAPI when using PageScope Data Administrator.
Use	• To change the access port number for other systems with OpenAPI.
Setting/ Procedure	*1.* Select Port Number or Port Number (SSL), and press the Menu/Select key. *2.* Enter the port number between 1 and 65535 using ▲ and ▼ keys.

B. Call Remote Center

- It will be displayed when the setup at the CS Remote Care center is complete.

Functions Use	• To call the CS Remote Care center from the administrator, when the CS Remote Care setup is complete.
Setting/ Procedure	For details, see “CS Remote Care.” See P.274

13.9 Admin. Settings

13.9.1 Security Settings

A. Admin. Password

Functions	• To set/change the administrator password.
Use	• To change the administrator password.
Setting/ Procedure	• Enter the administrator password on the on-screen keyboard. Current Password : Enter the current administrator password New Password : Enter the new administrator password to be used RetypeNewPassword : Retype the new administrator password **NOTE** • **When [Admin. Settings] → [Security Settings] → [Security Details] leads to [Password Rules] being ON, the password with the same letters, the password which is same as the previous one and the password of less than eight digits cannot be changed.**

B. Admin. Sec. Levels

Functions	• To set the level for admin. settings item open to the user.
Use	• To make part of the admin. settings items open to the user.
Setting/ Procedure	• The default setting is OFF. ON Minimum "OFF"

C. Security Details

(1) Password Rules

Functions	• To set whether to apply the password rules.
Use	• To apply the password rule to enhance security. • Passwords to be covered: CE (service) password, administrator password, user box password, user password, account track password, passwords for confidential documents. • Details of the password rules: Password except user password, user box password shall be 8 digits of one-bite alphanumeric characters. (Case-sensitive) User password shall be 8 digits of one-bite alphanumeric characters. (Case-sensitive) User box password shall be 8 digits of one-bite alphanumeric characters. Password with only the same letter is prohibited. Password same with the one prior to change is prohibited. When the password rule is set to [ON], the password cannot be changed or registered unless it follows the above conditions.
Setting/ Procedure	• The default setting is OFF. ON "OFF" **NOTE** • **[OFF] cannot be selected when the following setting is set to "ON."** **[Admin. Settings] → [Security Settings] → [EnhancesSecurity]** • **[ON] cannot be selected when the following setting is set to "OFF."** **[Service Mode] → [Enhanced Security] → [CE Authentication]** **[CE Authentication] of jig software will not be displayed and cannot be set to "OFF" when [Password Rules] is set to "ON."**

(2) Prohibited Functions

<table>
<tr><td>Functions</td><td>• To set the function for prohibiting authentication operation in order to prevent the unauthorized access.</td></tr>
<tr><td>Use</td><td>• To use when setting the system to prohibit authentication failure when conducting authentication by password, etc.
• Authentications which are subjected to this function: CE authentication, administrator authentication, user+ accounts authentication, SNMP authentication, secure print authentication, user box authentication.

Mode 1 : When failed to authenticate, authentication operation (entering the password) will be prohibited for a certain period of time.
Mode 2 : When failed to authenticate, authentication operation (entering the password) will be prohibited for a certain period of time.
The number of times failure occurred will be counted, and when the number reaches to the specified time, authentication will be prohibited and the access will be locked.
When the access is locked, select [Release] on the main body, or turn power switch OFF/ON to cancel it.
For CE authentication and administrator authentication, only turning power switch OFF/ON will cancel it.
When the machine goes into an access lock condition, release the lock in the following procedure.

<table>
<tr><td>user+ account
SNMP
secure print
user box</td><td>• Select keys in the following order. [Admin. Settings] → [Security Settings] → [Security Details] → [ProhibitFunctions].
Then select [Release] and press the Menu/Select key.</td></tr>
<tr><td rowspan="2">Administrator authentication</td><td>• After the power switch is turned OFF and ON, the access lock is released automatically after the lapse of a predetermined period of time.</td></tr>
<tr><td>• [Service Mode] → [Security Settings] → [Admin.AuthLockREL]</td></tr>
<tr><td>CE authentication</td><td>• Turn power ON with the Menu/Select key held down; then, on the Trouble Reset screen, press ▲ → ▶ → ▼ → ◀ → ▼ → ▶ → ▲. This starts the access lock release timer (set by the Release Time function).The access lock state is thereafter released when the period of time set in this function elapses.

NOTE
• If the access lock state is released through the above procedure, do not turn power OFF until the time elapses as set through [Service Mode] → [Security Settings] → [Release Time]. If the power is turned OFF before the timer set for release time expires, the lock release operation becomes invalid.</td></tr>
</table>
</td></tr>
</table>

Setting/ Procedure	• The default setting is Mode 1. "Mode 1" Mode 2 **NOTE** • **[Mode 1] cannot be selected when the following setting is set to "ON."** **[Admin. Settings] → [Security Settings] → [EnhancedSecurity]** • **Only the number of times for trials up to the access lock can be changed.** • When [Mode 2] is selected, set the number of times where checks are made before access is locked. • Select [Release Time] and set a period of time that elapses before access lock is released.

(3) Security Print Access

Functions	• To display the status of the authentication system on the control panel for the confidential document access.
Use	• It cannot be changed at the operator's option since it will automatically be set according to the [ProhibitFunctions] setting. • It will be set to [Mode 1] when [ProhibitFunctions] is set to [Mode 1]. It will be set to [Mode 2] when [ProhibitFunctions] is set to [Mode 2]. Mode 1 : This mode is for authentication by confidential document ID and password. It displays the list of the corresponding confidential document to print them. Mode 2 : This mode is for authentication by confidential document ID. It displays the list of the corresponding confidential document, and print them with authentication by password. **NOTE** • **[Mode 1] cannot be selected when the following setting is set to "ON."** **[Admin. Settings] → [Security Settings] → [EnhancedSecurity]**
Setting/ Procedure	• The default setting is Mode 1. "Mode 1" Mode 2

(4) Print Data Capture

Functions	• To set whether to allow or restrict capturing the print job data.
Use	• To be used when carrying out [Service Mode] → [System Settings] → [Data capture].
Setting/ Procedure	• The default setting is Allow. "Allow" Restrict **NOTE** • **[Allow] cannot be selected when the following setting is set to "ON."** **[Admin. Settings] → [Security Settings] → [EnhancedSecurity]**

(5) Delete Job History

Functions	• Clear the all job logs.
Use	
Setting/ Procedure	• Select [Start] on the confirmation screen and press the Menu/Select key.

(6) Audit Log

- It will be displayed when the following setting shows that switch No.42 is set to [01] at Hex assignment.
  [Service Mode] → [System Settings] → [SoftwareSWSettings]

Functions	• Selects whether to keep logs of operations and access made by users and service engineers. • To set whether to overwrite existing logs.
Use	• To ensure security, this settings is used to keep logs of operations and access including security settings changes, authentication, and job executions by users and service engineers. • Audit logs are saved in HDD and NVRAM.
Setting/ Procedure	<Audit Log Setting> • The default setting is OFF. ON "OFF" **NOTE** • **After selecting "ON", the power switch must be turned OFF and ON so that the new setting takes effect.** • **When ON is selected in [Admin. Settings] → [Security Settings] → [Enhanced-Security], this setting is automatically set to "ON."** <OverwriteAuditLog> • Set whether to allow or restrict overwriting existing logs when saving audit logs. • The default setting is Restrict. Allow "Restrict" <Delete Audit Log> • To erase audit logs, Select [Erase Audit Log] → [Yes].

D. Enhanced Security

Use	• To set whether or not to enhance security.
Setting/ Procedure	• To use when enhancing the security function at user's option. • The following settings are necessary for setting the security enhancement "ON". Admin. Password : Change it with the one which meets password rules. HDD Lock Password or Encryption word : Set the HDD lock password or encryption word with 20 characters. (It can be set only when HDD is mounted. Encryption word can be set only when SC-503 is mounted.) SSL Certificate : Register self-certificate for SSL communication from the PSWC. CE (Service) Password : Change it with the one which meets password rules. CS Remote Care : Conduct RAM clear, and cancel the setting. Auth. Device Setting : Set to "Not Installed."
Use	• The default setting is OFF. ON "OFF"

NOTE

- **Setting the EnhancedSecurity "ON" will change the setting values for the following functions.**

Name of the function	Default setting	When EnhancedSecurity is ON
ProhibitFunctions	Mode 1	Mode 2 (Cannot be changed) set to three times *Can change times (from once to three times)
Password Rules	OFF	ON (Cannot be changed)
# of Auth Attempts	3	3
Release Time	5 min.	The lower limit of settable range is 5 minutes. (Cannot be set to less than 5 minutes)
PrintDataCapture	Allowed	Prohibited (Cannot be changed)
Overwrite HDDdata	OFF	Setting cannot be changed to OFF
SNMPv1/v2c Write Setting	ON	OFF
SNMPv3 Write User Security Level	Auth/Priv-password	Setting cannot be changed to OFF
TCP Socket (SSL)	ON	OFF
OpenAPI SSL Setting	OFF	ON
Audit Log	OFF	ON
Release Time (Service Mode)	5 min.	The lower limit of settable range is 5 minutes. (Cannot be set to less than 5 minutes)
Internet ISW (Service Mode)	Disabled	Disabled (Cannot be changed)

E. HDD Settings

- It will be displayed only when the optional hard disk (HD-508) is mounted.

(1) Format HDD

Functions	• To conduct logical formatting of HDD.
Use	• To initialize HDD. **NOTE** **• It is subject to logical formatting here, therefore if starting with physical formatting, follow as [Service Mode] → [Machine Status] → [HDD Format].**
Setting/ Procedure	*1.* Select [Format HDD] → [Start]. *2.* Press the Menu/Select key. *3.* Turn off the power switch and turn it on again more than 10 seconds after.

(2) Check HDD Capacity

Functions	• To display the used space capacity, total space capacity, and the remaining capacity of the hard disk.
Use	• To check the capacity and the status of use of the hard disk.

(3) Overwrite All Area

Functions	• To delete the whole data in the hard disk by overwriting. • To initialize the area of use for the user stored in NVRAM.
Use	• To use when disposing of the hard disk. • Select the overwriting method from Mode 1 through 8. Mode 1 : It overwrites 0x00 once. Mode 2 : Overwrites with random numbers → overwrites with random numbers → overwrites with 0x00 Mode 3 : Overwrites with 0x00 → overwrites with 0xff → overwrites with random numbers → verifies Mode 4 : Overwrites with random numbers → overwrites with 0x00 → overwrites with 0xff Mode 5 : Overwrites with 0x00 → overwrites with 0xff → overwrites with 0x00 → overwrites with 0xff Mode 6 : Overwrites with 0x00 → overwrites with 0xff → overwrites with 0x00 → overwrites with 0xff → overwrites with 0x00 → overwrites with 0xff → overwrites with random numbers Mode 7 : Overwrites with 0x00 → overwrites with 0xff → overwrites with 0x00 → overwrites with 0xff → overwrites with 0x00 → overwrites with 0xff → overwrites with 0xaa Mode 8 : Overwrites with 0x00 → overwrites with 0xff → overwrites with 0x00 → overwrites with 0xff → overwrites with 0x00 → overwrites with 0xff → overwrites with 0xaa → verifies
Setting/ Procedure	*1.* Select [OverwriteAllData] → [Mode X] → [Start]. *2.* Press the Menu/Select key. *3.* Turn off the power switch and turn it on again more than 10 seconds after.

(4) Overwrite HDD data

- When the image becomes unnecessary, temporary data overwrite function will write meaningless data over all area where images are stored, and destroy the image data itself.
  The structure of image data will be destroyed so that in case HDD is stolen, the remaining data included in the image data will not leak. Using the HDD lock password function or optional security kit (SC-503) along with this function will provide a high level of security which prevents images of great importance from leaking. It is recommended to use HDD lock password function or security kit (SC-503) along with this function for those who require high level of security.

Functions	• To set whether or not to use overwrite temporary data.
Use	• To use when making temporary data overwrite function valid. • All data are temporarily written into HDD or memory during PC print. When the operation is complete, perform overwriting to the area data were once written in HDD or memory in order to enhance security. • To change overwriting method to use temporary data overwrite function. Mode 1: To overwrite 0x00 one time. Mode 2: Overwrite 0x00 → overwrite 0xff → overwrite 0x61 →validation
Setting/ Procedure	• The default setting is OFF. Mode 1 Mode 2 “OFF” **NOTE** • **[OFF] cannot be selected when the following setting is set to “ON.” [Admin. Settings] → [Security Settings] → [EnhancedSecurity]**

(5) Overwrite Priority

Functions	• To set overwriting method to use temporary data overwrite function.
Use	• “Encryption Priority/Overwrite Priority” can be selected when the optional security kit SC-503 is mounted. Encryption Priority : When the encryption word is set, the security level of the data will be enhanced before writing to HDD. When erasing data, they will all be converted into encryption data before overwritten. Therefore, overwriting will be executed with the value besides the value specified by the selected mode. Overwrite Priority : Standard encryption method will be applied to data written to HDD even when the encryption word is set, so overwriting and erasing will be performed without fail using the specified value in the selected mode. It is used for performing the overwriting and erasing according to the HDD data erase standard. **NOTE** • **It is necessary to make HDD format when encryption priority/overwrite priority setting is changed.**
Setting/ Procedure	• The default setting is Encryption Priority. (Only when the optional security kit SC-503 is mounted.) “Encryption Priority” Overwrite Priority

(6) Register HDD Lock PW

Functions	• To set the lock password for the hard disk.
Use	• To enter, change or delete the lock password for the hard disk.
Setting/ Procedure	*1.* Enter the password (20 characters) using ▲ and ▼ keys and press the Menu/ Select key. **NOTE** **• Password using only a single letter is not acceptable.** **• Don't forget the password. When the password is forgotten, the replacement of hard disk is needed.** *2.* Re-enter the password to confirm. *3.* Turn OFF the power switch and turn it ON again more than 10 seconds after.

(7) HDD Encryption Set

• It can be set only when the optional security kit (SC-503) is mounted.

Functions	• To set encryption key necessary to mount the optional security kit SC-503.
Use	• To setup security kit SC-503. • To re-set encrypting word due to exchange of NVRAM board or etc. **NOTE** **• This setting is available only when the optional security kit SC-503 is mounted.** **• HDD formatting is required after this setting. Therefore it is necessary to retrieve certain data from HDD in advance.** **The following data will be lost after HDD formatting.** **① Authentication data : Authentication mode, user authentication setting, account track setting** **② Box setting data : Box and text in the box, setting information of each box** **③ Job history**
Setting/ Procedure	*1.* Select [HDD EncryptionSet]. *2.* Enter encryption key (20 characters) using ▲ and ▼ keys and press the Menu/ Select key. **NOTE** **• Double-byte and identical characters are not acceptable.** *3.* Turn off the power switch and turn it on again more than 10 seconds after. *4.* Open [Admin. Settings] and conduct HDD formatting according to the instruction appeared on the panel. *5.* Turn off the power switch and turn it on again more than 10 seconds after.

F. Driver Encryption

Functions Use	• To set whether to use the factory default encryption word or user-defined one as a common key that encrypts a password used for a print job. User-Defined : Sets an encryption word. Enter an encryption word of 20 letters. Factory Default : Uses the factory default encryption word (Undisclosed predefined encryption key). **NOTE** • **When selecting [User-Defined], set an encryption key being consisted of the same letters in the printer driver. If the encryption word set in the main body differs from the encryption key set in the printer driver, different encrypted passwords are created and printing cannot be made.** • **The use of OpenAPI allows an encryption key to be obtained from the main body.**
Setting/ Procedure	<Encryption Setting> • The default setting is Factory Default. "Factory Default" User-Defined <EncryptPassphrase> *1.* Select [EncryptPassphrase]. *2.* Enter the password (20 characters) using ▲ and ▼ keys and press the Menu/Select key. *3.* Re-enter the password to confirm.

13.9.2 User Box Settings

A. Delete User Box

Functions Use	• To delete the unnecessary box without data.
Setting/ Procedure	*1.* Select the box to be deleted. *2.* Select [Start] and press the Menu/Select key.

B. Delete Secure Print

Functions Use	• To delete the whole classified documents in the box.
Setting/ Procedure	• Select [Start] and press the Menu/Select key.

C. Delete Time

(1) Secure Print Box

Functions Use	• To set whether or not to delete the confidential documents in the box after a certain period of time. It also sets the period of time to store data.
Setting/ Procedure	• The default setting is 1 Day. Do not delete. 12 Hours "1 Day" 2 Days 3 Days 7 Days 30 Days

(2) Encrypted PDF Box

Functions Use	• Specifies whether to delete encrypted PDF data stored in the box after a lapse of a predetermined period of time. Sets the time period for which encrypted PDF data can be stored.
Setting/ Procedure	• The default setting is 1 Day. Do not delete. 12 Hours "1 Day" 2 Days 3 Days 7 Days 30 Days

(3) Touch & Print Box

Functions Use	• Specifies whether to delete touch & print data stored in the box after a lapse of a predetermined period of time. Sets the time period for which touch & print data can be stored
Setting/ Procedure	• The default setting is 1 Day. Do not delete. 12 Hours "1 Day" 2 Days 3 Days 7 Days 30 Days

D. Doc. Hold Setting

Functions Use	• Selects whether to store the document again in the box after it was retrieved from the box. • If the function is set to No, the document is automatically deleted after it was retrieved.
Setting/ Procedure	• The default setting is ON. "ON" OFF

13.9.3 Auth Device Setting

• It will be displayed only when the optional authentication device is mounted.

A. Card Auth. Settings

Functions Use	• To select, and make the operation setting for, the IC Card Type.
Setting/ Procedure	<IC Card Type> • The default setting is Type A. "Type A" FeliCa <Operating Setting> • The default setting is Card. "Card" Card + Password

B. Bio Auth. Settings

Functions Use	• To set the beep sound and make the operation setting for it.
Setting/ Procedure	<Beep Sound> • The default setting is ON. "ON" OFF <Operating Setting> • The default setting is 1-to-many Auth. "1-to-many Auth." 1-to-1 Auth.

C. Touch & Print

Functions Use	• Specifies whether to store jobs in the touch & print box when bio authentication is used.
Setting/ Procedure	<Touch&PrintUserBox> • The default setting is Yes. "Yes" No <Print> • The default setting is Print All Jobs. "Print All Jobs." Print Each Job.

13.9.4 Expert Adjustment

A. Printer Adjustment

(1) Leading Edge Adjust.

Functions	• To vary the print start position in the sub scan direction for each of different paper types in the manual bypass tray.
Use	• The PH unit has been replaced. • The paper type has been changed. • The printed image deviates in the sub scan direction. • A faint image occurs on the leading edge of the image. • Able to make an individual adjustment for each paper type of plain paper, thick 1, thick 2, thick 3, thick 4, transparency, and envelope.
Adjustment Specification	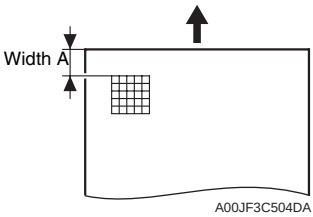 A00JF3C504DA Width A on the test pattern produced should fall within the following range. Specifications: 4.2 ± 0.5 mm Setting range: -3.0 mm to +3.0 mm (in 0.2 mm increments)
Adjustment Instructions	If width A is longer than the specifications, make the setting value smaller than the current one. If width A is shorter than the specifications, make the setting value greater than the current one.
Setting/ Procedure	*1.* Place A3 paper on the manual bypass tray. *2.* Call the Admin. Settings to the screen. *3.* Select [Expert Adjustment] → [PrinterAdjustment] → [Leading Edge Adjust.]. *4.* Select the [Plain paper]. *5.* Select [Print] and press the Menu/Select key to let the machine produce a test pattern. *6.* Check the dimension of width A on the test pattern. *7.* If width A falls outside the specified range, change the setting using ▲ and ▼ keys. *8.* Press the Menu/Select key to let the machine produce a test pattern. *9.* Check the dimension of width A on the test pattern. *10.*If width A is outside the specified range, change the setting again and make a check again. *11.*If width A falls within the specified range, press the Menu/Select key. *12.*Following the same procedure, adjust for thick 1 to 4, transparency, and envelope.

(2) Centering

Functions	• To vary the print start position in the main scan direction for each paper source.
Use	• The PH unit has been replaced. • A paper feed unit has been added. • The printed image deviates in the main scan direction.
Adjustment Specification	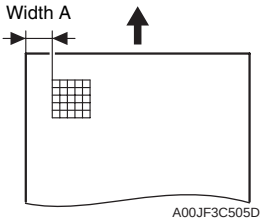 Width A on the test pattern produced should fall within the following range. Specifications: 3.0 ± 0.5 mm Setting range: -3.0 mm to +3.0 mm (in 0.2 mm increments)
Adjustment Instructions	If width A is longer than the specifications, make the setting value smaller than the current one. If width A is shorter than the specifications, make the setting value greater than the current one.
Setting/ Procedure	*1.* Call the Admin. Settings to the screen. *2.* Select [Expert Adjustment] → [PrinterAdjustment] → [Centering]. *3.* Select the paper source to be adjusted. *4.* Select [Print] and press the Menu/Select key to let the machine produce a test pattern. *5.* Check the dimension of width A on the test pattern. *6.* If width A falls outside the specified range, change the setting using ▲ and ▼ keys. *7.* Press the Menu/Select key to let the machine produce a test pattern. *8.* Check the dimension of width A on the test pattern. *9.* If width A is outside the specified range, change the setting again and make a check again. *10.*If width A falls within the specified range, press the Menu/Select key. *11.*Following the same procedure, adjust for all other paper sources. (Use A4 or 8 $^{1}/_{2}$ × 11 plain paper for the bypass.)

(3) Leading (Duplex)

Functions	• Makes an adjustment by changing the image write start position in the sub scan direction on the 2nd side of duplex printing for individual types of paper.
Use	• When the 2nd side image on paper fed from the tray is shifted in the sub scan direction. • Able to make an individual adjustment for each paper type of plain paper, thick 1, thick 2 and thick 3.
Adjustment Specification	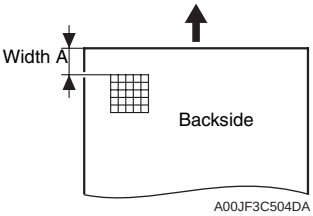 Width A on the test pattern produced should fall within the following range. Specifications: 4.2 ± 0.5 mm Setting range: -3.0 mm to +3.0 mm (in 0.2 mm increments)
Adjustment Instructions	If width A is longer than the specifications, make the setting value smaller than the current one. If width A is shorter than the specifications, make the setting value greater than the current one.
Setting/ Procedure	*1.* Call the Admin. Settings to the screen. *2.* Select [Expert Adjustment] → [PrinterAdjustment] → [Leading(Duplex)]. *3.* Select the [Plain paper]. *4.* Select [Print] and press the Menu/Select key to let the machine produce a test pattern. *5.* Check the dimension of width A on the test pattern. *6.* If width A falls outside the specified range, change the setting using ▲ and ▼ keys. *7.* Press the Menu/Select key to let the machine produce a test pattern. *8.* Check the dimension of width A on the test pattern. *9.* If width A is outside the specified range, change the setting again and make a check again. *10.*If width A falls within the specified range, press the Menu/Select key. *11.*Following the same procedure, adjust for thick 1 to 3.

(4) Centering (Duplex)

Functions	• To vary the print start position in the main scan direction for each paper source in the 2-sided mode.
Use	• To use when the optional automatic duplex unit AD-503 is set up. • The image on the backside of the 2-sided print deviates in the main scan direction.
Adjustment Specification	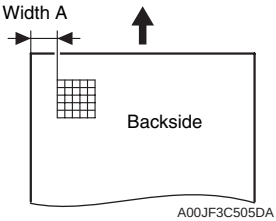 •Width A on the test pattern produced should fall within the following range. •For measurement, use the image produced on the backside of the test pattern. Specifications: 3.0 ± 0.5 mm Setting range: -3.0 mm to +3.0 mm (in 0.2 mm increments)
Adjustment Instructions	• If width A is longer than the specifications, make the setting value smaller than the current one. • If width A is shorter than the specifications, make the setting value greater than the current one.
Setting/ Procedure	*1.* Call the Admin. Settings to the screen. *2.* Select [Expert Adjustment] → [PrinterAdjustment] → [Centering(Duplex)]. *3.* Select the paper source to be adjusted. *4.* Select [Print] and press the Menu/Select key to let the machine produce a test pattern. *5.* Check the dimension of width A on the test pattern. *6.* If width A falls outside the specified range, change the setting using ▲ and ▼ keys. *7.* Press the Menu/Select key to let the machine produce a test pattern. *8.* Check the dimension of width A on the test pattern on the backside of the printed image. *9.* If width A is outside the specified range, change the setting again and make a check again. *10.*If width A falls within the specified range, press the Menu/Select key. *11.*Following the same procedure, adjust for all other paper sources. (Use A4 or 8 $^{1}/_{2}$ × 11 plain paper for the manual bypass tray.)

(5) Vertical Adjustment

Functions	• To synchronize the paper transport speed with the image writing speed.
Use	• The l adjustment becomes necessary. • The printed image distorts (stretched, shrunk). • When the printed image is stretched in the sub scan direction. • Able to make an individual adjustment for each paper type of plain paper, thick 1, thick 2, thick 3 and thick 4.
Adjustment Specification	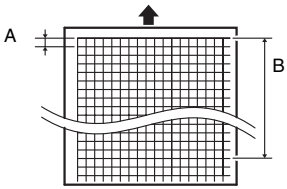 A00JF3C506DA Width A and width B on the test pattern produced should fall within the following ranges. Width A: equivalent to one grid Width B: equivalent to 48 grids Specifications A: 7.9 to 8.3 B: 389.1 to 392.1 Setting Range A, B: -7 to +7
Adjustment Instructions	If width A or B is longer than the specifications, make the setting value smaller than the current one. If width A or B is shorter than the specifications, make the setting value greater than the current one.
Adjustment Procedure	*1.* Load manual bypass tray with A3 or 11 × 17 plain paper. *2.* Call the Admin. Settings to the screen. *3.* Select these keys in this order: [Expert Adjustment] → [PrinterAdjustment] → [Vertical Adj.]. *4.* Select [Print] and press the Menu/Select key to let the machine produce a test pattern. *5.* Check width A (equivalent to one grid) and width B (equivalent to 48 grids) on the test pattern. *6.* If width of A or B falls outside the specified range, change the setting using ▲ and ▼ keys. *7.* Press the Menu/Select key to let the machine produce a test pattern again. *8.* Check width A and width B on the test pattern. *9.* If width A or B falls outside the specified range, change the setting value and make a check again. *10.*If width A or B falls within the specified range, press the Menu/Select key. *11.*Following the same procedure, adjust for [Thick 1 to 4].

(6) Erase Leading Edge

Functions	• To set the leading edge erase amount of the paper.
Use	• To change the width of the area not printed along the leading edge of the paper.
Setting/ Procedure	• The default setting is “4 mm”. “4 mm” 5 mm 7 mm **NOTE** • **When “4 mm” is selected, 4.2 mm is the actual amount to be erased in print based on the control system of the machine.**

B. Finisher Adjustment

(1) Center Staple Pos

See P.33 of the SD-505 service manual.

⚠1 See P.37 of the FS-609/PK-501 service manual.

(2) Half-Fold Pos.

See P.30 of the SD-505 service manual.

⚠1 See P.37 of the FS-609/PK-501 service manual.

C. Density Adjustment

(1) Thick Paper Image Density-Yellow, Magenta, Cyan, Black

Functions	• To fine-adjust density of printed images of each color for thick paper and OHP transparencies. (Only black color adjustable for OHP transparencies)
Use	• To change the density of the printed image for each color with thick paper and OHP transparencies
Adjustment Range	Lighter (5 steps), “Std”, Darker (5 steps)
Adjustment Instructions	Light color: Press the ▲ key. Dark color: Press the ▼ key.
Adjustment Procedure	*1.* Call the Admin. Settings to the screen. *2.* Select [Expert Adjustment] → [DensityAdjustment]. *3.* Select a type of thick paper and a color that need to be adjusted. *4.* Press the ▼ or ▲ key to correct the image density.

(2) Black Image Density

Functions	• To fine-adjust the density of the printed image for a black print.
Use	• To vary the density of the printed image of a black print.
Adjustment Range	Lighter (2 steps), “Std”, Darker (2 steps)
Adjustment Instructions	If the black is light, press the ▲ key. If the black is dark, press the ▼ key.
Setting/ Procedure	*1.* Call the Admin. Settings to the screen. *2.* Select [Expert Adjustment] → [Density Adjustment] → [BlackImageDensity]. *3.* Press the ▼ or ▲ key as necessary to correct the image density.

D. Stabilization

(1) Initialize+Stabi.

Functions	• To carry out an image stabilization sequence after the historical data of image stabilization control has been initialized.
Use	• Use if an image problem persists even after [Gradation Adjustment] has been executed. • Use if tone reproduction and maximum density are faulty even after image stabilization has been executed.
Setting/ Procedure	*1.* Call the Admin. Settings to the screen. *2.* Select [Expert Adjustment] → [Stabilization] → [Initialize+Stabi.]. *3.* Press the Menu/Select key to start Stabilizer. The LED line turns off during the Stabilizer sequence. *4.* Stabilizer is completed when the LED line turns blue.

(2) Stabilization Only

Functions	• The image stabilization sequence is carried out without clearing the historical data of image stabilization control.
Use	• Use if an image problem persists even after [X-Rite Caribration] has been executed. • When [Dmax Density] and [Background Margin] of Service Mode are changed.
Setting/ Procedure	*1.* Call the Admin. Settings to the screen. *2.* Select [Expert Adjustment] → [Image Stabilization] → [StabilizationOnly]. *3.* Press the Menu/Select key to start Stabilizer. The LED line turns off during the Stabilizer sequence. *4.* Stabilizer is completed when the LED line turns blue.

E. Color Registration

(1) Color Registration Adjust (Yellow, Magenta, Cyan)

Functions	• To adjust color shift if there is any when comparing the original with printed image of the plain or thick paper.
Use	• To correct any color shift. • Able to make an individual adjustment for each paper type of plain paper, thick 1, thick 2, thick 3 and thick 4.
Adjustment Range	"0" (-6 to +6 dot)
Adjustment Instructions	If the cross deviates in the direction of A, increase the setting. If the cross deviates in the direction of B, decrease the setting.
Setting/ Procedure	*1.* Call the Admin. Settings to the screen. *2.* Select [Expert Adjustment] → [ColorRegistration]. *3.* Load tray 1 with A3/11x17 or A4/8 $^{1}/_{2}$ x11 normal paper. *4.* Select the paper type and press the Menu/Select key. *5.* Select [Print] and press the Menu/Select key. *6.* On the test pattern produced, check for deviation between the black line and the line of each color at positions X and Y. *7.* Select the color to be adjusted. *8.* Using the ▲ / ▼ key, change the setting value as necessary. (At this time, only the line of the selected color moves.) *9.* Produce another test pattern and make sure that there is no deviation. Check Procedure Check point X, Y 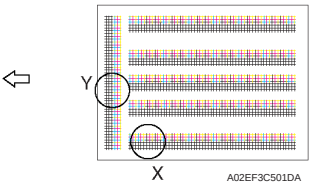 A02EF3C501DA Adjustment for X direction: Check point X If the cross deviates in the direction of A, increase the setting. If the cross deviates in the direction of B, decrease the setting. Direction of A 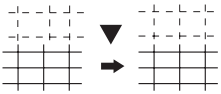 A02EF3C009DA Direction of B 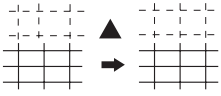 A02EF3C010DA Adjustment for Y direction: Check point Y If the cross deviates in the direction of A, increase the setting. If the cross deviates in the direction of B, decrease the setting. Direction of A 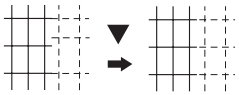 A02EF3C011DA Direction of B 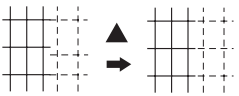 A02EF3C012DA

F. Test Pattern

(1) Gradation Pattern

Functions	• To produce a gradation pattern.
Use	• Used for checking gradation reproducibility.
Setting/ Procedure	• Select the color mode. "Cyan", Magenta, Yellow, Black

(2) Halftone Pattern

Functions	• To produce a solid halftone pattern.
Use	• Used for checking uneven density and pitch noise.
Setting/ Procedure	• Select the color mode. "Cyan", Magenta, Yellow, Black

13.10 Banner Printing

• Make the setting for banner printing.

NOTE

• Normal job cannot be accepted during banner printing mode.

Purpose/Use	• To use when printing on the long paper.
Setting/ Procedure	• The default setting is OFF. ON "OFF"

14. Adjustment item list

Adjustment/setting items				No	Replace paper feed roller	Replace separation roller assy	Install LCT	Replace IU	Replace transfer belt unit	Replace PH unit
			Replacement part/Service job							
Service Mode	Machine	Printer Area	Print Positioning: Leading Edge	1						(3)
			Print Positioning: Side Edge	2			❍			(4)
		LD adjustment	LD lightness balance adjust.	3						(2)
	State Confir-mation	Memory/ HDD	HDD R/W Check	4						
			HDD Format	5						
		Table Number		6						
	Firmware Version			7						
	System 1/2	Re-entry of setting values		8						
		Serial Number		9						
	Counter	Life	Counter Clear	10	❍	❍				
	Image Process Adjustment		X-Rite Caribration	11				△	△	
	Enhanced Security		NVRAM Data Backup	12						
Re-entry of Utility settings				13						
Re-entry of Enhanced Security settings				14						
PH skew adjustment				15						(1)
F/W upgrading				16						
Remounting of NVRAM (MFP board)				17						
Replace transfer belt unit				18						

NOTE

△: When customer needs high-quality color printing, performing calibration with X-Rite is recommended.

- This table shows the adjustment items that are required when a part of the machine has been replaced. Priority order, if applicable, during the adjustment procedures is indicated by the corresponding number in the parentheses.

No	Replace printer control board	Replace MFP board	Replace image processing board	Replace IDC/registration sensor/F,R	Replace hard disk	Execute initialize	Execute add. option	Execute F/W update
1								
2								
3								
4					(2)			
5					(1)			
6						(2)		
7							❍	❍
8						(4)		
9						(3)		
10								
11		△						
12		(4)						
13						(1)		
14						(5)		
15								
16	❍	(2)	❍					
17		(1)						
18				❍				

15. Service Mode

15.1 Service Mode function setting procedure

NOTE

- **Ensure appropriate security for Service Mode function setting procedures. They should NEVER be shown to any unauthorized person not involved with service jobs.**

15.1.1 Procedure

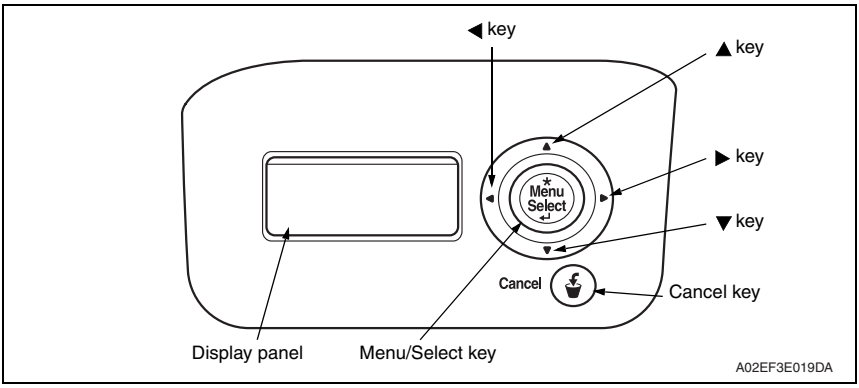

1. Make sure that the default screen (Ready to Print) is being displayed, and press the Menu/Select key on the control panel.
2. Display the Service Mode using ▲, ▼ keys.
3. Press ▶ key to open the password screen.
4. Enter the password using ▲, ▼, ▶, and ◀ keys.
5. Press the Menu/Select key to set the password.

NOTE

- **When selecting [CE Authentication] under [Enhanced Security] available from Service Mode, authentication by CE (Service) password is necessary.**
  Enter the 8 digits CE (Service) password, and press the Menu/Select key.
  (The initial setting for CE (Service) password is "92729272.")
- **When the following setting is set to "ON", CE password authentication is necessary.**
  [Admin. Settings] → [Security Settings] → [EnhancedSecurity]
- **If a wrong CE (Service) password is entered, re-enter the right password. The machine will not enter Service Mode unless the CE (Service) password is entered correctly.**
  When the following setting is set to "Mode 2", operation will be prohibited since it indicates authentication failure by failing to enter the correct CE (Service) password within the specified number of times.
  [Admin. Settings] → [Security Settings] → [Security Details] → [Release Time]
  See P.273
- **The service code entered is displayed as "✻."**

6. Display the Service Mode item to be changed using ▲, ▼, ▶, and ◀ keys.
7. Press the Menu/Select key to set the item to be changed.

NOTE

- **Be sure to change the CE (Service) password from its default value.**

A. Exiting

- Press the Cancel key.

B. Changing the setting value in Service Mode functions

- Enter the target value using ▲, ▼ keys.
- Press ▶ key to shift to the next digit.
- Enter the target value using ▲, ▼ keys.
- Repeat the steps 2 and 3 to enter all the necessary items.
- Press the Menu/Select key to enter the setting.

15.2 Service Mode function tree

NOTE

- **Some of these functions can be set or checked only with the jig software. For details, see the function tree of the jig software.**
  P.299

*1: It will be displayed only when the [Internet ISW Set] is set to “ON.”
*2: Unavailable when Data Capture is prohibited on the utility mode
*3: It will be displayed only when the optional finisher is mounted.

Service Mode			Ref. Page
System Settings	Destination		P.235
	Enter Serial No.		P.235
	Initialize	Data Clear	P.236
		SystemError Clear	P.236
	Foolscap Size		P.236
	Don’t go to Sleep		P.236
	Image Controller	Select Controller	P.237
		Controller Mode	P.237
	Unit Replacement	Toner Cartridge	P.237
		Waste Toner Box	
		Imaging Unit	
		Punch Scrap Box	
	LCT Size Setting		P.238
	Data Capture *2		P.238
	SoftwareSWSetting		P.240
	Enter Setup Date		P.241
	Comm. System	CommSystemSetting	P.241
		CommSystemStatus	
	Option Setting	HDD Installation	P.242
	Maintenance Ctr	Max Allowance	P.242
		Clear Counter	
		Count Start Data	
	IU Yield Setting		P.243
	Change WarmupTime		P.243
	StatusLED Setting	Paper Remaining	P.244
	TonerNearEmpty		P.244
	AuthDeviceSetting	Auth. Mode	P.245
		Shooting Timeout	

Service Mode			Ref. Page
System Settings	Inferior Cut	Bypass	P.245
		Tray 1	
		Tray 2	
		Tray 3	
		Tray 4	
		LCT	
		CenterStaple Fold	
		Staple	
Clear Counter	Yield Counter	All	P.246
		Bypass	
		Tray 1	
		Tray 2	
		Tray 3	
		Tray 4	
		LCT	
		Finisher	
	JAM		P.246
	CounterSer.called		P.246
	Warning		P.246
	Counter for Mode		P.246
	TimeSeriesSerCall		P.247
	Time series JAM		P.247
List Output	Management List		P.248
	Adjustment List		P.248
Machine Status	HDD Format	Logical Format	P.249
		Physical Format	
	Memory Check		P.249
Test Mode	Running Mode		P.250
	Gradation		P.250
	Halftone Pattern		P.251
MachineAdjust-ment	Fusing Temperature	Heated Side	P.252
		Pressurized Side	
	Fusing Speed		P.253
	Printer Area	Leading Edge Adj.	P.254
		Centering	P.255
		Leading(Duplex)	P.256
		Centering(Duplex)	P.257
		Vertical Adj.	P.258
		EraseLeadingEdge	P.258

Service Mode				Ref. Page
MachineAdjust-ment	Print Regist Loop	Bypass		P.259
		Tray 1		
		Tray 2/3/4 LCT		
		Duplex		
	Color Reg.	Yellow		P.260
		Magenta		
		Cyan		
	LD Adjust	LD Rad delay Adj		P.261
		LD Light balance		P.261
	BypassTray Adjust			P.262
	Exhaust Fan Delay			P.262
ProcessAdjust-ment	Dmax Density			P.263
	TCR Level Setting			P.263
	Background Margin			P.264
	TransferOutputAdj	1st Transfer		P.264
		2nd Transfer		P.265
	Stabilization	Initialize+Stabi.		P.265
		StabilizationOnly		P.265
	DensityAdjustment	Thick/Yellow		P.266
		Thick/Magenta		
		Thick/Cyan		
		Thick/Black		
		BlackImageDensity		P.266
	Replenish Toner			P.266
	Bias Choice			P.266
Finisher Adjust *3	CB-FN Adjust	Center Staple Pos		P.267
		Half-Fold Pos.		
		Punch Reg. Loop		
		PunchStopPosition		
1	FN-X3 Adjust	Center Staple Pos		
		Half-Fold Pos.		
	Punch Option	Punch Kit Type		
		# of Punch-Holes		
Internet ISW	Internet ISW Set			P.268
	HTTP Settings *1	DataRetrievalSet		P.268
		Proxy Connection		P.268
		Proxy Server	Server Address	P.268
			Port Number	
		Proxy Auth.	Auth. Settings	P.269
			Auth. Login Name	
			Auth. Password	
		ConnectionTimeout		P.269

Service Mode					Ref. Page
Internet ISW	FTP Settings *1	DataRetrievalSet			P.269
		Proxy Connection			P.269
		Proxy Server			P.269
		ConnectionSetting			P.270
	Forward AccessSet *1	User ID			P.270
		Password			P.270
		URL			P.270
		File Name			P.270
	Download *1				P.271
Security Settings	Admin. Password				P.272
	Service Password				P.272
	Data Backup				P.272
	Admin.AuthLockREL				P.273
	Release Time				P.273
CS Remote Care	System Settings				P.283
	ID Code				P.283
	Detail Settings	Basic Settings	Center ID		P.284
			Device CD		
			E-mail		
			Encryption		
			Schedule	Schedule 1	
				Schedule 2	
				Schedule 3	
			Notification Item	Not Set	
			Center Tel Number		
			Device Tel Number		
			Initial TX		
		Date/Time Settings	Date Setting		P.285
			Time Setting		
			Time Zone Setting		
		RAM Clear			P.285
		Print Comm.Log			P.285
		SoftwareSW Setting	Set by Bit		P.285
			Set by Hex		
		Response Timeout			P.285
		AT command			P.286
	Comm. Status				P.283

Service Mode					Ref. Page
CS Remote Care	Server Settings	RX Sever	POP3 Server	Enter IP address	P.286
				Enter FQDN	
			POP3 Login Name		P.286
			POP3 Password		P.286
			POP3 Port Number		P.286
		RX Settings	E-mail Setting		P.287
			AutoArrival Check	Check Setting.	P.287
				Check Interval.	
			ConnectionTimeout		P.287
			APOP Auth.		P.287
		TX Settings	SMTP Sever	Enter IP address	P.287
				Enter FQDN	
			SMTP Port Number		P.288
			ConnectionTimeout		P.288
			Auth. Settings	Auth. Method	P.288
				POP before SMTP	
				SMTP Auth.	
		CommunicationTest			P.288
		Data Initialized			P.288

* The function tree is shown to comply with the format displayed on the screen.

15.3 System Settings

15.3.1 Destination

Functions	• To make the various settings (language, paper size, fixed zoom ratios, etc.) according to the applicable marketing area.
Use	• Upon setup.
Setting/ Procedure	• Select the applicable marketing area and press the Menu/Select key to set the marketing area. Japan US Europe Other 1 Other 2 Other 3 Other 4 ✻ These are the languages that can be selected on the Utility screen according to different marketing area settings:

Japan	English, French, German, Italian, Spanish, Dutch, Portuguese, Czech, Japanese
US	
Europe	
Others 1	
Others 2	
Others 3	
Others 4	

15.3.2 Enter Serial No.

Functions	• To register the serial numbers of the machine and options. • The numbers will be printed on the list output. • To use the serial number as Machine ID during CS Remote Care communication.
Use	• Upon setup. **NOTE** **• When power switch was turned ON while the serial No. was not entered, the message to require entering the serial No. will be displayed.** **• Do not change the serial number registered in the machine. If memory data is lost and entering the serial number is required, enter the original correct serial number.** **Be careful to enter the correct serial number since characters other than alphanumeric can be also entered. CSRC communication is not available if a wrong serial number is entered.**
Setting/ Procedure	• Type the serial number.

15.3.3 Initialize

A. Data Clear

Functions	• To initialize the setting data.
Use	• To clears the setting data. For details on items to be cleared, see “Contents to be cleared by reset function.” See P.388 **NOTE** • **When removing or installing the hard disk after registering the data below, be sure to clear the data.** **Referring data: One-touch registration, user authentication/account track.**
Setting/ Procedure	*1.* Select the key as follows. [Service Mode] → [System Settings] → [Initialize] → [Data Clear] → [Start]. *2.* Press the Menu/Select key. *3.* When [Completed. Please turn power OFF and ON.] is displayed, turn off the power switch and turn it on again more than 10 seconds after.

B. System Error Clear

Functions	• To reset the trouble data.
Use	• Use to clear the [Jam], [Trouble], [Error] displays, and other improper displays. For details on items to be cleared, see “Contents to be cleared by reset function.” See P.388
Setting/ Procedure	*1.* Call the Service Mode to the screen. *2.* Select the key as follows. [Service Mode] → [System Settings] → [Initialize] → [SystemError Clear] → [Start]. *3.* Press the Menu/Select key. *4.* When [Completed. Please turn power OFF and ON.] is displayed, turn off the power switch and turn it on again more than 10 seconds after.

15.3.4 Foolscap Size

Functions	• To set the size for foolscap paper.
Use	• Upon setup. • To change the size for foolscap paper.
Setting/ Procedure	• Select the size from among the following five. 220x330mm 8 1/2x13 8 1/4x13 8 1/8x13 1/4 8x13

15.3.5 Don’t go to Sleep

Functions	• To display the option of “OFF” for the sleep mode setting screen available from user settings.
Use	• To display the option of “OFF” for the sleep mode setting. **NOTE** • **The sleep mode will begin in 48 hours even if it sets it to “OFF.”**
Setting/ Procedure	• The default setting is “Restrict.” Allow “Restrict”

15.3.6 Image Controller

A. Select Controller

Functions	• To set the type of the controller.
Use	• When setting up the controller.
Setting/ Procedure	• Select the controller to be used. "Controller 0" : The standard controller is used. Controller 1 : undefined. Controller 2 : undefined. Controller 3 : undefined. Others : undefined. **NOTE** **• When the following setting is "ON", this setting should be set to "Controller 0".** **[Admin. Settings] → [Security Settings] → [EnhancedSecurity] When [EnhancedSecurity] is set to "ON", this setting cannot be changed.** **• After changing setting, make sure to turn off the power switch and turn it on again more than 10 seconds after.**

B. Controller Mode

Functions	• [Controller Mode] appears when [Others] is selected.
Use	• When setting up the controller.
Setting/ Procedure	* This setting is available when the Select controller setting is set to "Others." Mode 1: undefined. Mode 2: undefined. Mode 3: undefined.

15.3.7 Unit Replacement

Functions	• To select who is to replace a unit. • When the unit life arrives, the warning display is intended for the specific person who is going to replace the unit. When "User" is selected : Printing is inhibited. When "Service" is selected: Life warning.
Use	• Upon setup
Setting/ Procedure	• The following are the default settings: US, Japan, Others 4 Europe, Others1/2/3 Toner Cartridge : "User" Service "User" Service Waste Toner Box : User "Service" "User" Service Imaging Unit : User "Service" "User" Service Punch Scrap Box : User "Service" "User" Service

15.3.8 LCT Size Setting

Functions	• To set the paper size for the LCT.
Use	• Use to change the paper size for the LCT (PC-405).
Setting/ Procedure	• The default setting depends on the setting made for the applicable marketing area. A4 8 1/2x11

15.3.9 Data Capture

Functions	• When an error occurs, it acquires the print job data in order to analyze the cause of the error.
Use	• When an error occurs, this will be used to analyze the cause of the error according to the print job data.
Setting/ Procedure	• The default setting is "OFF." ON "OFF" **NOTE** • **The following conditions are necessary for this function.** **When selecting [Security Settings] → [Security Details] → [PrintDataCapture] in Admin. Settings, [Allow] must be set.** **The hard disk must be mounted to the machine.** *1.* Select [Service Mode] → [System Settings] → [Data Capture]. Select [ON]. (While the Data Capture setting is [ON], the print job data from the PC will be stored in the hard disk.) **NOTE** • **The original offset value can be disabled to address image failure and other problems caused by individual CCD performance difference.** *2.* Check the IP address of the machine. *3.* Connect the PC (Windows) and the machine with ethernet cable. *4.* Start the DOS command prompt of the PC, and specify the IP address of the machine to start FTP. 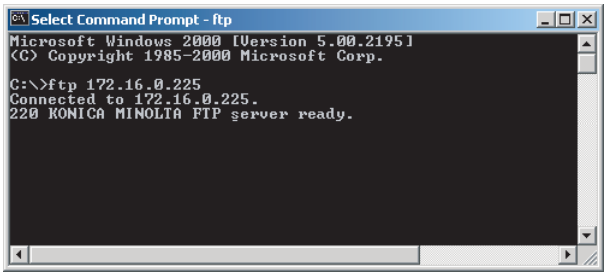 4037F3E538DA

Setting/ Procedure	

5. Input the user name and the password.
User name: capture
Password: sysadm

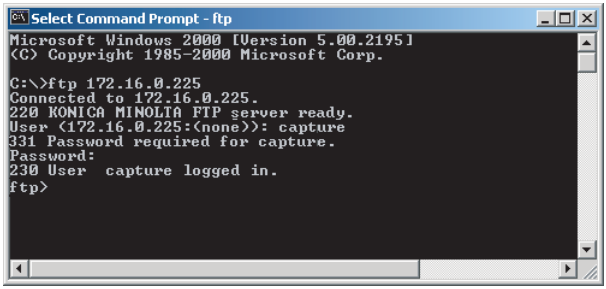

4037F3E539DA

6. Using the “ls” command, display the list of the file available for capture.

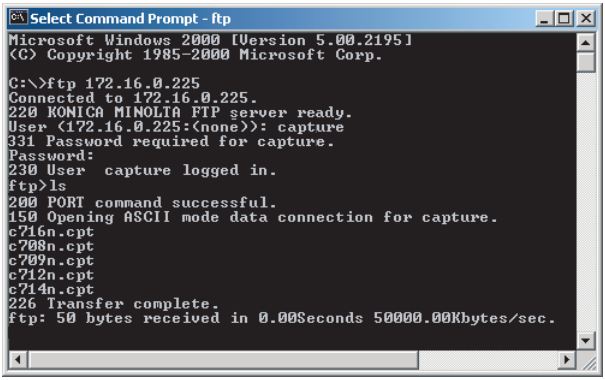

4037F3E540DA

7. Using the “binary” command, set the File transfer mode to the binary transfer.

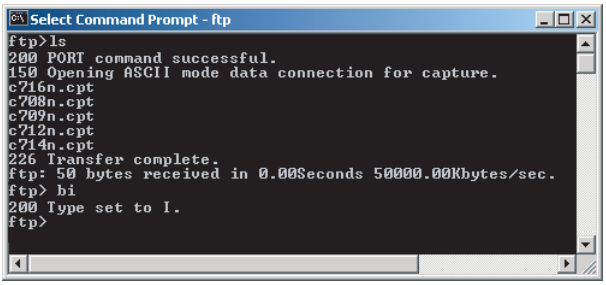

4037F3E541DA

Setting/ Procedure	*8.* Using the “get” command, transfer the data for capture to PC.

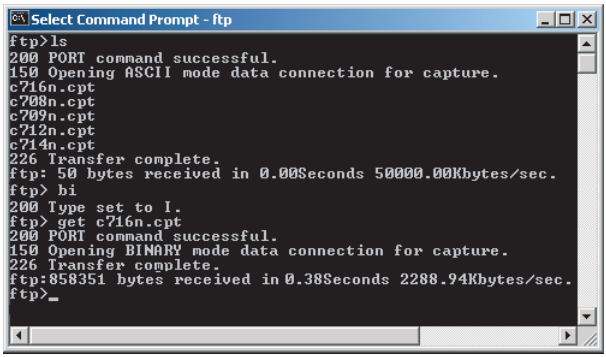

4037F3E542DA

9. Finish the command prompt.

NOTE

- **After receiving capture data, select [Admin. Settings] → [Security Settings] → [Security Details], and select [Restrict] for print data capture in order to delete the job data stored in the hard disk.**
  When HDD Format or Overwrite HDD data is performed, job data is deleted.

15.3.10 Software SW Setting

Functions	• To set the operating characteristic of each function from software switch depending on what types of printing are normally made.
Use	
Setting/ Procedure	*1.* Select [SoftwareSWSetting]. *2.* Enter the intended switch number using ▲ and ▼ keys and press the Menu/Select key. *3.* Select [Set by Bit]. *4.* Use ◀ or ▶ to select a bit. To set the bit, enter 0 or 1 using ▲ and ▼ keys. *5.* To set the bit in hex, select [Set by Hex] and use ▲ and ▼ keys to enter numbers and characters. *6.* Press the Menu/Select key.

A. Setting items in the software switch setting

(1) ACS mode control change

Functions	• To change the 1st image transfer roller pressure/retraction operation control in ACS mode.
Use	• When a user makes mainly monochrome prints, selecting 01 may allow avoiding the PC drum wear-out caused by unnecessary rotation of color imaging units. Set by Hex 00 : The color print (pressed) position is set as the default position of the 1st image transfer roller. (Default setting) Set by Hex 01 : The monochrome print (retracted) position is set as the default position of the 1st image transfer roller.
Setting/ Procedure	*1.* Select [SoftwareSWSetting]. *2.* Enter "50" using ▲ and ▼ keys. *3.* Select [Set by Hex] and enter "00" or "01" using ▲ and ▼ keys. *4.* Press the Menu/Select key.

15.3.11 Enter Setup Date

Functions	• To register the date the main body was installed.
Use	• Upon setup.
Setting/ Procedure	*1.* Select the key as follows. [Service Mode] → [System Settings] → [Enter Setup Date]. *2.* Enter the date (Year 4 digit → Month 2 digit → date 2 digit) using ▲ and ▼ keys. *3.* Press the Menu/Select key to set the date of installation.

15.3.12 Comm. System

Functions	• Not used.
Use	
Setting/ Procedure	

15.3.13 Option Setting

A. HDD Installation

Functions	• To set when the hard disk is mounted.
Use	• Use when setting up the hard disk is mounted.
Setting/ Procedure	• The default settings are “Unset.” Set “Unset” **NOTE** • **When the setting has been changed, turn off the power switch and turn it on again more than 10 seconds after.** • **If “Installed” is selected, select [User Settings] → [System Settings] → [Power-Save Setting] → [SleepMode Setting] and set [SleepMode Setting] to “ON.”** • **If “Not Installed” is selected, select [User Settings] → [System Settings] → [PowerSave Setting] → [SleepMode Setting] and set [SleepMode Setting] to “OFF.”**

15.3.14 Maintenance Ctr

Functions	• To set a count value for maintenance of any given part.
Use	• When any given part is replaced.
Setting/ Procedure	<Max Allowance> • Enter the maintenance counter value using ▲ and ▼ keys. <Clear Counter> • Counts up when a sheet of paper is fed through the machine. • Select [Start] and press the Menu/Select key will clear the count. <Count Start Date> • Shows the date when the maintenance counter is started.

15.3.15 IU Yield Setting

Functions	• To set the life threshold for imaging units.
Use	• Use this setting when a gap appears between the actual life value of imaging unit and the life specification value due to the way * a machine is used. • Comparing the PC drum rotation time with the PC drum rotation time calculated based on the number of printed pages, the machine detects the end of unit life using the one that reaches the life specification value earlier. This setting aims to extend the life threshold for the PC drum rotation time and achieve a longer imaging unit life. Normal : detects the end of life when the life specification value is reached. Long : detects the end of life when a value greater (longer) than the life specification value is reached. *The product specification value is determined based on what types of printing are made on the machine. If the types of printing made on the machine are different from the specified printing conditions, the life value of the imaging unit tends to be different from the life specification value. See conditions for life specification values in the service manual titled maintenance for more information on printing conditions. See P.18 **NOTE** **• When "Long" is selected, images printed after the life specification value is out of guarantee.** **The life counter value of imaging unit is accessed from [Service Mode] → [Counter] → [Life] of the jig software. It is also described in the time series life counter of the Management List.** **• Before making this setting, be sure to check that the machine does not display any message that warns each of imaging units, fusing unit, or image transfer belt unit reaches their life value.**
Setting/ Procedure	• The default setting is Normal. "Normal" Long

15.3.16 Change Warmup Time

Functions	• To change the warm up time.
Use	• With the warm-up time set to mode 1, if monochrome printing is made immediately after a warm-up cycle and a paper curl problem occurs, change the setting to mode2. • With the use of recycled or low quality paper, if a paper curl problem or other paper curl related failures occur immediately after a normal warm-up cycle, set the setting to mode 3 or mode 4. Other paper curl related failures include jam, paper ejection failure, and punch/staple/fold position failure. The following table shows the warm-up time (normal warm-up) in each mode. Mode 1, Mode 2, Mode 3: Monochrome: 75 sec./Color: 75 sec. Mode 4: Monochrome: 130 sec./Color: 130 sec.
Setting/ Procedure	• The default setting is Mode 1. "Mode 1" Mode 2 Mode 3 Mode 4

15.3.17 Status LED Setting

A. Paper Remaining

Functions	• To set how to display main body statuses on the machine state LED (state display lamp, paper empty lamp).
Use	• Each of Type1 and Type2 has the following LED display forms.

Machine State LED Setting		Type1	Type2
Amount of paper remaining (Tray 1 and 2)	100 % to 66 % of paper remaining	Unlit	Unlit
	Near empty	Blinking	Unlit
	Empty	Lit	Lit
	Being lifted up Door opened or closed	Unlit	Unlit
Amount of paper remaining (Tray 3 and 4, LCT)	100 % to 33 % paper remaining	Unlit	Unlit
	33 % to near empty	Blinking	Unlit
	Near empty	Blinking	Unlit
	Empty	Lit	Lit
	Being lifted up Door opened or closed	Unlit	Unlit

Setting/ Procedure	• Each default setting is Type 1. "Type 1" Type 2 **NOTE** • **[Type 2] is the default setting, if the firmware of function enhanced version 1 or later is mounted.**

△1

15.3.18 Toner Near Empty

Functions	• To set whether or not the toner near empty is display.
Use	• Upon setup
Setting/ Procedure	• The default setting is ON. "ON" OFF

15.3.19 Auth. Device Setting

- It will not be displayed when [HDD Installation] is set to “Not Installed”.
- It will be displayed only when the following setting shows that [General Settings] is set to “ON (MFP)”.
  PageScope Web Connection → [Administrator mode] → [Security] → [Authentication] → [User Auth/Account Track]

Functions	• To set whether or not the authentication device is installed.
Use	• Set when the authentication unit (biometric type or card type) is mounted. Biometric : Uses biometrics (finger vein) authentication system Card : Uses IC card authentication system • When selecting biometrics, set a film timeout interval.
Setting/ Procedure	<Auth. Mode> • The default setting is Not Installed. Card Biometric “Not Installed” <Shooting Timeout> • The default setting is 10 sec. 10 sec (5 to 60 sec)

15.3.20 Inferior Cut

Functions	• Individual units and options have a set or unset setting for the trouble isolation function.
Use	• When a problem occurs, this function enables the continuous use of the units that are not affected by separately controlling them and isolating other units that have a problem. • The machine isolates only units that have a “ON” setting. **NOTE** • **The malfunction detection mechanism is not applied to units and options that are being isolated.** • This function can be selected for the following units and options. Tray 1, Tray 2, Tray 3, LCT, manual, Half-Fold/Tri-Fold Center Stapling and Staple.
Setting/ Procedure	• The default setting is OFF for individual units and options. ON “OFF” • After changing the setting and turn the power switch OFF and ON to make the new setting effective.

15.4 Clear Counter

15.4.1 Yield Counter

Functions	• To clear the count of each counter.
Use	• When each of the maintenance parts is replaced.
Setting/ Procedure	• To clear the count of a counter, select the specific part and then select [Start] and press the Menu/Select key. • Bypass : Number of sheets of paper fed from the bypass • Tray 1 : Number of sheets of paper fed from tray 1 • Tray 2 : Number of sheets of paper fed from tray 2 • Tray 3 : Number of sheets of paper fed from tray 3 • Tray 4 : Number of sheets of paper fed from tray 4 • LCT : Number of sheets of paper fed from the LCT • Finisher : Number of sheets of paper fed out of the finisher

15.4.2 JAM

Functions	• To clear the count of each counter.
Use	• To clear the number of paper misfeeds that have occurred.
Setting/ Procedure	• Select [Start] and press the Menu/Select key.

15.4.3 Counter Service Called

Functions	• To clear the count of each counter.
Use	• To clear the number of malfunctions that have occurred.
Setting/ Procedure	• Select [Start] and press the Menu/Select key.

15.4.4 Warning

Functions	• To clear the count of each counter.
Use	• To clear the number of warning conditions that have been detected.
Setting/ Procedure	• Select [Start] and press the Menu/Select key.

15.4.5 Counter for Mode

Functions	• To display the printed pages in the following specified modes; printer. It also displays the count value of using the specified mode.
Use	• Use to clear the printed pages in the following specified modes; printer, as well as No. of times each mode was used, in order to know the using condition.
Setting/ Procedure	• Select [Start] and press the Menu/Select key.

15.4.6 Time Series Ser Call

Functions	• To display the trouble history in chronological order.
Use	• Use to clear the trouble history in chronological order.
Setting/ Procedure	• Select [Start] and press the Menu/Select key.

15.4.7 Time series JAM

Functions	• To display the jam history in chronological order.
Use	• Use to clear the jam history in chronological order. **NOTE** • **[Code] displayed on the screen of JAM history indicates JAM code. For details of JAM code, see "Trouble shooting."** See P.395
Setting/ Procedure	• Select [Start] and press the Menu/Select key.

15.5 List Output

15.5.1 Management List

Functions	• To produce an output of a list of setting values, adjustment values, total counter values, and others.
Use	• At the end of setup or when a malfunction occurs.
Setting/ Procedure	*1.* Load the A4S plain paper to a paper source. *2.* Select 1-Sided Print or 2-Sided Print. *3.* Press the Menu/Select key, which will let the machine produce the list. • The time-of-day and date will also be printed.

15.5.2 Adjustment List

Functions	• To output the adjustment list for machine adjustment, process adjustment, etc. in Service Mode.
Use	• At the end of setup or when a malfunction occurs.
Setting/ Procedure	*1.* Load the A4S plain paper to a paper source. *2.* Select 1-Sided Print or 2-Sided Print. *3.* Press the Menu/Select key, which will let the machine produce the list. • The time-of-day and date will also be printed.

15.6 Machine Status

A. HDD Format

Functions	• To format the hard disk. • The function proceeds in the order of physical format to logical format. • If the hard disk is yet to be formatted, the malfunction code "C-D010" will appear. Ignore this code and continue with the formatting procedure.
Use	• When the hard disk is mounted. • When the hard disk is to be initialized. (Physical format to logical format)
Adjustment Procedure	*1.* Select [Service Mode] → [Machine Status] → [HDD Format]. **(1) Physical Format** *1.* Select [Physical Format] → [Start]. *2.* Press the Menu/Select key to start the formatting sequence. *3.* The sequence will be automatically terminated as it is completed. *4.* Turn off the power switch and turn it on again more than 10 seconds after. **(2) Logical Format (only when initial is set up)** *1.* Select [Logical Format] → [Start]. *2.* Press the Menu/Select key to start the formatting sequence. *3.* The sequence will be automatically terminated as it is completed. *4.* Turn off the power switch and turn it on again more than 10 seconds after. ✻ Formatting the hard disk will erase all data contained in it.

B. Memory Check

Functions	• To check correspondence of data written to and that read from memory through write/read check. Simple Check • A check is made to see if the image data reading and writing are correctly made in a very limited area. • The progress of the check sequence is displayed in percentage. Detail Check • A check is made to see if the image data reading and writing are correctly made at the addresses and buses in all areas. • The progress of the check sequence is displayed in percentage.
Use	• If the printed image is faulty.
Adjustment Procedure	*1.* Select [Service Mode] → [Machine Status] → [Memory Check]. *2.* Select the desired type of check, either [Simple Check] or [Detail Check]. *3.* Press the Menu/Select key to start the check procedure. *4.* When the check procedure is completed, the results are shown on the screen. If the check results are NG, check the memory for connection or replace the memory with a new one. ✻ Press the Stop key to interrupt the check sequence.

15.7 Test Mode

- To check the image on the printer side by letting the machine produce various types of test pattern. It also tests the printing operation in running mode, as well as the halftone pattern function.
- The machine searches through the paper sources in the order of tray 2, tray 3, tray 4, and tray 1 for paper of the maximum size for printing.

15.7.1 Procedure for test pattern output

1. Select [Test Mode] to display the test mode menu.
2. Select the desired test pattern key.
3. Set up the desired functions and press the Menu/Select key.

15.7.2 Running Mode

Functions	• To test the printing operation in running mode.
Use	• Use to check the printing operation in running mode from each paper source.
Setting/ Procedure	• Select the paper size (Tray 1, bypass only). • Check to make sure [Cancel] of the day is highlighted, and press the Menu/Select key will stop operation.

15.7.3 Gradation Pattern

Functions	• To produce a gradation pattern.
Use	• Used for checking gradation reproducibility.
Pattern	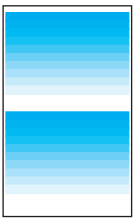 Cyan A02EF3C510DA
Setting/ Procedure	• Select the color mode. “Cyan”, Magenta, Yellow, Black

15.7.4 Halftone Pattern

Functions	• To produce a solid halftone pattern.
Use	• Used for checking uneven density and pitch noise.
Pattern	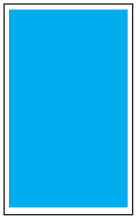 Cyan Density: 255 A02EF3C519DA
Setting/ Procedure	• Select the color mode. "Cyan", Magenta, Yellow, Black • Select the density level. 64, 128, 255

15.8 Machine Adjustment

15.8.1 Fusing Temperature

Functions	• To adjust individually the temperature of the heating roller and the fusing pressure roller for each type of paper, thereby printing with varying fusing performance under changing environmental conditions.
Use	• When fusing performance is poor, or wax streak or offset occurs when the type of paper is changed or environmental conditions change. • Use when the curling of the paper due to the paper type or environmental change occurred, or when the paper jam, as well as stapling or folding position error occurred due to the curling of the paper. • By setting the temperature higher (+), gloss of print can be improved. • By setting the temperature lower (-), exit roller mark can be reduced.
Adjustment Range	

Paper type	Setting range		step
	Heated Side	Pressurized Side	
Plain Paper	-10 °C to +5 °C	-5 °C to +5 °C	5 °C
Thick 1	-20 °C to +5 °C	-5 °C to +5 °C	5 °C
Thick 2	-20 °C to +5 °C	-5 °C to +5 °C	5 °C
Thick 3	-20 °C to +5 °C	-5 °C to +5 °C	5 °C
Thick 4	-20 °C to +5 °C	-5 °C to +5 °C	5 °C
Transparency	-20 °C to +5 °C	-20 °C to +5 °C	5 °C
Envelope	-5 °C to +5 °C	-5 °C to +5 °C	5 °C

Adjustment Instructions	If fusing performance is poor, increase the setting. If wax streaks occur, decrease the setting. If offset is poor, decrease the setting. If curling of the paper occurs, decrease the setting.
Setting/ Procedure	**NOTE** • **To adjust the fusing temperature, adjust on the heating side first. If the further adjustment is necessary, adjust on the pressure side.** *1.* Select [Service Mode] → [MachineAdjustment] → [FusingTemperature]. *2.* Select the paper type and fusing roller type (Heater Side or Pressurized Side). *3.* Enter the new setting from the ▲ and ▼ keys. *4.* Press the Menu/Select key. *5.* Output two or three test printing and check to see whether the image has any problem. *6.* Make the adjustment for each type of paper.

15.8.2 Fusing Speed

<table>
<tr><td>Functions</td><td>• To adjust the speed of the fusing drive motor so as to match the fusing speed with transport speed.</td></tr>
<tr><td>Use</td><td>• Brush effect or blurred image is evident as a result of changes in environmental conditions or degraded durability.</td></tr>
<tr><td>Variable Range</td><td>-20 to +20 (in 1 increments)</td></tr>
<tr><td>Adjustment Instructions</td><td>If brush effect is evident, vary the setting value and check for image.
If a blurred image occurs, decrease the setting.</td></tr>
<tr><td>Setting/ Procedure</td><td>1. Select [Service Mode] → [MachineAdjustment] → [Fusing Speed].
2. Select the transport speed, at which the brush effect or blurred image has occurred.
<table><tr><th>Transport speed</th><th>Paper Setting</th></tr><tr><td>166.6 mm/s</td><td>Plain paper: color/monochrome, OHF film</td></tr><tr><td>55.5 mm/s</td><td>Thick 1, Thick 2, Thick 3, Thick 4, envelope, postcard: monochrome/color</td></tr></table>3. Enter the new setting from the ▲ and ▼ keys.
4. Press the Menu/Select key.
5. Check the printed image for any image problem.</td></tr>
</table>

15.8.3 Printer Area

A. Leading Edge Adjustment

Functions	• To vary the print start position in the sub scan direction for each of different paper types in the manual bypass tray. (To adjust the timing where paper is sent out from the timing roller)
Use	• The PH unit has been replaced. • The paper type has been changed. • The printed image deviates in the sub scan direction. • A faint image occurs on the leading edge of the image. • This setting can be made independently for plain paper, Thick 1, Thick 2, Thick 3, Thick 4, transparency, and envelope.
Adjustment Specification	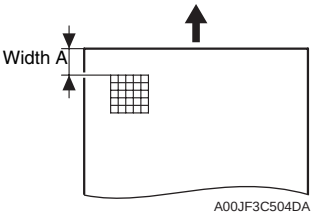 Width A on the test pattern produced should fall within the following range. Specifications: 4.2 ± 0.5 mm Setting range: -3.0 mm to +3.0 mm (in 0.2 mm increments)
Adjustment Instructions	If width A is longer than the specifications, make the setting value smaller than the current one. If width A is shorter than the specifications, make the setting value greater than the current one.
Setting/ Procedure	*1.* Place A3 paper on the manual bypass tray. *2.* Select [Service Mode] → [MachineAdjustment] → [Printer Area] → [Leading Edge Adj.]. *3.* Select the [Plain Paper]. *4.* Select [Print] and press the Menu/Select key to let the machine produce a test pattern. *5.* Check the dimension of width A on the test pattern. *6.* If width A falls outside the specified range, change the setting using the ▲ and ▼ keys. *7.* Press the Menu/Select key to let the machine produce a test pattern. *8.* Check the dimension of width A on the test pattern. *9.* If width A is outside the specified range, change the setting again and make a check again. *10.*If width A falls within the specified range, press the Menu/Select key. *11.*Following the same procedure, adjust for Thick 1 to 4, transparency, and envelope.

B. Centering

Functions	• To vary the print start position in the main scan direction for each paper source.
Use	• The PH Unit has been replaced. • A paper feed unit has been added. • The printed image deviates in the main scan direction.
Adjustment Specification	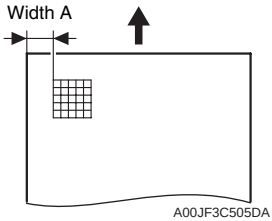 A00JF3C505DA Width A on the test pattern produced should fall within the following range. Specifications: 3.0 ± 0.5 mm Setting range: -3.0 mm to +3.0 mm (in 0.2 mm increments)
Adjustment Instructions	If width A is longer than the specifications, make the setting value smaller than the current one. If width A is shorter than the specifications, make the setting value greater than the current one.
Setting/ Procedure	*1.* Select [Service Mode] → [MachineAdjustment] → [Printer Area] → [Centering]. *2.* Select the paper source to be adjusted. *3.* Select [Print] and press the Menu/Select key to let the machine produce a test pattern. *4.* Check the dimension of width A on the test pattern. *5.* If width A falls outside the specified range, change the setting using the ▲ and ▼ keys. *6.* Press the Menu/Select key to let the machine produce a test pattern. *7.* Check the dimension of width A on the test pattern. *8.* If width A is outside the specified range, change the setting again and make a check again. *9.* If width A falls within the specified range, select the Menu/Select key. *10.*Following the same procedure, adjust for all other paper sources. (Use A4 or 8 $^{1}/_{2}$ × 11 plain paper for the bypass.)

C. Leading (Duplex)

Functions	• For individual types of paper, this function allows the adjustment of the image write start position in the sub scan direction on the 2nd side of duplex printing.
Use	• This adjustment is made when the image on the 2nd side of paper deviates from the original position in the sub scan direction. • This adjustment can be made independently for each of plain paper, thick 1, thick 2, and thick 3.
Adjustment Specification	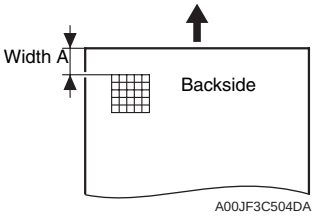 Width A on the test pattern produced should fall within the following range. Specifications: 4.2 ± 0.5 mm Setting range: -3.0 mm to +3.0 mm (in 0.2 mm increments)
Adjustment Instructions	If width A is longer than the specifications, make the setting value smaller than the current one. If width A is shorter than the specifications, make the setting value greater than the current one.
Setting/ Procedure	*1.* Place A3 paper on the manual bypass tray. *2.* Select [Service Mode] → [MachineAdjustment] → [Printer Area] → [Leading (Duplex)]. *3.* Select the [Plain Paper]. *4.* Select [Print] and press the Menu/Select key to let the machine produce a test pattern. *5.* Check the dimension of width A on the test pattern. *6.* If width A falls outside the specified range, change the setting using the ▲ and ▼ keys. *7.* Press the Menu/Select key to let the machine produce a test pattern. *8.* Check the dimension of width A on the test pattern. *9.* If width A is outside the specified range, change the setting again and make a check again. *10.*If width A falls within the specified range, press the Menu/Select key. *11.*Following the same procedure, adjust for Thick paper.

D. Centering (Duplex)

Functions	• To vary the print start position in the main scan direction for each paper source in the 2-Sided mode.
Use	• The image on the backside of the 2-sided print deviates in the main scan direction.
Adjustment Specification	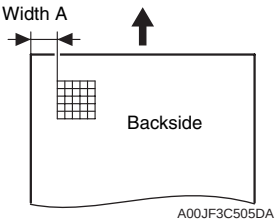 •Width A on the test pattern produced should fall within the following range. •For measurement, use the image produced on the backside of the test pattern. Specifications: 3.0 ± 0.5 mm Setting range: -3.0 mm to +3.0 mm (in 0.2 mm increments)
Adjustment Instructions	• If width A is longer than the specifications, make the setting value smaller than the current one. • If width A is shorter than the specifications, make the setting value greater than the current one.
Setting/ Procedure	*1.* Select [Service Mode] → [MachineAdjustment] → [Printer Area] → [Centering (Duplex)]. *2.* Select the paper source to be adjusted. *3.* Select [Print] and press the Menu/Select key to let the machine produce a test pattern. *4.* Check the dimension of width A on the test pattern. *5.* If width A falls outside the specified range, change the setting using the ▲ and ▼ keys. *6.* Press the Menu/Select key to let the machine produce a test pattern. *7.* Check the dimension of width A on the test pattern on the backside of the printed image. *8.* If width A is outside the specified range, change the setting again and make a check again. *9.* If width A falls within the specified range, press the Menu/Select key. *10.*Following the same procedure, adjust for all other paper sources. (Use A4 or 8 $^{1}/_{2}$ × 11 plain paper for the manual bypass tray.)

E. Vertical Adj.

Functions	• To synchronize the paper transport speed with the image writing speed.
Use	• Feed Direction Adjustment becomes necessary. • The printed image distorts (stretched, shrunk). • When the printed image is stretched in the sub scan direction. • This setting can be made independently for plain paper, Thick 1, Thick 2, Thick 3, and Thick 4.
Adjustment Specification	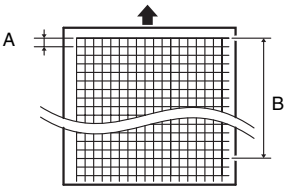 A00JF3C506DA Width A and width B on the test pattern produced should fall within the following ranges. Width A: equivalent to one grid Width B: equivalent to 48 grids Specifications A: 7.9 to 8.3 B: 389.1 to 392.1 Setting Range A, B: -7 to +7
Adjustment Instructions	If width A or B is longer than the specifications, make the setting value smaller than the current one. If width A or B is shorter than the specifications, make the setting value greater than the current one.
Adjustment Procedure	*1.* Load manual bypass tray with A3 or 11 × 17 plain paper. *2.* Select [Service Mode] → [MachineAdjustment] → [Printer Area] → [Vertical Adj.]. *3.* Select [Plain Paper]. *4.* Select [Print] and press the Menu/Select key to let the machine produce a test pattern. *5.* Check width A (equivalent to one grid) and width B (equivalent to 48 grids) on the test pattern. *6.* If width of A or B falls outside the specified range, change the setting using the ▲ and ▼ keys. *7.* Press the Menu/Select key to let the machine produce a test pattern again. *8.* Check width A and width B on the test pattern. *9.* If width A or B falls outside the specified range, change the setting value and make a check again. *10.*If width A or B falls within the specified range, press the Menu/Select key. *11.*Following the same procedure, adjust for thick paper.

F. Erase Leading Edge

Functions	• To set the leading edge erase amount of the paper.
Use	• Upon user requests, it is possible to specify the void area where image is not printed along the leading edge.
Setting/ Procedure	• The default setting is 4 mm. "4 mm" 5 mm 7 mm **NOTE** • **When "4 mm" is selected, 4.2 mm is the actual amount to be erased in print based on the control system of the machine.**

15.8.4 Printer Resist Loop

<table>
<tr><td>Functions</td><td>• To set the correction value of the paper loop length for each process speed of tray 1, tray 2 to tray 4 / LCT, bypass, and duplex.
• To adjust the length of the loop formed in paper before the registration rollers.
• Use “Paper Passage” for paper passage check.</td></tr>
<tr><td>Use</td><td>When a paper skew occurs.
When a paper misfeed occurs.</td></tr>
<tr><td>Adjustment Instructions</td><td>To decrease the loop amount: Decrease the setting value
To increase the loop amount: Increase the setting value</td></tr>
<tr><td>Adjustment Range</td><td>• The adjustable range is different depending on paper source and processing speed.
<table>
<tr><th></th><th>Tray 1</th><th>Tray 2/3/4 LCT</th><th>Duplex</th><th>Manual Tray</th></tr>
<tr><td>166.6 mm/sec</td><td>-5 to +5</td><td>-5 to +5</td><td>-5 to +5</td><td>-5 to +5</td></tr>
<tr><td>55 mm/sec</td><td>-15 to +15</td><td>-15 to +15</td><td>-8 to +8</td><td>-15 to +15</td></tr>
</table></td></tr>
<tr><td>Setting/ Procedure</td><td>1. Select [Service Mode] → [MachineAdjustment] → [Printer Resist Loop].
2. Select a paper source and a processing speed.
3. Enter the new setting from the ▲ and ▼ keys and press the Menu/Select key.</td></tr>
</table>

15.8.5 Color Registration Adjustment

A. Cyan, Magenta, Yellow

Functions	• To adjust color shift if there is any when comparing the original with printed image of the plain or thick paper.
Use	• To correct any color shift. • This setting can be made independently for plain paper, Thick 1, Thick 2, Thick 3, and Thick 4.
Adjustment Range	"0" (-6 to +6 dot)
Adjustment Instructions	If the cross deviates in the direction of A, increase the setting. If the cross deviates in the direction of B, decrease the setting.
Setting/ Procedure	*1.* Select [Service Mode] → [MachineAdjustment] → [Color Reg.]. *2.* Load manual bypass tray with A3/11 x 17 or A4/8 $^{1}/_{2}$ x 11 plain paper. *3.* Select [Print] and press the Menu/Select key. *4.* On the test pattern produced, check for deviation between the black line and the line of each color at positions X and Y. *5.* Select the color to be adjusted. *6.* Using the ▲ and ▼ keys, change the setting value as necessary. (At this time, only the line of the selected color moves.) *7.* Produce another test pattern and make sure that there is no deviation. Check Procedure Check point X, Y 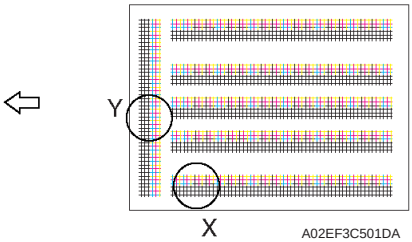 A02EF3C501DA Adjustment for X direction: Check point X If the cross deviates in the direction of A, increase the setting. If the cross deviates in the direction of B, decrease the setting. Direction of A 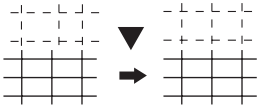 A02EF3C009DA Direction of B 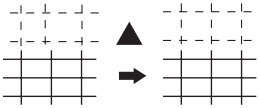 A02EF3C010DA Adjustment for Y direction: Check point Y If the cross deviates in the direction of A, increase the setting. If the cross deviates in the direction of B, decrease the setting. Direction of A 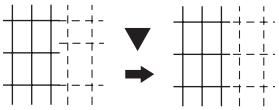 A02EF3C011DA Direction of B 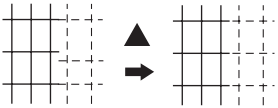 A02EF3C012DA

15.8.6 LD adjustment

A. LD delay adjust.

Functions	• Not used.
Use	
Setting/ Procedure	

B. LD lightness balance adjust.

Functions	• This function adjusts the LD lightness balance between the two LDs to correct the difference of LD lightness between the LDs.
Use	• This setting is made after the PH unit or the service EEPROM board is replaced. • This adjustment is made to prevent uneven density in highlighted halftone area being caused by inappropriate laser intensity.
Setting/ Procedure	*1.* Select [Service Mode] → [MachineAdjustment] → [LD Adjust] → [LD Light balance]. *2.* Select [Print] → [For adjustment] and press the Menu/Select key. *3.* The test print includes seven rows of patterns produced with different levels of LD2 light intensity towards LD1. 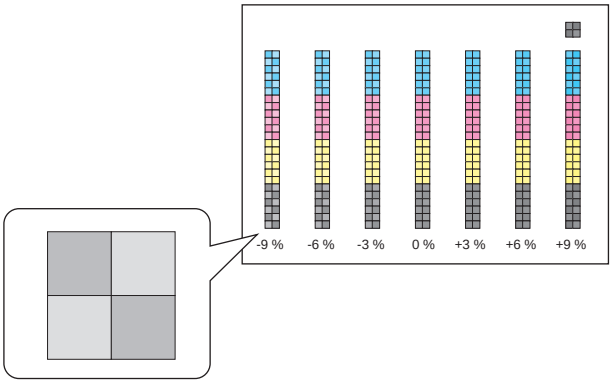 A00JF3C527DA *4.* Three squares each made up by four small squares are printed with the different four colors. The two small squares diagonal to each other are printed using the same LD. Depending on individual print timing, it is decided that which pair of small squares corresponds to which LD. The pair of small squares where image density changes corresponds to LD2. *5.* From the test pattern, select the pattern where the least density difference appears between LD1 and LD2 for each color. *6.* Enter the adjustment value corresponding to the pattern you selected (see the above illustration) or a value close to the adjustment value using the ▲ and ▼ keys on the panel. *7.* Select [For effectiveConf] and press the Menu/Select key. *8.* Check that LD2 small squares have no image noise of woodgrain.

15.8.7 Bypass Tray Adjust

Functions	• To set the maximum width and the minimum width for the manual bypass paper size unit of the manual bypass guide.
Use	• Use when the manual bypass paper size unit of the manual bypass guide has been changed. • Use when a false paper size is displayed when the manual bypass is used.
Setting/ Procedure	*1.* Select [Service Mode] → [MachineAdjustment] → [BypassTray Adjust]. *2.* Select [Maximum Width]. *3.* Load the bypass tray with paper having a width of 297 mm. *4.* Press the Menu/Select key and check that the results are [OK]. *5.* Select [Minimum Width]. *6.* Load the bypass tray with paper having a width of 100 mm. *7.* Press the Menu/Select key and check that the results are [OK]. ✻ Make the adjustment again if the results are [NG].

15.8.8 Exhaust Fan Delay

Functions	• To set the period of time before the exhaust fan motor stops.
Use	• At the completion of a print job/image stabilization or at jam/malfunction, the fan motor rotating at full speed comes to a stop. The period of time before the fan motor stops can be delayed so that ozone left around the PC drum can be discharged.
Setting/ Procedure	• 0 to 15 (Min.) can be entered with the ▲ and ▼ keys. (Default is 0.) **NOTE** • **When this setting is set to 0 Min., the fan motor runs for 5 seconds before it stops.**

15.9 Process Adjustment

15.9.1 Dmax Density

Functions	• To adjust gradation, color, and image density to target reproduction levels by varying the maximum amount of toner sticking to paper through auxiliary manual fine-adjustment of gamma of each color after gradation adjust.
Use	• An image quality problem is not corrected even after gradation adjust has been run.
Adjustment Range	• The default setting is 0. -10 to +10 (step: 1 *) *: 1 step corresponds to 0.03 in density difference.
Adjustment Instructions	To increase the maximum amount of toner sticking, increase the setting value. To decrease the maximum amount of toner sticking, decrease the setting value.
Setting/ Procedure	*1.* Select [Service Mode] → [ProcessAdjustment] → [Dmax Density]. *2.* Select the color to be adjusted. *3.* Enter the new setting from the ▲ and ▼ keys. *4.* Press the Menu/Select key to return to the [ProcessAdjustment] menu screen. *5.* Select [Stabilization]. *6.* Select [StabilizationOnly]. *7.* Press the Menu/Select key to validate the adjustment value. *8.* Check the printed image for any image problem. **NOTE** • **If the setting value has been changed, be sure to run an image stabilization sequence to make valid the new value.**

15.9.2 TCR Level Setting

Functions	• To adjust the T/C control level when an abnormal image density occurs as a result of a change in the amount of charge of toner and carrier due to an environmental change.
Use	• Use when T/C changes due to changes in environmental conditions of the user site.
Adjustment Range	• The default setting is 0. -3 to +3 (1 step :0.5 %, Center value 0 corresponds to 7 % T/C ratio.)
Adjustment Instructions	To increase T/C, increase the setting value. To decrease T/C, decrease the setting value.
Adjustment Procedure	*1.* Select [Service Mode] → [ProcessAdjustment] → [TCR Level Setting]. *2.* Select the color to be adjusted. *3.* Enter the new setting from the ▲ and ▼ keys. *4.* Press the Menu/Select key to validate the adjustment value. *5.* Check the printed image for any image problem.

15.9.3 Background Margin

Functions	• To adjust the highlight portion (fog level) to the target reproduction level by making an auxiliary manual fine-adjustment of γ of each color after gradation adjust.
Use	• Use when a foggy background occurs due to a printer problem.
Adjustment Range	• The default setting is 0. -5 to +5 (step: 1)
Adjustment Instructions	To make the background level foggier, decrease the setting value. To make the background level less foggy, increase the setting value.
Setting/ Procedure	*1.* Select [Service Mode] → [ProcessAdjustment] → [Background Margin]. *2.* Select the color to be adjusted. *3.* Enter the new setting from the ▲ and ▼ keys. *4.* Press the Menu/Select to return to the [ProcessAdjustment] menu screen. *5.* Select [Stabilization]. *6.* Select [StabilizationOnly]. *7.* Press the Menu/Select key to validate the adjustment value. *8.* Check the printed image for any image problem. **NOTE** • **If the setting value has been changed, be sure to run an image stabilization sequence to make valid the new value.**

15.9.4 Transfer Output Adj

A. 1st Transfer

Functions	• Adjust the output value for the 1st image transfer voltage.
Use	• To use when white spots appeared.
Adjustment Range	• The default setting is 0. -8 to +7 (step: 1)
Adjustment Instructions	Adjust the output value for the 1st image transfer voltage by; Increasing it: Increase the setting value (white spots will decrease) Decreasing it: Decrease the setting value
Setting/ Procedure	*1.* Select [Service Mode] → [Test Mode] → [Halftone Pattern] to output the red or green test pattern. See P.251 *2.* When the test pattern image has white spots, adjust with the following procedure. *3.* Select [Service Mode] → [ProcessAdjustment] → [TransferOutputAdj] → [1st Transfer]. *4.* Select the color. *5.* Change the setting value using the ▲ and ▼ keys. *6.* Press the Menu/Select key to set the adjustment value. Gradually increase the adjustment value to the acceptable white spots level while checking the test pattern. **NOTE** • **PC Drum memory may occur by taking measure to white spots occurred by increasing the 1st image transfer voltage to adjust it.** **Check the image on the test print when adjusting.**

B. 2nd Transfer

Functions	• Adjust the 2nd image transfer output (ATVC) on the 1st page and the 2nd page for each paper type.
Use	• To use when the transfer failure at the trailing edge occurs.
Adjustment Range	• The default setting is 0. -8 to +7 (step: 1)
Adjustment Instructions	To increase the ATVC value (in the direction of a foggier image), increase the setting value. To decrease the ATVC value (in the direction of a less foggy image), decrease the setting value.
Setting/ Procedure	*1.* Select [Service Mode] → [ProcessAdjustment] → [TransferOutputAdj] → [2nd Transfer]. *2.* Select the side of the image (Front or Back), on which the transfer failure occurs. **NOTE** • **For envelopes, only first side can be selected.** *3.* Select the paper type with the transfer failure. *4.* Enter the new setting from the ▲ and ▼ keys. *5.* Select the Menu/Select key to validate the adjustment value. *6.* Check the printed image for any image problem.

15.9.5 Stabilization

A. Initialize+Stabi.

Functions	• To carry out an image stabilization sequence after the historical data of image stabilization control has been initialized.
Use	• Use if an image problem persists even after gradation adjustment has been executed. • Use if tone reproduction and maximum density are faulty even after Stabilizer Mode has been executed. • When color shift correction is needed again after the machine maintenance. • After executing the skew adjustment reset.
Setting/ Procedure	*1.* Select [Service Mode] → [ProcessAdjustment] → [Stabilization]. *2.* Select [Initialize+Stabi.]. *3.* Press the Menu/Select key to start stabilizer. The LED line key turns off during the Stabilizer sequence. *4.* Stabilizer is completed when the LED line turns blue.

B. StabilizationOnly

Functions	• The image stabilization sequence is carried out without clearing the historical data of image stabilization control.
Use	• Use if an image problem persists even after gradation adjustment has been executed. • When [Dmax Density] and [Background Margin] of Service Mode are changed.
Setting/ Procedure	*1.* Select [Service Mode] → [ProcessAdjustment] → [Stabilization]. *2.* Select [StabilizationOnly]. *3.* Press the Menu/Select key to start Stabilizer. The LED line key turns off during the Stabilizer sequence. *4.* Stabilizer is completed when the LED line turns blue.

15.9.6 Density Adjustment

A. Thick Paper Density Adjustment

Functions	• To fine-adjust density of printed images of each color for thick paper and OHP transparencies. (Only black color adjustable for OHP transparencies)
Use	• To change the density of the printed image for each color with thick paper and OHP transparencies.
Adjustment Range	• The default setting is 0. -5 to +5 (step: 1)
Adjustment Instructions	Light color: Press the ▲ key. Dark color: Press the ▼ key.
Setting/ Procedure	*1.* Select [Service Mode] → [ProcessAdjustment] → [DensityAdjustment]. *2.* Press the ▼ or ▲ key for the desired color to correct the image density.

B. Black Image Density

Functions	• To fine-adjust the density of the printed image for a black print.
Use	• To vary the density of the printed image of a black print.
Adjustment Range	• The default setting is 0. -2 to +2 (step: 1)
Adjustment Instructions	If the black is light, press the ▲ key. If the black is dark, press the ▼ key.
Setting/ Procedure	*1.* Select [Service Mode] → [ProcessAdjustment] → [DensityAdjustment] → [BlackImageDensity]. *2.* Press the ▼ or ▲ key as necessary to correct the image density.

15.9.7 Replenish Toner

Functions	• To adjust the set T/C level by replenishing an auxiliary supply of toner when a low ID occurs due to a lowered T/C after large numbers of prints have been made of originals having a high image density.
Use	• When there is a drop in T/C.
Setting/ Procedure	*1.* Select [Service Mode] → [Replenish Toner]. *2.* Select the color, for which supply of toner is to be replenished. *3.* Pressing the Menu/Select key will let the machine detect the current toner density and; if the density is lower than a reference value, a toner replenishing sequence and then a developer agitation sequence are run. *4.* These sequences are repeated up to a maximum of four times until the toner density reaches the reference value. If the toner density is found to be higher than the reference value, only a developer agitation sequence is carried out.

15.9.8 Bias Choice

Functions	• To change the setting of the developing bias voltage. • When this function is turned ON, it decreases the developing bias voltage, thereby preventing voltage leak from occurring.
Use	• Use when patches of white occur in the image in an ambience of low atmospheric pressure, such as in high altitudes.
Setting/ Procedure	• The default setting is OFF. ON “OFF”

15.10 Finisher

15.10.1 CB-FN Adjust

A. Center Staple Pos

See P.33 of the SD-505 service manual.

B. Half-Fold Pos.

See P.30 of the SD-505 service manual.

C. Punch Reg. Loop

See P.66 of the FS-519/PK-515/OT-602 service manual.

D. Punch Stop Position

See P.66 of the FS-519/PK-515/OT-602 service manual.

⚠1 15.10.2 FN-X3 Adjust

A. Center Staple Pos

See P.37 of the FS-609/PK-501 service manual.

B. Half-Fold Pos.

See P.39 of the FS-609/PK-501 service manual.

15.10.3 Punch option setting

See P.69 of the FS-519/PK-515/OT-602 service manual.
See P.41 of the FS-609/PK-501 service manual.

15.11 Internet ISW

- By using this setting, the firmware stored in the server can be downloaded over internet for upgrading.
- For details for upgrading the firmware, refer to “Firmware upgrade” in the Maintenance section.
See P.59

15.11.1 Internet ISW Set

Functions	• To set whether or not to enable each setting for Internet ISW.
Use	• To use when upgrading the firmware by Internet ISW. • Each setting such as Server setting will be valid by setting this to “Enable”. **NOTE** • **When the following setting is set to “ON”, this setting will automatically be set to “Disable” and cannot be changed.** **[Admin. Settings] → [Security Settings] → [EnhancedSecurity]**
Setting/ Procedure	• The default setting is Disable. Enable “Disable”

15.11.2 HTTP Settings

- It will be displayed only when [Internet ISW Set] is set to “Enable”.

A. Data Retrieval Set

Functions	• To set whether or not to enable downloading using the HTTP protocol.
Use	• To use when accessing the server using the HTTP protocol. • Setting on the proxy server will be valid when this setting is “Enable”.
Setting/ Procedure	• The default setting is Disable. Enable “Disable”

B. Proxy Connection

Functions	• To set whether or not to connect via proxy server when accessing the server.
Use	• To use when accessing the server via proxy server.
Setting/ Procedure	• The default setting is OFF. ON “OFF”

C. Proxy Server

Functions	• To set the address and the port number for the proxy server.
Use	• To use when accessing the server via proxy server.
Setting/ Procedure	<Server Address> • Enter an address using IPv4, IPv6, or FQDN format. <Port Number> • Enter the value between 1 and 65535 using the ▲ and ▼ keys. (The default setting is 00080)

D. Proxy Auth.

Functions	• To set the login name or password when authentication is necessary for accessing the proxy server.
Use	• To use when authentication is necessary for accessing the proxy server.
Setting/ Procedure	<Auth. Settings> • The default setting is OFF. ON "OFF" <Auth. Login Name> • Enter the login name (up to 32 one-byte characters) using the ▲ and ▼ keys. <Auth. Password> • Enter the password (up to 32 one-byte characters) using the ▲ and ▼ keys.

E. Connection Timeout

Functions	• To set the time for the timeout for accessing the server.
Use	• To use when changing the time for the timeout for accessing the server.
Setting/ Procedure	• The default setting is 060 sec. 030 to 300 sec

15.11.3 FTP Settings

• It will be displayed only when [Internet ISW Set] is set to "Enable".

A. Data Retrieval Set

Functions	• To set whether or not to enable downloading using FTP protocol.
Use	• To use when accessing the server with FTP protocol. • Setting this to "Enable" will enable the proxy server setting.
Setting/ Procedure	• The default setting is Enable. "Enable" Disable

B. Proxy Connection

Functions	• To set whether or not to access the server via proxy server.
Use	• To use when accessing the server via proxy server.
Setting/ Procedure	• The default setting is OFF. ON "OFF"

C. Proxy Server

Functions	• To set the address and the port No. of the proxy server.
Use	• To use when accessing the server via proxy server.
Setting/ Procedure	<Server Address> • Enter an address using IPv4, IPv6, or FQDN format. <Port Number> • Enter the value between 1 and 65535 using the ▲ and ▼ keys.

D. Connection Setting

Functions	• To set the port No. and the time for timeout when accessing the FTP server, and also to set whether or not to enable PASV mode.
Use	• To use when accessing the FTP server. • To use when connecting by the PASV (passive) mode (FTP server side will inform the connection port before connecting).
Setting/ Procedure	<Port Number> • Enter the value between 1 and 65535 using the ▲ and ▼ keys. <Timeout> • Enter the value between 1 and 60 Min. using the ▲ and ▼ keys. <PASV Mode> • The default setting is Disable. Enable “Disable”

15.11.4 Forward Access Set

A. User ID

Functions	• To register the user ID for accessing the program server where firmware is to be stored.
Use	
Setting/ Procedure	• Enter the user ID (up to 64 one-byte characters) using the ▲ and ▼ keys.

B. Password

Functions	• To register the password for accessing the program server where firmware is to be stored.
Use	
Setting/ Procedure	• Enter the password (up to 64 characters) using the ▲ and ▼ keys.

C. URL

Functions	• To register the address and directory of the program server where the firmware is to be stored in URL.
Use	
Setting/ Procedure	• Enter the URL (up to 256 one-byte characters) using the ▲ and ▼ keys. **NOTE** • **Enter the URL which format suits the protocol to be used.** **When connecting to http http:// (Host name or IP address)/ directory name or https:// (Host name or IP address)/directory name.** **When connecting to ftp ftp:// (Host name or IP address) / directory name.**

D. File Name

Functions	• To register the file name of the firmware data to be downloaded.
Use	
Setting/ Procedure	• Enter the file name (up to 63 one-byte characters) using the ▲ and ▼ keys.

15.11.5 Download

Functions	• Access the program server according to the Internet ISW setting, and download the firmware.
Use	• To use when updating the firmware via network.
Setting/ Procedure	*1.* Select [Download]. *2.* Select [Start] to start downloading the firmware. *3.* The message to show the status will be displayed on the screen while connecting and transferring data. **NOTE** • **When it failed to connect to the program server, or failed to download, the error code and the message will be displayed. Check the cause of the error by the error code, and follow the message for resetting. Refer to "Error cord list" for the error codes.** See P.85 *4.* When the firmware is normally upgraded, the main body will automatically be restarted to complete the Internet ISW.

15.12 Settings in the Enhanced Security

15.12.1 Admin. Password

Functions	• To set and change the administrator password.
Use	• Use to change the administrator password. • Use this function when the administrator forget the administrator password because a new password can be set without entering the current administrator password with this.
Setting/ Procedure	• Enter the administrator password (8 digits) using the ▲ and ▼ keys. • The initial setting is “12345678.” New Password : Enter the new administrator password. Reenter Password : Enter the new administrator password again. **NOTE** • **When the following setting leads to the Password Rules [ON], the password with the same letters, the password which is same as the previous one and the password of less than eight digits cannot be changed.** **[Admin. Settings] → [Security Settings]**

15.12.2 Service Password

Functions	• To set and change the service password.
Use	• Use to change the service password.
Setting/ Procedure	• Enter the service password (8 digits) using the ▲ and ▼ keys. • The initial setting is “92729272.” Current Password : Enter the currently using service password. New Password : Enter the new service password. Reenter Password : Enter the new service password again. **NOTE** • **When the following setting leads to the Password Rules [ON], the password with the same letters as well as the password which is same as the previous one cannot be changed.** **[Admin. Settings] → [Security Settings]** • **NEVER forget the service password. When forgetting the service password, call responsible person of KMBT.**

15.12.3 Data Backup

Functions	• To backup NVRAM data in the main body to the flash memory.
Use	• To backup current data in order to prevent data in NVRAM from being erased unexpectedly. • To backup data manually. It usually makes backup every hour automatically. • Backup data can be restored by following the specified procedure when the trouble (CD3XX) occurred. Refer to “Troubleshooting” for details on restoration procedure. See P.460
Setting/ Procedure	*1.* Select [Data Backup] → [Start] *2.* Press the Menu/Select to start making a backup. *3.* Check the message [Completed. Please turn power OFF and ON.], and turn power switch OFF. Wait for ten seconds or more and turn power switch back ON.

15.12.4 Admin. Auth Lock REL

Functions	• To release an access lock that is activated after an administrator password authentication.
Use	• To release the access lock with service authority when an administrator password authentication fails and the access lock is activated. • When the power switch is turned OFF and ON or the period of time set in the Release Time Settings elapses, the machine releases the access lock that is activated after the administrator password authentication. In addition to these operations, this setting provides another way to release the access lock.
Setting/ Procedure	*1.* Select [Admin.AuthLockREL] → [Start]. *2.* Press the Menu/Select to release an access lock. *3.* When [OK] is displayed, press the Menu/Select key.

15.12.5 Release time

Functions	• To set the time that elapses before the machine releases an access lock that is activated after the CE password authentication.
Use	• To set the period of time that elapses before the machine releases the access lock, which aims to prevent the unintentional release of the access lock. • If the machine is set into an access lock state as a result of CE Authentication, turn power ON with the Menu/Select key held down; then, on the Trouble Reset screen, press ▲ → ▶ → ▼ → ◀ → ▼ → ▶ → ▲. This starts the access lock release timer (set by the release time function). The access lock state is thereafter released when the period of time set in this function elapses. **NOTE** • **If the access lock state is released through the above procedure, do not turn power OFF until the time elapses as set through [Service Mode] → [Security Settings] → [Release time]. If the power is turned OFF before the timer set for release time expires, the lock release operation becomes invalid.**
Setting/ Procedure	• The default setting is 05 Min. 1 to 60 Min. **NOTE** • **When Enhanced Security is set to ON in [Admin. Settings] → [Security Settings] → [EnhancedSecurity], the period of time that can be set in this setting is 5 minutes or more.**

15.13 CS Remote Care

15.13.1 Outlines

- CS Remote Care enables the machine and the computer at CS Remote Care center to exchange data through telephone line in order to control the machine.
- CS Remote Care enables the machine to call the computer at the center when trouble occurs. It also enables the computer at the center to contact the machine for the necessary data.
- Data which CS Remote Care handles can be divided into the following groups.
  a. Data which show the status of use of the machine such as total count, PM count.
  b. Data which show the abnormal situation on the machine such as where and how often errors occur.
  c. Data on adjustment
  d. Data on setting

NOTE

- **It cannot be set when the following setting is set to "ON".**
  [Admin. Settings] → [Security Settings] → [EnhancedSecurity]

15.13.2 Setting up the CS Remote Care

NOTE

- **For resetting up the machine which CS Remote Care has already been set up, clear the RAM for CS Remote Care before resetting.**
  See P.285
- **When using a telephone line modem for connection, use the data modem which is based on the ITU-T recommendations V.34/V.32 bis/V.32 and AT command.**

Step	Procedure	
	Using the telephone line modem	Using E-mail
0	Register the device ID to the application at CS Remote Care center. The initial connection is not available unless the device ID is registered.	
1	Connecting the modem Turn the power for the modem OFF. Connect the machine and the modem with a modem cable. Connect the modem and the wall jack with a modular cable. * For connecting the modular cable, see the manual for the modem.	Be sure to remove the telephone line modem when e-mail is used.
2	Clearing the RAM *1.* Select [Service Mode] → [CS Remove Care] → [Detail Settings]. *2.* Select [RAM Clear]. *3.* Select [Start], and press the Menu/Select key. See P.285	
3	Selecting the CS Remote Care function Select [Service Mode] → [CS Remote Care] → [System Settings], and select [Modem].	Selecting the CS Remote Care function Select [Service Mode] → [CS Remote Care] → [System Settings], and select [E-mail 1] or [E-mail 2].
4	Inputting the ID Code *1.* Select [Service Mode] → [CS Remote Care] → [ID Code]. *2.* Input the seven digits ID of the service person, and press the Menu/Select key. See P.283	

<table>
<tr><th rowspan="2">Step</th><th colspan="2">Procedure</th></tr>
<tr><th>Using the telephone line modem</th><th>Using E-mail</th></tr>
<tr><td>5</td><td colspan="2">Setting the date and time for CS Remote Care
1. Select [Service Mode] → [CS Remote Care] → [Detail Settings].
2. Select [Date/TimeSettings].
3. Input the date, time and the time zone using the ▲ and ▼ keys, and press the Menu/Select key.
See P.284</td></tr>
<tr><td>6</td><td colspan="2">Setting the Center ID
1. Select [Service Mode] → [CS Remote Care] → [Detail Settings].
2. Select [Basic Settings] → [Center ID], and input the Center ID (five digits).
See P.284</td></tr>
<tr><td>7</td><td colspan="2">Setting the Device ID
1. Select [Service Mode] → [CS Remote Care] → [Detail Settings].
2. Select [Basic Settings] → [Device ID], and input Device ID (nine digits).
See P.284</td></tr>
<tr><td>8</td><td>Proceed to step 9.</td><td>Encryption setting
1. Select [Service Mode] → [CS Remote Care] → [Detail Settings].
2. Select [Basic Settings] → [Encryption] and select either ON or OFF.

Retransmission interval on e-mail delivery error
• When selecting [E-mail 2], set the retransmission interval on e-mail delivery error in software SW setting.
See P.277</td></tr>
<tr><td>9</td><td>Setting the telephone number of the Center
1. Select [Service Mode] → [CS Remote Care] → [Detail Settings].
2. Select [Basic Settings] → [Center Tel Number].
3. Input the telephone number of the center using 0 to 9 and [P], [T], [W], [,].
See P.284</td><td>Setting the Respond Timeout
1. Select [Service Mode] → [CS Remote Care] → [Detail Settings].
2. Select [Response Timeout] and enter the response timeout using the ▲ and ▼ keys.
NOTE
• Under normal conditions, there is no need to change the default setting.
See P.284</td></tr>
<tr><td>10</td><td>Inputting the device telephone number
1. Select [Service Mode] → [CS Remote Care] → [Detail Settings].
2. Select [Basic Settings] → [Device Tel Number].
3. Input the Device telephone number using 0 to 9 and [P], [T], [W], [,].
See P.284</td><td>Proceed to step 11.</td></tr>
</table>

Step	Procedure	
	Using the telephone line modem	Using E-mail
11	Inputting the AT command for initializing the modem *1.* Select [Service Mode] → [CS Remote Care] → [Detail Settings]. *2.* Select [AT command]. *3.* Input AT command. **NOTE** • **Change this command only when it is necessary. (They do not need to be changed in normal condition.)** • **For details on AT command, see the manual for the modem.** See P.286	Setting the E-mail address *1.* Select [Service Mode] → [CS Remote Care] → [Server Settings]. *2.* Select [RX Server], and set POP3 server address, POP3 login name, POP3 password and POP3 port number. See P.286 *3.* Select [RX Settings], and set the E-Mail address, AutoArrival Check, ConnectionTimeOut and APOP Auth. See P.286 *4.* Select [TX Settings], and set the SMTP server address, SMTP Port Number, ConnectionTimeOut, and Auth. Settings. See P.286 *5.* Select [CommunicationTest], and press Menu/Select key to carry out a transmission/reception test. If it fails to exchange messages, see the error message to take necessary measure, and try again. See P.286
12	Setting the DIPSW for CS Remote Care **NOTE** • **This setting is not normally necessary. Take this step only when necessary in a specific connecting condition.**	Proceed to step 13.
13	Executing the initial transmission *1.* Select [Service Mode] → [CS Remote Care] → [Detail Settings]. *2.* Select [Basic Settings] → [Initial TX] → [Start]. *3.* Press the Menu/Select key to start initial transmission. *4.* When the machine is properly connected with the center, CS Remote Care setting screen will be displayed. **NOTE** • **The initial TX key at the right bottom of the screen will be displayed only when the center ID, the device ID, Telephone number of the center and the device telephone number have been input.** See P.284	Receiving the initial connection E-mail message Sending the initial connection E-mail message from the center to the address of the printer. **NOTE** • **When receiving the initial connection E-mail message from the center while CS Remote Care-related screen is being displayed, the current setting information will be deleted, and CS Remote Care setting will be displayed.** • **For sending the initial connection E-mail, see the manual for CS Remote Care center.** • **Messages can be exchanged only between the center with initial connection and the printer.** • **The initial connection from the center will be carried out, and the E-mail address of the center will be stored in the printer.** • **When the initial registration is complete, the E-mail address of the center will be displayed by selecting [Service Mode] → [CS Remote Care] → [Detail Settings], [Basic Settings] → [E-mail].**

15.13.3 Software SW setting for CS Remote Care

NOTE

- **SW bits data are written into the NVRAM every time a change is made. In case you changed bit data by accident, be sure to restore the previous state.**

A. Input procedure

1. Select [Service Mode] → [CS Remote Care] → [Detail Settings] → [SoftwareSWSetting].
2. Input the switch number (two digits).
3. Select [Set by Bit], and select switch bit number using the arrow keys, and input 0 or 1. (For setting by hexadecimal numbers, select [Set by Hex], and input.)
4. Press the Menu/Select key.

NOTE

- **About functions of each switch, see to "B. List of software SW for CS Remote Care."**

B. List of software SW for CS Remote Care

NOTE

- **Do not change any bit not described on this table.**

SW No.	Bit	Functions	0	1	Default
SW 01	0	Dial mode	Pulse	Tone	1
	1	Reservation	—	—	0
	2	Reservation	—	—	0
	3	Reservation	—	—	0
	4	Baud rate	*1	*1	0
	5		*1	*1	0
	6		*1	*1	0
	7		*1	*1	1
SW 02	0	Emergency transmission	Do not call	Call	1
	1	Auto call on date specification	Do not call	Call	1
	2	Reservation	—	—	0
	3	Reservation	—	—	0
	4	Reservation	—	—	0
	5	Auto call on the IC Life	Do not call	Call	1
	6	Auto call on CCD clamp/gain adjustment failure	Do not call	Call	1
	7	Reservation	—	—	0
SW 03	0	Reservation	—	—	0
	1	Auto call on the toner empty	Do not call	Call	1
	2	Reservation	—	—	0
	3	Auto call on the waste toner bottle full	Do not call	Call	1
	4 to 7	Reservation	—	—	0
SW 04	0 to 7	Reservation	—	—	0

SW No.	Bit	Functions	0	1	Default
SW 05	0	Modem redial interval	*2	*2	1
	1		*2	*2	1
	2		*2	*2	0
	3		*2	*2	0
	4 to 7	Reservation	—	—	0
SW 06	0	Modem redial times	*3	*3	0
	1		*3	*3	1
	2		*3	*3	0
	3		*3	*3	1
	4		*3	*3	0
	5		*3	*3	0
	6		*3	*3	0
	7	Reservation	—	—	0
SW 07	0	Redial for response time out	Do not redial	Redial	1
	1 to 7	Reserved	—	—	0
SW 08	0	Retransmission interval on e-mail delivery error	*4	*4	0
	1		*4	*4	1
	2		*4	*4	1
	3		*4	*4	0
	4 to 7	Reservation	—	—	0
SW 09	0	Retransmission times on e-mail delivery error	*5	*5	0
	1		*5	*5	1
	2		*5	*5	0
	3		*5	*5	1
	4		*5	*5	0
	5		*5	*5	0
	6		*5	*5	0
	7	Reservation	—	—	0
SW 10	0 to 7	Reservation	—	—	0
SW 11	0	Timer 1 RING reception → CONNECT reception	*6	*6	0
	1		*6	*6	0
	2		*6	*6	0
	3		*6	*6	0
	4		*6	*6	0
	5		*6	*6	1
	6		*6	*6	0
	7		*6	*6	0

SW No.	Bit	Functions	0	1	Default
SW 12	0	Timer 2 Dial request completed → CONNECT reception	*7	*7	0
	1		*7	*7	0
	2		*7	*7	0
	3		*7	*7	0
	4		*7	*7	0
	5		*7	*7	0
	6		*7	*7	1
	7		*7	*7	0
SW 13	0 to 7	Reservation	—	—	0
SW 14	0	Timer 4 Line connection → Start request telegram delivery	*8	*8	0
	1		*8	*8	0
	2		*8	*8	0
	3		*8	*8	0
	4		*8	*8	0
	5		*8	*8	1
	6		*8	*8	0
	7		*8	*8	0
SW 15	0	Timer 5 Wait time for other side's response	*9	*9	0
	1		*9	*9	1
	2		*9	*9	1
	3		*9	*9	1
	4		*9	*9	1
	5		*9	*9	0
	6		*9	*9	0
	7		*9	*9	0
SW 16	0 to 7	Reservation	—	—	0
SW 17	0 to 7	Reservation	—	—	0
SW 18	0	Attention display To set weather to give the alarm display when using the modem but the power for the modem is OFF.	Do not call	Call	1
	1 to 7	Reservation	—	—	0
SW 19 to SW 40	0 to 7	Reservation	—	—	0

*1: Baud rate

Mode	01-7	01-6	01-5	01-4
9600 bps	0	1	1	0
19200 bps	0	1	1	1
“38400 bps”	1	0	0	0

*2: Modem redial interval

Mode	05-3	05-2	05-1	05-0
1 minute	0	0	0	1
2 minutes	0	0	1	0
“3 minutes”	0	0	1	1
4 minutes	0	1	0	0
5 minutes	0	1	0	1
6 minutes	0	1	1	0
7 minutes	0	1	1	1
8 minutes	1	0	0	0
9 minutes	1	0	0	1
10 minutes	1	0	1	0

*3: Modem redial times

Mode	06-6	06-5	06-4	06-3	06-2	06-1	06-0
0 to 9 times	000 0000 to 000 1001						
“10 times”	0	0	0	1	0	1	0
11 to 99 times	000 1011 to 110 0011						

*4: Retransmission interval on e-mail delivery error

Mode	08-3	08-2	08-1	08-0
0 minute	0	0	0	0
10 minutes	0	0	0	1
20 minutes	0	0	1	0
30 minutes	0	0	1	1
40 minutes	0	1	0	0
50 minutes	0	1	0	1
“60 minutes”	0	1	1	0
70 minutes	0	1	1	1
80 minutes	1	0	0	0
90 minutes	1	0	0	1
100 minutes	1	0	1	0
110 minutes	1	0	1	1
120 minutes	1	1	0	0

*5: Retransmission times on e-mail delivery error

Mode	09-6	09-5	09-4	09-3	09-2	09-1	09-0
0 to 9 times	000 0000 to 000 1001						
“10 times”	0	0	0	1	0	1	0
11 to 99 times	000 1011 to 110 0011						

*6: Timer 1 (RING reception → CONNECT reception)

Mode	11-7	11-6	11-5	11-4	11-3	11-2	11-1	11-0
0 to 31 sec	0000 0000 to 0001 1111							
“32 sec”	0	0	1	0	0	0	0	0
33 to 255 sec	0010 0001 to 1111 1111							

*7: Timer 2 (Dial request completed → CONNECT reception)

Mode	12-7	12-6	12-5	12-4	12-3	12-2	12-1	12-0
0 to 63 sec	0000 0000 to 0011 1111							
“64 sec”	0	1	0	0	0	0	0	0
65 to 255 sec	0100 0001 to 1111 1111							

*8: Timer 4 (Line connection → Start request telegram delivery)

Mode	14-7	14-6	14-5	14-4	14-3	14-2	14-1	14-0
0 to 31 (x 100 msec)	0000 0000 to 0001 1111							
“32 (x 100 msec)”	0	0	1	0	0	0	0	0
33 to 255 (x 100 msec)	0010 0001 to 1111 1111							

*9: Timer 5 (Wait time for other side’s response)

Mode	15-7	15-6	15-5	15-4	15-3	15-2	15-1	15-0
0 to 29 sec	0000 0000 to 0001 1101							
“30 sec”	0	0	0	1	1	1	1	0
31 to 255 sec	0001 1111 to 1111 1111							

15.13.4 Setup confirmation

- **Follow the steps below to make sure that CS Remote Care has been properly set up.**

1. Call the Service Mode to the screen.
2. Select [CS Remote Care].
3. Check to make sure that only selected item is displayed.

15.13.5 Calling the maintenance

- When CE starts maintenance, inputting the ID code of CE (seven digits: numbers which CE can identify. They are controlled by the distributor.) will transmit the information to the Center side and tells that the maintenance has started. When the maintenance is finished, select [Maintenance Done] → [Start], press the Menu/Select key will transmit the information to the center and tells that it is finished.

A. When starting the maintenance

1. Select [Service Mode] → [CS Remote Care].
2. Select [ID Code], and input ID Code.
3. Press the Menu/Select key.

* The Start key blinks while maintenance is being carried out.

B. When finishing the maintenance

1. Select [Service Mode] → [CS Remote Care].
2. Select [Maintenance Done] → [Start], and press the Menu/Select key.

15.13.6 Calling the center from the administrator

- When the CS Remote Care setup is complete, the administrator can call the CS Remote Care center.

1. Select [System Settings] → [System Connection].
2. Select [CallRemoteCenter].
3. Press the Menu/Select key.
   When the setup is not complete or another transmission is being carried out, the CallRemoteCenter key will not be displayed, and the transmission is not available.

NOTE

- **For transmitting data of the machine by calling the center on the specified date and time, refer to the manual for CS Remote Care center.**

15.13.7 Checking the transmission log

- The transmission log list will be output to be checked.

1. Select [Service Mode] → [CS Remote Care] → [Detail Settings] → [Print Comm.Log].
2. Select 1-Sided Print or 2-Sided Print.
3. Load tray 1 or bypass tray with A4S paper.
4. Press the Menu/Select key to output transmission log.

15.13.8 Detail on settings

A. System Settings

Functions	• To select the system type for remote diagnosis.
Use	• Use to newly build or change the system.
Setting/ Procedure	• Select E-Mail, Modem. E-mail 1 E-mail 2 Modem

B. ID Code

Functions	• To register the service ID.
Use	• Use when registering and changing service ID.
Setting/ Procedure	• Enter a 7-digit code. (0000001 to 9999999) <Registration> • Enter the service ID. • Press the Menu/Select key to register the ID. • The [Detail Settings] will appear when the ID has been registered.

C. Detail Settings

(1) Basic Settings

Functions	• Execute the primary setting.
Use	• Use to change the set contents. • Use to register the machine to the CS Remote Care center.
Setting/ Procedure	*1.* Select [Service Mode] → [CS Remote Care]. *2.* Selecting the [Detail Settings] will display the primary setting. <Center Setting> • Set the center ID, Device ID, and the phone No. • When e-mail is selected for system and all setup procedures are completed, e-mail address of the center is displayed. * When entering the phone number, keys on the screen have following meanings. [,] Pose : Waits to start transmitting after dialing [W] Wait : Detects the dial tone of the other end [T] Tone dial : Carry out tone dialing [P] Pulse dial : Carry out pulse dialing [*], [#] : To be used as necessary <Schedule (Only when the [E-mail 2] is selected)> • Set the schedule of notification to the center. • Up to three different notification schedules can be registered. • Select the notification cycle from [Interval ofDay(s)], [Day of the Week], or [Date of the Month]. When selecting [Interval ofDay(s)] for the notification cycle, set the Day Frequency. When selecting [Day of the Week] for the notification cycle, set the Week Frequency and day of the week. When selecting [Date of the Month], set the Month Frequency and the date of the month. <Notification Item (Only when the [E-mail 2] is selected)> • Select the items of data that will be sent to the center in one-way transmission through E-mail 2. • The following table shows each of the notification item keys and corresponding data.

[1]	Sales count data	[7]	EKC data
[2]	Error count data	[8]	Adjustment data
[3]	Service count data	[9]	Coverage data
[4]	Life count data Life cycle data	[10]	Not used
[5]	CSRC-System data Device config data	[11]	Not used
[6]	History data	[12]	Not used

NOTE

- **Multiple items of data can be selected and sent at one time. However, be sure that only EKC data cannot be sent together with other items of data.**

Initial TX

- Select the Initial TX will sent the information to the CS Remote Care center to register the machine.
  (Only when the modem is selected on the system Input.)

(2) Date/Time Settings

Functions	• To set the data and time-of-day.
Use	• Use to set or change the date and time-of-day.
Setting/ Procedure	*1.* Select [Service Mode] → [CS Remote Care]. *2.* Select [Detail Settings] to access Date/TimeSettings. *3.* Enter the date (month, day and year), time-of-day, and the time zone. *4.* Press the Menu/Select key to start the clock.

(3) RAM Clear

Functions	• To clear the following data at the center ID Code, Basic Settings, Date/TimeSettings (Time Zone), SoftwareSWSetting and AT command.
Use	• To be used for setting CS Remote Care. • To be used for reset the every data of the center to default. **NOTE** • **If RAM clear is selected during transmission, RAM clear processing will be implemented at the time the transmission is completed regardless of whether it is done properly or not.**
Setting/ Procedure	• The default setting is “Cancel.” Start “Cancel”

(4) Print Comm. Log

Functions	• To print out the communication log.
Use	• Use to output and use the communication log.
Setting/ Procedure	*1.* Select [Service Mode] → [CS Remote Care]. *2.* Select [Detail Settings] to access Print Comm.Log. *3.* Load tray 1 or bypass tray with A4S or $8^1/_2$ x 11 paper. *4.* Press the Menu/Select key to print out the communication log.

(5) Software SW Setting

Functions	• To change the CS Remote Care settings.
Use	• To change the settings for CS Remote Care as necessary.
Setting/ Procedure	• Refer to “Software SW setting for CS Remote Care” for the setting. See P.277

(6) Response Timeout

Functions	• It sets the intervals for resending e-mails when transmission error occurred. • It can be set only when [E-mail] is selected by System Settings.
Use	• To use when changing the intervals for resending e-mails when transmission error occurred.
Setting/ Procedure	• The default setting is 0060 Min. “0060 Min.” (0010 to 1440)

(7) AT command

Functions	• To set the command to be issued at the time of modem initialization. • This setting is available only when [Modem] is selected for the system setting.
Use	• To set the command to be issued at the time of modem initialization.
Setting/ Procedure	• Enter the command and press the Menu/Select key to register.

D. Server Settings

• Server Settings can be set only when [E-mail] is selected by System Settings.

(1) RX Server

<POP3 server>

Functions	• To set the POP3 server address used for the CS Remote Care.
Use	• To set the address of the POP3 Server. • POP3 server address can be set with IP address or the domain name.
Setting/ Procedure	<Enter IP address> • IP address version 4 format [0 to 255].[0 to 255].[0 to 255].[0 to 255] <Enter FQDN> • Enter the domain name.

<POP3 Login Name>

Functions	• To set the logon name for the POP3 server used for the CS Remote Care.
Use	• To set the logon name for the POP3 server.
Setting/ Procedure	• The default setting is No. • Up to 64 characters (alphanumeric characters and symbols) can be used.

<POP3 Password>

Functions	• To set the logon password for the POP3 server used for the CS Remote Care.
Use	• To set the logon password for the POP3 server.
Setting/ Procedure	• The default setting is No. • Up to 15 characters (alphanumeric characters and symbols) can be used.

<POP3 Port Number>

Functions	• To set the POP3 port number used for the CS Remote Care.
Use	• To set the port number for the POP3 server.
Setting/ Procedure	• The default setting is 00110. "00110" (1 to 65535)

(2) RX Settings

<E-mail Setting>

Functions	• To set the e-mail address used for the CS Remote Care.
Use	• To set the e-mail address.
Setting/ Procedure	• The default setting is No. • Up to 129 characters (alphanumeric characters and symbols) can be used.

<Auto Arrival Check>

Functions	• To set whether or not to use mail check and the time interval for the POP server used for the CS Remote Care.
Use	• To set whether or not to use mail check and the time interval for the POP server used for the CS Remote Care. • To change the time interval for mail check.
Setting/ Procedure	<Check Setting.> • The default setting is OFF. ON “OFF” <Check Interval.> • The default setting is 010 Min. 010 Min. (1 to120)

<Connection Timeout>

Functions	• To set the timeout period for connection during reception.
Use	• To change the timeout period for connection during reception.
Setting/ Procedure	• The default setting is 060 Sec. “060 Sec” (030 to 300 Sec)

<APOP Auth.>

Functions	• To set whether or not to authenticate the APOP during reception.
Use	• To authenticate the APOP during reception.
Setting/ Procedure	• The default setting is OFF. ON “OFF”

(3) TX Settings

<SMTP server>

Functions	• To set the SMTP sever address for transmission used for the CS Remote Care.
Use	• To set the SMTP server address. • SMTP server address can be set by the IP address or the domain name.
Setting/ Procedure	<Enter IP address> • IP address version 4 format [0 to 255].[0 to 255].[0 to 255].[0 to 255] <Enter FQDN> • Enter the domain name.

<SMTP Port Number>

Functions	• To set the SMTP port number for transmission used for the CS Remote Care.
Use	• To set the Port Number of the SMTP Server.
Setting/ Procedure	• The default setting is 00025. "00025" (00001 to 65535)

<Connection Timeout>

Functions	• To set the timeout period for transmission.
Use	• To change the timeout period for connection during transmission.
Setting/ Procedure	• The default setting is 060 sec. "060 sec" (030 to 300 Sec)

<Auth. Method>

Functions	• To set whether or not to authenticate during transmission via SMTP server.
Use	• To use when authenticating during transmission. Available authentication mode: POP before SMTP, SMTP Auth.
Setting/ Procedure	• The default setting is OFF. "OFF" POP before SMTP SMTP Auth. * Setting to "POP before SMTP" will set the time for POP before SMTP. • The default setting is 60 sec. "60 sec" (00 to 60 sec) * When setting to SMTP authentication, Select the "Setting Check" key for authentication. User ID : Enter the user ID for SMTP authentication. Password : Enter the password for SMTP authentication. Domain Name : Enter the domain name for SMTP authentication.

(4) Communication Test

Functions	• To determine the correct transmission and reception using CS Remote Care.
Use	• Use to determine the correct transmission and reception using CS Remote Care.
Setting/ Procedure	• Select [Start] and press the Menu/Select key to let the machine start the transmission and reception test. • The test procedure and result will be displayed on the screen.

(5) Data Initialized

Functions	• To initialize the contents for the sever setting.
Use	• Use to initialize the contents for the server setting.
Setting/ Procedure	• The default setting is OFF. ON "OFF"

15.13.9 List of the CS Remote Care error code

A. When connecting by modem

Error code	Error	Solution
0001	The line is busy (Busy detection)	• Transmit again manually.
0002	Failure of the Modem default setting at transmitting (When the transmission completes with modem initial setting failed)	• Check if the power of the modem is ON. • Check the connecting condition between the modem and the main body.
0003	Timeout of CONNECT at transmitting (No response to ATD)	• Transmit again manually • Check if the power of the modem is ON. • Check the connecting condition between the modem and the main body.
0005	Timeout of CONNECT at receiving (No response to ATA)	• Check if the power of the modem is ON. • Check the connecting condition between the modem and the main body.
0006	Shut down of the data modem line (Host) (Carrier OFF is detected)	• No solution, because the line is shut down at the host side.
0008	Timeout of start request telegram delivery (Start request telegram is not delivered after line connection)	• Transmit again manually.
0009	Timeout of finish request telegram delivery (Finish request telegram is not delivered (Start of shut down).)	• Transmit again manually.
000A	Receiving rejection (Receiving is made when the main body is set to reject receiving.)	• Check the setting condition of the host side. • Check the setting condition of the main body side.
000B	RS232C driver over run (When the modem detects over run.)	• If the same error is detected several times, turn the modem power OFF and ON.
000C	If the same error is detected several times, turn the modem power OFF and ON.	• If the same error is detected several times, turn the modem power OFF and ON.
000D	Break Interrupt (BI) indicator (When the modem detects Break Interrupt (BI) indicator.)	• If the same error is detected several times, turn the modem power OFF and ON.
0011	Baud rate ERROR (When selected baud rate is out of the specification (9600 bps to 38400 bps).)	• Check the baud rate of the software DipSW.
0018	Machine ID has already been registered (Request telegram 2 (SET-UP) comes from the main body that has already registered machine ID.)	• Set the initial registrations again for all including the host side.
0019	Center ID error (Center ID of the host is not identical with the one of start request telegram.)	• Check center ID setting of the main body side. • Check center ID setting of the main body side.

Error code	Error	Solution
001A	Device ID inconsistency (Device ID of the host is not identical with the one of start request telegram.)	• Check device ID setting of the main body side. • Check the setting of the host side.
001B	Device ID unregistered (Request telegram 2 (Constant data transmitting, emergency call) comes from the main body that has not registered machine ID yet.)	• Check device ID setting of the main body side. • Check the setting of the host side.
001E	Impossible to change (during printing) (Setting cannot be changed because the setting change is made during the machine is printing or starts printing.)	• Try again when the machine is not printing.
0020	Timeout of telegram delivery (At waiting mode of telegram delivery the machine fails to receive the telegram in a given time.)	• Try communication again.
0027	Transmission / receiving collision (Receiving is detecting during transmitting processing)	• Try communication again.

NOTE

- **When a code other than the ones listed above is displayed, contact KMBT and inform the error code.**

B. When connecting by e-mails

Error code	Error	Solution
0001	Connection timeout during transmission	• Check the SMTP server on User side.
0###	Transmission error ***: SMTP responding code (hexadecimal)	• Check the SMTP server on User side.
0003	Connection timeout when receiving	• Check the POP3 server on User side.
0005	Receiving error	• Check the POP3 server on User side.
1030	Machine ID mismatching • Received an e-mail which tells that machine ID mismatches.	• Check the machine ID setting. • Check the machine ID setting on host side.
1062	Modifying not available due to the print job currently performing • When informing the host that it cannot be modified due to the print job currently performing.	• Ask the host to send another instruction mail for modifying.
1081	Frame No. error • The last frame has not been received. • There are missing frame No.	• Check the status of the machine registration on host side.
1084	Date expired • Expiration date for data modification command has passed.	• Ask the host to send another instruction mail for modifying.
1092	Received an error mail when center setup is not complete	• Check the status of the machine registration on host side.
2039	Socket is not connected. • LAN cable on the printer side is detached.	• Check the SMTP server and POP3 server on user side.
203E	Network is down. • LAN cable on the printer side is detached.	• Check the connection between the printer on the user's side and the network connector. • Check the network environment on the user's side.
3000	POP3_AUTHORIZATION_ERR	• Check the POP3 server environment on user's side.
3001	POP3_TRANSACTION_ERR	• Check the POP3 server environment on user's side.
3002	POP3_CONNECT_ERR	• Check the POP3 server environment on user's side.
3003	POP3_TIMEOUT_ERR	• Check the POP3 server environment on user's side.
3004	POP3_FORMAT_ERR	• Check the POP3 server environment on user's side.
3005	POP3_MEMORY_ERR	• Check the POP3 server environment on user's side.
3006	POP3_JOBID_ERR	• Check the POP3 server environment on user's side.
3007	POP3_NO_DATA_ERR	• Check the POP3 server environment on user's side.

Error code	Error	Solution
3008	POP3_DELETE_FAIL_ERR	• Check the POP3 server environment on user's side.
3009	POP3_MAILBOX_FULL	• Check the POP3 server environment on user's side.
4103	Not ready • Tried to transmit or receive an e-mail when the machine was not yet in the e-mail receiving status after power was turned ON.	• Wait for a while and try transmitting again.
4104	SMTP channel not ready	• Wait for a while and try transmitting again.
4105	POP3 channel not ready	• Wait for a while and try transmitting again.
4106	Not Ready other than the ones listed above.	• Wait for a while and try transmitting again.

NOTE

- **When a code other than the ones listed above is displayed, contact KMBT and inform the error code.**

15.13.10 Troubleshooting for CS Remote Care

If communication is not done properly, check the condition by following the procedures shown below.

1. Shift the screen in the order of [Service Mode] → [CS Remote Care] → [Detail Settings].
   At this time, in the cases of initial transmitting / administrator transmitting / maintenance start transmitting / maintenance finish transmitting, the communication result will be displayed at the top of the screen.

* For the communication result, the following message will be displayed based on its success or failure.

Display of communication result	Cause	Solution
Communicating	—	—
Communication trouble with the center	Although the machine tries to communicate with the center, there is any trouble and the communication completes unsuccessfully.	• See the list of error message and confirm the corresponding point. See P.337
Complete successfully	—	—
Modem trouble	Although the machine tries to communicate with the center, there is any trouble in the modem.	• Check if the power of modem in ON. • Check if there is any problem in connection between the modem and the main body.
Busy line	Although the machine tries to communicate with the center, the line to the center is busy.	• Communicate with the center again.
No response	Although the machine tries to communicate with the center, there is no response from the center.	• Communicate with the center again. • Check the communication environment of the center side.

16. Jig Software

16.1 Construction of the jig software

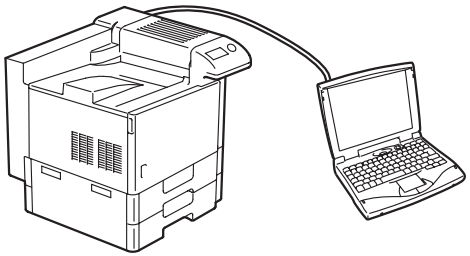

A02EF3C025DA

Name	Description	Remark
Notebook PC	• Starts the external panel controller for adjustment.	Commercially available product
Jig software *1 (External Panel Controller)	• Allows settings, adjustments, and checks to be made for the printer using a PC.	Supplied from KMBT
Network cable (straight cable)	• Connects between the notebook PC and the printer.	Commercially available product

*1: The recommended OS of the operating environment for the external panel control is Windows 98, Windows 2000, or Windows XP. No other OSs are guaranteed for correct operation. Another requirement is that the PC is capable of serial communications at 19,200 bps.

16.1.1 Connecting the equipment cables

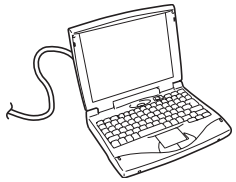

A02EF2C228DA

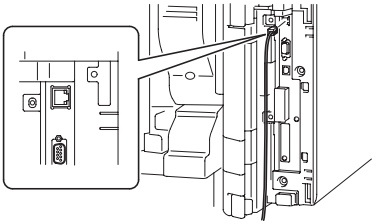

A02EF2C229DA

1. Connect the PC to the printer with a network cable.

NOTE

- **The network cable must be a straight-through cable.**

16.1.2 Starting the PC and the printer

NOTE:

- **The notebook PC should be started up, and the printer should be turned on before the External Panel Controller is started up.**
- **If an error message appears, follow the instructions described in the message.**
- **Do not quit the External Panel Controller while it is being used. If it is quit, restart the machine and the External Panel Controller.**

1. Turn on the machine.
2. Press the Menu/Select key.
3. Press the ▼ key to select “Service Mode.”
4. Press the Menu/Select key.
5. Input the password, and press the Menu/Select key.
6. Check that “System Settings” is selected and press the Menu/Select key.
7. Press the ▼ key to select “SoftwareSWSetting.”
8. Press the Menu/Select key.
9. Select Software-SW “62” and press the Menu/Select key.
10. Press the ▼ key to select “Set by Hex.”
11. Change the setting from “00” to “01” and press the Menu/Select key.
12. Press the Cancel key.
13. Turn off the machine.
14. While the printer remains OFF, turn ON the PC.

15. Check that the computer's IP address and subnet mask are set as follow:
IP address: 192.168.1.100
Subnet mask: 255.255.255.0

16. Turn ON the power switch of the printer and start External Panel Controller on the PC.

NOTE:

- **It may take some time to start External Panel Controller.**

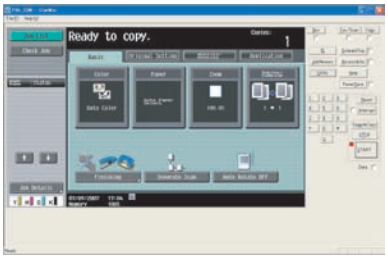

A02EF2C261DA

17. Check that the External Panel Controller appears in the computer screen.

NOTE:

- **If the External Panel Controller does not appear in the computer screen, turn the printer off, then on again, and then restart the External Panel Controller.**

16.1.3 Jig software disconnection procedures

- After the jig software (external panel controller) has been used, the external application mode must be canceled (by setting HEX Assignment of software SW “62” to “00”).
- The following two procedures are available.

A. Disconnection procedure performed from the PC

1. Select [Service Mode] → [System 2] → [Software Switch Setting].
2. Click [Switch No.] and enter “62” with the ten-key pad.
3. Click [HEX Assignment] and enter “00” with the ten-key pad.
4. Click [Fix].
5. Disconnect the network cable and turn OFF and then turn ON the printer.

B. Disconnection procedure performed from the printer

1. Turn OFF the power switch of the printer.
2. Turn ON the power switch with the Menu/Select key held down.
3. Trouble reset screen will appear.
4. Select [Release Ext. APP], and press the Menu/Select key.

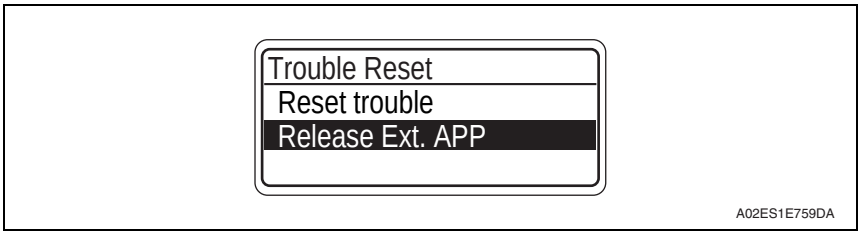

5. Following the instructions given on the screen, turn OFF and then turn ON the printer.
6. This automatically sets HEX Assignment of software SW “62” to “00” and the printer is started.
7. Disconnect the network cable.

16.2 Calling the Service Mode to screen

NOTE

- **Given in the following are only those adjustments that are made using the external panel controller.**
- **Ensure appropriate security for Service Mode setting procedures. They should never be known to any unauthorized person not involved with service jobs.**

1. Click the Utility key.
2. Click [Check Details].
3. Press the following keys in this order:
   Stop → 0 → 0 → Stop → 0 → 1
4. Service mode will be displayed.

16.2.1 Exiting

- Click the [Exit] key.

16.3 Service Mode function tree

*1: Functions to be set and checked only with the jig software
*2: It will be displayed only when the optional finisher (FS-519 or FS-609) is mounted.
*3: It will be displayed only when the [Internet ISW Set] is set to “ON.”

Service Mode			Ref. Page
Machine *4	Fusing Temperature		P.305
	Fusing Transport Speed *5		P.306
	Printer Area	Leading Edge Adjustment *6	P.307
		Centering	P.308
		Leading Edge Adj. (Duplex Side 2) *7	P.309
		Centering (Duplex 2nd Side) *8	P.310
		Paper Feed Direction Adj. *9	P.311
	Printer Resist Loop *10		P.312
	Color Registration Adjustment *11	Cyan	P.313
		Magenta	
		Yellow	
	Exhaust Fan Stop Delay *12		P.314
	LD adjustment *13	LD delay adjust. *14	P.314
		LD lightness balance adjust. *15	P.315
	Manual Bypass Tray Adjustment *16		P.316
	Lead Edge Erase Adjustment *17		P.316
Firmware Version *1			P.316
Imaging Process Adjustment *18	X-Rite Caribration *1		P.317
	D Max Density		P.317
	TCR Level Setting		P.318
	Background Voltage Margin *19		P.318
	Transfer Output Fine Adjustment *20	Primary transfer adj. *21	P.319
		Secondary transfer adj. *22	P.319
	Stabilizer *23	Stabilization Only	P.320
		Initialize+Image Stabilization *24	P.320
	Thick Paper Density Adjustment *25		P.320
	TCR Toner Supply *26		P.321
	Monochrome Density Adjustment *27		P.321
	Dev. Bias Choice *28		P.321
CS Remote Care			P.322
System 1 *29	Marketing Area *30		P.341
	Serial Number *31		P.341
	No Sleep *32		P.341
	Foolscap Size Setting *33		P.342
	Install Date *34		P.342
	Initialization *35	Data Clear	P.342
		System Error Clear	P.342
	Trouble Isolation *36		P.343

Service Mode			Ref. Page
System 1 *29	IU Life Setting *37		P.343
	Change Warm Up Time		P.344
	Machine State LED Setting *38		P.344
System 2 *29	HDD *39		P.345
	Image Controller Setting *40		P.345
	Consumable Life Reminder *1		P.345
	Unit Change *41		P.346
	Software Switch Setting *42		P.346
	LCT Paper Size Setting *43		P.347
	Data Capture		P.348
Counter *44	Life *45		P.351
	Jam		P.352
	Service Call Counter *46		P.352
	Warning		P.352
	Maintenance *47		P.352
	Service Total *1		P.353
	Counter Of Each Mode *48		P.353
	Service Call History (Data) *49		P.353
	Paper Jam History *50		P.353
	Counter Reset *1		—
List Output	Machine Management List *51		P.354
	Adjustments List		P.354
State Confirmation *52	Sensor Check *1		P.355
	Table Number *1		P.367
	Level History1 *1		P.367
	Level History2 *1		P.367
	Temp. & Humidity *1		P.367
	Memory/HDD Adj.	Memory Check *53	P.368
		Compress / Decompression Check *1	P.368
		JPEG check *1	P.369
		Memory Bus Check *1	P.369
		Work Memory In/Out Check *1	P.369
		HDD Version Up *1	P.369
		HDD R/W Check *1	P.370
		HDD Format *54	P.370
	Memory/HDD State *1		P.370
	Color Regist *1		P.371
	IU Lot No. *1		P.371
	Adjustment Data List *1		P.371

Service Mode			Ref. Page
Test Mode	Gradation Pattern *55		P.372
	Halftone Pattern		P.373
	Lattice Pattern *1		P.373
	Solid Pattern *1		P.374
	Color Sample *1		P.374
	8 Color Solid Pattern *1		P.375
	CMM Pattern *1		P.375
	Running Mode		P.375
Finisher *2, *56	CB-FN adjustment *2,*57	Fold&Staple Pos. Adjustment *2, *58	P.376
		Finisher Check *1, *2	
		Punch Regist Loop Size *2, *59	
		Punch Horizontal Position *2, *60	
	FN-X3 Adjustment *2, *61	Center-Staple Position Adj. *2, *62	
		Half-Fold Position Adj. *2, *63	
	Punch Option setting *64		
Internet ISW	Internet ISW Set		P.377
	HTTP Setting *3		P.377
	FTP Setting *3		P.378
	Forwarding Access Setting *3, *65		P.379
	Download *3		P.380

⚠1

✻ The function tree is shown to comply with the format displayed on the screen.

The functions marked with *4 to 62 have names or hierarchical levels different from those on the control panel. The following table shows the names or hierarchical levels on the control panel.

*4	MachineAdjustment
*5	Fusing Speed
*6	Leading Edge Adj.
*7	Leading(Duplex)
*8	Centering(Duplex)
*9	Vertical Adj.
*10	Print Regist Loop
*11	Color Reg.
*12	Exhaust Fan Delay
*13	LD Adjust
*14	LD Rad delay Adj
*15	LD Light balance
*16	BypassTray Adjust
*17	[Printer Area] → [EraseLeadingEdge]
*18	ProcessAdjustment
*19	Background Margin
*20	TransferOutputAdj
*21	1st Transfer

*22	2nd Transfer
*23	Stabilization
*24	Initialize+Stabi.
*25	[DensityAdjustment] → [Thick/Yellow]
	[DensityAdjustment] → [Thick/Magenta]
	[DensityAdjustment] → [Thick/Cyan]
	[DensityAdjustment] → [Thick/Black]
*26	Replenish Toner
*27	[DensityAdjustment] → [BlackImageDensity]
*28	Bias Choice
*29	System Settings
*30	Destination
*31	Enter Serial No.
*32	Don't go to Sleep
*33	Foolscap Size
*34	Enter Setup Date
*35	Initialize
*36	Inferior Cut
*37	IU Yield Setting
*38	StatusLED Setting
*39	[Option Setting] → [HDD Installation]
*40	Image Controller
*41	Unit Replacement TonerNearEmpty
*42	SoftwareSWSetting
*43	LCT Size Setting
*44	Clear Counter
*45	Yield Counter
*46	CounterSer.called
*47	[System Settings] → [Maintenance Ctr]
*48	Counter for Mode
*49	TimeSeriesSerCall
*50	Time series JAM
*51	Management List
*52	Machine Status
*53	[Machine Status] → [Memory Check]
*54	[Machine Status] → [HDD Format]
*55	Gradation
*56	Finisher Adjust
*57	CB-FN Adjust
*58	Center Staple Pos Half-Fold Pos.
*59	Punch Reg. Loop
*60	PunchStopPosition
1 *61	FN-X3 Adjust
1 *62	Center Staple Pos

*63	Half-Fold Pos.
*64	Punch Option
*65	ForwardAccessSet *1

16.4 Date/Time Input mode

- This mode is used to set time-of-day and date.

16.4.1 Date & Time Setting mode screen

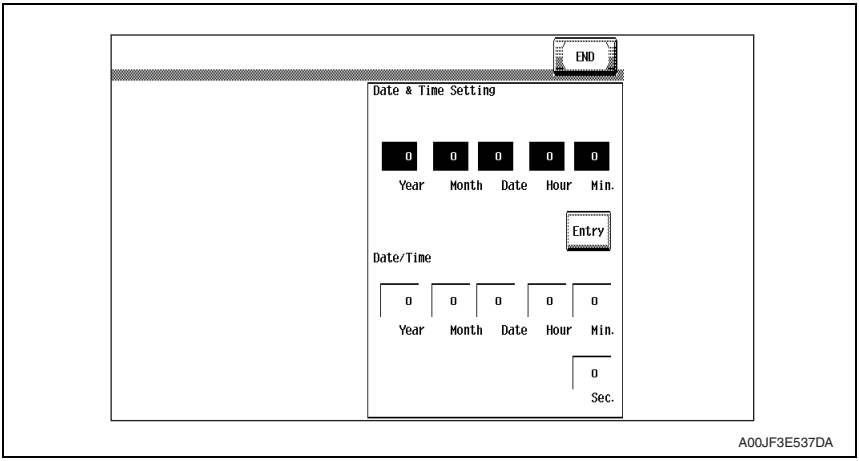

A. Date & Time Setting mode setting procedure

1. Call the Service Mode to the screen.
2. Click the following keys in this order.
   Stop → 1 → 1 → 4 → 4 → Clear
3. Enter year, month, day, hour, and minute, in that order, from 10-key pad.
   (Year 4 digits → Month 2 digits → Day 2 digits → Hour 2 digits → Minute 2 digits)

NOTE

- **When setting the month, day, hour, or minute, enter "0" first if the data one digit.**

4. Make sure that correct figures have been entered and then click [Entry].
5. Click [END] to return to the Service Mode.

16.5 Machine

16.5.1 Fusing Temperature

<table>
<tr><td>Functions</td><td>• To adjust individually the temperature of the heating roller and the fusing pressure roller for each type of paper, thereby printing with varying fusing performance under changing environmental conditions.</td></tr>
<tr><td>Use</td><td>• When fusing performance is poor, or wax streak or offset occurs when the type of paper is changed or environmental conditions change.
• Use when the curling of the paper due to the paper type or environmental change occurred, or when the paper jam, as well as stapling or folding position error occurred due to the curling of the paper.
• By setting the temperature higher (+), gloss of print can be improved.
• By setting the temperature lower (-), exit roller mark can be reduced.</td></tr>
<tr><td>Adjustment Range</td><td>
<table>
<tr><th>Paper type</th><th>Setting range</th><th>step</th></tr>
<tr><td>Plain Paper</td><td>-20 °C to +5 °C</td><td>5 °C</td></tr>
<tr><td>OHP Film</td><td>-20 °C to +5 °C</td><td>5 °C</td></tr>
<tr><td>Thick 1</td><td>-20 °C to +5 °C</td><td>5 °C</td></tr>
<tr><td>Thick 2</td><td>-20 °C to +5 °C</td><td>5 °C</td></tr>
<tr><td>Thick 3</td><td>-20 °C to +5 °C</td><td>5 °C</td></tr>
<tr><td>Thick 4</td><td>-20 °C to +5 °C</td><td>5 °C</td></tr>
<tr><td>Post.</td><td>-20 °C to +5 °C</td><td>5 °C</td></tr>
<tr><td>Enve.</td><td>-5 °C to +5 °C</td><td>5 °C</td></tr>
</table>
</td></tr>
<tr><td>Adjustment Instructions</td><td>If fusing performance is poor, increase the setting.
If wax streaks occur, decrease the setting.
If offset is poor, decrease the setting.
If curling of the paper occurs, decrease the setting.</td></tr>
<tr><td>Setting/ Procedure</td><td>NOTE
• To adjust the fusing temperature, adjust on the heating side first. If the further adjustment is necessary, adjust on the pressure side.

1. Call the Service Mode to the screen.
2. Click these keys in this order: [Machine] → [Fusing Temperature].
3. Select the paper type and fusing roller type (Heater Roller or Pressure).
4. Enter the new setting from the [+] / [-] key.
5. Click [END] to validate the adjustment value.
6. Return to the basic screen.
7. Output two or three test printing and check to see whether the image has any problem.
8. Make the adjustment for each type of paper.</td></tr>
</table>

16.5.2 Fusing Transport Speed

<table>
<tr><td>Functions</td><td>• To adjust the speed of the fusing drive motor so as to match the fusing speed with transport speed.</td></tr>
<tr><td>Use</td><td>• Brush effect or blurred image is evident as a result of changes in environmental conditions or degraded durability.</td></tr>
<tr><td>Variable Range</td><td>-20 to +20 (in 1 increments)</td></tr>
<tr><td>Adjustment Instructions</td><td>If brush effect is evident, vary the setting value and check for image.
If a blurred image occurs, decrease the setting.</td></tr>
<tr><td>Setting/ Procedure</td><td>1. Call the Service Mode to the screen.
2. Click these keys in this order: [Machine] → [Fusing Transport Speed].
3. Select the transport speed, at which the brush effect or blurred image has occurred.

<table><tr><th>Transport speed</th><th>Paper Setting</th></tr><tr><td>166.6 mm/s</td><td>Plain paper: color/monochrome, OHF film</td></tr><tr><td>55.5 mm/s</td><td>Thick 1, Thick 2, Thick 3, Thick 4, envelope, postcard: monochrome/color</td></tr></table>
4. Enter the new setting from the 10-key pad.
5. Click [END] to validate the adjustment value.
6. Check the printed image for any image problem.</td></tr>
</table>

16.5.3 Printer Area

A. Leading Edge Adjustment

Functions	• To vary the print start position in the sub scan direction for each of different paper types in the manual bypass tray. (To adjust the timing where paper is sent out from the timing roller)
Use	• The PH unit has been replaced. • The paper type has been changed. • The printed image deviates in the sub scan direction. • A faint image occurs on the leading edge of the image. • This setting can be made independently for plain paper, Thick 1, Thick 2, Thick 3, Thick 4, OHP films, and envelopes.
Adjustment Specification	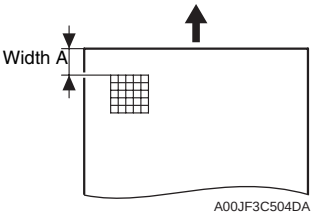 A00JF3C504DA Width A on the test pattern produced should fall within the following range. Specifications: 4.2 ± 0.5 mm Setting range: -3.0 mm to +3.0 mm (in 0.2 mm increments)
Adjustment Instructions	If width A is longer than the specifications, make the setting value smaller than the current one. If width A is shorter than the specifications, make the setting value greater than the current one.
Setting/ Procedure	*1.* Place A3 paper on the manual bypass tray. *2.* Call the Service Mode to the screen. *3.* Click [Machine] → [Printer Area] → [Leading Edge Adjustment]. *4.* Select the [Plain Paper]. *5.* Click the Start key to let the machine produce a test pattern. *6.* Check the dimension of width A on the test pattern. *7.* If width A falls outside the specified range, change the setting using the [+] / [-] key. *8.* Click the Start key to let the machine produce a test pattern. *9.* Check the dimension of width A on the test pattern. *10.*If width A is outside the specified range, change the setting again and make a check again. *11.*If width A falls within the specified range, click [END]. *12.*Following the same procedure, adjust for Thick 1 to 4, OHP film, and Enve.

B. Centering

Functions	• To vary the print start position in the main scan direction for each paper source.
Use	• The PH Unit has been replaced. • A paper feed unit has been added. • The printed image deviates in the main scan direction.
Adjustment Specification	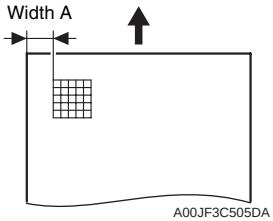 Width A on the test pattern produced should fall within the following range. Specifications: 3.0 ± 0.5 mm Setting range: -3.0 mm to +3.0 mm (in 0.2 mm increments)
Adjustment Instructions	If width A is longer than the specifications, make the setting value smaller than the current one. If width A is shorter than the specifications, make the setting value greater than the current one.
Setting/ Procedure	*1.* Call the Service Mode to the screen. *2.* Click [Machine] → [Printer Area] → [Centering]. *3.* Select the paper source to be adjusted. *4.* Click the Start key to let the machine produce a test pattern. *5.* Check the dimension of width A on the test pattern. *6.* If width A falls outside the specified range, change the setting using the [+] / [-] key. *7.* Click the Start key to let the machine produce a test pattern. *8.* Check the dimension of width A on the test pattern. *9.* If width A is outside the specified range, change the setting again and make a check again. *10.* If width A falls within the specified range, click [END]. *11.* Following the same procedure, adjust for all other paper sources. (Use A4 or 8 $^1/_2$ × 11 plain paper for the bypass.)

C. Leading Edge Adj. (Duplex Side 2)

Functions	• For individual types of paper, this function allows the adjustment of the image write start position in the sub scan direction on the 2nd side of duplex printing.
Use	• This adjustment is made when the image on the 2nd side of paper deviates from the original position in the sub scan direction. • This adjustment can be made independently for each of plain paper, thick paper 1/ 1+, thick paper 2, and thick paper 3.
Adjustment Specification	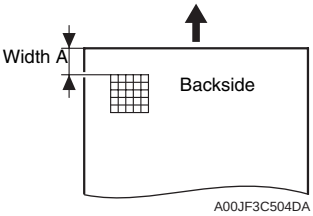 A00JF3C504DA Width A on the test pattern produced should fall within the following range. Specifications: 4.2 ± 0.5 mm Setting range: -3.0 mm to +3.0 mm (in 0.2 mm increments)
Adjustment Instructions	If width A is longer than the specifications, make the setting value smaller than the current one. If width A is shorter than the specifications, make the setting value greater than the current one.
Setting/ Procedure	*1.* Place A3 paper on the manual bypass tray. *2.* Call the Service Mode to the screen. *3.* Click [Machine] → [Printer Area] → [Leading Edge Adj. (Duplex Side 2)]. *4.* Select the [Plain Paper]. *5.* Click the Start key to let the machine produce a test pattern. *6.* Check the dimension of width A on the test pattern. *7.* If width A falls outside the specified range, change the setting using the [+] / [-] key. *8.* Click the Start key to let the machine produce a test pattern. *9.* Check the dimension of width A on the test pattern. *10.*If width A is outside the specified range, change the setting again and make a check again. *11.*If width A falls within the specified range, click [END]. *12.*Following the same procedure, adjust for Thick paper.

D. Centering (Duplex 2nd Side)

Functions	• To vary the print start position in the main scan direction for each paper source in the 2-Sided mode.
Use	• The image on the backside of the 2-sided print deviates in the main scan direction.
Adjustment Specification	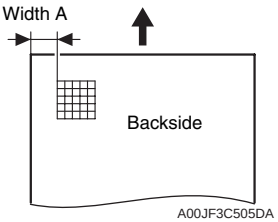 •Width A on the test pattern produced should fall within the following range. •For measurement, use the image produced on the backside of the test pattern. Specifications: 3.0 ± 0.5 mm Setting range: -3.0 mm to +3.0 mm (in 0.2 mm increments)
Adjustment Instructions	• If width A is longer than the specifications, make the setting value smaller than the current one. • If width A is shorter than the specifications, make the setting value greater than the current one.
Setting/ Procedure	*1.* Call the Service Mode to the screen. *2.* Click [Machine] → [Printer Area] → [Centering (Duplex 2nd Side)]. *3.* Select the paper source to be adjusted. *4.* Click the Start key to let the machine produce a test pattern. *5.* Check the dimension of width A on the test pattern. *6.* If width A falls outside the specified range, change the setting using the [+] / [-] key. *7.* Click the Start key to let the machine produce a test pattern. *8.* Check the dimension of width A on the test pattern on the backside of the printed image. *9.* If width A is outside the specified range, change the setting again and make a check again. *10.*If width A falls within the specified range, click [END]. *11.*Following the same procedure, adjust for all other paper sources. (Use A4 or 8 $^{1}/_{2}$ × 11 plain paper for the manual bypass tray.)

E. Paper Feed Direction Adj.

Functions	• To synchronize the paper transport speed with the image writing speed.
Use	• Feed Direction Adjustment becomes necessary. • The printed image distorts (stretched, shrunk). • When the printed image is stretched in the sub scan direction. • This setting can be made independently for plain paper, Thick 1, Thick 2, Thick 3, and Thick 4.
Adjustment Specification	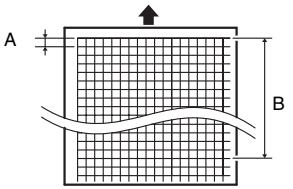 A00JF3C506DA Width A and width B on the test pattern produced should fall within the following ranges. Width A: equivalent to one grid Width B: equivalent to 48 grids Specifications A: 7.9 to 8.3 B: 389.1 to 392.1 Setting Range A, B: -7 to +7
Adjustment Instructions	If width A or B is longer than the specifications, make the setting value smaller than the current one. If width A or B is shorter than the specifications, make the setting value greater than the current one.
Adjustment Procedure	*1.* Load manual bypass tray with A3 or 11 × 17 plain paper. *2.* Call the Service Mode to the screen. *3.* Click [Machine] → [Printer Area] → [Paper Feed Direction Adj.]. *4.* Select [Plain Paper]. *5.* Click the Start key to let the machine produce a test pattern. *6.* Check width A (equivalent to one grid) and width B (equivalent to 48 grids) on the test pattern. *7.* Click these keys in this order: [Machine] → [Printer Area] → [Paper Feed Direction Adj]. *8.* If width of A or B falls outside the specified range, change the setting using the [+]/[-] keys. *9.* Click the Start key to let the machine produce a test pattern again. *10.*Check width A and width B on the test pattern. *11.*If width A or B falls outside the specified range, change the setting value and make a check again. *12.*If width A or B falls within the specified range, click [END]. *13.*Following the same procedure, adjust for thick paper.

16.5.4 Printer Resist Loop

<table>
<tr><td>Functions</td><td>• To set the correction value of the paper loop length for each process speed of tray 1, tray 2 to tray 4 / LCT, bypass, and duplex.
• To adjust the length of the loop formed in paper before the registration rollers.
• Use “Paper Passage” for paper passage check.</td></tr>
<tr><td>Use</td><td>When a paper skew occurs.
When a paper misfeed occurs.</td></tr>
<tr><td>Adjustment Instructions</td><td>To decrease the loop amount: Decrease the setting value
To increase the loop amount: Increase the setting value</td></tr>
<tr><td>Adjustment Range</td><td>• The adjustable range is different depending on paper source and processing speed.
<table>
<tr><th></th><th>Tray 1</th><th>Tray 2/3/4 LCT</th><th>Duplex</th><th>Manual Tray</th></tr>
<tr><td>166.6 mm/sec</td><td>-5 to +5</td><td>-5 to +5</td><td>-5 to +5</td><td>-5 to +5</td></tr>
<tr><td>55 mm/sec</td><td>-15 to +15</td><td>-15 to +15</td><td>-8 to +8</td><td>-15 to +15</td></tr>
</table></td></tr>
<tr><td>Setting/ Procedure</td><td>1. Call the Service Mode to the screen.
2. Click these keys in this order: [Machine] → [Printer Resist Loop].
3. Select a paper source and a processing speed where the settings are made by clicking the corresponding keys.
4. Enter the new setting from the 10-key pad.</td></tr>
</table>

16.5.5 Color Registration Adjustment

A. Cyan, Magenta, Yellow

Functions	• To adjust color shift if there is any when comparing the original with printed image of the plain or thick paper.
Use	• To correct any color shift. • This setting can be made independently for plain paper, Thick 1, Thick 2, Thick 3, and Thick 4.
Adjustment Range	"0" (-6 to +6 dot)
Adjustment Instructions	If the cross deviates in the direction of A, increase the setting. If the cross deviates in the direction of B, decrease the setting.
Setting/ Procedure	*1.* Call the Service Mode to the screen. *2.* Click these keys in this order: [Machine] → [Color Registration Adjustment]. *3.* Load manual bypass tray with A3/11 x 17 or A4/8 $^{1}/_{2}$ x 11 plain paper. *4.* Click the Start key. *5.* On the test pattern produced, check for deviation between the black line and the line of each color at positions X and Y. *6.* Select the color to be adjusted. *7.* Using the [+] / [-] key, change the setting value as necessary. (At this time, only the line of the selected color moves.) *8.* Produce another test pattern and make sure that there is no deviation. Check Procedure Check point X, Y 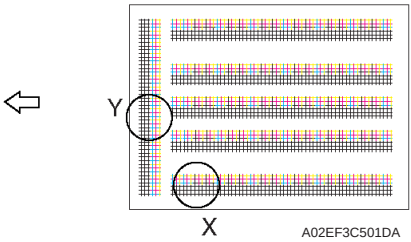 A02EF3C501DA Adjustment for X direction: Check point X If the cross deviates in the direction of A, increase the setting. If the cross deviates in the direction of B, decrease the setting. Direction of A 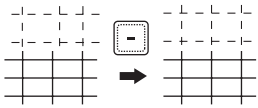 A02EF3C502DA Direction of B 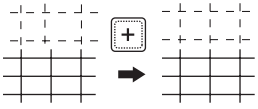 A02EF3C503DA Adjustment for Y direction: Check point Y If the cross deviates in the direction of A, increase the setting. If the cross deviates in the direction of B, decrease the setting. Direction of A 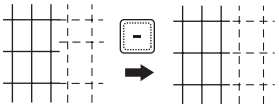 A02EF3C504DA Direction of B 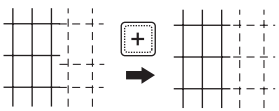 A02EF3C505DA

16.5.6 Exhaust Fan Stop Delay

Functions	• To set the period of time before the exhaust fan motor stops.
Use	• At the completion of a print job/image stabilization or at jam/malfunction, the fan motor rotating at full speed comes to a stop. The period of time before the fan motor stops can be delayed so that ozone left around the PC drum can be discharged.
Setting/ Procedure	• 0 to 15 (minutes) can be entered with the ten-key pad. (Default is 0.) **NOTE** • **When this setting is set to 0 (minute), the fan motor runs for 5 seconds before it stops.**

16.5.7 LD adjustment

A. LD delay adjust.

Functions	• Not Used.
Use	
Setting/ Procedure	

B. LD lightness balance adjust.

Functions	• This function adjusts the LD lightness balance between the two LDs to correct the difference of LD lightness between the LDs.
Use	• This setting is made after the PH unit or the service EEPROM board is replaced. • This adjustment is made to prevent uneven density in highlighted halftone area being caused by inappropriate laser intensity.
Setting/ Procedure	*1.* Call the Service Mode to the screen. *2.* Click these keys in this order: [Machine] → [LD adjustment] → [LD lightness balance adjust.]. *3.* Select [For adjustment] and click Start key. *4.* The test print includes seven rows of patterns produced with different levels of LD2 light intensity towards LD1. 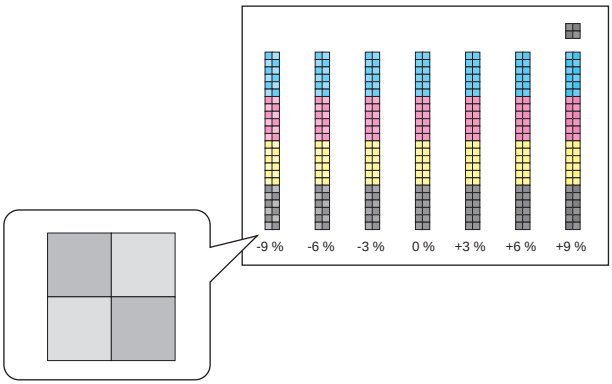 A00JF3C527DA *5.* Three squares each made up by four small squares are printed with the different four colors. The two small squares diagonal to each other are printed using the same LD. Depending on individual print timing, it is decided that which pair of small squares corresponds to which LD. The pair of small squares where image density changes corresponds to LD2. *6.* From the test pattern, select the pattern where the least density difference appears between LD1 and LD2 for each color. *7.* Enter the adjustment value corresponding to the pattern you selected (see the above illustration) or a value close to the adjustment value using the ten key pads on the panel. *8.* Select [For effect confirmat.] and click Start key. *9.* Check that LD2 small squares have no image noise of woodgrain. *10.*Click [OK].

16.5.8 Manual Bypass Tray Adjustment

Functions	• To set the maximum width and the minimum width for the manual bypass paper size unit of the manual bypass guide.
Use	• Use when the manual bypass paper size unit of the manual bypass guide has been changed. • Use when a false paper size is displayed when the manual bypass is used.
Setting/ Procedure	*1.* Call the Service Mode to the screen. *2.* Click these keys in this order: [Machine] → [Manual Bypass Tray Adjustment]. *3.* Click [Max. Width]. *4.* Load the bypass tray with paper having a width of 297 mm. *5.* Click the Start key and check that the results are [OK]. *6.* Click [Min. Width.]. *7.* Load the bypass tray with paper having a width of 100 mm. *8.* Click the Start key and check that the results are [OK]. ✻ Make the adjustment again if the results are [NG].

16.5.9 Lead Edge Erase Adjustment

Functions	• To set the leading edge erase amount of the paper.
Use	• Upon user requests, it is possible to specify the void area where image is not printed along the leading edge.
Setting/ Procedure	• The default setting is 4 mm. "4 mm" 5 mm 7 mm **NOTE** • **When "4 mm" is selected, 4.2 mm is the actual amount to be erased in print based on the control system of the machine.**

16.6 Firmware Version

Functions	• To check the firmware version.
Use	• Use when the firmware is upgraded. • When the firmware is upgraded or PWB is replaced.
Setting/ Procedure	*1.* Call the Service Mode to the screen. *2.* Click [Firmware Version]. *3.* Select the appropriate key from 1 to 3 to check the Firmware Version.

16.7 Imaging Process Adjustment

16.7.1 X-Rite Caribration

NOTE

- **When customer needs high-quality color printing, performing calibration with X-Rite is recommended.**
- It will not be displayed when the following setting is set to “ON”.
  [Service Mode] → [Image Process Adjustment] → [Dev. Bias Choice]

Functions	• To make an automatic adjustment of gradation based on the test pattern produced and the readings taken by the X-Rite.
Use	• Color reproduction performance becomes poor. • The IU has been replaced. • The image transfer belt unit has been replaced. ✻ The Adj. Values of “Dark” and “Highlight” shown on the gradation adjust screen represent how much corrections are made to produce an ideal image output. Conv. Value shows the difference from the ideal image density. ✻ The closer the Conv. Value to 0, the more ideal the image. • Gradation Mode : It gives the highest priority to gradation performance of the image as it adjusts. • Resolution Mode : It gives the highest priority to reproduction performance of letters and lines as it adjusts.
Setting/ Procedure	See P.52

16.7.2 D Max Density

Functions	• To adjust gradation, color, and image density to target reproduction levels by varying the maximum amount of toner sticking to paper through auxiliary manual fine-adjustment of gamma of each color after gradation adjust.
Use	• An image quality problem is not corrected even after gradation adjust has been run.
Adjustment Range	• The default setting is 0. -10 to +10 (step: 1 *) *: 1 step corresponds to 0.03 in density difference.
Adjustment Instructions	To increase the maximum amount of toner sticking, increase the setting value. To decrease the maximum amount of toner sticking, decrease the setting value.
Setting/ Procedure	*1.* Call the Service Mode to the screen. *2.* Click these keys in this order: [Imaging Process Adjustment] → [D Max Density]. *3.* Select the color to be adjusted. *4.* Enter the new setting from the 10-key pad or [+/-]. *5.* Click [END] to return to the [Process] menu screen. *6.* Click [Stabilizer]. *7.* Click [Stabilizer Mode]. *8.* Click the Start key to validate the adjustment value. *9.* Check the printed image for any image problem. **NOTE** • **If the setting value has been changed, be sure to run an image stabilization sequence to make valid the new value.**

16.7.3 TCR Level Setting

Functions	• To adjust the T/C control level when an abnormal image density occurs as a result of a change in the amount of charge of toner and carrier due to an environmental change.
Use	• Use when T/C changes due to changes in environmental conditions of the user site.
Adjustment Range	• The default setting is 0. -3 to +3 (1 step :0.5 %, Center value 0 corresponds to 7 % T/C ratio.)
Adjustment Instructions	To increase T/C, increase the setting value. To decrease T/C, decrease the setting value.
Adjustment Procedure	*1.* Call the Service Mode to the screen. *2.* Click these keys in this order: [Process] → [TCR Level Setting]. *3.* Select the color to be adjusted. *4.* Enter the new setting from the 10-Key Pad and [+/-] key. *5.* Click [END] to validate the adjustment value. *6.* Check the printed image for any image problem.

16.7.4 Background Voltage Margin

Functions	• To adjust the highlight portion (fog level) to the target reproduction level by making an auxiliary manual fine-adjustment of γ of each color after gradation adjust.
Use	• Use when a foggy background occurs due to a printer problem.
Adjustment Range	• The default setting is 0. -5 to +5 (step: 1)
Adjustment Instructions	To make the background level foggier, decrease the setting value. To make the background level less foggy, increase the setting value.
Setting/ Procedure	*1.* Call the Service Mode to the screen. *2.* Click these keys in this order: [Imaging Process Adjustment] → [Background Voltage Margin]. *3.* Select the color to be adjusted. *4.* Enter the new setting from the 10-key pad. *5.* Click [END] to return to the [Image Adjust] menu screen. *6.* Click [Stabilizer]. *7.* Click [Stabilization Only]. *8.* Click the Start key to validate the adjustment value. *9.* Check the printed image for any image problem. **NOTE** • **If the setting value has been changed, be sure to run an image stabilization sequence to make valid the new value.**

16.7.5 Transfer Output Fine Adjustment

A. Primary transfer adj.

Functions	• Adjust the output value for the 1st image transfer voltage.
Use	• To use when white spots appeared.
Adjustment Range	• The default setting is 0. -8 to +7 (step: 1)
Adjustment Instructions	Adjust the output value for the 1st image transfer voltage by; Increasing it: Increase the setting value (white spots will decrease) Decreasing it: Decrease the setting value
Setting/ Procedure	*1.* Call the Service Mode to the screen. *2.* Select [Test Mode] → [Halftone Pattern] to output the red or green test pattern. See P.373 *3.* When the test pattern image has white spots, adjust with the following procedure. *4.* Click these keys in this order: [Imaging Process Adjustment] → [Transfer Output Fine Adjustment]. *5.* Select [Primary transfer adj.]. *6.* Select the color. *7.* Change the setting value using the [+] / [-] keys. *8.* Click [OK] key to set the adjustment value. Gradually increase the adjustment value to the acceptable white spots level while checking the test pattern. **NOTE** • **PC Drum memory may occur by taking measure to white spots occurred by increasing the 1st image transfer voltage to adjust it.** **Check the image on the test print when adjusting.**

B. Secondary transfer adj.

Functions	• Adjust the 2nd image transfer output (ATVC) on the 1st page and the 2nd page for each paper type.
Use	• To use when the transfer failure at the trailing edge occurs.
Adjustment Range	• The default setting is 0. -8 to +7 (step: 1)
Adjustment Instructions	To increase the ATVC value (in the direction of a foggier image), increase the setting value. To decrease the ATVC value (in the direction of a less foggy image), decrease the setting value.
Setting/ Procedure	*1.* Call the Service Mode to the screen. *2.* Click these keys in this order: [Imaging Process Adjustment] → [Transfer Output Fine Adjustment]. *3.* Select [Secondary transfer adj.]. *4.* Select the side of the image (1st side or 2nd side), on which the transfer failure occurs. **NOTE** • **For envelopes, only first side can be selected.** *5.* Select the paper type with the transfer failure. *6.* Enter the new setting from the [+] / [-] keys. *7.* Click [END] to validate the adjustment value. *8.* Check the printed image for any image problem.

16.7.6 Stabilizer

A. Stabilization Only

Functions	• The image stabilization sequence is carried out without clearing the historical data of image stabilization control.
Use	• Use if an image problem persists even after gradation adjustment has been executed. • When [D Max Density] and [Background Voltage Margin] of Service Mode are changed.
Setting/ Procedure	*1.* Call the Service Mode to the screen. *2.* Click these keys in this order: [Imaging Process Adjustment] → [Stabilization Only]. *3.* Click the Start key to start Stabilizer. The Start key turns red and stays lit up red during the Stabilizer sequence. *4.* Stabilizer is completed when the Start key turns blue.

B. Initialize+Image Stabilization

Functions	• To carry out an image stabilization sequence after the historical data of image stabilization control has been initialized.
Use	• Use if an image problem persists even after gradation adjustment has been executed. • Use if tone reproduction and maximum density are faulty even after Stabilizer Mode has been executed. • When color shift correction is needed again after the machine maintenance. • After executing the skew adjustment reset.
Setting/ Procedure	*1.* Call the Service Mode to the screen. *2.* Click these keys in this order: [Imaging Process Adjustment] → [Stabilizer]. *3.* Click [Initialize+Image Stabilization]. *4.* Click the Start key to start stabilizer. The Start key turns red and stays lit up red during the Stabilizer sequence. *5.* Stabilizer is completed when the Start key turns blue.

16.7.7 Thick Paper Density Adjustment

Functions	• To fine-adjust density of printed images of each color for thick paper and OHP transparencies. (Only black color adjustable for OHP transparencies)
Use	• To change the density of the printed image for each color with thick paper and OHP transparencies.
Adjustment Range	• The default setting is 0. -5 to +5 (step: 1)
Adjustment Instructions	Light color: Click the Darker key. Dark color: Click the Lighter key.
Setting/ Procedure	*1.* Call the Service Mode to the screen. *2.* Click these keys in this order: [Imaging Process Adjustment] → [Thick Paper Density Adjustment]. *3.* Click the Lighter or Darker key for the desired color to correct the image density.

16.7.8 TCR Toner Supply

Functions	• To adjust the set T/C level by replenishing an auxiliary supply of toner when a low ID occurs due to a lowered T/C after large numbers of prints have been made of originals having a high image density.
Use	• When there is a drop in T/C.
Setting/ Procedure	*1.* Call the Service Mode to the screen. *2.* Click these keys in this order: [Imaging Process Adjustment] → [TCR Toner Supply]. *3.* Select the color, for which supply of toner is to be replenished. *4.* Clicking the Start key will let the machine detect the current toner density and; if the density is lower than a reference value, a toner replenishing sequence and then a developer agitation sequence are run. *5.* These sequences are repeated up to a maximum of four times until the toner density reaches the reference value. If the toner density is found to be higher than the reference value, only a developer agitation sequence is carried out.

16.7.9 Monochrome Density Adjustment

Functions	• To fine-adjust the density of the printed image for a black print.
Use	• To vary the density of the printed image of a black print.
Adjustment Range	• The default setting is 0. -2 to +2 (step: 1)
Adjustment Instructions	If the black is light, click the Darker key. If the black is dark, click the Lighter key.
Setting/ Procedure	*1.* Call the Service Mode to the screen. *2.* Click these keys in this order: [Imaging Process Adjustment] → [Monochrome Density Adjustment]. *3.* Click [Lighter] or [Darker] as necessary to correct the image density.

16.7.10 Dev. Bias Choice

Functions	• To change the setting of the developing bias voltage. • When this function is turned ON, it decreases the developing bias voltage, thereby preventing voltage leak from occurring.
Use	• Use when patches of white occur in the image in an ambience of low atmospheric pressure, such as in high altitudes. • If ON is set, the screen doesn't display [Service Mode] → [Imaging Process Adjustment] → [X-Rite Caribration] and the Gradation Adjust is not allowed.
Setting/ Procedure	• The default setting is OFF. ON “OFF”

16.8 CS Remote Care

16.8.1 Outlines

- CS Remote Care enables the machine and the computer at CS Remote Care center to exchange data through telephone line in order to control the machine.
- CS Remote Care enables the machine to call the computer at the center when trouble occurs. It also enables the computer at the center to contact the machine for the necessary data.
- Data which CS Remote Care handles can be divided into the following groups.
  a. Data which show the status of use of the machine such as total count, PM count.
  b. Data which show the abnormal situation on the machine such as where and how often errors occur.
  c. Data on adjustment
  d. Data on setting

NOTE

- **It cannot be set when the following setting is set to "ON".**
  [Admin. Settings] → [Security Settings] → [EnhancedSecurity]

16.8.2 Setting up the CS Remote Care

NOTE

- **For resetting up the machine which CS Remote Care has already been set up, clear the RAM for CS Remote Care before resetting.**
  See P.333
- **When using the telephone line for connection, use the recommended modem. (For recommended modem, contact responsible person of KMBT.)**

Step	Procedure	
	Using the telephone line modem	Using E-mail
0	Register the device ID to the application at CS Remote Care center. The initial connection is not available unless the device ID is registered.	
1	Connecting the modem Turn the power for the modem OFF. Connect the machine and the modem with a modem cable. Connect the modem and the wall jack with a modular cable. * For connecting the modular cable, see the manual for the modem.	Be sure to remove the telephone line modem when e-mail is used.
2	Clearing the RAM *1.* Select [Service Mode] → [CS Remove Care], and click [Detail Setting]. *2.* Click [RAM Clear]. *3.* Select Set, and click [OK]. See P.333	
3	Selecting the CS Remote Care function Select [Service Mode] → [CS Remove Care] → [System Selection], and click [Modem].	Selecting the CS Remote Care function Select [Service Mode] → [CS Remote Care] → [System Setting], and click [E-Mail 1] or [E-Mail 2].
4	Inputting the ID Code *1.* Select [Service Mode] → [CS Remote Care] → [ID Code], and click [ID Code]. *2.* Input the seven digits ID of the service person, and click [ID Code] again. See P.331	

Step	Procedure	
	Using the telephone line modem	Using E-mail
5	Setting the date and time for CS Remote Care *1.* Select [Service Mode] → [CS Remote Care], and click [Detail Setting]. *2.* Click [Date & Time Setting]. *3.* Input the date, time and the time zone using the 10-key pad, and click [Set]. See P.332	
6	Setting the Center ID *1.* Select [Service Mode] → [CS Remote Care], and click [Detail Setting]. *2.* Click [Machine Setting] → [Center ID], and input the Center ID (five digits). See P.332	
7	Setting the Device ID *1.* Select [Service Mode] → [CS Remote Care], and click [Detail Setting]. *2.* Click [Machine Setting] → [Device ID], and input Device ID (nine digits). See P.332	
8	Proceed to step 9.	Encryption setting *1.* Select [Service Mode] → [CS Remote Care], and click [Detail Setting]. *2.* Click [Basic Setting] and select either Encryption or No Encryption. Retransmission interval on e-mail delivery error • When selecting [E-mail2], set the retransmission interval on e-mail delivery error in software SW setting. See P.325
9	Setting the telephone number of the Center *1.* Select [Service Mode] → [CS Remote Care], and click [Detail Setting]. *2.* Click [Machine Setting] → [Center Telephone Number]. *3.* Input the telephone number of the center using the 10-keys pad and [P], [T], [W], [-]. See P.332	Setting the Respond Timeout *1.* Select [Service Mode] → [CS Remote Care], and click [Detail Setting]. *2.* Click [Respond Timeout] and enter the response timeout using the 10-key pad. **NOTE** • **Under normal conditions, there is no need to change the default setting.** See P.332
10	Inputting the device telephone number *1.* Select [Service Mode] → [CS Remote Care], and click [Detail Setting]. *2.* Click [Machine Setting] → [Device Telephone Number]. *3.* Input the Device telephone number using the 10-key pad and [P], [T], [W], [-]. See P.332	Proceed to step 11.

Step	Procedure	
	Using the telephone line modem	Using E-mail
11	Inputting the AT command for initializing the modem *1.* Select [Service Mode] → [CS Remote Care] → and click [Detail Setting]. *2.* Click [AT Command]. *3.* Input AT Command. **NOTE** • **Change this command only when it is necessary. (They do not need to be changed in normal condition.)** • **For details on AT command, see the manual for the modem.** See P.334	Setting the E-mail address *1.* Select [Service Mode] → [CS Remote Care], and click [Server Set]. *2.* Click [Server for RX], and set POP3 server address, POP3 login name, POP3 password and POP3 port number. See P.334 *3.* Click [Receive], and set the E-Mail address, Mail Check, Connection Time Out and APOP Authentication. See P.334 *4.* Click [Send], and set the SMTP server address, SMTP port number, Connection Time Out, and APOP Authentication. See P.334 *5.* Click [TX/RX Test], and click Start key to carry out a transmission/reception test. If it fails to exchange messages, see the error message to take necessary measure, and try again. See P.334
12	Setting the DIPSW for CS Remote Care **NOTE** • **This setting is not normally necessary. Take this step only when necessary in a specific connecting condition.**	Proceed to step 13.
13	Executing the initial transmission *1.* Select [Service Mode] → [CS Remote Care], and click [Detail Setting]. *2.* Click [initial transmission] key on the right bottom of the screen to start initial transmission. *3.* When the machine is properly connected with the center, CS Remote Care setting screen will be displayed. **NOTE** • **The initial transmission key at the right bottom of the screen will be displayed only when the center ID, the device ID, Telephone number of the center and the device telephone number have been input.** See P.332	Receiving the initial connection E-mail message Sending the initial connection E-mail message from the center to the address of the printer. **NOTE** • **When receiving the initial connection E-mail message from the center while CS Remote Care-related screen is being displayed, the current setting information will be deleted, and CS Remote Care setting will be displayed.** • **For sending the initial connection E-mail, see the manual for CS Remote Care center.** • **Messages can be exchanged only between the center with initial connection and the printer.** • **The initial connection from the center will be carried out, and the E-mail address of the center will be stored in the printer.** • **When the initial registration is complete, the E-mail address of the center will be displayed by selecting [Service Mode] → [CS Remote Care] → [Detail Setting], [Basic Setting] → [E-Mail address].**

16.8.3 Software SW setting for CS Remote Care

NOTE

- **SW bits data are written into the NVRAM every time a change is made. In case you changed bit data by accident, be sure to restore the previous state.**

A. Input procedure

1. Select [Service Mode] → [CS Remote Care] → [Detail Setting], and click [Software Switch Setting].
2. Click [Switch No.], and input the switch number (two digits) using the 10-key pad.
3. Click [Bit Assignment], and select switch bit number using the arrow keys, and input 0 or 1 using the 10-key pad.
   (For setting by hexadecimal numbers, click [HEX Assignment] key, and input using the 10-key pad or A to F keys.)
4. Click [Fix].

NOTE

- **About functions of each switch, see to "B. List of software SW for CS Remote Care."**

B. List of software SW for CS Remote Care

NOTE

- **Do not change any bit not described on this table.**

SW No.	Bit	Functions	0	1	Default
SW 01	0	Dial mode	Pulse	Tone	1
	1	Reservation	—	—	0
	2	Reservation	—	—	0
	3	Reservation	—	—	0
	4	Baud rate	*1	*1	0
	5		*1	*1	0
	6		*1	*1	0
	7		*1	*1	1
SW 02	0	Emergency transmission	Do not call	Call	1
	1	Auto call on date specification	Do not call	Call	1
	2	Reservation	—	—	0
	3	Reservation	—	—	0
	4	Reservation	—	—	0
	5	Auto call on the IC Life	Do not call	Call	1
	6	Auto call on CCD clamp/gain adjustment failure	Do not call	Call	1
	7	Reservation	—	—	0
SW 03	0	Reservation	—	—	0
	1	Auto call on the toner empty	Do not call	Call	1
	2	Reservation	—	—	0
	3	Auto call on the waste toner bottle full	Do not call	Call	1
	4 to 7	Reservation	—	—	0
SW 04	0 to 7	Reservation	—	—	0

SW No.	Bit	Functions	0	1	Default
SW 05	0	Modem redial interval	*2	*2	1
	1		*2	*2	1
	2		*2	*2	0
	3		*2	*2	0
	4 to 7	Reservation	—	—	0
SW 06	0	Modem redial times	*3	*3	0
	1		*3	*3	1
	2		*3	*3	0
	3		*3	*3	1
	4		*3	*3	0
	5		*3	*3	0
	6		*3	*3	0
	7	Reservation	—	—	0
SW 07	0	Redial for response time out	Do not redial	Redial	1
	1 to 7	Reserved	—	—	0
SW 08	0	Retransmission interval on e-mail delivery error	*4	*4	0
	1		*4	*4	1
	2		*4	*4	1
	3		*4	*4	0
	4 to 7	Reservation	—	—	0
SW 09	0	Retransmission times on e-mail delivery error	*5	*5	0
	1		*5	*5	1
	2		*5	*5	0
	3		*5	*5	1
	4		*5	*5	0
	5		*5	*5	0
	6		*5	*5	0
	7	Reservation	—	—	0
SW 10	0 to 7	Reservation	—	—	0
SW 11	0	Timer 1 RING reception → CONNECT reception	*6	*6	0
	1		*6	*6	0
	2		*6	*6	0
	3		*6	*6	0
	4		*6	*6	0
	5		*6	*6	1
	6		*6	*6	0
	7		*6	*6	0

SW No.	Bit	Functions	0	1	Default
SW 12	0	Timer 2 Dial request completed → CONNECT reception	*7	*7	0
	1		*7	*7	0
	2		*7	*7	0
	3		*7	*7	0
	4		*7	*7	0
	5		*7	*7	0
	6		*7	*7	1
	7		*7	*7	0
SW 13	0 to 7	Reservation	—	—	0
SW 14	0	Timer 4 Line connection → Start request telegram delivery	*8	*8	0
	1		*8	*8	0
	2		*8	*8	0
	3		*8	*8	0
	4		*8	*8	0
	5		*8	*8	1
	6		*8	*8	0
	7		*8	*8	0
SW 15	0	Timer 5 Wait time for other side's response	*9	*9	0
	1		*9	*9	1
	2		*9	*9	1
	3		*9	*9	1
	4		*9	*9	1
	5		*9	*9	0
	6		*9	*9	0
	7		*9	*9	0
SW 16	0 to 7	Reservation	—	—	0
SW 17	0 to 7	Reservation	—	—	0
SW 18	0	Attention display To set weather to give the alarm display when using the modem but the power for the modem is OFF.	Do not call	Call	1
	1 to 7	Reservation	—	—	0
SW 19 to SW 40	0 to 7	Reservation	—	—	0

*1: Baud rate

Mode	01-7	01-6	01-5	01-4
9600 bps	0	1	1	0
19200 bps	0	1	1	1
“38400 bps”	1	0	0	0

*2: Modem redial interval

Mode	05-3	05-2	05-1	05-0
1 minute	0	0	0	1
2 minutes	0	0	1	0
“3 minutes”	0	0	1	1
4 minutes	0	1	0	0
5 minutes	0	1	0	1
6 minutes	0	1	1	0
7 minutes	0	1	1	1
8 minutes	1	0	0	0
9 minutes	1	0	0	1
10 minutes	1	0	1	0

*3: Modem redial times

Mode	06-6	06-5	06-4	06-3	06-2	06-1	06-0
0 to 9 times	000 0000 to 000 1001						
“10 times”	0	0	0	1	0	1	0
11 to 99 times	000 1011 to 110 0011						

*4: Retransmission interval on e-mail delivery error

Mode	08-3	08-2	08-1	08-0
0 minute	0	0	0	0
10 minutes	0	0	0	1
20 minutes	0	0	1	0
30 minutes	0	0	1	1
40 minutes	0	1	0	0
50 minutes	0	1	0	1
“60 minutes”	0	1	1	0
70 minutes	0	1	1	1
80 minutes	1	0	0	0
90 minutes	1	0	0	1
100 minutes	1	0	1	0
110 minutes	1	0	1	1
120 minutes	1	1	0	0

*5: Retransmission times on e-mail delivery error

Mode	09-6	09-5	09-4	09-3	09-2	09-1	09-0
0 to 9 times	000 0000 to 000 1001						
“10 times”	0	0	0	1	0	1	0
11 to 99 times	000 1011 to 110 0011						

*6: Timer 1 (RING reception → CONNECT reception)

Mode	11-7	11-6	11-5	11-4	11-3	11-2	11-1	11-0
0 to 31 sec	0000 0000 to 0001 1111							
“32 sec”	0	0	1	0	0	0	0	0
33 to 255 sec	0010 0001 to 1111 1111							

*7: Timer 2 (Dial request completed → CONNECT reception)

Mode	12-7	12-6	12-5	12-4	12-3	12-2	12-1	12-0
0 to 63 sec	0000 0000 to 0011 1111							
“64 sec”	0	1	0	0	0	0	0	0
65 to 255 sec	0100 0001 to 1111 1111							

*8: Timer 4 (Line connection → Start request telegram delivery)

Mode	14-7	14-6	14-5	14-4	14-3	14-2	14-1	14-0
0 to 31 (x 100 msec)	0000 0000 to 0001 1111							
“32 (x 100 msec)”	0	0	1	0	0	0	0	0
33 to 255 (x 100 msec)	0010 0001 to 1111 1111							

*9: Timer 5 (Wait time for other side’s response)

Mode	15-7	15-6	15-5	15-4	15-3	15-2	15-1	15-0
0 to 29 sec	0000 0000 to 0001 1101							
“30 sec”	0	0	0	1	1	1	1	0
31 to 255 sec	0001 1111 to 1111 1111							

16.8.4 Setup confirmation

- **Follow the steps below to make sure that CS Remote Care has been properly set up.**

1. Call the Service Mode to the screen.
2. Click [CS Remote Care].
3. Check to make sure that only selected item is displayed.

16.8.5 Calling the maintenance

- When CE starts maintenance, inputting the ID code of CE (seven digits: numbers which CE can identify. They are controlled by the distributor.) will transmit the information to the Center side and tells that the maintenance has started. When the maintenance is finished, clicking [Maintenance Complete] key will transmit the information to the center and tells that it is finished.

A. When starting the maintenance

1. Select Service Mode and click [CS Remote Care].
2. Click [ID Code], and input ID Code.
3. Click [ID Coke].

* The Start key blinks while maintenance is being carried out.

B. When finishing the maintenance

1. Select Service Mode and click [CS Remote Care].
2. Click [Maintenance Complete].

16.8.6 Calling the center from the administrator

- When the CS Remote Care setup is complete, the administrator can call the CS Remote Care center.

1. Select [Admin. Settings], and click [System Connection].
2. Click [Admin. transmission].
3. Click the Start key.
   When the setup is not complete or another transmission is being carried out, the Admin. transmission key will not be displayed, and the transmission is not available.

NOTE

- **For transmitting data of the machine by calling the center on the specified date and time, refer to the manual for CS Remote Care center.**

16.8.7 Checking the transmission log

- The transmission log list will be output to be checked.

1. Select [Service Mode] → [CS Remote Care], and click [Detail setting].
2. Click [Communication Log Print].
3. Load tray 1 or bypass tray with A4S paper.
4. Click the Start key to output transmission log.

16.8.8 Detail on settings

A. System Selection

Functions	• To select the system type for remote diagnosis.
Use	• Use to newly build or change the system.
Setting/ Procedure	• Select E-Mail, Modem. E-Mail Modem Fax

B. ID Code

Functions	• To register the service ID.
Use	• Use when registering and changing service ID.
Setting/ Procedure	• Enter a 7-digit code from the 10-key pad. (0000001 to 9999999) <Registration> • Click ID code and enter the service ID. • Click [ID code] to register the ID. • The [Detail Setting] will appear when the ID has been registered.

C. Detail Setting

(1) Basic Setting

Functions	• Execute the primary setting.
Use	• Use to change the set contents. • Use to register the machine to the CS Remote Care center.
Setting/ Procedure	*1.* Call the Service Mode to the screen. *2.* Click [CS Remote Care]. *3.* Clicking the [Detail Setting] will display the primary setting. <Center Setting> • Set the center ID, Device ID, and the phone No. • When e-mail is selected for system and all setup procedures are completed, e-mail address of the center is displayed. * When entering the phone number, 10-keys and keys on the screen have following meanings. [-] Pose : Waits to start transmitting after dialing [W] Wait : Detects the dial tone of the other end [T] Tone dial : Carry out tone dialing [P] Pulse dial : Carry out pulse dialing [*], [#] : To be used as necessary <Schedule (Only when the [E-Mail2] is selected)> • Set the schedule of notification to the center. • Up to three different notification schedules can be registered. • Select the notification cycle from [Day], [Week], or [Month]. When selecting [Day] for the notification cycle, set the Day Frequency. When selecting [Week] for the notification cycle, set the Week Frequency and day of the week. When selecting [Month], set the Month Frequency and the date of the month. <Center Notification (Only when the [E-Mail2] is selected)> • Select the items of data that will be sent to the center in one-way transmission through E-Mail2. • The following table shows each of the notification item keys and corresponding data.

[1]	Sales count data	[7]	EKC data
[2]	Error count data	[8]	Adjustment data
[3]	Service count data	[9]	Coverage data
[4]	Life count data Life cycle data	[10]	Not used
[5]	CSRC-System data Device config data	[11]	Not used
[6]	History data	[12]	Not used

NOTE

• **Multiple items of data can be selected and sent at one time. However, be sure that only EKC data cannot be sent together with other items of data.**

Initial Transmission

• Clicking the Initial Transmission key will sent the information to the CS Remote Care center to register the machine.
(Only when the modem is selected on the system Input.)

(2) Date & Time Setting

Functions	• To set the data and time-of-day.
Use	• Use to set or change the date and time-of-day.
Setting/ Procedure	*1.* Call the Service Mode to the screen. *2.* Click [CS Remote Care]. *3.* Click [Detail Setting] to access Date & Time Setting. *4.* Enter the date (month, day and year), time-of-day, and the time zone from the 10-key pad. *5.* Click [SET] to start the clock.

(3) RAM Clear

Functions	• To clear the following data at the center ID Code, Primary Setting, Date/Time Input (Time Zone), Software SW Setting and AT Command.
Use	• To be used for setting CS Remote Care. • To be used for reset the every data of the center to default. **NOTE** • **If RAM clear is selected during transmission, RAM clear processing will be implemented at the time the transmission is completed regardless of whether it is done properly or not.**
Setting/ Procedure	• The default setting is “Unset.” Set “Unset”

(4) Communication Log Print

Functions	• To print out the communication log.
Use	• Use to output and use the communication log.
Setting/ Procedure	*1.* Call the Service Mode on the screen. *2.* Click [CS Remote Care]. *3.* Click [Detail Setting] to access communication log print. *4.* Load tray 1 or bypass tray with A4S or $8^1/_2$ x 11 paper. *5.* Click Start key to print out the communication log.

(5) Software Switch Setting

Functions	• To change the CS Remote Care settings.
Use	• To change the settings for CS Remote Care as necessary.
Setting/ Procedure	• Refer to “Software SW setting for CS Remote Care” for the setting. See P.325

(6) Response Time Out

Functions	• It sets the intervals for resending e-mails when transmission error occurred. • It can be set only when [E-Mail] is selected by System Setting.
Use	• To use when changing the intervals for resending e-mails when transmission error occurred.
Setting/ Procedure	• The default setting is 60 minute. “60 minute” (10 to 1440)

D. AT Command

Functions	• To set the command to be issued at the time of modem initialization. • This setting is available only when [Modem] is selected for the system setting.
Use	• To set the command to be issued at the time of modem initialization.
Setting/ Procedure	• Enter the command and click [SET] to register.

E. Server Setting

• Server Setting can be set only when [E-Mail] is selected by System Setting.

(1) Server for RX

<POP3 server>

Functions	• To set the POP3 server address used for the CS Remote Care.
Use	• To set the address of the POP3 Server. • POP3 server address can be set with IP address or the domain name.
Setting/ Procedure	<Input IP Address> • IP address version 4 format [0 to 255].[0 to 255].[0 to 255].[0 to 255] <Input FQDN> • Enter the domain name.

<POP3 login name>

Functions	• To set the logon name for the POP3 server used for the CS Remote Care.
Use	• To set the logon name for the POP3 server.
Setting/ Procedure	• The default setting is No. • Up to 64 characters (alphanumeric characters and symbols) can be used.

<POP3 password>

Functions	• To set the logon password for the POP3 server used for the CS Remote Care.
Use	• To set the logon password for the POP3 server.
Setting/ Procedure	• The default setting is No. • Up to 15 characters (alphanumeric characters and symbols) can be used.

<POP3 port number>

Functions	• To set the POP3 port number used for the CS Remote Care.
Use	• To set the port number for the POP3 server.
Setting/ Procedure	• The default setting is 110. "110" (1 to 65535)

(2) Receive

<E-mail Address>

Functions	• To set the e-mail address used for the CS Remote Care.
Use	• To set the e-mail address.
Setting/ Procedure	• The default setting is No. • Up to 129 characters (alphanumeric characters and symbols) can be used.

<Mail Check>

Functions	• To set whether or not to use mail check and the time interval for the POP server used for the CS Remote Care.
Use	• To set whether or not to use mail check and the time interval for the POP server used for the CS Remote Care. • To change the time interval for mail check.
Setting/ Procedure	• The default setting is No. "No" (1 to120 min., No)

<Connection timeout>

Functions	• To set the timeout period for connection during reception.
Use	• To change the timeout period for connection during reception.
Setting/ Procedure	• The default setting is 60 Sec. "60 Sec" (30 to 300 Sec)

<APOP Authentication>

Functions	• To set whether or not to authenticate the APOP during reception.
Use	• To authenticate the APOP during reception.
Setting/ Procedure	• The default setting is No. Yes "No"

(3) Send

<SMTP server>

Functions	• To set the SMTP sever address for transmission used for the CS Remote Care.
Use	• To set the SMTP server address. • SMTP server address can be set by the IP address or the domain name.
Setting/ Procedure	<Input IP Address> • IP address version 4 format [0 to 255].[0 to 255].[0 to 255].[0 to 255] <Input FQDN> • Enter the domain name.

<SMTP port number>

Functions	• To set the SMTP port number for transmission used for the CS Remote Care.
Use	• To set the Port Number of the SMTP Server.
Setting/ Procedure	• The default setting is 25. "25" (1 to 65535)

<SMTP Connection Time-out>

Functions	• To set the timeout period for transmission.
Use	• To change the timeout period for connection during transmission.
Setting/ Procedure	• The default setting is 60 Sec. "60 Sec" (30 to 300 Sec)

<Authentication Setting>

Functions	• To set whether or not to authenticate during transmission via SMTP server.
Use	• To use when authenticating during transmission. Available authentication mode: POP Before SMTP, SMTP authentication
Setting/ Procedure	• The default setting is OFF. "OFF" POP Before SMTP SMTP Authentication * Setting to "POP Before SMTP" will set the time for POP Before SMTP. • The default setting is 60 Sec. "60 Sec" (0 to 60 Sec) * When setting to SMTP authentication, click the "Setting Check" key for authentication. User ID : Enter the user ID for SMTP authentication. Password : Enter the password for SMTP authentication. Domain name : Enter the domain name for SMTP authentication.

(4) TX/RX Test

Functions	• To determine the correct transmission and reception using CS Remote Care.
Use	• Use to determine the correct transmission and reception using CS Remote Care.
Setting/ Procedure	• Click the Start key to let the machine start the transmission and reception test. • The test procedure and result will be displayed on the screen.

(5) Data Initialization

Functions	• To initialize the contents for the sever setting.
Use	• Use to initialize the contents for the server setting.
Setting/ Procedure	• The default setting is No. Yes "No"

16.8.9 List of the CS Remote Care error code

A. When connecting by modem

Error code	Error	Solution
0001	The line is busy (Busy detection)	• Transmit again manually.
0002	Failure of the Modem default setting at transmitting (When the transmission completes with modem initial setting failed)	• Check if the power of the modem is ON. • Check the connecting condition between the modem and the main body.
0003	Timeout of CONNECT at transmitting (No response to ATD)	• Transmit again manually • Check if the power of the modem is ON. • Check the connecting condition between the modem and the main body.
0005	Timeout of CONNECT at receiving (No response to ATA)	• Check if the power of the modem is ON. • Check the connecting condition between the modem and the main body.
0006	Shut down of the data modem line (Host) (Carrier OFF is detected)	• No solution, because the line is shut down at the host side.
0008	Timeout of start request telegram delivery (Start request telegram is not delivered after line connection)	• Transmit again manually.
0009	Timeout of finish request telegram delivery (Finish request telegram is not delivered (Start of shut down).)	• Transmit again manually.
000A	Receiving rejection (Receiving is made when the main body is set to reject receiving.)	• Check the setting condition of the host side. • Check the setting condition of the main body side.
000B	RS232C driver over run (When the modem detects over run.)	• If the same error is detected several times, turn the modem power OFF and ON.
000C	If the same error is detected several times, turn the modem power OFF and ON.	• If the same error is detected several times, turn the modem power OFF and ON.
000D	Break Interrupt (BI) indicator (When the modem detects Break Interrupt (BI) indicator.)	• If the same error is detected several times, turn the modem power OFF and ON.
0011	Baud rate ERROR (When selected baud rate is out of the specification (9600 bps to 38400 bps).)	• Check the baud rate of the software DipSW.
0018	Machine ID has already been registered (Request telegram 2 (SET-UP) comes from the main body that has already registered machine ID.)	• Set the initial registrations again for all including the host side.
0019	Center ID error (Center ID of the host is not identical with the one of start request telegram.)	• Check center ID setting of the main body side. • Check center ID setting of the main body side.

Error code	Error	Solution
001A	Device ID inconsistency (Device ID of the host is not identical with the one of start request telegram.)	• Check device ID setting of the main body side. • Check the setting of the host side.
001B	Device ID unregistered (Request telegram 2 (Constant data transmitting, emergency call) comes from the main body that has not registered machine ID yet.)	• Check device ID setting of the main body side. • Check the setting of the host side.
001E	Impossible to change (during printing) (Setting cannot be changed because the setting change is made during the machine is printing or starts printing.)	• Try again when the machine is not printing.
0020	Timeout of telegram delivery (At waiting mode of telegram delivery the machine fails to receive the telegram in a given time.)	• Try communication again.
0027	Transmission / receiving collision (Receiving is detecting during transmitting processing)	• Try communication again.

NOTE

- **When a code other than the ones listed above is displayed, contact KMBT and inform the error code.**

B. When connecting by e-mails

Error code	Error	Solution
0001	Connection timeout during transmission	• Check the SMTP server on User side.
0###	Transmission error ***: SMTP responding code (hexadecimal)	• Check the SMTP server on User side.
0003	Connection timeout when receiving	• Check the POP3 server on User side.
0005	Receiving error	• Check the POP3 server on User side.
1030	Machine ID mismatching • Received an e-mail which tells that machine ID mismatches.	• Check the machine ID setting. • Check the machine ID setting on host side.
1062	Modifying not available due to the print job currently performing • When informing the host that it cannot be modified due to the print job currently performing.	• Ask the host to send another instruction mail for modifying.
1081	Frame No. error • The last frame has not been received. • There are missing frame No.	• Check the status of the machine registration on host side.
1084	Date expired • Expiration date for data modification command has passed.	• Ask the host to send another instruction mail for modifying.
1092	Received an error mail when center setup is not complete	• Check the status of the machine registration on host side.
2039	Socket is not connected. • LAN cable on the printer side is detached.	• Check the SMTP server and POP3 server on user side.
203E	Network is down. • LAN cable on the printer side is detached.	• Check the connection between the printer on the user's side and the network connector. • Check the network environment on the user's side.
3000	POP3_AUTHORIZATION_ERR	• Check the POP3 server environment on user's side.
3001	POP3_TRANSACTION_ERR	• Check the POP3 server environment on user's side.
3002	POP3_CONNECT_ERR	• Check the POP3 server environment on user's side.
3003	POP3_TIMEOUT_ERR	• Check the POP3 server environment on user's side.
3004	POP3_FORMAT_ERR	• Check the POP3 server environment on user's side.
3005	POP3_MEMORY_ERR	• Check the POP3 server environment on user's side.
3006	POP3_JOBID_ERR	• Check the POP3 server environment on user's side.
3007	POP3_NO_DATA_ERR	• Check the POP3 server environment on user's side.

Error code	Error	Solution
3008	POP3_DELETE_FAIL_ERR	• Check the POP3 server environment on user's side.
3009	POP3_MAILBOX_FULL	• Check the POP3 server environment on user's side.
4103	Not ready • Tried to transmit or receive an e-mail when the machine was not yet in the e-mail receiving status after power was turned ON.	• Wait for a while and try transmitting again.
4104	SMTP channel not ready	• Wait for a while and try transmitting again.
4105	POP3 channel not ready	• Wait for a while and try transmitting again.
4106	Not Ready other than the ones listed above.	• Wait for a while and try transmitting again.

NOTE

- **When a code other than the ones listed above is displayed, contact KMBT and inform the error code.**

16.8.10 Troubleshooting for CS Remote Care

If communication is not done properly, check the condition by following the procedures shown below.

1. Shift the screen in the order of [Service Mode] → [CS Remote Care] → [Detail Setting]. At this time, in the cases of initial transmitting / administrator transmitting / maintenance start transmitting / maintenance finish transmitting, the communication result will be displayed at the top of the screen.

* For the communication result, the following message will be displayed based on its success or failure.

Display of communication result	Cause	Solution
Communicating	—	—
Communication trouble with the center	Although the machine tries to communicate with the center, there is any trouble and the communication completes unsuccessfully.	• See the list of error message and confirm the corresponding point. See P.337
Complete successfully	—	—
Modem trouble	Although the machine tries to communicate with the center, there is any trouble in the modem.	• Check if the power of modem in ON. • Check if there is any problem in connection between the modem and the main body.
Busy line	Although the machine tries to communicate with the center, the line to the center is busy.	• Communicate with the center again.
No response	Although the machine tries to communicate with the center, there is no response from the center.	• Communicate with the center again. • Check the communication environment of the center side.

16.9 System 1

16.9.1 Marketing Area

Functions	• To make the various settings (language, paper size, fixed zoom ratios, etc.) according to the applicable marketing area.
Use	• Upon setup.
Setting/ Procedure	<Marketing Area> • Select the applicable marketing area and click [END] to set the marketing area. Japan US Europe Others1 Others2 Others3 Others4 ✻ These are the languages that can be selected on the Utility screen according to different marketing area settings:

Japan	English, French, German, Italian, Spanish, Dutch, Portuguese, Czech, Japanese
US	
Europe	
Others1	
Others2	
Others3	
Others4	

16.9.2 Serial Number

Functions	• To register the serial numbers of the machine and options. • The numbers will be printed on the list output. • To use the serial number as Machine ID during CS Remote Care communication.
Use	• Upon setup. **NOTE** **• When power switch was turned ON while the serial No. was not entered, the message to require entering the serial No. will be displayed.** **• Do not change the serial number registered in the machine. If memory data is lost and entering the serial number is required, enter the original correct serial number.** **Be careful to enter the correct serial number since characters other than alphanumeric can be also entered. CSRC communication is not available if a wrong serial number is entered.**
Setting/ Procedure	• Type the serial numbers. Printer, LCT, Sorter/FN, Duplex

16.9.3 No Sleep

Functions	• To display the option of “OFF” for the sleep mode setting screen available from admin. settings.
Use	• To display the option of “OFF” for the sleep mode setting. **NOTE** **• The sleep mode will begin in 48 hours even if it sets it to “OFF.”**
Setting/ Procedure	• The default setting is “Prohibit.” Permit “Prohibit”

16.9.4 Foolscap Size Setting

Functions	• To set the size for foolscap paper.
Use	• Upon setup. • To change the size for foolscap paper.
Setting/ Procedure	• Select the size from among the following five. 220 x 330 mm $8^1/_2$ x 13 $8^1/_4$ x 13 $8^1/_8$ x $13^1/_4$ 8 x 13

16.9.5 Install Date

Functions	• To register the date the main body was installed.
Use	• Upon setup.
Setting/ Procedure	*1.* Call the Service Mode on the screen. *2.* Select the key as follows. [System 1] → [Install Date]. *3.* Enter the date (Year 4 digit → Month 2 digit → date 2 digit) from the 10-key pad. *4.* Click [Entry] to set the date of installation.

16.9.6 Initialization

A. Data Clear

Functions	• To initialize the setting data.
Use	• To clears the setting data. For details on items to be cleared, see “Contents to be cleared by reset function.” See P.388 **NOTE** • **When removing or installing the hard disk after registering the data below, be sure to clear the data.** **Referring data: One-touch registration, user authentication/account track.**
Setting/ Procedure	*1.* Call the Service Mode to the screen. *2.* Select the key as follows. [System 1] → [Initialization] → [Data clear]. *3.* Click the Start key. *4.* When [OK] is displayed, turn off the power switch and turn it on again more than 10 seconds after.

B. System Error Clear

Functions	• To reset the trouble data.
Use	• Use to clear the [Jam], [Trouble], [Error] displays, and other improper displays. For details on items to be cleared, see “Contents to be cleared by reset function.” See P.388
Setting/ Procedure	*1.* Call the Service Mode to the screen. *2.* Select the key as follows. [System 1] → [Initialization] → [System Error Clear]. *3.* Click the Start key. *4.* When [OK] is displayed, turn off the power switch and turn it on again more than 10 seconds after.

16.9.7 Trouble Isolation

Functions	• Individual units and options have a set or unset setting for the trouble isolation function.
Use	• When a problem occurs, this function enables the continuous use of the units that are not affected by separately controlling them and isolating other units that have a problem. • The machine isolates only units that have a “set” setting. **NOTE** • **The malfunction detection mechanism is not applied to units and options that are being isolated.** • This function can be selected for the following units and options. Tray 1, Tray 2, Tray 3, LCT, manual, Half-Fold/Tri-Fold Center Stapling and Staple.
Setting/ Procedure	• The default setting is Unset for individual units and options. Set “Unset” • After changing the setting, click [Decision] and turn the power switch OFF and ON to make the new setting effective.

16.9.8 IU Life Setting

Functions	• To set the life threshold for imaging units.
Use	• Use this setting when a gap appears between the actual life value of imaging unit and the life specification value due to the way * a machine is used. • Comparing the PC drum rotation time with the PC drum rotation time calculated based on the number of printed pages, the machine detects the end of unit life using the one that reaches the life specification value earlier. This setting aims to extend the life threshold for the PC drum rotation time and achieve a longer imaging unit life. Normal : detects the end of life when the life specification value is reached. Suspend: detects the end of life when a value greater (longer) than the life specification value is reached. *The product specification value is determined based on what types of printing are made on the machine. If the types of printing made on the machine are different from the specified printing conditions, the life value of the imaging unit tends to be different from the life specification value. See conditions for life specification values in the service manual titled maintenance for more information on printing conditions. See P.18 **NOTE** • **When “Suspend” is selected, images printed after the life specification value is out of guarantee.** **The life counter value of imaging unit is accessed from [Service Mode] → [Counter] → [Life].** • **Before making this setting, be sure to check that the machine does not display any message that warns each of imaging units, fusing unit, or image transfer belt unit reaches their life value.**
Setting/ Procedure	• The default setting is Normal. “Normal” Suspend

16.9.9 Change Warm Up Time

Functions	• To change the warm up time.
Use	• With the warm-up time set to mode 1, if monochrome printing is made immediately after a warm-up cycle and a paper curl problem occurs, change the setting to mode2. • With the use of recycled or low quality paper, if a paper curl problem or other paper curl related failures occur immediately after a normal warm-up cycle, set the setting to mode 3 or mode 4. Other paper curl related failures include jam, paper ejection failure, and punch/staple/fold position failure. The following table shows the warm-up time (normal warm-up) in each mode.

Mode 1	Monochrome: 75 sec./Color: 75 sec.
Mode 2	
Mode 3	
Mode 4	Monochrome: 130 sec./Color: 130 sec.

Setting/ Procedure	• The default setting is Mode 1. "Mode 1" Mode 2 Mode 3 Mode 4

16.9.10 Machine State LED Setting

Functions	• To set how to display main body statuses on the machine state LED (state display lamp, paper empty lamp).
Use	• Each of Type1 and Type2 has the following LED display forms.

Machine State LED Setting		Type1	Type2
Amount of paper remaining (Tray 1 and 2)	100 % to 66 % of paper remaining	Unlit	Unlit
	Near empty	Blinking	Unlit
	Empty	Lit	Lit
	Being lifted up Door opened or closed	Unlit	Unlit
Amount of paper remaining (Tray 3 and 4, LCT)	100 % to 33 % paper remaining	Unlit	Unlit
	33 % to near empty	Blinking	Unlit
	Near empty	Blinking	Unlit
	Empty	Lit	Lit
	Being lifted up Door opened or closed	Unlit	Unlit

Setting/ Procedure	• Each default setting is Type1. "Type 1" Type 2 **NOTE** • **[Type 2] is the default setting, if the firmware of function enhanced version 1 or later is mounted.**

16.10 System 2

16.10.1 HDD

Functions	• To configure the printer as necessary when a hard disk to mounted.
Use	• Use when the hard disk is mounted.
Setting/ Procedure	• The default settings are “Not Installed.” Installed “Not Installed” **NOTE** • **When the setting has been changed, turn off the power switch and turn it on again more than 10 seconds after.**

16.10.2 Image Controller Setting

Functions	• To set the type of the controller. • [Peripheral Mode] appears when [Others] is selected.
Use	• When setting up the controller.
Setting/ Procedure	Image Controller Setting • Select the controller to be used. “Controller 0” : The standard controller is used. Controller 1 : undefined. Controller 2 : undefined. Controller 3 : undefined. Others : undefined. Peripheral Mode * This setting is available when the Select controller setting is set to “Others.” Mode 1: undefined. Mode 2: undefined. Mode 3: undefined. **NOTE** • **When the following setting is “ON”, this setting should be set to “Controller 0”.** **[Admin. Settings] → [Security Settings] → [EnhancedSecurity] When [EnhancedSecurity] is set to “ON”, this setting cannot be changed.** • **After changing setting, make sure to turn off the power switch and turn it on again more than 10 seconds after.**

16.10.3 Consumable Life Reminder

Functions	• To select whether or not to give the display of PM parts lifetime PM parts lifetime display: An entire screen warning is given when the service life of a specific unit has been reached, prompting the user to replace the part. • Applicable units: Transfer belt unit, fusing unit, imaging unit (C, M, Y, K)
Use	• Use to select not to give the display of PM parts lifetime.
Setting/ Procedure	• The default setting is “Yes.” “Yes” No

16.10.4 Unit Change

Functions	• To select who is to replace a unit. • When the unit life arrives, the warning display is intended for the specific person who is going to replace the unit. When "User" is selected : Printing is inhibited. When "Service" is selected: Life warning.
Use	• Upon setup
Setting/ Procedure	<Unit Change> • The following are the default settings: US, Japan, Others 4 / Europe, Others1/2/3 Toner Cartridge : "User" Service / "User" Service Imaging Unit : User "Service" / "User" Service Waste Toner Box : User "Service" / "User" Service Punch Dust Box : User "Service" / "User" Service <Warning Display> Toner Near Empty : "Yes" / No

16.10.5 Software Switch Setting

Functions Use	• To set the operating characteristic of each function from software switch depending on what types of printing are normally made.
Setting/ Procedure	*1.* Click [Software Switch Setting]. *2.* Click [Switch No.] and enter the intended switch number with the ten-key pad. *3.* Click [Bit Assignment]. *4.* Use [←] or [→] to select a bit. To set the bit, enter 0 or 1 with the ten-key pad. *5.* To set the bit in hex, click [HEX Assignment] and use the ten-key pad and [A] to [F] keys to enter numbers and characters. *6.* Click [Fix].

A. Setting items in the software switch setting

(1) ACS mode control change

Functions	• To change the 1st image transfer roller pressure/retraction operation control in ACS mode.
Use	• When a user makes mainly monochrome prints, selecting 01 may allow avoiding the PC drum wear-out caused by unnecessary rotation of color imaging units. HEX Assignment 00: The color print (pressed) position is set as the default position of the 1st image transfer roller. (Default setting) HEX Assignment 01: The monochrome print (retracted) position is set as the default position of the 1st image transfer roller.
Setting/ Procedure	*1.* Click [Software Switch Setting]. *2.* Click [Switch No.] and enter "50" with the ten-key pad. *3.* Click [HEX Assignment] and enter "00" or "01" with the ten-key pad. *4.* Click [Fix].

16.10.6 LCT Paper Size Setting

Functions	• To set the paper size for the LCT.
Use	• Use to change the paper size for the LCT (PC-405).
Setting/ Procedure	• The default setting depends on the setting made for the applicable marketing area. A4 $8^{1}/_{2}$ x 11

16.10.7 Data Capture

Functions	• When an error occurs, it acquires the print job data in order to analyze the cause of the error.
Use	• When an error occurs, this will be used to analyze the cause of the error according to the print job data.
Setting/ Procedure	**NOTE** • **The following conditions are necessary for this function.** **When selecting [Security Settings] → [Security Details] → [PrintDataCapture] in Admin. Settings, [Allow] must be set.** **The hard disk must be mounted to the machine.** **When selecting [Admin. Settings] → [Network Settings] → [FTP Settings], [FTP Server Settings: ON] must be set.** *1.* Select [Service Mode] → [System 2], and click [Data Capture]. Select [ON]. (While the Data Capture setting is [ON], the print job data from the PC will be stored in the hard disk.) **NOTE** • **The original offset value can be disabled to address image failure and other problems caused by individual CCD performance difference.** *2.* Check the IP address of the machine. *3.* Connect the PC (Windows) and the machine with ethernet cable. *4.* Start the DOS command prompt of the PC, and specify the IP address of the machine to start FTP. 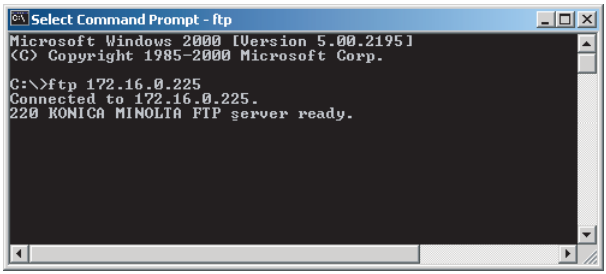 4037F3E538DA *5.* Input the user name and the password. User name: capture Password: sysadm 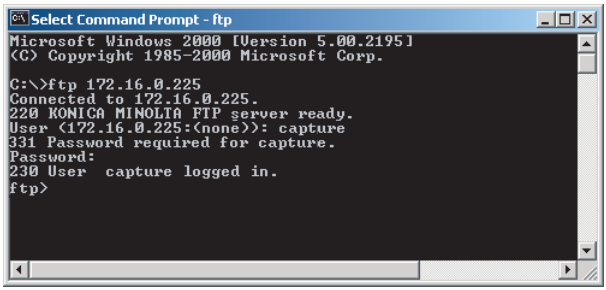 4037F3E539DA

Setting/ Procedure	*6.* Using the “ls” command, display the list of the file available for capture.

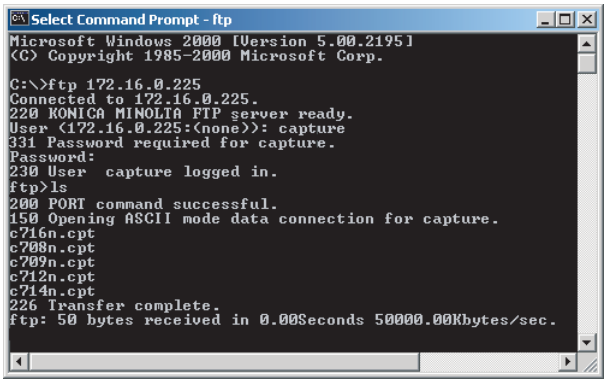

4037F3E540DA

7. Using the “binary” command, set the File transfer mode to the binary transfer.

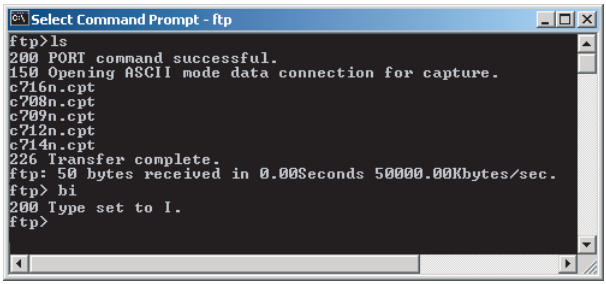

4037F3E541DA

Setting/ Procedure	*8.* Using the “get” command, transfer the data for capture to PC. 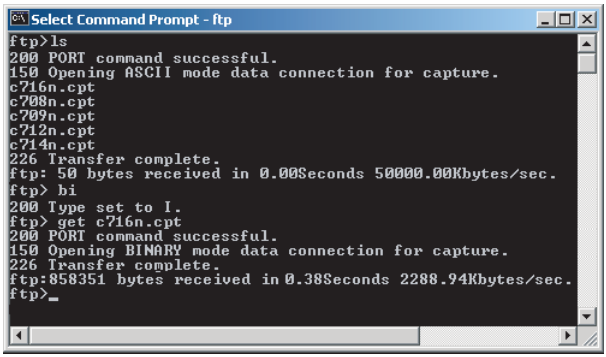 4037F3E542DA *9.* Finish the command prompt. **NOTE** • **After receiving capture data, select [Admin. Settings] → [Security Settings] → [Security Details], and select [Restrict] for print data capture in order to delete the job data stored in the hard disk.** **When HDD Format or Overwrite Temporary Data is performed, job data is deleted.**

16.11 Counter

- The counter displays the counts of various counters to allow the technical representative to check or set as necessary.

16.11.1 Procedure

1. Click [Counter] to show the counter menu.
2. Select the specific counter to be displayed.
3. To clear the counts of two or more counters within a group or across different groups at once, click [Counter Reset], select the specific counters to be cleared, and click [END]. Two or more counters can be selected.

16.11.2 Life

Functions	• To check the number of hours or times each of the different maintenance parts has been used. • To clear the count of each counter.
Use	• When each of the maintenance parts is replaced.
Setting/ Procedure	• To clear the count of a counter, select the specific part and click the Clear key. • If a counter is cleared mistakenly, click the Interrupt key, which will undo the clearing operation. • It is not possible to clear the count of the counters for the fusing unit, transfer belt unit, Imaging Unit and TCR new article detection, which are provided with a new unit detection function. <1> • Fusing Unit : Number of times a sheet of paper is fed through • Image Transfer Belt Unit : Number of times a sheet of paper is fed through • 1st. : Number of sheets of paper fed from tray 1 • 2nd. : Number of sheets of paper fed from tray 2 • 3rd. : Number of sheets of paper fed from tray 3 • 4th. : Number of sheets of paper fed from tray 4 • Manual Tray : Number of sheets of paper fed from the bypass
	<2> • Imaging Unit (C) : Period of time over which the cyan imaging unit has been used. • Imaging Unit (M) : Period of time over which the magenta imaging unit has been used. • Imaging Unit (Y) : Period of time over which the yellow imaging unit has been used. • Imaging Unit (K) : Period of time over which the black imaging unit has been used. • LCT Parts : Number of sheets of paper fed from the LCT • ADF Feed : Not used • ADF Reverse : Not used • Sorter/Finisher : Number of sheets of paper fed out of the sorter/finisher
Setting/ Procedure	<3> • TCR new article detection (C) : Period of time over which the cyan toner cartridge has been used. • TCR new article detection (M) : Period of time over which the magenta toner cartridge has been used. • TCR new article detection (Y) : Period of time over which the yellow toner cartridge has been used. • TCR new article detection (K) : Period of time over which the black toner cartridge has been used.

16.11.3 Jam

Functions	• To check the number of misfeeds that have occurred at different locations in the machine. • To clear the count of each counter.
Use	• To check the number of paper misfeeds that have occurred.
Setting/ Procedure	• To clear the count of a counter, select the specific part and click the Clear key. • If a counter is cleared mistakenly, click the Interrupt key, which will undo the clearing operation.

16.11.4 Service Call Counter

Functions	• To check the number of malfunctions that have occurred at different locations in the machine. • To clear the count of each counter.
Use	• To check the number of malfunctions that have occurred.
Setting/ Procedure	• To clear the count of a counter, select the specific part and click the Clear key. • If a counter is cleared mistakenly, click the Interrupt key, which will undo the clearing operation.

16.11.5 Warning

Functions	• To check the number of warning conditions detected according to the warming type • To clear the count of each counter.
Use	• To check the number of warning conditions that have been detected.
Setting/ Procedure	• To clear the count of a counter, select the specific part and click the Clear key. • If a counter is cleared mistakenly, click the Interrupt key, which will undo the clearing operation. • When a warning condition occurs, an warning code appears at the basic screen.

16.11.6 Maintenance

Functions	• To set a count value for maintenance of any given part.
Use	• When any given part is replaced.
Setting/ Procedure	Maint.-Set • Enter the maintenance counter value from the 10-key pad. • The default setting is “0.” 0 to 999999 Maint.-Count • Counts up when a sheet of paper is fed through the machine. • A warning message is given when the count reaches the preset value. • Clicking the Clear key will clear the count. • If the count is cleared mistakenly, click the Interrupt key, which will undo the clearing operation.

16.11.7 Service Total

A. Total

Functions	• To display the count value for the service total counter.
Use	• Use to check the total No. of printed pages including the ones printed by the Service Mode.
Setting/ Procedure	Service Total : No. of pages printed by user mode and Service Mode. Service Total (Duplex) : No. of pages printed by user mode and Service Mode in duplex.

B. Paper Size

Functions	• To display the count value for service total counter of each paper size.
Use	• To check the total number of printed pages including the one at Service Mode according to each paper size.

16.11.8 Counter of Each Mode

Functions	• To display the printed pages in the following specified modes; printer. It also displays the count value of using the specified mode.
Use	• Use to check the printed pages in the following specified modes; printer, as well as No. of times each mode was used, in order to know the using condition.

16.11.9 Service Call History (Data)

Functions	• To display the trouble history in chronological order.
Use	• Use to check the trouble history in chronological order.

16.11.10 Paper Jam History

Functions	• To display the jam history in chronological order.
Use	• Use to check the jam history in chronological order. **NOTE** **• [Code] displayed on the screen of JAM history indicates JAM code. For details of JAM code, see "Trouble shooting."** See P.395

16.12 List Output

16.12.1 Machine Management List

Functions	• To produce an output of a list of setting values, adjustment values, total counter values, and others.
Use	• At the end of setup or when a malfunction occurs.
Setting/ Procedure	• Load the A4S plain paper to a paper source. • Click the Start key, which will let the machine produce the list. • The time-of-day and date will also be printed.

16.12.2 Adjustment List

Functions	• To output the adjustment list for machine adjustment, process adjustment, etc. in Service Mode.
Use	• At the end of setup or when a malfunction occurs.
Setting/ Procedure	• Load the A4S plain paper to a paper source. • Click the Start key, which will let the machine produce the list. • The time-of-day and date will also be printed.

16.13 State Confirmation

16.13.1 Sensor Check

Functions	• To display the states of the input ports of sensors and switches when the machine remains stationary.
Use	• Used for troubleshooting when a malfunction or a misfeed occurs.
Setting/ Procedure	• The operation of each of the switches and sensors can be checked on a real-time basis. • It can be checked as long as the 5-V power line remains intact even when a door is open.

A. Electrical components check procedure through input data check

- When a paper misfeed occurs in the paper feed section of the machine, the tray 2 paper feed sensor is considered to be responsible for it.

1. Remove the sheet of paper misfed.
2. From the sensor check list that follows, check the panel display of the tray 2 paper feed sensor. For the tray 2 paper feed sensor, you check the data of “Paper feed” of “Tray 2.”
3. Call the Service Mode to the screen.
4. Select [State Confirmation] → [Sensor Check] and then select the screen that contains “Paper feed” under “Tray 2.” For “Paper feed” under “Tray 2,” select “1” on the left-hand side of the screen.
5. Check that the data for “Paper feed” under “Tray 2” is “0” (sensor blocked).
6. Move the actuator to unblock the tray 2 paper feed sensor.
7. Check that the data for “Paper feed” under “Tray 2” changes from “0” to “1” on the screen.
8. If the input data is “0,” change the sensor.

16.13.2 Sensor check screens

- These are only typical screens which may be different from what are shown on each individual machine.

A. Sensor monitor

(1) Sensor monitor 1, 2

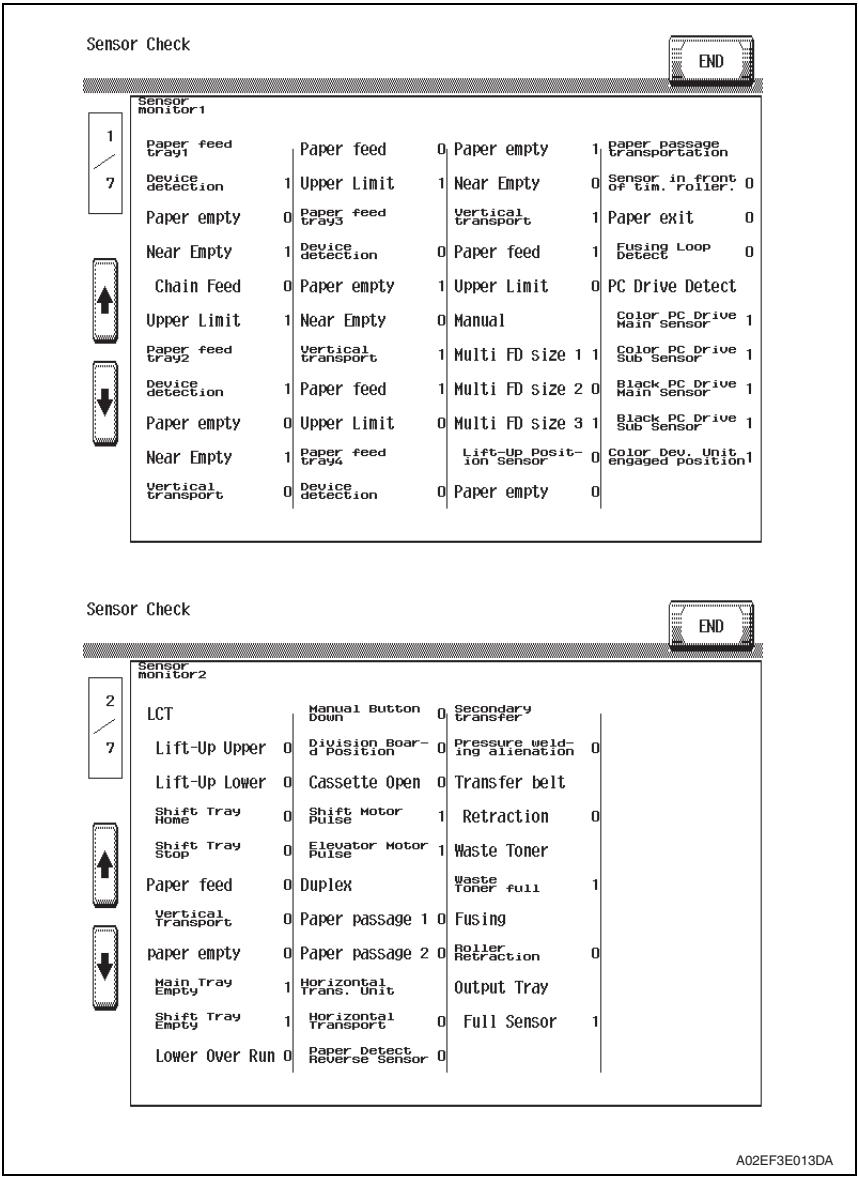

A02EF3E013DA

(2) Sensor monitor 3, 4

Sensor Check

END

Sensor monitor3 /Finisher 1

3/7

paper passage 1	0	Elevate increase tray	0	Punch position detection2	1
paper passage 2	0	Elevate position detection	1	Hole-Punch Scrap Box Full	0
Adjustment 1 home	1	Shutter home	0	Turn around remain detect.	0
Adjustment 2 home	1	Exhaust paddle home	1	Stapler save position	0
Elevate Up/down limit detection	1	Exhaust R home	1	Fan motor lock detection	0
Shutter detection	1	Processing tray paper detection	0	Output OP main body set	1
Front cover opening detect.	1	Staple CD home sensor	1		
Punch pulse	1	Self priming	1		
Saddle Dehi guide home	1	Needling empty	0		
Elevate lower limit detection	0	Staple home	1		
Elevate surface detect.	1	Punch position detection1	0		

Sensor Check

END

Sensor monitor4 /Finisher 2

4/7

Saddle exhaust	0	Self priming	1	Bin 2	
Folding papers R home	0	Saddle opening detection	1	Empty detection	0
Middle guide opening detect.	1	Saddle empty	0	Full detection	0
Saddle down guide home	1	Saddle exhaust R home	0	Bin 3	
Saddle stapler1		Bin		Empty detection	0
Home	1	Paper passage 1	0	Full detection	0
Needling empty	0	Paper passage 2	0	Bin 4	
Self priming	1	Jam processing door opening	0	Empty detection	0
Saddle stapler2		Bin 1		Full detection	0
Home	1	Empty detection	0		
Needling empty	0	Full detection	0		

A02EF3E014DA

(3) Sensor monitor 5, 6

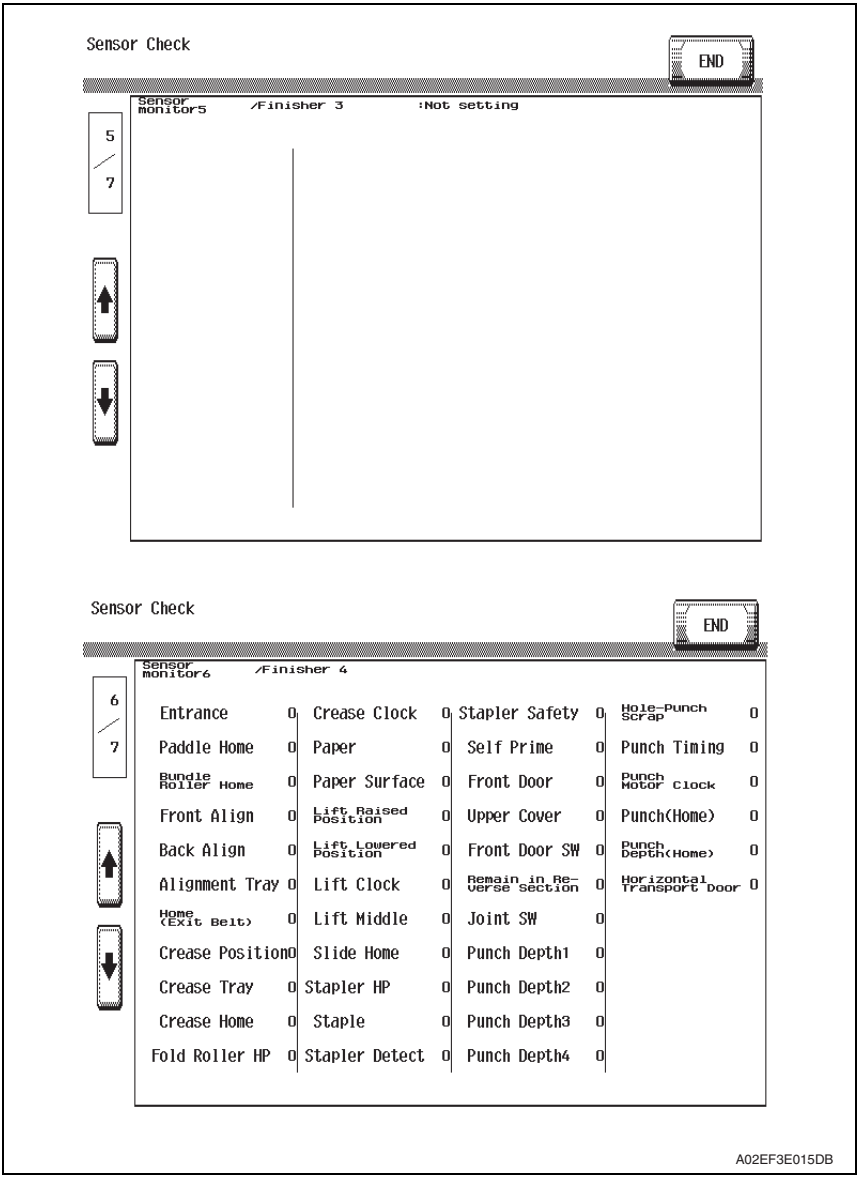

(4) Sensor monitor 7

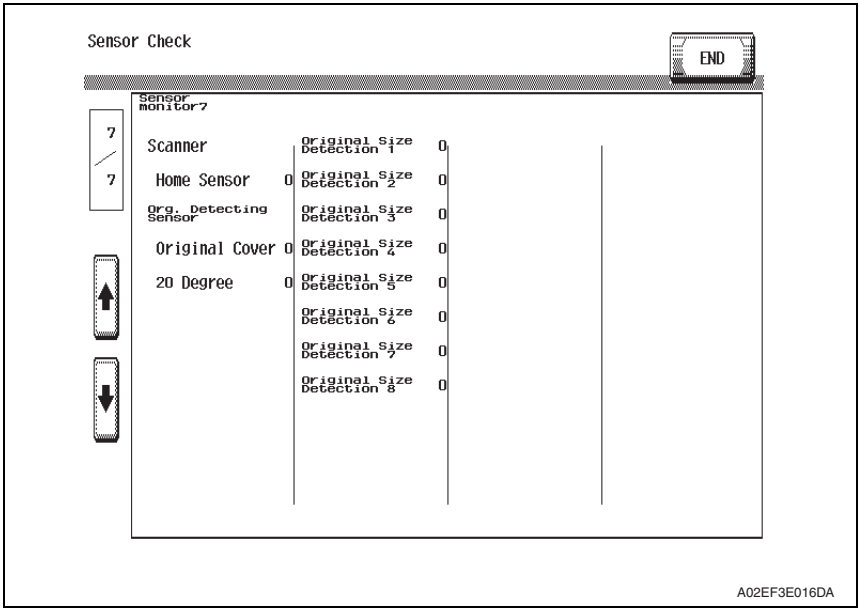

16.13.3 Sensor check list

A. Sensor monitor

(1) Sensor monitor 1

Symbol	Panel display		Part/signal name	Operation characteristics/panel display	
				1	0
PS2	Paper feed tray 1	Device detection	Paper feed tray 1 device detection sensor	In position	Out of position
PS7		Paper empty	Paper feed tray 1 paper empty sensor	Paper not present	Paper present
PS9		Near Empty	Paper feed tray 1 near empty sensor	Near empty	Unblocked
PS1		Chain feed	Paper feed tray 1 chain feed sensor	Paper present	Paper not present
PS8		Upper Limit	Paper feed tray 1 upper limit sensor	At raised position	Not at raised position
PS10	Paper feed tray 2	Device detection	Paper feed tray 2 device detection sensor	In position	Out of position
PS13		Paper empty	Paper feed tray 2 paper empty sensor	Paper not present	Paper present
PS9		Near Empty	Paper feed tray 2 near empty sensor	Near empty	Unblocked
PS16		Vertical transport	Paper feed tray 2 vertical transport sensor	Paper present	Paper not present
PS14		Paper feed	Paper feed tray 2 paper feed sensor	Paper present	Paper not present
PS15		Upper Limit	Paper feed tray 2 upper limit sensor	At raised position	Not at raised position
PS112	Paper feed tray 3	Device detection	See P.19 of the PC-104/204 service manual.		
PS115		Paper empty			
PS113		Near Empty			
PS117		Vertical transport			
PS116		Paper feed			
PS114		Upper Limit			
PS121	Paper feed tray 4	Device detection	See P.19 of the PC-104/204 service manual.		
PS124		Paper empty			
PS122		Near Empty			
PS126		Vertical transport			
PS125		Paper feed			
PS123		Upper Limit			

Symbol	Panel display		Part/signal name	Operation characteristics/panel display	
				1	0
PS18	Manual	Multi FD size 1	Manual multi FD size sensor/1	ON	OFF
PS19		Multi FD size 2	Manual multi FD size sensor/2	ON	OFF
PS20		Multi FD size 3	Manual multi FD size sensor/3	ON	OFF
PS17		Lift-Up Position Sensor	Manual lift-up position sensor	Paper not present	Paper present
PS21		Paper empty	Manual paper empty sensor	At raised position	Not at raised position
PS23	Paper passage transportation	Sensor in front of tim. roller.	Sensor in front of tim. roller	Paper present	Paper not present
PS25		Paper exit	Paper exit sensor	Paper present	Paper not present
PS24		Fusing Loop Detect	Fusing loop detect sensor	Loop present	Loop not present
PS27	Photo conductor	Color PC Drive Main Sensor	Color PC drive main sensor	Blocked	Unblocked
PS28		Color PC Drive Sub Sensor	Color PC drive sub sensor	Blocked	Unblocked
PS29		Black PC Drive Main Sensor	Black PC drive main sensor	Blocked	Unblocked
PS30		Black PC Drive Sub Sensor	Black PC drive sub sensor	Blocked	Unblocked
PS26		Color Dev. Unit engaged position	Color dev. unit engaged position sensor	engaged	not engaged

(2) Sensor monitor 2

Symbol	Panel display		Part/signal name	Operation characteristics/panel display	
				1	0
PS4	LCT	Lift-Up Upper	See P.23 of the PC-405 service manual.		
PS13		Lift-Up Lower			
PS12		Shift Tray Home			
PS11		Shift Tray Stop			
PS1		Paper feed			
PS2		Vertical Transport			
PS3		Paper empty			
MTPEB		Main Tray Empty			
PS9		Shift Tray Empty			
PS7		Lower Over Run			
MDCB		Manual Button Down			
PS14		Division Board Position			
PS6		Casette Open			
PS8		Shift Motor Pulse			
PS10		Elevator Motor Pulse			
PS33	Duplex	Paper passage1	Duplex paper passage sensor/1	Paper present	Paper not present
PS34		Paper passage2	Duplex paper passage sensor/2	Paper present	Paper not present
PS25	Horizontal Trans. Unit	Horizontal Transport	Paper sensor	Paper present	Paper not present
—		Paper Detect Reverse Sensor	—	—	—
PS36	secondary transfer	Pressure welding alienation	2nd image transfer welding alienation sensor	Not Retracted	Retracted
PS31	Transfer belt	Retraction	Transfer belt retraction sensor	Not Retracted	Retracted
PS32	Waste toner	Waste toner full	Waste toner full sensor	Blocked	Unblocked
PS38	Fusing	Roller retraction	Fusing roller retraction sensor	Not Retracted	Retracted

(3) Sensor monitor 3

Symbol	Panel display		Part/signal name	Operation characteristics/ panel display	
				1	0
PS1	Sensors monitor3	Carrying Paper Passage	See P.62 of the FS-519/PK-515/OT-602 service manual.		
PS2		Middle Paper Passage			
PS7		Home1 (CD-Align)			
PS8		Home2 (CD-Align)			
SW3		Elevate Tray Raised/ Lowered			
SW2		Shutter			
SW1		Front Cover			
PS502		Punch Pulse			
PS23		Home (Saddle In and Out)			
PS13		Elevate Tray Lowered			
PS12		Surface (Elev.)			
-		Elevate Tray Proliferation			
PS11		Elevate Position			
PS14		Home (Shutter)			
PS6		Home (Exit Paddle)			
PS5		Home (Exit R)			
PS3		Empty (Finisher)			
PS9		Home (Staple CD)			
-		Self Printing			
-		Staple Empty			
-		Home (Stapler)			
PS500		Punch Position1			
PS501		Punch Position2			
PS503		Punch Dust Full			
PS4		Remain in Reverse Section			
PS10		Stapler Save Position			
M9		Fan Motor Lock			
SW4		Exit OP Machine Set			

(4) Sensor monitor 4

Symbol	Panel display		Part/Signal name	Operation characteristics/panel display	
				1	0
PS20	Sensors monitor 4	Saddle exit	See P.27 of the SD-505 service manual.		
PS22		Folding R home			
SW5		Middle guide			
PS24		Saddle guide			
—		Saddle stapler 1			
—		Home			
—		Staple empty			
—		Self priming			
—		Saddle stapler 2			
—		Home			
—		Staple empty			
—		Self priming			
SW4		Saddle			
PS21		Saddle empty			
PS18		Home (Saddle exit)			
PS10	Bin	Paper Passage 1	See P.9 of the MT-502 service manual.		
PS9		Paper Passage 2			
PS11		Door (Jam)			
PS1	Bin1	Empty			
PS5		Full			
PS2	Bin2	Empty			
PS6		Full			
PS3	Bin3	Empty			
PS7		Full			
PS4	Bin4	Empty			
PS8		Full			

(5) Sensor monitor 5

Item on the sensor 5 is not used.

(6) Sensor monitor 6

Symbol	Panel display		Part/Signal name	Operation characteristics/panel display	
				1	0
PS1	Sensors monitor 6	Entrance	See P.34 of the FS-609/PK-501 service manual.		
PS2		Paddle Home			
PS3		Bundle Roller Home			
PS4		Front Align			
PS5		Back Align			
PS6		Alignment Tray			
PS7		Home (Exit Belt)			
PS10		Crease Position			
PS13		Crease Tray			
PS11		Crease Home			
PS12		Fold Roller HP			
PS14		Crease Clock			
PS8		Paper			
PS9		Paper Surface			
PS15		Lift Raised Position			
PS16		Lift Lowered Position			
PS17		Lift Clock			
—		Lift Middle			
PS18		Slide Home			
PS19		Stapler HP			
PS20		Staple			
—		Stapler Detect			
SW3 SW4		Stapler Safety			
PS21		Self Prime			
PS22		Front Door			
PS23		Upper Cover			
SW1		Front Door SW			
—		Remain in Reverse Section			
SW2		Joint SW			
—		Punch Depth1			
—		Punch Depth2			
—		Punch Depth3			
—		Punch Depth4			
—		Hole-Punch Scrap			

Symbol	Panel display		Part/Signal name	Operation characteristics/panel display	
				1	0
—	Sensors monitor 6	Punch Timing	See P.34 of the FS-609/PK-501 service manual.		
PS3		Punch Motor Clock			
PS1		Punch (Home)			
PS2		Punch Depth (Home)			
PS26		Horizontal Transport Door			

(7) Sensor monitor 7

Item on the sensor 7 is not used.

16.13.4 Table Number

Functions	• When IDC is detected, for plain paper, Thick 1, Thick, and Black, the machine independently displays each Vg/Vdc output value that is calculated based on the density (toner amount stuck on the belt) of the test pattern created on the transfer belt. • Reference values: C, M, Y K Vdc: around 400 V, Vg: around 500 V
Use	• Used for troubleshooting of image problems.
Setting/ Procedure	• If the value is high, correct so that the image density becomes low. • If the value is low, correct so that the image density becomes high.

16.13.5 Level History1

Functions	• To display TCR (T/C ratio), IDC/registration sensor output values, and fusing temperature.
Use	• Used for troubleshooting of image problems.
Setting/ Procedure	• TCR-C/-M/-Y/-K : Shows the T/C output reading taken last. • IDC1/IDC2 : Shows the latest IDC data. • Temp-Heat : Displays the latest temperature of the heating roller. • Temp-Press : Displays the latest temperature of the pressure roller. “Reading taken last” means • Density of toner of the latest image. • When a test print is produced by clicking the Start key while level history 1 is being displayed.

16.13.6 Level History 2

Functions	• IDC Sensor (Transfer belt bare surface level) as adjusted through the image stabilization sequence and ATVC value.
Use	• Used for troubleshooting of image problems.
Setting/ Procedure	• IDC Sensor: Shows the intensity adjustment value (0 to 255) of the IDC sensor. • ATVC (C, M, Y, K): Shows the first image transfer ATVC adjustment value (5 to 40 μA). • ATVC (2nd) : Shows the second image transfer ATVC adjustment value (300 to 4800 V).

16.13.7 Temp. & Humidity

Functions	• To display the temperature and humidity of a specific location (AIDC sensor portion) inside the machine and fusing temperature.
Use	• Used as reference information when a malfunction occurs.
Setting/ Procedure	• Temp-Inside : 0 to 100 °C in 1 °C increments • Temp-Heater : 0 to 260 °C in 1 °C increments • Temp-press. : 0 to 260 °C in 1 °C increments • Humidity : 0 to 100 % in 1 % increments • Absolute Humidity : 0 to 100 in 1 increments

16.13.8 CCD Check

Functions	• To display the D/A value of CCD clamp/gain for R, G, and B.
Use	• Used for troubleshooting for the CCD sensor.
Setting/ Procedure	• Use the following guidelines on the correct range of values. CLAMP: The difference between the max. and min. output values should be within ±100. GAIN : The difference from the CLAMP values (R, B) should be within (90 for R and B. The difference from the CLAMP value (G) should be within ±50 for G. The difference between each pair of RO and RE, GO and GE, and BO and BE should be within 30.

16.13.9 Memory/HDD Adj.

A. Memory Check

Functions	• To check correspondence of data written to and that read from memory through write/read check. Rough Check • A check is made to see if the image data reading and writing are correctly made in a very limited area. • The progress of the check sequence is displayed in percentage. Detail Check • A check is made to see if the image data reading and writing are correctly made at the addresses and buses in all areas. • The progress of the check sequence is displayed in percentage.
Use	• If the printed image is faulty.
Adjustment Procedure	*1.* Call the Service Mode to the screen. *2.* Click these keys in this order: [State Confirmation] → [Memory / HDD Adj.] → [Memory Check]. *3.* Select the desired type of check, either [Rough Check] or [Detail Check]. *4.* Click the Start key to start the check procedure. *5.* When the check procedure is completed, the results are shown on the screen. If the check results are NG, check the memory for connection or replace the memory with a new one. ✻ Click the Stop key to interrupt the check sequence.

B. Compress / Decompression Check

Functions	• To check whether compression and decompression are carried out properly.
Use	• If the printed image is faulty.
Adjustment Procedure	*1.* Call the Service Mode to the screen. *2.* Click these keys in this order: [State Confirmation] → [Memory / HDD Adj.] → [Compress / Decompression Check]. *3.* Clicking the Start key will automatically start to complete a compression/decompression check sequence. *4.* The check result will be displayed.

C. JPEG check

- This function is available only when the optional scan accelerator kit (SA-501) is mounted.

Functions	• Not used.
Use	
Adjustment Procedure	

D. Memory Bus Check

Functions	• To check to see if image data is correctly transferred from scanner to memory, and from memory to printer.
Use	• If the printed image is faulty.
Adjustment Procedure	*1.* Call the Service Mode to the screen. *2.* Click these keys in this order: [State Confirmation] → [Memory / HDD Adj.] → [Memory Bus Check]. *3.* Select either [Scanner → Memory], [Memory → PRT], or both. *4.* Clicking the Start key will start the memory bus check and be terminated automatically. *5.* The check result will be displayed, [OK] or [NG].

E. Work Memory In/Out Check

Functions	• To check to see if input and output of image data of work memory are correctly performed.
Use	• If the printed image is faulty.
Adjustment Procedure	*1.* Call the Service Mode to the screen. *2.* Click these keys in this order: [State Confirmation] → [Memory / HDD Adj.] → [Work Memory In/Out Check]. *3.* Select either [Input Check], [Output Check], or both. *4.* Clicking the Start key will start the work memory input/output operation check sequence and be terminated automatically. *5.* The check result will be displayed, [OK] or [NG].

F. HDD Version Up

Functions	• To upgrade administration data (Document management information, address information, etc.) other than image data in HDD.
Use	
Adjustment Procedure	*1.* Open the Service Mode. *2.* Set the following setting. [State Confirmation] → [Memory/HDD Adj.] → [HDD Version Up] *3.* Click the Start key to start upgrading the version. *4.* When upgrading the version is complete, the outcome will be displayed on the screen. **NOTE** • **Make sure to turn power switch OFF when upgrading is complete, and wait for ten seconds to turn back ON.**

G. HDD R/W Check

Functions	• To check to see if the hard disk is connected properly, and if read/write operation of the hard disk is correctly performed.
Use	• When the hard disk is mounted.
Adjustment Procedure	*1.* Call the Service Mode to the screen. *2.* Click these keys in this order: [State Confirmation] → [Memory / HDD Adj.] → [HDD R/W Check]. *3.* Clicking the Start key will start the hard disk R/W check sequence and be terminated automatically. *4.* The check result will be displayed, [OK] or [NG].

H. HDD Format

Functions	• To format the hard disk. • The function proceeds in the order of physical format to logical format. • If the hard disk is yet to be formatted, the malfunction code "C-D010" will appear. Ignore this code and continue with the formatting procedure.
Use	• When the hard disk is mounted. • When the hard disk is to be initialized. (Physical format to logical format)
Adjustment Procedure	*1.* Call the Service Mode to the screen. *2.* Click these keys in this order: [State Confirmation] → [Memory / HDD Adj.] → [HDD Format]. **(1) Physical Format** *1.* Click [Physical Format]. *2.* Click the Start key to start the formatting sequence. *3.* The sequence will be automatically terminated as it is completed. *4.* Turn off the power switch and turn it on again more than 10 seconds after. **(2) Logical Format (only when initial is set up)** *1.* Click [Logical Format]. *2.* Click the Start key to start the formatting sequence. *3.* The sequence will be automatically terminated as it is completed. *4.* Turn off the power switch and turn it on again more than 10 seconds after. ✻ Formatting the hard disk will erase all data contained in it.

16.13.10 Memory/HDD State

Functions	• To display the condition and amount of the memory and hard disk. • To display the mounting condition of the optional encryption board (security kit SC-503).
Use	• Use to check the condition and amount of the memory and hard disk. • Use to setup the optional security kit SC-503.
Setting/ Procedure	• When the encryption board is mounted, the machine automatically recognizes it and displays [Set].

16.13.11 Color Regist

Functions	• To check each of C, M, and Y for color shift amount. • The data is updated after a color shift correction has been made or color shift adjustment has been completed.
Use	• Use for check when color shift is evident. • Use for adjustment of PH skew.
Setting/ Procedure	• For each of C, M, and Y, the color shift amount (in X and Y directions) at two locations (one at the front and the other in the rear) and the difference in color shift amount between the front and rear (X and Y directions) are displayed. • Display unit: dots • The shift amounts is displayed with reference to K for C, M and Y, and that for K is displayed with reference to an ideal position.

16.13.12 IU Lot No.

Functions	• To display the 10-digit lot number for each of Cyan, Magenta, Yellow, and Black IUs. • The lot number data is stored in EEPROM of each IU.
Use	• Use for checking the IU Lot No.

16.13.13 Adjustment Data List

Functions	• To display the adjustment and setting value set in the main body.
Use	• Use to check the adjustment and setting value set in the main body.

16.14 Test Mode

- To check the image on the printer side by letting the machine produce various types of test pattern. It also tests the printing operation in running mode.
- The machine searches through the paper sources in the order of tray 2, tray 3, tray 4, and tray 1 for paper of the maximum size for printing.

16.14.1 Procedure for test pattern output

1. Click [Test Mode] to display the test mode menu.
2. Click the desired test pattern key.
3. Set up the desired functions and click the Start key.

16.14.2 Gradation Pattern

Functions	• To produce a gradation pattern.
Use	• Used for checking gradation reproducibility.
Pattern	SINGLE HYPER Gradation Cyan A02EF3C510DA
Setting/ Procedure	• # of Print (“1” to 999) • Select “SINGLE” (single print) or MULTI (multi print). • Select FEET or “HYPER”. • Select “Gradation” or Resolution if HYPER has been selected. • Select the color mode. “Cyan”, Magenta, Yellow, Black (4PC), CMYK, 8Color, 4Color, Black (1PC) • Black (4PC): Uses four colors. • Black (1PC): Uses one color of black.

16.14.3 Halftone Pattern

Functions	• To produce a solid halftone pattern.
Use	• Used for checking uneven density and pitch noise.
Pattern	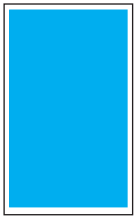 SINGLE HYPER Gradation Cyan Density: 255 A02EF3C519DA
Setting/ Procedure	• # of Print (“1” to 999) • Select “SINGLE” (single print) or MULTI (multi print). • Select FEET or “HYPER.” • Select “Gradation” or Resolution if HYPER has been selected. • Select the color mode. “Cyan”, Magenta, Yellow, Black (4PC), Red, Green, Blue, CMYK, 3 Color, 4 Color, Black (1PC), MIX • Type the density level (0 to “255”).

16.14.4 Lattice Pattern

Functions	• To produce a lattice pattern.
Use	• Used for checking fine line reproducibility and uneven density. • A reverse pattern is also used to check for fine line reproducibility of white letters on a solid background.
Pattern	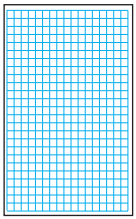 SINGLE FEET Cyan CD Width: 5 FD Width: 5 Density: 255 Normal A02EF3C511DA
Setting/ Procedure	• # of Print (“1” to 999) • Select “SINGLE” (single print) or MULTI (multi print). • Select “FEET” or HYPER. • Select Gradation or Resolution. (Only select HYPER) • Select the color mode. “Cyan”, Magenta, Yellow, Black (4PC), Red, Green, Blue, CMYK, 3 Color, 4 Color, Black (1PC) • Enter CD width and FD width (0 to 191 dots). • Type the density level (0 to “255”). • Select “Normal” or Reverse.

16.14.5 Solid Pattern

Functions	• To produce each of the C, M, Y, and K solid patterns.
Use	• Used for checking reproducibility of image density.
Pattern	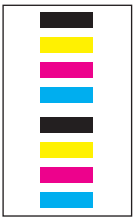 SINGLE HYPER Gradation Density: 255 A02EF3C512DA
Setting/ Procedure	• # of Print (“1” to 999) • Select “SINGLE” (single print) or MULTI (multi print). • Select FEET or “HYPER.” • Select “Gradation” or Resolution if HYPER has been selected. • Type the density level (0 to “255”).

16.14.6 Color Sample

Functions	• To produce a color sample.
Use	• Used for checking reproducibility of each of the different colors.
Pattern	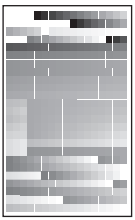 SINGLE HYPER Gradation A02EF3C513DA
Setting/ Procedure	• # of Print (“1” to 999) • Select “SINGLE” (single print) or MULTI (multi print). • Select FEET or “HYPER.” • Select “Gradation” or Resolution if HYPER has been selected. • Produce 12-gradation-level patches of C, M, Y, K, R, G, and B, and a patch of each of the 12 reference colors in the hue circle with lightness and saturation corrected.

16.14.7 8 Color Solid Pattern

Functions	• To produce an 8-color solid pattern.
Use	• Used for checking color reproducibility and uneven density of each color.
Pattern	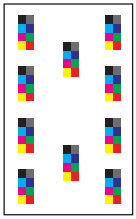 SINGLE HYPER Gradation Density: 255 A02EF3C514DA
Setting/ Procedure	• # of Print (“1” to 999) • Select “SINGLE” (single print) or MULTI (multi print). • Select FEET or “HYPER.” • Select “Gradation” or Resolution if HYPER has been selected. • Type the density level (0 to “255”).

16.14.8 CMM pattern

Functions	• To produce a CMM (Color Management Module) pattern.
Use	• Used to check color difference depending on the places where output is made.
Pattern	Error diffusion 270 degrees A02EF3C515DA
Setting/ Procedure	• # of Print is always “1”. • Select “Error diffusion”, Gradation, or Resolution. • Select an angle from among “0 degrees”, 90 degrees, 180 degrees, and 270 degrees.

16.14.9 Running Mode

Functions	• To test the printing operation in running mode.
Use	• Use to check the printing operation in running mode from each paper source.
Setting/ Procedure	*1.* Call the Service Mode to the screen. *2.* Click these keys in this order: [Test Mode] → [Running Mode]. *3.* Select the paper size (Tray 1, bypass only). *4.* Select the paper type. *5.* Click the Start key to start the running mode. *6.* Clicking the Stop key will stop operation.

16.15 Finisher

16.15.1 CB-FN adjustment

A. Fold&Staple Pos. Adjustment

See P.30 of the SD-505 service manual.

B. Finisher Check

See P.64 of the FS-519/PK-515/OT-602 service manual.

C. Punch Regist Loop Size

See P.68 of the FS-519/PK-515/OT-602 service manual.

D. Punch Horizontal Position

See P.66 of the FS-519/PK-515/OT-602 service manual.

⚠1 16.15.2 FN-X3 Adjustment

A. Center-Staple Position Adj.

See P.37 of the FS-609/PK-501 service manual.

B. Half-Fold Position Adj.

See P.39 of the FS-609/PK-501 service manual.

16.15.3 Punch option setting

See P.69 of the FS-519/PK-515/OT-602 service manual.
See P.41 of the FS-609/PK-501 service manual.

16.16 Internet ISW

- By using this setting, the firmware stored in the server can be downloaded over internet for upgrading.
- For details for upgrading the firmware, refer to “Firmware upgrade” in the Maintenance section.
See P.59

16.16.1 Internet ISW Set

Functions	• To set whether or not to enable each setting for Internet ISW.
Use	• To use when upgrading the firmware by Internet ISW. • Each setting such as Server setting will be valid by setting this to “ON”. **NOTE** • **When the following setting is set to “ON”, this setting will automatically be set to “OFF” and cannot be changed.** **[Admin. Settings] → [Security Settings] → [EnhancedSecurity]**
Setting/ Procedure	• The default setting is OFF. ON “OFF”

16.16.2 HTTP Setting

- It will be displayed only when [Internet ISW Set] is set to “ON”.

A. Data Input Setting

Functions	• To set whether or not to enable downloading using the HTTP protocol.
Use	• To use when accessing the server using the HTTP protocol. • Setting on the proxy server will be valid when this setting is “ON”.
Setting/ Procedure	• The default setting is OFF. ON “OFF”

B. Connect Proxy

Functions	• To set whether or not to connect via proxy server when accessing the server.
Use	• To use when accessing the server via proxy server.
Setting/ Procedure	• The default setting is OFF. ON “OFF”

C. Proxy Server

Functions	• To set the address and the port number for the proxy server.
Use	• To use when accessing the server via proxy server.
Setting/ Procedure	<Server Address> • Enter an address using IPv4, IPv6, or FQDN format. <Port Number> • Enter the value between 1 and 65535 using the 10-key pad. (The default setting is 80)

D. Proxy Authentication

Functions	• To set the login name or password when authentication is necessary for accessing the proxy server.
Use	• To use when authentication is necessary for accessing the proxy server.
Setting/ Procedure	<Authentication> • The default setting is OFF. ON “OFF” <Log-in Name> • Enter the login name (up to 32 one-byte characters) on the on-screen keyboard. <Password> • Enter the password (up to 32 one-byte characters) on the on-screen keyboard.

E. Connection Time-Out

Functions	• To set the time for the timeout for accessing the server.
Use	• To use when changing the time for the timeout for accessing the server.
Setting/ Procedure	• The default setting is 60 sec. 30 to 300 sec.

16.16.3 FTP Setting

• It will be displayed only when [Internet ISW Set] is set to “ON”.

A. Data Input Setting

Functions	• To set whether or not to enable downloading using FTP protocol.
Use	• To use when accessing the server with FTP protocol. • Setting this to “ON” will enable the proxy server setting.
Setting/ Procedure	• The default setting is ON. “ON” OFF

B. Connect Proxy

Functions	• To set whether or not to access the server via proxy server.
Use	• To use when accessing the server via proxy server.
Setting/ Procedure	• The default setting is OFF. ON “OFF”

C. Proxy Server

Functions	• To set the address and the port No. of the proxy server.
Use	• To use when accessing the server via proxy server.
Setting/ Procedure	<Server Address> • Enter an address using IPv4, IPv6, or FQDN format. <Port Number> • Enter the value between 1 and 65535 using the 10-key pad.

D. Connection Setting

Functions	• To set the port No. and the time for timeout when accessing the FTP server, and also to set whether or not to enable PASV mode.
Use	• To use when accessing the FTP server. • To use when connecting by the PASV (passive) mode (FTP server side will inform the connection port before connecting).
Setting/ Procedure	<Port Number> • Enter the value between 1 and 65535 using the 10-key pad. <Connection Time Out> • Enter the value between 1 and 60 (min.) using the 10-key pad. <PASV Mode> • The default setting is OFF. ON “OFF”

16.16.4 Forwarding Access Setting

A. User ID

Functions	• To register the user ID for accessing the program server where firmware is to be stored.
Use	
Setting/ Procedure	*1.* Select [User ID]. *2.* Enter the user ID (up to 64 one-byte characters) on the on-screen keyboard.

B. Password

Functions	• To register the password for accessing the program server where firmware is to be stored.
Use	
Setting/ Procedure	*1.* Select [Password]. *2.* Enter the password (up to 64 characters) on the on-screen keyboard.

C. URL

Functions Use	• To register the address and directory of the program server where the firmware is to be stored in URL.
Setting/ Procedure	*1.* Select [URL]. *2.* Enter the URL (up to 256 one-byte characters) on the on-screen keyboard. **NOTE** • **Enter the URL which format suits the protocol to be used.** **When connecting to http http:// (Host name or IP address)/ directory name or https:// (Host name or IP address)/directory name.** **When connecting to ftp ftp:// (Host name or IP address) / directory name.**

D. FileName

Functions Use	• To register the file name of the firmware data to be downloaded.
Setting/ Procedure	*1.* Select [FileName]. *2.* Enter the file name (up to 63 one-byte characters) on the on-screen keyboard.

16.16.5 Download

Functions	• Access the program server according to the Internet ISW setting, and download the firmware.
Use	• To use when updating the firmware via network.
Setting/ Procedure	*1.* Select [Download]. *2.* Click [ISW Start] to start downloading the firmware. *3.* The message to show the status will be displayed on the screen while connecting and transferring data. **NOTE** • **When it failed to connect to the program server, or failed to download, the error code and the message will be displayed. Check the cause of the error by the error code, and follow the message for resetting.** **Refer to "Error cord list" for the error codes.** See P.85 *4.* When the firmware is normally upgraded, the main body will automatically be restarted to complete the Internet ISW.

16.17 Enhanced Security function setting procedure

16.17.1 Procedure

1. Call the Service Mode to the screen.
2. Click the following keys in this order.
   Stop → 0→ Clear
3. Enhanced Security menu will appear.

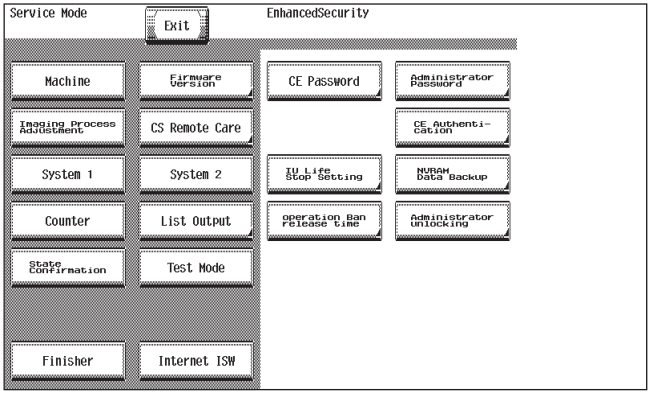

A02EF3E017DA

16.17.2 Exiting

- Click the [Exit].

16.17.3 Enhanced Security function tree

*1: Functions to be set and checked only with the jig software

Service Mode		Ref. Page
Enhanced Security *2	CE Password *3	P.382
	Administrator Password *4	P.382
	CE Authentication *1	P.382
	IU Life Stop Setting *1	P.383
	NVRAM Data Backup *5	P.383
	Operation Ban release time *6	P.383
	Administrator unlocking *7	P.384

The functions marked with *2 to 7 have names different from those on the control panel. The following table shows the names on the control panel.

*2	Security Settings
*3	Service Password
*4	Admin. Password
*5	Data Backup
*6	Release Time
*7	Admin.AuthLockREL

16.17.4 CE Password

Functions	• To set and change the CE password.
Use	• Use to change the CE password.
Setting/ Procedure	• Enter the CE password (8 digits) on the on-screen keyboard. • The initial setting is “92729272.” Current Password : Enter the currently using CE password. New Password : Enter the new CE password. Re-Input Password : Enter the new CE password again. **NOTE** • **When the following setting leads to the Password Rules [ON], the password with the same letters as well as the password which is same as the previous one cannot be changed.** **[Admin. Settings] → [Security Settings]** • **NEVER forget the CE password. When forgetting the CE password, call responsible person of KMBT.**

16.17.5 Administrator Password

Functions	• To set and change the administrator password.
Use	• Use to change the administrator password. • Use this function when the administrator forget the administrator password because a new password can be set without entering the current administrator password with this.
Setting/ Procedure	• Enter the administrator password (8 digits) on the on-screen keyboard. • The initial setting is “12345678.” New Password : Enter the new administrator password. Re-Input Password : Enter the new administrator password again. **NOTE** • **When the following setting leads to the Password Rules [ON], the password with the same letters, the password which is same as the previous one and the password of less than eight digits cannot be changed.** **[Admin. Settings] → [Security Settings]**

16.17.6 CE Authentication

- It will not be displayed when the following settings are set to “ON”.
  [Admin. Settings] → [Security Setting] → [EnhancedSecurity] or [Password Rules].

Functions	• To determine whether or not to authenticate CE password as entering Service Mode.
Use	• Use when authenticating CE password as entering Service Mode.
Setting/ Procedure	• The default setting is OFF. ON “OFF”

16.17.7 IU Life Stop Setting

Functions	• To select whether or not to stop a print cycle when the IU reaches its service life.
Use	• Use to select not to stop the print cycle when the IU reaches its service life.
Setting/ Procedure	The default setting is Stop. "Stop" No Stop

16.17.8 NVRAM Data Backup

Functions	• To backup NVRAM data in the main body to the flash memory.
Use	• To backup current data in order to prevent data in NVRAM from being erased unexpectedly. • To backup data manually. It usually makes backup every hour automatically. • Backup data can be restored by following the specified procedure when the trouble (CD3XX) occurred. Refer to "Troubleshooting" for details on restoration procedure. See P.460
Setting/ Procedure	*1.* Click [NVRAM Data Backup]. *2.* Click [Start] to start making a backup. *3.* Check the message [Backup is completed.], and turn power switch OFF. Wait for ten seconds or more and turn power switch back ON.

16.17.9 Operation Ban release time

Functions	• To set the time that elapses before the machine releases an access lock that is activated after the CE password authentication.
Use	• To set the period of time that elapses before the machine releases the access lock, which aims to prevent the unintentional release of the access lock. • If the machine is set into an access lock state as a result of CE Authentication, turn power ON with the Menu/Select key held down; then, on the Trouble Reset screen, click ▲ → ▶ → ▼ → ◀ → ▼ → ▶ → ▲. This starts the access lock release timer (set by the Operation Ban release time function). The access lock state is thereafter released when the period of time set in this function elapses. **NOTE** • **If the access lock state is released through the above procedure, do not turn power OFF until the time elapses as set through [Service Mode] → [Security Settings] → [Operation Ban release time]. If the power is turned OFF before the timer set for Operation Ban release time expires, the lock release operation becomes invalid.**
Setting/ Procedure	• The default setting is 1 (minutes). 1 to 60 (minutes) **NOTE** • **When EnhancedSecurity is set to ON in [Admin. Settings] → [Security Settings] → [EnhancedSecurity], the period of time that can be set in this setting is 5 minutes or more.**

16.17.10 Administrator unlocking

Functions	• To release an access lock that is activated after an administrator password authentication.
Use	• To release the access lock with service authority when an administrator password authentication fails and the access lock is activated. • When the power switch is turned OFF and ON or the period of time set in the Release Time Settings elapses, the machine releases the access lock that is activated after the administrator password authentication. In addition to these operations, this setting provides another way to release the access lock.
Setting/ Procedure	*1.* Click [Administrator unlocking]. *2.* Click [unlocking] to release an access lock. *3.* When [OK] is displayed, click [OK].

16.18 Billing Setting function setting procedure

16.18.1 Procedure

1. Call the Service Mode to the screen.
2. Click the following keys in this order.
   Stop → 9
3. Billing Setting menu will appear.

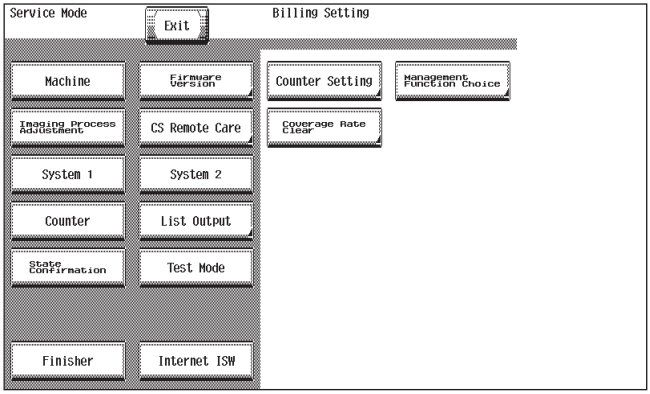

A02EF3E018DA

16.18.2 Exiting

- Click the [Exit].

16.18.3 Billing Setting function tree

*1: Functions to be set and checked only with the jig software
*2: It have name or hierarchical level different from those on the control panel.
[System Settings] → [AuthDeviceSetting] → [Auth. Mode]

Service Mode		Ref. Page
Billing Setting	Counter Setting *1	P.386
	Management Function Choice *2	P.387
	Coverage Rate Clear *1	P.387

16.18.4 Counter Setting

Functions	• To set the counting method for the total counter, size counter and long length paper counter. • To set the size regarded as the large size (2 counts.)
Use	• Use to change the counting method for the counters.
Setting/ Procedure	Total Counter Mode 1: 1 count per 1 print cycle (Default: Japan) Mode 2: Large size is double counts (Default: US, Europe, Others1, Others2, Others3, Others4) **NOTE** **• The content of this setting is reflected in the count method with the key counter.**
	Size Counter • A3/11 x 17 : When it exceeds 279 mm in the main scan direction and 420 mm in the sub scan direction, it is regarded as the large size. • A3/B4/11 x 17/8 1/2 x 14 : When it exceeds 215 mm in the main scan direction and 355 mm in the sub scan direction, it is regarded as the large size. • A3/11 x 17/B4/8 1/2 x 14/Foolscap: When it exceeds 203 mm in the main scan direction and 330 mm in the sub scan direction, it is regarded as the large size (However the size in the main scan direction changes according to the foolscap size setting.) • Not counted (Default: Japan) • A3 and 11 x 17 (Default: US) • A3, B4, 11 x 17, and 8 1/2 x 14 (Default: Europe, Others 1, Others 2, Others 3, Others 4) • A3, B4, Foolscap, 11 x 17, 11 x 14, and 8 1/2 x 14 ✻ Count-up table

printing	1-Sided				2-Sided			
Size	Sizes other than those specified		Specified sizes		Sizes other than those specified		Specified sizes	
Mode	Mode		Mode		Mode		Mode	
	1	2	1	2	1	2	1	2
Total	1	1	1	2	2	2	2	4
Size	0	0	1	1	0	0	2	2
2-sided Total	0	0	0	0	1	1	1	1

0: No count; 1: 1 count; 2: 2 counts; 3: 3 counts; 4: 4 counts

Setting/ Procedure	Long Length Paper Counter Mode • When printing on the long paper (457.2 mm or over), the counting value will be the total of the value set by the total counter mode and the value by this setting. • The default setting is Mode 4. Mode 1 : + 0 count Mode 2 : + 1 count Mode 3 : + 2 counts (457.2 to 915.0 mm will be + 1 count) Mode 4 : + 3 counts (457.2 to 686.0 mm will be + 1 count, and 686.1 to 915.0 mm will be + 2 count)

16.18.5 Management Function Choice

- To set whether or not the Management Device (Data controller) is to be mounted.

NOTE

- **It will not be displayed when the following setting is set to "ON".**
  [Admin. Settings] → [Security Setting] → [EnhancedSecurity]

A. Authentication Device 2

Functions	• To set whether or not the authentication device 2 is installed.
Use	• Set when the authentication unit (biometric type or card type) is mounted. Biometrics : Uses biometrics (finger vein) authentication system Card : Uses IC card authentication system • When selecting biometrics, set a film timeout interval. • When selecting IC card authentication, a response timeout interval is displayed. (The interval is unchangeable.)
Setting/ Procedure	<Authentication Mode> Card Biometrics

16.18.6 Coverage Rate Clear

Functions	• To clear the coverage rate.
Use	• Use to clear the coverage rate.
Setting/ Procedure	• The default setting is Unset. Set "Unset" • Clicking [END] key will clear the coverage rate.

17. Procedure for resetting

17.1 Trouble resetting

Functions	• If the all troubles occur and the status would not be cleared by turning power switch OFF and ON again, or opening and closing the front door, clear the status of the machine.
Use	• To be used when the status would not be cleared by turning power switch OFF and ON again, or opening and closing the front door in case of a trouble.
Setting/ Procedure	*1.* Turn OFF the power switch. *2.* Turn power switch ON while pressing the Menu/Select key. *3.* Check that the Trouble Reset screen appears. *4.* Press the Menu/Select key. *5.* Check to make sure that [Completed. Please turn power OFF and ON.] is displayed and the it has been reset. *6.* After turning off the power switch, turn it on again more than 10 seconds after and check if the machine starts correctly.

17.2 Contents to be cleared by reset function

Items for clearing / Contents to be cleared		Front door open/close	Power switch OFF/ON	Trouble resetting	Initialization	
					System Error Clear	Data Clear
Jam display		❍	—	—	❍	❍
Malfunction display	Rank A Fusing	—	—	❍	❍	—
	Rank B	❍	—	❍	—	—
	Rank C	—	❍	❍	—	—
Erratic operation / display		—	❍	—	—	—
Utility Mode (Except items on Expert Adjustment.)		—	—	—	—	❍
Billing Setting	Counter Setting	—	—	—	—	❍
	Management Function Choice	—	—	—	—	❍

❍: Will be cleared (initialized)
-: Will not be cleared

18. Mechanical adjustment

18.1 Mechanical adjustment of the paper feed section

18.1.1 Skew adjustment of the tray 1, 2

This adjustment must be made in the following case:

- **To reduce paper skew that cannot be corrected by the registration loop adjustment when the tray 1 or 2 is within the specifications.**

1. Pull out the tray where this adjustment is made.

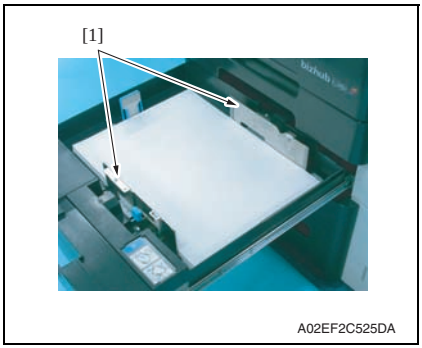

2. Load the tray with the paper.
3. Move the set of the paper guides [1] until no gap is produced between the both ends of paper and the paper guides.

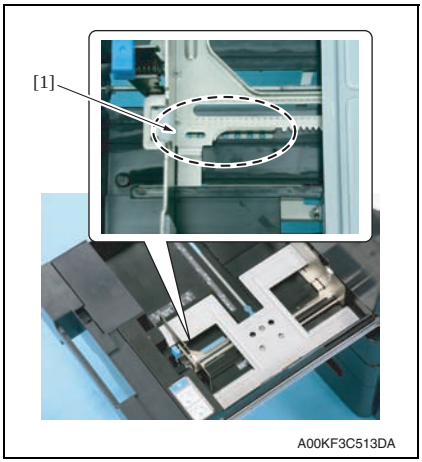

4. Remove the paper from the tray.
5. Secure the set of paper guides [1] on the tray using a screw (M3 x 8 mm: V121 0308 04).

18.1.2 Centering adjustment of the tray 1, 2

This adjustment must be made in the following case:

- **When an image printed on a print is displaced from the correct position with the use of the tray1/2.**

1. Make a test print and check the amount of misalignment.
2. Pull out the tray where this adjustment is made.

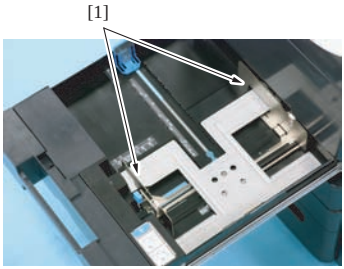

A00JF3C002DA

3. Stretch the paper guide [1] to the maximum size position.

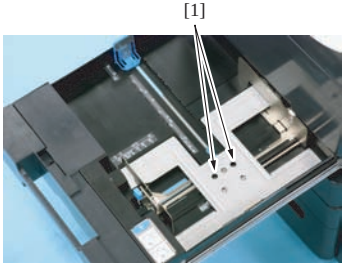

A00JF3C003DA

4. Loosen two screws [1].

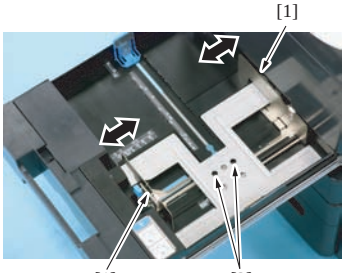

A00JF3C004DA

5. Move the paper guide [1] complete according to the amount of the mis-centering you checked in step 1 and adjust the center position of it.
6. Tighten two screws [2].
7. Make another test print and check the amount of misalignment.

18.1.3 Adjustment of the manual bypass tray paper size unit

This adjustment must be made in the following case:

- **The bypass paper size unit has been removed.**

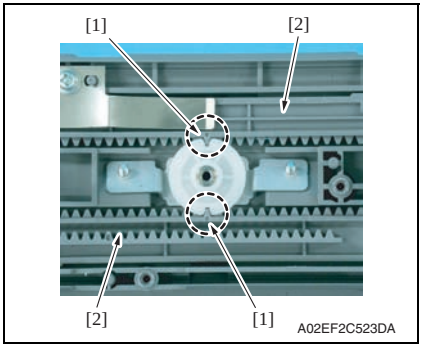

1. Align the match mark [1] on the bypass guide rack gear with the groove on the gear rim at two places and install two bypass guide rack gears [2].

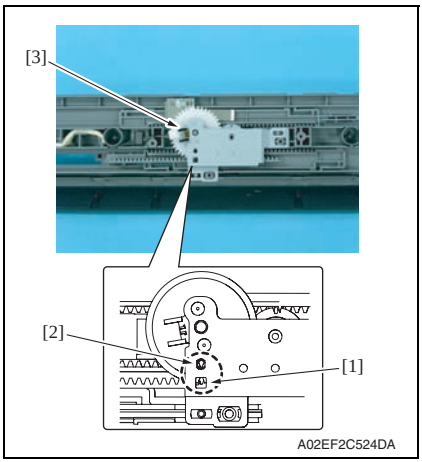

2. When installing the manual CD size sensor assy [3], make sure that the part [1] (pointed by the arrow) on the bypass guide rack gear and the gear's hole [2] on the manual CD size sensor assy are placed in a straight line.
3. Secure the manual CD size sensor assy with two screws.
4. After the bypass paper size unit base has been mounted, check that the lever of the bypass paper size unit moves smoothly in a manner operatively connected to the bypass guide.
5. Call the Service Mode to the screen and select [Machine] → [Manual Bypass Tray Adjustment]. Then, carry out manual bypass tray adjustment.
See P.316

18.2 PH unit mechanical adjustment

18.2.1 Skew adjustment

This adjustment must be made in the following case:

- **When PH unit is replaced.**

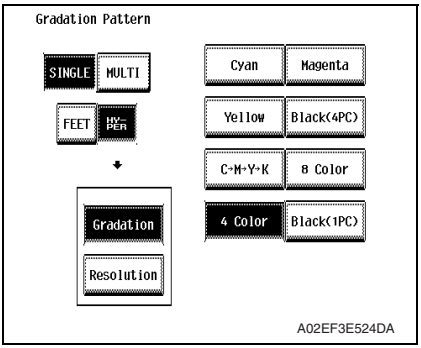

1. Turn ON the power switch.
2. Select [Service Mode] → [Test Mode] → [Gradation Pattern] and output the test pattern with the following conditions.

Conditions: SINGLE, HYPER, Gradation, 4 Color

3. Using the output test pattern, check if each color of CMYK is printed in correct pattern.
   If the pattern is not correct, any troubles such as connecting failure in PH unit of the corresponding color may occur, which should be modified.
   If there is not any problem, proceed to step 4.
4. Click [Service Mode] → [Imaging Process Adjustment] → [Stabilizer] → [Initialize + Image Stabilization].
5. After image stabilization is completed, display [Service Mode] → [State Confirmation] → [Color Regist] and check if the Step Value: X of each color C, M, Y, is within the specification.

Specification: within ± 4

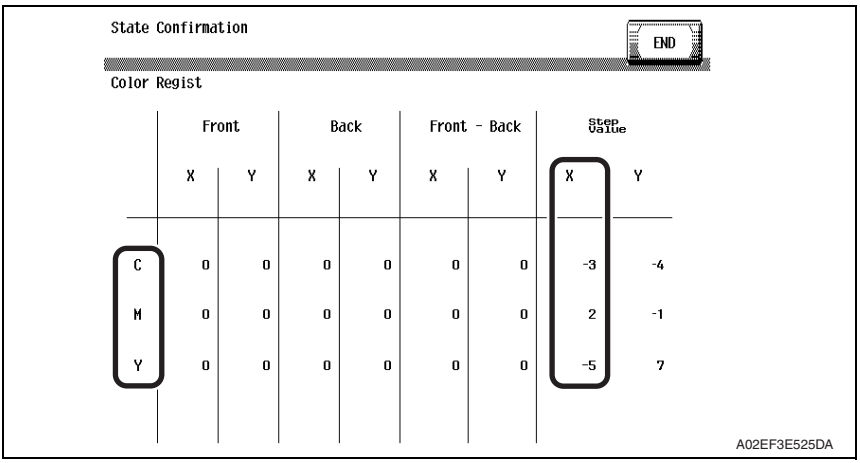

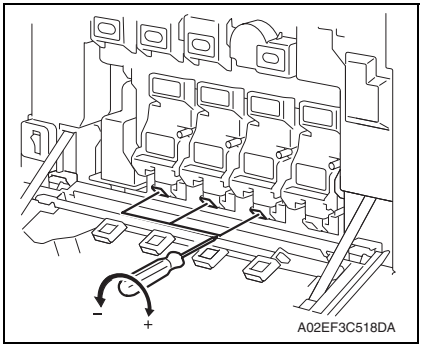

- If either value is out of the specification, follow the procedures shown below to adjust it to satisfy the specification.
- If the value of all color, C, M, Y satisfy the specification, proceed to step 10.

6. Open the front door.

7. Turn the skew adjustment dial of the corresponding PH with flathead screwdriver.

- To the left : When the step value goes - direction
- To the right : When the step value goes + direction

<Adjustment sample>

If the yellow value, among the step values confirmed in step 5, is [-5], which means out of the specification, turn the skew adjustment dial of PH (yellow) to the left (- direction) for 5 clicks.

NOTE

- **Do not execute the skew adjustment of black PH unit.**

8. Close the front door and click [Imaging Process Adjustment] → [Stabilizer] → [Initialize + Image Stabilization].

9. After image stabilization is completed, display [Service mode] → [State Confirmation] → [Color Regist] again and check if the step value: X of each color C, M, Y is within the specification.

NOTE

- **Each color's Step value displayed on [Color Regist] changes every time the image stabilization is conducted. Therefore the value may change even if skew adjustment is not made.**

- If either value is out of the specification, repeat step 6 to 9 to continue the adjustment until all C, M, Y colors satisfy the specification.

10. Exit the Service Mode.

Blank Page

Troubleshooting

19. Jam display

19.1 Misfeed display

- When a paper misfeed occurs, the LED line lights up red steadily and the misfeed message is displayed on the control panel of the machine.

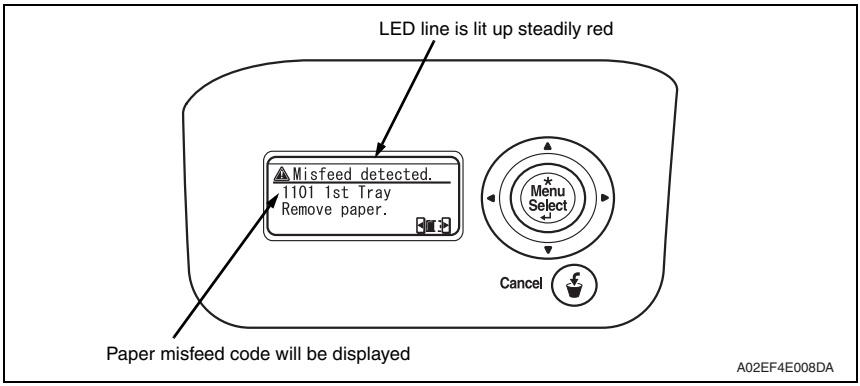

Code *1	Jam type	Misfeed processing location	Action
1101	Misfeed at tray 1 feed section	Right door	P.399
1201	Misfeed at tray 2 feed section	Vertical transport door	P.400
1301	See P.25 of the PC-104/204 service manual.		
2001			
1401			
2001			
1501	See P.33 of the PC-405 service manual.		
2001			
1001	Misfeed at manual bypass feed section	Right door	P.401
9201	Misfeed at duplex pre-registration section	Right door, duplex door	P.402
2001	Misfeed at vertical transport section	Right door, vertical transport door	P.403
3001	2nd image transfer section	Right door	P.404
3201	Misfeed at exit section	Right door	P.405
9301	Misfeed at duplex transport section	Duplex door	P.406
⚠1 9901	Controller jam	—	P.407
7216	See P.75 of the FS-519/PK-515/OT-602 service manual. See P.63 of the FS-609/PK-501 service manual.		
⚠1 7218			
7221			
7281			
7243	See P.75 of the FS-519/PK-515/OT-602 service manual.		
7221	See P.39 of the SD-505 service manual.		
⚠1 7225	See P.39 of the SD-505 service manual. See P.63 of the FS-609/PK-501 service manual.		
7284	See P.39 of the SD-505 service manual.		
7285			
7290	See P.11 of the MT-502 service manual.		

*1: JAM code is displayed at [Paper Jam History] under [Counter] available from Service Mode. It is also described in the paper jam history of the machine management list. Regarding jam at paper exit options, jam codes are available by selecting [Service Mode] → [Counter] → [JAM]. To identify misfeed locations, use the jam codes and refer to the above list.

19.1.1 Misfeed display resetting procedure

- Open the corresponding door, clear the sheet of paper misfed, and close the door.

19.2 Sensor layout

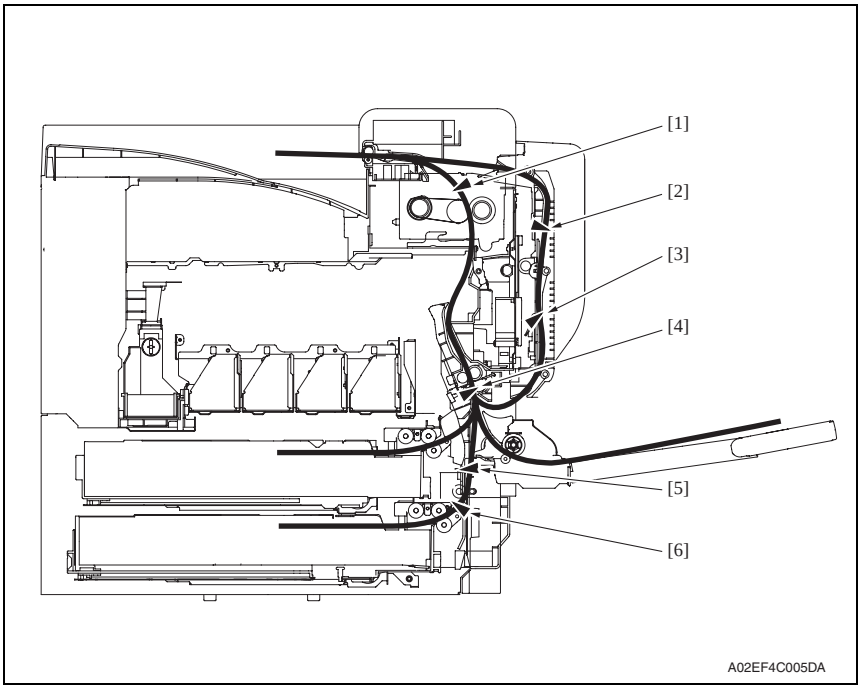

[1]	Paper exit sensor	PS25	[4]	Sensor in front of tim. roller	PS23
[2]	Duplex paper passage sensor/1	PS33	[5]	Paper feed tray 2 vertical transport sensor	PS16
[3]	Duplex paper passage sensor/2	PS34	[6]	Paper feed tray 2 paper feed sensor	PS14

19.3 Solution

19.3.1 Initial check items

- When a paper misfeed occurs, first perform the following initial check items.

Check item	Action
Does paper meet product specifications?	Replace paper.
Is the paper curled, wavy, or damp?	Replace paper.
Is a foreign object present along the paper path, or is the paper path deformed or worn?	Clean the paper path and replace if necessary.
Are rolls/rollers dirty, deformed, or worn?	Clean or replace the defective roll/roller.
Are the edge guide and trailing edge stop at the correct position to accommodate the paper?	Set as necessary.
Are the actuators operating correctly?	Correct or replace the defective actuator.

19.3.2 Solution when paper curl occurs

Step	Check items/actions		
1	Turn over the stacked paper in the paper tray.	OK	—
		NG	Go to step 2.
2	Does paper curl occur just after a warm-up has been completed or the sleep mode has been turned OFF?	YES	Go to step 3.
	Does paper curl occur under normal conditions (under conditions other than those mentioned above)?	YES	Go to step 5.
3	*1.* Call the Service Mode to the screen. *2.* Select [System 1] → [Change Warm Up Time]. *3.* Change the setting to [Mode3]. See P.344	OK	—
		NG	Go to step 4.
4	*1.* Call the Service Mode to the screen. *2.* Select [System 1] → [Change Warm Up Time]. *3.* Change the setting to [Mode4]. See P.344	—	—
5	*1.* Call the Service Mode to the screen. *2.* Select [Machine] → [Fusing Temperature]. *3.* Select a paper type. *4.* Change the temperature of Heater Roller to [-10 °C]. See P.305	OK	—
		NG	Go to step 6
6	*1.* Call the Service Mode to the screen. *2.* Select [Machine] → [Fusing Temperature]. *3.* Select a paper type. *4.* Change the temperature of Heater Roller to [-20 °C]. See P.305	—	—

19.3.3 Misfeed at tray 1 feed section

A. Detection timing

Type	Description
Detection of misfeed at tray 1 feed section	• The leading edge of the paper does not turn ON the sensor in front of tim. roller (PS23) even after the lapse of a given period of time after the tray 1 starts to feed paper.
Detection of paper left in tray 1 feed section	• The paper feed tray 1 chain feed sensor (PS1) is turned ON when the power switch is turned ON, a door or cover is opened and closed, or a misfeed or malfunction is reset.
Tray 1 feed section loop registration reversing jam	• For paper fed from the tray 1, due to a delay in paper arrival, loop forming in front of the timing roller is not complete before the rise timing of the transport motor (M1).
Tray 1 feed section TOD permit waiting jam	• For paper fed from the tray 1, TOD permit continues to be disabled for a predetermined period of time after the timing of TOD output.

B. Action

Relevant parts	
Transport motor (M1) Paper feed tray 1 paper feed clutch (CL1) Paper feed tray 1 chain feed sensor (PS1) Sensor in front of tim. roller (PS23)	Printer control board (PRCB)

Step	Action	WIRING DIAGRAM	
		Control signal	Location (Electrical component)
1	Initial check items	—	—
2	PS1 I/O check, sensor check	PRCB CN12PRCB-8 (ON)	D-8 to 9
3	PS23 I/O check, sensor check	PRCB CN1PRCB-3 (ON)	D-18
4	CL1 operation check	PRCB CN12PRCB-11 (ON)	D-9
5	M1 operation check	PRCB CN34PRCB-10 (REM) PRCB CN34PRCB-13 (LOCK)	D-22
6	Change PRCB	—	—

19.3.4 Misfeed at tray 2 feed section

A. Detection timing

Type	Description
Detection of misfeed at tray 2 feed section	• The leading edge of the paper does not unblock the paper feed tray 2 vertical transport sensor (PS16) even after the lapse of a given period of time after the tray 2 starts to feed paper.
Detection of paper left in tray 2	• The paper feed tray 2 vertical transport sensor (PS16) is unblocked when the power switch is turned ON, a door or cover is opened and closed, or a misfeed or malfunction is reset. • The paper feed tray 2 paper feed sensor (PS14) is unblocked when the power switch is turned ON, a door or cover is opened and closed, or a misfeed or malfunction is reset.
Tray 2 feed section TOD permit waiting jam	• For paper fed from the tray 2, TOD permit continues to be disabled for a predetermined period of time after the timing of TOD output.

B. Action

Relevant parts	
Transport motor (M1) Paper feed tray 2 paper feed clutch (CL2) Paper feed tray 2 vertical transport clutch (CL3) Paper feed tray 2 paper feed sensor (PS14) Paper feed tray 2 vertical transport sensor (PS16)	Printer control board (PRCB)

Step	Action	WIRING DIAGRAM	
		Control signal	Location (Electrical component)
1	Initial check items	—	—
2	PS14 I/O check, sensor check	PRCB CN9PRCB-8 (ON)	D-10
3	PS16 I/O check, sensor check	PRCB CN9PRCB-11 (ON)	D-10
4	CL2 operation check	PRCB CN9PRCB-19 (ON)	D-11
5	CL3 operation check	PRCB CN9PRCB-17 (ON)	D-10 to 11
6	M1 operation check	PRCB CN34PRCB-10 (REM) PRCB CN34PRCB-13 (LOCK)	D-22
7	Change PRCB	—	—

19.3.5 Misfeed at manual bypass feed section

A. Detection timing

Type	Description
Detection of misfeed at manual bypass feed section	• The leading edge of the paper does not turn ON the sensor in front of tim. roller (PS23) even after the lapse of a given period of time after the manual bypass tray starts to feed paper.
Manual bypass feed section loop registration reversing jam	• For paper fed from the manual bypass, loop forming has not been complete before a sheet enters the timing roller because the rise timing of load to perform registration is earlier than the rise timing of load to form a loop.
Manual bypass feed section TOD permit waiting jam	• For paper fed from the manual bypass, TOD permit continues to be disabled for a predetermined period of time after the timing of TOD output.

B. Action

Relevant parts	
Transport motor (M1) Manual paper feed clutch (CL4) Sensor in front of tim. roller (PS23)	Printer control board (PRCB)

Step	Action	WIRING DIAGRAM	
		Control signal	Location (Electrical component)
1	Initial check items	—	—
2	PS23 I/O check, sensor check	PRCB CN1PRCB-3 (ON)	D-18
3	CL4 operation check	PRCB CN6PRCB-2 (ON)	D-1
4	M1 operation check	PRCB CN34PRCB-10 (REM) PRCB CN34PRCB-13 (LOCK)	D-22
5	Change PRCB	—	—

19.3.6 Misfeed at duplex pre-registration section

A. Detection timing

Type	Description
Detection of misfeed at duplex pre-registration section	• The leading edge of the paper does not turn ON the sensor in front of tim. roller (PS23) even after the lapse of a given period of time after a duplex paper feed sequence has been started.
Duplex pre-registration section loop registration reversing jam detection	• For the second-side feed of paper in the duplex mode, loop forming has not been complete before the second side of a sheet enters the timing roller because the rise timing of load to perform registration is earlier than the rise timing of load to form a loop.
Duplex pre-registration section TOD permit waiting jam	• For the second-side feed of paper in the duplex mode, TOD permit continues to be disabled for a predetermined period of time after the timing of TOD output.

B. Action

Relevant parts	
Transport motor (M1) Duplex transport motor (M7) Sensor in front of tim. roller (PS23)	Printer control board (PRCB)

Step	Action	WIRING DIAGRAM	
		Control signal	Location (Electrical component)
1	Initial check items	—	—
2	PS23 I/O check, sensor check	PRCB CN1PRCB-3 (ON)	D-18
3	M1 operation check	PRCB CN34PRCB-10 (REM) PRCB CN34PRCB-13 (LOCK)	D-22
4	M7 operation check	PRCB CN4PRCB-1 to 4	D-3
5	Change PRCB	—	—

19.3.7 Misfeed at tray 2 vertical transport section

A. Detection timing

Type	Description
Detection of misfeed at vertical transport section	• The leading edge of the paper does not turn ON the sensor in front of tim. roller (PS23) even after the lapse of a given period of time after the paper has blocked the paper feed tray 2 vertical transport sensor (PS16). • The paper feed tray 2 vertical transport sensor (PS16) is not unblocked even after the lapse of a given period of time after the paper has blocked the PS16.
Vertical transport section loop registration reversing jam	• For paper fed from the tray 2, loop forming has not been complete before a sheet enters the timing roller because the rise timing of load to perform registration is earlier than the rise timing of load to form a loop.

B. Action

Relevant parts	
Transport motor (M1) Paper feed tray 2 vertical transport clutch (CL3) Paper feed tray 2 vertical transport sensor (PS16) Sensor in front of tim. roller (PS23)	Printer control board (PRCB)

Step	Action	WIRING DIAGRAM	
		Control signal	Location (Electrical component)
1	Initial check items	—	—
2	PS16 I/O check, sensor check	PRCB CN9PRCB-11 (ON)	D-10
3	PS23 I/O check, sensor check	PRCB CN1PRCB-3 (ON)	D-18
4	CL3 operation check	PRCB CN9PRCB-17 (ON)	D-10 to 11
5	M1 operation check	PRCB CN34PRCB-10 (REM) PRCB CN34PRCB-13 (LOCK)	D-22
6	Change PRCB	—	—

19.3.8 Misfeed at 2nd image transfer section

A. Detection timing

Type	Description
Detection of misfeed at 2nd image transfer section	• A sheet of paper does not turn OFF the sensor in front of tim. roller (PS23) after a predetermined period of time has elapsed since the sheet has turned ON the PS23. • A sheet of paper does not turned ON the paper exit sensor (PS25) after a predetermined period of time has elapsed since the sheet has turned ON the sensor in front of tim. roller (PS23).
Detection of paper left in 2nd image transfer section	• The sensor in front of tim. roller (PS23) is turned ON when the power switch is turned ON, a door or cover is opened and closed, or a misfeed or malfunction is reset.
2nd image transfer section loop registration reversing jam	• For paper fed from the tray, loop forming has not been complete before a sheet enters the timing roller because the rise timing of load to perform registration is earlier than the rise timing of load to form a loop.

B. Action

Relevant parts	
Transport motor (M1) Fusing motor (M5) Tim. roller clutch (CL6) Sensor in front of tim. roller (PS23) Paper exit sensor (PS25)	Printer control board (PRCB)

Step	Action	WIRING DIAGRAM	
		Control signal	Location (Electrical component)
1	Initial check items	—	—
2	PS23 I/O check, sensor check	PRCB CN1PRCB-3 (ON)	D-18
3	PS25 I/O check, sensor check	—	—
4	CL6 operation check	PRCB CN1PRCB-5 (ON)	D-17
5	M1 operation check	PRCB CN34PRCB-10 (REM) PRCB CN34PRCB-13 (LOCK)	D-22
6	M5 operation check	PRCB CN34PRCB-2 (REM) PRCB CN34PRCB-5 (LOCK)	D-21
7	Change PRCB	—	—

19.3.9 Misfeed at exit section

A. Detection timing

Type	Description
Detection of misfeed at exit section	• The paper exit sensor (PS25) is not turned OFF even after the lapse of a given period of time after the paper has turned ON the PS25. • The paper exit sensor (PS25) is not turned ON even after the lapse of a given period of time after the switchback sequence is started. • The duplex paper passage sensor/1 (PS33) is not turned ON even after the lapse of a given period of time after the switchback sequence is started.
Detection of paper left in exit section	• The paper exit sensor (PS25) is turned ON when the power switch is turned ON, a door or cover is opened and closed, or a misfeed or malfunction is reset.

B. Action

Relevant parts	
Transport motor (M1) Fusing motor (M5) Switchback motor (M6) Duplex transport motor (M7) Paper exit sensor (PS25) Duplex paper passage sensor/1 (PS33)	Printer control board (PRCB)

Step	Action	WIRING DIAGRAM	
		Control signal	Location (Electrical component)
1	Initial check items	—	—
2	PS25 I/O check, sensor check	—	—
3	PS33 I/O check, sensor check	PRCB CN4PRCB-7 (ON)	D-4
4	M1 operation check	PRCB CN34PRCB-10 (REM) PRCB CN34PRCB-13 (LOCK)	D-22
5	M5 operation check	PRCB CN34PRCB-2 (REM) PRCB CN34PRCB-5 (LOCK)	D-21
6	M6 operation check	PRCB CN40PRCB-10 to 13	D-18
7	M7 operation check	PRCB CN4PRCB-1 to 4	D-3
8	Change PRCB	—	—

19.3.10 Misfeed at duplex transport section

A. Detection timing

Type	Description
Detection of misfeed at duplex transport section	• A sheet of paper does not unblock the duplex paper passage sensor/2 (PS34) after a predetermined period of time has elapsed since the sheet blocks the duplex paper passage sensor/1 (PS33). • A sheet of paper does not unblock the duplex paper passage sensor/1 (PS33) after a predetermined period of time has elapsed since the sheet blocks PS33. • A sheet of paper does not block the duplex paper passage sensor/2 (PS34) after a predetermined period of time has elapsed since the sheet unblocks PS34.
Detection of paper left in duplex transport section	• The duplex paper passage sensor/1 (PS33) is blocked, or the duplex paper passage sensor/2 (PS34) is unblocked when the power switch is turned ON, a door or cover is opened and closed, or a misfeed or malfunction is reset.

B. Action

Relevant parts	
Switchback motor (M6) Duplex transport motor (M7) Duplex paper passage sensor/1 (PS33) Duplex paper passage sensor/2 (PS34)	Printer control board (PRCB)

Step	Action	WIRING DIAGRAM	
		Control signal	Location (Electrical component)
1	Initial check items	—	—
2	PS33 I/O check, sensor check	PRCB CN4PRCB-7 (ON)	D-4
3	PS34 I/O check, sensor check	PRCB CN4PRCB-10 (ON)	D-4
4	M6 operation check	PRCB CN40PRCB-10 to 13	D-18
5	M7 operation check	PRCB CN4PRCB-1 to 4	D-3
6	Change PRCB	—	—

19.3.11 Controller jam

A. Detection timing

Type	Description
Controller jam	• A control erratic operation as it relates to the duplex unit occurs.
	• A stop command (a command to effect a forced stop) is received.
	• A media error (wrong type or size of paper) occurs during a 2-sided print cycle.

B. Action

Relevant parts	
MFP board (MFPB)	Printer control board (PRCB)

Step	Action	WIRING DIAGRAM	
		Control signal	Location (Electrical component)
1	Initial check items	—	—
2	Check for the paper left in the machine.	—	—
3	Check to see if the size or type of the paper specified on the control panel or printer driver coincides with that of the paper actually loaded.	—	—
4	One possible cause is a control erratic operation. So, turn OFF and ON the power switch and run the print cycle again.	—	—
5	Upgrade the firmware.	—	—
6	Change PRCB	—	—
7	Change MFPB	—	—

20. Malfunction code

20.1 Alert code

- The machine's CPU performs a self-diagnostics function that, on detecting a malfunction, displays the corresponding warning code on the control panel.

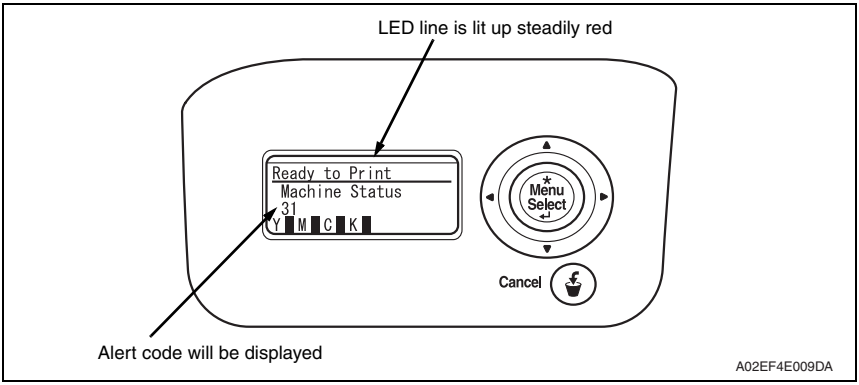

20.1.1 Alert code list

- If a stabilization-related fault occurs, the numeral portion of the corresponding warning code appears.

Code	Item	Description
P-5	IDC sensor (front) failure	• When adjusting the IDC sensor, output voltage detected for all sample patterns are specified value or more. • When adjustment is complete, sensor's output voltage with selected light intensity is specified value or under. • During image stabilization (gamma correction control), detected output value for IDC sensor did not go below threshold (half the value of what is detected by IDC sensor on the belt surface) for three consecutive times (position of the pattern end is not detected). • During image stabilization (gamma correction control), sensor's output value of each color for hyper 0 gradation after the primary approximation is half the detection level on the belt surface or under
P-28	IDC sensor (rear) failure	
P-6	Cyan imaging unit failure	• All density readings taken from the density pattern produced on the transfer belt are 1.0 g/m^2 (IDC sensor photo receiver output) or less during max. density adjustment (Vg/Vdc adjustment).
P-7	Magenta imaging unit failure	
P-8	Yellow imaging unit failure	
P-9	Black imaging unit failure	
P-21	Color regist test pattern failure	• The number of points detected in the main scan direction is more or less than the specified value during main scan direction registration correction. • The number of points detected in the sub scan direction is more or less than the specified value during sub scan direction registration correction.

Code	Item	Description
P-22	Color regist adjust failure	• The color shift amount is greater than the specified range during main scan direction registration correction. • The color shift amount is greater than the specified range during sub scan direction registration correction. • On the color shift test pattern, the maximum and minimum deviations detected in the main and sub scan directions go over the predetermined value.
P-27	Secondary transfer ATVC failure	• An abnormal average value is detected during an adjustment of the second image transfer ATVC value.
P-30	Color PC drive sensor malfunction	• The output from the color PC drive main and sub sensors remains unchanged for a continuous period of 1,000 ms while the color PC motor is turning stably and the lock signal is active (LOW-0).
P-31	Black PC drive sensor malfunction	• The output from the black PC drive main and sub sensors remains unchanged for a continuous period of 1,000 ms while the transport motor is turning stably and the lock signal is active (LOW-0).

20.2 Solution

20.2.1 P-5: IDC sensor (front) failure

20.2.2 P-28 IDC sensor (rear) failure

Relevant parts	
IDC registration sensor/MK (IDCS/MK) IDC registration sensor/YC (IDCS/YC)	Printer control board (PRCB) High voltage unit (HV) Transfer belt unit

Step	Action
1	Wipe clean the surface of the transfer belt with a soft cloth, if it is dirty.
2	Change the image transfer belt unit if the transfer belt is damaged.
3	Reinstall or reconnect IDCS/MK or IDCS/YC, sensor shutter or connector, if it is installed or connected improperly.
4	Clean IDCS/MK or IDCS/YC if it is dirty.
5	Check the HV connector for proper connection and correct as necessary.
6	Open/close the front door, run an image stabilization sequence, and select [State Confirmation] → [Level History1] to check the IDC value. IDC1: IDCS/MK, IDC2: IDCS/CY If the value is 1.0 V or less, change IDCS/MK or IDCS/CY.
7	Change PRCB.

20.2.3 P-6: Cyan imaging unit failure

20.2.4 P-7: Magenta imaging unit failure

20.2.5 P-8: Yellow imaging unit failure

20.2.6 P-9: Black imaging unit failure

Relevant parts	
Imaging unit /C Imaging unit /M Imaging unit /Y Imaging unit /K	Transfer belt unit High voltage unit (HV) Printer control board (PRCB)

Step	Action
1	Select [Imaging Process Adjustment] → [D Max Density] and, if the setting value is negative, readjust.
2	Check the drive transmission portion of the Imaging Unit and correct as necessary.
3	Clean the IDC registration sensor/MK (IDCS/MK) or IDC registration sensor/CY (IDCS/CY) window if dirty.
4	Clean the contact of the imaging unit connector if dirty.
5	Check the HV connector for proper connection and correct as necessary.
6	Change imaging unit.
7	Change the transfer belt unit.
8	Change PRCB.

20.2.7 P-21: Color regist test pattern failure

Relevant parts	
Transfer belt unit PH unit	Printer control board (PRCB)

Step	Action
1	Wipe clean the surface of the transfer belt with a soft cloth, if it is dirty.
2	Change the image transfer belt unit if the transfer belt is damaged.
3	Change the PH unit.
4	Change PRCB.

20.2.8 P-22: Color regist adjust failure

Relevant parts	
IDC registration sensor /MK (IDCS/MK) IDC registration sensor/CY (IDCS/CY)	Printer control board (PRCB)

Step	Action
1	Slide out the imaging unit and reinstall it in position.
2	Reinstall or reconnect IDCS/MK or IDCS/CY if it is installed or connected improperly.
3	Check the vertical transport guide for installed position and correct as necessary.
4	Change PRCB.

20.2.9 P-27: Secondary transfer ATVC failure

Relevant parts	
High voltage unit (HV) Printer control board (PRCB)	Image transfer entrance guide 2nd image transfer assy Transfer belt unit

Step	Action
1	Check roller opposed to the 2nd image transfer roller is grounded. Clean the joint or correct if necessary.
2	Check the image transfer entrance guide for proper installation and correct if necessary.
3	Check that the spring does not come off during the pressure operation of the 2nd transfer roller and correct if necessary.
4	Check the contact at the joint of the 2nd image transfer assy and HV. Clean the joint or correct if necessary.
5	Change the transfer belt unit.
6	Change HV.
7	Change PRCB.

20.2.10 P-30: Color PC drive sensor malfunction

Relevant electrical parts	
Color PC drive main sensor (PS27) Color PC drive sub sensor (PS28)	Main drive unit Printer control board (PRCB)

Step	Action
1	Perform the faulty sensor check procedure. *1
2	Check the sensor, for which a faulty condition has been checked, for installed position and proper connector connection.
3	Wipe the sensor, for which a faulty condition has been checked, clean of dirt if any.
4	If P-30 occurs again, change the main drive unit.
5	Change PRCB.

20.2.11 P-31: Black PC drive sensor malfunction

Relevant parts	
Black PC drive main sensor (PS29) Black PC drive sub sensor (PS30)	Main drive unit Printer control board (PRCB)

Step	Action
1	Perform the faulty sensor check procedure. *1
2	Check the sensor, for which a faulty condition has been checked, for installed position and proper connector connection.
3	Wipe the sensor, for which a faulty condition has been checked, clean of dirt if any.
4	If P-31 persists, change the main drive unit.
5	Change PRCB.

*1: Faulty sensor check procedure

1. Set the service jig and call the Service Mode to screen.
See P.298
2. Access [State Confirmation] → [Sensor Check].
3. Close the front door and start [Stabilizer].
4. During the stabilizer sequence, check to see if the values of the phase detection sensors (black PC drive main/sub sensors) change.
5. A sensor is faulty if its value does not change.

20.3 Trouble code

- The machine's CPU performs a self-diagnostics function that, on detecting a malfunction, displays the corresponding malfunction code on the control panel.

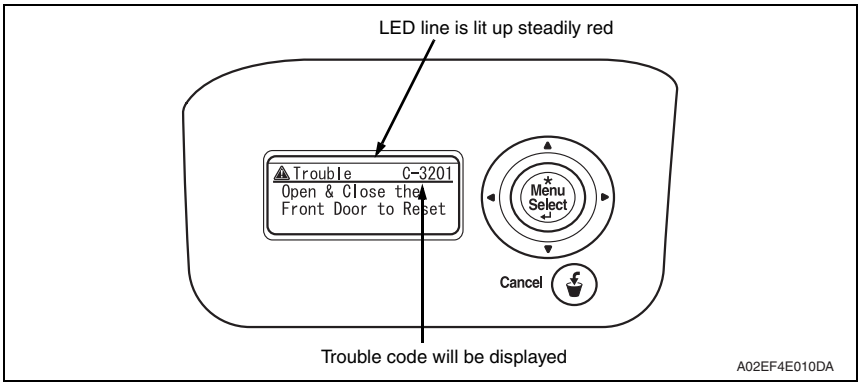

20.3.1 Trouble code list

* For the details of the malfunction codes of the options, see the Service Manual for the corresponding option.

Code	Item	Detection timing	Trouble isolation compliant unit	Rank
C0001	LCT connection failed	See P.38 of the PC-405 service manual.	—	C
C0202	Tray 1 feeder up/down abnormality	• The paper feed tray 1 upper limit sensor is not blocked even after the lapse of a given period of time after the lifting motion has been started.	Tray 1	B
C0204	Tray 2 feeder up/down abnormality	• The paper feed tray 2 upper limit sensor is not blocked even after the lapse of a given period of time after the lifting motion has been started.	Tray 2	B
C0206	Tray 3 feeder up/down abnormality	See P.30 of the PC-104/204 service manual.	Tray 3	B
C0208	Tray 4 feeder up/down abnormality		Tray 4	B
C0209	LCT elevator motor malfunction	See P.38 of the PC-405 service manual.	LCT	B
C0210	LCT ascent motion failure		LCT	B

	Code	Item	Detection timing	Trouble isolation compliant unit	Rank
	C0211	Manual feed up/down abnormality	• The manual lift-up position sensor is not unblocked even when the transport motor has turned for a given number of pulses after the sequence to move the paper lifting plate from the standby position to the feed position was started. • The manual lift-up position sensor is not blocked even when the transport motor has turned for a given number of pulses after the sequence to move the paper lifting plate from the feed position to the standby position was started.	manual	B
	C0212	LCT ejection failure	See P.38 of the PC-405 service manual.	LCT	B
	C0213	LCT shift gate malfunction		LCT	B
	C0214	LCT shifting failure		LCT	B
	C0215	LCT shift motor malfunction		LCT	B
	C0301	Suction fan motor's failure to turn	• The fan lock signal remains HIGH for a predetermined continuous period of time while the motor remains stationary.	—	B
	C1004	FNS communication error	See P.81 of the FS-519/PK-515/OT-602 service manual.	—	C
1	C1180	Transport system drive malfunctions	See P.69 of the FS-609/PK-501 service manual.	—	B
1	C1181	Paddle motor malfunctions		—	B
	C1182	Unsupported option trouble			
1	C1183	Finishing option elevator drive malfunction	See P.81 of the FS-519/PK-515/OT-602 service manual. See P.69 of the FS-609/PK-501 service manual.	—	B
	C1190	Finishing option aligning bar moving mechanism malfunction 1	See P.81 of the FS-519/PK-515/OT-602 service manual.	—	B
	C1191	Finishing option aligning bar moving mechanism malfunction 2		—	B
1	C1192	Front aligning plate motor malfunctions	See P.69 of the FS-609/PK-501 service manual.	—	B
1	C1193	Rear aligning plate motor malfunctions		—	B
	C11A0	Paper holding drive failure	See P.81 of the FS-519/PK-515/OT-602 service manual.	—	B
	C11A1	Finishing option exit roller pressure/retraction failure		—	B
	C11A2	Saddle exit roller pressure/retraction failure	See P.44 of the SD-505 service manual.	—	B
	C11A3	Shutter drive failure	See P.81 of the FS-519/PK-515/OT-602 service manual.	—	B

	Code	Item	Detection timing	Trouble isolation compliant unit	Rank
⚠1	C11A4	Saddle exit motor failure Booklet exit motor malfunctions	See P.44 of the SD-505 service manual. See P.69 of the FS-609/PK-501 service manual.	—	B
	C11A5	Saddle in & out guide motor failure	See P.44 of the SD-505 service manual.	—	B
	C11A6	Saddle layable guide drive failure		—	B
	C11B0	Finishing option stapler unit CD drive failure	See P.81 of the FS-519/PK-515/OT-602 service manual.	—	B
⚠1	C11B1	Stapler unit slide motor malfunctions	See P.69 of the FS-609/PK-501 service manual.	—	B
	C11B2	Finishing option stapling mechanism malfunction 1	See P.81 of the FS-519/PK-515/OT-602 service manual.	—	B
⚠1	C11B4	Stapler/folding motor malfunctions	See P.69 of the FS-609/PK-501 service manual.	—	B
	C11B5	Side staple 1 drive failure	See P.44 of the SD-505 service manual.	—	B
	C11B6	Side staple 2 drive failure		—	B
	C11C0	Punch motor malfunction	See P.81 of the FS-519/PK-515/OT-602 service manual.	—	B
⚠1	C11C1	Punch control board malfunctions	See P.69 of the FS-609/PK-501 service manual.	—	C
⚠1	C11C2	Punch side registration motor malfunctions		—	C
⚠1	C11C3	Punch motor malfunctions		—	C
⚠1	C11C5	Punch sensor malfunctions		—	C
	C11D0	Crease motor drive failure	See P.44 of the SD-505 service manual.	—	B
	C11E0	Unsupported option trouble			
	C1301	Finishing option cooling fan motor failure	See P.81 of the FS-519/PK-515/OT-602 service manual.	—	B
⚠1	C1401	Backup RAM failure	See P.69 of the FS-609/PK-501 service manual.	—	C
	C2151	Secondary transfer roller pressure welding alienation	• During a retraction operation of the 2nd image transfer roller, the 2nd image transfer welding alienation sensor cannot detect the 2nd image transfer roller at its retracted position within a predetermined period of time after the 2nd image transfer retraction motor starts rotating. • During a pressure operation of the 2nd image transfer roller, the 2nd image transfer welding alienation sensor cannot detect the 2nd image transfer roller at its pressed position within a predetermined period of time after the 2nd image transfer retraction motor starts rotating.	—	B

Code	Item	Detection timing	Trouble isolation compliant unit	Rank
C2152	Transfer belt pressure welding alienation	• During a retraction operation of the transfer belt, the transfer belt retraction sensor cannot detect the transfer belt at its retracted position within a predetermined period of time after the transfer belt retraction clutch is turned ON. • During a pressure operation of the transfer belt, the transfer belt retraction sensor cannot detect the transfer belt at its pressed position within a predetermined period of time after the transfer belt clutch is turned ON.	—	B
C2164	PC charge malfunction	• When electrostatic charge output is ON, electrostatic charge leak detection system continues to detect leaks for a predetermined period of time.	—	B
C2253	Color PC motor's failure to turn	• The motor lock signal remains HIGH for a predetermined continuous period of time while the motor is turning.	—	B
C2254	Color PC motor's turning at abnormal timing	• The motor lock signal remains LOW for a predetermined continuous period of time while the motor remains stationary.	—	B
C225D	Color dev. unit engagement/disengagement failure	• The gears remain disengaged after the lapse of a predetermined period of time after the engagement operation is started by the color dev. unit engaged motor. • The gears remain engaged after the lapse of a predetermined period of time after the disengagement operation is started by the color dev. unit engaged motor.	—	B
C2351	K toner suction fan motor's failure to turn	• The motor lock signal remains HIGH for a predetermined continuous period of time while the motor is turning.	—	B
C2451	Release new transfer belt unit	• A new installation is not detected when a new transfer cleaner unit (image transfer belt unit) is installed.	—	B
C2551	Abnormally low toner density detected cyan TCR sensor	• TC ratio in the developing machine, which is determined by toner replenishing amount control mechanism, is 4 % or less for a given number of times consecutively.	—	B
C2552	Abnormally high toner density detected cyan TCR sensor	• TC ratio in the developing machine, which is determined by Toner replenishing amount control mechanism, is 11 % or more for a given number of times consecutively.	—	B
C2553	Abnormally low toner density detected magenta TCR sensor	• TC ratio in the developing machine, which is determined by toner replenishing amount control mechanism, is 4 % or less for a given number of times consecutively.	—	B

Code	Item	Detection timing	Trouble isolation compliant unit	Rank
C2554	Abnormally high toner density detected magenta TCR sensor	• TC ratio in the developing machine, which is determined by toner replenishing amount control mechanism, is 11 % or more for a given number of times consecutively. • When the connector of the TCR sensor is disconnected.	—	B
C2555	Abnormally low toner density detected yellow TCR sensor	• TC ratio in the developing machine, which is determined by toner replenishing amount control mechanism, is 4 % or less for a given number of times consecutively. • When the connector of the TCR sensor is disconnected.	—	B
C2556	Abnormally high toner density detected yellow TCR sensor	• TC ratio in the developing machine, which is determined by toner replenishing amount control mechanism, is 11 % or more for a given number of times consecutively. • When the connector of the TCR sensor is disconnected.	—	B
C2557	Abnormally low toner density detected black TCR sensor	• TC ratio in the developing machine, which is determined by toner replenishing amount control mechanism, is 4 % or less for a given number of times consecutively.	—	B
C2558	Abnormally high toner density detected black TCR sensor	• TC ratio in the developing machine, which is determined by toner replenishing amount control mechanism, is 11 % or more for a given number of times consecutively. • When the connector of the TCR sensor is disconnected.	—	B
C2559	Cyan TCR sensor adjustment failure	• TCR sensor automatic adjustment does not function properly, failing to adjust to an appropriate value.	—	B
C255A	Magenta TCR sensor adjustment failure		—	B
C255B	Yellow TCR sensor adjustment failure		—	B
C255C	Black TCR sensor adjustment failure		—	B
C2650	Main backup media access error	• The re-written data, which has been read out, checked and founded as error, is read out again and found as error. • The error was found when reading out the counter value. • The machine detects that the service EEPROM board is not loaded in position.	—	—

Code	Item	Detection timing	Trouble isolation compliant unit	Rank
C2651	EEPROM access error (IU C)	• An error was found when reading or writing data. • The error was found when reading out the counter value.	—	C
C2652	EEPROM access error (IU M)		—	C
C2653	EEPROM access error (IU Y)		—	C
C2654	EEPROM access error (IU K)		—	C
C2A01	EEPROM access error (TC C)	• An error was found when reading or writing data. • The error was found when reading out the counter value.	—	C
C2A02	EEPROM access error (TC M)		—	C
C2A03	EEPROM access error (TC Y)		—	C
C2A04	EEPROM access error (TC K)		—	C
C3101	Fusing roller separation failure	• With the fusing roller being retracted, the pulse of the fusing roller retraction sensor does not change even after the specified period of time has passed after the fusing retraction motor started rotating. • With the fusing roller being pressed, the pulse of the roller retraction sensor does not change even after the specified period of time has passed after the fusing retraction motor started rotating. • During a pressure operation of the fusing roller, the fusing roller is not at the pressed position even after the roller retraction sensor counts the specified number of pulses after the fusing retraction motor starts rotating.	—	B
C3201	Fusing motor failure to turn	• The motor lock signal remains HIGH for a predetermined continuous period of time while the motor remains stationary.	—	B
C3202	Fusing motor turning at abnormal timing	• The motor lock signal remains LOW for a predetermined continuous period of time while the motor remains stationary.	—	B
C3301	Fusing cooling fan motor/ 1 failure to turn	• The fan motor lock signal remains HIGH for a predetermined continuous period of time while the motor remains stationary.	—	B
C3302	Fusing cooling fan motor/ 2,3 failure to turn	• The fan motor lock signal remains HIGH for a predetermined continuous period of time while the motor remains stationary.	—	B

Code	Item	Detection timing	Trouble isolation compliant unit	Rank
C3421	Fusing heaters trouble (heating side)	• The temperature detected by the heating roller thermistor/C does not reach a predetermined level after the lapse of a predetermined period of time after the heating roller fusing heater lamp lights up. • The difference between the maximum and minimum temperatures detected by the heating roller thermistor/C within a predetermined period of time after the start of a warm-up cycle is below or above a predetermined value. • The temperature detected after a pressure level correction remains under a predetermined level even after the lapse of a predetermined period of time after the start of the temperature detection. • During a warm-up, a zero cross signal cannot be detected after the lapse of a predetermined period of time after the fusing heater is turned ON or OFF.	—	A
C3423	Fusing heaters trouble (pressurizing side)	• After warm-up operation starts, the fusing pressure roller thermistor does not detect a temperature as high as a predetermined one though a predetermined period of time has elapsed. • The temperature of the pressure roller remains lower than a predetermined level even after the lapse of a predetermined period of time after a temperature correction.	—	A
C3461	Release new fusing unit	• A new installation is not detected when a new fusing Unit is installed.	—	B
C3721	Fusing abnormally high temperature detection (heating side)	• The heating roller thermistor continues to detect a temperature higher than a predetermined one for a predetermined period of time. • Hard protection signal L is detected continuously over a predetermined period of time.	—	A
C3723	Fusing abnormally high temperature detection (pressurizing side)	• The temperature of the pressure roller continues to be higher than a predetermined level for a predetermined period of time after a temperature correction.	—	A
C3821	Fusing abnormally low temperature detection (heating side)	• The heating roller thermistor continues to detect a temperature lower than a predetermined one for a predetermined period of time. • In the states other than a warm-up operation, a zero cross signal cannot be detected after the lapse of a predetermined period of time after the fusing heater is turned ON or OFF. • The power supply frequency cannot be detected.	—	A

Code	Item	Detection timing	Trouble isolation compliant unit	Rank
C3823	Fusing abnormally low temperature detection (pressurizing side)	• The temperature of the pressure roller continues to be lower than a predetermined level for a predetermined period of time after a temperature correction.	—	A
C4151	Polygon motor rotation trouble (C)	• The polygon motor fails to turn stably even after the lapse of a given period of time after activating the polygon motor. • Motor lock signal detects HIGH for a given period time consecutively during the polygon motor is rotating.	—	B
C4152	Polygon motor rotation trouble (M)		—	B
C4153	Polygon motor rotation trouble (Y)		—	B
C4154	Polygon motor rotation trouble (K)		—	B
C4551	Laser malfunction (C)	• SOS signal is not detected even after the lapse of a given period of time after staring the laser output. • SOS signal is not detected for a given period of time during printing or image stabilization adjustment.	—	B
C4552	Laser malfunction (M)		—	B
C4553	Laser malfunction (Y)		—	B
C4554	Laser malfunction (K)		—	B
C5102	Transport motor's failure to turn	• The motor lock signal remains HIGH for a predetermined continuous period of time while the motor remains stationary.	—	B
C5103	Transport motor's turning at abnormal timing	• The motor lock signal remains LOW for a predetermined continuous period of time while the motor remains stationary.	—	B
C5351	Power supply cooling fan motor/1's failure to turn	• The fan lock signal remains HIGH for a predetermined continuous period of time while the motor remains stationary.	—	B
C5353	Cooling fan motor/2's failure to turn	• The fan lock signal remains HIGH for a predetermined continuous period of time while the motor remains stationary.	—	B
C5354	Exhaust fan motor's failure to turn	• The fan lock signal remains HIGH for a predetermined continuous period of time while the motor remains stationary.	—	B
C5357	Cooling fan motor/1's failure to turn	• The fan lock signal remains HIGH for a predetermined continuous period of time while the motor remains stationary.	—	B
C5371	MFP board cooling fan motor's failure to turn	• The fan lock signal remains HIGH for a predetermined continuous period of time while the motor remains stationary.	—	B
CA051	Standard controller configuration failure	• The controller of the printer control board (PRCB) is faulty.	—	C
CA052	Controller hardware error	• A controller hardware error is detected in the network I/F.	—	C
CA053	Controller start failure	• A controller start failure is detected in the controller interface.	—	C
CC151	ROM contents error upon startup (MSC)	• A fault is detected in a sequence of ROM contents check of the MSC (PRCB) during starting	—	C

Code	Item	Detection timing	Trouble isolation compliant unit	Rank
CC153	ROM contents error upon startup (PRT)	• A fault is detected in a sequence of ROM contents check of the mechanical control board (MFPB) during starting.	—	C
CC155	Finisher ROM error	See P.81 of the FS-519/PK-515/OT-602 service manual.	—	C
CC163	ROM contents error (PRT)	• The wrong model of firmware is detected in the engine during the initial connection to the engine is being checked.	—	C
CC164	ROM contents error (MSC)	• The wrong model of firmware is detected in the MFP board when the power switch is turned ON.	—	C
CD002	JOB RAM save error	• The error in save of JOB data to the memory/ hard disk and its read error are detected.	—	C
CD004	Hard disk access error	• Unable to communicate between the hard disk and printer control board (PRCB).	—	C
CD005	Hard disk error 1	• Hard disk is faulty.	—	C
CD006	Hard disk error 2		—	C
CD007	Hard disk error 3		—	C
CD008	Hard disk error 4		—	C
CD009	Hard disk error 5		—	C
CD00A	Hard disk error 6		—	C
CD00B	Hard disk error 7		—	C
CD00C	Hard disk error 8		—	C
CD00D	Hard disk error 9		—	C
CD00E	Hard disk error A		—	C
CD00F	Hard disk data transfer error	• Data transfer from the hard disk is faulty.	—	C
CD010	Hard disk unformat	• Unformatted hard disk is connected.	—	C
CD011	Hard disk out of specifications mounted	• A hard disk that falls outside the specifications is connected.	—	C
CD020	Hard disk verify error	• The data abnormality is detected by the HDD verify check.	—	C
CD030	Hard disk management information reading error	• The machine fails to read administrative information data saved in the hard disk.	—	C
CD201	File memory mounting error	• The file memory is not mounted. • The file has any abnormality.	—	C
CD202	Memory capacity discrepancy	• File memory capacity on the Printer control board (PRCB) is not enough. • File memory capacity necessary for duplex printing is not enough during Duplex unit mounting.	—	C
CD203	Memory capacity discrepancy 2	• File memory capacity on the Printer control board (PRCB) is not enough.	—	C
CD211	PCI-SDRAM DMA operation failure	• Hardware related to the transfer of memory image of the Printer control board (PRCB) fails to respond.	—	C

Code	Item	Detection timing	Trouble isolation compliant unit	Rank
CD212	Compression/extraction timeout detection	• Hardware related to the BTC compression function of the Printer control board (PRCB) fails to respond.	—	C
CD241	Encryption board setting error	• Initialization error of the encrypted ASIC is detected during the machine is starting.	—	C
CD242	Encryption board mounting error	• The faulty of the installation of encrypted ASIC is detected during the machine is starting.	—	C
CD261	USB host board failure	• When a failure is detected in USB host board included in the local interface kit. • Non-standard USB device is connected.	—	C
CD3##	NVRAM data error	• Abnormality is detected by the abnormal check of each NVRAM data.	—	—
CD370	NVRAM data multiple errors	• Multiple errors (Over 5) are detected by the abnormal check of each NVRAM data.	—	—
CD401	NACK command incorrect	• When abnormality is found in the communication of controller.	—	C
CD402	ACK command incorrect		—	C
CD403	Checksum error		—	C
CD404	Receiving packet incorrect		—	C
CD405	Receiving packet analysis error		—	C
CD406	ACK receiving timeout		—	C
CD407	Retransmission timeout		—	C
CDC##	Trouble related to security	• Contact the responsible people of KMBT before taking some countermeasures.	—	—
CE001	Abnormal message queue	• Printer control board (PRCB) is faulty.	—	C
CE002	Message and method parameter failure		—	C
CE003	Task error		—	C
CE004	Event error		—	C
CE005	Memory access error		—	C
CE006	Header access error		—	C
CE007	DIMM initialize error		—	C
CEEE1	MSC undefined malfunction occurring	• An undefined malfunction occurs in the MSC of the printer control board (PRCB).	—	C
CEEE2	Scanner section undefined malfunction	• An undefined malfunction occurs in the scanner section.	—	C
CEEE3	Engine section undefined malfunction	• An undefined malfunction occurs in the engine section (MFPB, etc.).	—	C

- The machine displays an abort code (CF###) on the control panel as it becomes unable to process tasks properly through its software control.
- When the system program is aborted, check the electrical component, unit, option, and connection relating to the specific type of the abort condition.

Code	Item		Relevant electrical components, units, and options	Rank
CF001	CT_singleList table abnormal	An exceptional instance occurred due to the unexpected Parameter in the System F/W.	• MFP board (MFPB)	C
CF002	CT_doubleList table abnormal			C
CF003	CT_doubleList table abnormal			C
CF004	CT_queue full abnormal			C
CF011	Array link abnormal			C
CF012	FAT link abnormal			C
CF013	File size abnormal			C
CF021	setDelayMessage Table OverFlow			C
CF022	procSetBootParamTcpipAddress() injustice			C
CF023	MsgQue OverFlow			C
CF031	getJobPageToIPE() page number injustice			C
CF032	getJobHDDPageToIPE() page number injustice			C
CF033	setDivTbl() limitation over			C
CF034	HDDQUEUE Over Flow			C
CF041	getAPPPtrFromAPPID() abnormal			C
CF042	getAPPIndexFromAPPID() abnormal			C
CF051	CC_InputPageEntry:operator[] page injustice			C
CF061	IdeCommand_Set() status abnormal			C
CF062	IdeCommand_Set() parameter abnormal			C
CF091	PCI ASIC1 ERROR	ASIC1 error		C
CF092	PCI ASIC2 ERROR	ASIC2 error		C
CF093	PCI ASIC4 ERROR	ASIC3 error		C
CF101	SCAN TIME OUT	Image transfer malfunctions		C
CF111	Compress TIME OUT	Compression malfunctions		C
CF112	Compress table OverFlow			C
CF113	Compress table check			C
CF121	Expand TIME OUT			C
CF122	Expand table OverFlow			C
CF123	Expand expandLine abnormal			C

Code	Item		Relevant electrical components, units, and options	Rank
CF131	Print TIME OUT	Image transfer malfunctions	• MFP board (MFPB)	C
CF201	startIRReadAnd Compress()Sequence	An exceptional instance occurred due to the unexpected parameter in the system F/W.		C
CF202	startWorkSave()Sequence abnormal			C
CF203	convAPItoIJCParameter()page abnormal			C
CF204	calcCompresserUse()CmpExpID Abnormal			C
CF211	setParameterBandColorPlane() Table OverFlow			C
CF212	convAPItoIJCParameter()page abnormal			C
CF213	calcExpandUse() CmpExpID abnormal			C
CF221	startPrintOutput outputsize zero			C
CF222	Next request comes during processing of startPrintOutput ()			C
CF223	Next request comes during processing of startWorkLoadOutput ()			C
CF614	“Output sequence” queue			C
CF624	Panel LCD date queue			C
CF704	Common data “Delete-waiting HDD accumulated job ID” queue			C
CF724	Engine/Command queue		• MFP board (MFPB)/ Engine	C
CF734	Panel/Command queue		• MFP board (MFPB)/ Control Panel	C
CF744	File memory transfer start-waiting command queue		• MFP board (MFPB)	C
CF754	File memory compression requesting command queue			C
CF764	Panel instruction delete job queue			C
CF774	Warning delete job queue			C
CF784	Application instruction delete job queue			C
CF794	Output page information for duplex back side queue			C
CF7A4	Paper feed completion output pate information queue			C
CF7B4	Exposure compaction output page information queue			C

Code	Item		Relevant electrical components, units, and options	Rank
CF7C4	Pre-discharge completion output page information queue	An exceptional instance occurred due to the unexpected parameter in the system F/W.	• MFP board (MFPB)	C
CF7D4	Touch panel coordinate data queue			C
CF7E4	Direct key data queue			C
CF802	SIO sending port...ENG		• MFP board (MFPB)/ Engine	C
CF810	SIO sending port...Jig software		• MFP board (MFPB)/Jig software connection cable	C
CF8ED	SIO sending port...EPNet		• MFP board (MFPB)	C
CF902	SIO receiving port...ENG		• MFP board (MFPB)/ Engine	C
CF910	SIO receiving port...Jig software		• MFP board (MFPB)/Jig software connection cable	C
CF9ED	SIO receiving port...EPNet		• MFP board (MFPB)	C
CFA01	getOneImgTransInfoFromTh() No applied thread	An exceptional instance occurred due to the unexpected parameter in the system F/W.		C
CFA02	chkEnableAllocExec() default error			C
CFA03	setTransBandAndRepeatNum() error			C
CFA04	Application ID error			C
CFA05	Thread selection image processing mode error			C
CFA06	getOneImgIndexNumFromTh() No applied thread			C
CFA07	setBufBandFromOut() No applied thread			C
CFA08	chkStartOutput() No applied thread			C
CFA09	rptReleaseMemResultACS() No applied thread			C
CFA10	rptEndBandTrans() No applied thread			C
CFA11	cancelTransExec() No applied thread			C
CFA12	CC_ImgTransInfo:allocTransIndex			C
CFA13	CC_MultiThreadProfile:rptBuf2MemClrEnd			C
CFA14	Thread software error		• Whole electrical components, units, and options	C
CFB00	ASIC117 first sheet DMA00		• MFP board (MFPB)	C
CFB01	ASIC117 first sheet DMA01			C
CFB02	ASIC117 first sheet DMA02			C

Code	Item	Relevant electrical components, units, and options	Rank
CFB03	ASIC117 first sheet DMA03	• MFP board (MFPB)	C
CFB04	ASIC117 first sheet DMA04		C
CFB05	ASIC117 first sheet DMA05		C
CFB06	ASIC117 first sheet DMA06		C
CFB07	ASIC117 first sheet DMA07		C
CFB08	ASIC117 first sheet DMA08		C
CFB09	ASIC117 first sheet DMA09		C
CFB0A	ASIC117 first sheet DMA10		C
CFB10	ASIC117 first sheet DMA16		C
CFB11	ASIC117 first sheet DMA17		C
CFB12	ASIC117 first sheet DMA18		C
CFB13	ASIC117 first sheet DMA19		C
CFB14	ASIC117 first sheet DMA20		C
CFB15	ASIC117 first sheet DMA21		C
CFB16	ASIC117 first sheet DMA22		C
CFB17	ASIC117 first sheet DMA23		C
CFB18	ASIC117 first sheet DMA24		C
CFB19	ASIC117 first sheet DMA25		C
CFB1A	ASIC117 first sheet DMA26		C
CFB1B	ASIC117 first sheet DMA27		C
CFB1C	ASIC117 first sheet DMA28		C
CFB1D	ASIC117 first sheet DMA29		C
CFB1E	ASIC117 first sheet DMA30		C
CFB20	Unsupported option trouble		
CFB21			
CFB22			
CFB23			
CFB24			
CFB25			
CFB26			
CFB27			
CFB28			
CFB29			
CFB2A			
CFB30			
CFB31			
CFB32			
CFB33			
CFB34			
CFB35			
CFB36			

Code	Item	Relevant electrical components, units, and options	Rank
CFB37	Unsupported option trouble		
CFB38			
CFB39			
CFB3A			
CFB3B			
CFB3C			
CFB3D			
CFB3E			
CFB40			
CFB41			
CFB42			
CFB60	ASIC117 first sheet interruption	• MFP board (MFPB)	C
CFB61	Unsupported option trouble		
CFB62			
CFB70	ASIC117 first sheet common register setting	• MFP board (MFPB)	C
CFB71	Unsupported option trouble		
CFB72			
CFB80	ASIC117 first sheet PCIBridgeDMA	• MFP board (MFPB)	C
CFB81	Unsupported option trouble		
CFB82			
CFB90	ASIC117 first sheet BTC compander/expander	• MFP board (MFPB)	C
CFB91	Unsupported option trouble		
CFB92			
CFC00	ASIC117 first sheet DMA00 error interruption	• MFP board (MFPB)	C
CFC01	ASIC117 first sheet DMA01 error interruption		C
CFC02	ASIC117 first sheet DMA02 error interruption		C
CFC03	ASIC117 first sheet DMA03 error interruption		C
CFC04	ASIC117 first sheet DMA04 error interruption		C
CFC05	ASIC117 first sheet DMA05 error interruption		C
CFC06	ASIC117 first sheet DMA06 error interruption		C
CFC07	ASIC117 first sheet DMA07 error interruption		C
CFC08	ASIC117 first sheet DMA08 error interruption		C
CFC09	ASIC117 first sheet DMA09 error interruption		C
CFC0A	ASIC117 first sheet DMA10 error interruption		C
CFC10	ASIC117 first sheet DMA16 error interruption		C
CFC11	ASIC117 first sheet DMA17 error interruption		C
CFC12	ASIC117 first sheet DMA18 error interruption		C
CFC13	ASIC117 first sheet DMA19 error interruption		C
CFC14	ASIC117 first sheet DMA20 error interruption		C
CFC15	ASIC117 first sheet DMA21 error interruption		C
CFC16	ASIC117 first sheet DMA22 error interruption		C

Code	Item	Relevant electrical components, units, and options	Rank
CFC17	ASIC117 first sheet DMA23 error interruption	• MFP board (MFPB)	C
CFC18	ASIC117 first sheet DMA24 error interruption		C
CFC19	ASIC117 first sheet DMA25 error interruption		C
CFC1A	ASIC117 first sheet DMA26 error interruption		C
CFC1B	ASIC117 first sheet DMA27 error interruption		C
CFC1C	ASIC117 first sheet DMA28 error interruption		C
CFC1D	ASIC117 first sheet DMA29 error interruption		C
CFC1E	ASIC117 first sheet DMA30 error interruption		C
CFC20	ASIC117 first sheet SDC sleep illegal access error		C
CFC21	ASIC117 first sheet watchdog timer error interruption		C
CFC22	ASIC117 first sheet underrun at image output interface 1		C
CFC23	ASIC117 first sheet overflow at image input interface		C
CFC24	ASIC117 first sheet underrun at image output interface 1		C
CFC25	ASIC117 first sheet PCI master detects target abort		C
CFC26	ASIC117 first sheet master abort by PCI master		C
CFC27	ASIC117 first sheet PCI master detects illegal setting		C
CFC28	ASIC117 first sheet PCI master detects retry error		C
CFC29	ASIC117 first sheet PCI master detects split completion byte count malfunction		C
CFC2A	ASIC117 first sheet PCI master detects split completion error message		C
CFC2B	ASIC117 first sheet unknown marker detected at JBIG core		C
CFC2C	ASIC117 SC count overflow detected at JBIG core		C
CFC2D	ASIC117 first sheet master read data parity error		C
CFC2E	ASIC117 first sheet master write data parity error		C
CFC2F	ASIC117 first sheet system error		C
CFC30	ASIC117 first sheet sleep read data parity error		C
CFC31	ASIC117 first sheet sleep write data parity error		C
CFC32	ASIC117 first sheet address parity error		C
CFC50	Unsupported option trouble		
CFC51			
CFC52			
CFC53			
CFC54			
CFC55			
CFC56			
CFC57			
CFC58			
CFC59			

Code	Item	Relevant electrical components, units, and options	Rank
CFC5A	Unsupported option trouble		
CFC60			
CFC61			
CFC62			
CFC63			
CFC64			
CFC65			
CFC66			
CFC67			
CFC68			
CFC69			
CFC6A			
CFC6B			
CFC6C			
CFC6D			
CFC6E			
CFC70			
CFC71			
CFC72			
CFC73			
CFC74	ASIC117 first sheet underrun at LCD output interface	• MFP board (MFPB)	C
CFC75	Unsupported option trouble		
CFC76			
CFC77			
CFC78			
CFC79	ASIC117 first sheet PCI master detects split completion byte count malfunctio	• MFP board (MFPB)	C
CFC7A	ASIC117 first sheet PCI master detects split completion error message		C
CFC7B	Unsupported option trouble		
CFC7C			
CFC7D			
CFC7E			
CFC7F			
CFC80			
CFC81			
CFC82			
CFCA0			
CFCA1			
CFCA2			
CFCA3			

Code	Item	Relevant electrical components, units, and options	Rank
CFCA4	Unsupported option trouble		
CFCA5			
CFCA6			
CFCA7			
CFCA8			
CFCA9			
CFCAA			
CFCAB			
CFCAC			
CFCAD			
CFCAE			
CFCAF			
CFCB0			
CFCB1			
CFCB2			
CFCB3			
CFCB4			
CFCB5			
CFCB6			
CFCB7			
CFCB8			
CFCB9			
CFCBA			
CFCBB			
CFCD0	CPS2300Great watchdog timer error	• MFP board (MFPB)	C
CFCD1	CPS2300Great local bus error		C
CFCD2	CPS2300Great sleep read data parity error		C
CFCD3	CPS2300Great sleep write data parity error		C
CFCD4	CPS2300Great address parity error		C
CFCF0	PIC3400Great watchdog timer error		C
CFCF1	PIC3400Great sleep read data parity error		C
CFCF2	PIC3400Great sleep write data parity error		C
CFCF3	PIC3400Great address parity error		C
CFD00	ASIC117 first sheet DMA00 time out		C
CFD01	ASIC117 first sheet DMA01 time out		C
CFD02	ASIC117 first sheet DMA02 time out		C
CFD03	ASIC117 first sheet DMA03 time out		C
CFD04	ASIC117 first sheet DMA04 time out		C
CFD05	ASIC117 first sheet DMA05 time out		C
CFD06	ASIC117 first sheet DMA06 time out		C
CFD07	ASIC117 first sheet DMA07 time out		C

Code	Item	Relevant electrical components, units, and options	Rank
CFD08	ASIC117 first sheet DMA08 time out	• MFP board (MFPB)	C
CFD09	ASIC117 first sheet DMA09 time out		C
CFD0A	ASIC117 first sheet DMA10 time out		C
CFD10	ASIC117 first sheet DMA16 time out		C
CFD11	ASIC117 first sheet DMA17 time out		C
CFD12	ASIC117 first sheet DMA18 time out		C
CFD13	ASIC117 first sheet DMA19 time out		C
CFD14	ASIC117 first sheet DMA20 time out		C
CFD15	ASIC117 first sheet DMA21 time out		C
CFD16	ASIC117 first sheet DMA22 time out		C
CFD17	ASIC117 first sheet DMA23 time out		C
CFD18	ASIC117 first sheet DMA24 time out		C
CFD19	ASIC117 first sheet DMA25 time out		C
CFD1A	ASIC117 first sheet DMA26 time out		C
CFD1B	ASIC117 first sheet DMA27 time out		C
CFD1C	ASIC117 first sheet DMA28 time out		C
CFD1D	ASIC117 first sheet DMA29 time out		C
CFD1E	ASIC117 first sheet DMA30 time out		C
CFD50	Unsupported option trouble		
CFD51			
CFD52			
CFD53			
CFD54			
CFD55			
CFD56			
CFD57			
CFD58			
CFD59			
CFD5A			
CFD60			
CFD61			
CFD62			
CFD63			
CFD64			
CFD65			
CFD66			
CFD67			
CFD68			
CFD69			
CFD6A			
CFD6B			

Code	Item	Relevant electrical components, units, and options	Rank
CFD6C	Unsupported option trouble		
CFD6D			
CFD6E			
CFDA0			
CFDA1			
CFDA2			
CFE00	ASIC117 first sheet DMA00 time out	• MFP board (MFPB)	C
CFE01	ASIC117 first sheet DMA01 time out		C
CFE02	ASIC117 first sheet DMA02 time out		C
CFE03	ASIC117 first sheet DMA03 time out		C
CFE04	ASIC117 first sheet DMA04 time out		C
CFE05	ASIC117 first sheet DMA05 time out		C
CFE06	ASIC117 first sheet DMA06 time out		C
CFE07	ASIC117 first sheet DMA07 time out		C
CFE08	ASIC117 first sheet DMA08 time out		C
CFE09	ASIC117 first sheet DMA09 time out		C
CFE0A	ASIC117 first sheet DMA10 time out		C
CFE10	ASIC117 first sheet DMA16 time out		C
CFE11	ASIC117 first sheet DMA17 time out		C
CFE12	ASIC117 first sheet DMA18 time out		C
CFE13	ASIC117 first sheet DMA19 time out		C
CFE14	ASIC117 first sheet DMA20 time out		C
CFE15	ASIC117 first sheet DMA21 time out		C
CFE16	ASIC117 first sheet DMA22 time out		C
CFE17	ASIC117 first sheet DMA23 time out		C
CFE18	ASIC117 first sheet DMA24 time out		C
CFE19	ASIC117 first sheet DMA25 time out		C
CFE1A	ASIC117 first sheet DMA26 time out		C
CFE1B	ASIC117 first sheet DMA27 time out		C
CFE1C	ASIC117 first sheet DMA28 time out		C
CFE1D	ASIC117 first sheet DMA29 time out		C
CFE1E	ASIC117 first sheet DMA30 time out		C
CFE50	Unsupported option trouble		
CFE51			
CFE52			
CFE53			
CFE54			
CFE55			
CFE56			
CFE57			
CFE58			

Code	Item	Relevant electrical components, units, and options	Rank
CFE59	Unsupported option trouble		
CFE5A			
CFE60			
CFE61			
CFE62			
CFE63			
CFE64			
CFE65			
CFE66			
CFE67			
CFE68			
CFE69			
CFE6A			
CFE6B			
CFE6C			
CFE6D			
CFE6E			
CFEA0			
CFEA1			
CFEA2			
CFF00	ASIC117 first sheet DMA00 time out	• MFP board (MFPB)	
CFF01	ASIC117 first sheet DMA01 time out		
CFF02	ASIC117 first sheet DMA02 time out		C
CFF03	ASIC117 first sheet DMA03 time out		C
CFF04	ASIC117 first sheet DMA04 time out		C
CFF05	ASIC117 first sheet DMA05 time out		C
CFF06	ASIC117 first sheet DMA06 time out		C
CFF07	ASIC117 first sheet DMA07 time out		C
CFF08	ASIC117 first sheet DMA08 time out		C
CFF09	ASIC117 first sheet DMA09 time out		C
CFF0A	ASIC117 first sheet DMA10 time out		C
CFF10	ASIC117 first sheet DMA16 time out		C
CFF11	ASIC117 first sheet DMA17 time out		C
CFF12	ASIC117 first sheet DMA18 time out		C
CFF13	ASIC117 first sheet DMA19 time out		C
CFF14	ASIC117 first sheet DMA20 time out		C
CFF15	ASIC117 first sheet DMA21 time out		C
CFF16	ASIC117 first sheet DMA22 time out		C
CFF17	ASIC117 first sheet DMA23 time out		C
CFF18	ASIC117 first sheet DMA24 time out		C
CFF19	ASIC117 first sheet DMA25 time out		C

Code	Item	Relevant electrical components, units, and options	Rank
CFF1A	ASIC117 first sheet DMA26 time out	• MFP board (MFPB)	C
CFF1B	ASIC117 first sheet DMA27 time out		C
CFF1C	ASIC117 first sheet DMA28 time out		C
CFF1D	ASIC117 first sheet DMA29 time out		C
CFF1E	ASIC117 first sheet DMA30 time out		C
CFF50	Unsupported option trouble		
CFF51			
CFF52			
CFF53			
CFF54			
CFF55			
CFF56			
CFF57			
CFF58			
CFF59			
CFF5A			
CFF60			
CFF61			
CFF62			
CFF63			
CFF64			
CFF65			
CFF66			
CFF67			
CFF68			
CFF69			
CFF6A			
CFF6B			
CFF6C			
CFF6D			
CFF6E			
CFFA0			
CFFA1			
CFFA2			

20.4 How to reset

- Different malfunction resetting procedures apply depending on the rank of the trouble code.

* List of malfunction resetting procedures

Trouble code rank	Resetting procedures
Rank A	• Trouble reset For details of Trouble Reset, see Adjustment/ Setting. See P.388
Rank B	• Opening/closing the front door
Rank C	• Turning power switch OFF/ON

20.5 Solution

20.5.1 C0202: Tray 1 feeder up/down abnormality

Relevant parts	
Paper feed tray 1 lift-up motor (M8) Paper feed tray 1 upper limit sensor (PS8)	Printer control board (PRCB)

Step	Action	WIRING DIAGRAM	
		Control signal	Location (Electrical component)
1	Check the M8 connector for proper connection and correct as necessary.	—	—
2	Check the connector of M8 for proper drive coupling and correct as necessary.	—	—
3	PS8 I/O check, sensor check	PRCB CN12PRCB-3 (ON)	D-8
4	M8 operation check	PRCB CN11PRCB-4 (REM)	D-13
5	Change M8	—	—
6	Change PRCB	—	—

20.5.2 C0204: Tray 2 feeder up/down abnormality

Relevant parts	
Paper feed tray 2 lift-up motor (M9) Paper feed tray 2 upper limit sensor (PS15)	Printer control board (PRCB)

Step	Action	WIRING DIAGRAM	
		Control signal	Location (Electrical component)
1	Check the M9 connector for proper connection and correct as necessary.	—	—
2	Check the connector of M9 for proper drive coupling and correct as necessary.	—	—
3	PS15 I/O check, sensor check	PRCB CN9PRCB-3 (ON)	D-9
4	M9 operation check	PRCB CN7PRCB-9 (REM)	D-11
5	Change M9	—	—
6	Change PRCB	—	—

20.5.3 C0211: Manual feed up/down abnormality

Relevant parts	
Transport motor (M1) Manual pick-up solenoid (SL1) Manual lift-up position sensor (PS17)	Printer control board (PRCB)

Step	Action	WIRING DIAGRAM	
		Control signal	Location (Electrical component)
1	Check the M1 connector for proper connection and correct as necessary.	—	—
2	Check the connector of M1 for proper drive coupling and correct as necessary.	—	—
3	PS17 I/O check, sensor check	PRCB CN6PRCB-7 (ON)	D-2
4	SL1 operation check	PRCB CN6PRCB-4 (ON)	D-1
5	M1 operation check	PRCB CN34PRCB-10 (REM) PRCB CN34PRCB-13 (LOCK)	D-22
6	Change SL1	—	—
7	Change M1	—	—
8	Change PRCB	—	—

20.5.4 C0301: Suction fan motor's failure to turn

Relevant parts	
Suction fan motor (FM8)	Printer control board (PRCB)

Step	Action	WIRING DIAGRAM	
		Control signal	Location (Electrical component)
1	Check the FM8 connector for proper connection and correct as necessary.	—	—
2	Check the fan for possible overload and correct as necessary.	—	—
3	FM8 operation check	PRCB CN3PRCB-2 (ON) PRCB CN3PRCB-3 (LOCK)	D-4 to 5
4	Change the right door assy	—	—
5	Change PRCB	—	—

20.5.5 C2151: Secondary transfer roller pressure welding alienation

Relevant parts	
2nd image transfer retraction motor (M11) 2nd image transfer welding alienation sensor (PS36)	Printer control board (PRCB)

Step	Action	WIRING DIAGRAM	
		Control signal	Location (Electrical component)
1	Check the M11 connector for proper connection and correct as necessary.	—	—
2	Check the connector of M11 for proper drive coupling and correct as necessary.	—	—
3	PS36 I/O check, sensor check	PRCB CN3PRCB-9 (ON)	D-5
4	Change the right door assy	—	—
5	Change PRCB	—	—

20.5.6 C2152: Transfer belt pressure welding alienation

Relevant parts	
Fusing motor (M5) Transfer belt retraction clutch (CL7) Transfer belt retraction sensor (PS31)	Printer control board (PRCB)

Step	Action	WIRING DIAGRAM	
		Control signal	Location (Electrical component)
1	Check the M5 connector for proper connection and correct as necessary.	—	—
2	PS31 I/O check, sensor check	PRCB CN36PRCB-15 (ON)	D-26 to 27
3	CL7 operation check	PRCB CN39PRCB-10 (ON)	D-23
4	M5 operation check	PRCB CN34PRCB-2 (REM) PRCB CN34PRCB-5 (LOCK)	D-21
5	Change CL7	—	—
6	Change M5	—	—
7	Change PRCB	—	—

20.5.7 C2164: PC charge malfunction

Relevant parts	
Imaging unit	High voltage unit (HV) Printer control board (PRCB)

Step	Action	WIRING DIAGRAM	
		Control signal	Location (Electrical component)
1	Check the imaging unit for proper connection and correct as necessary.	—	—
2	Check the HV connector for proper connection and correct as necessary.	—	—
3	Check the PRCB connector for proper connection and correct as necessary.	—	—
4	Change IU	—	—
5	Change HV	—	—
6	Change PRCB	—	—

20.5.8 C2253: Color PC motor's failure to turn

20.5.9 C2254: Color PC motor's turning at abnormal timing

Relevant parts	
Color PC motor (M2)	Printer control board (PRCB)

Step	Action	WIRING DIAGRAM	
		Control signal	Location (Electrical component)
1	Check the M2 connector for proper connection and correct as necessary.	—	—
2	Check the M2 connector for proper drive coupling and correct as necessary.	—	—
3	Check the PRCB connector for proper connection and correct as necessary.	—	—
4	M2 operation check	PRCB CN35PRCB-4 (REM) PRCB CN35PRCB-7 (LOCK)	D-22
5	Change M2	—	—
6	Change PRCB	—	—

20.5.10 C225D: Color dev. unit engagement/disengagement failure

Relevant parts	
Color dev. unit engaged motor (M10) Color dev. unit engaged position sensor (PS26)	Printer control board (PRCB)

Step	Action	WIRING DIAGRAM	
		Control signal	Location (Electrical component)
1	Check the M10 connector for proper connection and correct as necessary.	—	—
2	Check the M10 connector for proper drive coupling and correct as necessary.	—	—
3	Check the PRCB connector for proper connection and correct as necessary.	—	—
4	PS26 I/O check, sensor check	PRCB CN39PRCB-18 (ON)	D-24
5	M10 operation check	PRCB CN39PRCB-12 (REM)	D-24
6	Change M10	—	—
7	Change PRCB	—	—

20.5.11 C2351: K toner suction fan motor's failure to turn

Relevant parts	
Toner suction fan motor (FM3)	Printer control board (PRCB)

Step	Action	WIRING DIAGRAM	
		Control signal	Location (Electrical component)
1	Check the FM3 connector for proper connection and correct as necessary.	—	—
2	Check the fan for possible overload and correct as necessary.	—	—
3	FM3 operation check	PRCB CN30PRCB-7 (ON) PRCB CN30PRCB-9 (LOCK)	K-7 to 8
4	Change FM3	—	—
5	Change PRCB	—	—

20.5.12 C2451: Release new transfer belt unit

Relevant parts	
Transfer belt unit	Printer control board (PRCB)

Step	Action	WIRING DIAGRAM	
		Control signal	Location (Electrical component)
1	Reinstall unit	—	—
2	Check there is a short circuit in the fuse of the transfer belt unit.	—	—
3	Check the PRCB connector for proper connection and correct as necessary.	—	—
4	Change PRCB	—	—

20.5.13 C2551: Abnormally low toner density detected cyan TCR sensor

20.5.14 C2553: Abnormally low toner density detected magenta TCR sensor

20.5.15 C2555: Abnormally low toner density detected yellow TCR sensor

Relevant parts	
Imaging unit /C Imaging unit /M Imaging unit /Y Toner cartridge /C Toner cartridge /M Toner cartridge /Y	Toner supply motor/CK (M3) Toner supply motor/YM (M4) Printer control board (PRCB)

Step	Action	WIRING DIAGRAM	
		Control signal	Location (Electrical component)
1	Reinstall imaging unit	—	—
2	Reinstall toner cartridge	—	—
3	M3, M4 operation check (At this time, IU must be non-installation.)	PRCB CN39PRCB-1 to 4 (M3) PRCB CN39PRCB-5 to 8 (M4)	D-23
4	Change imaging unit	—	—
5	Change PRCB	—	—

20.5.16 C2552: Abnormally high toner density detected cyan TCR sensor

20.5.17 C2554: Abnormally high toner density detected magenta TCR sensor

20.5.18 C2556: Abnormally high toner density detected yellow TCR sensor

Relevant parts	
Imaging unit /C Imaging unit /M Imaging unit /Y Toner cartridge /C Toner cartridge /M Toner cartridge /Y	Printer control board (PRCB)

Step	Action	WIRING DIAGRAM	
		Control signal	Location (Electrical component)
1	Reinstall imaging unit	—	—
2	Reinstall toner cartridge	—	—
3	Change imaging unit	—	—
4	Change PRCB	—	—

20.5.19 C2557: Abnormally low toner density detected black TCR sensor

Relevant parts	
Imaging unit /K Toner cartridge /K	Toner supply motor/CK (M3) Printer control board (PRCB)

Step	Action	WIRING DIAGRAM	
		Control signal	Location (Electrical component)
1	M3 operation check (At this time, IU must be non-installation.)	PRCB CN39PRCB-1 to 4	D-23
2	Reinstall imaging unit	—	—
3	Reinstall toner cartridge	—	—
4	Change imaging unit /K	—	—
5	Change PRCB	—	—

20.5.20 C2558: Abnormally high toner density detected black TCR sensor

Relevant parts	
Imaging unit /K Toner cartridge /K	Printer control board (PRCB)

Step	Action	WIRING DIAGRAM	
		Control signal	Location (Electrical component)
1	Reinstall imaging unit	—	—
2	Reinstall toner cartridge	—	—
3	Change imaging unit /K	—	—
4	Change PRCB	—	—

20.5.21 C2559: Cyan TCR sensor adjustment failure

20.5.22 C255A: Magenta TCR sensor adjustment failure

20.5.23 C255B: Yellow TCR sensor adjustment failure

Relevant parts	
Imaging unit /C Imaging unit /M Imaging unit /Y	Printer control board (PRCB)

Step	Action	WIRING DIAGRAM	
		Control signal	Location (Electrical component)
1	Reinstall imaging unit	—	—
2	Change imaging unit	—	—
3	Change PRCB	—	—

20.5.24 C255C: Black TCR sensor adjustment failure

Relevant parts	
Imaging unit /K	Printer control board (PRCB)

Step	Action	WIRING DIAGRAM	
		Control signal	Location (Electrical component)
1	Reinstall imaging unit /K	—	—
2	Change imaging unit /K	—	—
3	Change PRCB	—	—

20.5.25 C2650: Main backup media access error

Relevant parts	
Service EEPROM board (SV ERB)	Printer control board (PRCB)

Step	Action	WIRING DIAGRAM	
		Control signal	Location (Electrical component)
1	Check the connector (CN23PRCB) on PRCB, the connector (CN1SV ERB) on SV ERB, and the harness between the boards for proper connection and correct as necessary.	—	—
2	Change PRCB *1.* Turn OFF the power switch and replace the current PRCB with a new one. (When using a PRCB of another machine in service, be sure to use a PRCB installed in the same model.) See P.126 *2.* Update the PRCB firmware. *3.* After completing the firmware update, turn OFF and ON the power switch and check to see that warm-up is started. Make sure that malfunction codes other than C2650 or improper IU/TC placement is not detected. *4.* When the trouble cannot be solved, reinstall the removed PRCB to the original board. **NOTE** • **When taking the above steps, check whether PRCB is defective or not without replacing the SV ERB.**	—	—
3	Change SV ERB *1.* Replace the current SV ERB with a new one. See P.133 *2.* Turn ON the power switch and check to see that warm-up is started. (One minute is spent to prepare the new SV ERB for use. During the period, the control panel backlight stays off.) Make sure that malfunction codes other than C2650 or improper IU/TC placement is not detected. *3.* Make the specified readjustments. See P.133	—	—
4	If the above actions do not solve the problem, contact KMBT.	—	—

20.5.26 C2651: EEPROM access error (IU C)

20.5.27 C2652: EEPROM access error (IU M)

20.5.28 C2653: EEPROM access error (IU Y)

20.5.29 C2654: EEPROM access error (IU K)

Relevant parts	
Imaging unit /C Imaging unit /M Imaging unit /Y Imaging unit /K	Printer control board (PRCB)

Step	Action	WIRING DIAGRAM	
		Control signal	Location (Electrical component)
1	Clean the connection between the imaging unit and the machine if dirty	—	—
2	Reinstall imaging unit	—	—
3	Check the harness for proper connection and correct as necessary.	—	—
4	Change imaging unit	—	—
5	Change PRCB	—	—

20.5.30 C2A01: EEPROM access error (TC C)

20.5.31 C2A02: EEPROM access error (TC M)

20.5.32 C2A03: EEPROM access error (TC Y)

20.5.33 C2A04: EEPROM access error (TC K)

Relevant parts	
Toner cartridge /C Toner cartridge /M Toner cartridge /Y Toner cartridge /K	Printer control board (PRCB)

Step	Action	WIRING DIAGRAM	
		Control signal	Location (Electrical component)
1	Clean the connection between the toner cartridge and the machine if dirty.	—	—
2	Reinstall toner cartridge	—	—
3	Check the harness for proper connection and correct as necessary.	—	—
4	Change toner cartridge	—	—
5	Check that CN29 harness on PRCB has a ferrite core. If not, attach the ferrite core to the harness.	—	—
6	Change PRCB	—	—

20.5.34 C3101: Fusing roller separation failure

Relevant parts	
Fusing retraction motor (M12) Fusing roller retraction sensor (PS38)	Printer control board (PRCB) Fusing unit

Step	Action	WIRING DIAGRAM	
		Control signal	Location (Electrical component)
1	Check the M12 connector for proper connection and correct as necessary.	—	—
2	PS38 I/O check, sensor check	PRCB CN28PRCB-8 (ON)	D-25
3	M12 operation check	PRCB CN28PRCB-4 to 5	D-25
4	Change M12	—	—
5	Change fusing unit	—	—
6	Change PRCB	—	—

20.5.35 C3201: Fusing motor failure to turn

20.5.36 C3202: Fusing motor turning at abnormal timing

Relevant parts	
Fusing motor (M5)	Printer control board (PRCB)

Step	Action	WIRING DIAGRAM	
		Control signal	Location (Electrical component)
1	Check the M5 connector for proper connection and correct as necessary.	—	—
2	Check the loading status of the fusing unit drive, and correct the error as necessary.	—	—
3	Check the fusing unit, PRCB for proper connection and correct or change as necessary.	—	—
4	M5 operation check	PRCB CN34PRCB-2 (REM) PRCB CN34PRCB-5 (LOCK)	D-21
5	Change M5	—	—
6	Change PRCB	—	—

20.5.37 C3301: Fusing cooling fan motor/ 1 failure to turn

Relevant parts	
Fusing cooling fan motor/1 (FM9)	Printer control board (PRCB)

Step	Action	WIRING DIAGRAM	
		Control signal	Location (Electrical component)
1	Check the FM9 connector for proper connection and correct as necessary.	—	—
2	Check the fan for possible overload and correct as necessary.	—	—
3	FM9 operation check	PRCB CN40PRCB-2 (ON) PRCB CN40PRCB-3 (LOCK)	D-19
4	Change FM9	—	—
5	Change PRCB	—	—

20.5.38 C3302: Fusing cooling fan motor/ 2,3 failure to turn

Relevant parts	
Fusing cooling fan motor/2 (FM10) Fusing cooling fan motor/3 (FM11)	Printer control board (PRCB)

Step	Action	WIRING DIAGRAM	
		Control signal	Location (Electrical component)
1	Check the FM10 or FM11 connector for proper connection and correct as necessary.	—	—
2	Check the fan for possible overload and correct as necessary.	—	—
3	FM10/FM11 operation check	PRCB CN40PRCB-5 (ON) PRCB CN40PRCB-6 (LOCK)	D-19
		PRCB CN40PRCB-8 (ON) PRCB CN40PRCB-9 (LOCK)	D-18
4	Change FM10/FM11	—	—
5	Change PRCB	—	—

20.5.39 C3421: Fusing heaters trouble (heating side)

20.5.40 C3423: Fusing heaters trouble (pressurizing side)

Relevant parts	
Fusing unit	DC power supply (DCPU) Printer control board (PRCB)

Step	Action	WIRING DIAGRAM	
		Control signal	Location (Electrical component)
1	Check the fusing unit for correct installation (whether it is secured in position).	—	—
2	Check the open/close operation of the upper right door.	—	—
3	Check the fusing unit, PRCB and DCPU for proper connection and correct or change as necessary.	—	—
4	Change fusing unit	—	—
5	Change PRCB	—	—
6	Change DCPU	—	—

20.5.41 C3461: Release new fusing unit

Relevant parts	
Fusing unit	Printer control board (PRCB)

Step	Action	WIRING DIAGRAM	
		Control signal	Location (Electrical component)
1	Check the fusing unit for correct installation (whether it is secured in position).	—	—
2	Check the fusing unit, PRCB for proper connection and correct or change as necessary.	—	—
3	Reinstall fusing unit	—	—
4	Change fusing unit	—	—
5	Change PRCB	—	—

20.5.42 C3721: Fusing abnormally high temperature detection (heating side)

20.5.43 C3723: Fusing abnormally high temperature detection (pressurizing side)

Relevant parts	
Fusing unit	DC power supply (DCPU) Printer control board (PRCB)

Step	Action	WIRING DIAGRAM	
		Control signal	Location (Electrical component)
1	Check the fusing unit for correct installation (whether it is secured in position).	—	—
2	Check the open/close operation of the upper right door.	—	—
3	Check the fusing unit, PRCB and DCPU for proper connection and correct or change as necessary.	—	—
4	Change fusing unit	—	—
5	Change PRCB	—	—
6	Change DCPU	—	—

20.5.44 C3821: Fusing abnormally low temperature detection (heating side)

20.5.45 C3823: Fusing abnormally low temperature detection (pressurizing side)

Relevant parts	
Fusing unit	DC power supply (DCPU) Printer control board (PRCB)

Step	Action	WIRING DIAGRAM	
		Control signal	Location (Electrical component)
1	Check the fusing unit for correct installation (whether it is secured in position).	—	—
2	Check the open/close operation of the upper right door.	—	—
3	Check the fusing unit, PRCB and DCPU for proper connection and correct or change as necessary.	—	—
4	Change fusing unit	—	—
5	Change PRCB	—	—
6	Change DCPU	—	—

20.5.46 C4151: Polygon motor rotation trouble (C)

20.5.47 C4152: Polygon motor rotation trouble (M)

20.5.48 C4153: Polygon motor rotation trouble (Y)

20.5.49 C4154: Polygon motor rotation trouble (K)

Relevant parts	
PH unit	PH relay board (PHREYB) Printer control board (PRCB)

Step	Action	WIRING DIAGRAM	
		Control signal	Location (Electrical component)
1	Check the connector for proper connection and correct as necessary.	—	—
2	Change PH unit	—	—
3	Change PHREYB	—	—
4	Change PRCB	—	—

20.5.50 C4551: Laser malfunction (C)

20.5.51 C4552: Laser malfunction (M)

20.5.52 C4553: Laser malfunction (Y)

20.5.53 C4554: Laser malfunction (K)

Relevant parts	
PH unit	PH relay board (PHREYB) Printer control board (PRCB)

Step	Action	WIRING DIAGRAM	
		Control signal	Location (Electrical component)
1	Check the connector for proper connection and correct as necessary.	—	—
2	Change PH unit	—	—
3	Change PHREYB	—	—
4	Change PRCB	—	—

20.5.54 C5102: Transport motor's failure to turn

20.5.55 C5103: Transport motor's turning at abnormal timing

Relevant parts	
Transport motor (M1)	Printer control board (PRCB)

Step	Action	WIRING DIAGRAM	
		Control signal	Location (Electrical component)
1	Check the M1 connector for proper connection and correct as necessary.	—	—
2	Check M1 for proper drive coupling and correct as necessary.	—	—
3	Check the PRCB connector for proper connection and correct as necessary.	—	—
4	M1 operation check	PRCB CN34PRCB-10 (REM) PRCB CN34PRCB-13 (LOCK)	D-22
5	Change M1	—	—
6	Change PRCB	—	—

20.5.56 C5351: Power supply cooling fan motor's failure to turn

Relevant parts	
Power supply cooling fan motor (FM5)	Printer control board (PRCB)

Step	Action	WIRING DIAGRAM	
		Control signal	Location (Electrical component)
1	Check the FM5 connector for proper connection and correct as necessary.	—	—
2	Check the fan for possible overload and correct as necessary.	—	—
3	FM5 operation check	PRCB CN30PRCB-11 (ON) PRCB CN30PRCB-12 (LOCK)	K-8
4	Change FM5	—	—
5	Change DCPU	—	—
6	Change PRCB	—	—

20.5.57 C5353: Cooling fan motor/2's failure to turn

Relevant parts	
Cooling fan motor/2 (FM2)	Printer control board (PRCB)

Step	Action	WIRING DIAGRAM	
		Control signal	Location (Electrical component)
1	Check the FM2 connector for proper connection and correct as necessary.	—	—
2	Check the fan for possible overload and correct as necessary.	—	—
3	FM2 operation check	PRCB CN28PRCB-2 (ON) PRCB CN28PRCB-3 (LOCK)	D-24
4	Change FM2	—	—
5	Change PRCB	—	—

20.5.58 C5354: Exhaust fan motor's failure to turn

Relevant parts	
Exhaust fan motor (FM4)	Printer control board (PRCB)

Step	Action	WIRING DIAGRAM	
		Control signal	Location (Electrical component)
1	Check the FM4 connector for proper connection and correct as necessary.	—	—
2	Check the fan for possible overload and correct as necessary.	—	—
3	FM4 operation check	PRCB CN3PRCB-14 (ON) PRCB CN3PRCB-16 (LOCK)	D-6
4	Change FM4	—	—
5	Change MFPB	—	—

20.5.59 C5357: Cooling fan motor/1's failure to turn

Relevant parts	
Cooling fan motor/1 (FM1)	Printer control board (PRCB)

Step	Action	WIRING DIAGRAM	
		Control signal	Location (Electrical component)
1	Check the FM1 connector for proper connection and correct as necessary.	—	—
2	Check the fan for possible overload and correct as necessary.	—	—
3	FM1 operation check	PRCB CN30PRCB-4 (ON) PRCB CN30PRCB-6 (LOCK)	K-7
4	Change FM1	—	—
5	Change PRCB	—	—

20.5.60 C5371: MFP board cooling fan motor's failure to turn

Relevant parts	
MFP board cooling fan motor (FM6)	MFP board (MFPB)

Step	Action	WIRING DIAGRAM	
		Control signal	Location (Electrical component)
1	Check the FM6 connector for proper connection and correct as necessary.	—	—
2	Check the fan for possible overload and correct as necessary.	—	—
3	FM6 operation check	PRCB CN44PRCB-1 (REM) PRCB CN44PRCB-3 (LOCK)	K-9
4	Change FM6	—	—
5	Change MFPB	—	—

20.5.61 CA051: Standard controller configuration failure

20.5.62 CA052: Controller hardware error

20.5.63 CA053: Controller start failure

Relevant parts	
MFP board (MFPB)	

Step	Action	WIRING DIAGRAM	
		Control signal	Location (Electrical component)
1	Check to see if the following setting has been correctly made: [Service Mode] → [System 2] → [Image Controller Setting]. If changing the setting, turn OFF the power switch and turn it ON again after 10 seconds or more.	—	—
2	Check the connectors of the MFP board (MFPB) for proper connection and correct as necessary.	—	—
3	Change MFPB	—	—

20.5.64 CC151: ROM contents error upon startup (MSC)

20.5.65 CC153: ROM contents error upon startup (PRT)

Step	Action	WIRING DIAGRAM	
		Control signal	Location (Electrical component)
1	Check the ROM version.	—	—
2	Rewrite the firmware.	—	—
3	Replace the appropriate board.	—	—

20.5.66 CC163: ROM contents error (PRT)

Relevant parts	
Service EEPROM board (SV ERB)	Printer control board (PRCB)

Step	Action	WIRING DIAGRAM	
		Control signal	Location (Electrical component)
1	Rewrite the firmware.	—	—
2	Change PRCB *1.* Turn OFF the power switch and replace the current PRCB with a new one. (When using a PRCB of another machine in service, be sure to use a PRCB installed in the same model.) See P.126 *2.* Update the PRCB firmware. *3.* After completing the firmware update, turn OFF and ON the power switch and check to see that warm-up is started. *4.* When the trouble cannot be solved, reinstall the removed PRCB to the original board. **NOTE** • **When taking the above steps, check whether PRCB is defective or not without replacing the SV ERB.**	—	—
3	Change SV ERB *1.* Replace the current SV ERB with a new one. See P.133 *2.* Turn ON the power switch and check to see that warm-up is started. (One minute is spent to prepare the new SV ERB for use. During the period, the control panel backlight stays off.) *3.* Make the specified readjustments. See P.133	—	—
4	If the above actions do not solve the problem, contact KMBT.	—	—

20.5.67 CC164: ROM contents error (MSC)

Relevant parts	
Printer control board (PRCB)	MFP board (MFPB)

Step	Action	WIRING DIAGRAM	
		Control signal	Location (Electrical component)
1	Check the ROM version.	—	—
2	Rewrite the firmware.	—	—
3	Replace the corresponding board.	—	—
4	When not reviving even if the above-mentioned procedure is done, contact the responsible people of KMBT.	—	—

20.5.68 CD002: JOB RAM save error

Relevant parts	
MFP board (MFPB)	Hard disk

Step	Action	WIRING DIAGRAM	
		Control signal	Location (Electrical component)
1	Check the hard disk connector for proper connection and correct as necessary.	—	—
2	Format hard disk.	—	—
3	Change hard disk.	—	—
4	Change MFPB.	—	—

20.5.69 CD004: Hard disk access error

20.5.70 CD005: Hard disk error 1

20.5.71 CD006: Hard disk error 2

20.5.72 CD007: Hard disk error 3

20.5.73 CD008: Hard disk error 4

20.5.74 CD009: Hard disk error 5

20.5.75 CD00A: Hard disk error 6

20.5.76 CD00B: Hard disk error 7

20.5.77 CD00C: Hard disk error 8

20.5.78 CD00D: Hard disk error 9

20.5.79 CD00E: Hard disk error A

20.5.80 CD00F: Hard disk data transfer error

20.5.81 CD020: Hard disk verify error

Relevant parts	
MFP board (MFPB)	Hard disk

Step	Action	WIRING DIAGRAM	
		Control signal	Location (Electrical component)
1	Check the hard disk connector for proper connection and correct as necessary.	—	—
2	Reinstall the hard disk.	—	—
3	Change hard disk.	—	—
4	Change MFPB.	—	—

20.5.82 CD010: Hard disk unformat

Relevant parts	
MFP board (MFPB)	Hard disk

Step	Action	WIRING DIAGRAM	
		Control signal	Location (Electrical component)
1	Select [Service Mode] → [State Confirmation] → [Memory/HDD Adj.] → [HDD Format], and conduct the HDD format function.	—	—
2	Change hard disk.	—	—
3	Change MFPB	—	—

20.5.83 CD011: Hard disk out of specifications mounted

Relevant parts	
Hard disk	

Step	Action	WIRING DIAGRAM	
		Control signal	Location (Electrical component)
1	Check the hard disk specifications.	—	—
2	Change the hard disk.	—	—

20.5.84 CD201: File memory mounting error

20.5.85 CD202: Memory capacity discrepancy

20.5.86 CD203: Memory capacity discrepancy 2

Relevant parts	
MFP board (MFPB)	Memory

Step	Action	WIRING DIAGRAM	
		Control Signal	Location (Electrical Component)
1	Check to see if the memory on MFPB is installed correctly.	—	—
2	Change the memory on MFPB.	—	—
3	Change MFPB.	—	—

20.5.87 CD211: PCI-SDRAM DMA operation failure

20.5.88 CD212: Compression/extraction timeout detection

Relevant parts	
MFP board (MFPB)	

Step	Action	WIRING DIAGRAM	
		Control Signal	Location (Electrical Component)
1	Change MFPB.	—	—

20.5.89 CD241: Encryption board setting error

20.5.90 CD242: Encryption board mounting error

Relevant parts	
Encryption board (SC-503)	

Step	Action	WIRING DIAGRAM	
		Control Signal	Location (Electrical Component)
1	Check the encryption board connector for proper connection and correct as necessary.	—	—
2	Change encryption board.	—	—

20.5.91 CD261: USB host board failure

Relevant parts	
MFP board (MFPB)	USB host board (EK-603)

Step	Action	WIRING DIAGRAM	
		Control Signal	Location (Electrical Component)
1	Check that the USB device in use is compliant with the standard.	—	—
2	Check the operation with another USB device.	—	—
3	Check the USB host board connector for proper connection and correct as necessary.	—	—
4	Change USB host board.	—	—
5	Change MFPB.	—	—

20.5.92 CD3##: NVRAM data error

- When the data stored due to the NVRAM trouble is lost, backup data can be used for restoration.
- Trouble code [C-D370] will be displayed when multiple errors (over 5) of NVRAM data are detected, which can be restored with one restoration command.
- Data backup will be automatically performed every hour. Backup can also be performed manually with the following setting.
  [Service Mode] → [Enhanced Security] → [NVRAM Data Backup]
  See P.383

A. Recovery procedure from NVRAM data error

1. On the trouble code screen, highlight “Recover Data” and press the Menu/Select key.
2. Select [Yes] and press the Menu/Select key.
3. The screen will be shifted to the data restoration screen to perform data restoration.

NOTE

- **When the restoration is performed in a short time, data restoration screen may not be displayed.**

4. Check the message which indicates that the data restoration was successfully conducted. Turn OFF the power switch and turn it ON again more than 10 seconds after.

NOTE

- **In case it failed to restore data, return to the trouble code screen.**

20.5.93 CD401: NACK command incorrect

20.5.94 CD402: ACK command incorrect

20.5.95 CD403: Checksum error

20.5.96 CD404: Receiving packet incorrect

20.5.97 CD405: Receiving packet analysis error

20.5.98 CD406: ACK receiving timeout

20.5.99 CD407: Retransmission timeout

Relevant parts	
MFP board (MFPB)	

Step	Action	WIRING DIAGRAM	
		Control Signal	Location (Electrical Component)
1	Check whether there is an strong electromagnetic noise source near the main body.	—	—
2	Check the connectors on MFPB for proper connection and correct as necessary.	—	—
3	Change MFPB.	—	—

20.5.100 CE001: Abnormal message queue

20.5.101 CE003: Task error

20.5.102 CE004: Event error

20.5.103 CE005: Memory access error

20.5.104 CE006: Header access error

20.5.105 CE007: DIMM initialize error

Relevant parts	
MFP board (MFPB)	

Step	Action	WIRING DIAGRAM	
		Control signal	Location (Electrical component)
1	Check the connectors on MFPB for proper connection and correct as necessary.	—	—
2	Change MFPB	—	—

20.5.106 CE002: Message and method parameter failure

Relevant parts	
MFP board (MFPB)	Hard disk

Step	Action	WIRING DIAGRAM	
		Control signal	Location (Electrical component)
1	If it occurred after upgrading the firmware, conduct the following setting. [Service Mode] → [Sate Confirmation] → [Memory/HDD Adj.] → [HDD Version Up] See P.369	—	—
2	Turn OFF the power switch and turn it ON again, and conduct the following setting. [Service Mode] → [System 1] → [Initialization] → [Data Clear]. See P.342	—	—
3	Format hard disk.	—	—
4	Change hard disk.	—	—
5	Change MFPB	—	—

20.5.107 CEEE1: MSC undefined malfunction occurring

Relevant parts	
MFP board (MFPB)	

Step	Action	WIRING DIAGRAM	
		Control signal	Location (Electrical component)
1	Check the connectors on MFPB for proper connection and correct as necessary.	—	—
2	Change MFPB	—	—

20.5.108 CEEE3: Engine section undefined malfunction

Relevant parts	
Printer control board (PRCB)	

Step	Action	WIRING DIAGRAM	
		Control signal	Location (Electrical component)
1	Check the PRCB connector for proper connection and correct as necessary.	—	—
2	Change PRCB	—	—

21. Power supply trouble

21.1 Machine is not energized at all (DCPU operation check)

Relevant parts	
Main power switch (S1) Front door switch/1 (S3) Front door switch/2 (S4) Printer control board (PRCB)	DC power supply (DCPU)

Step	Check item	WIRING DIAGRAM (Location)	Result	Action
1	Is a power voltage supplied across CN1DCPU-1 and 2 on DCPU?	S-4	NO	Check the WIRING from the wall outlet to S1 to CN1DCPU.
2	Are the fuses on DCPU conducting?	—	NO	Change DCPU.
3	Is DC24 V being output from CN7DCPU-5 on DCPU?	Q-6	NO	Change DCPU.
4	Is DC5 V being input to CN5DCPU-1 on DCPU?	Q-5	NO	Change DCPU.
5	Is DC5 V being input to CN31PRCB-3 on the printer control board? (LED on PRCB does not blink.)	H-4	NO	Change DCPU.
			YES	Change PRCB.

21.2 Control panel indicators do not light.

Relevant parts	
Operation Board (OB)	JMP board (JMPB) DC power supply (DCPU)

Step	Check item	WIRING DIAGRAM (Location)	Result	Action
1	Is OB (PJ30MFPB) securely set on the MFPB?	T to U-12	NO	Reconnect.
2	After the power switch is turned ON, the blue and orange status indicator lights continue to be on while the control panel is not being displayed. Is JMPB (PJ17MFPB) securely set on the MFPB?	T to U-9	NO	Reconnect.
3	Is a power voltage being applied across CN1DCPU-1 and 2 on DCPU?	S-4	NO	Check the WIRING from the wall outlet to S1 to CN1DCPU.
4	Is the fuse on DCPU conducting?	—	NO	Change DCPU.

21.3 Fusing heaters do not operate

Relevant parts	
Main power switch (S1) Right door switch (S5) Fusing unit	DC power supply (DCPU)

Step	Check item	WIRING DIAGRAM (Location)	Result	Action
1	Is the power source voltage applied across CN7DCPU-5 on DCPU? During this time, the right door should be closed.	Q-6	NO	Check wiring from power outlet to S1 to CN7DCPU to S5.
2	Is the power source voltage applied across CN27-1?	D-19	YES	Fusing unit
			NO	Change DCPU.

21.4 Power is not supplied to option

21.4.1 PC-104/204/405

Step	Check item	WIRING DIAGRAM (Location)	Result	Action
1	Is DC24 V being applied to hookup connector CN47-13?	J-16	NO	Malfunction in paper feed cabinet
2	Is DC24 V being output from CN14PRCB-2 on PRCB?	H-16	NO	Check wiring from PRCB to CN47 to paper feed cabinet.
3	Is the fuse on DCPU conducting?	—	YES	Change DCPU.
			NO	Malfunction in paper feed cabinet

⚠1 21.4.2 FS-519/FS-609

Step	Check item	WIRING DIAGRAM (Location)	Result	Action
1	Are DC24 V being applied to CN51-1?	J-18	NO	Malfunction in FS-519/FS-609.
2	Are DC24 V being applied to CN4DCPU-1 on DCPU?	Q-3	NO	Check wiring from DCPU to FS-519/FS-609.
3	Is the fuse on DCPU conducting?	—	YES	Change DCPU.
			NO	Malfunction in FS-519/FS-609.

22. Image quality problem

22.1 How to read element date

- As part of troubleshooting procedures, the numeric values set for “State Confirmation” available from “Service Mode” can be used to isolate the cause of the image problem.

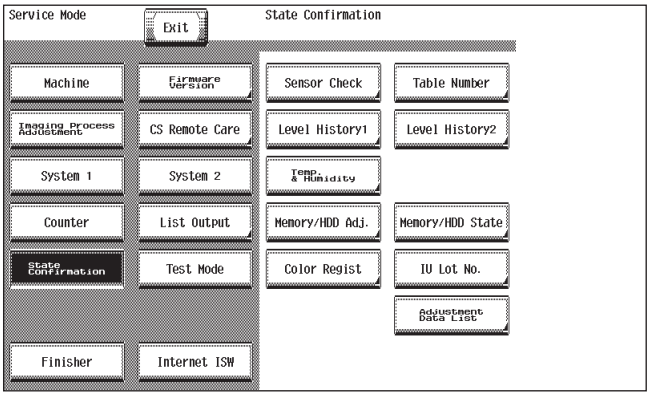

A02EF4E011DA

22.1.1 Table number

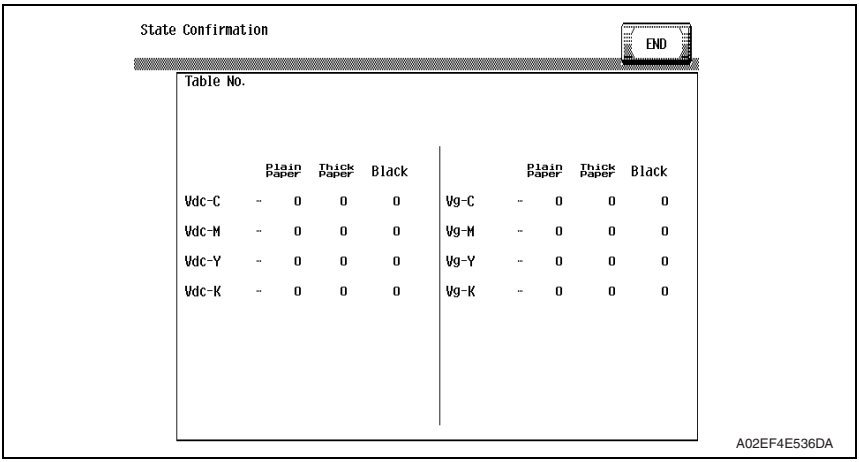

Vdc-C Vdc-M Vdc-Y Vdc-K	• Shows the developing bias value of each color of toner when an image is produced. • Standard values: around 100 to 800 V • A correction is made to make the image lighter when the numeric value is greater. • A correction is made to make the image darker when the numeric value is smaller. • Relevant Components: Imaging unit, high voltage unit (HV)
Vg-C Vg-M Vg-Y Vg-K	• Shows the grid voltage value of each color of toner when an image is produced. • Standard values: around 300 to 1100 V • A correction is made to make the image lighter when the numeric value is greater. • A correction is made to make the image darker when the numeric value is smaller. • Relevant Components: Imaging unit, high voltage unit (HV)

22.1.2 Level history 1

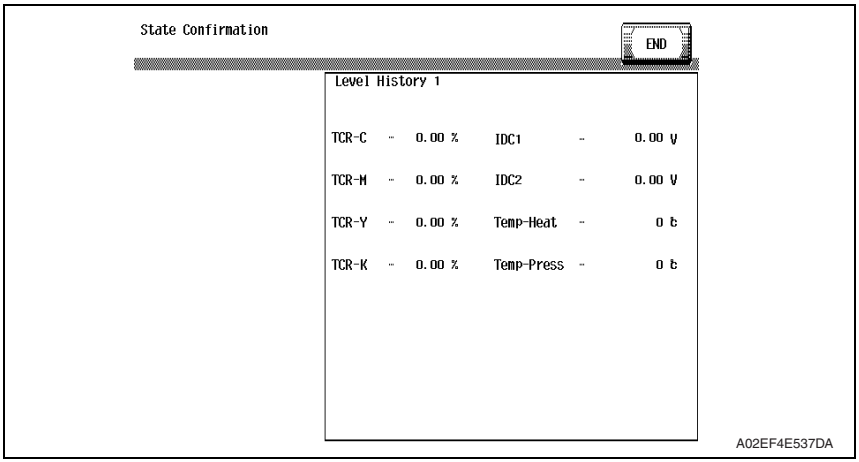

TCR-C TCR-M TCR-Y TCR-K	• Shows the T/C ratio reading taken last (in 0.01 % increments). • Standard value: 6 to 8 % • Relevant components: TCR sensor • “Reading taken last” means: Latest value When the Start key is pressed, the output value is displayed while a test print is being produced.
IDC1 IDC2	• Shows the IDC bare surface output reading taken last (in 0.01 V increments). • It should normally be around 4.3 V. • The output range is 0 V to 5 V. • “Reading taken last” means: Present value • Relevant components: IDC sensor, transfer belt unit
Temp-Heat Temp-Press	• Shows the temperature of the each part of the fusing unit (in 1 °C increments). • Relevant components: Fusing unit

22.1.3 Level history 2

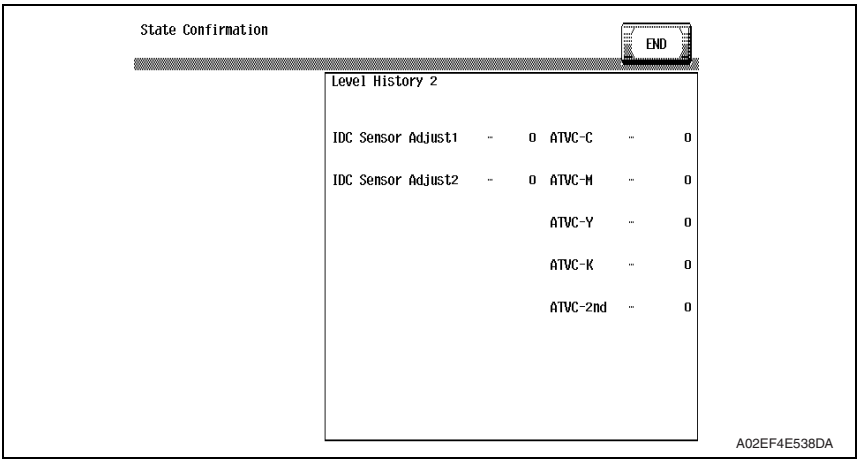

IDC Sensor Adjust 1 IDC Sensor Adjust 2	• Shows the IDC intensity adjustment value. • It should normally be around 40 and can range from 0 to 255. • The value becomes greater as the transfer belt unit has been used more. • Relevant components: IDC sensor, transfer belt unit
ATVC -C ATVC -M ATVC -Y ATVC -K ATVC -2nd	• Shows the latest ATVC level (which varies according to the paper type). • 5 μA to 40 μA (ATVC-C/-M/-Y/-K) • 300 V to 4800 V (ATVC-2nd) • Relevant components: Transfer belt unit, High voltage unit (HV), 2nd transfer assy

22.2 How to identify problematic part

- This chapter is divided into two parts: “Initial check items” and “Troubleshooting procedure by a particular image quality problem.”
- When an image quality problem occurs, first go through the “Initial check items” and, if the cause is yet to be identified, go to “Troubleshooting procedure by a particular image quality problem.”

22.2.1 Initial check items

A. Initial check items 1

- The trouble will be distinguished whether it is on the printer, or on the controller.

* How to distinguish

Action	Result	Next step
When transmitting the print job to C353P, the “RIP” is displayed on the control panel on the machine.	NO	See P.498 (Trouble on the controller)
When selecting “GDI Demo Page” from “Print Reports” which is available from “User Settings”, image trouble occurs.	NO	• Check the connector connected to MFP board. • Replace the MFP board.
	YES	Initial check items 2

B. Initial check items 2

- If the printer is responsible for the image problem, let the machine produce a test print and determine whether the image problem occurs in a specific single color or four colors

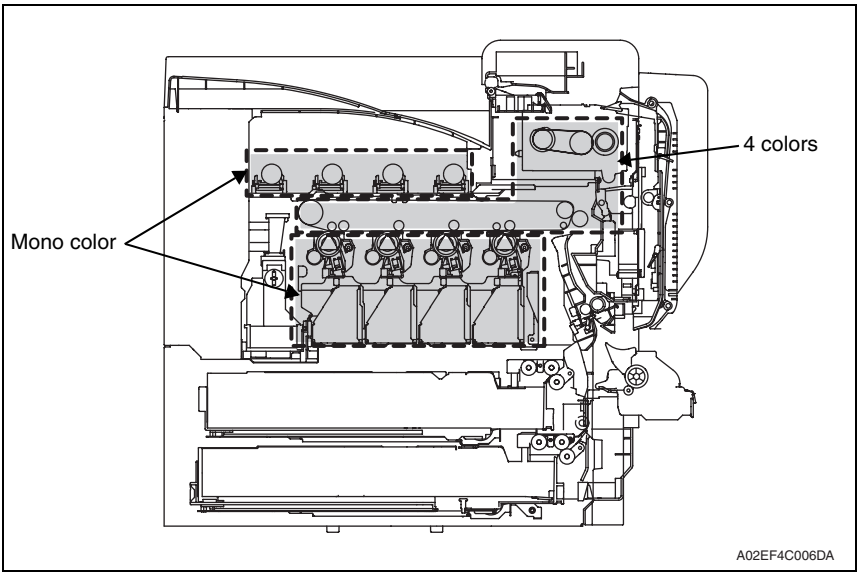

- Evaluation procedure

Image problem	Action	Result	Cause	Next step
Lines, bands	From [User Settings], select [Print Reports] → [GDI Demo Page], and produce a test print. Is image problem evident in each of all four colors?	YES	Printer, 4 colors	P.485
		NO	Printer, single color	P.471

22.3 Solution

NOTE

- **Typical faulty image samples shown in the following are all printed with A4S setting.**

22.3.1 Printer monocolor: white lines in sub scan direction, white bands in sub scan direction, colored lines colored bands in sub scan direction

A. Typical faulty images

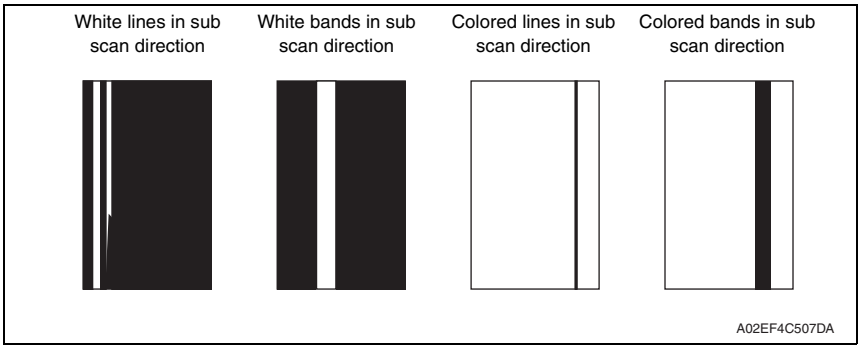

B. Troubleshooting procedure

Step	Section	Check item	Result	Action
1	Image check	A white line or black line in sub scan direction is sharp.	YES	Clean the electrostatic charger wire.
2	Imaging unit	The surface of the PC drum is scratched.	YES	Change imaging unit.
3		Dirty on the outside.	YES	Clean.
4		Contact terminals make good connection between each IU and machine.	NO	Clean contact terminals.
5		Developing bias contact terminal makes good connection.	NO	Clean contact terminal and check terminal position.
6	PH unit	The surface of the PH window is dirty.	YES	Clean with cleaning jig.
7		The problem has been eliminated through the checks of steps up to 6.	NO	Change imaging unit. → Change transfer belt unit. → Change PH unit.

22.3.2 Printer monocolor: white lines in main scan direction, white bands in main scan direction, colored lines in main scan direction, colored bands in main scan direction

A. Typical faulty images

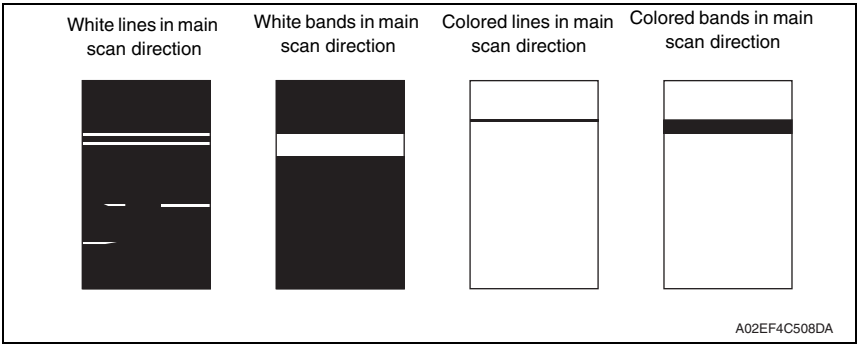

B. Troubleshooting procedure

Step	Section	Check item	Result	Action
1	Image check	A white line or black line in main scan direction is sharp.	NO	Clean the electrostatic charger wire.
2	Imaging unit	The surface of the PC drum is scratched.	YES	Change imaging unit.
3		Dirty on the outside.	YES	Clean.
4		Contact terminals make good connection between each IU and machine.	NO	Clean contact terminals.
5		Developing bias contact terminal makes good connection.	NO	Clean contact terminal and check terminal position.
6	PH unit	The surface of the PH window is dirty.	YES	Clean with cleaning jig.
7		The problem has been eliminated through the checks of steps up to 6.	NO	Change imaging unit. → Change transfer belt unit. → Change PH unit.

22.3.3 Printer monocolor: uneven density in sub scan direction

A. Typical faulty images

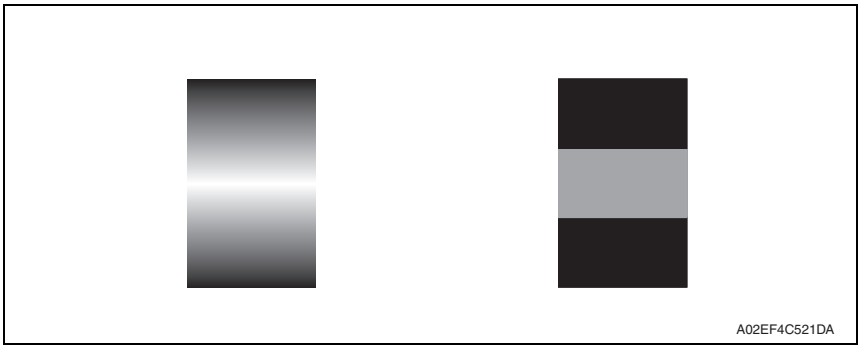

B. Troubleshooting procedure

Step	Section	Check item	Result	Action
1	High image density original	Uneven density in sub scan direction occurs at a pitch of 40 mm to 50 mm when a multi-print cycle is run using an original with high image density (50% or more).	YES	Feed 10 to 20 blank sheets of paper with no originals placed, as the IU fails to keep up with a high demand for toner.
2	Machine → LD adjustment → LD lightness balance adjust. (Service Mode)	The problem has been eliminated through the LD lightness balance adjust.	NO	Go to next step.
3	Imaging unit	The surface of the PC drum is scratched.	YES	Change imaging unit.
4		Dirty on the outside.	YES	Clean.
5	PH unit	The surface of the PH window is dirty.	YES	Clean with cleaning jig.
6	Image transfer belt unit	Is abnormality found in the cam gear?	YES	Change transfer belt unit.
7		The problem has been eliminated through the checks of steps up to 6.	NO	Change IU. → Change PH unit. → Change printer control board. → Change High voltage unit.

22.3.4 Printer monocolor: uneven density in main scan direction

A. Typical faulty images

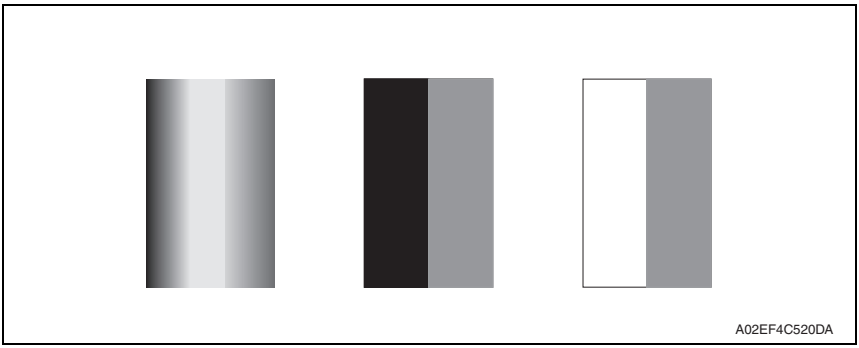

B. Troubleshooting procedure

Step	Section	Check item	Result	Action
1	Machine → LD adjustment → LD lightness balance adjust. (Service Mode)	The problem has been eliminated through the LD lightness balance adjust.	NO	Go to next step.
2	Imaging unit	The surface of the PC drum is scratched.	YES	Change imaging unit.
3		Dirty on the outside.	YES	Clean.
4	PH unit	The surface of the PH window is dirty.	YES	Clean with cleaning jig.
5	Transfer roller	Check that the spring does not come off during the pressure operation of the transfer roller.	NO	Correct. Change transfer roller unit.
6	Transfer belt unit	Transfer belt unit makes positive contact with plates on rails.	NO	Check and correct contacts.
7		Is abnormality found in the cam gear?	YES	Change transfer belt unit.
8		The problem has been eliminated through the checks of steps up to 7.	NO	Change imaging unit. → Change PH unit. → Change high voltage unit.

22.3.5 Printer monocolor: low image density

A. Typical faulty images

A02EF4C516DA

B. Troubleshooting procedure

Step	Section	Check item	Result	Action
1	Warning display	The warning code is displayed on the panel.	YES	Take action according to the warning code shown on the state confirm screen.
2	State Confirmation → Table Number (Service Mode)	Check data for Vg and Vdc. Color Vdc: around 400 V Vg : around 500 V Black Vdc: around 400 V Vg : around 500 V	—	Go to next step.
3	State Confirmation → Level History1 (Service Mode)	Check TCR data. (specified rang: 6 to 8 %)	NO	Go to next step.
4		IDC output value is around 4.3 V.	NO	Clean IDC sensor and execute the image stabilization. Check image transfer belt for damage and correct as necessary.
5	Level history data check results	Low TCR and low Vg and Vdc	YES	Go to step 10.
6		Low TCR and high Vg and Vdc	YES	Go to step 14.
7		TCR falling within specified range and low Vg and Vdc	YES	Go to step 10.
8		TCR falling within specified range and high Vg and Vdc	YES	Go to step 14.
9		The situations other than the above-mentioned.	YES	Go to step 10.
10	Imaging unit	Dirty on the outside.	YES	Clean.
11	PH unit	The surface of the PH window is dirty.	YES	Clean with cleaning jig.
12	Transfer belt unit	Transfer belt unit makes positive contact with plates on rails.	NO	Check and correct contacts.
13		Is abnormality found in the cam gear?	YES	Change transfer belt unit.

Step	Section	Check item	Result	Action
14	Hopper unit	Connectors are loose.	YES	Reconnect.
15		Gear is cracked.	YES	Change gear.
16	Image Process Adjustment → TCR Toner Supply (Service Mode)	Toner is properly supplied when TCR toner supply is run.	NO	Go to next step.
17	Image Process Adjustment → X-Rite Caribration (Service Mode) *1	"Conv. Value" falls within the specified range as checked through gradation adjust. Dark: 0 ± 100 Highlight: 0 ± 60	YES	Go to step 20.
18	Image Process Adjustment → D Max Density (Service Mode)	The problem has been eliminated through the adjust of D Max Density.	NO	Go to next step.
19	Image Process Adjustment → Stabilizer → Initialize + Image Stabilization (Service Mode)	After the Initialize + Image Stabilization sequence has been completed, run gradation adjust.	NO	Go to next step.
20		The problem has been eliminated through the checks of steps up to 19.	NO	Change imaging unit. → Change printer control board. →Change PH unit. →Change high voltage unit.

*1: When customer needs high-quality color printing, performing calibration with X-Rite is recommended.

22.3.6 Printer monocolor: gradation reproduction failure

A. Typical faulty images

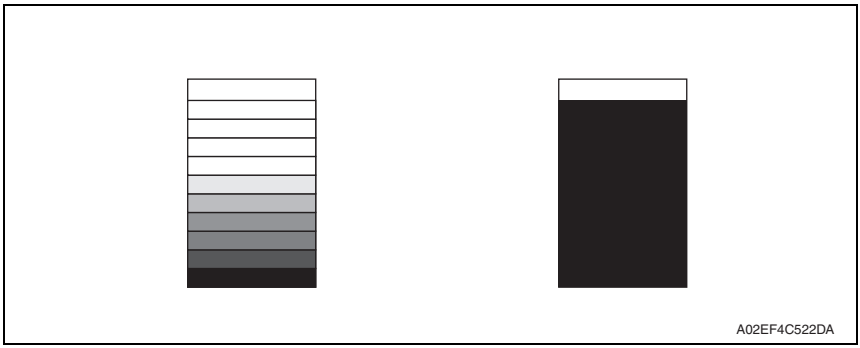

B. Troubleshooting procedure

Step	Section	Check item	Result	Action
1	Warning display	The warning code is displayed on the panel.	YES	Take action according to the warning code shown on the state confirm screen.
2	Photo/density	Original type and screen pattern are selected properly.	NO	Change screen pattern.
3	Imaging unit	Dirty on the outside.	YES	Clean.
4	PH unit	The surface of the PH window is dirty.	YES	Clean with cleaning jig.
5	State Confirmation → Level History1 (Service Mode)	IDC output value is around 4.3 V.	NO	Clean IDC sensor and execute the image stabilization. Check transfer belt for damage and correct as necessary.
6	Image Process Adjustment → X-Rite Caribration (Service Mode) *1	"Conv. Value" falls within the specified range as checked through gradation adjust. Dark: 0 ± 100 Highlight: 0 ± 60	YES	Go to step 9.
7	Image Process Adjustment → D Max Density (Service Mode)	The problem has been eliminated through the adjust of D Max Density.	NO	Go to next step.
8	Image Process Adjustment → Stabilizer → Initialize + Image Stabilization (Service Mode)	After the Initialize + Image Stabilization sequence has been completed, run gradation adjust;	NO	Go to next step.
9		The problem has been eliminated through the checks of steps up to 8.	NO	Change imaging unit. → Change printer control board → Change PH unit. → Change high voltage unit.

*1: When customer needs high-quality color printing, performing calibration with X-Rite is recommended.

22.3.7 Printer monocolor: foggy background

A. Typical faulty images

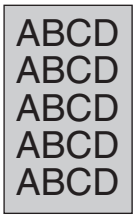

A02EF4C510DA

B. Troubleshooting procedure

Step	Section	Check item	Result	Action
1	Warning display	The warning code is displayed on the panel.	YES	Take action according to the warning code shown on the state confirm screen.
2	State Confirmation → Table Number (Service Mode)	Check data for Vg and Vdc. Color Vdc: around 400 V Vg : around 500 V Black Vdc: around 400 V Vg : around 500 V	NO	Go to next step.
3	State Confirmation → Level History1 (Service Mode)	Check TCR data. (specified rang: 6 to 8 %)	NO	Go to next step.
4		IDC output value is around 4.3 V.	NO	Clean IDC sensor and execute the image stabilization. Check transfer belt for damage and correct as necessary.
5	Level history data check results	Low TCR and low Vg and Vdc	YES	Go to step 10.
6		Low TCR and high Vg and Vdc	YES	Go to step 12.
7		TCR falling within specified range and low Vg and Vdc	YES	Go to step 10.
8		TCR falling within specified range and high Vg and Vdc	YES	Go to step 12.
9		The situations other than the above-mentioned.	YES	Go to step 10.
10	Imaging unit	Dirty on the outside.	YES	Clean.
11	PH unit	The surface of the PH window is dirty.	YES	Clean with cleaning jig.
12	Image Process Adjustment → Background Voltage Margin (Service Mode)	The problem is eliminated after background voltage margin has been adjusted.	NO	Go to next step.

Step	Section	Check item	Result	Action
13	Image Process Adjustment → X-RIte Caribration (Service Mode) *1	"Conv. Value" falls within the specified range as checked through gradation adjust. Dark: 0 ± 100 Highlight: 0 ± 60	YES	Go to step 17.
14	Image Process Adjustment → D Max Density (Service Mode)	The problem has been eliminated through the adjust of D Max Density.	NO	Go to next step.
15	Image Process Adjustment → Stabilizer → Initialize + Image Stabilization (Service Mode)	After the Initialize + Image Stabilization sequence has been completed, run gradation adjust.	NO	Go to next step.
16	Printer control board (PRCB) PH relay board (PHREYB)	Check the connection of connectors, harness, and flat cables between PRCB and PHREYB, and correct if necessary.	NO	Change printer control board. Change PH relay board.
17		The problem has been eliminated through the checks of steps up to 16.	NO	Change imaging unit. → Change PH unit. → Change high voltage unit.

*1: When customer needs high-quality color printing, performing calibration with X-Rite is recommended.

22.3.8 Printer monocolor: void areas, white spots

A. Typical faulty images

Void areas

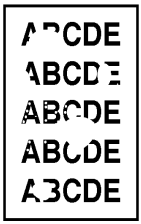

White spots

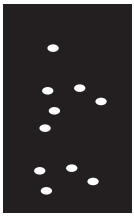

A02EF4C523DA

B. Troubleshooting procedure

Step	Section	Check item	Result	Action
1	Image Check	There are void areas at the front side or high density section.	YES	See P.475
2		There is void area at the rear side section.	YES	Perform [Transfer Output Fine Adjustment] of [Image Process Adjustment] under Service Mode.
3	Imaging unit	The surface of the PC drum is scratched.	YES	Change imaging unit.
4		Dirty on the outside.	YES	Clean.
5	Toner cartridge	Foreign matter or caked toner in the toner cartridge.	YES	Remove foreign matter.
6	Installation environment	Is the atmospheric pressure at the installation site low?	YES	Make the following adjustment: [Service Mode] → [Image Process Adjustment] → [Dev. Bias Choice].

22.3.9 Printer monocolor: colored spots

A. Typical faulty images

A02EF4C524DA

B. Troubleshooting procedure

Step	Section	Check item	Result	Action
1	Imaging unit	Developing bias contact terminal makes good connection.	NO	Clean contact terminal and check terminal position.
2		The surface of the PC drum is scratched.	YES	Change imaging unit.
3		Dirty on the outside.	YES	Clean.

22.3.10 Printer monocolor: blurred image

A. Typical faulty images

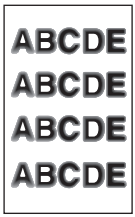

A02EF4C511DA

B. Troubleshooting procedure

Step	Section	Check item	Result	Action
1	PH unit	The surface of the PH window is dirty.	YES	Clean with cleaning jig.
2	Imaging unit	Dirty on the outside.	YES	Clean.
3		The problem has been eliminated through the checks of steps up to 2.	NO	Change imaging unit. → Change PH unit.

22.3.11 Printer monocolor: blank print, black print

A. Typical faulty images

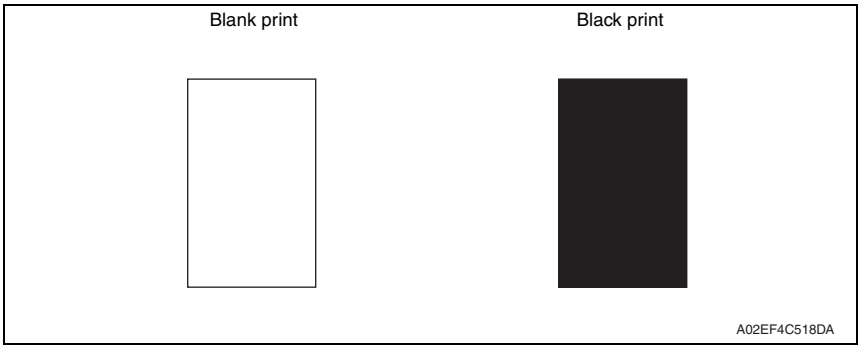

B. Troubleshooting procedure

Step	Section	Check item	Result	Action
1	Image check	A blank print occurs.	YES	Check PH unit connector for proper connection.
2	Imaging unit	Coupling of IU drive mechanism is installed properly.	NO	Check and correct drive transmitting coupling. Change IU.
3		The PC drum charge corona voltage contact or PC drum ground contact of the imaging unit is connected properly.	NO	Check, clean, or correct the contact.
4	High voltage unit	Connector is connected properly.	NO	Reconnect.
5		The problem has been eliminated through the check of step 4.	NO	Change high voltage unit. → Change printer control board → Change PH unit.

22.3.12 Printer monocolor: uneven image

A. Typical faulty images

A02EF4C525DA

B. Troubleshooting procedure

Step	Section	Check item	Result	Action
1	Toner cartridge	The toner cartridge of every color is surely installed.	NO	Re-install it.
2	PH unit	The PH unit is surely installed.	NO	Re-install it.
3	Toner cartridge	There is any stain or breakage on the drive section of the toner cartridge.	YES	Clean/replace the toner cartridge.
4	Imaging unit	There is any stain, damage or abrasion on the PC drum.	YES	Replace the imaging unit.
5	Transfer roller	There is any stain, damage, deformation or abrasion on the transfer roller.	YES	Replace the transfer roller.
6	Fusing unit	There is any stain, damage, deformation or abrasion on the roller and drive section of the fusing unit.	YES	Replace the fusing unit.
7		The problem has been eliminated through the check of step 6.	NO	Replace the transfer belt unit.

22.3.13 Printer 4-color: white lines in sub scan direction, white bands in sub scan direction, colored lines in sub scan direction, and colored bands in sub scan direction

A. Typical faulty images

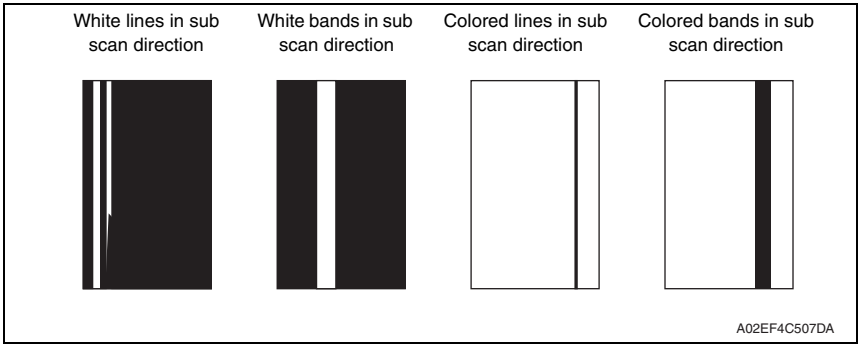

B. Troubleshooting procedure

Step	Section	Check item	Result	Action
1	Image check	A white line or colored line in sub scan direction.	YES	Clean the comb electrode by moving the comb electrode cleaning lever.
2	Transfer belt unit	Fingerprints, oil, or other foreign matter is evident on the transfer belt.	YES	Clean.
3		Transfer belt is dirty or scratched.	YES	Clean dirty belt with a soft cloth. Change transfer belt unit if belt is damaged.
4		Cleaning blade is not effective in removing toner completely.	YES	Clean cleaning blade. Change transfer belt unit.
5	Transfer roller unit	Transfer roller is dirty or scratched.	YES	Change transfer roller unit.
6	Paper path	There is foreign matter on paper path.	YES	Remove foreign matter.
7		Image transfer paper separator fingers are damaged or dirty.	YES	Clean or change.
8	Fusing unit	Fusing entrance guide plate is dirty or damaged.	YES	Clean. Change fusing unit.
9		Fusing paper separator fingers are dirty.	YES	Clean.
10		The problem has been eliminated through the checks of steps up to 9.	NO	Change printer control board

22.3.14 Printer 4-color: white lines in main scan direction, white bands in main scan direction, colored lines in main scan direction, and colored bands in main scan direction

A. Typical faulty images

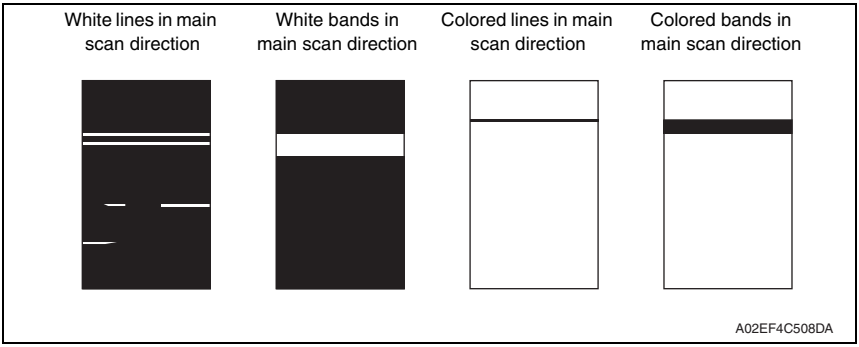

B. Troubleshooting procedure

Step	Section	Check item	Result	Action
1	Transfer belt unit	Fingerprints, oil, or other foreign matter is evident on the transfer belt.	YES	Clean.
2		Transfer belt is dirty or scratched.	YES	Clean dirty belt with a soft cloth. Change transfer belt unit if belt is damaged.
3	Transfer roller unit	Transfer roller is dirty or scratched.	YES	Change transfer roller unit.
4	Paper path	There is foreign matter on paper path.	YES	Remove foreign matter.
5		Image transfer paper separator fingers are damaged or dirty.	YES	Clean or change.
6	Fusing unit	Fusing entrance guide plate is dirty or damaged.	YES	Clean. Change fusing unit.
7		Fusing paper separator fingers are dirty.	YES	Clean.
8	Neutralizing brush	The resistance values between the neutralizing brush and the ground terminal is not ∞.	NO	Check the contact modify. Change neutralizing brush.
9		The problem has been eliminated through the checks of steps up to 8.	NO	Change printer control board

22.3.15 Printer 4-color: uneven density in sub scan direction

A. Typical faulty images

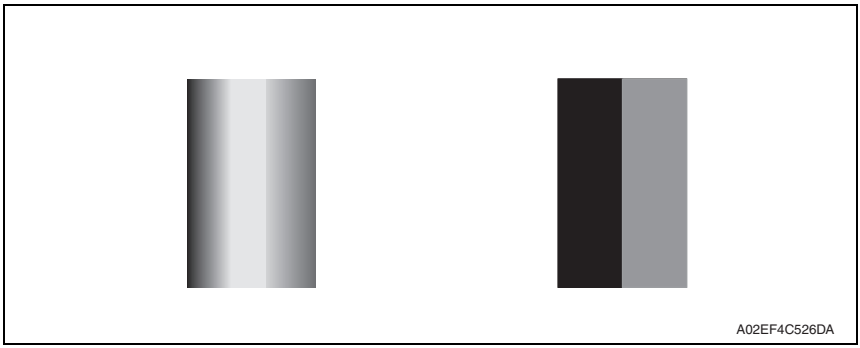

B. Troubleshooting procedure

Step	Section	Check item	Result	Action
1	Transfer belt unit	Fingerprints, oil, or other foreign matter is evident on the transfer belt.	YES	Clean.
2		Transfer belt is dirty or scratched.	YES	Clean dirty belt with a soft cloth. Change transfer belt unit if belt is damaged.
3		Terminal is dirty.	YES	Clean.
4	Transfer roller unit	Image transfer roller is installed properly.	NO	Reinstall.
5		Image transfer roller is dirty or scratched.	YES	Change transfer roller unit.
6		The problem has been eliminated through the checks of steps up to 5.	NO	Change transfer belt unit.

22.3.16 Printer 4-color: uneven density in main scan direction

A. Typical faulty images

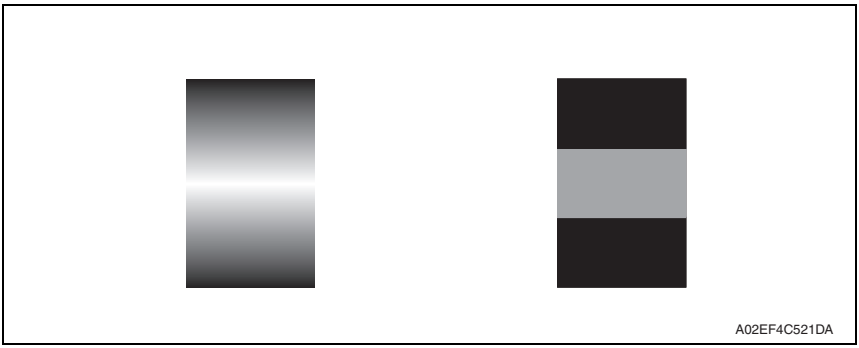

B. Troubleshooting procedure

Step	Section	Check item	Result	Action
1	Transfer belt unit	Fingerprints, oil, or other foreign matter is evident on the transfer belt.	YES	Clean.
2		Transfer belt is dirty or scratched.	YES	Clean dirty belt with a soft cloth. Change transfer belt unit if belt is damaged.
3		Terminal is dirty.	YES	Clean.
4	Transfer roller unit	Image transfer roller is installed properly.	NO	Reinstall.
5		Image transfer roller is dirty or scratched.	YES	Change transfer roller unit.
6		The problem has been eliminated through the checks of steps up to 5.	NO	Change transfer belt unit. → Change high voltage unit.

22.3.17 Printer 4-color: low image density

A. Typical faulty images

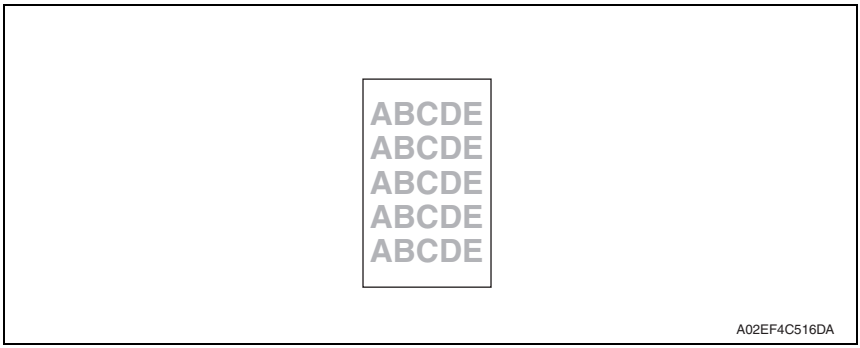

B. Troubleshooting procedure

Step	Section	Check item	Result	Action
1	Paper	Paper is damp.	YES	Change paper to one just unwrapped from its package.
2	Transfer belt unit	Terminal is dirty.	YES	Clean.
3	Transfer roller unit	Transfer roller is installed properly.	NO	Reinstall.
4		Transfer roller is dirty or scratched.	NO	Change transfer roller unit.
5	IDC sensor	Sensor is dirty.	YES	Clean IDC sensor and execute the image stabilization.
6	Image Process Adjustment → X-Rite Caribration (Service Mode) *1	"Conv. Value" falls within the specified range as checked through gradation adjust. Dark: 0 ± 100 Highlight: 0 ± 60	YES	Go to step 9.
7	Image Process Adjustment → D Max Density (Service Mode)	The problem has been eliminated through the adjust of D Max Density.	NO	Go to next step.
8	Image Process Adjustment → Stabilizer → Reset + Stabilizer (Service Mode)	After the Initialize + Image Stabilization sequence has been completed, run gradation adjust.	NO	Go to next step.
9		The problem has been eliminated through the checks of steps up to 8.	NO	Change image transfer belt unit. → Change printer control board → Change high voltage unit.

*1: When customer needs high-quality color printing, performing calibration with X-Rite is recommended.

22.3.18 Printer 4-color: poor color reproduction

A. Typical faulty images

A02EF4C527DA

B. Troubleshooting procedure

Step	Section	Check item	Result	Action
1	Paper	Paper is damp.	YES	Change paper to one just unwrapped from its package.
2	Transfer belt unit	Terminal is dirty.	YES	Clean.
3	Transfer roller unit	Transfer roller is installed properly.	NO	Reinstall.
4		Transfer roller is dirty or scratched.	NO	Change transfer roller unit.
5	IDC sensor	Sensor is dirty.	YES	Clean IDC sensor and execute the image stabilization.
6	Image Process Adjustment → X-Rite Caribration (Service Mode) *1	"Conv. Value" falls within the specified range as checked through gradation adjust. Dark: 0 ± 100 Highlight: 0 ± 60	YES	Go to step 9.
7	Image Process Adjustment →D Max Density (Service Mode)	The problem has been eliminated through the adjust of D Max Density.	NO	Go to next step.
8	Image Process Adjustment → Stabilizer → Reset + Stabilizer (Service Mode)	After the Reset + Stabilizer sequence has been completed, run gradation adjust.	NO	Go to next step.
9		The problem has been eliminated through the checks of steps up to 8.	NO	Change image transfer belt unit. → Change printer control board → Change high voltage unit.

*1: When customer needs high-quality color printing, performing calibration with X-Rite is recommended.

22.3.19 Printer 4-color: incorrect color image registration

A. Typical faulty images

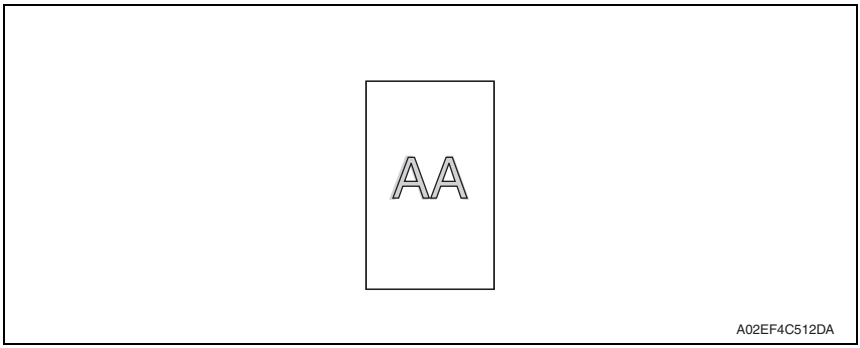

B. Troubleshooting procedure

Step	Section	Check item	Result	Action
1	Warning display	The warning code is displayed on the panel.	YES	Take action according to the warning code shown on the state confirm screen.
2	Machine condition	Vibration is given to the machine after power switch has been turned ON.	YES	Turn off the power switch and turn it on again more than 10 seconds after.
3	Transfer belt unit	Fingerprints, oil, or other foreign matter is evident on the transfer belt.	YES	Clean.
4		Transfer belt is dirty or scratched.	YES	Clean dirty belt with a soft cloth. Change transfer belt unit if belt is damaged.
5		Drive coupling to the machine is dirty.	YES	Clean.
6	Imaging unit	The surface of the PC drum is scratched.	YES	Change imaging unit.
7	Transfer roller unit	Transfer roller is installed properly.	NO	Reinstall.
8		Transfer roller is dirty or scratched.	YES	Change transfer roller unit.
9	Machine → Fusing Transport Speed (Service Mode)	Brush effect or blurred image occurs.	YES	Readjust fusing transport speed.
10	Machine → Color registration Adjustment (Service Mode)	Check the specific color in which color shift occurs.	YES	Perform “Color registration Adjustment.” If color shift is not corrected even with a correction of ± 1 dot, go to next step.
11		The problem has been eliminated through the checks of steps up to 10.	NO	Change transfer belt unit. → Change printer control board

22.3.20 Printer 4-color: void areas, white spots

A. Typical faulty images

Void areas

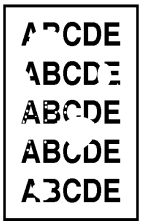

White spots

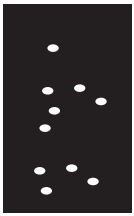

A02EF4C523DA

B. Troubleshooting procedure

Step	Section	Check item	Result	Action
1	Image check	There are void areas at the front side or high density section.	YES	P.490
2		There are void areas in the trailing edge.	YES	Perform [Transfer Output Fine Adjustment] of [Image Process Adjustment] under Service Mode.
3	Transfer belt unit	Fingerprints, oil, or other foreign matter is evident on the transfer belt.	YES	Clean.
4		Transfer belt is dirty or scratched.	YES	Clean dirty belt with a soft cloth. Change transfer belt unit if belt is damaged.
5	Transfer roller unit	Transfer roller is dirty or scratched.	YES	Change 2nd image transfer roller unit.
6		Charge neutralizing cloth is not separated and ground terminal is connected properly.	NO	Correct or change.
7	Paper path	There is foreign matter on paper path.	YES	Remove foreign matter.
8		Pre-image transfer guide plate is damaged or dirty.	YES	Clean or change.
9		The problem has been eliminated through the checks of steps up to 8.	NO	Change transfer belt unit.

22.3.21 Printer 4-color: colored spots

A. Typical faulty images

A02EF4C509DA

B. Troubleshooting procedure

Step	Section	Check item	Result	Action
1	Imaging unit	The surface of the PC drum is scratched.	YES	Change imaging unit.
2	Transfer belt unit	Fingerprints, oil, or other foreign matter is evident on the image transfer belt.	YES	Clean.
3		Transfer belt is dirty or scratched.	YES	Clean dirty belt with a soft cloth. Change transfer belt unit if belt is damaged.
4	Transfer roller unit	Transfer roller is dirty or scratched.	YES	Change transfer roller unit.
5	Paper path	There is foreign matter on paper path.	YES	Remove foreign matter.
6	Fusing unit	Fusing belt is dirty or scratched.	YES	Change fusing unit.
7		The problem has been eliminated through the checks of steps up to 6.	NO	Change transfer belt unit.

22.3.22 Printer 4-color: poor fusing performance, offset

A. Typical faulty images

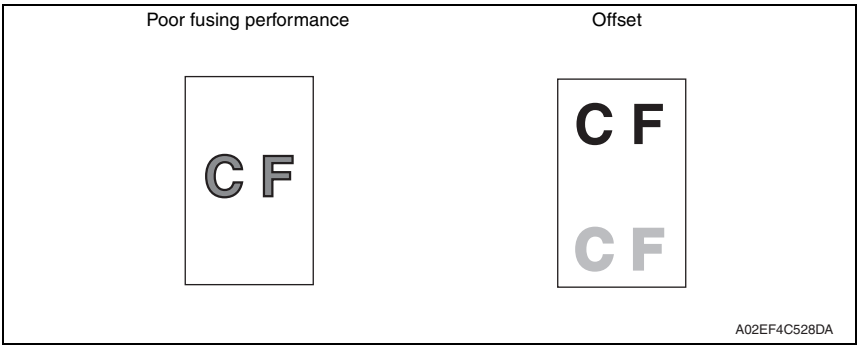

B. Troubleshooting procedure

Step	Section	Check item	Result	Action
1	Paper	Paper type does not match.	YES	Change the setting.
2	Machine→ Fusing Temperature (Service Mode)	Changing fusing temperature eliminates the problem of poor fusing performance and offset.	YES	Readjust fusing temperature.
3		The problem has been eliminated through the checks of steps up to 2.	NO	Change fusing unit.

22.3.23 Printer 4-color: brush effect, blurred image

A. Typical faulty images

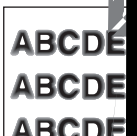

B. Troubleshooting procedure

22.3.24 Printer 4-color: back marking

A. Typical faulty images

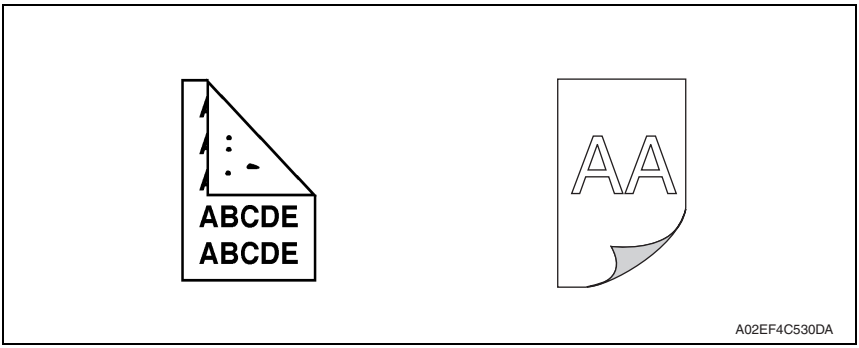

B. Troubleshooting procedure

Step	Section	Check item	Result	Action
1	2nd image transfer roller unit	Image transfer roller is scratched or dirty.	YES	Change transfer roller unit.
2	Paper path	There is foreign matter on paper path.	YES	Remove foreign matter.
3	Fusing unit	Fusing entrance guide plate is scratched or dirty.	YES	Clean or change.
4		Lower fusing roller is scratched or dirty.	YES	Change fusing unit.
5	Transfer belt unit	Fingerprints, oil, or other foreign matter is evident on the transfer belt.	YES	Clean.
6		The problem has been eliminated through the checks of steps up to 5.	NO	Change transfer belt unit. → Change high voltage unit.

22.3.25 Printer 4-color: uneven image

A. Typical faulty images

A02EF4C525DA

B. Troubleshooting procedure

Step	Section	Check item	Result	Action
1	Toner cartridge	The toner cartridge of every color is surely installed.	NO	Re-install it.
2	PH unit	The PH unit is surely installed.	NO	Re-install it.
3	Toner cartridge	There is any stain or breakage on the drive section of the toner cartridge.	YES	Clean/replace the toner cartridge.
4	Imaging unit	There is any stain, damage or abrasion on the PC drum.	YES	Replace the imaging unit.
5	Transfer roller unit	There is any stain, damage, deformation or abrasion on the transfer roller.	YES	Replace the transfer roller unit.
6	Fusing unit	There is any stain, damage, deformation or abrasion on the roller and drive section of the fusing unit.	YES	Replace the fusing unit.
7		The problem has been eliminated through the check of step 6.	NO	Replace the transfer belt unit.

23. Controller trouble

23.1 Unable to print over the network

23.1.1 The “RIP” is displayed on the machine control panel.

Step	Check	Result	Action
1	An error on machine side (Paper running out, toner running out, etc.)	Yes	Correct the error.
2	Waiting its turn	Yes	Check the machine control panel for jobs in print queue. Priority may be changed as necessary
3	The job is locked.	Yes	Enter the password to unlock the job.
4	The correct division ID has not been entered.	Yes	Enter the correct division ID in the printer driver and try re-transmitting the job again.(account code)

23.1.2 The “RIP” is not displayed on the machine control panel.

Step	Check	Result	Action
1	The response of ping sent from the PC to the machine.	No	Go to item 5.
2	The print destination port setting is wrong.	Yes	Set the correct port.
3	PC operates erratically temporarily.	Yes	Restart the PC
4	Printer driver incorrectry installed.	No	Uninstall the printer driver through the proper steps and then reinstall it properly.
5	The power on the machine turns OFF/ON and operates normally.	Yes	No process is necessary. Only a temporally malfunction.
6	Network cable is disconnected or a relay device is faulty.	No	Reconnect the cable and restart or change the faulty relay device.
7	IP address and/or subnet mask incorrectly set.	No	Set the correct IP address and subnet mask.

Appendix

24. Parts layout drawing

24.1 Main body

24.1.1 Engine section

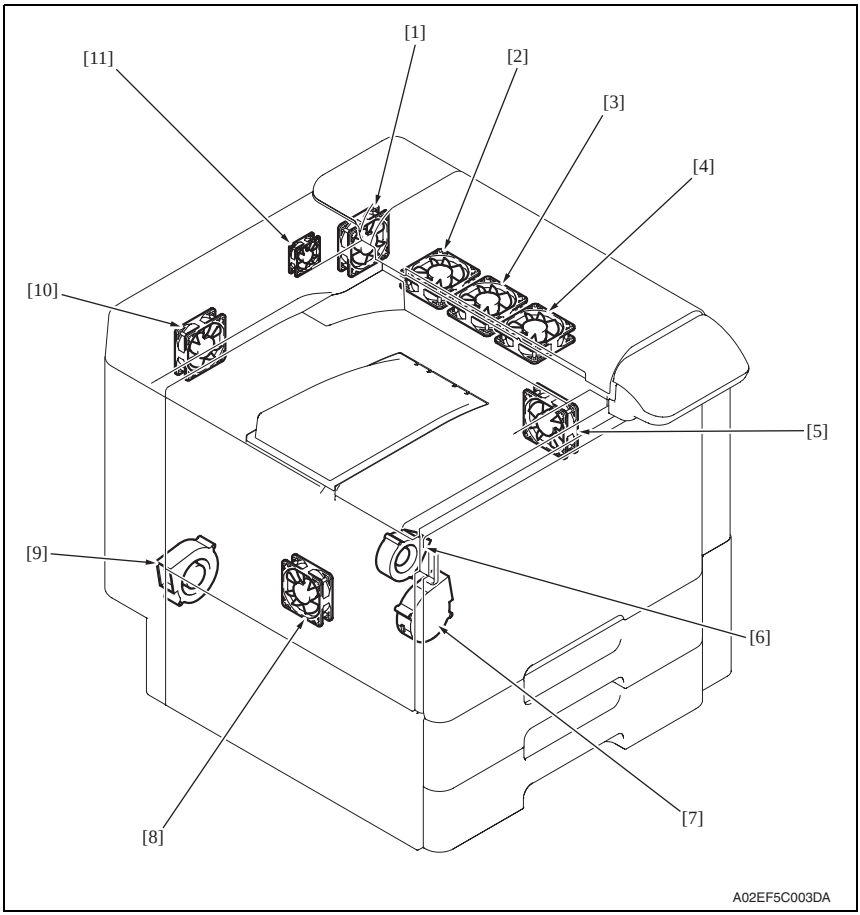

⚠1 [1] Paper cooling fan motor (FM7)
[2] Fusing cooling fan motor/2 (FM10)
[3] Fusing cooling fan motor/3 (FM11) *
[4] Fusing cooling fan motor/1 (FM9)
[5] Suction fan motor (FM8)
⚠1 [6] Toner suction fan motor (FM3)
[7] Cooling fan motor/1 (FM1)
[8] Power supply cooling fan motor (FM5)
[9] Exhaust fan motor (FM4)
[10] Cooling fan motor/2 (FM2)
[11] MFP board cooling fan motor (FM6)

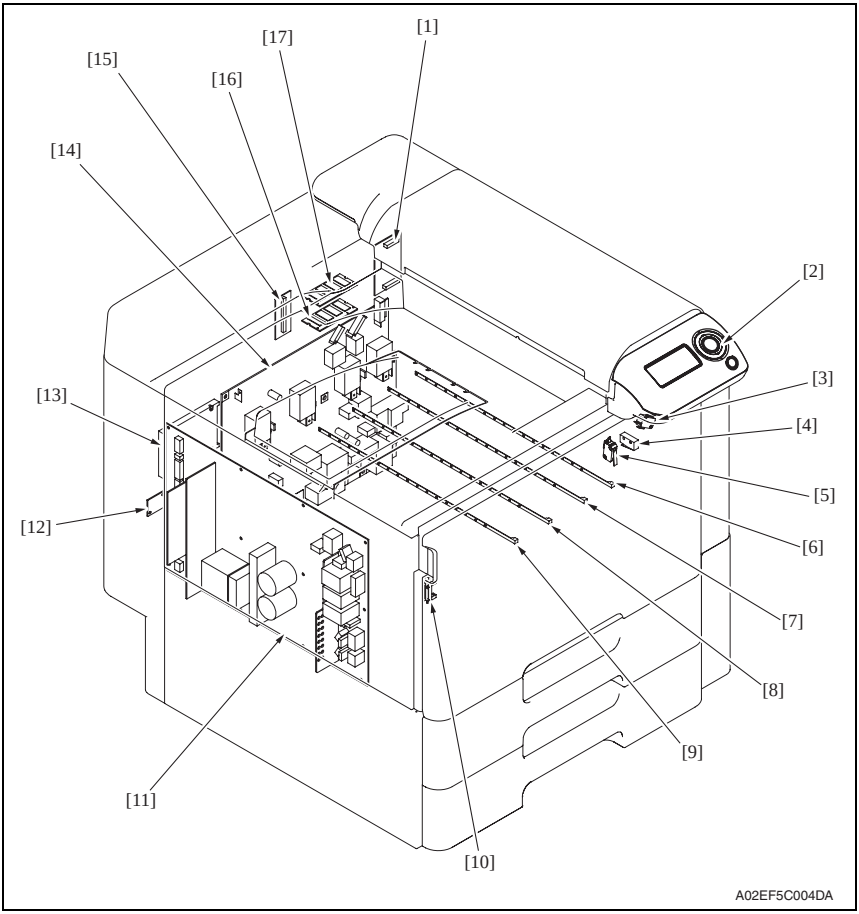

[1] NVRAM board (NRB)
[2] Operation board (OB)
[3] Right door switch (S5)
[4] Front door switch/1 (S3)
[5] Front door switch/2 (S4)
[6] Erase lamp/K (EL/K)
[7] Erase lamp/C (EL/C)
[8] Erase lamp/M (EL/M)
[9] Erase lamp/Y (EL/Y)
[10] Waste toner full sensor (PS32)
[11] DC power supply (DCPU)
[12] Service EEPROM board (SV ERB)
[13] Hard disk (HDD) *1
[14] High voltage unit (HV)
[15] JMP board (JMPB)
[16] SO DIMM/1 (SO DIMM/1)
[17] SO DIMM/2 (SO DIMM/2)

*1: Option

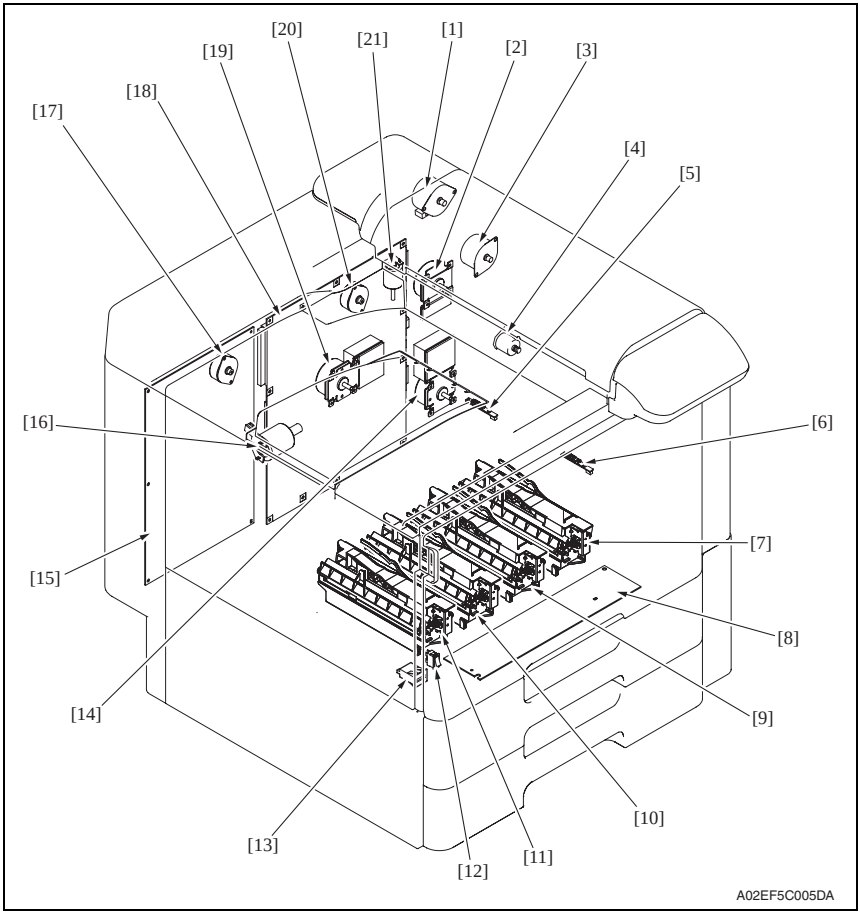

[1] Switchback motor (M6)
[2] Fusing motor (M5)
[3] Duplex transport motor (M7)
[4] 2nd image transfer retraction motor (M11)
[5] IDC registration sensor/YC (IDCS/YC)
[6] IDC registration sensor/MK (IDCS/MK)
[7] PH unit/K
[8] PH relay board (PHREYB)
[9] PH unit/C
[10] PH unit/M
[11] PH unit/Y
[12] Main power switch (S1)
[13] Total counter (TCT)
[14] Transport motor (M1)
[15] Printer control board (PRCB)
[16] Color dev. unit engaged motor (M10)
[17] Toner supply motor/YM (M4)
[18] MFP board (MFPB)
[19] Color PC motor (M2)
[20] Toner supply motor/CK (M3)
[21] Fusing retraction motor (M12)

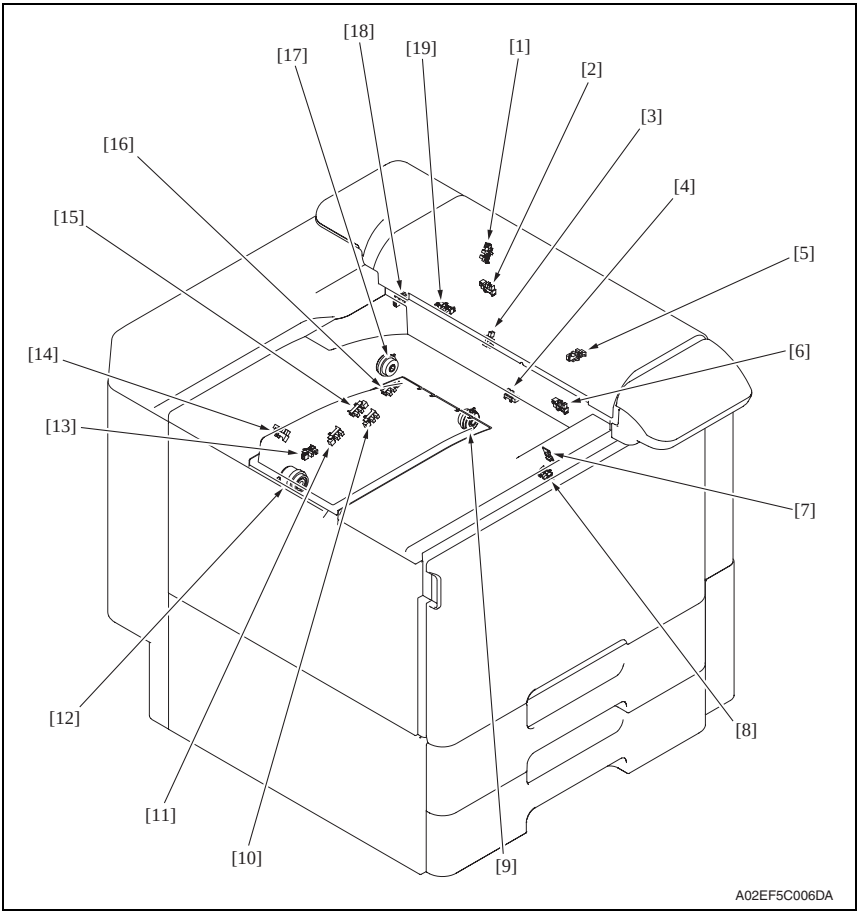

[1] Duplex paper passage sensor/1 (PS33)
[2] Duplex door sensor (PS35)
[3] Duplex paper passage sensor/2 (PS34)
[4] 2nd image transfer welding alienation sensor (PS36)
[5] Fusing retraction sensor (PS37)
[6] Fusing loop detect sensor (PS24)
[7] Temperature/humidity sensor (TEM/HUM)
[8] Sensor in front of tim. roller (PS23)
[9] Developing clutch/K (CL5)
[10] Black PC drive main sensor (PS29)
[11] Color PC drive main sensor (PS27)
[12] Transfer belt retraction clutch (CL7)
[13] Transfer belt retraction sensor (PS31)
[14] Color dev. unit engaged position sensor (PS26)
[15] Color PC drive sub sensor (PS28)
[16] Black PC drive sub sensor (PS30)
[17] Tim. roller clutch (CL6)
[18] Fusing roller retraction sensor (PS38)
[19] Paper exit sensor (PS25)

24.1.2 Tray 1, manual bypass tray

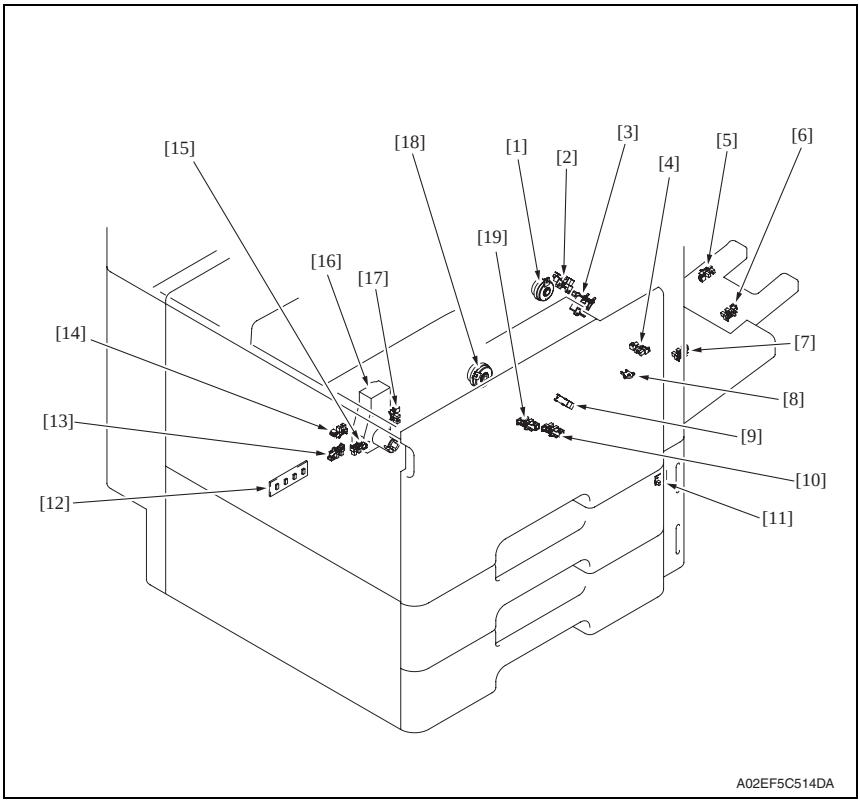

[1]	Manual paper feed clutch (CL4)	[11]	Paper feed tray 1 paper empty indicator board (PEIB/1)
[2]	Manual lift-up position sensor (PS17)	[12]	Paper feed tray 1 paper FD size detect board (PSDTB/1)
[3]	Manual pick-up solenoid (SL1)	[13]	Paper feed tray 1 paper CD size detect sensor/2 (PS6)
[4]	Manual paper empty sensor (PS21)	[14]	Paper feed tray 1 device detection sensor (PS2)
[5]	Manual multi FD size sensor/3 (PS20)	[15]	Paper feed tray 1 paper CD size detect sensor/1 (PS5)
[6]	Manual multi FD size sensor/2 (PS19)	[16]	Paper feed tray 1 lift-up motor (M8)
[7]	Manual multi FD size sensor/1 (PS18)	[17]	Paper feed tray 1 near empty sensor (PS4)
[8]	Manual CD size sensor (PS22)	[18]	Paper feed tray 1 paper feed clutch (CL1)
[9]	Paper feed tray 1 chain feed sensor (PS1)	[19]	Paper feed tray 1 upper limit sensor (PS8)
[10]	Paper feed tray 1 paper empty sensor (PS7)		

24.1.3 Tray 2

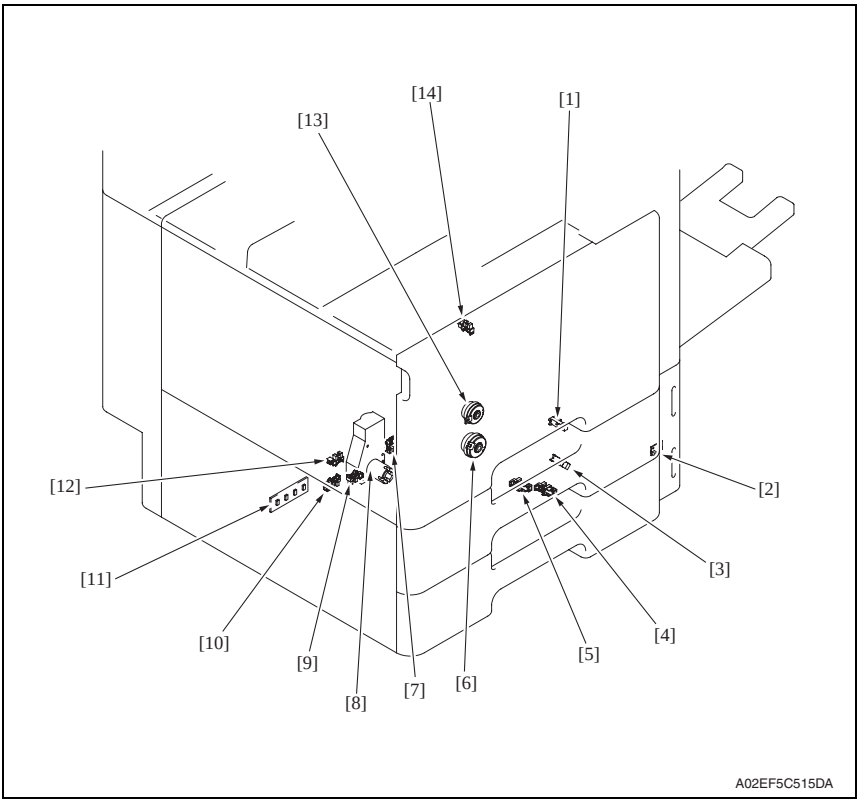

[1]	Paper feed tray 2 vertical transport sensor (PS16)	[8]	Paper feed tray 2 lift-up motor (M9)
[2]	Paper feed tray 2 paper empty indicator board (PEIB/2)	[9]	Paper feed tray 2 paper CD size detect sensor/1 (PS11)
[3]	Paper feed tray 2 paper feed sensor (PS14)	[10]	Paper feed tray 2 paper CD size detect sensor/2 (PS12)
[4]	Paper feed tray 2 paper empty sensor (PS13)	[11]	Paper feed tray 2 paper FD size detect board (PSDTB/2)
[5]	Paper feed tray 2 upper limit sensor (PS15)	[12]	Paper feed tray 2 device detection sensor (PS10)
[6]	Paper feed tray 2 paper feed clutch (CL2)	[13]	Paper feed tray 2 vertical transport clutch (CL3)
[7]	Paper feed tray 2 near empty sensor (PS9)	[14]	Paper feed tray 2 door sensor (PS3)

24.2 PC-104/204 (option)

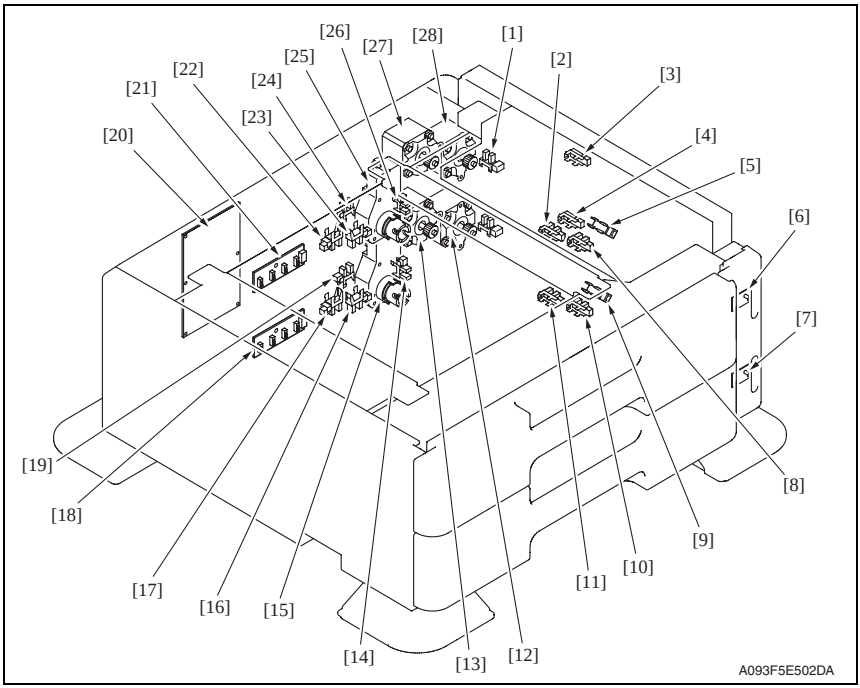

[1] Tray3 door set sensor (PS111)
[2] Tray3 upper limit sensor (PS114)
[3] Tray3 vertical transport sensor (PS117)
[4] Tray4 vertical transport sensor (PS126)
[5] Tray3 paper feed sensor (PS116)
[6] Paper feed tray3 paper empty indicator board (PEIB/1)
[7] Paper feed tray4 paper empty indicator board (PEIB/2)
[8] Tray3 empty sensor (PS115)
[9] Tray4 paper feed sensor (PS125)
[10] Tray4 empty sensor (PS124)
[11] Tray4 upper limit sensor (PS123)
[12] Tray4 vertical transport motor (M121)
[13] Tray4 paper feed motor (M123)
[14] Tray4 near empty sensor (PS122)
[15] Tray4 lift-up motor (M125)
[16] Tray4 CD paper size sensor/2 (PS128)
[17] Tray4 CD paper size sensor/1 (PS127)
[18] Tray4 paper size detect board/2 (PSDTB/2)
[19] Tray4 device detection sensor (PS121)
[20] PC Control board (PCCB)
[21] Tray3 paper size detect board/1 (PSDTB/1)
[22] Tray3 CD paper size sensor/1 (PS118)
[23] Tray3 CD paper size sensor/2 (PS119)
[24] Tray3 device detection sensor (PS112)
[25] Tray3 lift-up motor (M124)
[26] Tray3 near empty sensor (PS113)
[27] Tray3 paper feed motor (M122)
[28] Tray3 vertical transport motor (M120)

24.3 PC-405 (option)

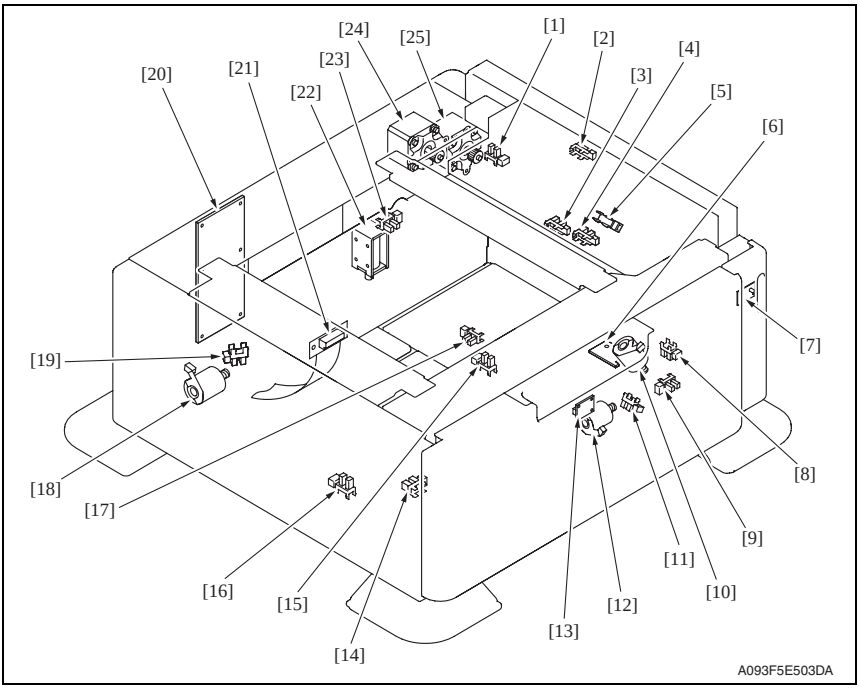

[1] Door sensor (PS5)
[2] Vertical transport sensor (PS2)
[3] Lift-up upper sensor (PS4)
[4] Paper empty sensor (PS3)
[5] Paper feed sensor (PS1)
[6] Main tray paper empty board (MTPEB)
[7] Paper feed tray3 paper empty indicator board (PEIB/1)
[8] Elevator motor pulse sensor (PS10)
[9] Lower over run sensor (PS7)
[10] Elevator motor (M5)
[11] Shift motor pulse sensor (PS8)
[12] Shift motor (M4)
[13] Manual down control board (MDCB)
[14] Shift tray empty sensor (PS9)
[15] Shift tray stop sensor (PS11)
[16] Shift tray home sensor (PS12)
[17] Lift-up lower sensor (PS13)
[18] Division board position motor (M3)
[19] Division board position sensor (PS14)
[20] PC control board (PCCB)
[21] Relay board (REYB)
[22] Tray lock solenoid (SD1)
[23] Cassette open sensor (PS6)
[24] Paper feed motor (M1)
[25] Vertical transport motor (M2)

24.4 FS-519 (option)

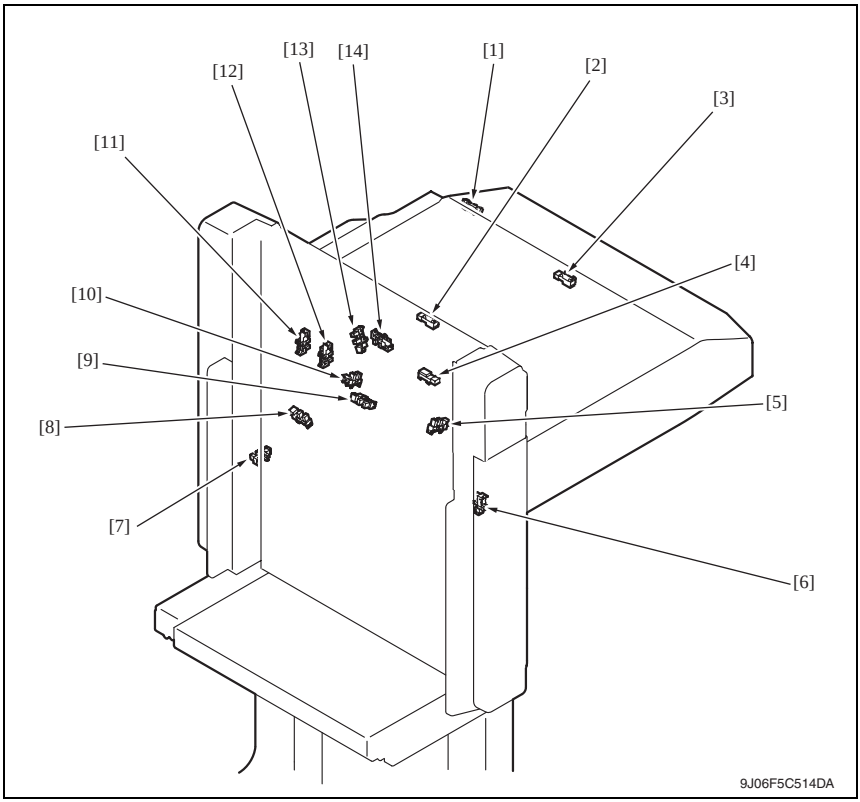

[1] Entrance switch back sensor (PS4)
[2] Transport sensor (PS2)
[3] Entrance sensor (PS1)
[4] Storage tray detect sensor (PS3)
[5] Alignment home position sensor /2 (PS8)
[6] Elevator tray home position sensor (PS11)
[7] Elevator tray lower limit sensor (PS13)
[8] Elevator top face detection sensor (PS12)
[9] Exit paddle home position sensor (PS6)
[10] Alignment home position sensor /1 (PS7)
[11] Stapler save position sensor (PS10)
[12] Staple home position sensor (PS9)
[13] Shutter home position sensor (PS14)
[14] Exit roller home position sensor (PS5)

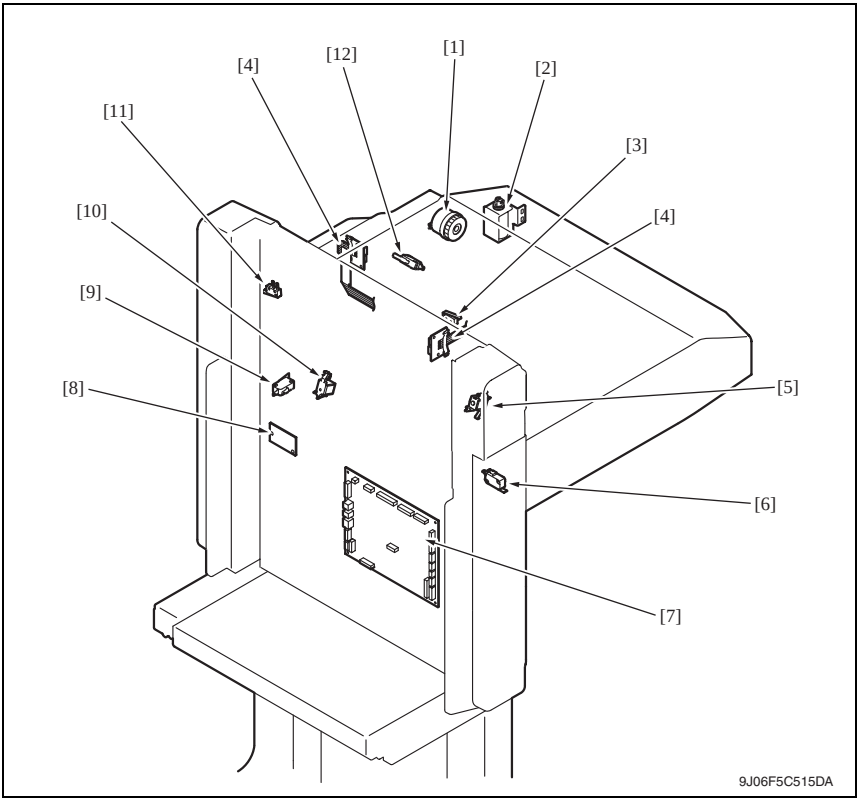

[1] Skew registration clutch (CL1)
[2] Duplex guide solenoid (SD3)
[3] Shutter detect switch (SW2)
[4] Relay board/2 (REYB/2)
[5] Storage paddle solenoid (SD1)
[6] Front door switch (SW1)
[7] FS control board (FSCB)
[8] Relay board/1 (REYB/1)
[9] Slide switch (SW4)
[10] Exit paddle solenoid (SD2)
[11] Elevator tray switch (SW3)
[12] Middle guide switch (SW5)

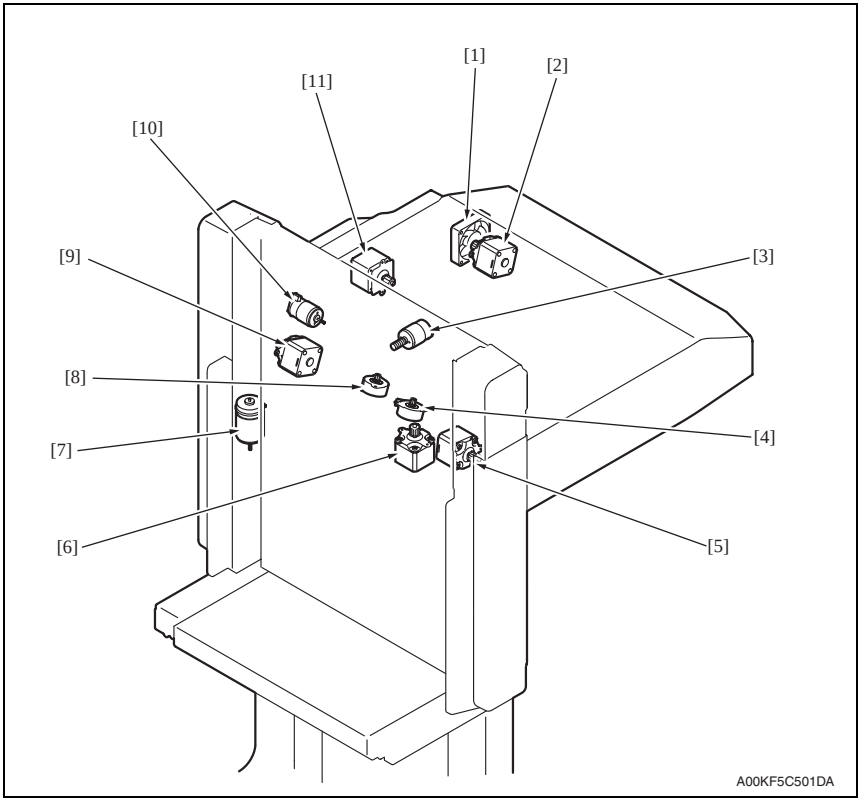

[1] Cooling fan motor (FM9)
[2] Entrance motor (M1)
[3] Exit roller motor (M10)
[4] Align motor/2 (M6)
[5] Exit motor (M4)
[6] Stapling unit moving motor (M7)
[7] Elevator motor (M11)
[8] Align motor/1 (M5)
[9] Transport motor/2 (M3)
[10] Shutter motor (M8)
[11] Transport motor/1 (M2)

24.5 PK-515 (option)

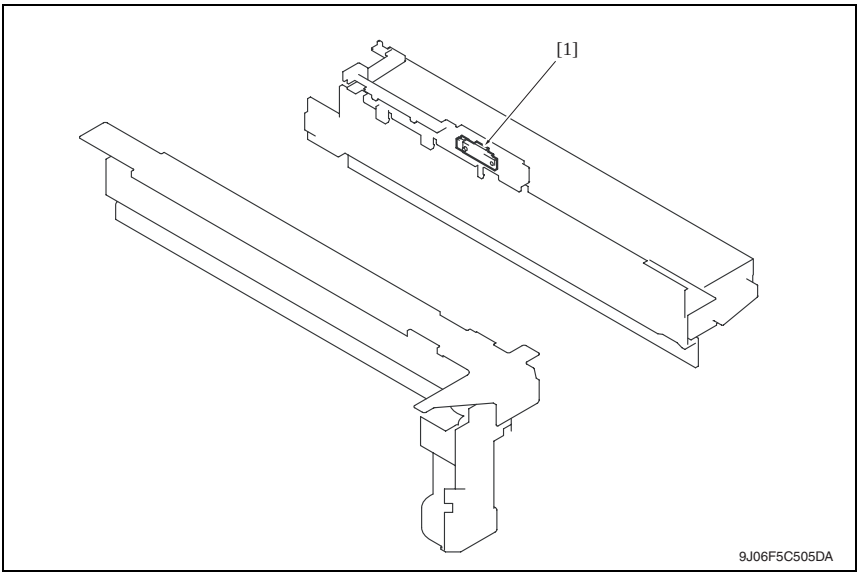

[1] Punch trash full sensor (PS30)

24.6 MT-502 (option)

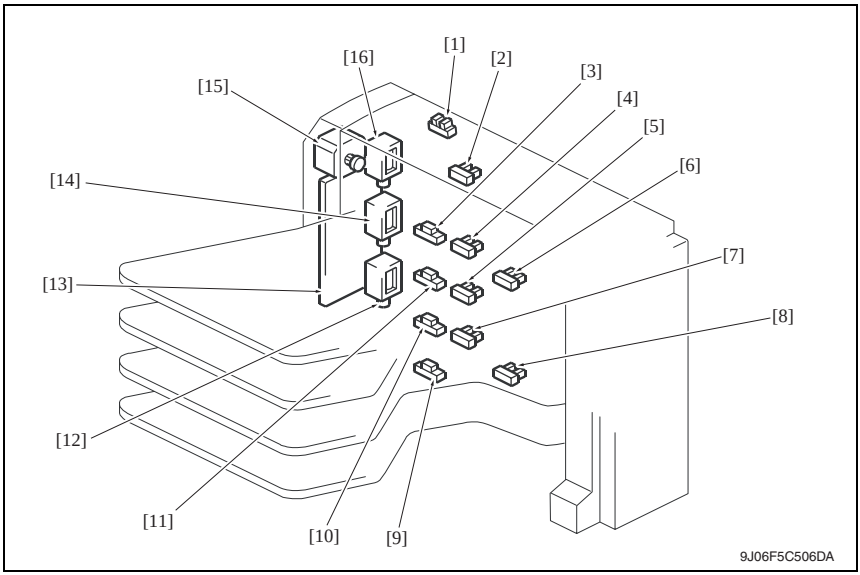

[1] Cover open/close sensor (PS11)
[2] Paper full detection sensor 4 (PS8)
[3] Paper detection sensor 4 (PS4)
[4] Paper full detection sensor 3 (PS7)
[5] Paper full detection sensor 2 (PS6)
[6] Upper transport sensor (PS9)
[7] Paper full detection sensor 1 (PS5)
[8] Lower transport sensor (PS10)
[9] Paper detection sensor 1 (PS1)
[10] Paper detection sensor 2 (PS2)
[11] Paper detection sensor 3 (PS3)
[12] Bin entrance switching solenoid 1 (SD1)
[13] MT control board (MTCB)
[14] Bin entrance switching solenoid 2 (SD2)
[15] Transport motor (M1)
[16] Bin entrance switching solenoid 3 (SD3)

24.7 SD-505 (option)

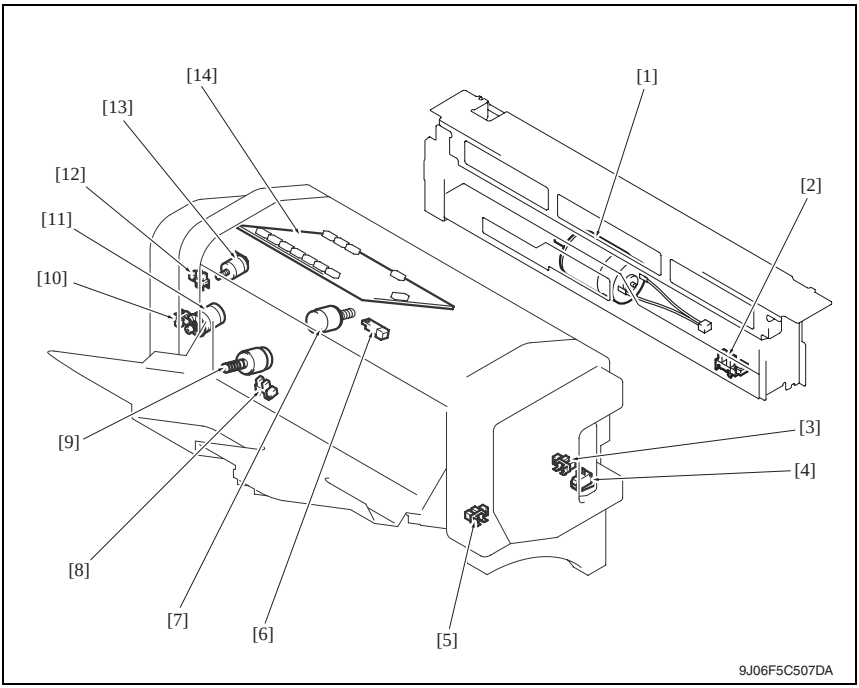

[1] Crease motor (M10)
[2] Crease roller home position sensor (PS22)
[3] Layable guide home sensor (PS24)
[4] Saddle opening switch (SW4)
[5] In & out guide home sensor (PS23)
[6] Saddle exit sensor (PS20)
[7] Layable guide motor (M14)
[8] Saddle tray empty sensor (PS21)
[9] In & out guide motor (M13)
[10] Transport pulse sensor (PS25)
[11] Saddle exit motor (M8)
[12] Saddle exit roller home position sensor (PS18)
[13] Saddle exit open/close motor (M9)
[14] SD control board (SDCB)

24.8 FS-609 (option)

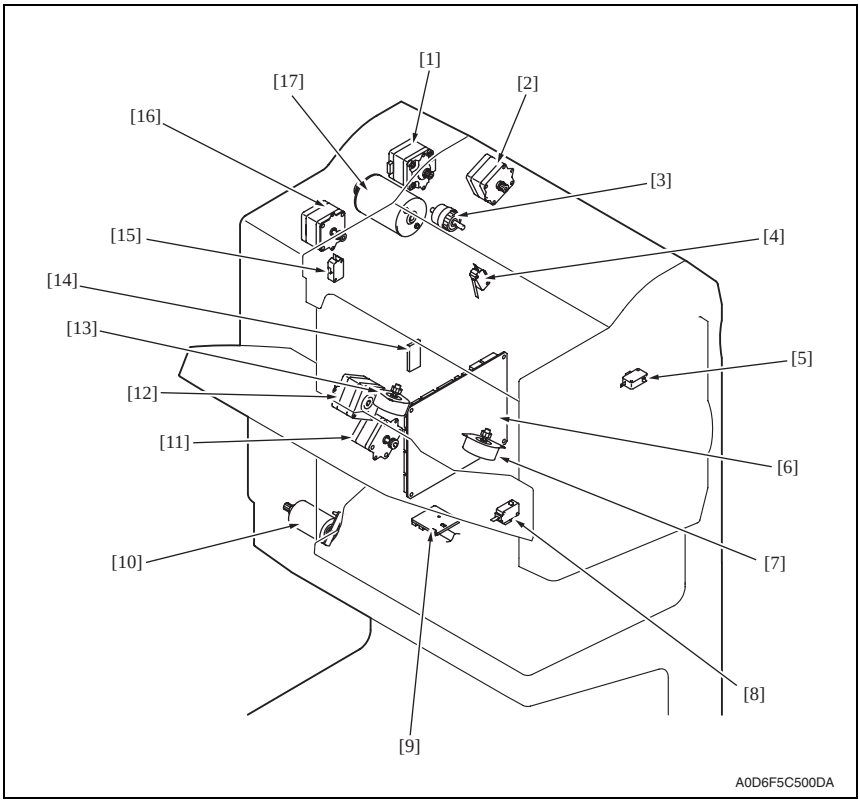

[1] Transport motor (M1)
[2] Entrance motor (M9)
[3] Saddle clutch (CL1)
[4] Joint open switch (SW2)
[5] Front door open switch (SW1)
[6] Finisher control board (FSCB)
[7] Front aligning motor (M4)
[8] Stapler safely switch/F (SW4)
[9] Slide home position sensor (PS18)
[10] Lift motor (M6)
[11] Slide motor (M8)
[12] Exit motor (M3)
[13] Rear aligning motor (M5)
[14] EEPROM (ER)
[15] Stapler safely switch/R (SW3)
[16] Paddle motor (M2)
[17] Staple/folding motor (M7)

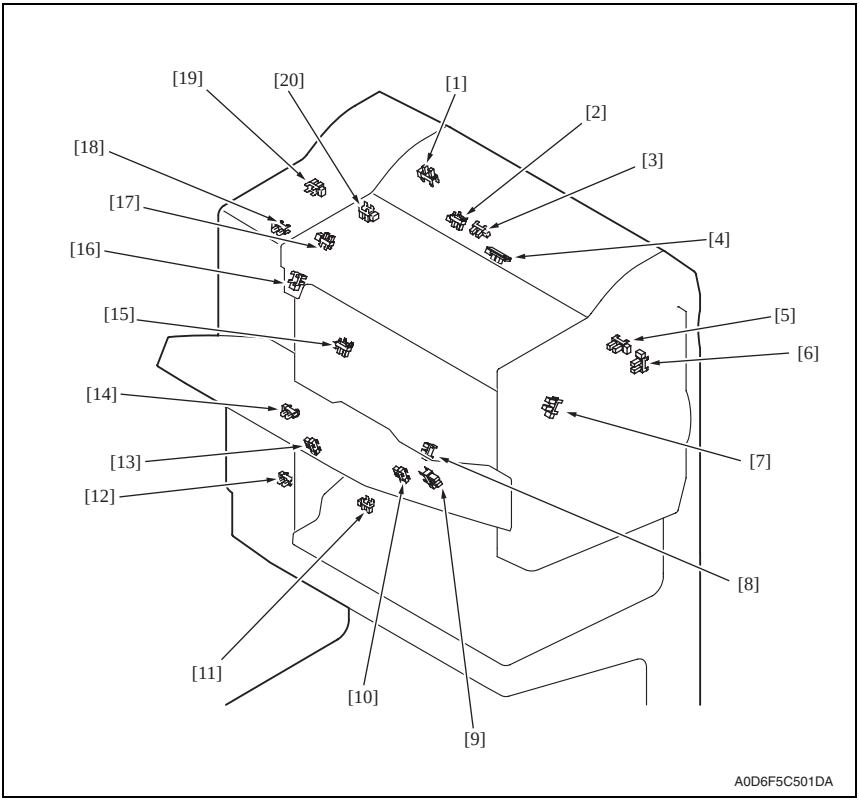

[1]	Entrance sensor (PS1)	[11]	Saddle tray sensor (PS13)
[2]	Folding roller home position sensor (PS12)	[12]	Lift motor clock sensor (PS17)
[3]	Folding home position sensor (PS11)	[13]	Stack full sensor (PS24)
[4]	Folding position sensor (PS10)	[14]	Lift lower limit sensor (PS16)
[5]	Upper cover open sensor (PS23)	[15]	Exit belt home position sensor (PS7)
[6]	Front door open sensor (PS22)	[16]	Rear aligning plate home position sensor (PS5)
[7]	Front aligning plate home position sensor (PS4)	[17]	Paddle home position sensor (PS2)
[8]	Finisher tray sensor (PS6)	[18]	Lift upper limit sensor (PS15)
[9]	Exit tray sensor (PS8)	[19]	Staple/folding motor clock sensor (PS14)
[10]	Exit tray home position sensor (PS9)	[20]	Bundle exit roller home position sensor (PS3)

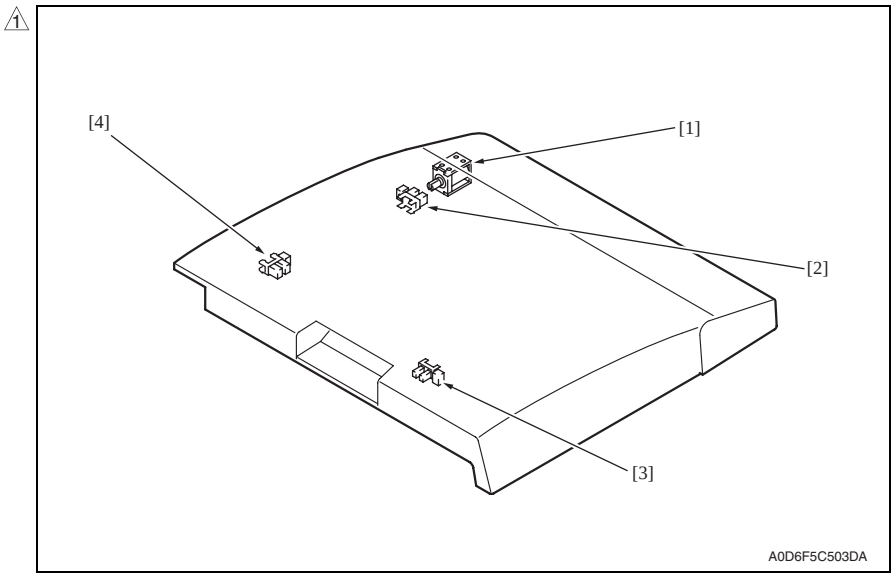

[1] Entrance switching solenoid (SD1)
[2] Turnover empty sensor (PS27)
[3] Paper sensor (PS25)
[4] Horizontal unit door sensor (PS26)

24.9 PK-501 (option)

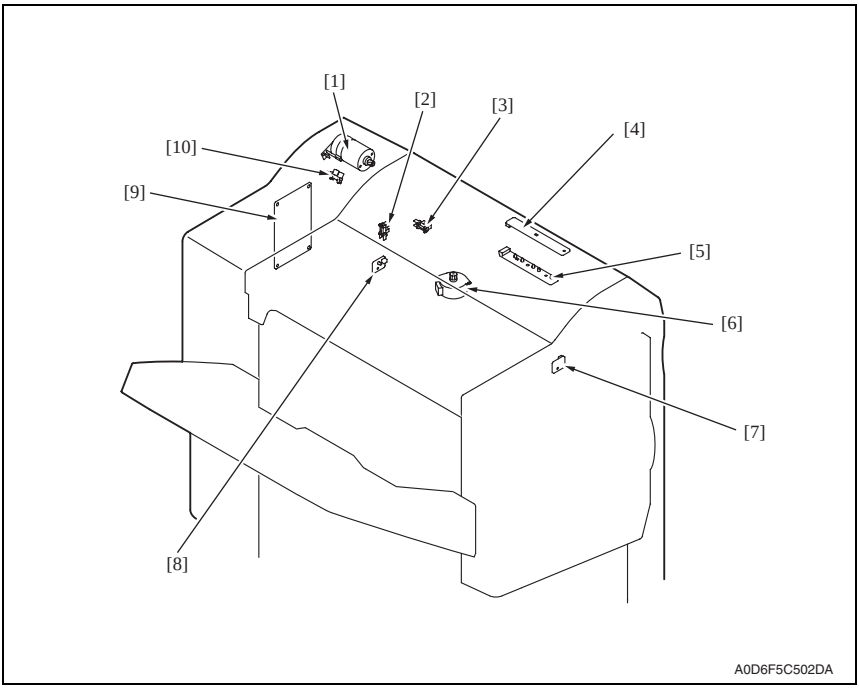

[1] Punch motor (M1)
[2] Side registration home sensor (PS2)
[3] Punch motor cock sensor (PS3)
[4] Photo sensor board (PSB)
[5] LED board (LEDB)
[6] Side registration motor (M2)
[7] Punch trash full LED board (PTFB/LED)
[8] Punch trash full photo sensor board (PTFB/PR)
[9] Punch control board (PKCB)
[10] Punch home position sensor (PS1)

25. Connector layout drawing

Description

Number of pin → ① Possible to confirm by removing external cover.

→ 1 Not possible to confirm by removing external cover.

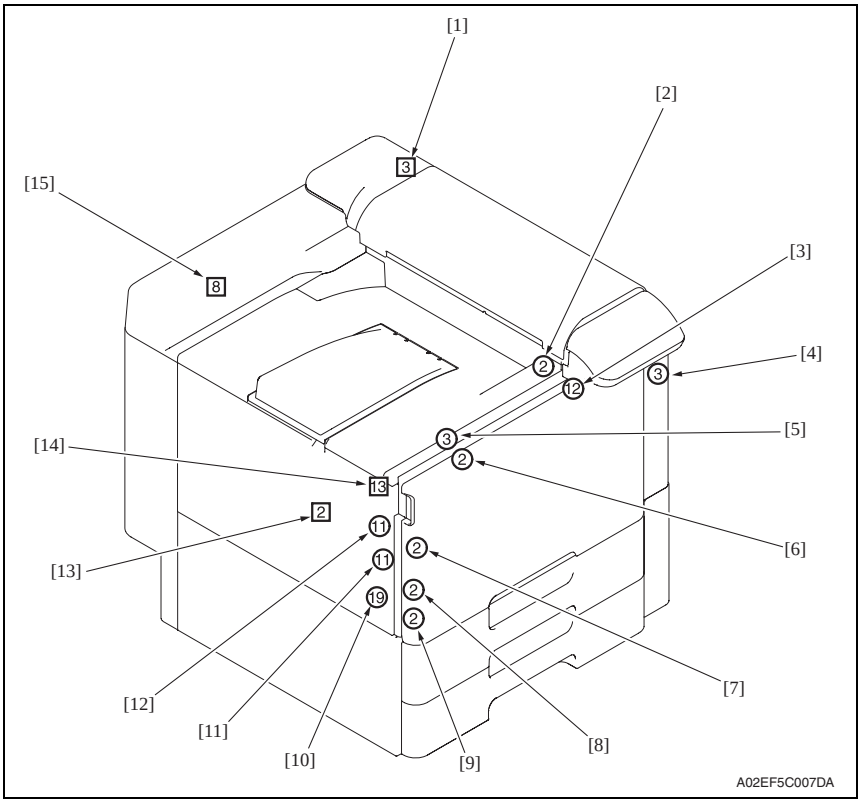

No.	CN No.	Location	No.	CN No.	Location
[1]	CN10	E-6	[9]	CN15	D-11
[2]	CN2	E-1	[10]	CN13	E-9 to 10
[3]	CN4	E-2	[11]	CN11	E-8
[4]	CN8	D-5	[12]	CN7	E-5
[5]	CN5	E-3	[13]	CN9	E-6
[6]	CN3	E-1	[14]	CN6	E-3 to 4
[7]	CN12	D-9	[15]	CN39	J-8
[8]	CN14	D-11			

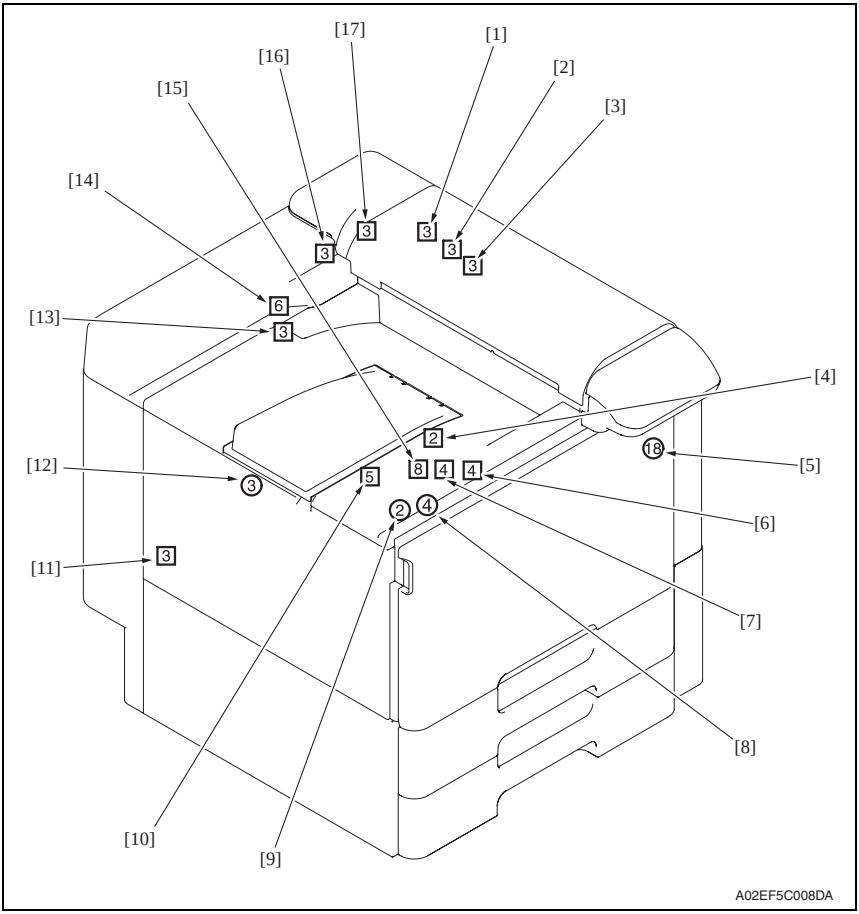

No.	CN No.	Location	No.	CN No.	Location
[1]	CN23	D-18	[10]	CN19	E-17 to 18
[2]	CN25	D-19	[11]	CN37	J-7 to 8
[3]	CN26	D-19	[12]	CN38	J-8
[4]	CN20	D-17	[13]	CN22	E-18
[5]	CN27	D-19 to 20	[14]	CN24	E-19
[6]	CN18	E-17	[15]	CN16	E-14
[7]	CN17	E-16	[16]	CN32	D-24
[8]	CN49	J-17	[17]	CN31	D-24
[9]	CN48	J-17			

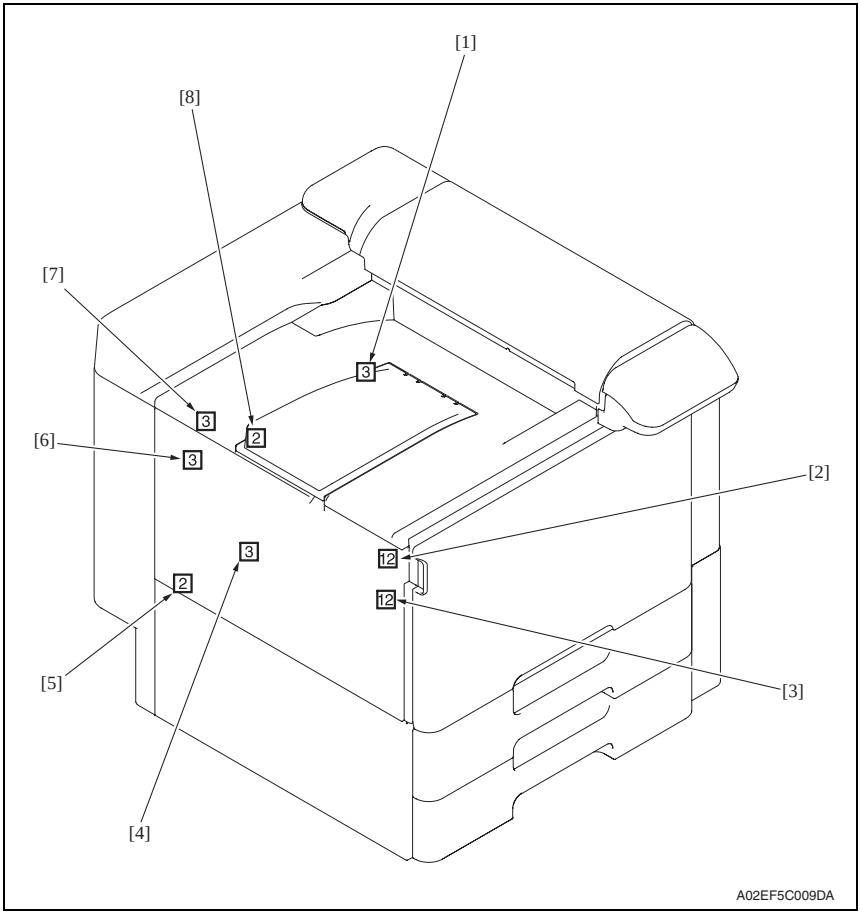

No.	CN No.	Location	No.	CN No.	Location
[1]	CN40	I-9	[5]	CN55	J-16
[2]	CN42	I-11	[6]	CN35	J-7
[3]	CN41	I-10	[7]	CN36	J-7
[4]	CN33	D-26 to 27	[8]	CN30	D-23

26. Timing chart

26.1 Main body

Color mode/A4 or 8 $^1/_2$ x 11/tray1

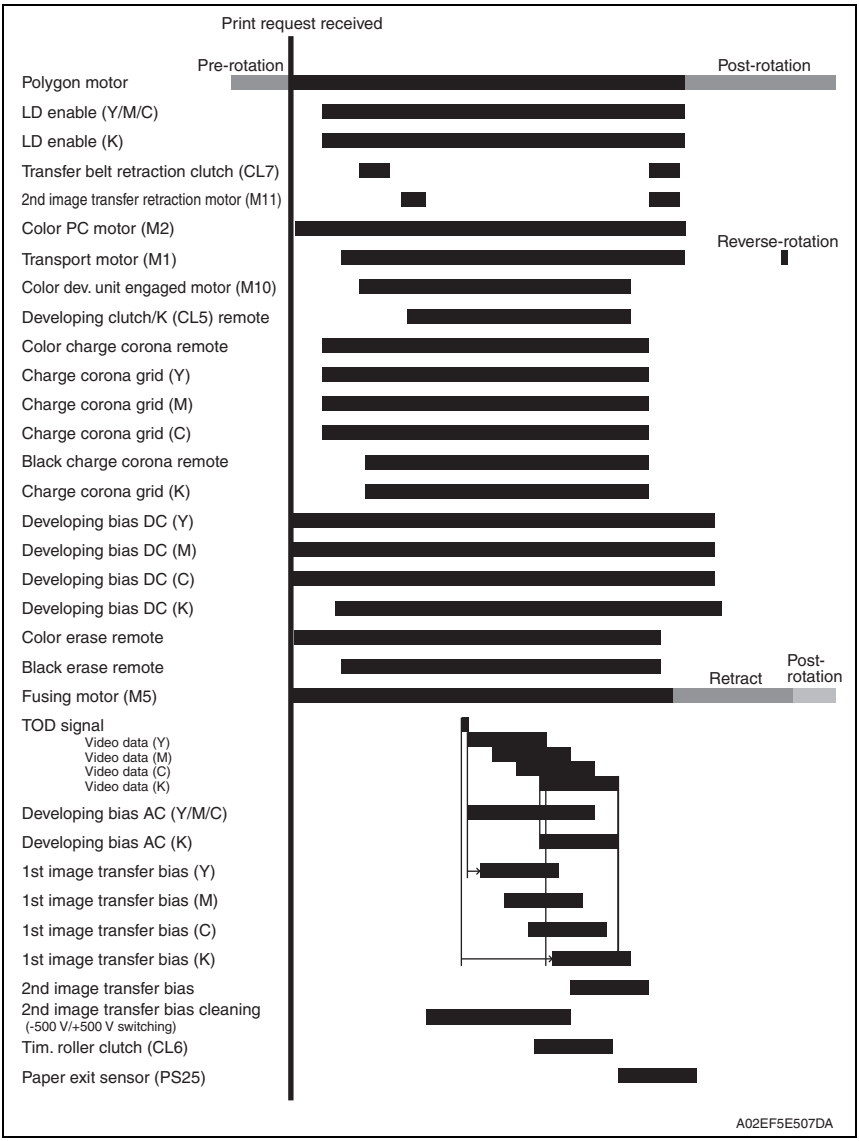

KONICA MINOLTA

SERVICE MANUAL

FIELD SERVICE

bizhub C353P Standard controller

Confidential – for internal use only, do not distribute

2007.11
KONICA MINOLTA BUSINESS TECHNOLOGIES, INC. Ver. 2.0

Revision history

After publication of this service manual, the parts and mechanism may be subject to change for improvement of their performance.
Therefore, the descriptions given in this service manual may not coincide with the actual machine.

When any change has been made to the descriptions in the service manual, a revised version will be issued with a revision mark added as required.

Revision mark:

- To indicate clearly a section revised, show △1 to the left of the revised section.
  A number within △1 represents the number of times the revision has been made.

- To indicate clearly a section revised, show ▲1 in the lower outside section of the corresponding page.
  A number within ▲1 represents the number of times the revision has been made.

NOTE

Revision marks shown in a page are restricted only to the latest ones with the old ones deleted.

- When a page revised in Ver. 2.0 has been changed in Ver. 3.0:
  The revision marks for Ver. 3.0 only are shown with those for Ver. 2.0 deleted.
- When a page revised in Ver. 2.0 has not been changed in Ver. 3.0:
  The revision marks for Ver. 2.0 are left as they are.

Date	Service manual Ver.	Revision mark	Descriptions of revision
2007/11	2.0	△1	Description addition of function enhancement 1
2007/10	1.0	—	Issue of the first edition

CONTENTS

Standard controller

General

1. Controller specifications 1
1.1 Type 1
1.2 Supporting client specifications 2

Maintenance

2. Checking the controller firmware version 3
2.1 Outline 3
2.2 Preparations for firmware rewriting by Windows Command Prompt 3
2.2.1 Service environment 3
2.2.2 Writing into the compact flash 3
2.3 Preparations for firmware rewriting by Firmware Imaging Toolkit 2006 6
2.3.1 Correspond model 6
2.3.2 Function outline 6
2.3.3 System environment 6
2.3.4 Installation of software 7
2.3.5 Update of software 9
2.3.6 Screen 10
2.3.7 Details of each function 12
2.3.8 How to write firmware data 14
2.4 Firmware rewriting by compact flash 19
2.4.1 Updating method 19
2.4.2 Action when data transfer fails 21
2.5 Updating the firmware with the Internet ISW 22
2.5.1 Outline 22
2.5.2 Service environment 22
2.5.3 Preparations for firmware rewriting 22
2.5.4 Firmware rewriting 26
2.5.5 Error code list for the Internet ISW 29

Troubleshooting

3. Checking the system configuration 33
4. Status codes 33
5. Troubleshooting procedures 33
5.1 Unable to print over the network. 33

General

1. Controller specifications

1.1 Type

Type	Built-in type controller	
Print speed	35 prints/min (color/monochrome, A4 or 8 $^1/_2$ x 11, 1-sided)	
First print time	5.9 sec. or less (monochrome, A4 or 8 $^1/_2$ x 11)	
Resolution	Data processing	600 x 600 dpi
	Printing	Equivalent to 1800 dpi in main scanning direction x 600 dpi in sub scanning direction
Printer language	PCL5e/c emulation PCL XL Ver. 2.1 emulation PostScript 3 emulation (3016) XPS Ver. 1.0	
RAM	1024 MB	
Hard Disk	60 GB (Option)	
Host interface	Ethernet (10Base-T/100Base-TX/1000Base-T) USB 2.0/1.1	
Network protocol	TCP/IP(IPv4/IPv6), BOOTP, ARP, ICMP, DHCP, AutoIP, SNMP, FTP, LPR/LPD, RAW Socket, SMB over TCP/IP, IPP, HTTP, POP, SMTP, LDAP, NTP, SSL, IPX/SPX, AppleTalk, Bonjour, NetBEUI, WSD, IPsec, DNS, DynamicDNS	
Network print service	Pserver (NDS) ... NetWare 4.x, 5.x, 6.x Pserver (Bindery) ... NetWare 4.x NDPS ... NetWare 5.x, 6.x SMB, RAW port printing IPP 1.1 LPD	
Driver	PCL6 printer driver	• Windows NT4.0 (SP6a or later) • Windows 2000 Professional (SP3 or later) • Windows XP Home Edition/Professional • Windows XP Professional x64 • Windows Vista Home Basic /Home Premium /Ultimate /Business /Enterprise, Windows Vista Home Basic/ Home Premium /Ultimate /Business /Enterprise x64 edition • Windows Server 2003, Windows Server 2003 x64
	PS3 printer driver	• Windows 2000 Professional (SP3 or later) • Windows XP Home Edition/Professional • Windows XP Professional x64, • Windows Vista Home Basic /Home Premium /Ultimate /Business /Enterprise, Windows Vista Home Basic/ Home Premium /Ultimate /Business /Enterprise x64 edition • Windows Server 2003, Windows Server 2003 x64
Driver	PostScript PPD driver	• Macintosh OS 9.2 or later • Macintosh OS X 10.2.8/10.3/10.4
Utility	PageScope Web Connection	
Compatible paper size	Max. standard paper size A3 Wide (Long size paper: Width 210 mm to 297 mm x Legth 457.3 mm to 1200 mm)	
Operating environmental requirements	10 to 30 °C (50 to 86 °F) 15 to 85 %	

Fonts	PCL	Latin 80 fonts
	PS	Latin 137 fonts

1.2 Supporting client specifications

PC	IBM PC and its compatible, Macintosh		
OS	Server	Windows NT4.0 SP6/2000 SP3/2003 Server/2003 Server 64 bit/XP 64 bit	
	Client	Windows NT4.0 SP6/2000 SP3/XP/XP 64 bit Macintosh OS 9.2 or later, OS X 10.2, 10.3, 10.4 Macintosh OS 10.4 Intel	
Interface	With a network connection	Connection method	Ethernet 10Base-T/100Base-TX/ 1000Base-T
		Protocols	TCP/IP, NetBEUI, IPX/SPX (NetWare 4.x, 5.x, 6.x)
	With a local connection	USB 2.0/1.1	
Browser	PageScope Web Connection Web browsers: Microsoft Internet Explorer 6 or later recommended (JavaScript enabled, Cookies enabled) Microsoft XML Parser MSXML3.X must be installed when using Internet Explorer 5.5. Netscape Navigator 7.02 or later (JavaScript enabled, Cookies enabled) Mozilla Firefox 1.0 or later (JavaScript enabled, Cookies enabled) Macromedia® Flash® (If “Flash” is selected in View Mode, version 7.0 or later plugin is required.)		

NOTE

- **These specifications are subject to change without notice.**

Maintenance

2. Checking the controller firmware version

- The controller firmware version can be checked in the jig software.

1. Call the Service Mode to the screen.
2. Touch [Firmware Version].
3. Check the firmware versions.

2.1 Outline

- There are two ways to update the firmware: One is by directly connecting with the main body using the compact flash, and the other is by downloading over a network using the Internet ISW.

2.2 Preparations for firmware rewriting by Windows Command Prompt

2.2.1 Service environment

- OS: Windows 2000/XP
- Drive which enables writing/reading of compact flash
- Compact flash (service tool)

2.2.2 Writing into the compact flash

1. Put the data of firmware in the optional directory. (C:\bizhub in the below figure)

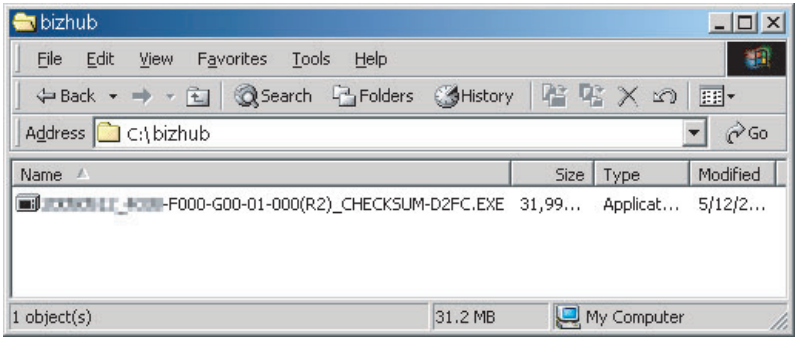

4038F2E562DB

NOTE

- **The file name of firmware data consists of the "Release Date_Version_CHECKSUM-****.exe."**

2. Double-click the firmware data, and specify the directory to be uncompressed, and then uncompress it.

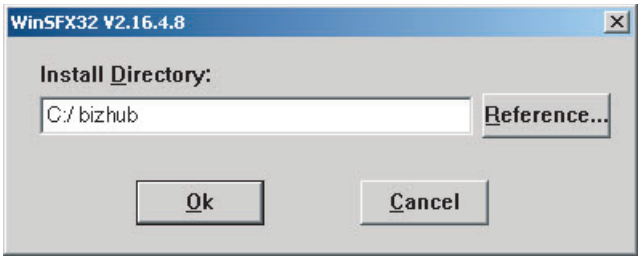

4038F2E563DB

NOTE

- **When old firmware is still left in the specified directory to be uncompressed, delete it before uncompressing.**
- **When the firmware data is decompressed, "card_work" folder is created in the selected directory and the data is decompressed in this folder.**

3. Mount the compact flash on the PC, and check the drive name, which was recognized in the Windows. (F-drive in the following figure)

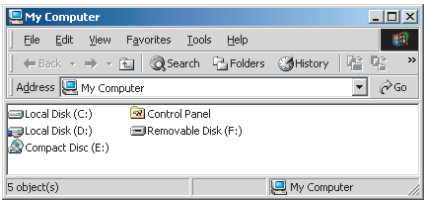

4036fs2623e0

4. Click [Start] → [Program] → [Accessories] → [Command Prompt] to open the command prompt.

5. Use the command prompt to move into the uncompressed directory.

6. Specify the drive of compact flash, which was recognized through the procedure 3, and execute the “mkcf.bat.” (Input the C: \bizhub\card_work>mkcf t1 f (drive number): in the below figure, and push the “Enter”.)

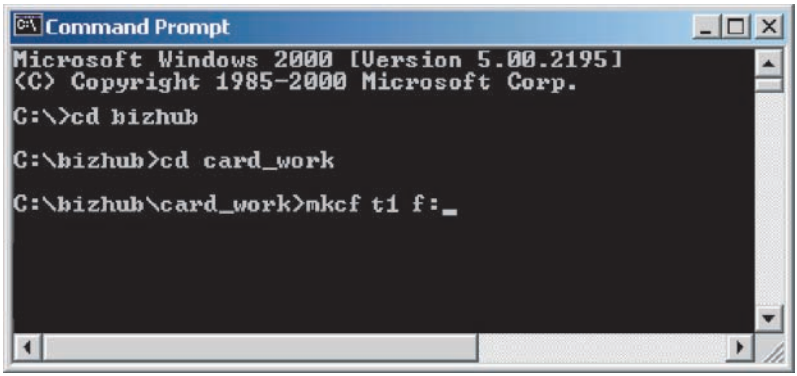

A02EF2E282DA

7. Once the “mkcf.bat” is executed, data writing into the compact flash is started.
8. Upon completion of writing, CHECKSUM is executed. If CHECKSUM value is precisely matched, “VERIFY OK” appears.

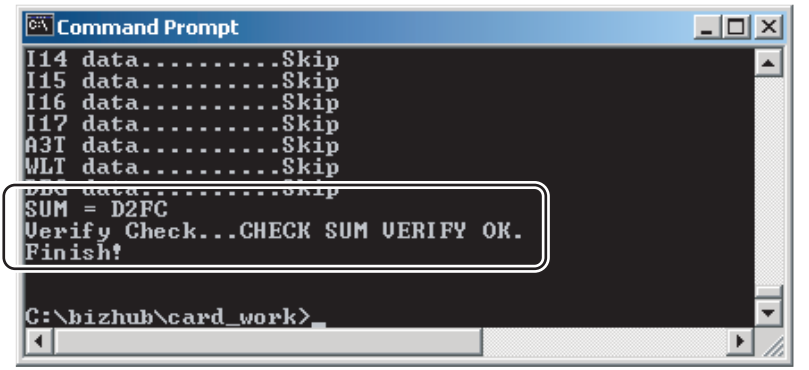

4038F2E565DB

9. Remove the compact flash from PC.

NOTE

- **When removing the compact flash, be sure to check if data is written as normal and then remove it according to the precise removing method.**

2.3 Preparations for firmware rewriting by Firmware Imaging Toolkit 2006

- This software is designed as the tool to write firmware data of MFP/printer released by KMBT into the compact flash card.

2.3.1 Correspond model

- Correspond models of the software is as follows.

Color machine	• bizhub C650/C550/C451/C450/C353/C352/C351/C350/C300/C253/C250/C203 • bizhub C450P/C353P/C352P/C250P
B/W machine	• bizhub 350/250/200 • Di3510/3510f/3010/3010f/2510/2510f

2.3.2 Function outline

- The following functions are available with this software.

Function type	Function name	Description
Basic functions	Write Firmware to a card	• Write firmware data into the compact flash card. See P.12
	Compare Firmware with a card	• Compare the firmware data written into the compact flash card with the one saved in PC. See P.12
Advanced functions	Create a Firmware Image from a card	• Create the firmware image form using the firmware data written into the compact flash card. See P.13
	Format a card	• Format the compact flash card by the FAT or vxWorks form. **NOTE** • **vxWorks form is not applicable** See P.13
	Display information about a card	• Acquisition the information of firmware data written into the compact flash card. See P.13

2.3.3 System environment

- The following system environments are required or recommended to use the software.

Computer	• IBM PC/AT compatible machine
CPU	• Pentium III / 500 MHz or higher is recommended.
Correspond OS	• Windows 2000, Windows XP or Windows Server 2003
Required memory	• More than 128 MB (Windows 2000), 256MB (Windows XP/2003) is recommended.
Others	• Drive that is able to Read/Write compact flash.

2.3.4 Installation of software

- Follow the procedures shown below to install the software.

NOTE

- **Install the software to the PC with the administration authentication.**
- **When any anti-virus program is activated, quite the program before the installation.**

1. Double click [setup.exe] to start the installation of the software.

9J06F2C673DA

2. Click [Next >].

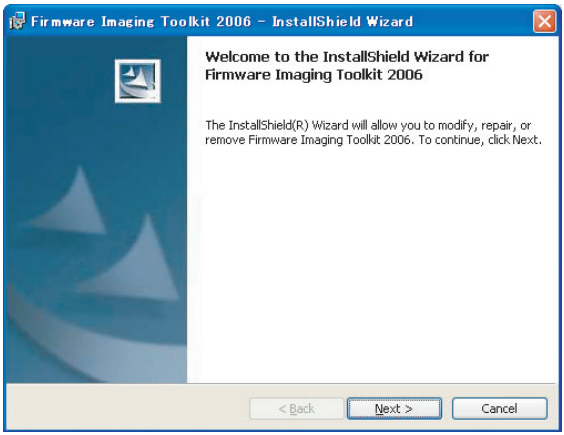

9J06F2E700DA

3. After checking the contents of license agreement, select [I accept the terms in the license agreement] and click [Next >].

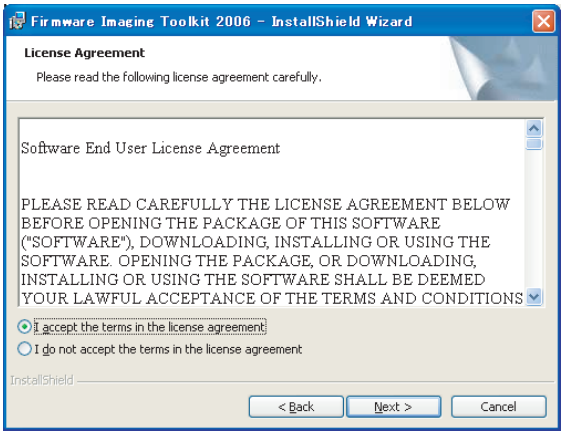

9J06F2E701DA

4. Select the installed destination folder of Firmware Imaging Toolkit 2006, and click [Next>].

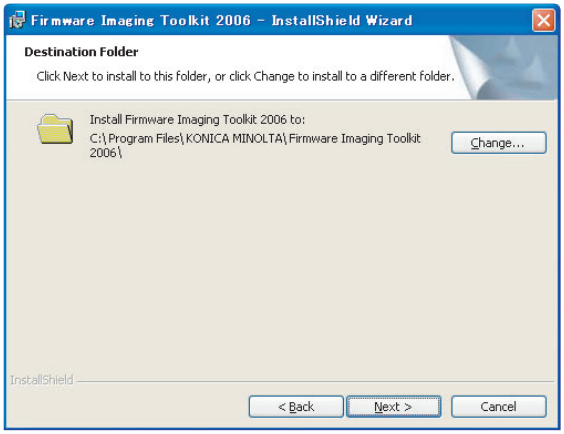

9J06F2E702DA

5. Click [Install] to start installation.
6. Click [Finish] to complete the installation.

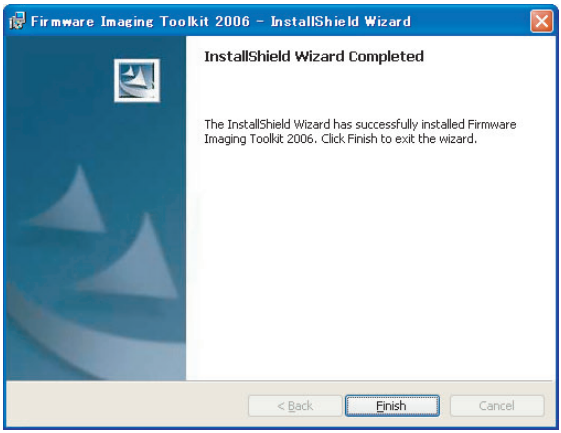

9J06F2E703DA

7. Shortcut file will be created inside Windows Start menu ([Program] → [KONICA MINOLTA] → [Firmware Imaging Toolkit 2006]).

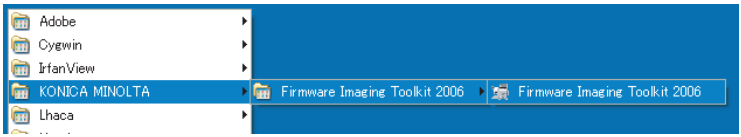

9J06F2E708DA

2.3.5 Update of software

- To update the software version, delete (uninstall) the currently installed program and install the new version.
- Follow the procedures shown below to delete (uninstall) the program.

1. Quite the program if the software is activated.
2. Select [Firmware Imaging Toolkit 2006] of [Add/Remove Programs] in Windows Control Panel menu to delete the program.

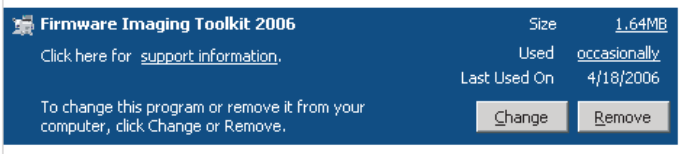

9J06F2E709DA

2.3.6 Screen

A. Main window

- The main window will be displayed after activating the software.
- Main window consists of 2 patterns: Basic mode, Advanced mode

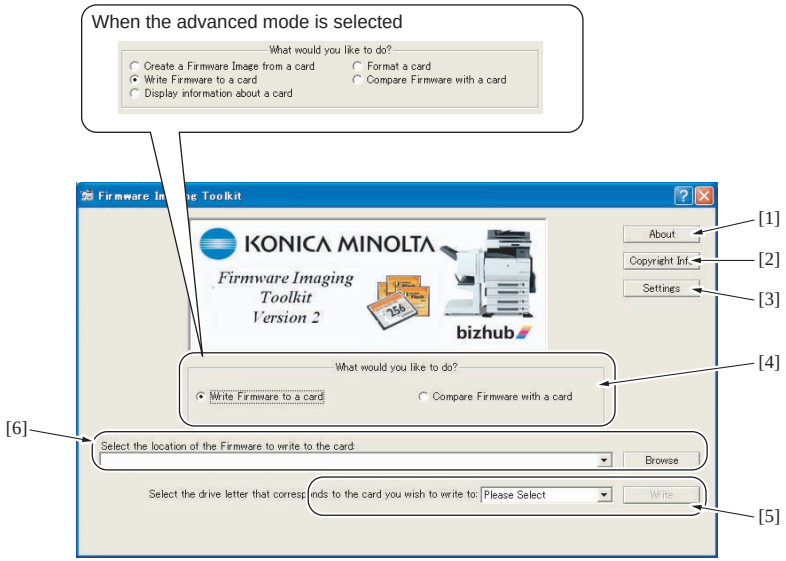

9J06F2E704DA

[1]	About	• To display the outline of the tool.
[2]	Copyright Info	• To display the license agreement and version information of the tool.
[3]	Settings	• To display the dialog to enable the advanced functions. • Select the check box of [Enabled Advanced Features] to enable advanced functions at main window. See P.11
[4]	What would you like to do?	• To select the function to be used. • Displayed screen is different between Basic mode and Advanced mode. See P.12
[5]	Select the location of the Firmware to write to the card:	• To select the compact flash drive to which the data to write.
[6]	Select the drive letter that corresponds to the card you wish to write to:	• To select the location where the firmware is stored in PC.

B. Settings dialog

- It will be displayed by clicking [Settings] at main window.
- Other settings will be enabled by selecting the check box of [Enabled Advanced Features].

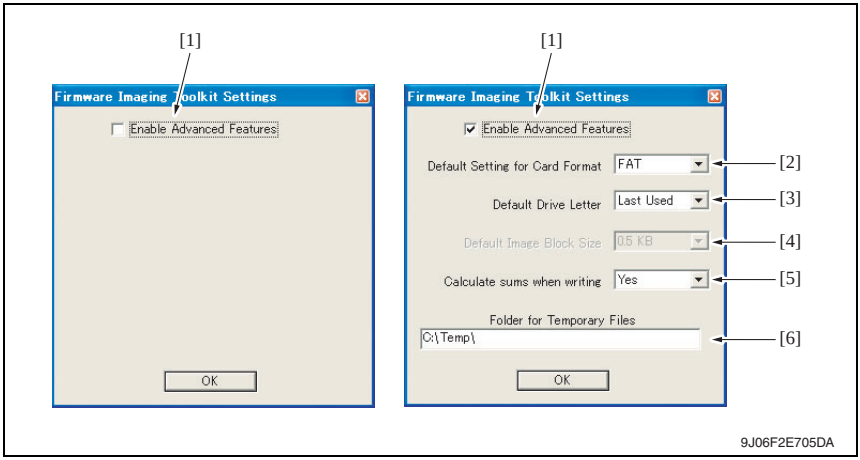

[1]	Enable Advanced Features	• Enable the setting of advanced functions at the dialog by selecting the check box. Also advanced functions can be selected at the main window.
[2]	Default Setting for Card Format	• Select the default card format during software starting. FAT : The format to be used by all models that the software supports. vxWorks : Not available yet.
[3]	Default Drive Letter	• Select how to set default of compact flash drive during software starting. LastUsed : The drive used at previous time is selected. None : [Please Select] is displayed on the screen every starting and the drive should be selected every time.
[4]	Default Image Block Size	• Not available yet.
[5]	Calculate sums when writing	• Set whether to calculate check sums during data writing. • If [YES] is selected, data consistency can be ensured by data verification of check sums during data writing. However, it takes more time for data writing compared to the case without sums calculation. (Basically this mode shall be selected.) • If [No] is selected, check sums calculation is skipped during data writing. Although it take less time for data writing compared to the case with sums calculation, it fails to ensure the reliability of the written data.
[6]	Folder for Temporary Files	• Set the folder for saving temporary files during the tool is activating. The temporary file is automatically deleted after the operation completes normally.

2.3.7 Details of each function

A. Basic functions

(1) Write Firmware to a card

- To write FW data into the compact flash. The FW data of the models shown below can be written.
- To write FW data into the compact flash. The FW data of the models shown below can be written.

<Corresponding models and firmware file type>

File type / Models	Indexed firmware type	Compressed firmware type	Uncompressed firmware type	Di3510/350/250/ 200 firmware type
C650	Mosel1_cf.tar.gz	*.img.gz	*.img	—
C550	Mosel2_cf.tar.gz			—
C451	Mosel3_cf.tar.gz			—
C353/C353P	thames1_cf.tar.gz			—
C253	thames2_cf.tar.gz			—
C203	thames25_cf.tar.gz			—
C450/C450P/C351	rhein1_cf.tar.gz			—
C352/C352P/C300	rhein2_cf.tar.gz			—
C350	tss2_cf.tar.gz			—
C250/C250P	rhein3_cf.tar.gz			—
Di3510/3510f/3010/ 3010f/2510/2510f	—	—	—	ma001
350/250/200	—	—	—	ma001a

NOTE

- **The above-mentioned [Indexed firmware type] and [Di3510/350/250/200 firmware type] shall be comprised of multiple files and one of the files shall be named as above.**
- **[Compressed firmware type] means the compressed formed image file that is created using the tool's function of the [Create a Firmware Image from a card].**
- **[Uncompressed firmware type] means the image file that is uncompressed the compressed firmware file.**
- **To write the image file data (*.img.gz or *.img) into the compact flash, use the compact flash with the same capacity as the one used for the original image file. Although the compact flash with larger capacity than the original one can be used, it is not covered under warranty.**
- **C350 firmware requires the compact flash over 64 MB.**
- **Firmware of C650/C550/C451/C450/C450P/C353/C353P/C352/C352P/C351/C300/ C253/C250/C250P/C203 requires the compact flash over 128 MB.**

(2) Compare Firmware with a card

- Compare the firmware data written into the compact flash and the one (file) saved in PC.
- After the comparison, display the check sum information (comparison result dialog) of the firmware data of the compact flush and the file.
- The firmware data (file) format saved in PC shall consistent with the one written into the compact flash.

B. Advanced functions

(1) Create a Firmware Image from a card

- Create the image file from the firmware data written into the compact flash.
  Create the image file by dumping directly the data in the card. This function allows us to save the various type of firmware data in the compact flash as the image file and hold as print data.
- The created FW image file is automatically compressed and created as the Compressed firmware file (*.img.gz).
  The image file is written into the compact flash in the uncompressed form, however, the uncompressed data would occupy too much capacity, which makes file control difficult. Therefore this tool doesn't create uncompressed firmware file (*.img).

(2) Format a card

- Make format of the compact flash in FAT or vxWork form.
- To write the firmware data into the compact flash, the card should be formatted in FAT form to clear (initialize) the description of the compact flash.

NOTE

- **In current version, only FAT format is available but not vxWork format.**
- **After the firmware data is written into the compact flash, it becomes the own file style that is different from the FAT, and the compact flash that the firmware data is written cannot be browsed on the Windows OS.**

(3) Display information about a card

- Display the information of the firmware data written into the compact flash.
  The information to be displayed is according to the type of written FW data.
- For the series of Di3510/200/250/350 series, MSC version is displayed.
- For the series of C650/C550/C451/C450/C450P/C353/C353P/C352/C352P/C351/C350/C300/C253/C250/C250P/C203, check sums of each firmware data is displayed.

2.3.8 How to write firmware data

A. In the case of C650/C550/C451/C450/C450P/C353/C353P/C352/C352P/C351/C350/C300/C253/C250/C250P/C203 series

1. Put the firmware data in the optional directory. (C:\bizhub in the below figure)

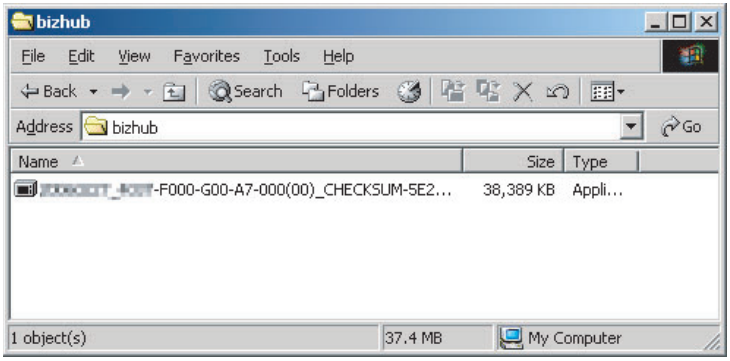

9J06F2E710DA

NOTE

- **The file name of firmware data consists of the "Release Date_Version_CHECKSUM-****.exe."**

2. Double-click the firmware data, and specify the directory to be uncompressed, and then uncompress it.

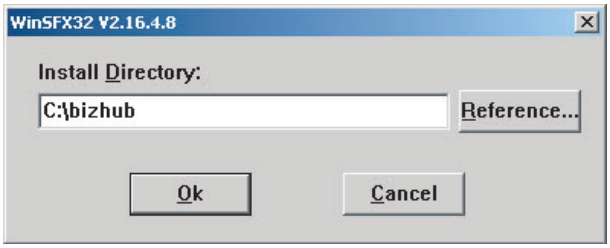

9J06F2E711DA

NOTE

- **When old firmware is still left in the specified directory to be uncompressed, delete it before uncompressing.**

3. Mount the compact flash on the PC, and check the drive name, which was recognized in the Windows. (F-drive in the following figure)

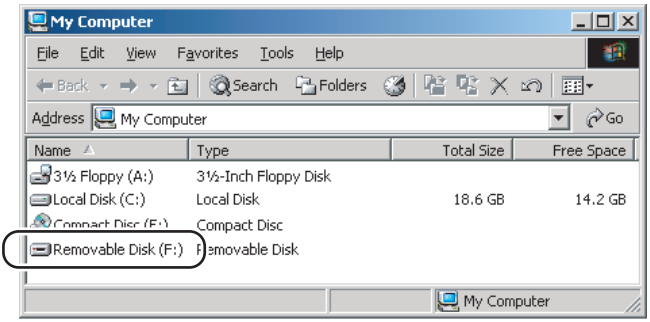

9J06F2E712DA

4. Start Firmware Imaging Toolkit 2006.

NOTE

- **When using the external compact flash drive such as USB be sure to connect them before starting this tool.**

5. Select the check box of [Write Firmware to a card].

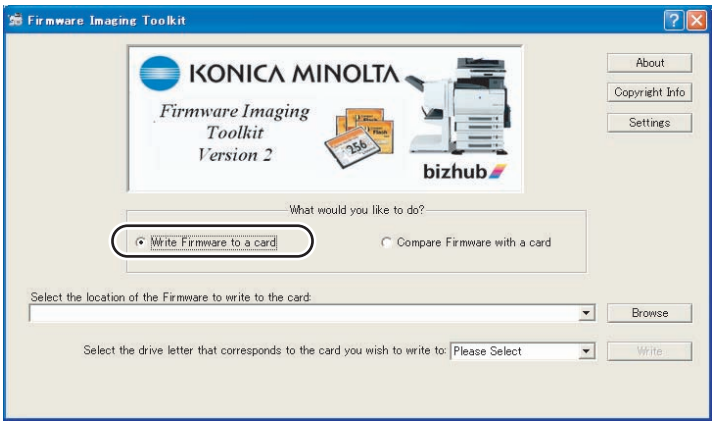

9J06F2E706DA

6. Click [Browse].

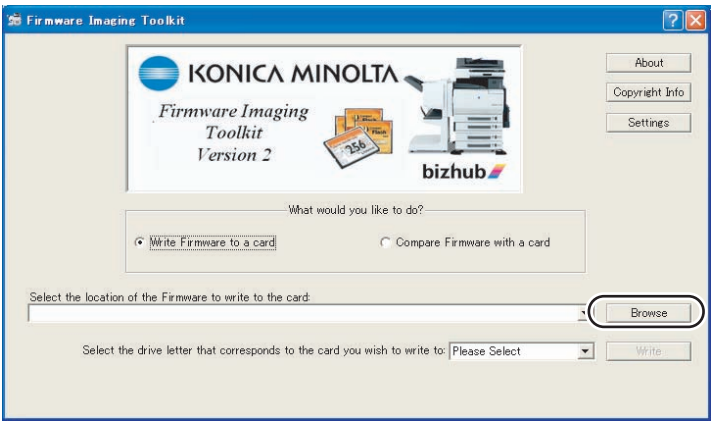

9J06F2E707DA

7. Select the file type [Indexed Firmware].

8. Move to the folder decompressed at step 2, confirm that only "###_cf.tar.gz" (### is for model name) is displayed, and select.

NOTE

- **If the file extension is set to be not displayed in Windows, the file name ".gz" will not be displayed.**

9. Click [Open].

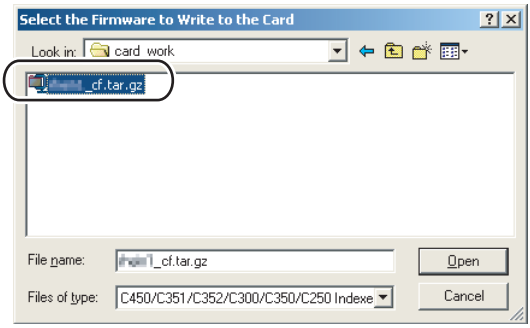

9J06F2E714DA

10. Select the drive that the compact flash is inserted, which is confirmed at step 3.

NOTE

- **The drives other than the compact flash that is recognized as "Removable Disk" can be selected for the writing destination. If these drives are selected mistakenly to make the writing, it may give fatal damage on Windows system or delete the saved data. Therefore pay close attention when selecting the drive.**

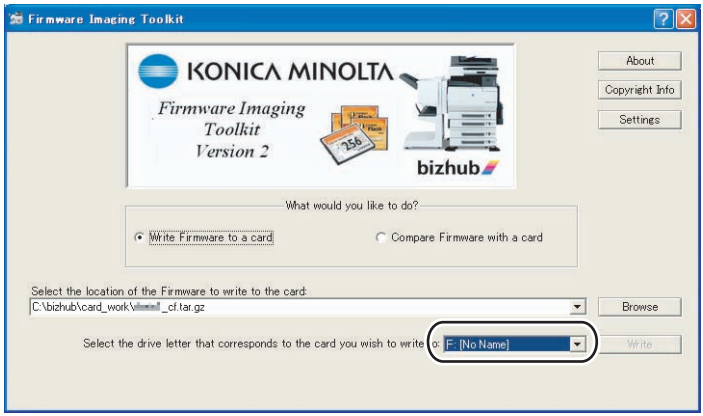

9J06F2E715DA

11. [Write] button is changed form gray into active status.
When clicking [Write] button, the following dialog is displayed.

12. In the dialog, re-confirm the firmware data and the written destination drive, and click [YES].
(If [NO] is clicked, the screen goes back of the main window.)

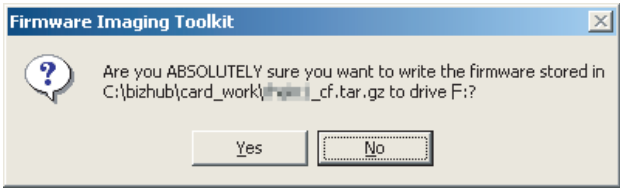

9J06F2E716DA

13. Click [Yes], and data writing starts.

NOTE

- **Writing a card is a resource intensive operation for your computer - do not attempt to multitask (use the computer for anything else) during the writing procedure.**

14. When the writing is completed, the following screen appears.
In this screen, check sums will be compared between the firmware data and one written into the compact flash.

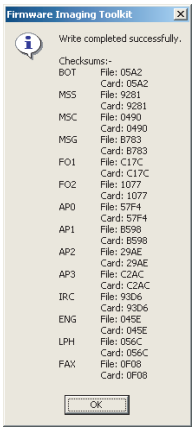

9J06F2E717DA

NOTE

- **The contents displayed on the screen may different according to the model type. The above is the screen displayed for firmware data writing of bizhub C450.**

15. Confirm each check sums are identical and quit Firmware Imaging Toolkit 2006.
16. Take out the compact flash from the PC.

NOTE

- **When removing the compact flash, be sure to check if data is written as normal and then remove it according to the precise removing method.**

2.4 Firmware rewriting by compact flash

- The firmware is updated using the compact flash.

2.4.1 Updating method

NOTE

- **NEVER remove or insert the compact flash card with the machine power turned ON.**

1. Turn OFF the power switch.
2. Open the rear right door.

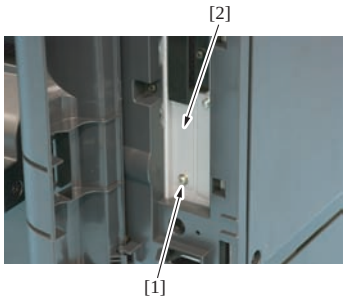

3. Remove the screw [1] and the metal blanking plate [2].

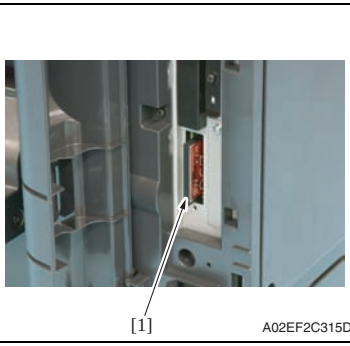

4. Insert the compact flash card [1] into the slot.

5. Turn ON the power switch.

6. Check the message and press the Menu/Select key to start the firmware rewrite.

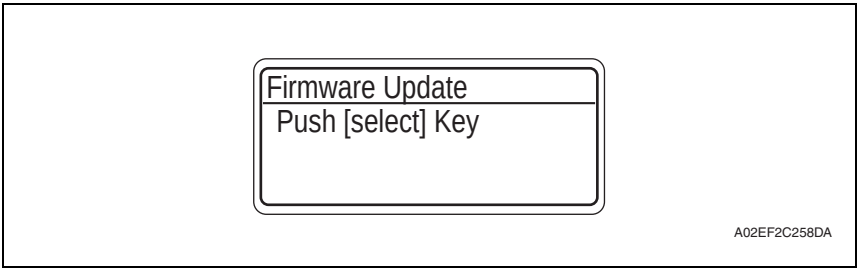

7. While the firmware rewrite is in process, the following message appears and LED line blinks in blue.

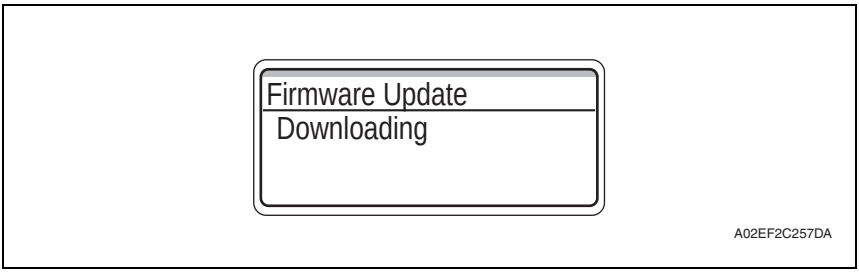

8. On the control panel, check the message, Download Completed, which tells the firmware update has been completed successfully. (LED line lights up in blue.)
9. Turn OFF the power switch.
10. Remove the compact flash from the slot.
11. Turn ON the power switch.

NOTE

- **When turning ON the power switch for the first time after completing the firmware update, do not turn OFF the power switch until "Ready to Print" message or the message that prompts you to enter a serial number appears.**
- **When the message that prompts you to enter a serial number appears after turning ON the power switch, enter the serial number from [Service Mode] → [System Settings] → [Enter Serial No.].**
- **If trouble code D3## appears after turning ON the power switch, irregularity in non-volatile data needs to be addressed.**

2.4.2 Action when data transfer fails

- If “Failed to Download” appears on the control panel, indicating that rewriting has been unsuccessful (in which case the Start key lights up red), take the following steps.

1. Perform the data rewriting procedure again.
2. If the procedure is abnormally terminated, change the compact flash for a new one and try another rewriting sequence.
3. If the procedure is still abnormally terminated, change the board and carry out data rewriting procedure.

MFP CONTROLLER	MFP board (MFPB)
PRINTER	Printer control board (PRCB)
FINISHER	FS control board (FSCB) *1

⚠ *1: The optional finisher FS-519 or FS-609 is necessary for the above procedure.

2.5 Updating the firmware with the Internet ISW

2.5.1 Outline

- [Internet ISW] is the system where the firmware update instructions are sent to the main body via either the control panel or the jig software so that the main body will automatically receive the latest firmware data from the program server over a network. Using Internet ISW allows updating the firmware while CE is visiting a customer site without bringing the latest firmware data.

2.5.2 Service environment

The following conditions are necessary for using the Internet ISW function.

- The main body is connected to such a network environment that the firmware can be downloaded on the internet using the ftp or http protocol.

The “Internet ISW” will not operate under the following conditions.

- Power switch is set to OFF.
- When the following setting is set to “ON”:
  [Admin. Settings] → [Security Settings] → [EnhancedSecurity]
- The main body has the job currently performing.

2.5.3 Preparations for firmware rewriting

- For using the Internet ISW, the network parameter, program server address as well as firewall address need to be set to the main body.
- For details of each setting item, refer to Adjustment/Setting “Internet ISW”.
  See P.377

A. Internet ISW Set

1. Start the jig software on the PC that has the software installed.

NOTE

- **Step 1 is necessary only for the setup from the jig software. Perform step 2 and later regardless of whether the jig software or the control panel is used.**

2. Call the Service Mode to the screen.

3. Select [Internet ISW Set] which is available from [Internet ISW].

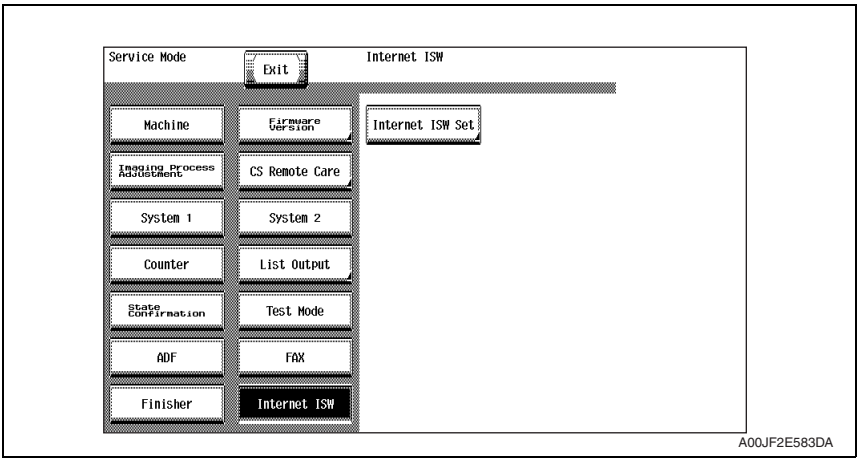

4. Click [ON], and click [END].
When using the control panel, select [Enable] and press the Menu/Select key.

NOTE
- **Settings such as server setting, etc. will be available by selecting "ON" on this setting.**
- **When the following setting is set to "ON", "ON" cannot be selected on this setting. [Admin. Settings] → [Security Settings] → [EnhancedSecurity]**

B. Protocol setting
- **It performs the setting concerning the protocol (ftp or http) for connecting to the Internet ISW.**
- **When connecting to the program server using a proxy server, perform the setting for a proxy server.**

Step	Connecting by http	Connecting by ftp
0	Select [Internet ISW] which is available from [Service Mode].	
1	Data Input Setting • Click [HTTP Setting], and select [ON]. Data acquisition setting (Control panel) • Select [HTTP Settings] → [DataRetrievalSet] → [Enable].	Data Input Setting • Click [FTP Setting], and select [ON]. Data acquisition setting (Control panel) • Select [FTP Settings] → [DataRetrievalSet] → [Enable].
2	Connect Proxy • For connecting via proxy server, select [ON].	
3	Proxy Server • For connecting via proxy server, set the proxy server address and the port number. *1.* Select the [Server Address], and set the proxy server address by IP addressing scheme or FQDN scheme. *2.* Select [Port Number], and set the port number for the proxy server from 1 through 65535.	
4	Proxy Authentication • Set the login name and the password which may be necessary for authentication when accessing to the proxy server. *1.* When Authentication is necessary for accessing to the proxy server, select [Authentication], and select [ON]. When using the control panel, select [Auth. Settings], and select [ON]. *2.* When using the jig software, select [Log-in Name] and enter the login name with the keyboard on the screen. When using the control panel, enter the auth. login name with the operation keys. *3.* When using the jig software, select [Password] and enter the password with the keyboard on the screen. When using the control panel, enter the auth. password with the operation keys.	Connection Setting • Perform the setting for accessing FTP server. *1.* Select [Port Number], and set the port number for FTP server from 1 through 65535. *2.* Select [Connection Time Out], and set the time for the connection time out from 1 through 60. When using the control panel, select [Time-out], and set the time for the connection time out from 1 through 60. *3.* When connecting in PASV mode, select [PASV Mode], and select [ON]. When using the control panel, select [PASV Mode], and select [Enable]. *PASV Mode: This mode is for transferring the file with FTP under the condition where communication is restricted such as inside the firewall. Since with PASV mode, the client with restriction sets the port number, data transmission port can be secured to enable the file transmission.

Step	Connecting by http	Connecting by ftp
5	Connection Time-Out • Select [Connection Time-out], and set the time for the connection time out between 30 and 300 seconds. ConnectionTimeout (Control panel) • Select [ConnectionTimeout], and set the time for the connection time out between 30 and 300 seconds.	—

C. Forwarding access setting

- To make the access setting for the program server which stores the firmware data.

1. Select [Internet ISW] which is available from [Service Mode].
2. Click [Forwarding Access Setting].
   * When using the control panel, select [ForwardAccessSet].

NOTE

- **The following setting screen appears when using the jig software. When using the control panel, a different setting screen appears.**

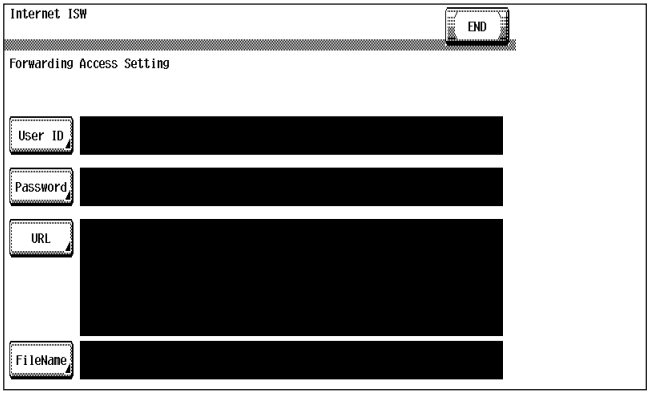

A00JF2E584DA

3. Select [User ID], and enter the user ID which is necessary for connecting to the program server on the on-screen keyboard, and click [END].
   * When using the control pane l, select [User ID], enter the user ID that is used for the connection to the program server with the operation keys, and press the Menu/Select key.
4. Select [Password], and enter the password which is necessary for connecting to the program server on the on-screen keyboard, and click [END].
   * When using the control panel, select [Password], enter the password that is used for the connection to the program server with the operation keys, and press the Menu/Select key.
5. Select [URL], and enter the directory which stores the program server address and the firmware on the on-screen keyboard by URL method, and click [END].
   * When using the control panel, select [URL], enter the URL of the directory that stores the program server address and firmware data with the operation keys, and press the Menu/Select key.

NOTE

- **Enter the URL which matches to the protocol to be used.**
  When connecting to http http://(host name or IP address)/directory name
  or https://(host name or IP address)/directory name
  When connecting to ftp ftp://(host name or IP address)/directory name

6. Select [FileName], and enter the file name of the firmware data to be downloaded on the on-screen keyboard, and click [END].
  * When using the control panel, select [File Name], enter the file name of the firmware data to be downloaded with the operation keys, and press the Menu/Select key.

7. Click [END] to finish setting.

2.5.4 Firmware rewriting

NOTE

- **When performing the Internet ISW, ask the administrator for permission beforehand.**
- **DO NOT turn OFF the power switch while downloading.**

A. Conducting rewriting on the control panel

1. Perform the following setting.
   [Service Mode] → [Internet ISW] → [Download]
2. Click [ISW Start].

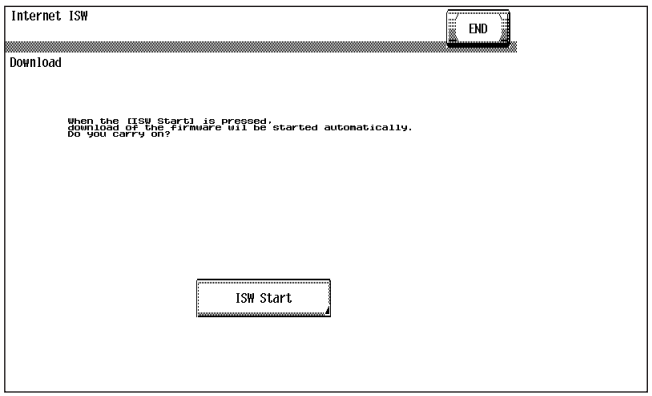

A00JF2E585DA

3. The main body will automatically start running, and it starts accessing the server.
4. Select the Firmware to be updated, and start downloading.

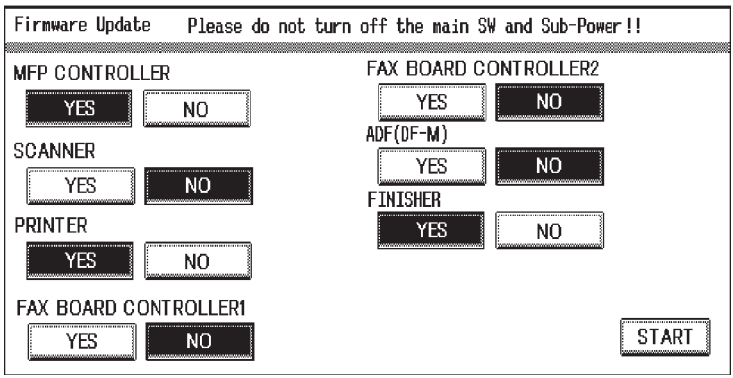

A02EF2C271DA

5. The message to indicate the status will be displayed on the screen while connecting or transferring data.
6. While the machine is connected to the server and data is downloaded, a status message appears on the control panel.

B. Update from the control panel

1. Select [Service Mode] → [Internet ISW] → [Download].
2. Select [Start] and press the Menu/Select key.
3. The message, [Rebooting. Please do not turn OFF power.], appears.
4. The machine starts rebooting itself. The control panel displays [Now initializing Please wait] to determine the machine configuration.
5. When connection is made, the control panel displays [Now Connecting to the Firmware Server].
6. While the machine is connected to the server, the message is displayed as shown in the following illustration.

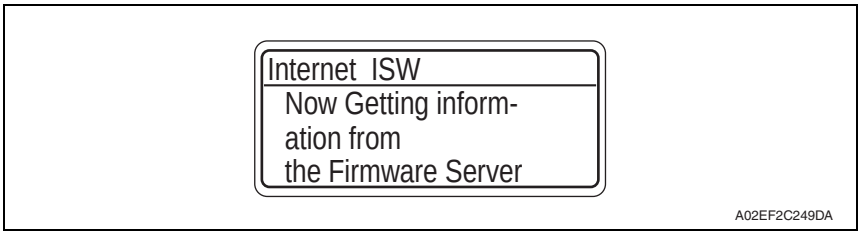

7. When the program starts running, the control panel displays [Now Downloading Program Data from the Firmware Server] and the download is started.
8. When the program download is successfully complete, the control panel displays [Push [select] Key.]
9. Press the Menu/Select key on the control panel to start downloading the firmware data.
10. While downloading the firmware data, the control panel displays [Downloading.]

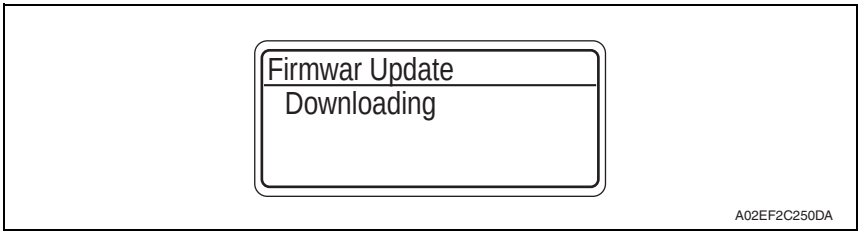

11. When the firmware download is complete, the control panel displays the message as shown in the following illustration.

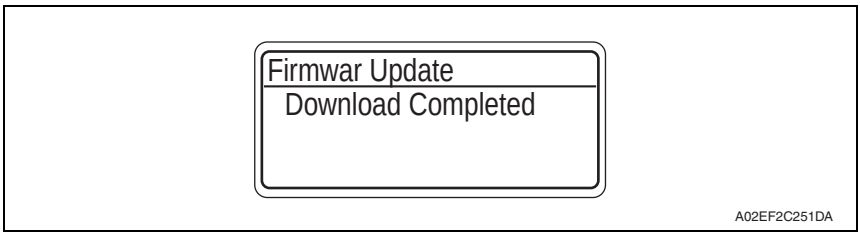

12. When Internet ISW is complete successfully, the control panel displays the message as shown in the following illustration.

A02EF2C281DA

C. Completed or failed

(1) Firmware updated normally

1. When the Firmware is normally updated, restart the main body in auto or manual mode to display the outcome, and press the Menu/Select key to return to the main screen.

(2) Failing to update the firmware due to the network trouble

1. When updating failed to complete due to the trouble on connecting to the network, an error code and the message will be displayed.
2. Restart the main body in auto or manual mode, and press the Menu/Select key. It can be used with the firmware version before conducting updating.
3. Check the settings for the network by error codes, and try updating again.

NOTE

- **For error codes, refer to "Error code list for the Internet ISW".**
  See P.29

(3) Failing to update the firmware after downloading has started

1. Once firmware updating has started, the ROM in the main body will be deleted. When it failed right after updating has started, restart the main body, and shift to the standby screen to retry downloading.
2. When updating on the external panel controller, click [settings] on the standby screen, and check the Network settings again.
   Click [Download], and restart the Internet ISW.
   When updating on the control panel, press the Menu/Select key on the standby screen, and try reconnecting to the server.

NOTE

- **Return to the standby screen without fail after turning the power switch OFF/ON if the firmware is not updated.**
- **Firmware can be updated with the Compact flash with the power switch OFF.**

D. Confirming the firmware version

1. Use the PC that has the jig software installed and enter the Service Mode.
2. Select the [Firmware Version].
3. Check if the firmware version is updated.

2.5.5 Error code list for the Internet ISW

- When a trouble occurred while conducting the Internet ISW and it was not normally connected, the message on the status and the error code will be displayed on the control panel.
  When updating with CS Remote Care, the error code will be sent to the CS Remote Care center.

<Sample display>

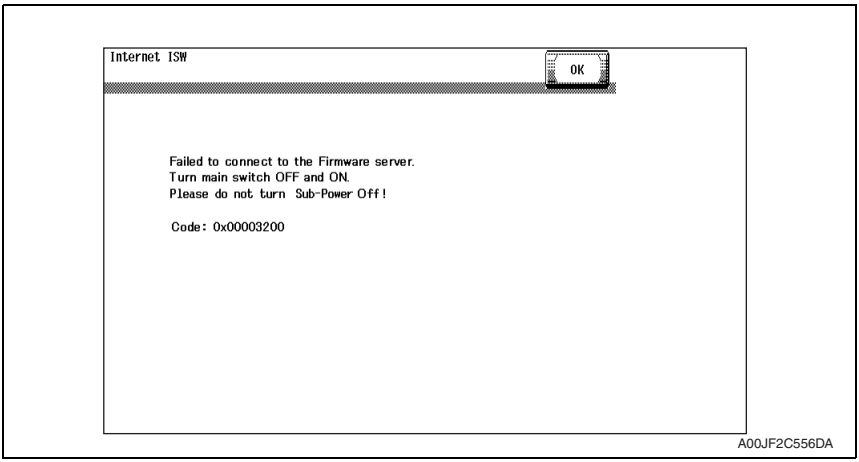

Error code Control panel	Description	Countermeasure
0x00000001	Illegal error on the control	• Check if the following setting is set to “ON”. When using the control panel, check if the following setting is set to “Enable”. [Service Mode] → [Internet ISW] → [Internet ISW Set] • Check the status of the following setting. [Service Mode] → [Internet ISW] → [Forwarding Access Setting] When using the control panel, [Service Mode] → [Internet ISW] → [Forward Access Set] • If the above process does not solve the problem, inform the corresponding error code to the KONICA MINOLTA.
0x00000010	Parameter error	• Check if the following setting is set to “ON”. When using the control panel, check if the following setting is set to “Enable”. [Service Mode] → [Internet ISW] → [Internet ISW Set] • If the above process does not solve the problem, inform the corresponding error code to KONICA MINOLTA.

Error code Control panel	Description	Countermeasure
0x00111000	Error concerning the network • Connection has been completed.	• Check the User's network environment. (LAN cable's connection) • Check the status of the following setting. [Service Mode] → [Internet ISW] → [Forwarding Access Setting] When using the control panel, [Service Mode] → [Internet ISW] → [Forward Access Set] • Check to see if the FTP server operates normally.
0x00111001	Error concerning the network • It cannot be connected to the server.	• Check the network environment of the User. • Check to see if the FTP server operates normally.
0x00111100	Error concerning the network • Communication timeout.	
0x00111101	Error concerning the network • Disconnection occurred	• Check the network environment of the User. • Check to see if the FTP server operates normally.
0x00111110	Error concerning the network • The network is not connected.	
0x00110010	Error concerning the network • Others	
0x00001###	FTP error • Reply code when it failed to be connected	• Check to see if FTP server normally operates. • Check the IP address, user's name, etc.
0x00002###	FTP error • Error reply code for the user command or pass command	• Check to see if FTP server operates normally.
0x00003###	FTP error • Error reply code for CWD command	
0x00004###	FTP error • Error reply code for the TYPE command.	• Check to see if FTP server operates normally.
0x00005###	FTP error • Error reply code for the PORT command.	
0x00006###	FTP error • Error reply code for the PASV command.	• Check to see if FTP server operates normally. • Set the PASV mode to "OFF", and try it again. When using the control panel, set the PASV mode to "Disable", and try it again.
0x00007###	FTP error • Error rely code for the RETR command.	• Check to see if FTP server operates normally. • Wait for about 30 minutes and try it again.
0x1000 0100	• It cannot be accepted because of the job currently being executed. • ISW being executed by other method.	• Wait for the current job to be completed and try it again.

Error code Control panel	Description	Countermeasure
0x10000102	• The Internet ISW is already being executed.	• Wait for the current Internet ISW to be completed.
0x10000103	• It failed to prohibit the job. (It failed to lock the operation.) → It failed to lock the job because the operation is already locked with PSWC, etc.	• Check if the following setting is set to "ON". When using the control panel, check if the following setting is set to "Enable". [Service Mode] → [Internet ISW] → [Internet ISW Set] • If the above process does not solve the problem, inform the corresponding error code to the KONICA MINOLTA.
0x10000104	• There is no space for F/W data to be downloaded.	
0x10000106	• Check sum error	
0x10000107	File access error • The file downloaded has an error. • The header of the file which has been read has an error. • The size of the file to be downloaded is too large. • When it is identified to be the different type of F/W.	• Check to see if the downloaded F/W is of the correct type.
0x10000108	• The area F/W is stored is destroyed, and another ISW is necessary.	• Wait until ISW is automatically executed on printer side.
0x20000000	The temporary error when running the subset • When starting the Internet ISW in a normal program, the rebooting will start and the Internet ISW will be executed with the subset program. During the process by the subset program, it has to be in the "Failed" status unless the Internet ISW is successfully conducted. This code is used temporarily to make it in error status.	

Blank Page

Troubleshooting

3. Checking the system configuration

- When a malfunction occurs, let the printer print a configuration page to check for system configuration.

1. Press the Menu/Select key.
2. Select [User Settings] → [Print Reports] → [Configuration].
3. Select 1-Sided Print or 2-Sided Print and press the menu/select key to produce an output of the list.

4. Status codes

Code	Description	Action
CA051	Standard controller configuration failure	Change the MFP board (MFPB).
CA052	Faulty controller hardware	Change the MFP board (MFPB).
CA053	Controller start failure	Change the MFP board (MFPB) if the problem occurs again when turning OFF the power switch and turn it ON again more than 10 seconds after.

See P.413 of the main body service manual.

5. Troubleshooting procedures

5.1 Unable to print over the network.

	Check		Possible Cause	Action	Remark
1	Is the print job displayed on the machine control panel?	Yes	An error on machine side (paper running out, toner running out, etc.)	Correct the error.	See “User’s Guide” of the machine.
			Waiting its turn	Check the machine control panel for jobs in print queue. Priority may be changed as necessary.	
			The job is locked.	Enter the password to unlock the job.	
			The correct division ID has not been entered.	Enter the correct division ID in the printer driver and try re-transmitting the job again. (access code)	
		No	Data is yet to be received.	Go to item 2.	

	Check		Possible Cause	Action	Remark
2	Is the response of Ping sent from the PC to the machine?	Yes	The print destination port setting is wrong.	Set the correct port.	See “User’s Guide”
			PC operates erratically temporarily.	Restart the PC.	
			Printer driver incorrectly installed	Uninstall the printer driver through the proper steps and then reinstall it properly.	See “User’s Guide.”
		No	Controller board (MFP Control Board) operates erratically temporarily.	Restart the controller board.	Turn OFF the Power Switch and turn it ON again more than 10 seconds after.
			Network cable is disconnected or a relay device is faulty.	Reconnect the cable and restart or change the faulty relay device.	Check with the controller network LED.
			IP address and/or subnet mask incorrectly set.	Set the correct IP address and subnet mask.	See “TCP/IP Setting” in Installation Guide.

KONICA MINOLTA

SERVICE MANUAL

FIELD SERVICE

PC-104/204

Revision history

After publication of this service manual, the parts and mechanism may be subject to change for improvement of their performance.
Therefore, the descriptions given in this service manual may not coincide with the actual machine.

When any change has been made to the descriptions in the service manual, a revised version will be issued with a revision mark added as required.

Revision mark:

- To indicate clearly a section revised, show to the left of the revised section.
  A number within represents the number of times the revision has been made.

- To indicate clearly a section revised, show in the lower outside section of the corresponding page.
  A number within represents the number of times the revision has been made.

NOTE

Revision marks shown in a page are restricted only to the latest ones with the old ones deleted.

- When a page revised in Ver. 2.0 has been changed in Ver. 3.0:
  The revision marks for Ver. 3.0 only are shown with those for Ver. 2.0 deleted.
- When a page revised in Ver. 2.0 has not been changed in Ver. 3.0:
  The revision marks for Ver. 2.0 are left as they are.

Date	Service manual Ver.	Revision mark	Descriptions of revision
2007/10	1.0	—	Issue of the first edition

CONTENTS

PC-104/204

General

1. Product specifications 1
2. Paper Feed path 2

Maintenance

3. Periodical check 3
3.1 Maintenance procedure (Periodical check parts) 3
3.1.1 Replacing the separation roller assy 3
3.1.2 Replacing the feed roller 5
3.1.3 Replacing the pick-up roller 8
4. Other 11
4.1 Disassembly/Adjustment prohibited items 11
4.2 Disassembly/Assembly/Cleaning list (Other parts) 12
4.2.1 Disassembly/Assembly parts list 12
4.2.2 Cleaning parts list 12
4.3 Disassembly/Assembly procedure 13
4.3.1 Right door/Rear right cover/Lower right cover/Front right cover 13
4.3.2 Rear cover/Left cover 13
4.4 Cleaning procedure 14
4.4.1 Separation roller 14
4.4.2 Feed roller 15
4.4.3 Pick-up roller 15
4.4.4 Vertical transport roller 16

Adjustment/Setting

5. How to use the adjustment section 17
6. Sensor check 18
6.1 Check procedure 18
6.1.1 Sensor check screen 18
6.1.2 Sensor check list 19
7. Mechanical adjustment 20
7.1 Adjusting the paper reference position 20
7.1.1 Centering 20
7.1.2 Centering (Duplex) 23

Troubleshooting

8. Jam display 25
8.1 Misfeed display 25
8.1.1 Misfeed display resetting procedure 25
8.2 Sensor layout 26
8.3 Solution 27
8.3.1 Initial check items 27
8.3.2 Tray3 feed section/vertical transport section misfeed (PC-104/204) 28
8.3.3 Tray4 feed section/vertical transport section misfeed (PC-204) 29
9. Trouble code 30
9.1 Trouble code display 30
9.2 Trouble code list 30
9.3 Solution 31
9.3.1 C0206: Tray3 lift-up failure
C0208: Tray4 lift-up failure 31

General

1. Product specifications

A. Type

Name	2 way paper feed cabinet
Type	Front loading type 2 way paper feed device
Installation	Desk type
Document alignment	Center

B. Paper

Type	Size	Capacity	
		Tray 3	Tray 4
Plain paper (60 to 90 g/m² (16 to 24 lb))	A5S to A3, 5-1/2 x 8-1/2S to 11 x 17	500 sheets	500 sheets
Thick paper 1 (91 to 150 g/m² (24.25 to 40 lb))		150 sheets	150 sheets
Thick paper 2 (151 to 209 g/m² (40 to 55.5 lb))			
Thick paper 3 (210 to 256 g/m² (55.75 to 68 lb))			

C. Machine specifications

Power requirements	DC 24 V ± 10 % (supplied from the main body)
	DC 5 V ± 5 %
Max. power consumption	15 W or less
Dimensions	600 mm (W) x 578 mm (D) x 301 mm (H) 23.5 inch (W) x 22.75 inch (D) x 11.75 inch (H)
Weight	PC-104: 24.0 kg (53 lb) PC-204: 28.0 kg (61.75 lb)

D. Operating environment

Conforms to the operating environment of the main body.

NOTE

- **These specifications are subject to change without notice.**

2. Paper Feed path

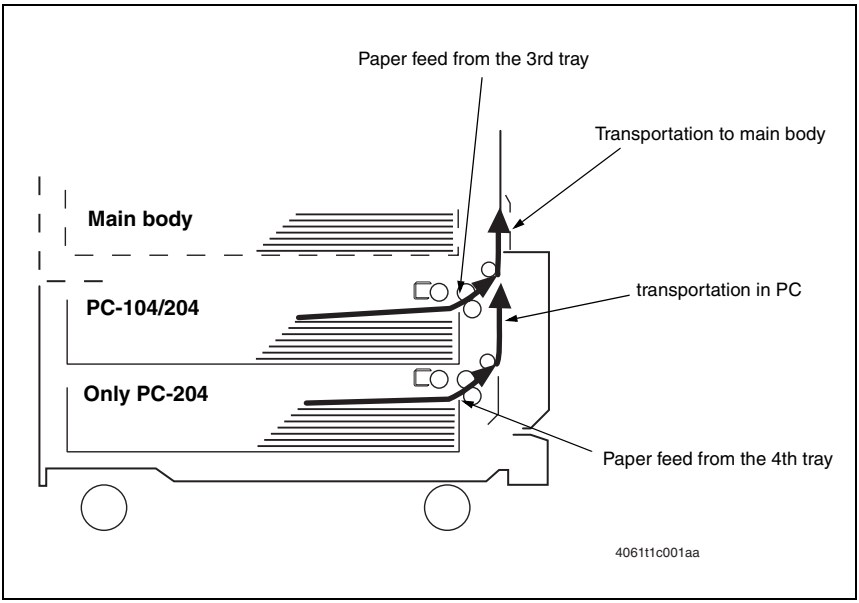

Maintenance

3. Periodical check

3.1 Maintenance procedure (Periodical check parts)

3.1.1 Replacing the separation roller assy

A. Periodically replaced parts/cycle

- Separation roller assy: Every 300,000 prints

NOTE

- **Replace the separation roller assy, feed roller and pick-up roller at the same time.**

B. Replacing procedure

1. Remove the right door.
See P.13

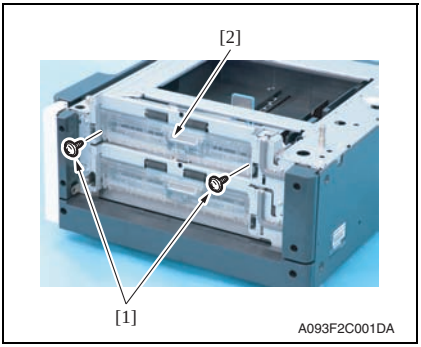

2. Remove two screws [1] and remove the jam access cover [2].

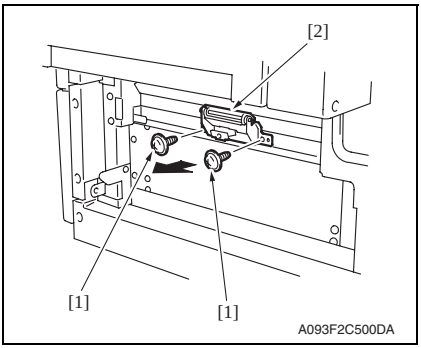

3. Remove two screws [1] and remove the paper separation roller mounting bracket assy [2].

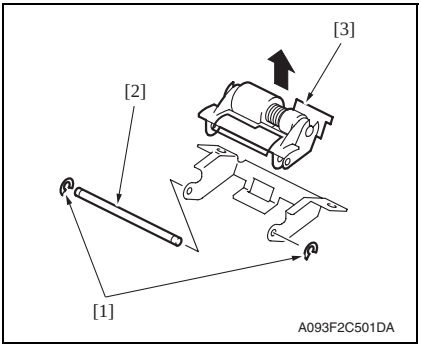

4. Remove two C-rings [1] and the shaft [2], and remove the paper separation roller fixing bracket assy [3].

NOTE

- **Be careful not to lose spring at this time.**

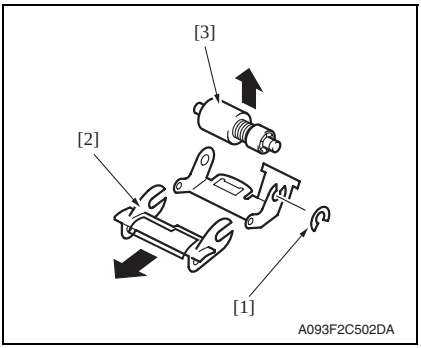

5. Remove the C-ring [1], the guide [2], and remove the separation roller assy [3].

6. Repeat steps 1 to 5 similarly for the paper feed tray 4.

NOTE

- **Install the separation roller assy while pressing the holder down so that it aligns to the metal bracket of the machine.**
- **Make sure that the separation roller assy is not tilted to the right or left when installed.**

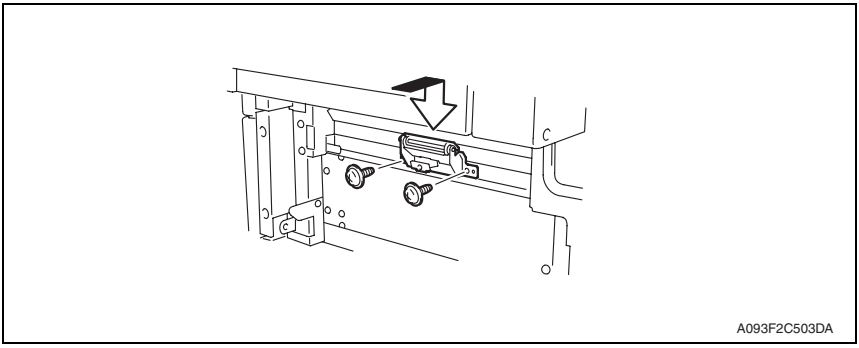

3.1.2 Replacing the feed roller

A. Periodically replaced parts/cycle

- Feed roller: Every 300,000 prints

NOTE

- **Replace the separation roller assy, feed roller and pick-up roller at the same time.**

B. Replacing procedure

1. Remove the rear right cover. (Remove the right lower cover for 4th row.)
See P.13
2. Remove the paper feed tray 3. (Remove the paper feed tray 4 from 4th row.)
3. Remove the paper separation roller mounting bracket assy.
See the procedures 1 to 3 in P.3 “Replacing the separation roller assy.”

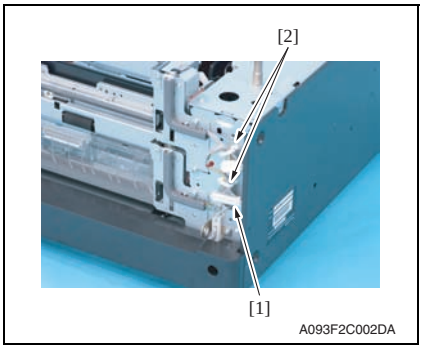

4. Disconnect the connector [1] and remove the harness from two wire saddles [2].

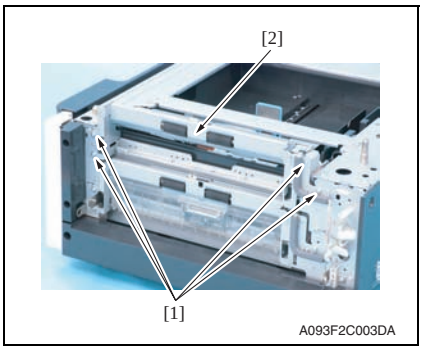

5. Remove four screws [1] and remove the feed unit [2].

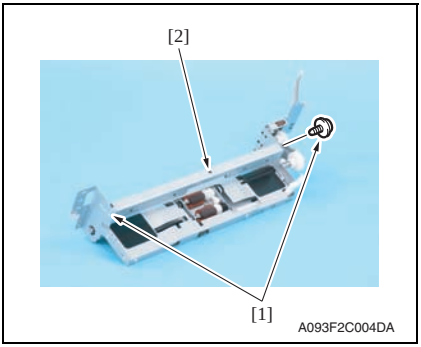

6. Remove two screws [1] and remove the mounting frame [2] for the paper separation roller mounting bracket assy.

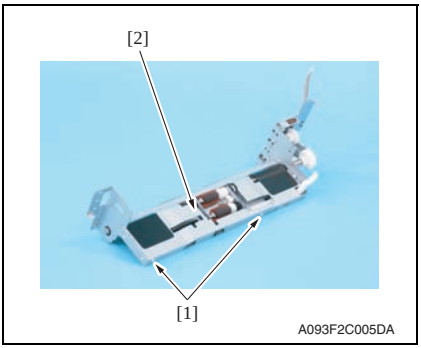

7. Remove two screws [1] and remove the feed roller cover [2].

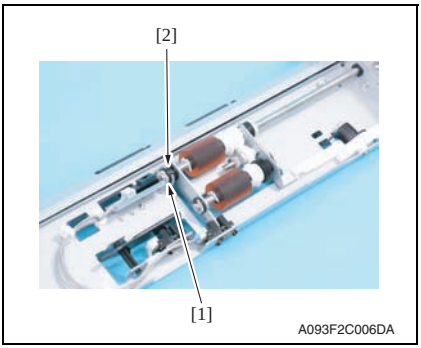

8. Remove the C-ring [1] and remove the bushing [2].

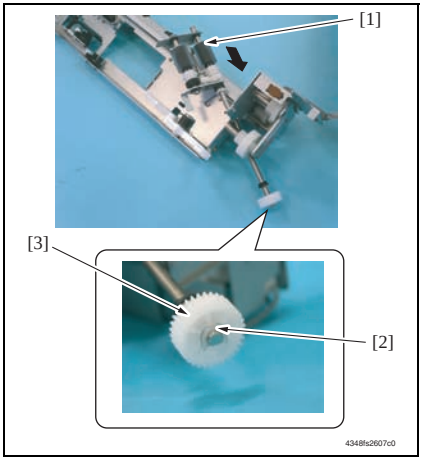

9. Shift the shaft assy [1] in the orientation as shown on the left, and remove the C-ring [2] and the gear [3].

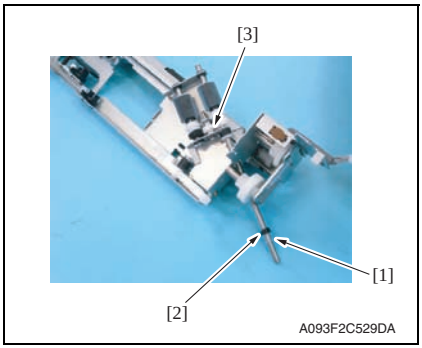

10. Remove the C-ring [1], the bushing [2], and remove the shaft assy [3].

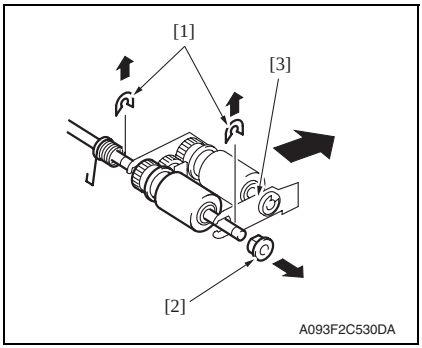

11. Remove two E-rings [1] and the bushing [2], and remove the pick-up roller fixing bracket assy [3].

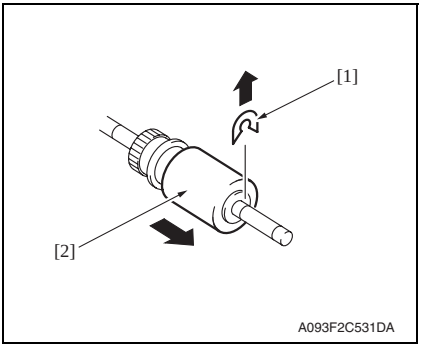

12. Remove the C-ring [1] and remove the feed roller [2].

13. Repeat steps 1 to 12 similarly for the paper feed tray 4.

3.1.3 Replacing the pick-up roller

A. Periodically replaced parts/cycle

- Pick-up roller: Every 300,000 prints

NOTE

- **Replace the separation roller assy, feed roller and pick-up roller at the same time.**

B. Replacing procedure

1. Remove the rear right cover. (Remove the right lower cover for 4th row.)
See P.13

2. Remove the paper feed tray 3. (Remove the paper feed tray 4 from 4th row.)

3. Remove the separation roller mounting bracket assy.
See the procedures 1 to 3 in P.3 “Replacing the separation roller assy.”

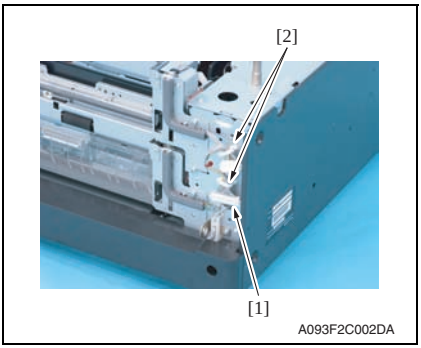

4. Disconnect the connector [1] and remove the harness from two wire saddles [2].

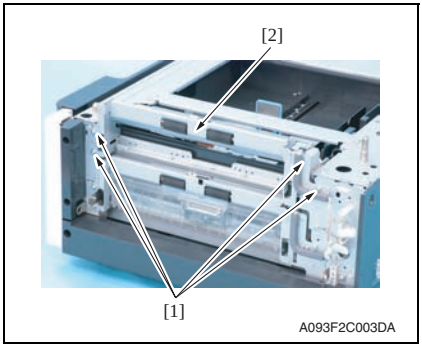

5. Remove four screws [1] and remove the feed unit [2].

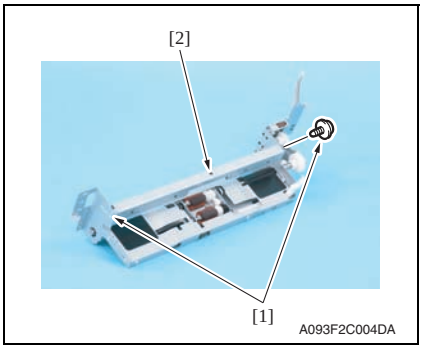

6. Remove two screws [1] and remove the mounting frame [2] for the paper separation roller mounting bracket assy.

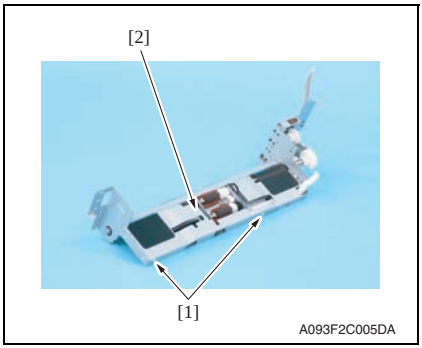

7. Remove two screws [1] and remove the feed roller cover [2].

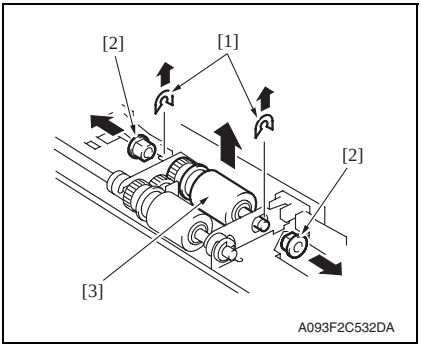

8. Remove two C-rings [1], two bushings [2], and remove the pick-up roller assy [3].

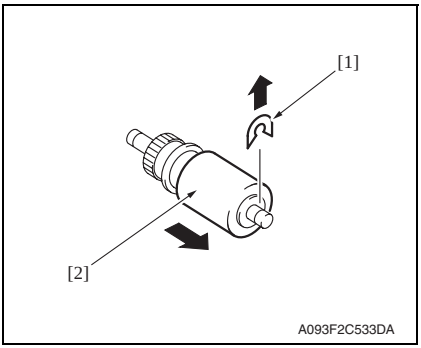

9. Remove the C-ring [1] and remove the pick-up roller [2].

10. Repeat steps 1 to 9 similarly for the paper feed tray 4.

4. Other

4.1 Disassembly/Adjustment prohibited items

A. Paint-locked screws

NOTE

- **To prevent loose screws, a screw lock in blue or green series color is applied to the screws.**
- **The screw lock is applied to the screws that may get loose due to the vibrations and loads created by the use of machine or due to the vibrations created during transportation.**
- **If the screw lock coated screws are loosened or removed, be sure to apply a screw lock after the screws are tightened.**

B. Red-painted screws

NOTE

- **The screws which are difficult to be adjusted in the field are painted in red in order to prevent them from being removed by mistake.**
- **Do not remove or loosen any of the red-painted screws in the field. It should also be noted that, when two or more screws are used for a single part, only one representative screw may be marked with the red paint.**

C. Variable resistors on board

NOTE

- **Do not turn the variable resistors on boards for which no adjusting instructions are given in Adjustment/Setting.**

D. Removal of PWBs

⚠ CAUTION

- **When removing a circuit board or other electrical component, refer to "Handling of PWBs" and follow the corresponding removal procedures.**
- **The removal procedures given in the following omit the removal of connectors and screws securing the circuit board support or circuit board.**
- **Where it is absolutely necessary to touch the ICs and other electrical components on the board, be sure to ground your body.**

4.2 Disassembly/Assembly/Cleaning list (Other parts)

4.2.1 Disassembly/Assembly parts list

No.	Section	Part name	Ref. page
1	Exterior parts	Right door	P.13
2		Rear right cover	P.13
3		Lower right cover	P.13
4		Front right cover	P.13
5		Rear cover	P.13
6		Left cover	P.13

4.2.2 Cleaning parts list

No.	Section	Part name	Ref. page
1	Feed section	Separation roller	P.14
2		Feed roller	P.15
3		Pick-up roller	P.15
4	Transport section	Vertical transport roller	P.16

4.3 Disassembly/Assembly procedure

4.3.1 Right door/Rear right cover/Lower right cover/Front right cover

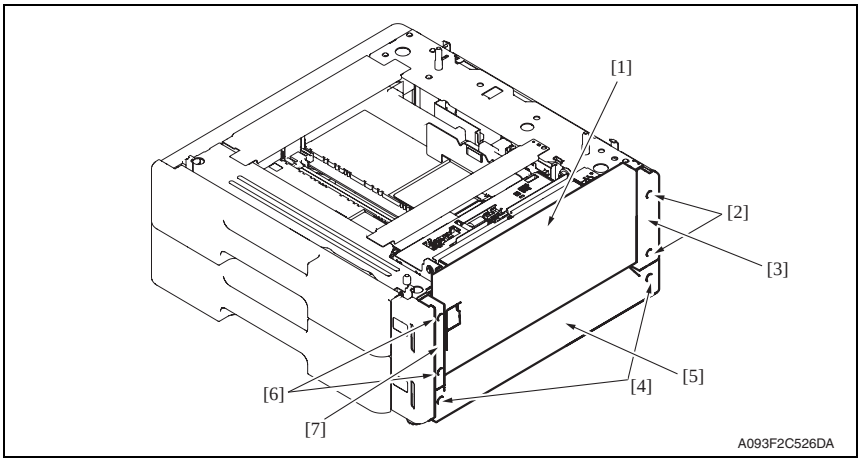

1. Open the right door [1].
2. Remove the right door [1].
3. Remove two screws [2] and remove the rear right cover [3].
4. Remove two screws [4] and remove the lower right cover [5].
5. Remove two screws [6] and remove the front right cover [7].

4.3.2 Rear cover/Left cover

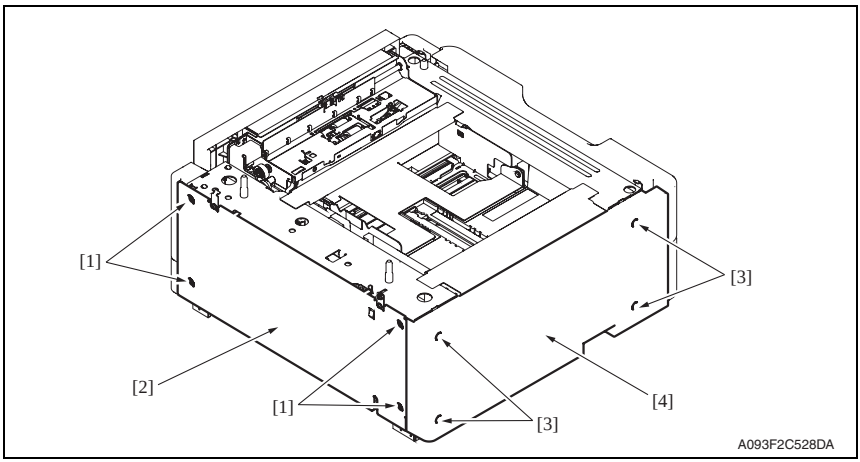

1. Remove four screws [1] and remove the rear cover [2].
2. Remove four screws [3] and remove the left cover [4].

4.4 Cleaning procedure

NOTE

- **The alcohol described in the cleaning procedure represents the isopropyl alcohol.**

4.4.1 Separation roller

1. Remove the right door.
See P.13

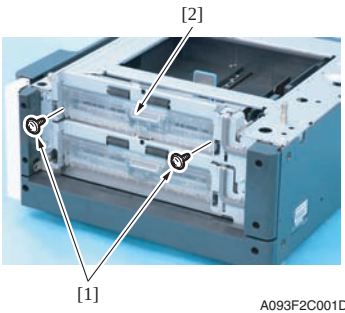

2. Remove two screws [1] and remove the jam access cover [2].

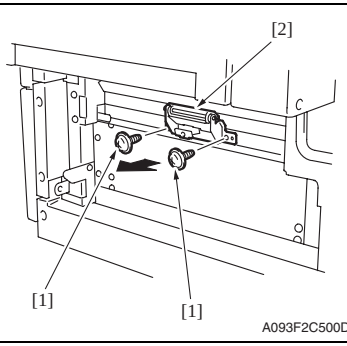

3. Remove two screws [1] and remove the separation roller mounting bracket assy [2].

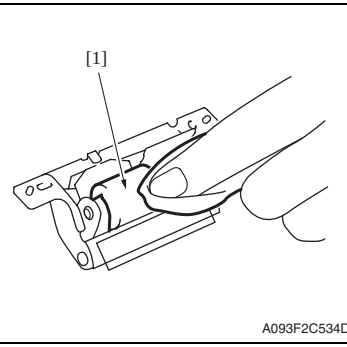

4. Using a cleaning pad dampened with alcohol, wipe the separation roller [1] clean of dirt.

5. Repeat steps 1 to 4 similarly for the paper feed tray 4.

4.4.2 Feed roller

1. Remove the paper feed tray 3. (remove the paper feed tray 4 from 4th row.)
2. Remove the separation roller mounting bracket assy.
See the procedures 1 to 3 in P.14 “Cleaning of the separation roller.”

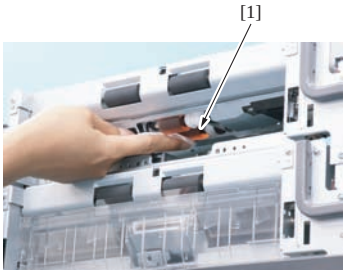

A093F2C008DA

3. Using a cleaning pad dampened with alcohol, wipe the feed roller [1] clean of dirt.

4. Repeat steps 1 to 3 similarly for the paper feed tray 4.

4.4.3 Pick-up roller

1. Remove the paper feed tray 3. (remove the paper feed tray 4 from 4th row.)
2. Remove the separation roller mounting bracket assy.
See the procedures 1 to 3 in P.14 “Cleaning of the separation roller.”

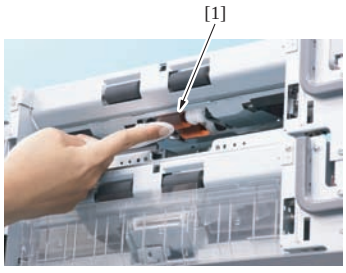

A093F2C007DA

3. Using a cleaning pad dampened with alcohol, wipe the pick-up roller [1] clean of dirt.

4. Repeat steps 1 to 3 similarly for the paper feed tray 4.

4.4.4 Vertical transport roller

1. Open the right door.

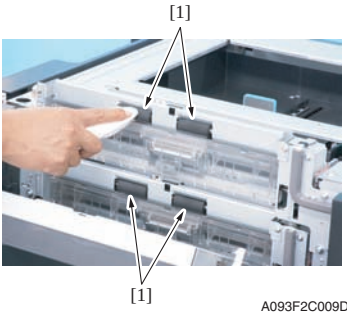

2. Using a cleaning pad dampened with alcohol, wipe the vertical transport roller [1] clean of dirt.

Adjustment/Setting

5. How to use the adjustment section

- "Adjustment/Setting" contains detailed information on the adjustment items and procedures for this machine.
- Throughout this "Adjustment/Setting," the default settings are indicated by " ".

Advance checks

Before attempting to solve the customer problem, the following advance checks must be made. Check to see if:

- The power supply voltage meets the specifications.
- The power supply is properly grounded.
- The machine shares the power supply with any other machine that draws large current intermittently (e.g., elevator and air conditioner that generate electric noise).
- The installation site is environmentally appropriate: high temperature, high humidity, direct sunlight, ventilation, etc.; levelness of the installation site.
- The defective image attributes to the data itself which is sent from the PC to the printer.
- The density is properly selected.
- Correct paper is being used for printing.
- The units, parts, and supplies used for printing (developer, PC drum, etc.) are properly replenished and replaced when they reach the end of their useful service life.
- Toner is not running out.

⚠ CAUTION

- **Be sure to unplug the power cord of the machine before starting the service job procedures.**
- **If it is unavoidably necessary to service the machine with its power turned ON, use utmost care not to be caught in the scanner cables or gears of the exposure unit.**
- **Special care should be used when handling the fusing unit which can be extremely hot.**
- **The developing unit has a strong magnetic field. Keep watches and measuring instruments away from it.**
- **Take care not to damage the PC drum with a tool or similar device.**
- **Do not touch IC pins with bare hands.**

6. Sensor check

6.1 Check procedure

A. Procedure

1. Call the Service Mode to the screen.
   See P.228 of the main body service manual.
2. Click [State Confirmation].
3. Click [Sensor Check].

6.1.1 Sensor check screen

- This is only typical screen which may be different from what are shown on each individual main body.

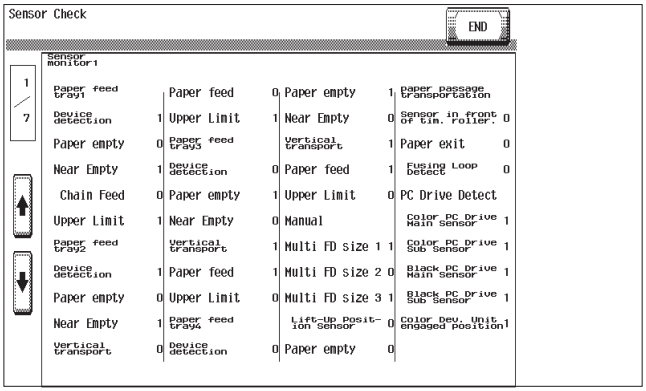

A093F3E007DA

6.1.2 Sensor check list

A. Sensor monitor1

Symbol	Panel display		Part/Signal name	Operation characteristics/Panel display	
				1	0
PS112	Paper feed tray3	Device Detection	Tray3 device detection sensor	Set	Out of position
PS115		Paper Empty	Tray3 empty sensor	Paper not present	Paper present
PS113		Near Empty	Tray3 near empty sensor	Blocked	Unblocked
PS117		Vertical Transport	Tray3 vertical transport sensor	Paper present	Paper not present
PS116		Take-Up	Tray3 paper feed sensor	Paper present	Paper not present
PS114		Upper Limit	Tray3 upper limit sensor	Raised Position	Not raised
PS121	Paper feed tray4	Device Detection	Tray4 device detection sensor	Set	Out of position
PS124		Paper Empty	Tray4 empty sensor	Paper not present	Paper present
PS122		Near Empty	Tray4 near empty sensor	Blocked	Unblocked
PS126		Vertical Transport	Tray4 vertical transport sensor	Paper present	Paper not present
PS125		Take-Up	Tray4 paper feed sensor	Paper present	Paper not present
PS123		Upper Limit	Tray4 upper limit sensor	Raised Position	Not raised

7. Mechanical adjustment

7.1 Adjusting the paper reference position

NOTE

- **Make this adjustment after any of the following procedures has been performed.**
  When the PH unit has been replaced.
  When the image on the print is offset in the sub scan direction.
  When a faint image occurs on the leading edge of the image.

7.1.1 Centering

A. Control panel

1. Call the Service Mode to the screen.
   See P.228 of the main body service manual.
2. Select [MachineAdjustment] → [Printer Area] → [Centering] → [Tray 3].
3. Press the Menu/Select key
4. Select [Print] and press the Menu/Select key to let the machine produce a test print.

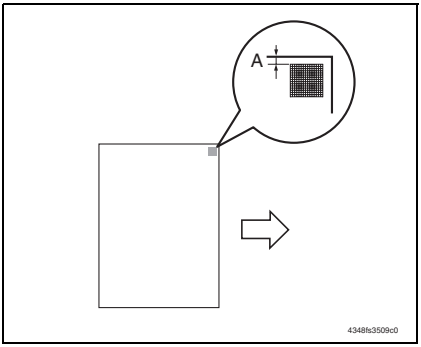

5. Measure the width of printed reference line A.
   Specification: 3.0 mm ± 1.0 mm
6. If the measured width A falls outside the specified range, enter the correction value using the ▲ or ▼ keys.
7. Produce another test print and check to see if width A falls within the specified range.

NOTE

- **If the use of the ▲ or ▼ keys does not allow the measurement to fall within the specified range, perform the following steps.**

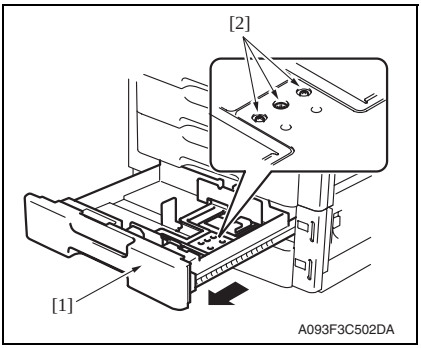

8. Slide out the drawer [1] and unload paper from it.
9. Loosen three screws [2] at the center of the paper lifting plate.

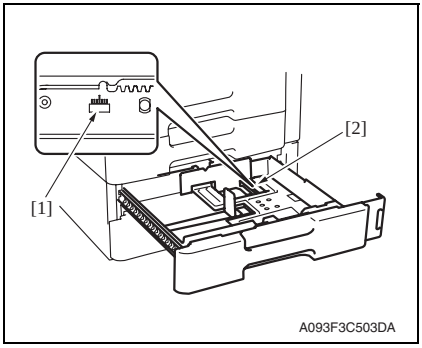

10. Watching the graduations [1] provided in the drawer, move the edge guide [2] in the rear.

- If width A is greater than the specified value, move the edge guide toward the front.
- If width A is smaller than the specified value, move the edge guide toward the rear.

11. Perform another test print and check the reference deviation.
12. Repeat the adjustment until the reference line falls within the specified range.
13. Tighten the adjustment screw.
14. Repeat steps 1 to 13 similarly for the paper feed tray 4.
15. Press the Menu/Select key.
16. Turn OFF the power switch, then wait for 10 sec. or more and turn ON the power switch.

B. Jig software

1. Call the Service Mode to the screen.
See P.228 of the main body service manual.
2. Click [Machine] → [Printer Area].
3. Select [Centering] → [3rd.].

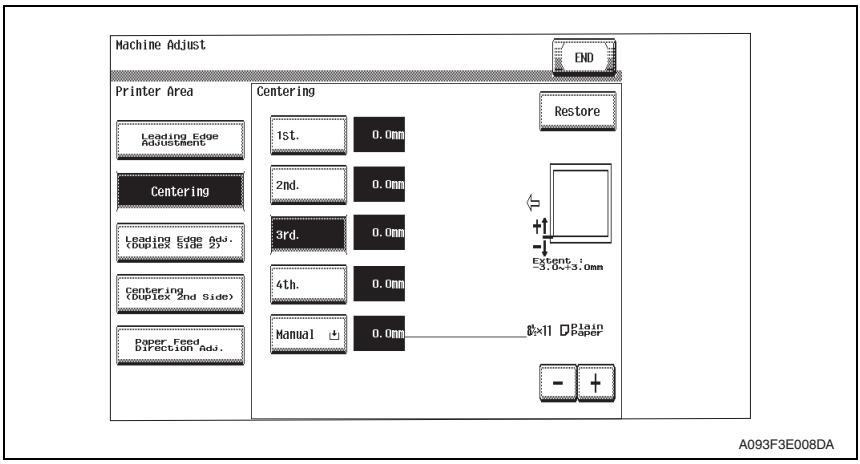

4. Click the Start key to let the machine produce a test print.

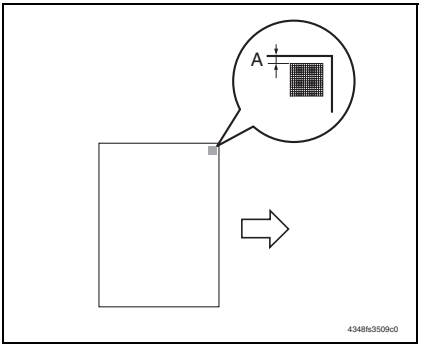

5. Measure the width of printed reference line A.
   Specification: 3.0 mm ± 1.0 mm
6. If the measured width A falls outside the specified range, enter the correction value using the [-] or [+] key.
7. Produce another test print and check to see if width A falls within the specified range.

NOTE

- **If the use of the [-] or [+] key does not allow the measurement to fall within the specified range, perform the following steps.**

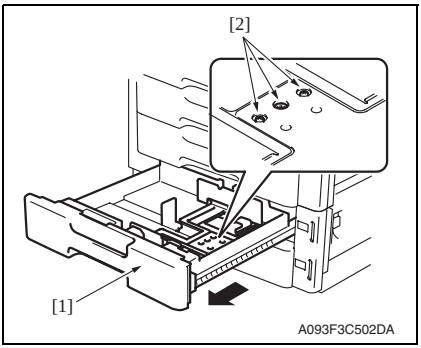

8. Slide out the drawer [1] and unload paper from it.
9. Loosen three screws [2] at the center of the paper lifting plate.

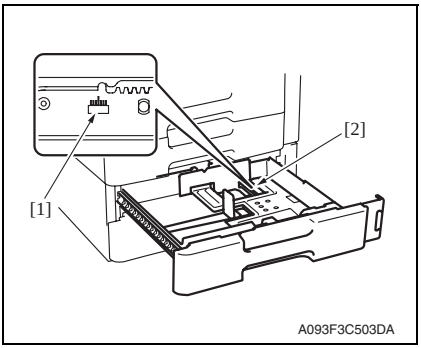

10. Watching the graduations [1] provided in the drawer, move the edge guide [2] in the rear.

- If width A is greater than the specified value, move the edge guide toward the front.
- If width A is smaller than the specified value, move the edge guide toward the rear.

11. Perform another test print and check the reference deviation.
12. Repeat the adjustment until the reference line falls within the specified range.
13. Tighten the adjustment screw.
14. Repeat steps 1 to 13 similarly for the paper feed tray 4.
15. Click [END].
16. Click [Exit] on the Service Mode screen.
17. Turn OFF the power switch, then wait for 10 sec. or more and turn ON the power switch.

7.1.2 Centering (Duplex)

A. Control panel

1. Call the Service Mode to the screen.
   See P.228 of the main body service manual.
2. Select [MachineAdjustment] → [Printer Area] → [Centering(Duplex)] → [Tray 3].
3. Press the Menu/Select key
4. Select [Print] and press the Menu/Select key to let the machine produce a test print.

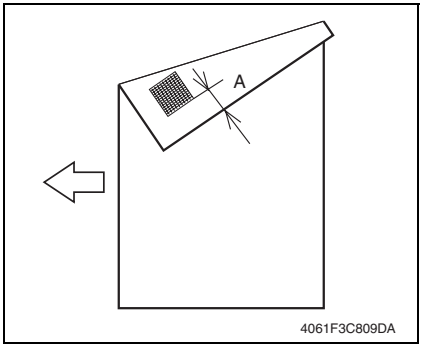

5. Measure the width of printed reference line A.
   Specification: 3.0 mm ± 2.0 mm
6. If the measured width A falls outside the specified range, enter the correction value using the ▲ or ▼ keys.
7. Produce another test print and check to see if width A falls within the specified range.
8. Repeat steps 1 to 7 similarly for the paper feed tray 4.
9. Press the Menu/Select key
10. Turn OFF the power switch, then wait for 10 sec. or more and turn ON the power switch.

B. Jig software

1. Call the Service Mode to the screen.
   See P.228 of the main body service manual.
2. Click [Machine] → [Printer Area].
3. Select [Centering (Duplex 2nd Side)] → [3rd.].

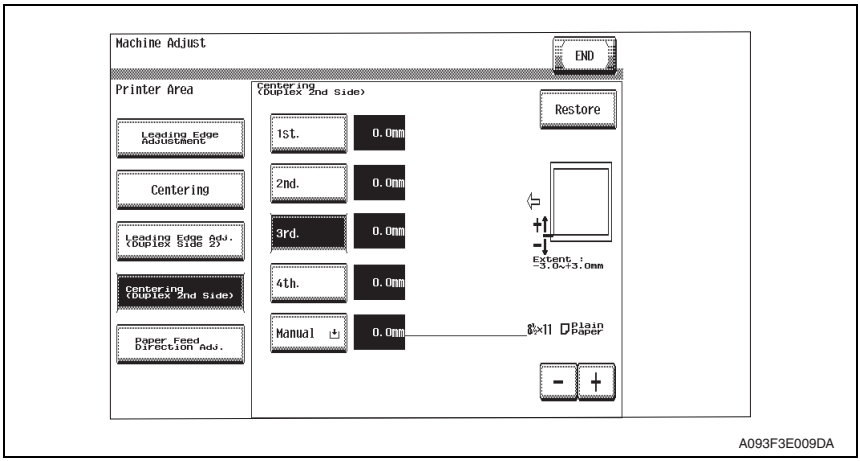

4. Click the Start key to let the machine produce a test pattern.

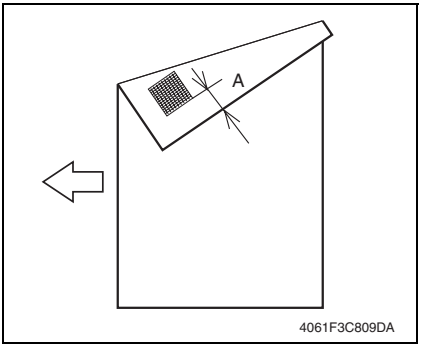

5. Measure the width of printed reference line A.
   Specification: 3.0 mm ± 2.0 mm
6. If the measured width A falls outside the specified range, enter the correction value using the [-] or [+] key.
7. Produce another test print and check to see if width A falls within the specified range.

8. Repeat steps 1 to 7 similarly for the paper feed tray 4.
9. Click [END].
10. Click [Exit] on the Service Mode screen.
11. Turn OFF the power switch, then wait for 10 sec. or more and turn ON the power switch.

Troubleshooting

8. Jam display

8.1 Misfeed display

- When a paper misfeed occurs, the LED line lights up red steadily and the misfeed message is displayed on the control panel of the machine.

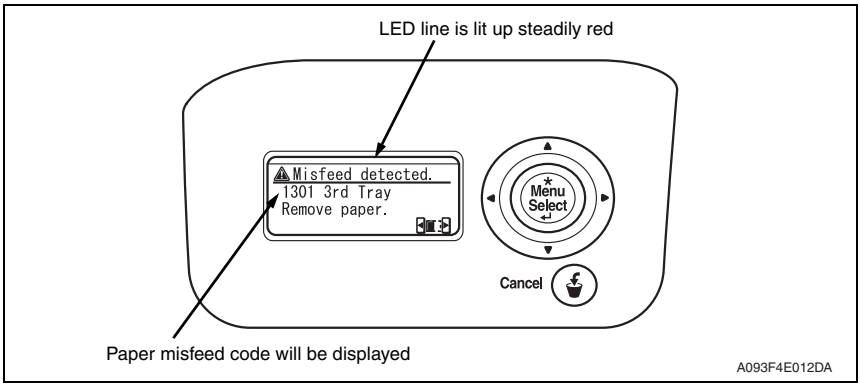

Code	Misfeed location	Misfeed access location	Action
1301	Tray 3 feed section	Right door	P.28
2001	Tray 3 paper vertical transport section	Vertical transport door	
1401	Tray 4 feed section	Right door	P.29
2001	Tray 4 paper vertical transport section	Vertical transport door	

8.1.1 Misfeed display resetting procedure

- Open the corresponding door, clear the sheet of paper misfed, and close the door.

8.2 Sensor layout

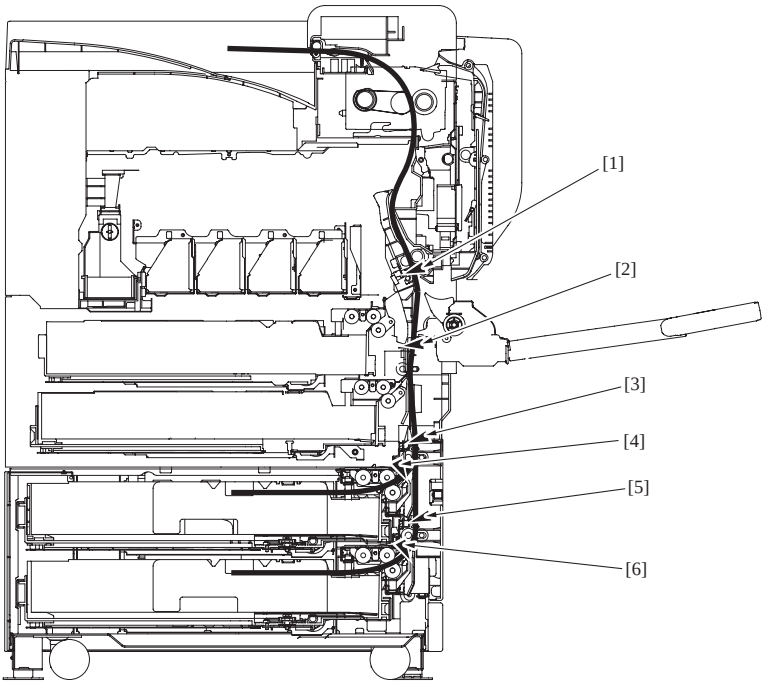

[1] Sensor in front of tim. roller (PS23)

[2] Paper feed tray 2 vertical transport sensor (PS16)

[3] Tray3 vertical transport sensor (PS117)

[4] Tray3 paper feed sensor (PS116)

[5] Tray4 vertical transport sensor (PS126)

[6] Tray4 paper feed sensor (PS125)

8.3 Solution

8.3.1 Initial check items

- When a paper misfeed occurs, first perform the following initial check items.

Check item	Action
Does paper meet product specifications?	Replace paper.
Is the paper curled, wavy, or damp?	Replace paper. Instruct the user on the correct paper storage procedures.
Is a foreign object present along the paper path, or is the paper path deformed or worn?	Clean the paper path and replace if necessary.
Are rolls/rollers dirty, deformed, or worn?	Clean or replace the defective roll/roller.
Are the edge guide and trailing edge stop at the correct position to accommodate the paper?	Set as necessary.
Are the actuators operating correctly?	Correct or replace the defective actuator.

8.3.2 Tray3 feed section/vertical transport section misfeed (PC-104/204)

A. Detection timing

Type	Description
Tray3 feed section/ vertical transport section misfeed detection	The leading edge of the paper does not block the tray3 vertical transport sensor (PS117) even after the set period of time has elapsed after the tray3 paper feed motor (M122) is energized.
	The paper feed tray 2 vertical transport sensor (PS16) is not blocked even after the lapse of a given period of time after the tray3 vertical transport sensor (PS117) has been blocked by a paper.
Tray3 vertical transport section loop registration reversing jam	Rise timing of load for registration is earlier than the one for making the loop at front of the registration roller at tray 3 paper feed.
Tray3 detection of paper remaining	The tray3 vertical transport sensor (PS117) is blocked when the power switch is set to ON, a door or cover is opened and closed, or a misfeed or malfunction is reset.
	The tray3 paper feed sensor (PS116) is blocked when the power switch is set to ON, a door or cover is opened and closed, or a misfeed or malfunction is reset.
Misfeed detected as a result of delayed deactivation of sensor	The tray3 vertical transport sensor (PS117) is not unblocked even after the lapse of a given period of time after PS117 has been blocked by a paper.

B. Action

Relevant electrical parts	
Tray3 paper feed sensor (PS116) Tray3 vertical transport sensor (PS117) Paper feed tray 2 vertical transport sensor (PS16) Tray3 paper feed motor (M122) Sensor in front of tim. roller (PS23)	PC control board (PCCB)

Step	Action	WIRING DIAGRAM	
		Control signal	Location (Electrical components)
1	Initial check items	—	—
2	PS23 I/O check, sensor check	PRCB CN1PRCB-3 (ON)	bizhub C353P D-18
3	PS116 I/O check, sensor check	PCCB PJ6PCCB-8 (ON)	PC-104, PC-204 B-1 to 2
4	PS117 I/O check, sensor check	PCCB PJ6PCCB-11 (ON)	PC-104, PC-204 B-2
5	PS16 I/O check, sensor check	PRCB CN9PRCB-11 (ON)	bizhub C353P D-10
6	M122 operation check	PCCB PJ5PCCB-1 to 4	PC-104, PC-204 B-2 to 3
7	PCCB replacement	—	—

8.3.3 Tray4 feed section/vertical transport section misfeed (PC-204)

A. Detection timing

Type	Description
Tray4 feed section/ vertical transport section misfeed detection	The leading edge of the paper does not block the tray4 vertical transport sensor (PS126) even after the set period of time has elapsed after the tray4 paper feed motor (M123) is energized.
	The tray3 vertical transport sensor (PS117) is not blocked even after the lapse of a given period of time after the tray4 vertical transport sensor (PS126) has been blocked by a paper.
Tray4 vertical transport section loop registration reversing jam	Rise timing of load for registration is earlier than the one for making the loop at front of the timing roller at tray 4 paper feed.
Tray4 detection of paper remaining	The tray4 vertical transport sensor (PS126) is blocked when the power switch is set to ON, a door or cover is opened and closed, or a misfeed or malfunction is reset.
	The tray4 paper feed sensor (PS125) is blocked when the power switch is set to ON, a door or cover is opened and closed, or a misfeed or malfunction is reset.
Misfeed detected as a result of delayed deactivation of sensor	The tray4 vertical transport sensor (PS126) is not unblocked even after the lapse of a given period of time after PS126 has been blocked by a paper.

B. Action

Relevant electrical parts	
Tray4 paper feed sensor (PS125) Tray4 vertical transport sensor (PS126) Tray3 vertical transport sensor (PS117) Tray4 paper feed motor (M123) Sensor in front of tim. roller (PS23)	PC control board (PCCB)

Step	Action	WIRING DIAGRAM	
		Control signal	Location (Electrical components)
1	Initial check items	—	—
2	PS23 I/O check, sensor check	PRCB CN1PRCB-3 (ON)	bizhub C353P D-18
3	PS125 I/O check, sensor check	PCCB PJ10PCCB-8 (ON)	PC-204 G-5
4	PS126 I/O check, sensor check	PCCB PJ11PCCB-2 (ON)	PC-204 G-5
5	PS117 I/O check, sensor check	PCCB PJ6PCCB-11 (ON)	PC-104, PC-204 B-2
6	M123 operation check	PCCB PJ9PCCB-1 to 4	PC-204 G-6
7	PCCB replacement	—	—

9. Trouble code

9.1 Trouble code display

- The machine's CPU performs a self-diagnostics function that, on detecting a malfunction, displays the corresponding malfunction code on the control panel.

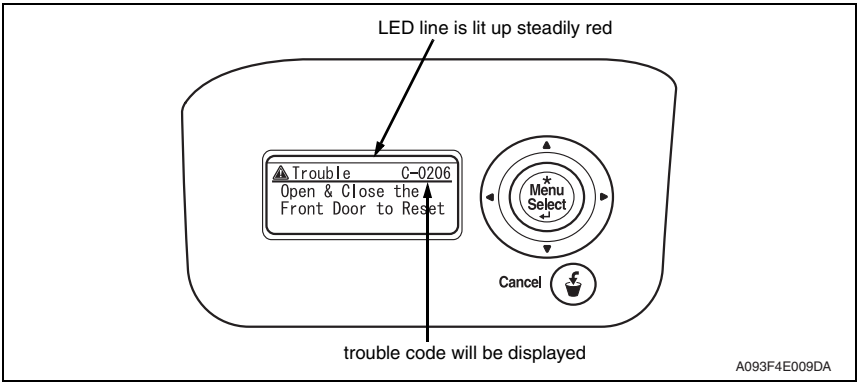

9.2 Trouble code list

Code	Item	Description
C0206	Tray3 lift-up failure	• The lift-up upper sensor is not blocked even after the set period of time has elapsed after the paper lift-up operation for the drawer began.
C0208	Tray4 lift-up failure	

- Open and close the front door, or turn OFF the power switch. Then, wait for 10 sec. or more and turn ON the power switch to reset the malfunction display.

9.3 Solution

9.3.1 C0206: Tray3 lift-up failure
C0208: Tray4 lift-up failure

Relevant electrical parts	
Tray3 lift-up motor (M124) Tray4 lift-up motor (M125) Tray3 upper limit sensor (PS114) Tray4 upper limit sensor (PS123)	PC control board (PCCB) MFP board (MFPB) DC power supply (DCPU)

Step	Action	WIRING DIAGRAM	
		Control signal	Location (Electrical components)
1	Check the motor and sensor connectors for proper connection, and correct as necessary.	—	—
2	Check the connector of each motor for proper drive coupling, and correct as necessary.	—	—
3	Check the DCPU connector for proper connection, and correct as necessary.	—	—
4	PS114 I/O check, sensor check	PCCB PJ6PCCB-3 (ON)	PC-104, PC-204 B-1
5	PS123 I/O check, sensor check	PCCB PJ10PCCB-3 (ON)	PC-204 G-4
6	M124 operation check	PCCB PJ4PCCB-4 to 5	PC-104, PC-204 B-3 to 4
7	M125 operation check	PCCB PJ8PCCB-12 to 13	PC-204 G-1
8	PCCB replacement	—	—
9	MFPB replacement	—	—
10	DCPU replacement	—	—

Blank Page

KONICA MINOLTA

SERVICE MANUAL

FIELD SERVICE

PC-405

Revision history

After publication of this service manual, the parts and mechanism may be subject to change for improvement of their performance.
Therefore, the descriptions given in this service manual may not coincide with the actual machine.

When any change has been made to the descriptions in the service manual, a revised version will be issued with a revision mark added as required.

Revision mark:

- To indicate clearly a section revised, show to the left of the revised section.
  A number within represents the number of times the revision has been made.

- To indicate clearly a section revised, show in the lower outside section of the corresponding page.
  A number within represents the number of times the revision has been made.

NOTE

Revision marks shown in a page are restricted only to the latest ones with the old ones deleted.

- When a page revised in Ver. 2.0 has been changed in Ver. 3.0:
  The revision marks for Ver. 3.0 only are shown with those for Ver. 2.0 deleted.
- When a page revised in Ver. 2.0 has not been changed in Ver. 3.0:
  The revision marks for Ver. 2.0 are left as they are.

Date	Service manual Ver.	Revision mark	Descriptions of revision
2007/10	1.0	—	Issue of the first edition

CONTENTS

PC-405

General

1. Product specification 1
2. Paper Feed Path 2

Maintenance

3. Periodical check 3
3.1 Maintenance procedure (Periodical check parts) 3
3.1.1 Replacing the separation roller assy 3
3.1.2 Replacing the feed roller 5
3.1.3 Replacing the pick-up roller 8
4. Other 10
4.1 Disassembly/Adjustment prohibited items 10
4.2 Disassembly/Assembly/Cleaning list (Other parts) 11
4.2.1 Disassembly/Assembly parts list 11
4.2.2 Cleaning parts list 11
4.3 Disassembly/Assembly procedure 12
4.3.1 Right door/Rear right cover/Lower right cover/Front right cover 12
4.3.2 Rear cover/Left cover 12
4.3.3 Drawer 13
4.3.4 Wire 14
4.4 Cleaning procedure 18
4.4.1 Separation roller 18
4.4.2 Feed roller 18
4.4.3 Pick-up roller 19
4.4.4 Vertical transport roller 20

Adjustment/Setting

5. How to use the adjustment section 21
6. Sensor check 22
6.1 Check procedure 22
6.1.1 Sensor check screen 22
6.1.2 Sensor check list 23
7. Mechanical adjustment 24
7.1 Adjusting the paper reference position 24

7.1.1 Centering 24
7.1.2 Centering (Duplex) 28
7.2 Shifter movement timing belt adjustment 30

Troubleshooting

8. Jam display 33
8.1 Misfeed display 33
8.1.1 Misfeed display resetting procedure 33
8.2 Sensor layout 34
8.3 Solution 35
8.3.1 Initial check items 35
8.3.2 LCT paper feed section/vertical transport section misfeed 36
9. Trouble code 37
9.1 Trouble code display 37
9.2 Trouble code list 38
9.3 Solution 40
9.3.1 C0001: LCT communication error 40
9.3.2 C0209: LCT elevator motor failure 40
9.3.3 C0210: LCT lift failure 41
9.3.4 C0212: LCT lock release failure 41
9.3.5 C0213: LCT shift gate operation failure 42
9.3.6 C0214: LCT shift failure 42
9.3.7 C0215: LCT shift motor failure 43

General

1. Product specification

A. Type

Name	Large capacity cabinet
Type	Front loading type LCC
Installation	Desk type
Document alignment	Center

B. Paper

Type	Size	Capacity
Plain paper (60 to 90 g/m² (16 to 24 lb))	A4, 8-1/2 x 11	2,500 sheets
Thick paper 1 (91 to 150 g/m² (24.25 to 40 lb))		1,000 sheets
Thick paper 2 (151 to 209 g/m² (40 to 55.5 lb))		
Thick paper 3 (210 to 256 g/m² (55.75 to 68 lb))		

C. Machine specifications

Power requirements	DC 24 V ± 10% (supplied from the main body)
	DC 5 V ± 5%
Max. power consumption	45 W or less
Dimensions	600 mm (W) x 578 mm (D) x 301 mm (H) 23.5 inch (W) x 22.75 inch (D) x 11.75 inch (H)
Weight	28.0 kg (61.75 lb)

D. Operating environment

Conforms to the operating environment of the main body.

NOTE

- **These specifications are subject to change without notice.**

2. Paper Feed Path

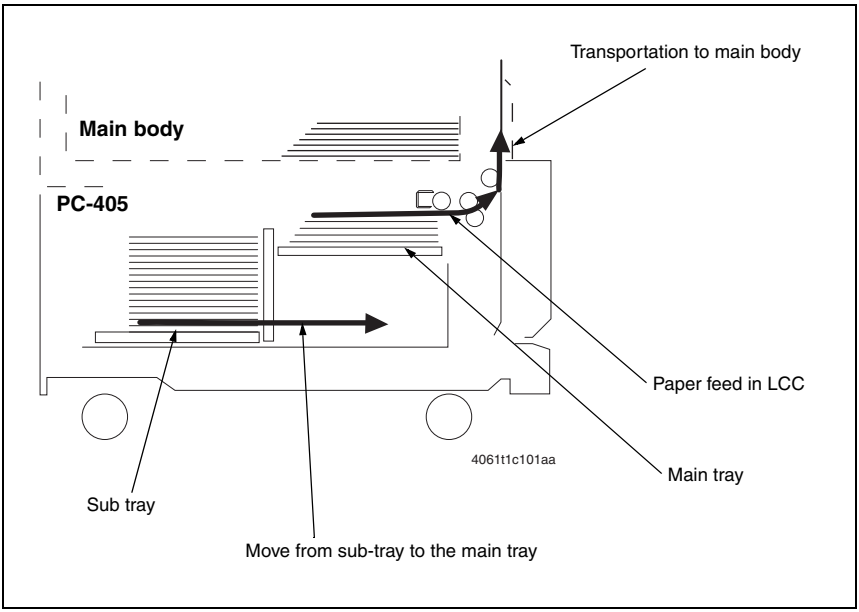

Maintenance

3. Periodical check

3.1 Maintenance procedure (Periodical check parts)

3.1.1 Replacing the separation roller assy

A. Periodically replaced parts/cycle

- Separation roller assy: Every 300,000 prints

NOTE

- **Replace the separation roller assy, feed roller and pick-up roller at the same time.**

B. Replacing procedure

1. Remove the right door.
See P.12

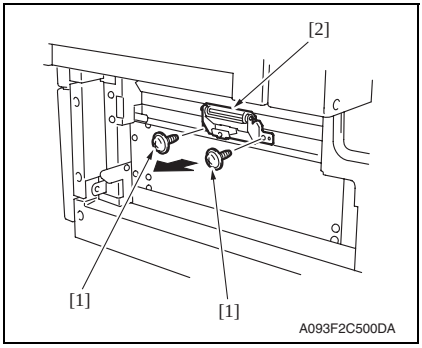

2. Remove two screws [1] and remove the separation roller mounting bracket assy [2].

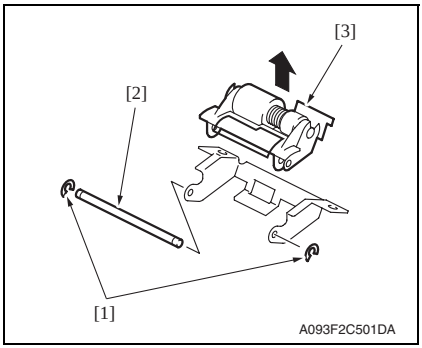

3. Remove two C-rings [1] and the shaft [2], and remove the separation roller fixing bracket assy [3].

NOTE

- **Be careful not to lose spring at this time.**

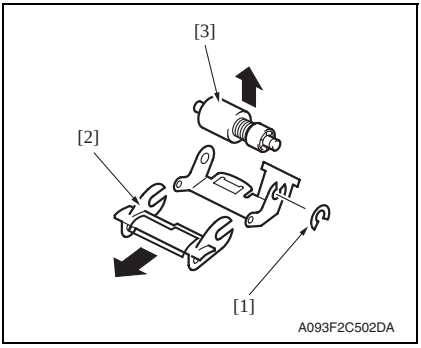

4. Remove the C-ring [1], the guide [2], and remove the separation roller assy [3].

NOTE

- **Install the separation roller assy while pressing the holder down so that it aligns to the metal bracket of the machine.**
- **Make sure that the separation roller assy is not tilted to the right or left when installed.**

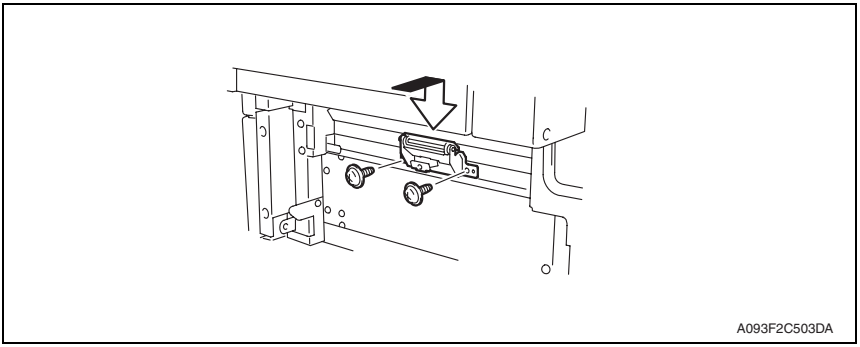

3.1.2 Replacing the feed roller

A. Periodically replaced parts/cycle

- Feed roller: Every 300,000 prints

NOTE

- **Replace the separation roller assy, feed roller and pick-up roller at the same time.**

B. Replacing procedure

1. Remove the right door.
See P.12
2. Remove the rear cover and the rear right cover.
See P.12

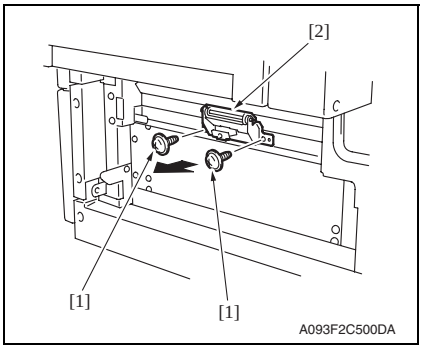

3. Remove two screws [1] and separation roller mounting bracket assy [2].

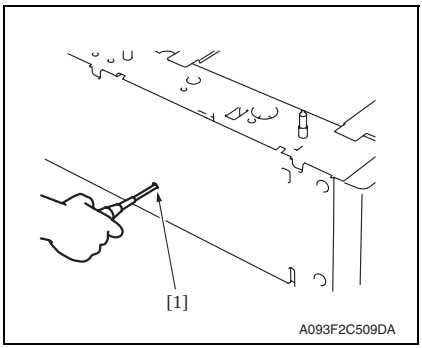

4. Insert a driver into the hole [1] at the back of the feed tray and pull out the paper feed tray.

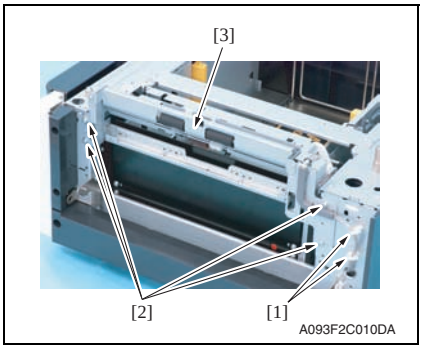

5. Remove two wire saddles [1] and four screws [2], and remove the paper feed unit [3].

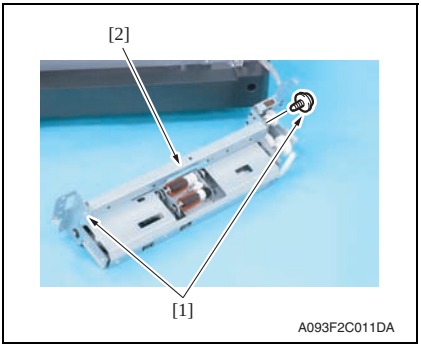

6. Remove two screws [1] and remove the mounting frame [2] for the separation roller mounting bracket assy.

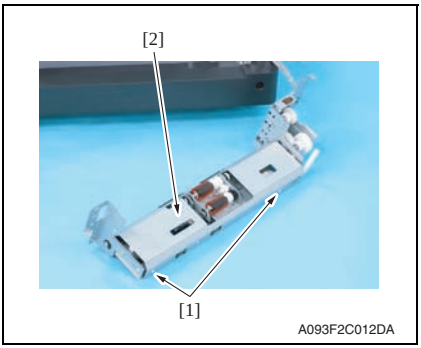

7. Remove two screws [1] and remove the paper feed roller cover [2].

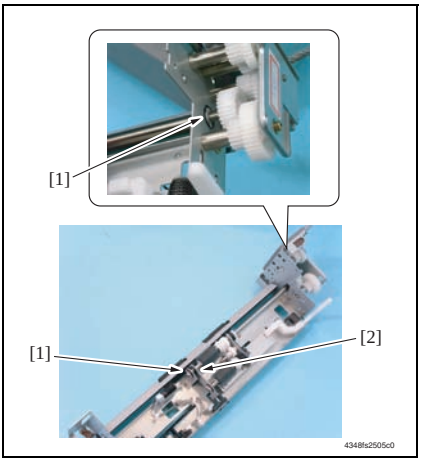

8. Remove two C-rings [1] and remove the bushing [2].

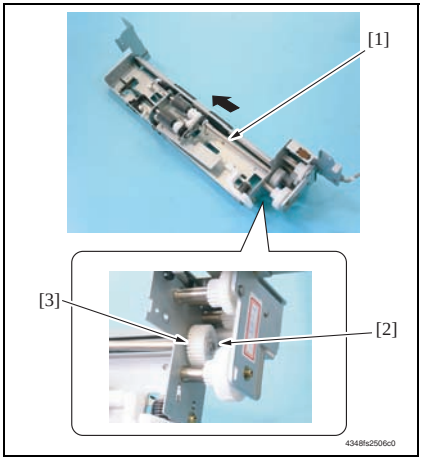

9. Shift the shaft assy [1] in the orientation as shown on the left, and remove the C-ring [2] and the gear [3].

10. Remove the shaft assy [1].

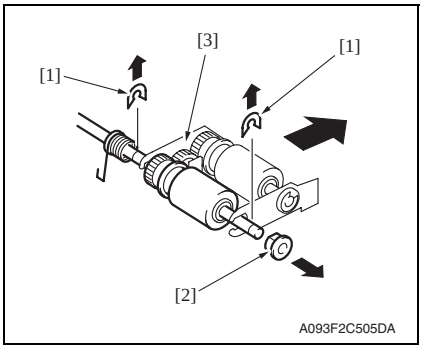

11. Remove two E-rings [1] and the bushing [2], and remove the pick-up roller fixing bracket assy [3].

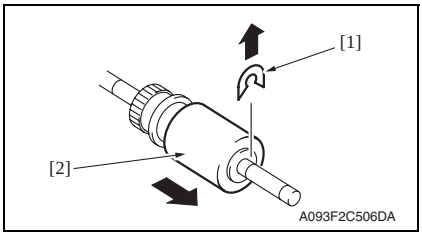

12. Remove the C-ring [1] and remove the feed roller [2].

3.1.3 Replacing the pick-up roller

A. Periodically replaced parts/cycle

- Pick-up roller: Every 300,000 prints

NOTE

- **Replace the separation roller assy, feed roller and pick-up roller at the same time.**

B. Replacing procedure

1. Remove the right door.
See P.12
2. Remove the rear cover and the rear right cover.
See P.12

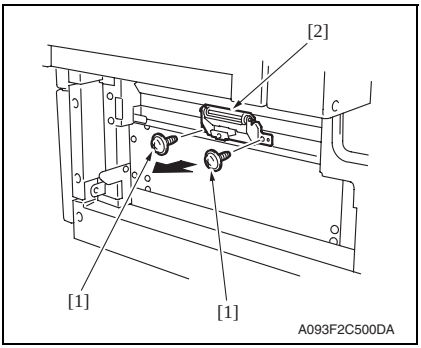

3. Remove two screws [1] and separation roller mounting bracket assy [2].

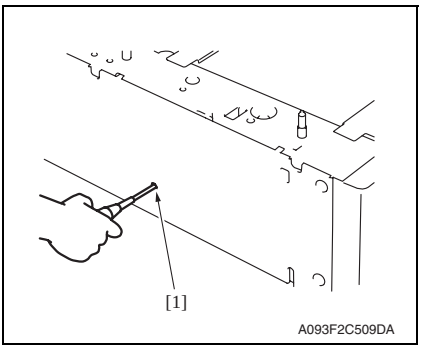

4. Insert a driver into the hole [1] at the back of the feed tray and pull out the paper feed tray.

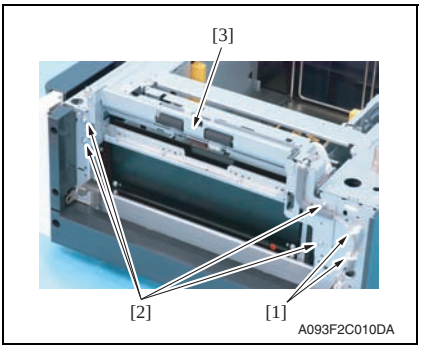

5. Remove two wire saddles [1] and four screws [2], and remove the paper feed unit [3].

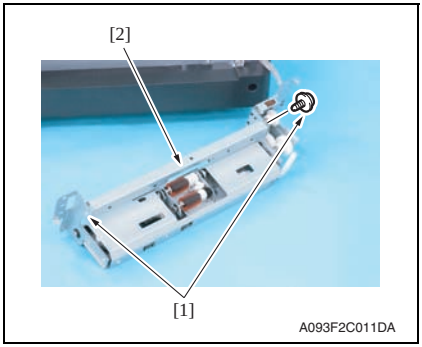

6. Remove two screws [1] and remove the mounting frame [2] for the separation roller mounting bracket assy.

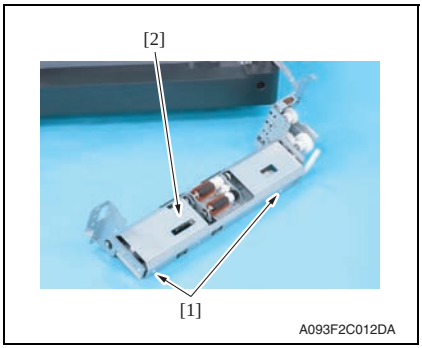

7. Remove two screws [1] and remove the paper feed roller cover [2].

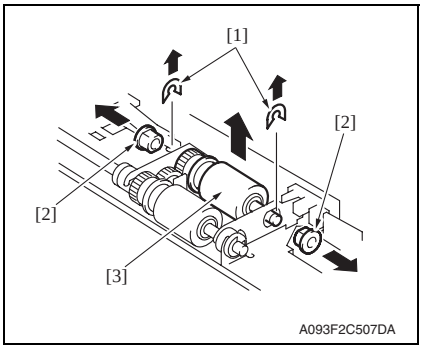

8. Remove two C-rings [1], two bushings [2], and the pick-up roller assy [3].

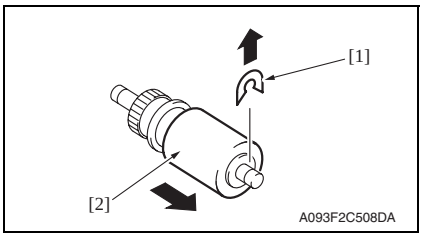

9. Remove the C-ring [1] and remove the pick-up roller [2].

4. Other

4.1 Disassembly/Adjustment prohibited items

A. Paint-locked screws

NOTE

- **To prevent loose screws, a screw lock in blue or green series color is applied to the screws.**
- **The screw lock is applied to the screws that may get loose due to the vibrations and loads created by the use of machine or due to the vibrations created during transportation.**
- **If the screw lock coated screws are loosened or removed, be sure to apply a screw lock after the screws are tightened.**

B. Red-painted screws

NOTE

- **The screws which are difficult to be adjusted in the field are painted in red in order to prevent them from being removed by mistake.**
- **Do not remove or loosen any of the red-painted screws in the field. It should also be noted that, when two or more screws are used for a single part, only one representative screw may be marked with the red paint.**

C. Variable resistors on board

NOTE

- **Do not turn the variable resistors on boards for which no adjusting instructions are given in Adjustment/Setting.**

D. Removal of PWBs

⚠ CAUTION

- **When removing a circuit board or other electrical component, refer to "Handling of PWBs" and follow the corresponding removal procedures.**
- **The removal procedures given in the following omit the removal of connectors and screws securing the circuit board support or circuit board.**
- **Where it is absolutely necessary to touch the ICs and other electrical components on the board, be sure to ground your body.**

4.2 Disassembly/Assembly/Cleaning list (Other parts)

4.2.1 Disassembly/Assembly parts list

No.	Section	Part name	Ref. page
1	Exterior parts	Right door	P.12
2		Rear right cover	P.12
3		Lower right cover	P.12
4		Front right cover	P.12
5		Rear cover	P.12
6		Left cover	P.12
7	Unit	Drawer	P.13
8	Other	Wire	P.14

4.2.2 Cleaning parts list

No.	Section	Part name	Ref. page
1	Feed section	Separation roller	P.18
2		Feed roller	P.18
3		Pick-up roller	P.19
4	Transport section	Vertical transport roller	P.20

4.3 Disassembly/Assembly procedure

4.3.1 Right door/Rear right cover/Lower right cover/Front right cover

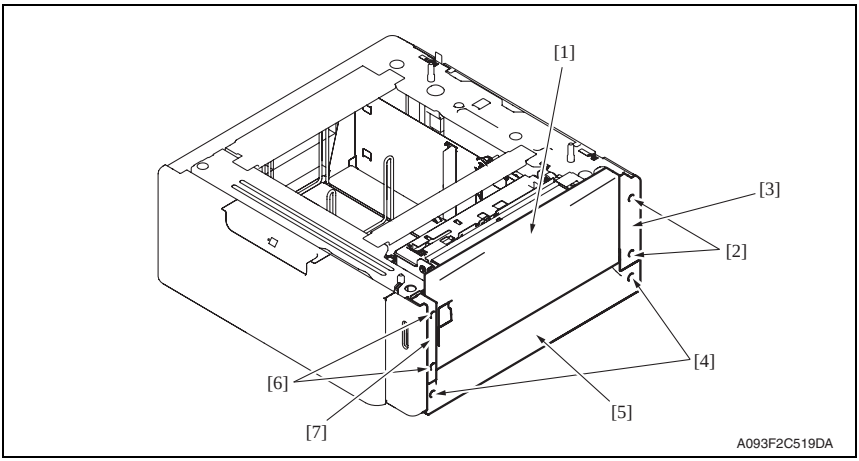

1. Open the right door [1].
2. Remove the right door [1].
3. Remove two screws [2] and remove the rear right cover [3].
4. Remove two screws [4] and remove the lower right cover [5].
5. Remove two screws [6] and remove the front right cover [7].

4.3.2 Rear cover/Left cover

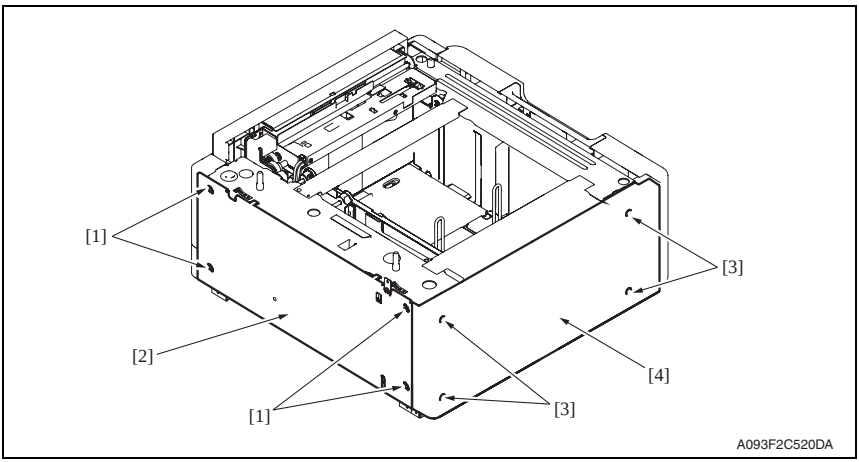

1. Remove four screws [1] and remove the rear cover [2].
2. Remove four screws [3] and remove the left cover [4].

4.3.3 Drawer

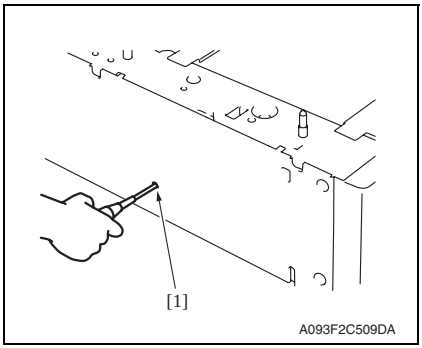

1. Insert a driver into the hole [1] at the back of the feed tray and pull out the paper feed tray.

2. Remove the paper.

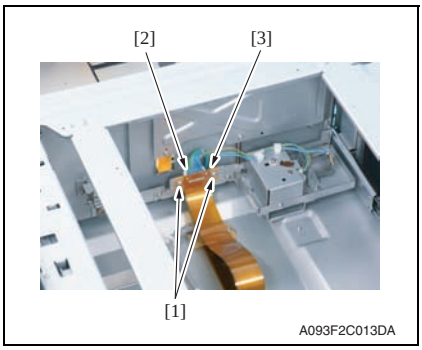

3. Remove two screws [1], the connector [2], and remove the connector board [3].

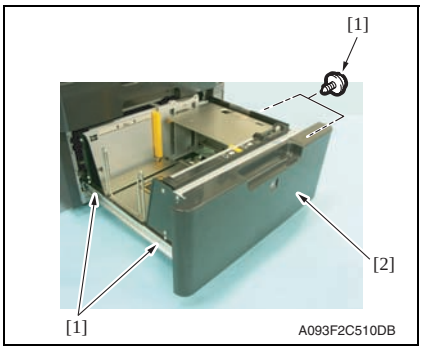

4. Remove four screws [1] and remove the drawer [2].

NOTE

- **When removing the drawer, be careful not to drop the drawer from the guide rails.**

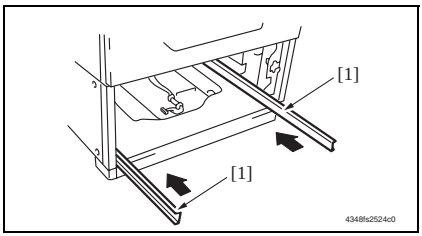

⚠ CAUTION

- **To prevent injuries, slide the guide rail [1] into the machine.**

4.3.4 Wire

1. Remove the drawer.
See P.13

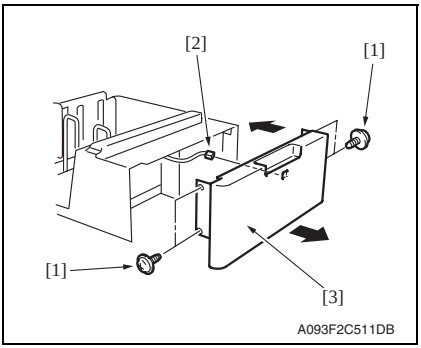

2. Remove four screws [1] and disconnect the connector [2], and remove the front cover assy [3].

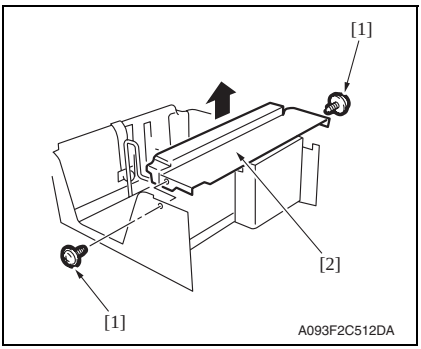

3. Remove two screws [1] and the inner cover assy [2].

NOTE

- **Do not peel off pulley protective mylar sheet.**

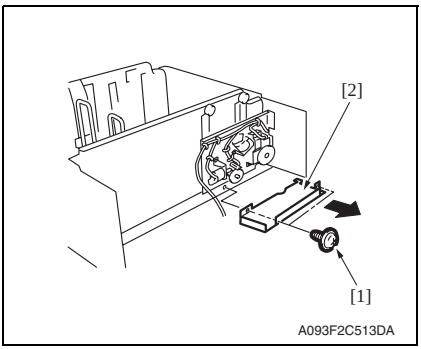

4. Remove two screws [1] and remove the driver cover [2].

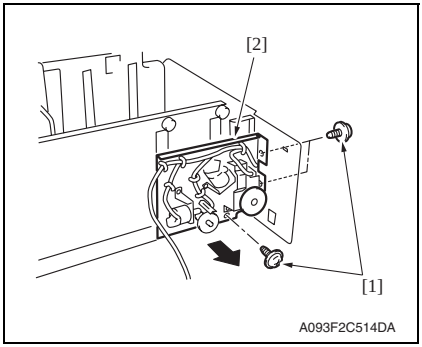

5. Remove three screws [1] and remove the driver mounting plate assy [2].

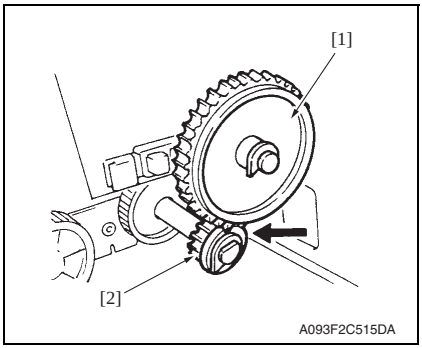

NOTE

- **When assembling, be sure to engage rib of gear 1 [1] with convex section of gear 2 [2].**

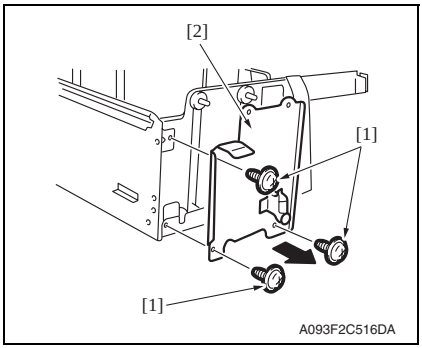

6. Remove three screws [1] and remove the reinforcement bracket assy [2].

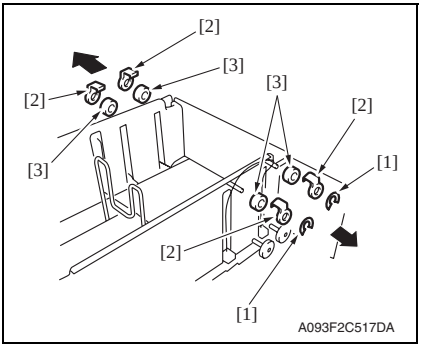

7. Remove two C-clips [1].
8. Remove four pulley covers [2].
9. Unhook four pulleys [3].

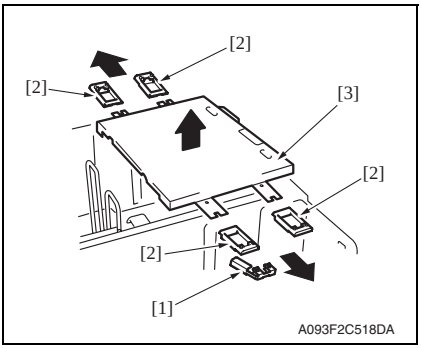

10. Remove the ground plate [1].
11. Remove four cable holding jigs [2] and remove the main drawer [3].

NOTE

- **Use care not to bend the wires.**

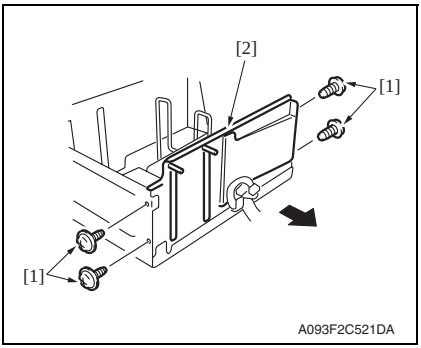

12. Remove four screws [1] and remove the rear trailing edge assy [2].

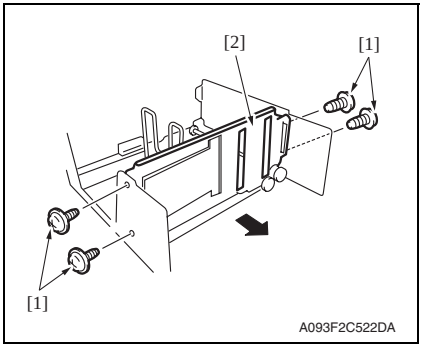

13. Remove four screws [1] and remove the front trailing edge assy [2].

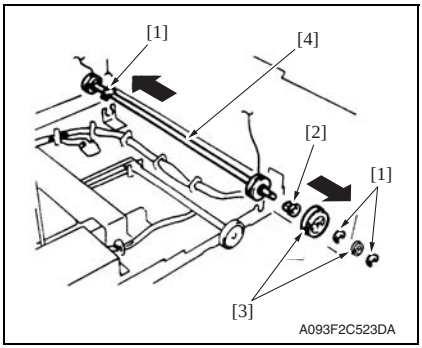

14. Remove three C-rings [1], the bushing [2], and two gears [3].
15. Remove the feed drum assy [4].

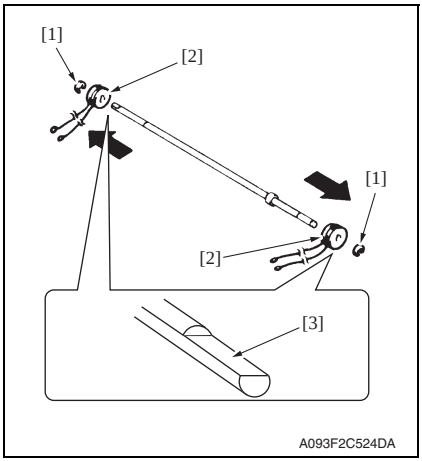

16. Remove two C-rings [1] and the feed drum [2].

NOTE

- **Take care not to lose fixing pins.**
- **When reinstalling the feed drum, check that the direction of the wire coming from both feed drums are the same.**
- **Install so that cut parts [3] at both ends of shaft face up.**

4.4 Cleaning procedure

NOTE

- **The alcohol described in the cleaning procedure represents the isopropyl alcohol.**

4.4.1 Separation roller

1. Remove the right door.
See P.12

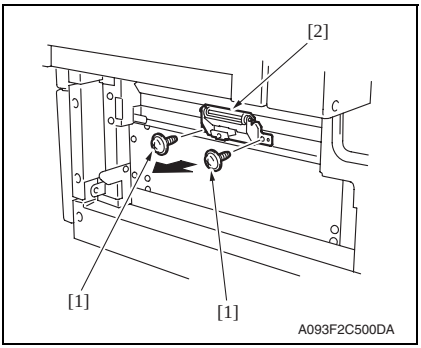

2. Remove two screws [1] and separation roller mounting bracket assy [2].

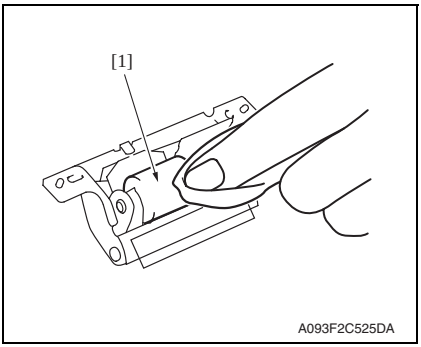

3. Using a cleaning pad dampened with alcohol, wipe the separation roller [1] clean of dirt.

4.4.2 Feed roller

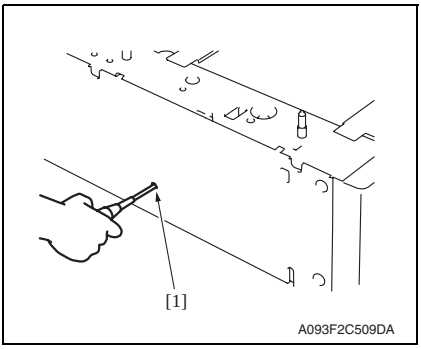

1. Insert a driver into the hole [1] at the back of the feed tray and pull out the paper feed tray.

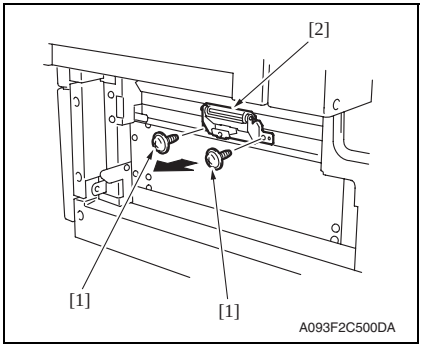

2. Remove two screws [1] and separation roller mounting bracket assy [2].

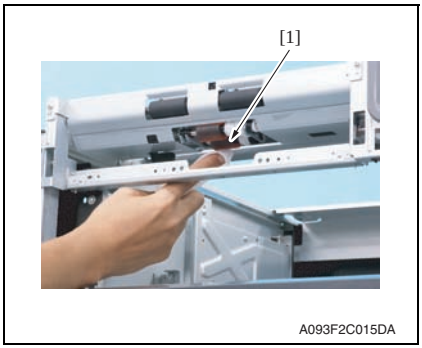

3. Using a cleaning pad dampened with alcohol, wipe the feed roller [1] clean of dirt.

4.4.3 Pick-up roller

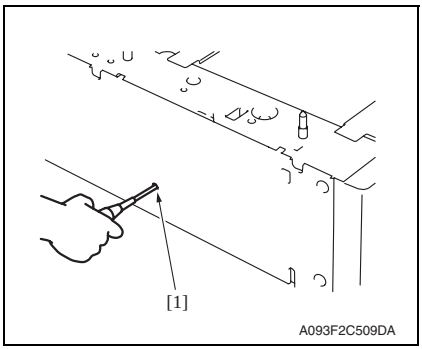

1. Insert a driver into the hole [1] at the back of the feed tray and pull out the paper feed tray.

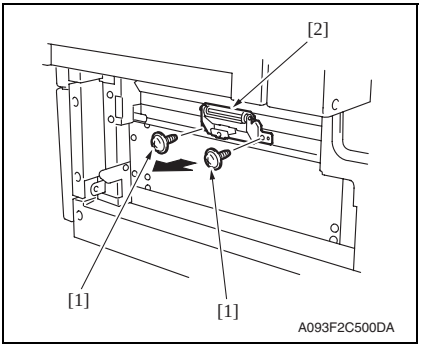

2. Remove two screws [1] and separation roller mounting bracket assy [2].

3. Using a cleaning pad dampened with alcohol, wipe the pick-up roller [1] clean of dirt.

4.4.4 Vertical transport roller

1. Open the right door.

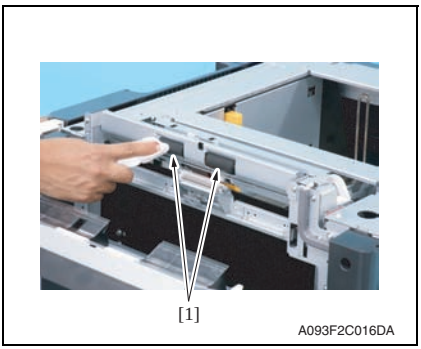

2. Using a cleaning pad dampened with alcohol, wipe the vertical transport roller [1] clean of dirt.

Adjustment/Setting

5. How to use the adjustment section

- "Adjustment/Setting" contains detailed information on the adjustment items and procedures for this machine.
- Throughout this "Adjustment/Setting," the default settings are indicated by " ".

Advance checks

Before attempting to solve the customer problem, the following advance checks must be made. Check to see if:

- The power supply voltage meets the specifications.
- The power supply is properly grounded.
- The machine shares the power supply with any other machine that draws large current intermittently (e.g., elevator and air conditioner that generate electric noise).
- The installation site is environmentally appropriate: high temperature, high humidity, direct sunlight, ventilation, etc.; levelness of the installation site.
- The defective image attributes to the data itself which is sent from the PC to the printer.
- The density is properly selected.
- Correct paper is being used for printing.
- The units, parts, and supplies used for printing (developer, PC drum, etc.) are properly replenished and replaced when they reach the end of their useful service life.
- Toner is not running out.

⚠ CAUTION

- **Be sure to unplug the power cord of the machine before starting the service job procedures.**
- **If it is unavoidably necessary to service the machine with its power turned ON, use utmost care not to be caught in the scanner cables or gears of the exposure unit.**
- **Special care should be used when handling the fusing unit which can be extremely hot.**
- **The developing unit has a strong magnetic field. Keep watches and measuring instruments away from it.**
- **Take care not to damage the PC drum with a tool or similar device.**
- **Do not touch IC pins with bare hands.**

6. Sensor check

6.1 Check procedure

A. Procedure

1. Call the Service Mode to the screen.
   See P.228 of the main body service manual.
2. Click [State Confirmation].
3. Click [Sensor Check].
4. Click [▼] once.

6.1.1 Sensor check screen

- This is only typical screen which may be different from what are shown on each individual main body.

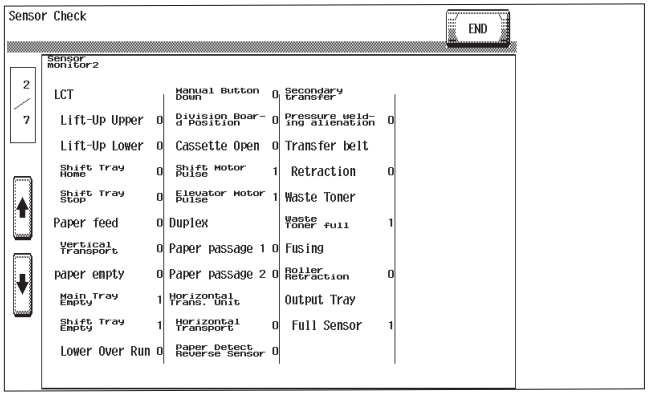

A093F3E010DA

6.1.2 Sensor check list

A. Sensor monitor 2

Symbol	Panel display	Part/Signal name	Operation characteristics/ panel display	
			1	0
PS4	Lift-Up Upper	Lift-up upper sensor	Raised Position	Not raised
PS13	Lift-Up Lower	Lift-up lower sensor	Lowered Position	Not lowered
PS12	Shift Tray Home	Shift tray home sensor	At home	Not at home
PS11	Shift Tray Stop	Shift tray stop sensor	Return position	Not at return position
PS1	Paper feed	Paper feed sensor	Paper present	Paper not present
PS2	Vertical Transport	Vertical transport sensor	Paper present	Paper not present
PS3	Paper empty	Paper empty sensor	Paper present	Paper not present
MTPEB	Main Tray Empty	Main tray paper empty board	Paper present	Paper not present
PS9	Shift Tray Empty	Shift tray empty sensor	Paper present	Paper not present
PS7	Lower Over Run	Lower over run sensor	malfunction	operational
MDCB	Manual Button Down	Manual down control board	ON	OFF
PS14	Division Board Position	Division board position sensor	At home	Not at home
PS6	Cassette Open	Cassette open sensor	Set	Out of position
PS8	Shift Motor Pulse	Shift motor pulse sensor	Blocked	Unblocked
PS10	Elevator Motor Pulse	Elevator motor pulse sensor	Blocked	Unblocked

7. Mechanical adjustment

7.1 Adjusting the paper reference position

NOTE

- **Make this adjustment after any of the following procedures has been performed.**
  When the PH unit has been replaced.
  When the image on the print is offset in the sub scan direction.
  When a faint image occurs on the leading edge of the image.

7.1.1 Centering

A. Control panel

1. Call the Service Mode to the screen.
   See P.228 of the main body service manual.
2. Select [MachineAdjustment] → [Printer Area] → [Centering] → [Tray 3].
3. Press the Menu/Select key.
4. Select [Print] and press the Menu/Select key to let the machine produce a test print.

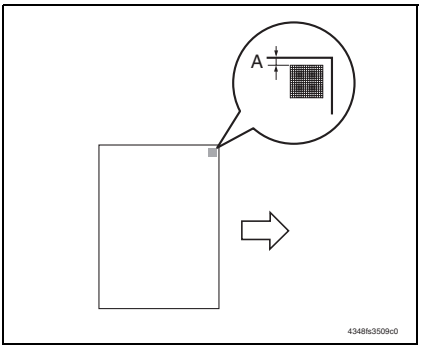

5. Measure the width of printed reference line A.
   Specification: 3.0 mm ± 1.0 mm
6. If the measured width A falls outside the specified range, enter the correction value using the ▲ or ▼ keys.
7. Produce another test print and check to see if width A falls within the specified range.

NOTE

- **If the use of the ▲ or ▼ keys does not allow the measurement to fall within the specified range, perform the following steps.**

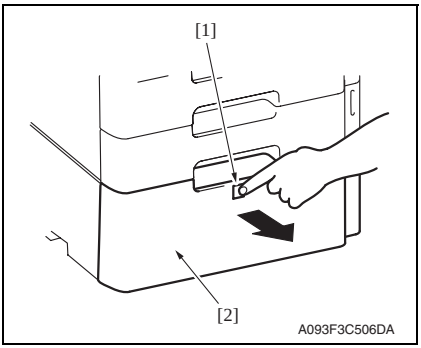

8. Press the drawer release button [1] and then slide out the drawer [2] from the paper feed cabinet.

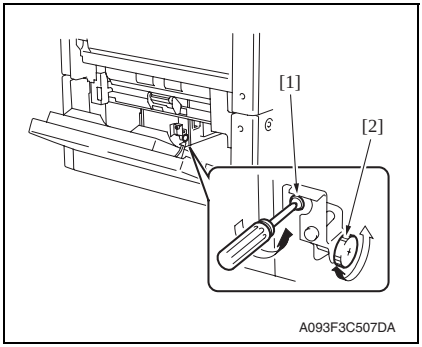

9. Open the right door.
10. Loosen the adjustment screw [1] and turn screw D [2] to make the adjustment.

NOTE

- **Do not damage the passage surface of the right door.**

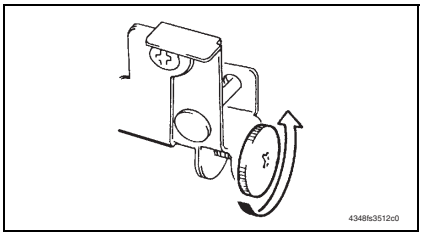

- If width A is greater than the specified value:
  Turn screw D counterclockwise.

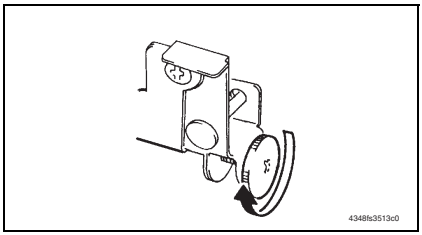

- If width A is smaller than the specified value:
  Turn screw D clockwise.

11. Perform another test print and check the reference deviation.
12. Repeat the adjustment until the reference line falls within the specified range.
13. Tighten the adjustment screw.
14. Press the Menu/Select key.
15. Turn OFF the power switch, then wait for 10 sec. or more and turn ON the power switch.

B. Jig software

1. Call the Service Mode to the screen.
See P.228 of the main body service manual.
2. Click [Machine] → [Printer Area].
3. Select [Centering] → [3rd.].

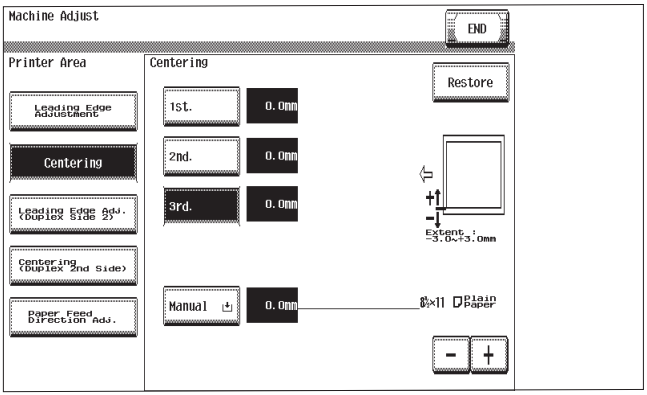

A093F3E011DA

4. Click the Start key to let the machine produce a test print.

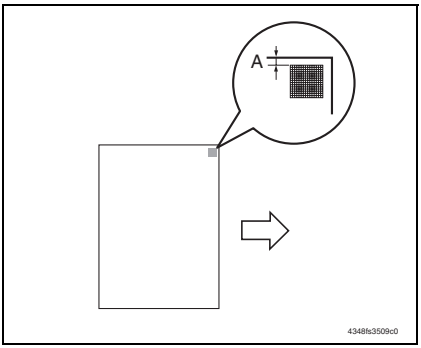

5. Measure the width of printed reference line A.
Specification: 3.0 mm ± 1.0 mm
6. If the measured width A falls outside the specified range, enter the correction value using the [-] or [+] key.
7. Produce another test print and check to see if width A falls within the specified range.

NOTE

- **If the use of the [-] or [+] key does not allow the measurement to fall within the specified range, perform the following steps.**

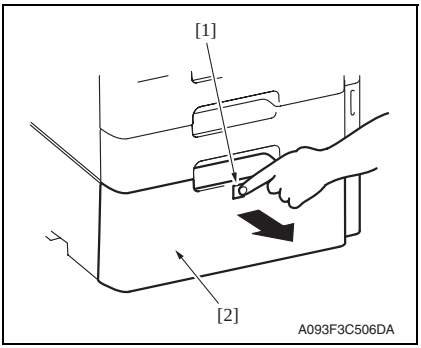

A093F3C506DA

8. Press the drawer release button [1] and then slide out the drawer [2] from the paper feed cabinet.

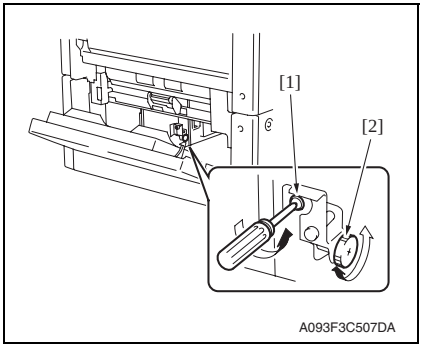

9. Open the right door.
10. Loosen the adjustment screw [1] and turn screw D [2] to make the adjustment.

NOTE

- **Do not damage the passage surface of the right door.**

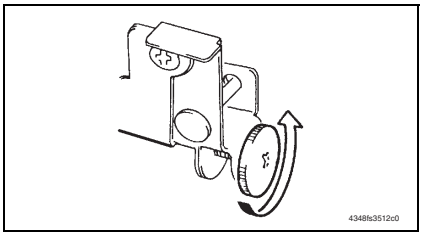

- If width A is greater than the specified value:
  Turn screw D counterclockwise.

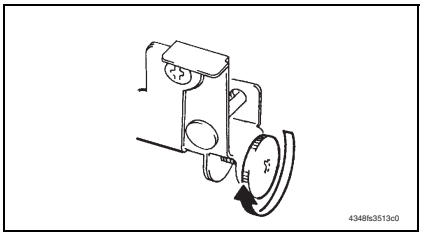

- If width A is smaller than the specified value:
  Turn screw D clockwise.

11. Perform another test print and check the reference deviation.
12. Repeat the adjustment until the reference line falls within the specified range.
13. Tighten the adjustment screw.
14. Click [END].
15. Click [Exit] on the Service Mode screen.
16. Turn OFF the power switch, then wait for 10 sec. or more and turn ON the power switch.

7.1.2 Centering (Duplex)

A. Control panel

1. Call the Service Mode to the screen.
See P.228 of the main body service manual.
2. Select [MachineAdjustment] → [Printer Area] → [Centering(Duplex)] → [Tray 3].
3. Press the Menu/Select key
4. Select [Print] and press the Menu/Select key to let the machine produce a test print.

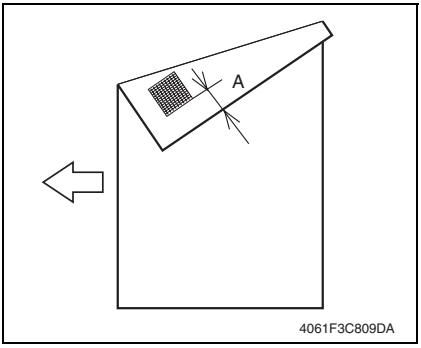

5. Measure the width of printed reference line A.
Specification: 3.0 mm ± 2.0 mm
6. If the measured width A falls outside the specified range, enter the correction value using the ▲ or ▼ keys.
7. Produce another test print and check to see if width A falls within the specified range.

8. Press the Menu/Select key.
9. Turn OFF the power switch, then wait for 10 sec. or more and turn ON the power switch.

B. Jig software

1. Call the Service Mode to the screen.
See P.228 of the main body service manual.
2. Click [Machine] → [Printer Area].
3. Select [Centering (Duplex 2nd Side] → [3rd.].

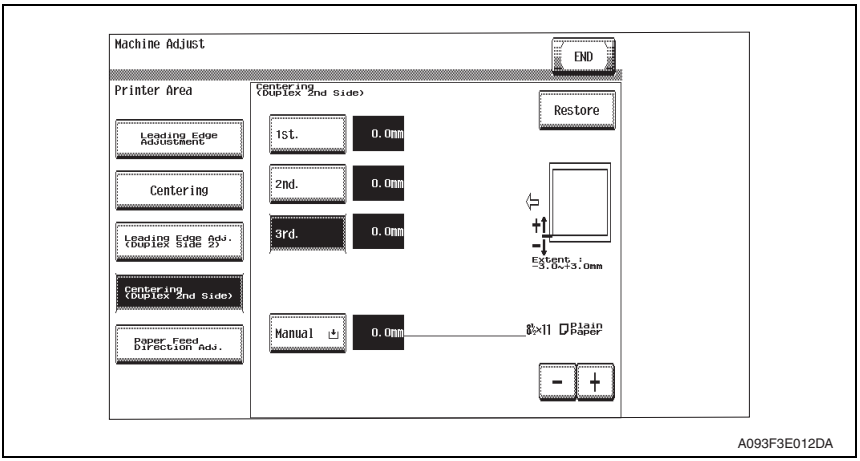

4. Click the Start key to let the machine produce a test print.

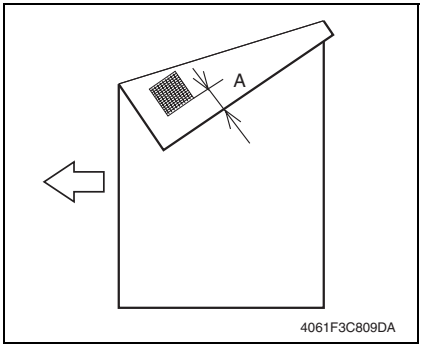

5. Measure the width of printed reference line A.
   Specification: 3.0 mm ± 2.0 mm
6. If the measured width A falls outside the specified range, enter the correction value using the [-] or [+] key.
7. Produce another test print and check to see if width A falls within the specified range.
8. Click [END].
9. Click [Exit] on the Service Mode screen.
10. Turn OFF the power switch, then wait for 10 sec. or more and turn ON the power switch.

7.2 Shifter movement timing belt adjustment

1. Remove the drawer.
See P.13

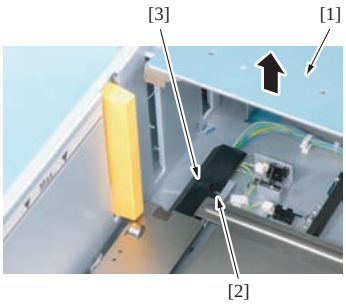

2. While raising the main tray [1], remove the screw [2] and the connector cover [3].

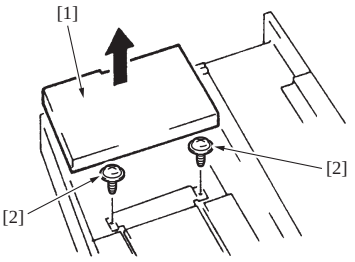

3. While raising the main tray [1], remove two screws [2] that hold the shift tray in position.

NOTE

- **When reinstalling, use caution because the wire of the main tray [1] comes off easily.**

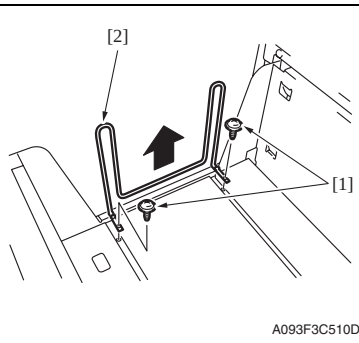

4. Remove two screws [1] and remove the shifter [2].

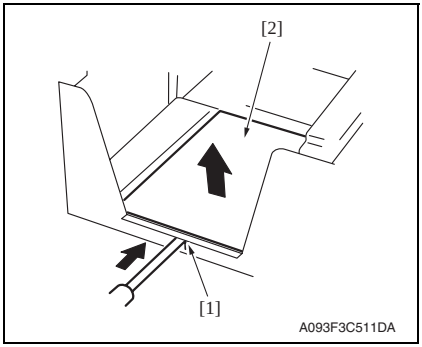

5. Push the tab [1] of the shift tray [2] as shown on the left and release the lock.
6. Remove the shift tray [2].

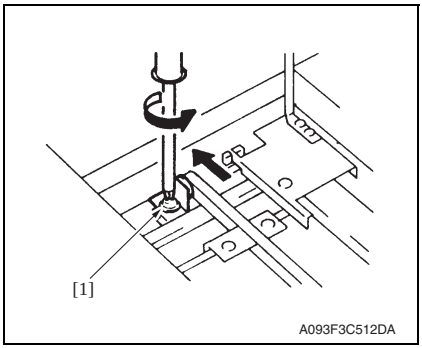

7. Loosen the screw [1] fixing the tension pulley assy as shown on the left and move it in the direction of the arrow.
8. After moving the shifter, tighten the fixing screw [1].

Blank Page

Troubleshooting

8. Jam display

8.1 Misfeed display

- When a paper misfeed occurs, the LED line lights up red steadily and the misfeed message is displayed on the control panel of the machine.

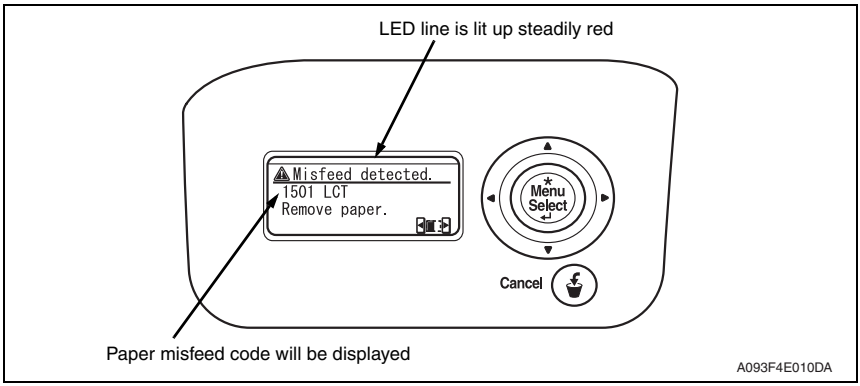

Code	Misfeed location	Misfeed access location	Action
1501	LCT paper feed section	Right door	P.36
2001	LCT paper vertical transport section	Vertical transport door	

8.1.1 Misfeed display resetting procedure

- Open the corresponding door, clear the sheet of paper misfed, and close the door.

8.2 Sensor layout

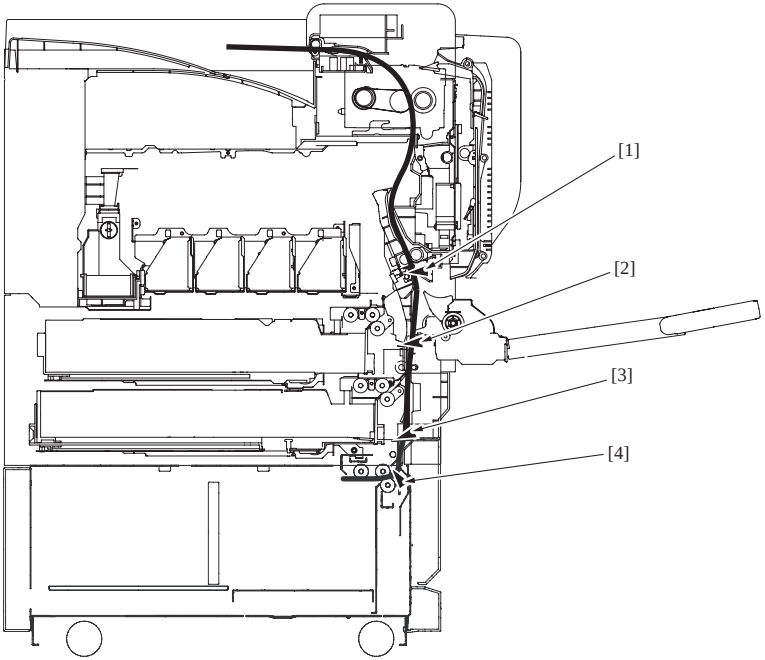

[1]	Sensor in front of tim. roller	PS23	[3]	Vertical transport sensor	PS2
[2]	Paper feed tray 2 vertical transport sensor	PS16	[4]	Paper feed sensor	PS1

8.3 Solution

8.3.1 Initial check items

- When a paper misfeed occurs, first perform the following initial check items.

Check item	Action
Does paper meet product specifications?	Replace paper.
Is the paper curled, wavy, or damp?	Replace paper. Instruct the user on the correct paper storage procedures.
Is a foreign object present along the paper path, or is the paper path deformed or worn?	Clean the paper path and replace if necessary.
Are rolls/rollers dirty, deformed, or worn?	Clean or replace the defective roll/roller.
Are the edge guide and trailing edge stop at the correct position to accommodate the paper?	Set as necessary.
Are the actuators operating correctly?	Correct or replace the defective actuator.

8.3.2 LCT paper feed section/vertical transport section misfeed

A. Detection timing

Type	Description
LCT paper feed section misfeed detection	The leading edge of the paper does not block the paper feed sensor (PS1) or the vertical transport sensor (PS2) even after the set period of time has elapsed after the paper feed motor (M1) is energized.
LCT vertical transport section misfeed detection	The paper feed tray 2 vertical transport sensor (PS16) is not blocked even after the lapse of a given period of time after the vertical transport sensor (PS2) has been blocked by a paper.
LCT vertical transport section loop registration reversing jam	Rise timing of load for registration is earlier than the one for making the loop at front of the timing roller at LCT paper feed.
LCT detection of paper remaining	The vertical transport sensor (PS2) is blocked when the power switch is set to ON, a door or cover is opened and closed, or a misfeed or malfunction is reset.
	The paper feed sensor (PS1) is blocked when the power switch is set to ON, a door or cover is opened and closed, or a misfeed or malfunction is reset.
Misfeed detected as a result of delayed deactivation of sensor	The paper feed sensor (PS1) is not unblocked even after the lapse of a given period of time after PS1 has been blocked by a paper.
	The vertical transport sensor (PS2) is not unblocked even after the lapse of a given period of time after PS2 has been blocked by a paper.

B. Action

Relevant electrical parts	
Paper feed sensor (PS1) Vertical transport sensor (PS2) Paper feed tray 2 vertical transport sensor (PS16) Paper feed motor (M1) Sensor in front of tim. roller (PS23)	PC control board (PCCB) MFP board (MFPB)

Step	Action	WIRING DIAGRAM	
		Control signal	Location (Electrical components)
1	Initial check items	—	—
2	PS23 I/O check, sensor check	PRCB CN1PRCB-3 (ON)	bizhub C353P D-18
3	PS1 I/O check, sensor check	PCCB PJ5PCCB-2 (ON)	PC-405 F-9
4	PS2 I/O check, sensor check	PCCB PJ5PCCB-5 (ON)	PC-405 F-9
5	PS16 I/O check, sensor check	PRCB CN9PRCB-11 (ON)	bizhub C353P D-10
6	M1 operation check	PCCB PJ6PCCB-1 to 4	PC-405 F-10
7	PCCB replacement	—	—
8	MFPB replacement	—	—

9. Trouble code

9.1 Trouble code display

- The machine's CPU performs a self-diagnostics function that, on detecting a malfunction, displays the corresponding malfunction code on the control panel.

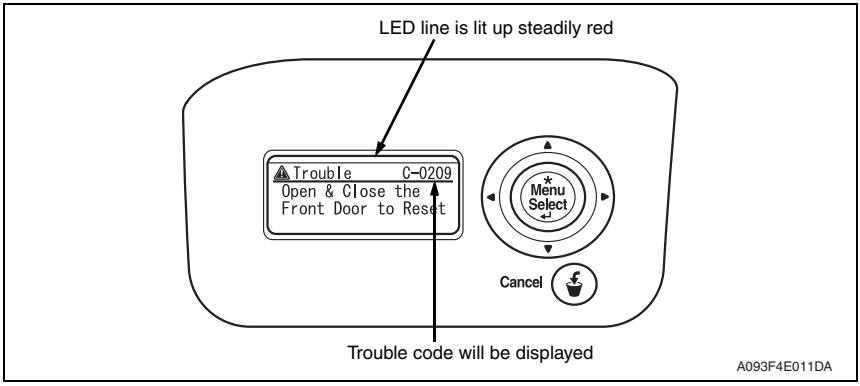

9.2 Trouble code list

Code	Item	Description
C0001	LCT communication error	• Due to a software malfunction, etc., the time on the watchdog timer has run out and a reset is performed.
C0209	LCT elevator motor failure	• The elevator motor pulse sensor (PS10) cannot detect both edges of H/L even after the set period of time has elapsed while the elevator motor (M5) is turning backward/forward (raise/lower).
C0210	LCT lift failure	• The lift-up upper sensor (PS4) is not blocked even after the set period of time has elapsed after the paper lift-up operation began. • The lift-up upper sensor (PS4) is not blocked even after the set pulse is detected by the elevator motor pulse sensor (PS10) after the paper lift-up operation began. • The lift-up lower sensor (PS13) is not unblocked even after the set pulse is detected by the elevator motor pulse sensor (PS10) after the paper lift-up operation began. • The lift-up upper sensor (PS4) is not blocked even after the set period of time has elapsed after the paper lift-up operating. • The lift-up lower sensor (PS13) is not blocked even after the set period of time has elapsed after the paper lift-down operation began. • The lift-up lower sensor (PS13) is not blocked even after the set pulse is detected by the elevator motor pulse sensor (PS10) after the paper lift-down operation began. • The lift-up upper sensor (PS4) is not unblocked even after the set pulse is detected by the elevator motor pulse sensor (PS10) after the paper lift-down operation began. • The lower over run sensor (PS7) is blocked while the paper lift-down operating.
C0212	LCT ejection failure	• The drawer cannot be determined to be out of position even after the set period of time has elapsed after the tray lock solenoid (SD1) is energized after the lowering operation is finished.
C0213	LCT shift gate malfunction	• The division board position sensor (PS14) cannot be set to L even after the set period of time has elapsed after the operation of the division board position motor (M3) began with the division board position sensor (PS14) set to L.

Code	Item	Description
C0214	LCT shifting failure	• The shift tray stop sensor (PS11) is not blocked even after the set period of time has elapsed after the shift operation began (shift to the right). • The shift tray stop sensor (PS11) is not blocked even after the set pulse is detected by the shift motor pulse sensor (PS8) after the shift operation began (shift to the right). • The shift tray home sensor (PS12) is not unblocked even after the set pulse is detected by the shift motor pulse sensor (PS8) after the shift operation began (shift to the right). • The shift tray home sensor (PS12) is not blocked even after the set period of time has elapsed after the return operation began (shift to the left). • The shift tray home sensor (PS12) is not blocked even after the set pulse is detected by the shift motor pulse sensor (PS8) after the return operation began (shift to the left). • The shift tray stop sensor (PS11) is not unblocked even after the set pulse is detected by the shift motor pulse sensor (PS8) after the return operation began (shift to the left).
C0215	LCT shift motor malfunction	• The shift motor pulse sensor (PS8) cannot detect both edges of H/L even after the set period of time has elapsed while the shift motor (M4) is turning backward/ forward (raise/lower).

- Open and close the front door, or turn OFF the power switch. Then, wait for 10 sec. or more and turn ON the power switch to reset the malfunction display.

9.3 Solution

9.3.1 C0001: LCT communication error

Relevant electrical parts	
PC control board (PCCB)	

Step	Action	WIRING DIAGRAM	
		Control signal	Location (Electrical components)
1	Turn OFF the power switch, wait for 10 sec. or more, and turn ON the power switch.	—	—
2	PCCB replacement	—	—

9.3.2 C0209: LCT elevator motor failure

Relevant electrical parts	
Elevator motor (M5) Elevator motor pulse sensor (PS10)	Relay board (REYB) PC control board (PCCB)

Step	Action	WIRING DIAGRAM	
		Control signal	Location (Electrical components)
1	Check the motor and sensor connectors for proper connection, and correct as necessary.	—	—
2	Check the connector of motor for proper drive coupling, and correct as necessary.	—	—
3	PS10 I/O check, sensor check	REYB PJ2REYB<A>-5 (ON)	PC-405 K-5
4	M5 operation check	REYB PJ2REYB<B>-6 to 7	PC-405 K-6 to 7
5	REYB replacement	—	—
6	PCCB replacement	—	—

9.3.3 C0210: LCT lift failure

Relevant electrical parts	
Lift-up upper sensor (PS4) Lift-up lower sensor (PS13) Elevator motor pulse sensor (PS10) Lower over run sensor (PS7)	PC control board (PCCB)

Step	Action	WIRING DIAGRAM	
		Control signal	Location (Electrical components)
1	Check the sensor connectors for proper connection, and correct as necessary.	—	—
2	PS4 I/O check, sensor check	PCCB PJ5PCCB-12 (ON)	PC-405 F-8
3	PS13 I/O check, sensor check	REYB PJ2REYB<A>-9 (ON)	PC-405 K-3
4	PS10 I/O check, sensor check	REYB PJ2REYB<A>-5 (ON)	PC-405 K-5
5	PS7 I/O check, sensor check	REYB PJ2REYB<A>-2 (ON)	PC-405 K-6
6	PCCB replacement	—	—

9.3.4 C0212: LCT lock release failure

Relevant electrical parts	
Tray lock solenoid (SD1)	PC control board (PCCB)

Step	Action	WIRING DIAGRAM	
		Control signal	Location (Electrical components)
1	Check the SD1 connector for proper connection, and correct as necessary.	—	—
2	SD1 operation check	PCCB PJ7PCCB-4 (ON)	PC-405 F-10
3	PCCB replacement	—	—

9.3.5 C0213: LCT shift gate operation failure

Relevant electrical parts	
Division board position sensor (PS14) Division board position motor (M3)	PC control board (PCCB)

Step	Action	WIRING DIAGRAM	
		Control signal	Location (Electrical components)
1	Check the motor and sensor connectors for proper connection, and correct as necessary.	—	—
2	Check the connector of motor for proper drive coupling, and correct as necessary.	—	—
3	PS14 I/O check, sensor check	REYB PJ2REYB<B>-1 (ON)	PC-405 K-7
4	M3 operation check	REYB PJ2REYB<B>-2 to 3	PC-405 K-7
5	PCCB replacement	—	—

9.3.6 C0214: LCT shift failure

Relevant electrical parts	
Shift motor pulse sensor (PS8) Shift tray stop sensor (PS11) Shift tray home sensor (PS12)	PC control board (PCCB)

Step	Action	WIRING DIAGRAM	
		Control signal	Location (Electrical components)
1	Check the sensor connectors for proper connection, and correct as necessary.	—	—
2	PS8 I/O check, sensor check	REYB PJ2REYB<A>-3 (ON)	PC-405 K-6
3	PS11 I/O check, sensor check	REYB PJ2REYB<A>-7 (ON)	PC-405 K-4
4	PS12 I/O check, sensor check	REYB PJ2REYB<A>-8 (ON)	PC-405 K-4
5	PCCB replacement	—	—

9.3.7 C0215: LCT shift motor failure

Relevant electrical parts	
Shift motor (M4) Shift motor pulse sensor (PS8)	PC control board (PCCB)

Step	Action	WIRING DIAGRAM	
		Control signal	Location (Electrical components)
1	Check the motor and sensor connectors for proper connection, and correct as necessary.	—	—
2	Check the connector of motor for proper drive coupling, and correct as necessary.	—	—
3	PS8 I/O check, sensor check	REYB PJ2REYB<A>-3 (ON)	PC-405 K-6
4	M4 operation check	REYB PJ2REYB<B>-4 to 5	PC-405 K-7
5	PCCB replacement	—	—

Blank Page

KONICA MINOLTA

SERVICE MANUAL

FIELD SERVICE

FS-519/PK-515 /OT-602

Revision history

After publication of this service manual, the parts and mechanism may be subject to change for improvement of their performance.
Therefore, the descriptions given in this service manual may not coincide with the actual machine.

When any change has been made to the descriptions in the service manual, a revised version will be issued with a revision mark added as required.

Revision mark:

- To indicate clearly a section revised, show △1 to the left of the revised section.
  A number within △1 represents the number of times the revision has been made.

- To indicate clearly a section revised, show ▲1 in the lower outside section of the corresponding page.
  A number within ▲1 represents the number of times the revision has been made.

NOTE

Revision marks shown in a page are restricted only to the latest ones with the old ones deleted.

- When a page revised in Ver. 2.0 has been changed in Ver. 3.0:
  The revision marks for Ver. 3.0 only are shown with those for Ver. 2.0 deleted.
- When a page revised in Ver. 2.0 has not been changed in Ver. 3.0:
  The revision marks for Ver. 2.0 are left as they are.

Date	Service manual Ver.	Revision mark	Descriptions of revision
2007/11	2.0	△1	Error correction
2007/10	1.0	—	Issue of the first edition

CONTENTS

FS-519/PK-515/OT-602

General

1. Product specifications 1
1.1 FS-519 1
1.2 PK-515 4
1.3 OT-602 5
2. Paper feed path 7
2.1 Feeding paper to the 1st exit tray 7
2.2 Feeding paper to the 2nd exit tray 7
2.3 Feeding paper to the 2nd exit tray (When OT-602 is mounted) 8

Maintenance

3. Periodical check 9
3.1 Maintenance procedure (Periodical check parts) 9
3.1.1 Replacing the paddles 9
3.1.2 Replacing the cleaning pad 12
3.1.3 Lubricating the worm gear and replacing the cover film 13
3.1.4 Cleaning of the rollers and rolls 16
3.1.5 Cleaning of the paddles 18
4. Other 19
4.1 Disassembly/adjustment prohibited items 19
4.2 Precautions to be observed when option configuration is changed 20
4.2.1 Setting the exit tray detection position 20
4.3 Disassembly/Assembly/Cleaning list (Other parts) 21
4.3.1 Disassembly/Assembly parts list 21
4.4 Disassembly/Assembly procedure 22
4.4.1 Finisher unit right front cover 22
4.4.2 Finisher unit left front cover 22
4.4.3 Finisher unit rear cover 22
4.4.4 Finisher unit upper cover 23
4.4.5 Front door 23
4.4.6 Middle guide 24
4.4.7 Intake cover 25
4.4.8 Tray unit front cover/Tray unit rear cover/Connector cover 25
4.4.9 Tray 1/Tray 2 26

4.4.10 Output tray (OT-602): Option ... 26
4.4.11 Tray unit ... 27
4.4.12 Finisher unit ... 30
4.4.13 Changing the height of the stand table ... 31
4.4.14 Height and angle adjustment of stand table ... 36
4.4.15 Stapler unit ... 38
4.4.16 Punch kit (PK-515): Option ... 39
4.4.17 Exit roller motor/Storage paddle drive clutch/Exit upper roller/ Storage paddle ... 40
4.4.18 Exit paddle drive clutch/Exit lower roller ... 45
4.4.19 Aligning section ... 48
4.4.20 Elevator motor/Timing belt ... 51
4.4.21 Shutter drive gear ... 57
4.4.22 Duplex guide solenoid ... 58
4.4.23 FS control board ... 60

Adjustment/Setting

5. How to use the adjustment section ... 61
6. Sensor Check ... 62
6.1 Check procedure ... 62
6.1.1 Sensor check screen ... 62
6.1.2 Sensor check list ... 63
7. Finisher operations ... 64
7.1 Entering Finisher ... 64
7.2 Finisher Check ... 64
7.3 Punch stop position adjustment (PK-515) ... 66
7.4 Punch loop length adjustment (PK-515) ... 68
7.4.1 Control panel ... 68
7.4.2 Jig Software ... 68
7.5 Punch Option ... 69
7.5.1 Punch Kit type ... 69
7.5.2 # of Punch-Holes ... 69
8. Mechanical adjustment ... 70
8.1 Punch hole deviance adjustment (PK-515) ... 70
8.2 Staple position adjustment ... 71
8.3 Staple home position sensor position adjustment ... 73
8.4 Adjustment of clearance between stapler and FD stopper ... 74

Troubleshooting

9. Jam display 75
9.1 Misfeed display 75
9.1.1 Misfeed display resetting procedure 75
9.2 Sensor layout 76
9.3 Solution 77
9.3.1 Initial check items 77
9.3.2 Solution when paper curl occurs 77
9.3.3 Transport section misfeed 78
9.3.4 Exit section misfeed 79
9.3.5 Finisher bundle exit misfeed 79
9.3.6 Finisher staple misfeed 80
9.3.7 Finisher punch misfeed (PK-515) 80
10. Malfunction code 81
10.1 Trouble code 81
10.2 Solution 83
10.2.1 C1004: FNS communication error 83
10.2.2 C1183: Elevator motor ascent/descent drive failure 83
10.2.3 C1190: Aligning plate 1 drive failure 84
10.2.4 C1191: Aligning plate 2 drive failure 84
10.2.5 C11A0: Paper holding drive failure 85
10.2.6 C11A1: Exit roller pressure/retraction failure 85
10.2.7 C11A3: Shutter drive failure 86
10.2.8 C11B0: Staple unit CD drive failure 86
10.2.9 C11B2: Staple drive failure 87
10.2.10 C11C0: Punch cam motor unit failure 87
10.2.11 C1301: Finishing option cooling fan motor failure 88
10.2.12 CC155: Finisher ROM failure 88

Blank Page

General

1. Product specifications

1.1 FS-519

A. Type

Name	Multi staple finisher built into the printer
Installation	Installed in the printer
Document alignment	Center
Consumables	Staples

B. Functions

Modes	Sort, group, sort offset, group offset, sort stable, and punch (when PK-515 is mounted)

C. Paper

(1) Non sort/sort/group

Type	Size	Weight	Max. capacity		
Plain paper Recycled paper	A6S, A5S/A5, B5S/B5, B6S, A4S/A4, B4, A3, A3Wide 5-1/2 x 8-1/2S/5-1/2 x 8-1/2, 8-1/2 x 11S/8-1/2 x 11, 8-1/2 x 14, 11 x 17, 12-1/4 x 18 Max. 311.15 mm x 457.2 mm 12.25 x 18 inch Min. 90 mm x 139.7 mm 3.5 x 5.5 inch	60 to 90 g/m² 16 to 24 lb	Exit tray1	200 sheets	
			Exit tray2	A4S, 8-1/2 x 11S or less	1000 sheets
				B4, 8-1/2 x 14 or greater	500 sheets
Government standard postcards		91 to 210 g/m² 24.25 to 55.75 lb	20 sheets		
Envelope		—			
OHP transparencies		—			
Translucent paper		—			
Label		—			
Thick paper 1		91 to 150 g/m² 24.25 to 40 lb			
Thick paper 2		151 to 209 g/m² 40.25 to 55.5 lb			
Thick paper 3		210 to 256 g/m² 55.75 to 68 lb			
Thick paper 4		257 to 271 g/m² 68.25 to 72 lb			
Long size paper *	210 mm to 297 mm x 457.2 mm to 1200 mm	127 to 160 g/m² 33.75 to 42.5 lb	—		

*: Long size paper is available only for non-sort mode.

(2) Sort offset/group offset

Type	Size	Weight	Max. capacity		
Plain paper Recycled paper	A5, B5S/B5, A4S/A4, B4, A3 8-1/2 x 11S/8-1/2 x 11, 8-1/2 x 14, 11 x 17 Max. 297 mm x 431.8 mm 11.75 x 17 inch Min. 182 mm x 148.5 mm 7.25 x 5.75 inch	60 to 90 g/m² 16 to 24 lb	Exit tray1	200 sheets	
			Exit tray2	A4S, 8-1/2 x 11S or less	1000 sheets
				B4, 8-1/2 x 14 or greater	500 sheets
Thick paper		91 to 271 g/m² 24.25 to 72 lb	—		

(3) Sort staple

Type	Size	Weight	Max. capacity			No. of sheets to be stapled
Plain paper Recycled paper	A5, B5S/B5, A4S/A4, B4, A3 8-1/2 x 11S/8-1/2 x 11, 8-1/2 x 14, 11 x 17 Max. 297 mm x 431.8 mm 11.75 x 17 inch Min. 182 mm x 148.5 mm 7.25 x 5.75 inch	60 to 90 g/m² 16 to 24 lb	Exit tray1	200 sheets		50 sheets*
			Exit tray2	A4S,8-1/2 x 11S or less	1000 sheets	
				B4, 8-1/2 x 14 or greater	500 sheets	
Thick paper		91 to 120 g/m² 24.25 to 32 lb	—			30 sheets
		121 to 209 g/m² 32.25 to 55.5 lb	—			15 sheets

*: The number of sheets to be stapled is limited for high-density images.
(Color wise: 20 sheets x 20 sets)

(4) Punch

Type	Size	Weight	Punched holes	Exit tray
Plain paper Recycled paper	B5S/B5 to A3 8-1/2 x 11S/8-1/2 x 11 to 11 x 17	60 to 256 g/m² 16 to 68 lb	2, 3, 4 *	Exit tray1 Exit tray2 OT-602 MT-502

*: The punched holes is different because of the difference of area.

D. Stapling

Staple filling mode	Dedicated staple cartridge (5000 staples)	
Staple detection	Available (Nearly Empty: 20 remaining staples)	
Stapling position	Back of the corner (30 degree)	A4, A3, B5, B4 8-1/2 x 11, 11 x 17
	Front of the corner (30 degree)	
	Back of the corner (Parallel)	A4S, B5S, A5 8-1/2 x 11S, 8-1/2 x 14
	Front of the corner (Parallel)	
	Side: Parallel 2 point	A4S/A4, A3, B5S/B5, B4, A5 8-1/2 x 11S/8-1/2 x 11, 8-1/2 x 14, 11 x 17
Manual staple	None	

E. Hole Punch

No. of holes	Metric: 4 holes, Inch: 2 holes/3 holes, Sweden: 4 holes
Punch dust full detection	Available

F. Machine specifications

Power requirements	DC 24 V (supplied from the main body)
	DC 5.1 V (supplied from the main body)
Max. power consumption	66 W or less
Dimensions	352 mm (W) x 558 mm (D) x 589 mm (H) 13.75 inch (W) x 22 inch (D) x 23.25 inch (H) 471 mm (W) x 558 mm (D) x 589 mm (H) *1 18.5 inch (W) x 22 inch (D) x 23.25 inch (H) *1
Weight	33.2 kg (73.25 lb)

*1: Size when the paper exit tray is pulled out

G. Operating environment

- Conforms to the operating environment of the main body.

1.2 PK-515

A. Type

Name	Punch kit PK-515	
Installation	Built into the finisher	
Paper size	Metric	B5S, A4, B4, A3
	Inch (2 holes)	8-1/2 x 11S/8-1/2 x 11, 8-1/2 x 14, 11 x 17
	Inch (3 holes)	8-1/2 x 11, 11 x 17
	Sweden	B5S, A4, B4, A3
Paper type	Plain paper (60 to 209 g/m², 16 to 55.5 lb) Thick paper 1/2/3 (91 to 256 g/m², 24.25 to 68 lb)	
Punch hole	Metric: 2 holes, 4 holes, Inch: 2/3 hole, Sweden: 4 holes	
Number of stored punch wastes	Metric (2 holes): For 2,500 sheets of paper (64 g/m²) Metric (4 holes): For 1,500 sheets of paper (80 g/m²) Inch (2/3 holes): For 1,000 sheets of paper (75 g/m²) Sweden (4 holes): For 1,500 sheets of paper (80 g/m²)	
Document alignment	Center	

B. Machine specifications

Power requirements	Supplied by the finisher
Dimensions	114 mm (W) x 461 mm (D) x 106 mm (H) 4.5 inch (W) x 18.25 inch (D) x 4.25 inch (H)
Weight	Approx. 1.9 kg (4.25 lb) or less

C. Operating environment

- Conforms to the operating environment of the main body.

1.3 OT-602

A. Type

Name	Output tray OT-602
Installation	Fixed to the finisher
Mode	Sort, group, and sort stable Sort, group, sort offset, group offset, and sort stable
Number of bins	1 bin
Document alignment	Center

B. Paper

Mode	Size	Type		Capacity
Sort/group	A6S, A5S/A5, B5S/B5, B6S, A4S/A4, B4, A3, A3Wide 5-1/2 x 8-1/2S/5-1/2 x 8-1/2, 8-1/2 x 11S/8-1/2 x 11, 8-1/2 x 14, 11 x 17 Max. 311.15 mm x 457.2 mm 12.25 x 18 inch Min. 90 mm x 139.7 mm 3.5 x 5.5 inch	Plain paper	60 to 90 g/m², 16 to 24 lb	200 sheets (up to a height of 24 mm)
		Recycled paper		
		Special	Government standard postcards	—
			Envelope	
			OHP transparencies	
			Translucent paper	
			Label	
		Thick paper	91 to 271 g/m² 24.25 to 72 lb	20 sheets
Sort offset/ group offset	A5, B5S/B5, A4S/A4, B4, A3 8-1/2 x 11S/8-1/2 x 11, 8-1/2 x 14, 11 x 17 Max. 297 mm x 431.8 mm 11.75 x 17 inch Min. 182 mm x 148.5 mm 7.25 x 5.75 inch	Plain paper	60 to 90 g/m², 16 to 24 lb	200 sheets (up to a height of 24 mm)
		Recycled paper		
		Thick paper	91 to 271 g/m² 24.25 to 72 lb	—
Sort stable		Plain paper	60 to 90 g/m², 16 to 24 lb	200 sheets or 20 prints (up to a height of 24 mm)
		Recycled paper		
		Thick paper	91 to 209 g/m² 24.25 to 55.5 lb	—

C. Machine specifications

Dimensions	282 mm (W) x 368 mm (D) x 57 mm (H) 11 inch (W) x 14.5 inch (D) x 2.25 inch (H)
Weight	0.7 kg (1.5 lb)

D. Operating environment

- Conforms to the operating environment of the main body.

NOTE

How product names appear in the document

- **FS-519: Finisher**
- **PK-515: Punch kit**
- **OT-602: Output tray**

2. Paper feed path

2.1 Feeding paper to the 1st exit tray

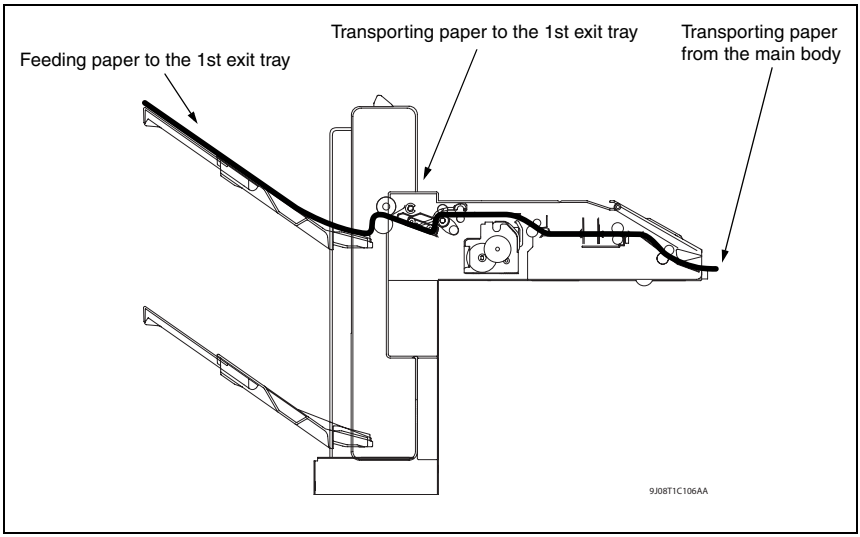

2.2 Feeding paper to the 2nd exit tray

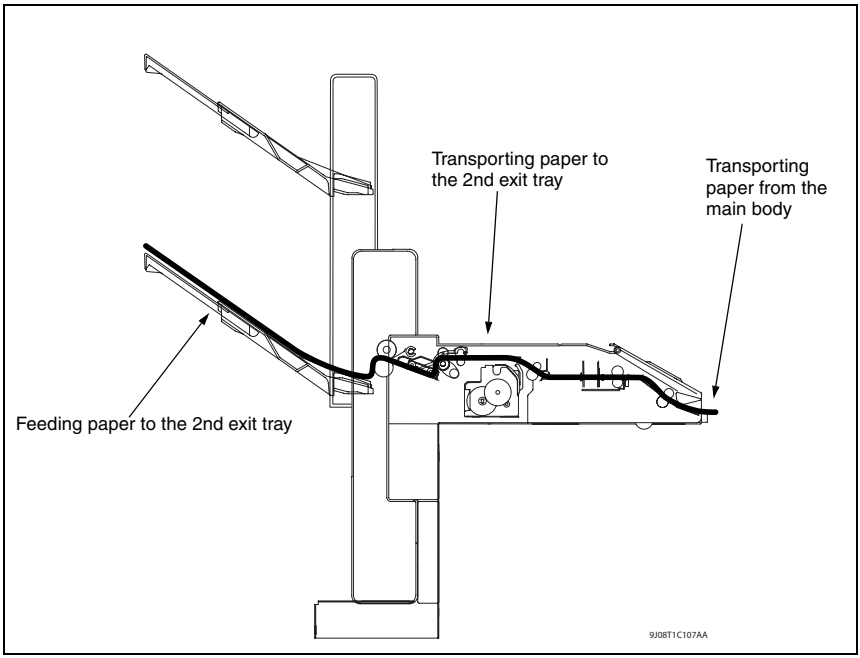

2.3 Feeding paper to the 2nd exit tray (When OT-602 is mounted)

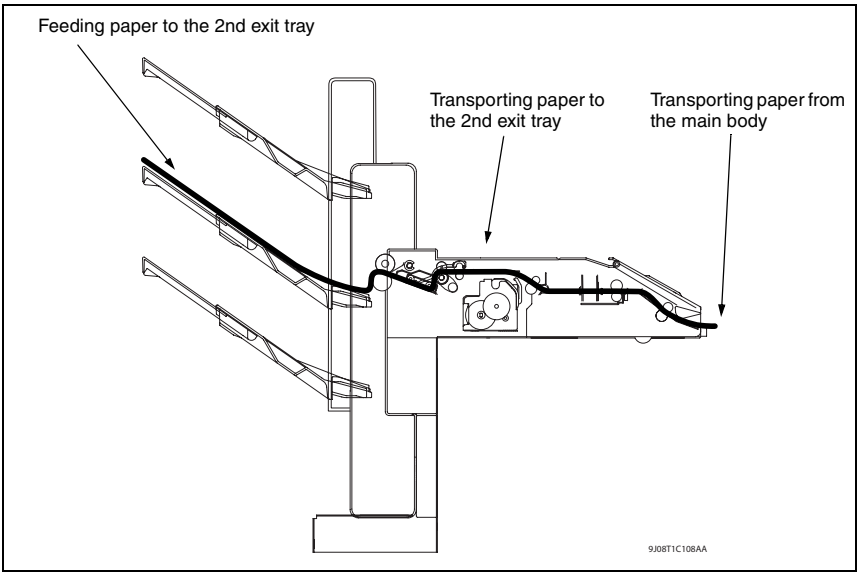

Maintenance

3. Periodical check

3.1 Maintenance procedure (Periodical check parts)

NOTE

- **The alcohol described in the cleaning procedure of maintenance represents the isopropyl alcohol.**

3.1.1 Replacing the paddles

A. Periodically replaced parts/cycle

- Paddles: Every 800,000 prints

B. Procedure

1. Remove the finisher unit.
See P.30

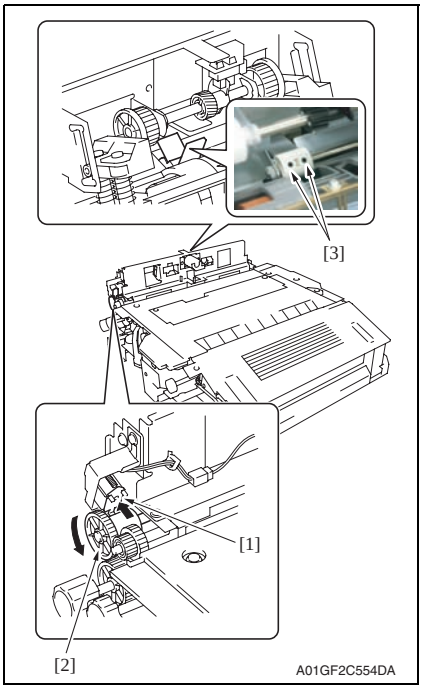

2. While pushing the plunger [1], turn the gear [2] in the direction of the arrow until the screws [3] appear as shown in the illustration.

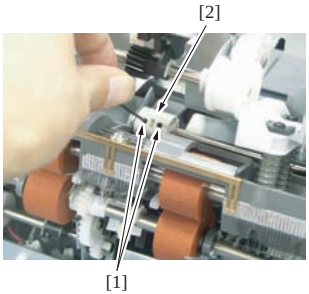

A01GF2C555DA

3. Loosen two screws [1] and remove the paddle holder assy [2].

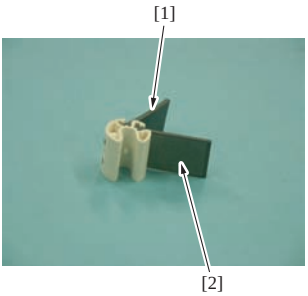

A01GF2C553DA

4. Remove two paddles [1] [2] and replace them with new ones.

NOTE

- **When installing new paddles, be sure to install the paddle covered with black film [1] and the paddle covered with transparent film [2] to their original position.**
- **If there is difficulty in installing the paddles, apply alcohol to the root of the paddles and install them.**

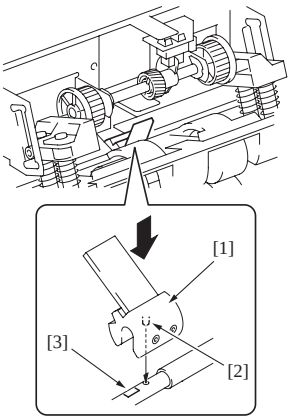

A01GF2C556DA

5. Install the paddle holder assy [1].

NOTE

- **To reinstall the paddle holder assy, place it where its locating pin [2] is aligned with the hole on the shaft. Attach the paddle holder assy onto the shaft by first pressing the assy on the side where the shaft has a depression [3].**

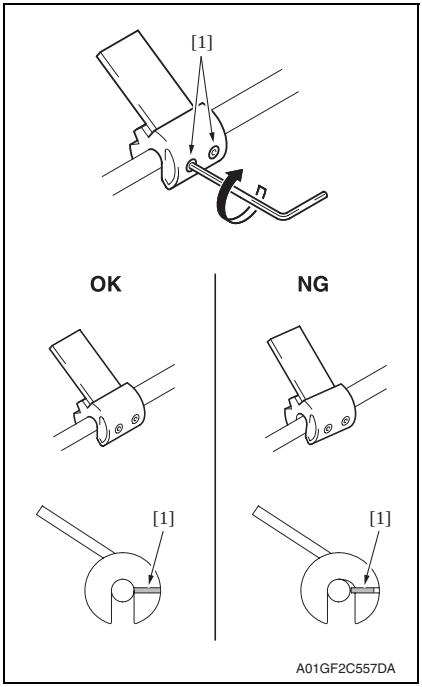

6. Secure the paddle holder assy by tightening two screws [1].

NOTE

- **When tightening the two set screws, lightly press the paddle so that it is fixed without any tilt.**
- **For proper set screw tightening to fix the paddle, turn each set screw only one quarter (1/4) of a turn after the set screw tip has reached the shaft.**

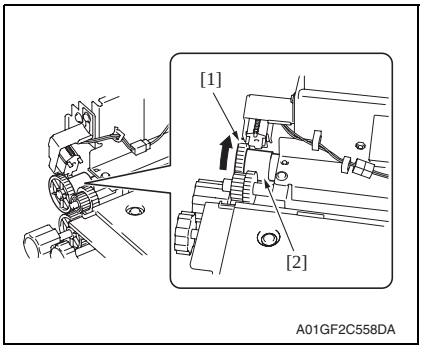

NOTE

- **After reinstalling the paddle holder assy, check to make sure that the collar [2] remains still when you are turning the gear [1].**

3.1.2 Replacing the cleaning pad

A. Periodically replaced parts/cycle

- Cleaning pad: Every 800,000 prints

B. Procedure

1. Remove the finisher unit.
See P.30

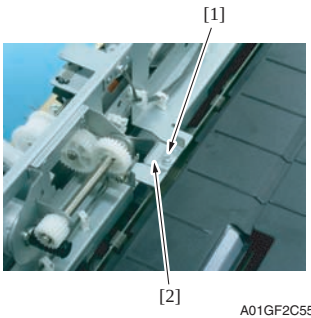

2. Remove the screw [1] and remove the cleaning pad [2].

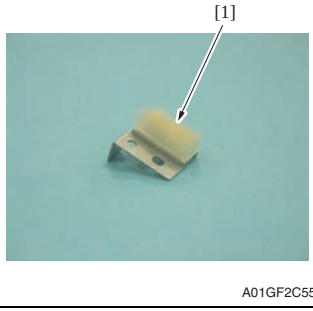

3. Peel off the cleaning pad [1].

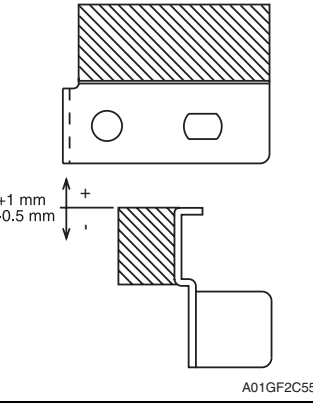

4. To reinstall, reverse the order of removal.

NOTE

- **Before attaching a new cleaning pad, clean the metal surface where the new cleaning pad is attached.**
- **Align the right ends of the new cleaning pad and the metal as shown in the illustration.**

3.1.3 Lubricating the worm gear and replacing the cover film

A. Periodically lubricated parts/cycle

- Worm gear: Every 800,000 prints

B. Periodically replaced parts/cycle

- Cover film: Every 800,000 prints

C. Procedure

NOTE

- **Before the following lubrication and replacement work, make sure to remove optional SD-505 and MT-502 when the finisher is equipped with these options.**

1. Turn the power switch ON. Then turn the power switch OFF when the tray reaches the lowest position during the initial operation.
2. Remove the tray unit rear cover.
See P.25

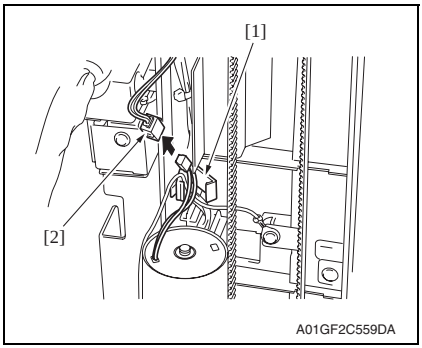

3. Remove the wire saddle [1] and disconnect the connector [2].

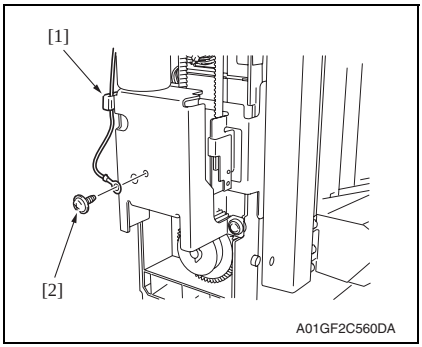

4. Remove the wire saddle [1] and the screw [2]. Remove the ground terminal.

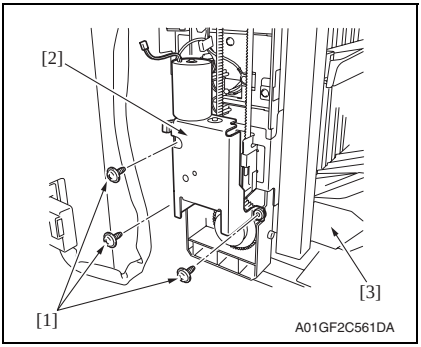

5. Remove three screws [1] and remove the elevator motor assy [2].

NOTE

- **Remove the elevator motor assy while holding the lower part of the tray [3] with your hand.**

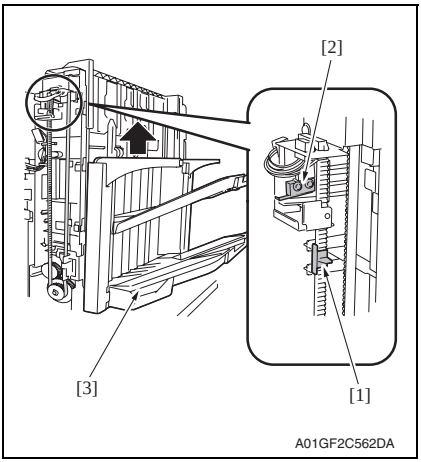

NOTE

- **Before reinstalling the elevator motor assy, raise the tray [3] until the lever [1] attached on the timing belt moves to the position lower than that of the sensor [2]. In that state, reinstall the elevator motor assy.**

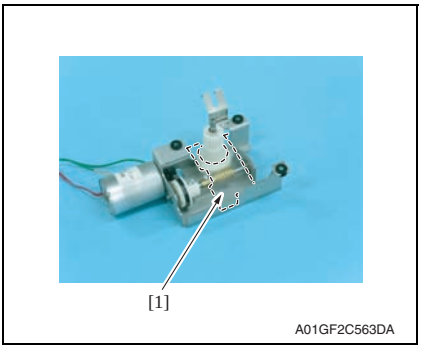

6. Remove the cover film [1] by peeling off its adhesive tape.

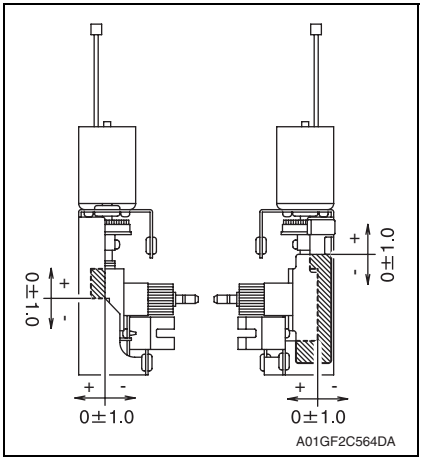

NOTE

- **Before attaching a new cover film, clean the metal surface where the new cover film is attached.**
- **Align the right ends of the new cover film and the metal as shown in the illustration.**

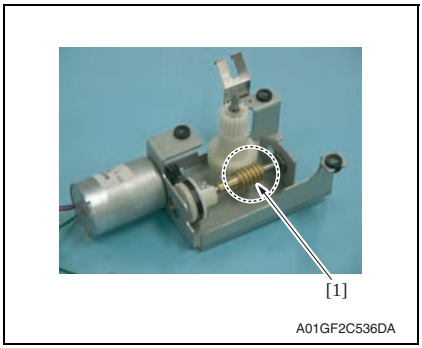

7. Apply the following grease to the worm gear [1].
Material: Molykote EM-50L grease
(No.: 4478 7801 ##)

8. To reinstall, reverse the order of removal.

3.1.4 Cleaning of the rollers and rolls

A. Periodically cleaning parts/cycle

- Rollers and rolls: Every 300,000 prints

B. Procedure

1. Remove the finisher unit.
See P.30
2. Remove the finisher unit upper cover.
See P.23

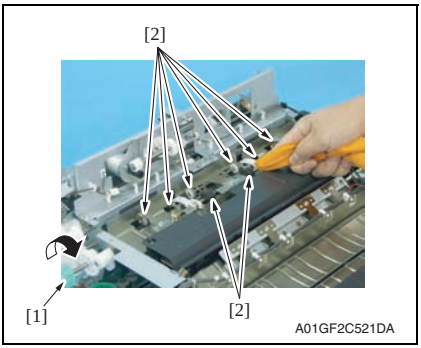

3. While turning processing knob FN5 [1], wipe the roller and roll [2] using a soft cloth dampened with alcohol.

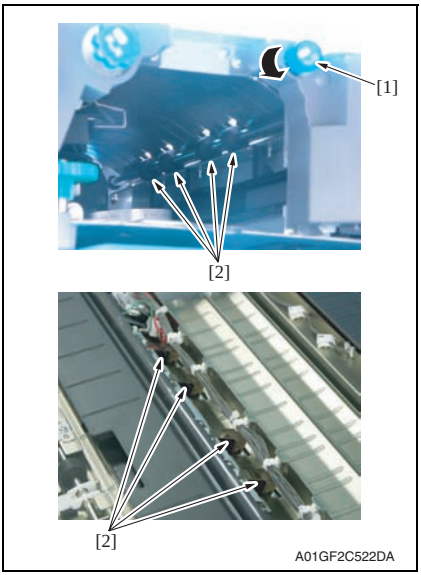

4. While turning processing knob FN4 [1], wipe the roller and roll [2] using a soft cloth dampened with alcohol.

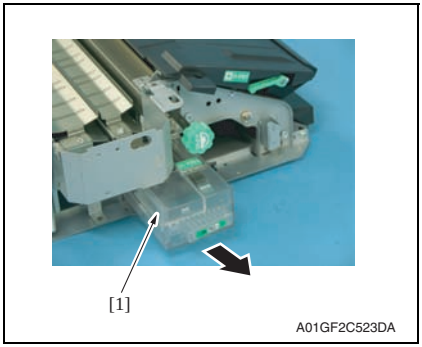

5. Remove punch waste storage box FN3.1 [1].
(only when PK-515 is installed)

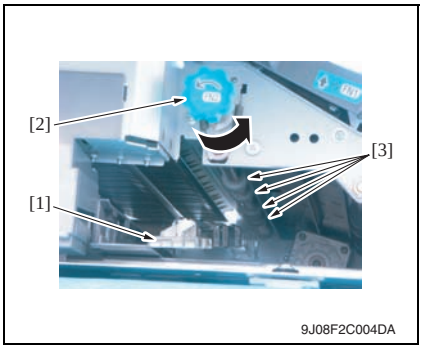

6. Lower processing guide FN3 [1].
7. While turning processing knob FN2 [2], wipe the roll [3] using a soft cloth dampened with alcohol.

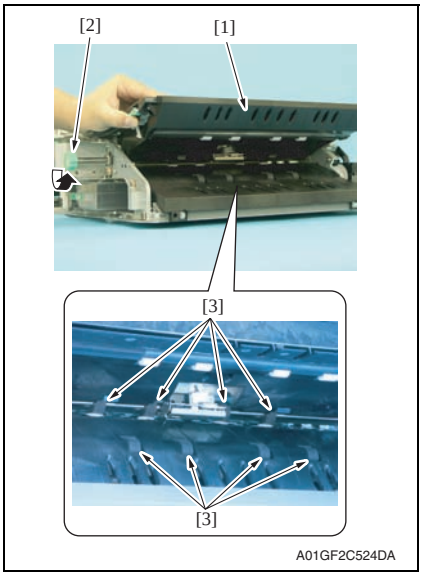

8. Upper processing guide FN1 [1].
9. While turning processing knob FN2 [2], wipe the roller [3] using a soft cloth dampened with alcohol.

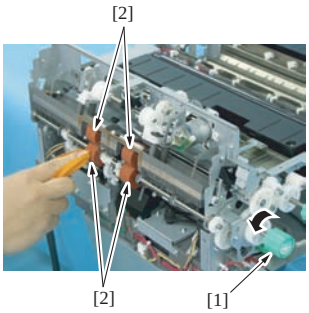

10. While turning processing knob FN6 [1], wipe the roller [2] using a soft cloth dampened with alcohol.

3.1.5 Cleaning of the paddles

A. Periodically cleaning parts/cycle

- Paddles: Every 300,000 prints

B. Procedure

1. Remove the finisher unit.
See P.30

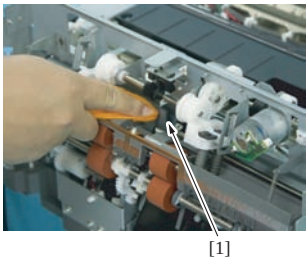

2. Using a soft cloth dampened with alcohol, wipe the paddle 1 [1].

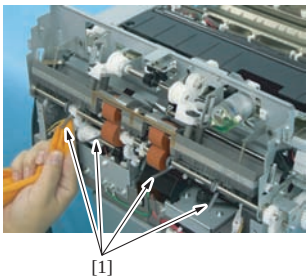

3. Using a soft cloth dampened with alcohol, wipe four paddles 2 [1].

4. Other

4.1 Disassembly/adjustment prohibited items

A. Paint-locked screws

NOTE

- **To prevent loose screws, a screw lock in blue or green series color is applied to the screws.**
- **The screw lock is applied to the screws that may get loose due to the vibrations and loads created by the use of machine or due to the vibrations created during transportation.**
- **If the screw lock coated screws are loosened or removed, be sure to apply a screw lock after the screws are tightened.**

B. Red-painted screws

NOTE

- **The screws which are difficult to be adjusted in the field are painted in red in order to prevent them from being removed by mistake.**
- **Do not remove or loosen any of the red-painted screws in the field. It should also be noted that, when two or more screws are used for a single part, only one representative screw may be marked with the red paint.**

C. Variable resistors on board

NOTE

- **Do not turn the variable resistors on boards for which no adjusting instructions are given in Adjustment/Setting.**

D. Removal of PWBs

⚠ CAUTION

- **When removing a circuit board or other electrical component, refer to "Handling of PWBs" and follow the corresponding removal procedures.**
- **The removal procedures given in the following omit the removal of connectors and screws securing the circuit board support or circuit board.**
- **Where it is absolutely necessary to touch the ICs and other electrical components on the board, be sure to ground your body.**

4.2 Precautions to be observed when option configuration is changed

- The exit tray detection position must be changed depending on configuration of the options mounted on the printer.

4.2.1 Setting the exit tray detection position

A. When only OT-602, MT-502, or SD-505 is mounted

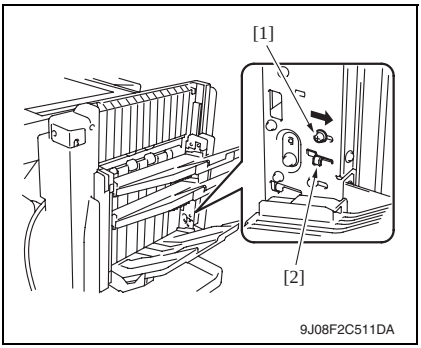

1. Loosen the screw [1] and move it in the direction of the arrow. Then, tighten it at the new position.

NOTE

- **This step should be done securely. If not, any trouble may happen.**
- **Be sure to move the screw itself.**
- **Do not move the screw by using the adjust plate [2].**

B. When OT-602 + MT-502 or OT-602 + SD-505 are mounted

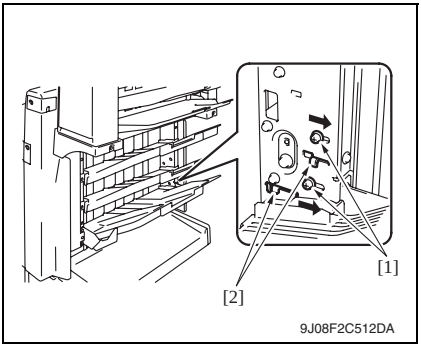

1. Loosen two screws [1] and move them in the direction of the arrow. Then, tighten them at the corresponding new positions.

NOTE

- **This step should be done securely. If not, any trouble may happen.**
- **Be sure to move the screw itself.**
- **Do not move the screw by using the adjust plate [2].**

C. When only FS-519 is mounted

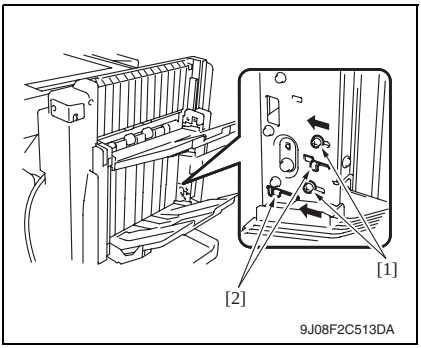

1. Loosen two screws [1] and move them in the direction of the arrow. Then, tighten them at the corresponding new positions.

NOTE

- **This step should be done securely. If not, any trouble may happen.**
- **Be sure to move the screw itself.**
- **Do not move the screw by using the adjust plate [2].**

4.3 Disassembly/Assembly/Cleaning list (Other parts)

4.3.1 Disassembly/Assembly parts list

No.	Section	Part name	Ref. page
1	Exterior parts	Finisher unit right front cover	P.22
2		Finisher unit left front cover	P.22
3		Finisher unit rear cover	P.22
4		Finisher unit upper cover	P.23
5		Front door	P.23
6		Middle guide	P.24
7		Intake cover	P.25
8		Tray unit front cover	P.25
9		Tray unit rear cover	P.25
10		Connector cover	P.25
11		Tray 1	P.26
12		Tray 2	P.26
13		Output tray OT-602 (Option)	P.26
14	Unit	Tray unit	P.27
15		Finisher unit	P.30
16		Stapler unit	P.38
17		Punch kit PK-515 (Option)	P.39
18	Electric parts	Exit roller motor	P.40
19		Elevator motor	P.51
20		Duplex guide solenoid	P.58
21		FS control board	P.60
22	Others	Storage paddle drive clutch	P.40
23		Exit upper roller	P.40
24		Storage paddle	P.40
25		Exit paddle drive clutch	P.45
26		Exit lower roller	P.45
27		Aligning section	P.48
28		Timing belt	P.51
29		Shutter drive gear	P.57

4.4 Disassembly/Assembly procedure

4.4.1 Finisher unit right front cover

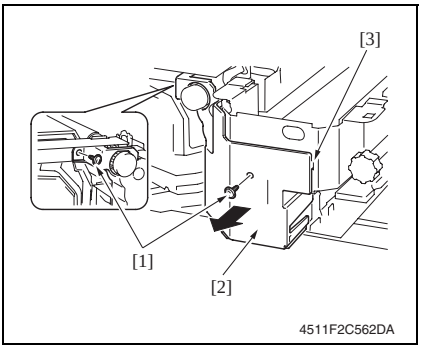

1. Open the front door.
2. Remove two screws [1] and remove the finisher unit right front cover [2].

NOTE

- **At reinstallation, first fit the tab [3] into position.**

4.4.2 Finisher unit left front cover

1. Remove the front door.
See P.23

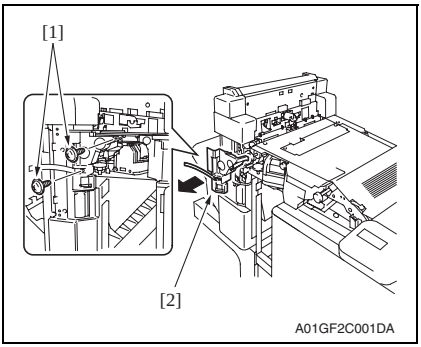

2. Remove two screws [1] and remove the finisher unit left front cover [2].

4.4.3 Finisher unit rear cover

1. Remove the finisher unit.
See P.30

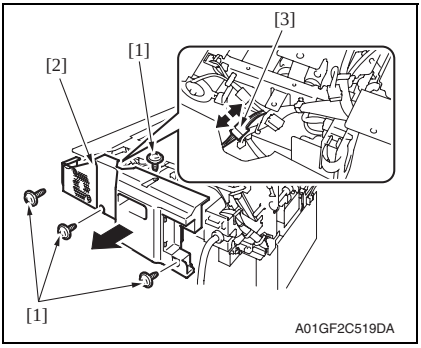

2. Remove four screws [1] and remove the finisher unit rear cover [2].
3. Disconnect the connector [3].

4.4.4 Finisher unit upper cover

1. Remove the finisher unit.
See P.30
2. Remove the finisher unit rear cover.
See P.22

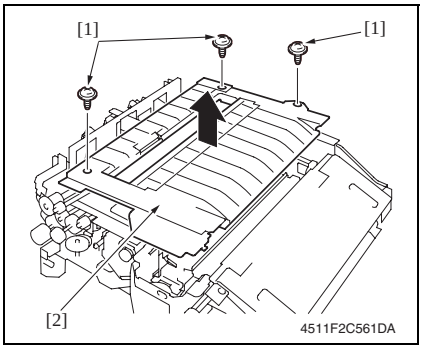

3. Remove three screws [1] and remove the finisher unit upper cover [2].

4.4.5 Front door

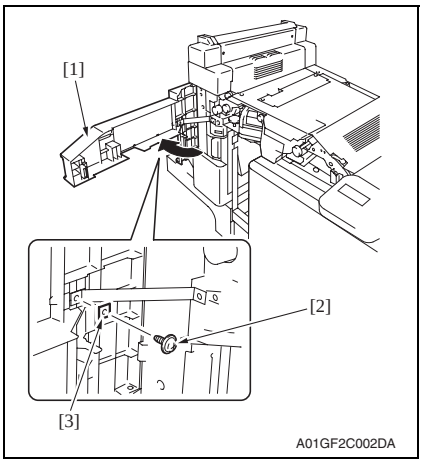

1. Open the front door [1].
2. Remove the screw [2] and the retaining plate [3].

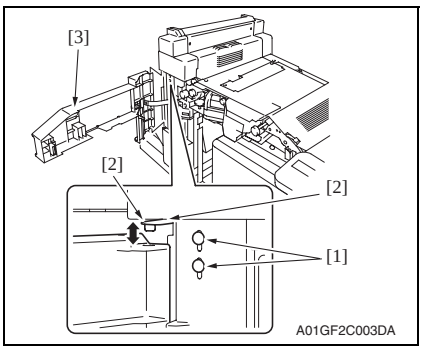

3. Loosen two screws [1] and move the hinge [2] up. Then remove the front door [3].

4.4.6 Middle guide

1. Remove the finisher unit.
See P.30
2. Remove the finisher unit rear cover.
See P.22
3. Remove the finisher unit upper cover.
See P.23

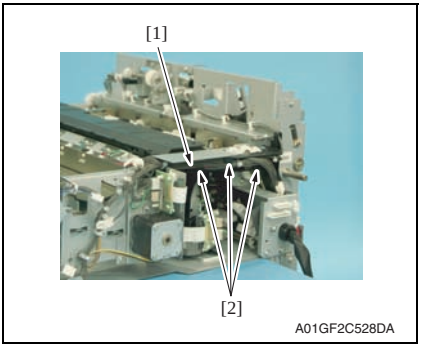

4. Remove the harness bundle [1] from three harness guides [2].

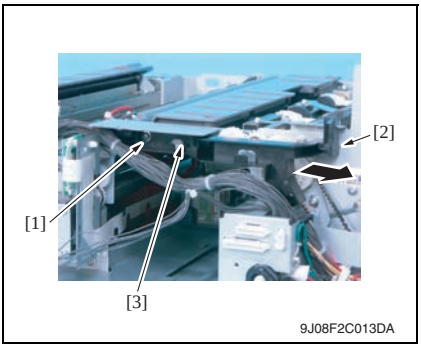

5. Remove the screw [1] and tab [2], and remove the harness guide [3].

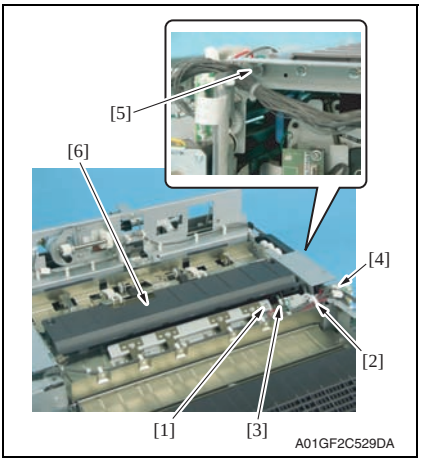

6. Remove the screw [1] and the ground wire.
7. Remove the wire saddle [2] and edge cover [3], and disconnect the connector [4].
8. Remove the shoulder screw [5] and remove the middle guide [6].

4.4.7 Intake cover

1. Remove the finisher unit.
See P.30
2. Remove the finisher unit rear cover.
See P.22
3. Remove the finisher unit upper cover.
See P.23

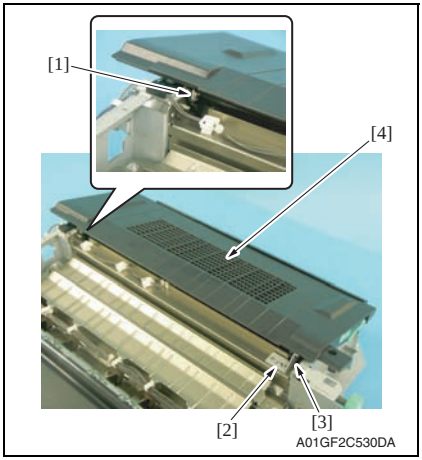

4. Remove the C-ring [1].
5. Remove the screw [2] and the metal bracket [3], and the intake cover [4].

4.4.8 Tray unit front cover/Tray unit rear cover/Connector cover

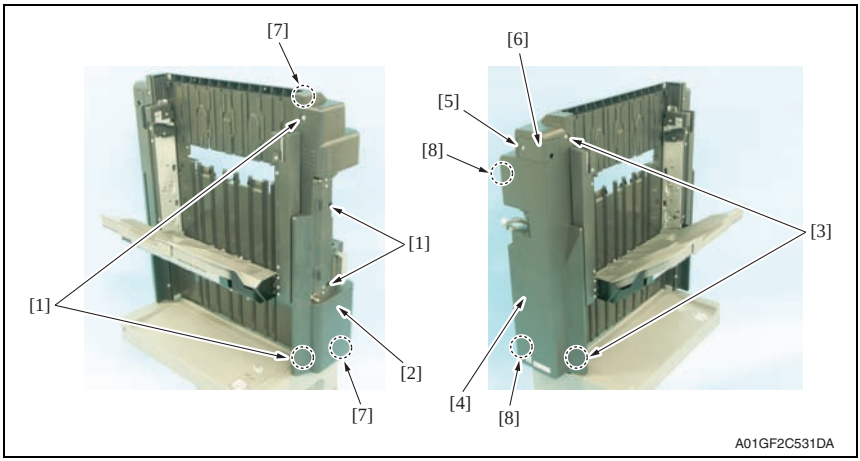

1. Remove four screws [1] and remove the tray unit front cover [2].
2. Remove two screws [3] and remove the tray unit rear cover [4].
3. Remove the screw [5] and remove the connector cover [6].

NOTE

- **When installing the tray unit front cover, snap the tab [7] first.**
- **When installing the tray unit back cover, snap the tab [8] first.**

4.4.9 Tray 1/Tray 2

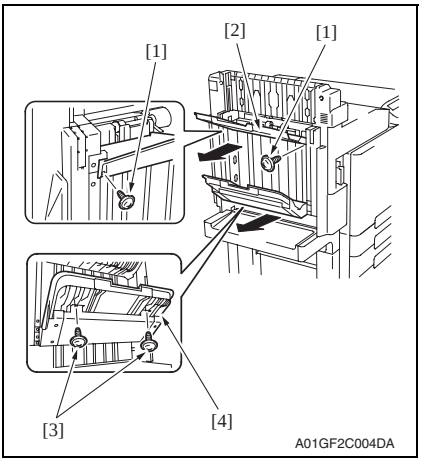

1. Remove two screws [1], and remove the tray 1 [2].
2. Remove two screws [3], and remove the tray 2 [4].

4.4.10 Output tray (OT-602): Option

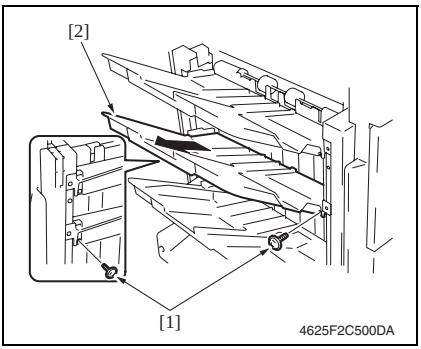

1. Remove two screws [1], and remove the output tray [2].

4.4.11 Tray unit

NOTE

- **When removing the tray unit, set the tray unit to its home position.**
- **If the exit tray (OT-602) is installed, remove it in advance.**
  See P.26

1. Remove the front door.
See P.23

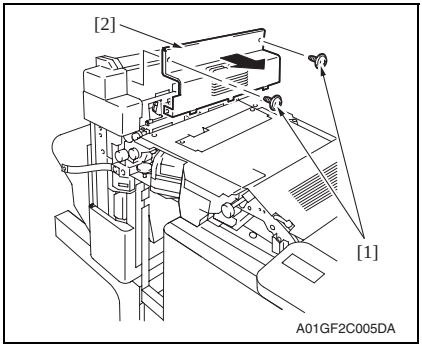

2. Remove two screws [1] and remove the tray unit upper cover [2].

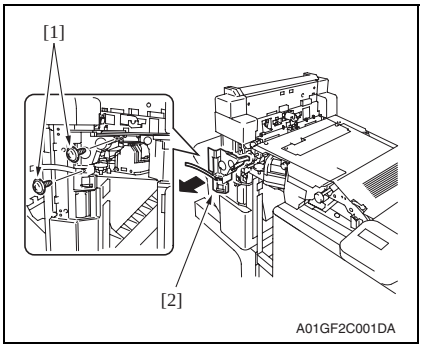

3. Remove two screws [1] and remove the finisher unit left front cover [2].

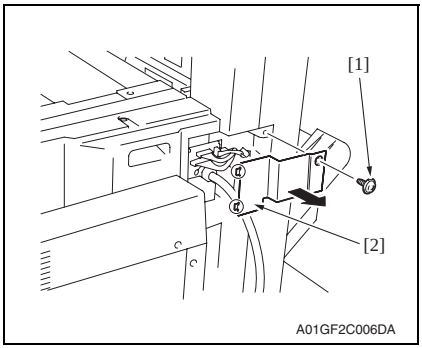

4. Remove the screw [1] and remove the connector cover [2].

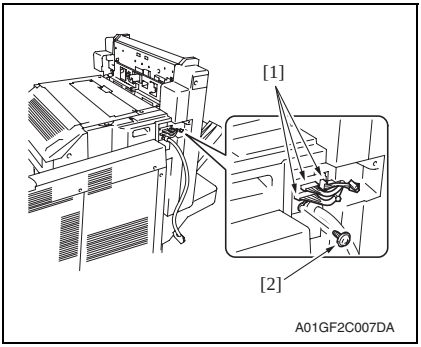

5. Disconnect three connectors [1] and remove the screw [2], and the ground wire.

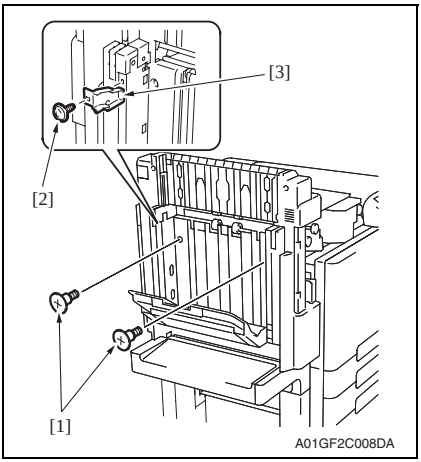

6. Remove two shoulder screws [1].

NOTE

- **When the output tray (OT-602) is mounted, remove the screw [2] and remove the mounting holder [3].**

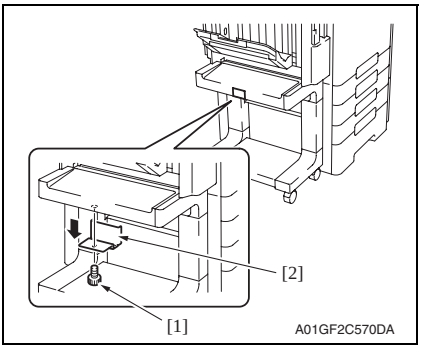

7. Remove the screw [1] and the stopper [2] shown in the illustration.

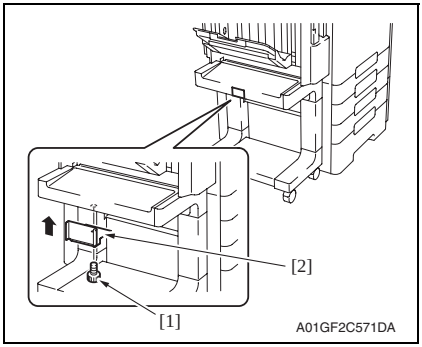

8. Position the stopper [2] as shown and secure it with the screw [1].

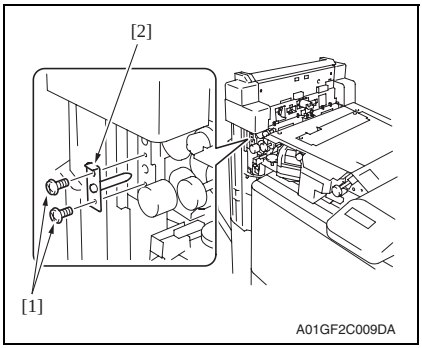

9. Remove two screws [1] and remove the mounting bracket [2].

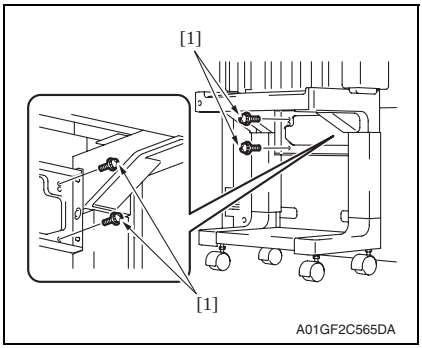

10. Remove four screws [1].

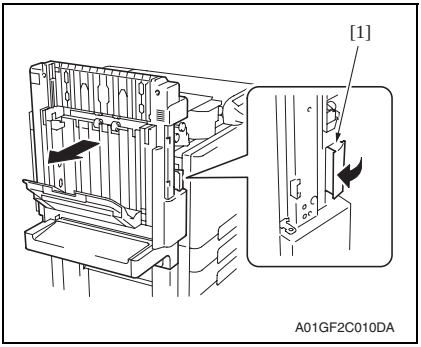

11. Pull the lock release lever [1] and remove the tray unit.

NOTE

- **Make sure the height and angle adjustment of stand table when installing the finisher.**
  See P.36

4.4.12 Finisher unit

1. Remove the tray unit.
See P.27

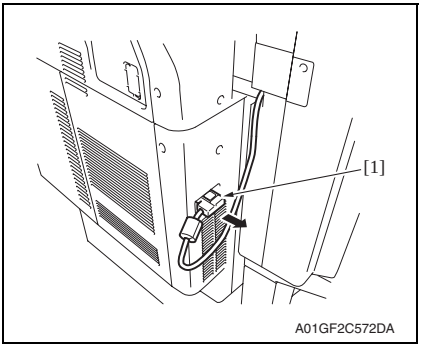

2. Disconnect the hookup cord [1].

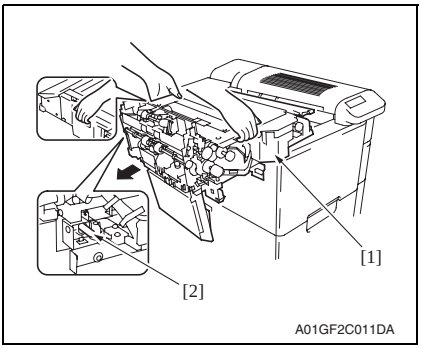

3. Hold the positions as shown in the illustration to remove the finisher unit [1].

NOTE

- **When setting the finisher unit, make sure to fit the finisher unit hole with stabilizing pin [2] and set it to the end.**
- **Make sure the height and angle adjustment of stand table when installing the finisher.**
  See P.36

4.4.13 Changing the height of the stand table

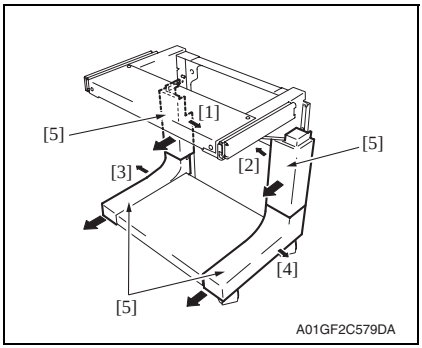

1. Remove four covers [5] while removing four latches [1], [2], [3], and [4].

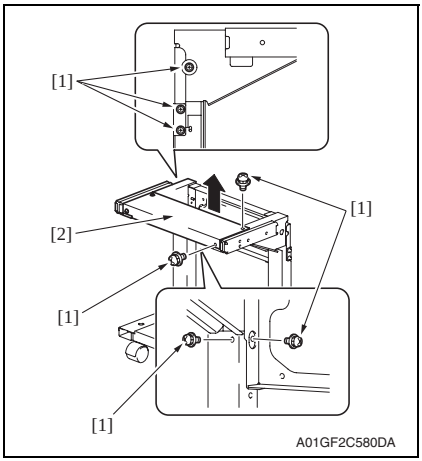

2. Remove seven screws [1] to remove the upper unit (rear) for the stand table [2].

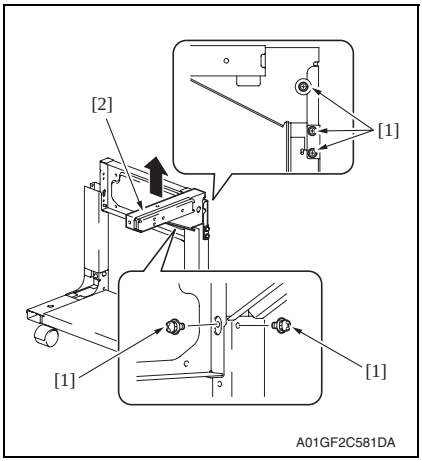

3. Remove five screws [1] to remove the upper unit (front) for the stand table [2].

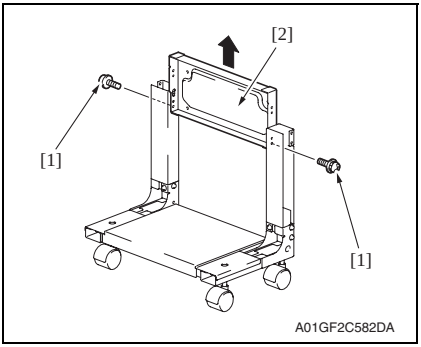

4. Remove two screws [1] to remove the mounting plate [2].

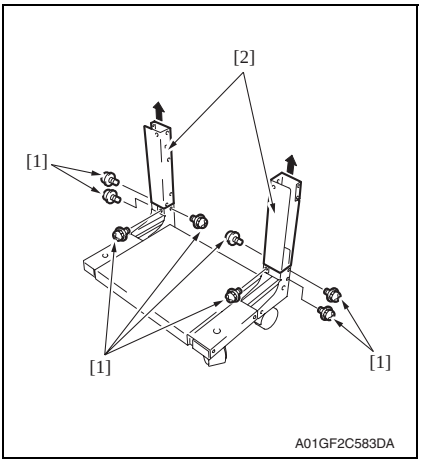

5. Remove eight screws [1] to remove two supports [2].

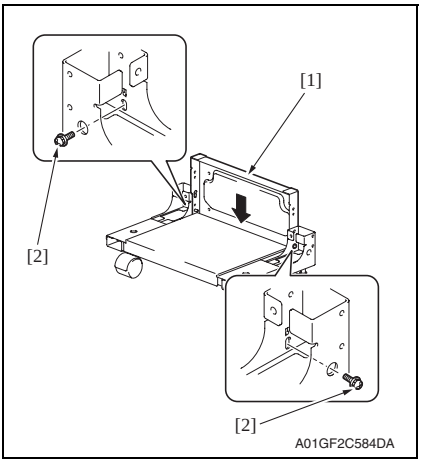

6. Set the mounting plate [1] which was removed in step 4, and tighten two screws [2].

NOTE

- **Use cares since the length of these screws are different from other screws.**

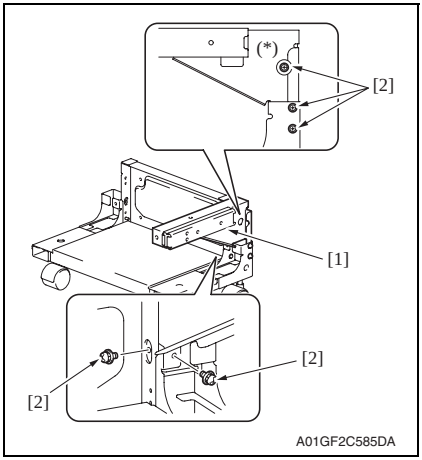

7. Mount the stand table upper unit (front) [1] which was removed in step 3, and tighten five screws [2].

NOTE

- **Use care since the lengths of the screws (*) shown on the illustration are different from other screws.**

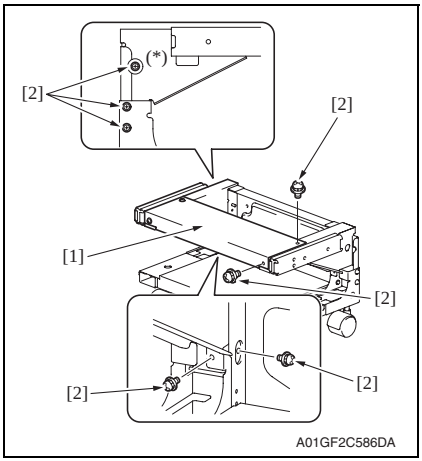

8. Mount the stand table upper unit (rear) [1] which was removed in step 2, and tighten seven screws [2].

NOTE

- **Use care since the lengths of the screws (*) shown on the illustration are different from other screws.**

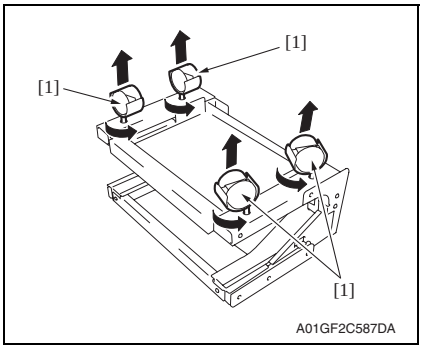

9. Place the stand table upside-down, and remove four casters [1].

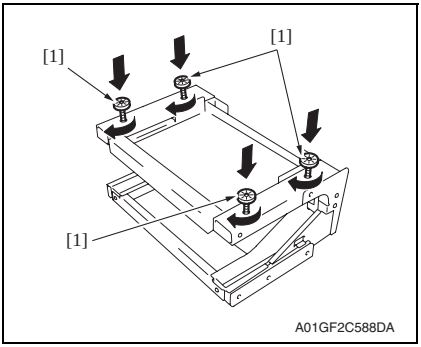

10. Mount four adjusting plates [1] furnished with the main body.

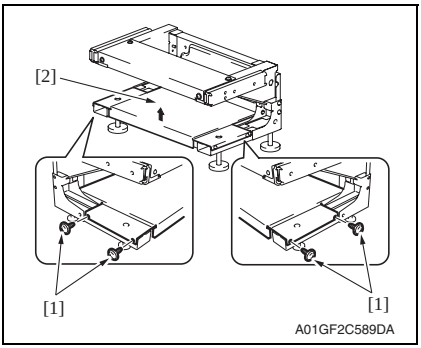

11. Remove four screws [1] and remove the lower unit for the stand table [2].

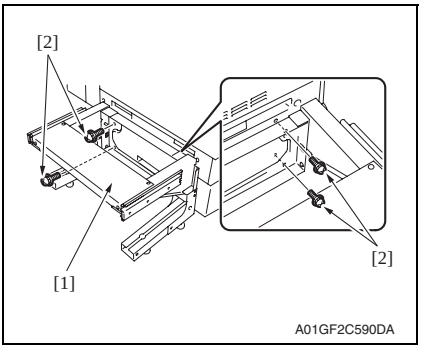

12. Mount the stand table [1] to the main body, and tighten it with four screws [2].

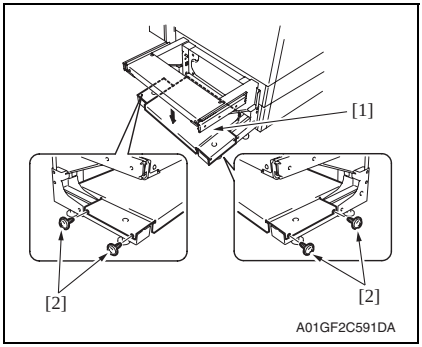

13. Mount the lower unit for the stand table [1] which was removed in step 11, and tighten four screws [2].

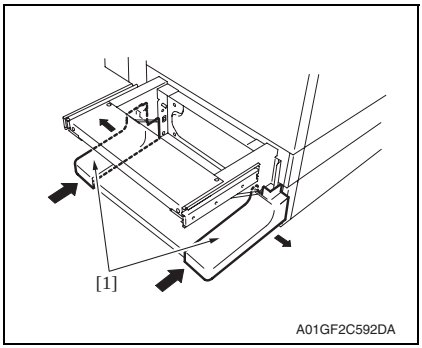

14. Mount two covers [1] which were removed in step 1.

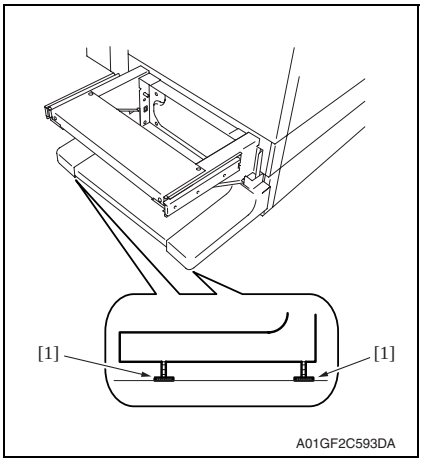

15. Adjust the adjusting plate [1] to touches the floor.

NOTE

- **When the height of the setting table is changed, check for the tilt of the setting table.**
  See P.36

4.4.14 Height and angle adjustment of stand table

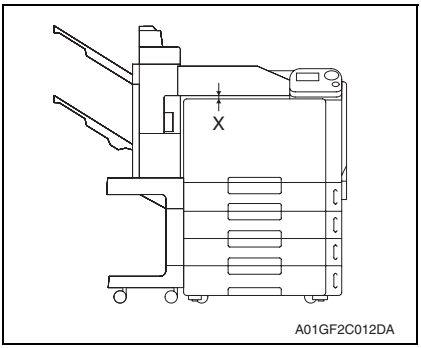

1. Measure the width of X on front and back side.
   Specifications: 5 ± 2 mm
2. Following adjustment is necessary when the width does not fall within the specifications.

3. Pull the lever to unlock it, and remove the tray unit from the main body.

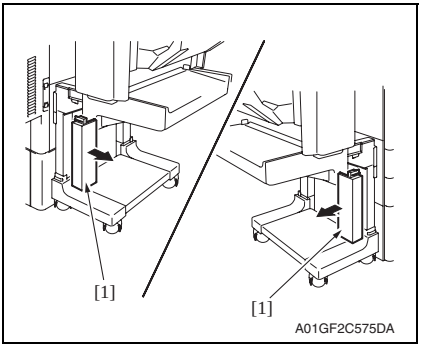

4. Remove two covers [1] from the legs of the stand table.

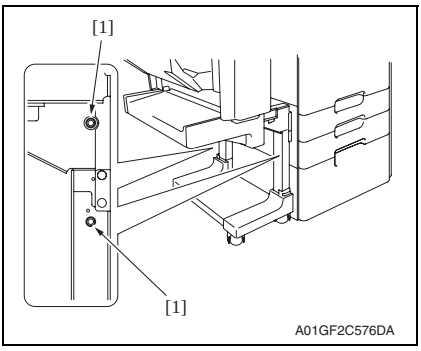

5. Loosen four screws [1] (two screws each for the left and right) and adjust the height of the stand. Tighten the screws again.

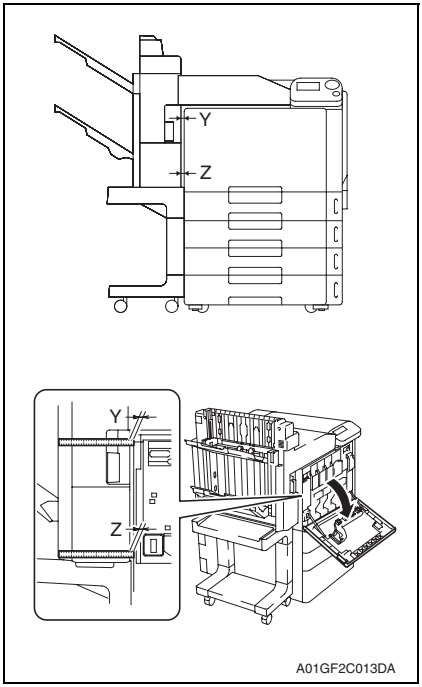

6. Measure the width of Y and Z (clearance of the exterior parts) on front and back side.
Specifications:
Y = Z - 1 mm
(Y must be smaller than Z)
Z = 7 ± 2 mm (front side)
Z = 9 ± 2 mm (back side)

NOTE

- **To measure the front side, open the front door and measure it using finisher side as supporting point referring showed on the illustration left.**

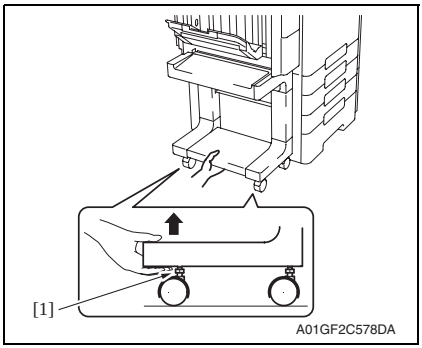

7. When the value does not fall within the specified range, remove the tray unit and pull up the casters to adjust them.

NOTE

- **For adjusting the casters, hold the bottom part of the stand table and turn the adjusting bolt [1].**

4.4.15 Stapler unit

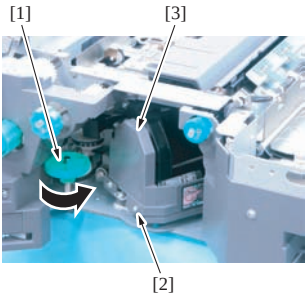

1. Open the front door.
2. Turn the dial [1], and move the stapler forward.
3. Remove the staple cartridge.
4. Remove the screw [2], and remove the cover [3].

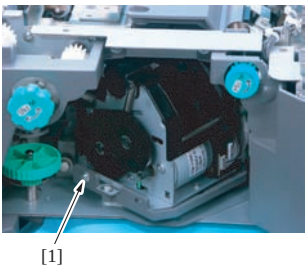

5. Remove the screw [1].

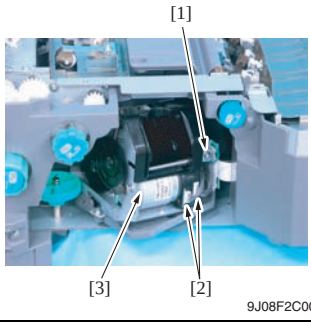

6. Remove the screw [1] and remove the ground wire.
7. Disconnect two connectors [2] and remove the stapler unit [3].

4.4.16 Punch kit (PK-515): Option

1. Remove the finisher unit.
See P.30
2. Remove the finisher unit rear cover.
See P.22
3. Remove the finisher unit upper cover.
See P.23
4. Remove the finisher unit right front cover.
See P.22

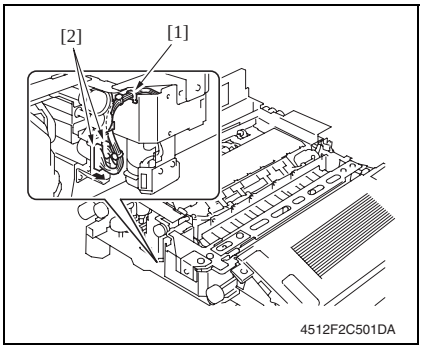

5. Remove the edge cover [1] and disconnect two connectors [2].

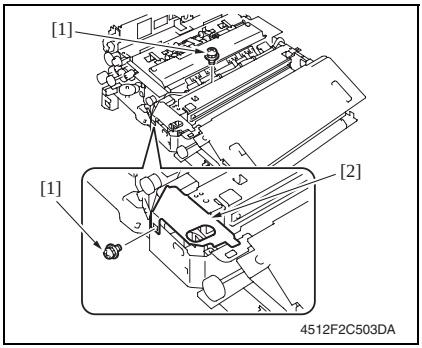

NOTE
- **When the creasing unit is mounted, remove two screws [1], and remove the metal bracket [2].**

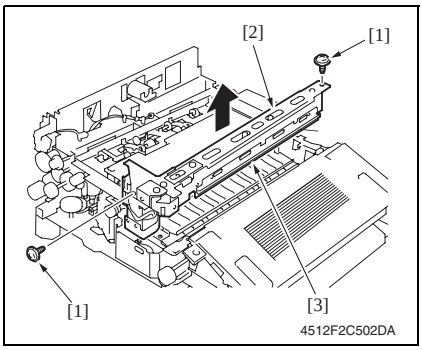

6. Remove two screws [1] and remove the punch kit [2].

NOTE
- **Take care so that the mylar [3] will not be bent.**

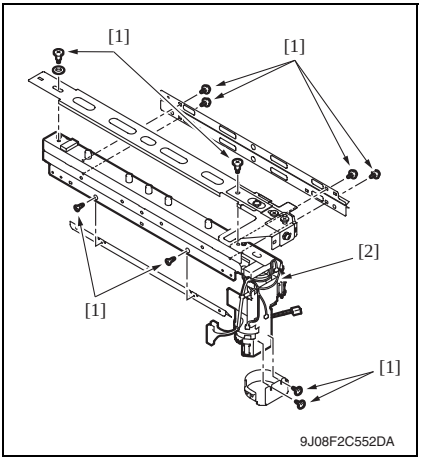

7. Remove ten screws [1] and remove the punch kit [2].

4.4.17 Exit roller motor/Storage paddle drive clutch/Exit upper roller/Storage paddle

1. Remove the finisher unit.
See P.30
2. Remove the finisher unit left front cover.
See P.22

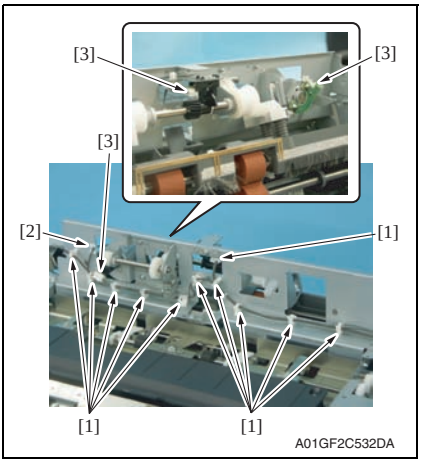

3. Remove eleven wire saddles [1] and remove the edge cover [2].
4. Disconnect three connectors [3].

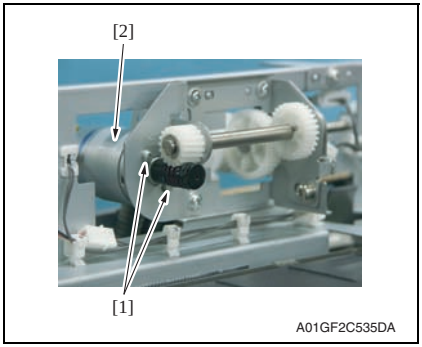

5. Remove two screws [1] and remove the exit roller motor [2].

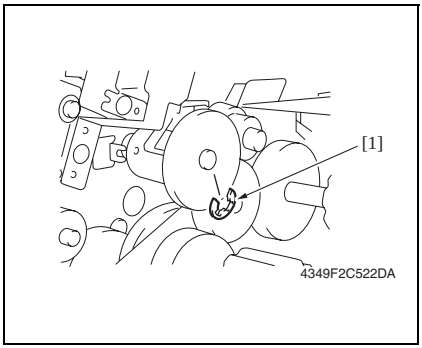

6. Remove the E-ring [1].

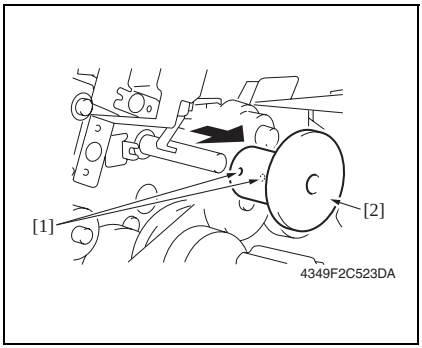

7. Loosen two hexagonal socket head screws [1], and remove the storage paddle drive clutch assy [2].

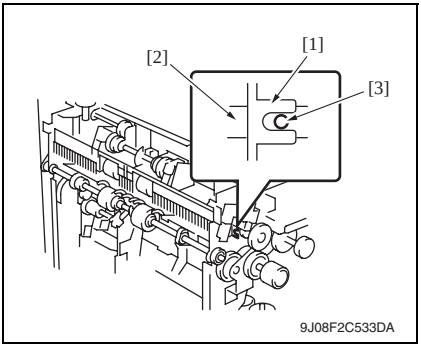

NOTE

- **When installing the storage paddle drive clutch, insert the hexagonal wrench into the flame notch [1], and confirm that the storage paddle drive axis [2] fits to the 2 mm-hole [3].**

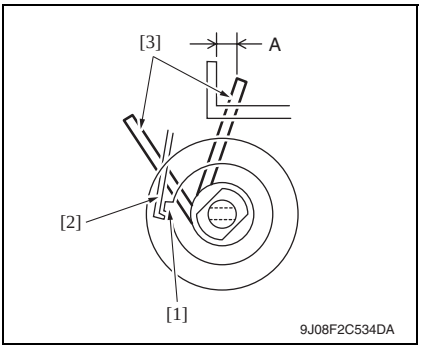

NOTE

- **When installing the storage paddle drive clutch, hook the solenoid flapper [2] on the tab [1] and confirm the storage paddle [3] locates the position as shown in the illustration.**
  Specifications A: 3.3 ± 3 mm

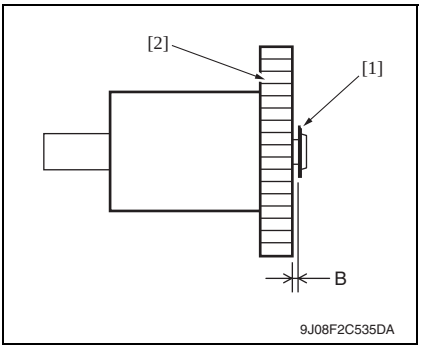

NOTE

- **When installing the storage paddle drive clutch, adjust the distance between the E-ring [1] and the storage paddle drive clutch gear [2].**
  Specifications B: 0.2 ± 0.1 mm

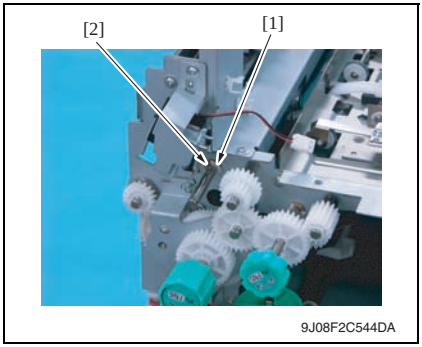

8. Remove the C-ring [1] and the bushing [2].

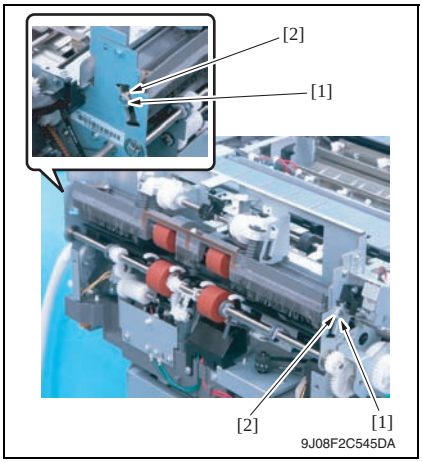

9. Remove two C-rings [1] and two bushings [2].

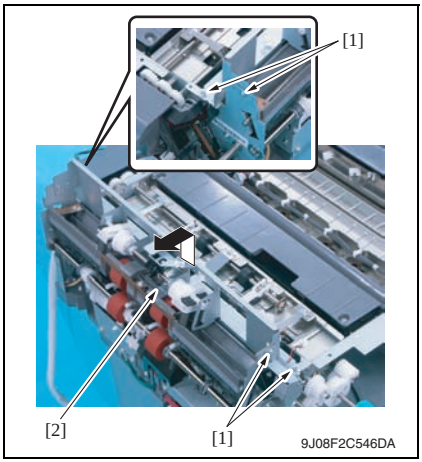

10. Remove four screws [1] and remove the exit transportation section (upper) assy [2].

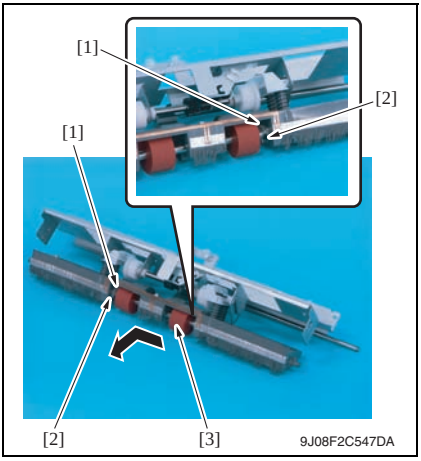

11. Remove two C-rings [1] and two bearings [2], and remove the exit upper roller assy [3].

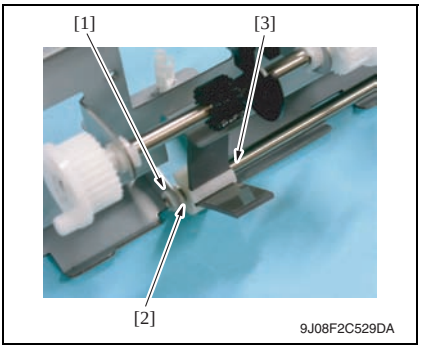

12. Remove the C-ring [1] and the bushing [2], and remove the storage paddle assy [3].

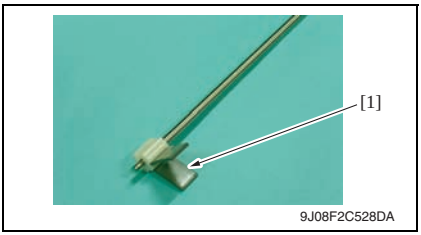

13. Remove the storage paddle [1].

14. Disassemble the pressure/retraction system units

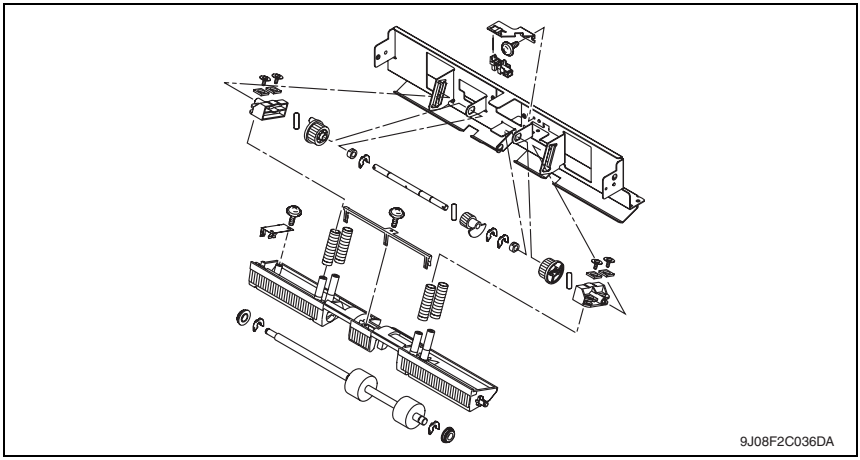

4.4.18 Exit paddle drive clutch/Exit lower roller

1. Remove the finisher unit.
See P.30
2. Remove the finisher unit left front cover.
See P.22

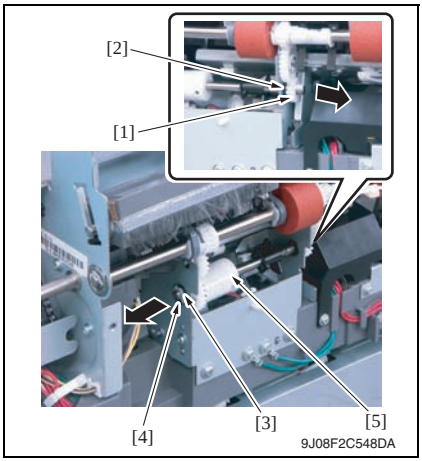

3. Remove the gear [1] and the bushing [2].
4. Remove the C-ring [3] and the bushing [4].
5. Remove the exit paddle drive clutch assy [5].

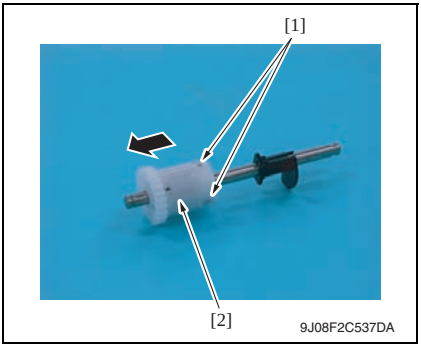

6. Loosen two hexagonal socket head screws [1], and remove the exit paddle drive clutch assy [2].

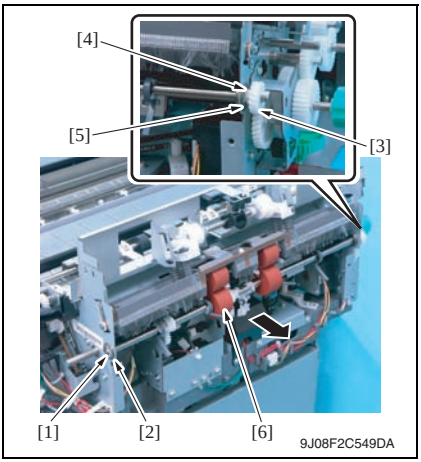

7. Remove the C-ring [1] and the bearing [2].
8. Remove the gear [3], C-ring [4] and bearing [5].
9. Remove the exit lower roller assy [6].

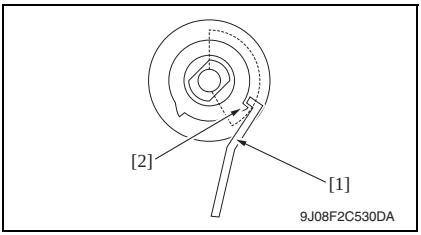

NOTE

- **When installing the exit paddle drive clutch, turn up the side that the distance between tabs is wider and hook the solenoid flapper [1] on the tab [2].**

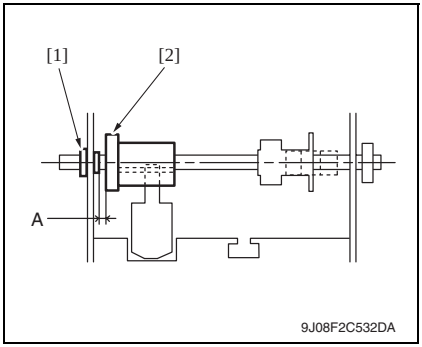

NOTE

- **When installing the exit paddle drive clutch assy, adjust the distance between the bushing [1] and the exit paddle drive clutch [2] to 0.2 mm and tighten two hexagonal socket head screws.**

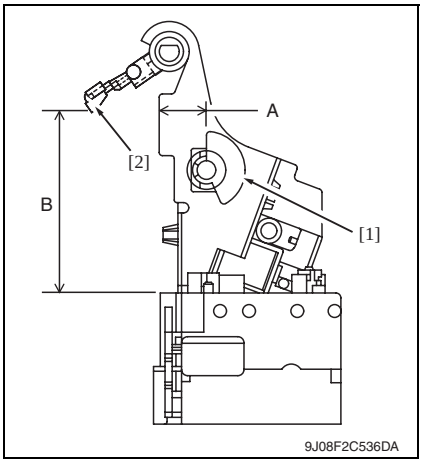

NOTE

- **When installing the exit paddle drive clutch assy, adjust the position of blocked panel [1].**
  Specifications A: 14.6 ± 1 mm
- **When installing the exit lower roller assy, adjust the position of the arm holder [2].**
  Specifications B: 56.4 ± 3 mm

10. Disassemble the exit lower roller assy

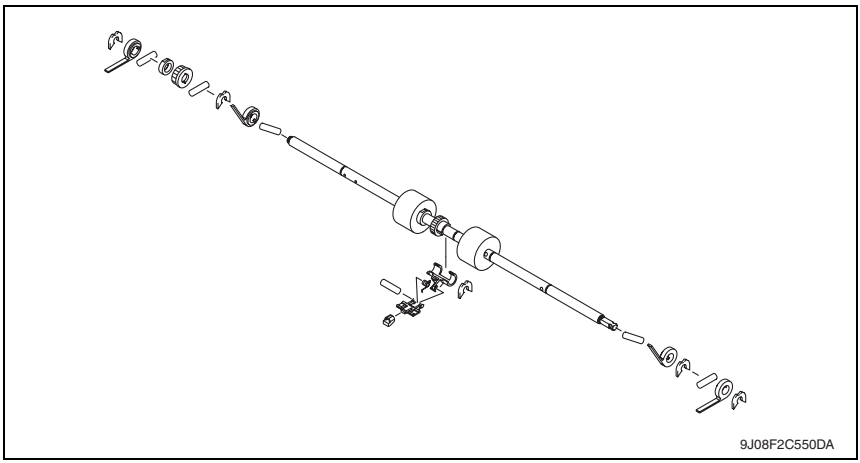

4.4.19 Aligning section

1. Remove the finisher unit left front cover.
See P.22
2. Remove the finisher unit rear cover.
See P.22
3. Remove the finisher unit upper cover.
See P.23
4. Remove the exit transportation section (upper) assy.
See P.40
5. Remove the exit lower roller assy.
See P.45

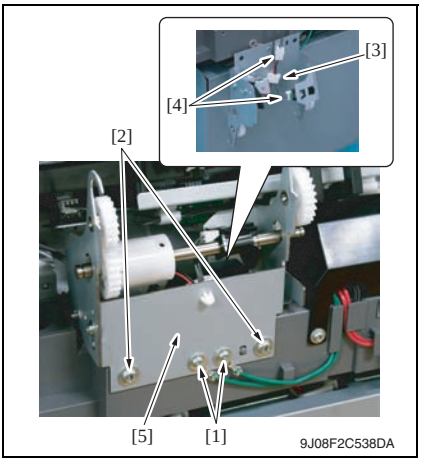

6. Remove two screws [1] and remove the ground wire.
7. Remove two screws [2].
8. Remove the wire saddle [3] and disconnect two connectors [4], and remove the exit paddle drive clutch mounting plate assy [5].

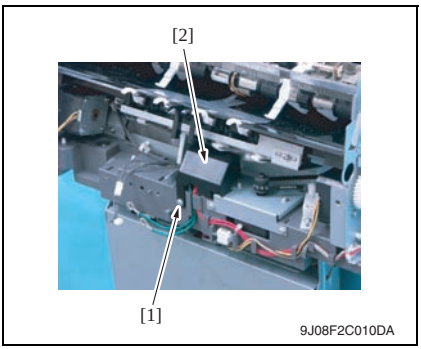

9. Remove the screw [1] and remove the connector cover [2].

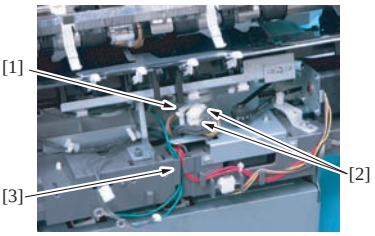

9J08F2C011DA

10. Remove the wire saddle [1] and disconnect two connectors [2].
11. Remove the ground wire from the harness guide [3].

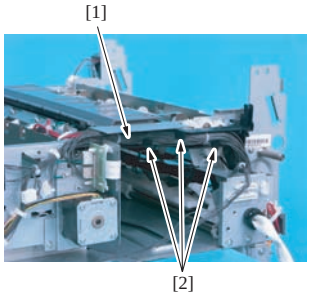

9J08F2C012DA

12. Remove the harness bundle [1] from the harness guide [2].

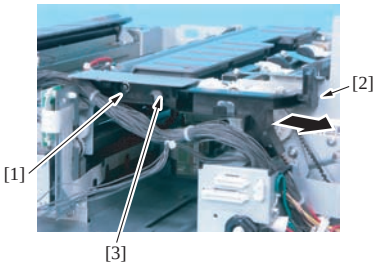

9J08F2C013DA

13. Remove the screw [1] and tab [2], and remove the harness guide [3].

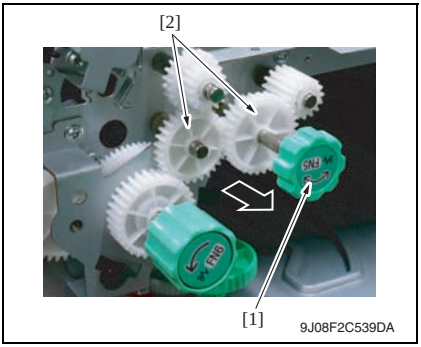

14. Remove the knob [1] of FN5 and remove two gears [2].

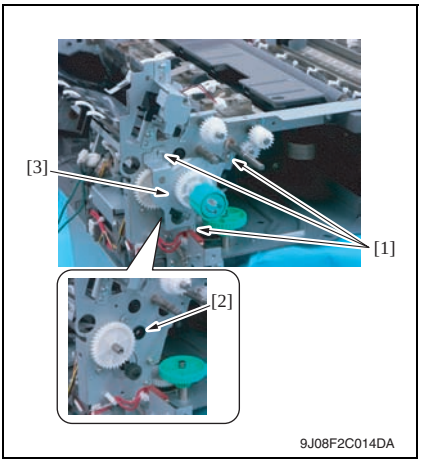

15. Remove three screws [1] and bushing [2], and remove the gear assy [3].

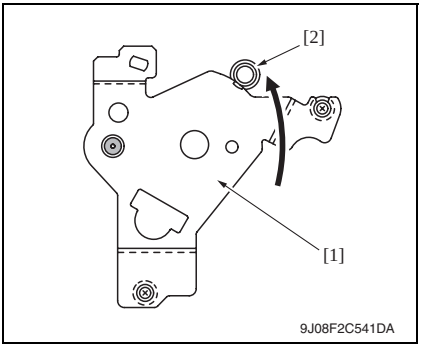

NOTE

- **When installing the gear assy, fit the mounting plate [1] to the caulking axis [2], and tightening with screw.**
- **Make sure that the gear rotates smoothly.**

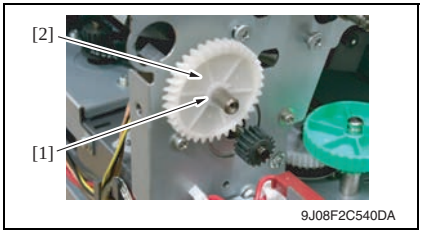

16. Remove the C-ring [1] and remove the gear [2].

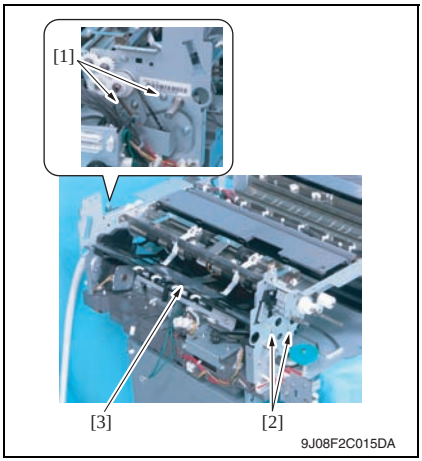

17. Remove two screws [1] and two shoulder screws [2], and remove the aligning plate assy [3].

4.4.20 Elevator motor/Timing belt

A. Removal procedure

1. Remove the tray unit.
See P.27

2. Remove the tray unit front cover.
See P.25

3. Remove the tray unit rear cover.
See P.25

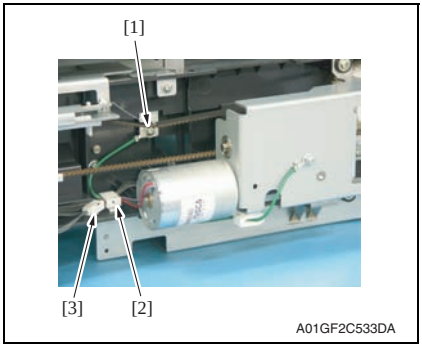

4. Remove the screw [1] and remove the ground wire.

5. Remove the wire saddle [2] and disconnect the connector [3].

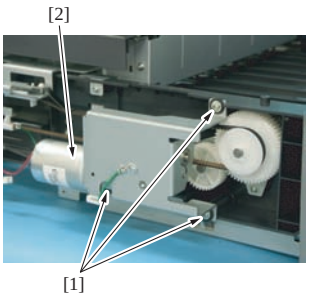

6. Remove three screws [1] and remove the elevator motor assy [2].

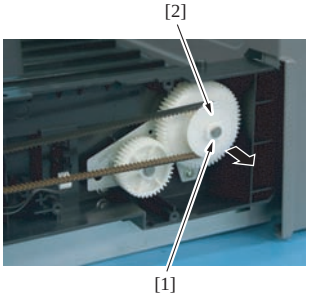

7. Remove the C-ring [1] and remove the gear cover [2].

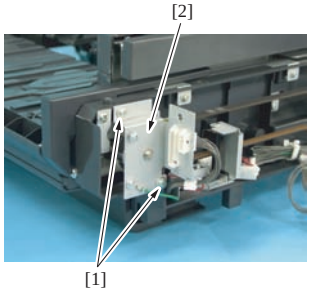

8. Remove two screws [1] and remove the metal bracket [2].

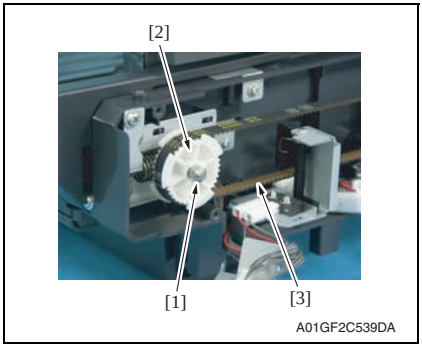

9. Remove the C-ring [1] and remove the gear (upper rear) [2] and belt [3].

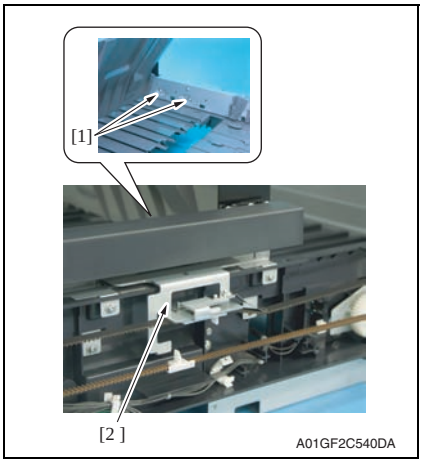

10. Remove two screws [1] and remove elevator mounting plate (rear) [2].

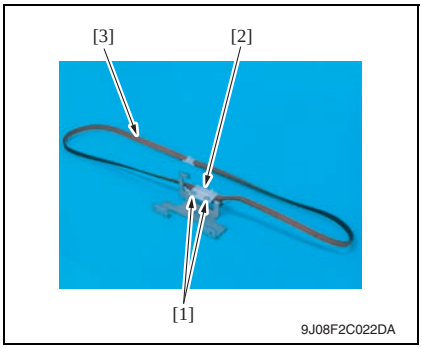

11. Remove two screws [1] and remove the belt holder [2].
12. Remove the timing belt (rear) [3].

NOTE

- **When installing the timing belt, make sure there is no looseness.**

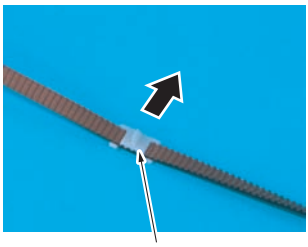

13. Remove the lever [1].

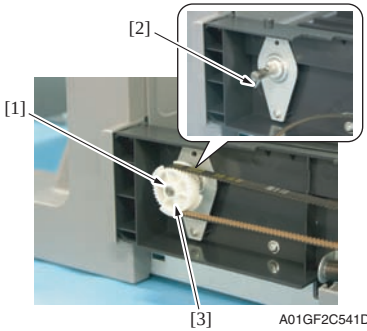

14. Remove the C-ring [1] and pin [2], and remove the gear (lower front) [3].

NOTE

- **Use care not to lose the pin.**

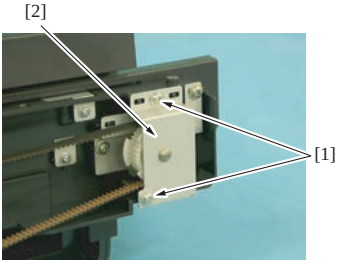

15. Remove two screws [1] and remove the metal bracket [2].

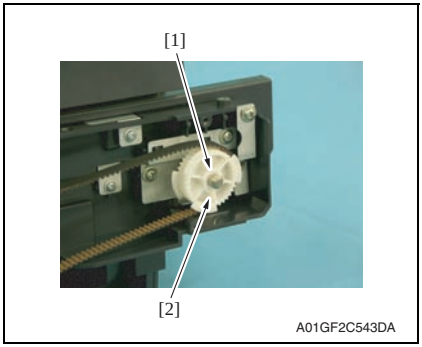

16. Remove the C-ring [1] and remove the gear (upper front) [2].

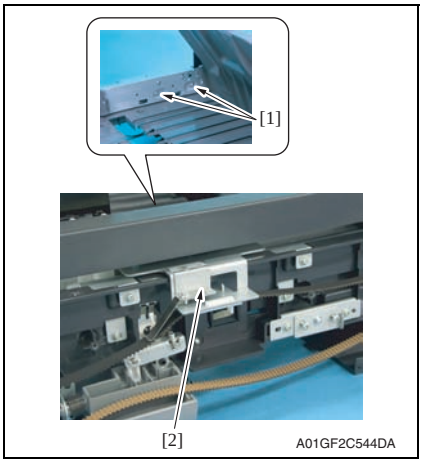

17. Remove two screws [1] and remove elevator mounting plate (front) [2].

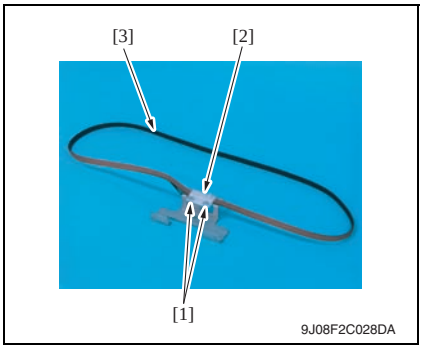

18. Remove two screws [1] and remove the belt holder [2].
19. Remove the timing belt (front) [3].

B. Adjustment of lever installation position

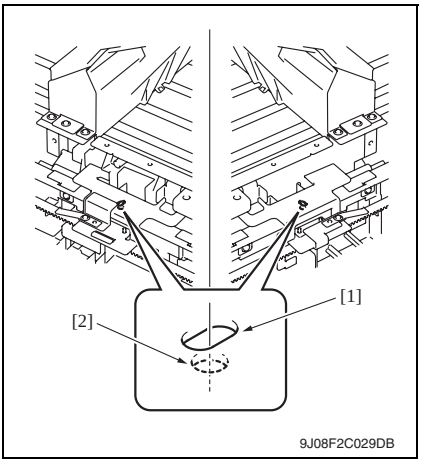

1. Install all components excepting for elevator motor assy.

NOTE

- **Fit the hole of the elevator mounting plate (front/back) [1] and the hole of the elevator tray [2], and install them by fixing the front and back along.**

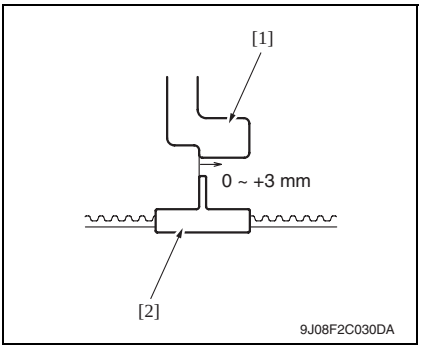

2. Fit the blocked plate [1] as shown in the illustration, and install the lever [2].
Specifications: 0 to +3 mm

3. Install the elevator motor assy.

4.4.21 Shutter drive gear

1. Remove the tray unit.
See P.27
2. Remove the tray unit front cover.
See P.25
3. Remove the tray unit rear cover.
See P.25

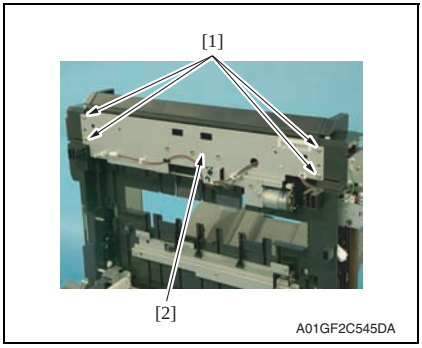

4. Remove four screws [1] and remove the shutter drive gear assy [2].

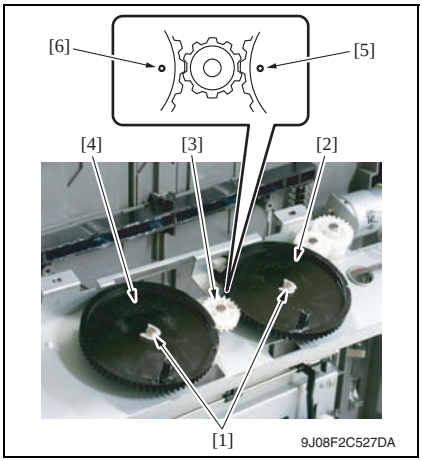

5. Remove two C-rings [1] and remove the gear 1 [2], gear 2 [3] and gear 3 [4].

NOTE

- **When installing the shutter drive gear, fit the match marks [5] of gear 1 and [6] of gear 3 as shown in the left illustration.**

4.4.22 Duplex guide solenoid

1. Remove the finisher unit.
See P.30
2. Remove the finisher unit rear cover.
See P.22
3. Remove the finisher unit upper cover.
See P.23

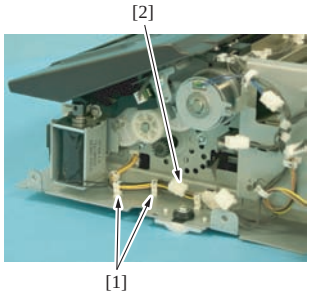

A01GF2C546DA

4. Remove two saddles [1] and disconnect the connector [2].

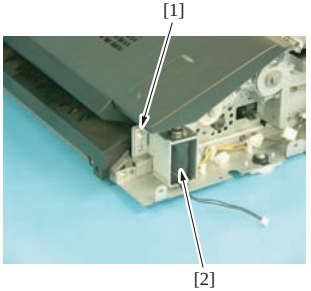

A01GF2C547DA

5. Remove the screw [1] and remove the duplex guide solenoid [2].

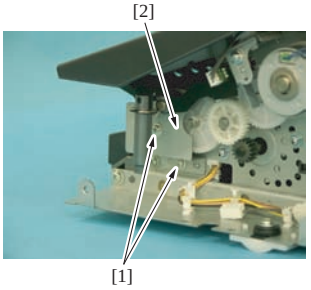

A01GF2C548DA

6. Remove two screws [1] and remove the duplex guide solenoid lever assy [2].

A. Adjustment

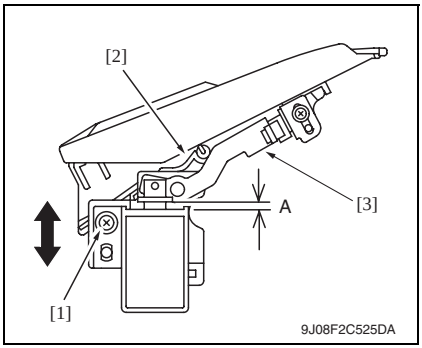

1. Loosen the screw [1].
2. Move the mounting plate up and down until the space A reaches specification, and tighten the screw [1].
Specification: 3.5 mm (Tolerance: + 0.5 mm)

NOTE

- **The switch tab [2] shall face down and touch to the lever [3].**

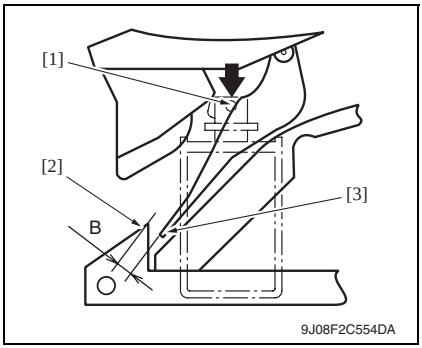

3. Lift down the plunger [1], and make sure that the gap B between switch tab end [2] and the guide [3] is over 5 mm.

4.4.23 FS control board

1. Remove the tray unit.
See P.27

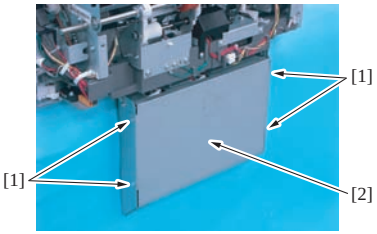

2. Remove four screws [1] and remove the cover [2].

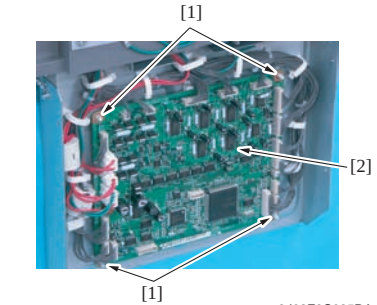

3. Disconnect all the connectors on the FS control board.
4. Remove the board supports [1], and remove the FS control board [2].

Adjustment/Setting

5. How to use the adjustment section

- "Adjustment/Setting" contains detailed information on the adjustment items and procedures for this machine.
- Throughout this "Adjustment/Setting," the default settings are indicated by " ".

Advance checks

- Before attempting to solve the customer problem, the following advance checks must be made. Check to see if:

- The power supply voltage meets the specifications.
- The power supply is properly grounded.
- The machine shares the power supply with any other machine that draws large current intermittently (e.g., elevator and air conditioner that generate electric noise).
- The installation site is environmentally appropriate: high temperature, high humidity, direct sunlight, ventilation, etc.; levelness of the installation site.
- The defective image attributes to the data itself which is sent from the PC to the printer.
- The density is properly selected.
- Correct paper is being used for printing.
- The units, parts, and supplies used for printing (developer, PC drum, etc.) are properly replenished and replaced when they reach the end of their useful service life.
- Toner is not running out.

⚠ CAUTION

- **To unplug the power cord of the machine before starting the service job procedures.**
- **If it is unavoidably necessary to service the machine with its power turned ON, use utmost care not to be caught in the scanner cables or gears of the exposure unit.**
- **Special care should be used when handling the fusing unit which can be extremely hot.**
- **The developing unit has a strong magnetic field. Keep watches and measuring instruments away from it.**
- **Take care not to damage the PC drum with a tool or similar device.**
- **Do not touch IC pins with bare hands.**

6. Sensor Check

6.1 Check procedure

A. Procedure

1. Call the Service Mode to the screen.
   See P.228 of the main body service manual.
2. Click [State Confirmation].
3. Click [Sensor Check].
4. Click two times [▼].

6.1.1 Sensor check screen

- This is only typical screen which may be different from what are shown on each individual main body.

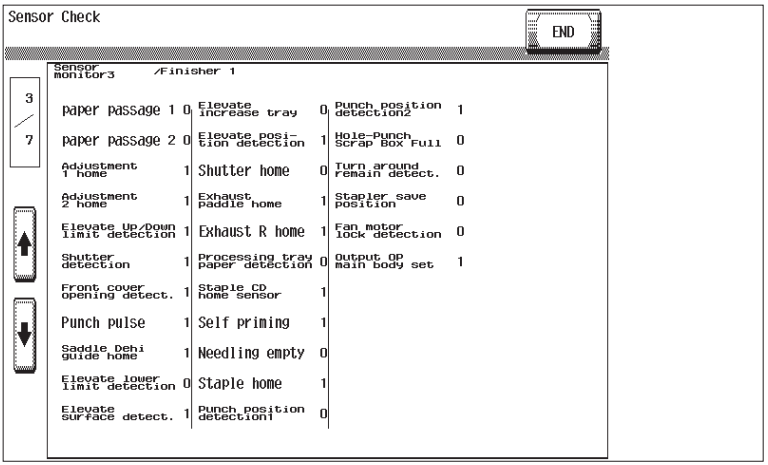

A01GF3E003DA

6.1.2 Sensor check list

Symbol	Panel display		Part/signal name	Operation characteristics/ panel display	
				1	0
PS1	Sensors monitor 3	Carrying Paper Passage	Entrance sensor	Paper present	Paper not present
PS2		Middle Paper Passage	Transport sensor	Paper present	Paper not present
PS7		Home1 (CD-Align)	Alignment home position sensor /1	At home	Not at home
PS8		Home2 (CD-Align)	Alignment home position sensor /2	At home	Not at home
SW3		Elevate Tray Raised/ Lowered	Elevator tray switch	ON	OFF
SW2		Shutter	Shutter detect switch	Closed	Open
SW1		Front Cover	Front door switch	Closed	Open
PS700		Punch Pulse	Punch motor pulse sensor	Blocked	Unblocked
PS23		Home (Saddle In and Out)	In & out guide home position sensor	Blocked	Unblocked
PS13		Elevate Tray Lowered	Elevator tray lower limit sensor	Blocked	Unblocked
PS12		Surface (Elev.)	Elevator top face detection sensor	Blocked	Unblocked
—		Elevate Tray Proliferation	Short connector	Set	Not set
PS11		Elevate Position	Elevator tray home position sensor	Blocked	Unblocked
PS14		Home (Shutter)	Shutter home position sensor	Blocked	Unblocked
PS6		Home (Exit Paddle)	Exit paddle home position sensor	Blocked	Unblocked
PS5		Home (Exit R)	Exit roller home position sensor	Blocked	Unblocked
PS3		Empty (Finisher)	Storage tray detect sensor	Blocked	Unblocked
PS9		Home (Staple CD)	Staple home position sensor	Blocked	Unblocked
—		Self Printing	Self-priming sensor	Blocked	Unblocked
—		Staple Empty	Staple empty detection sensor	Blocked	Unblocked
—		Home (Stapler)	Staple home position sensor	Blocked	Unblocked
PS500		Punch Position1	Punch cam sensor	Unblocked	Blocked
PS600		Punch Position2	Punch home position sensor	Unblocked	Blocked
PS30		Punch Dust Full	Punch Trash full sensor	Blocked	Unblocked
PS4		Remain in Reverse Section	Entrance switch back sensor	Unblocked	Blocked
PS10		Stapler Save Position	Stapler save position sensor	Blocked	Unblocked
FM9		Fan Motor Lock	Cooling fan motor	When turning	When stopped
SW4		Exit OP Machine Set	Slide switch	Set	Not set

7. Finisher operations

7.1 Entering Finisher

1. Call the Service Mode to the screen.
   See P.228 of the main body service manual.
2. Click [Finisher].
3. Click [CB-FN adjustment].
4. Click [Finisher Check].
5. Click the item one wants.

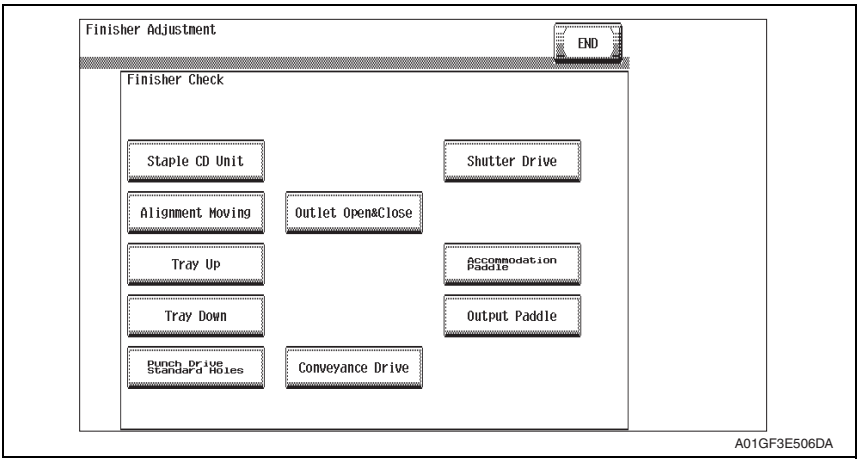

7.2 Finisher Check

A. Staple CD Unit

- Returns the staple unit to the predetermined position after it moves to the 2-point stapling position for A4.
  → Moves from the predetermined position to the inner 2-point stapling position for A4.
  → Moves from the starting position and stops after the predetermined time.
  → Moves to the front of A4.
  → Moves from the starting position and stops after the predetermined time.
  → Moves to the predetermined position.
  → The operation is finished.

B. Alignment Moving

- Aligning plates 1 and 2 return to the predetermined position after moving to the aligning position for A4S.
  → Moves from the predetermined position to the second predetermined position for A4S.
  → Stops after the predetermined time.
  → Moves to the aligning position for A4S.
  → Stops after the predetermined time.
  → Moves to the predetermined position.
  → The operation is finished.

C. Tray Up

- The elevator tray is raised to bin 1. (Bin 1 → Additional bin → Bin 2)
  → The exit opens.
  → The shutter closes.
  → The paper output tray is raised to bin 1.
  → The shutter opens.
  → The exit closes.
  → The operation is finished.

D. Tray Down

- The elevator tray is lowered from bin 1. (Bin 2 → Additional bin → Bin 1)
  → The exit opens.
  → The shutter closes.
  → The paper output tray is lowered from bin 1.
  → The shutter opens.
  → The exit closes.
  → The operation is finished.

E. Punch Drive Standard Holes (appears only when the punch kit PK-515 is installed)

- The punch is driven once at a standard hole.
  → The operation is finished.

F. Punch Drive MC 2Holes (appears only when the punch kit PK-515 is installed)

- The punch is driven once at a 2holes.
  → The operation is finished.

G. Outlet Open & Close

- Opens and closes the exit.
  → The exit opens.
  → Stops after the predetermined time.
  → The exit closes.
  → The operation is finished.

H. Fold Drive (appears only when the saddle kit SD-505 is installed)

See P.29 of the SD-505 service manual.

I. Saddle Outlet Open & Close (appears only when the saddle kit SD-505 is installed)

See P.29 of the SD-505 service manual.

J. Conveyance Drive (appears only when the saddle kit SD-505 is installed)

See P.29 of the SD-505 service manual.

K. Shutter Drive

- Opens and closes the shutter.
  → The exit opens.
  → The shutter closes.
  → Stops after the predetermined time.
  → The shutter opens.
  → The exit closes.
  → The operation is finished.

L. Bin SL Drive (appears only when the mail bin kit MT-502 is installed)

See P.10 of the MT-502 service manual.

M. Accommodation Paddle

- Drive the storage paddle two turns
  → The operation is finished,

N. Output Paddle

- Drive the exit paddle one turn
  → The operation is finished,

7.3 Punch stop position adjustment (PK-515)

A. Control panel

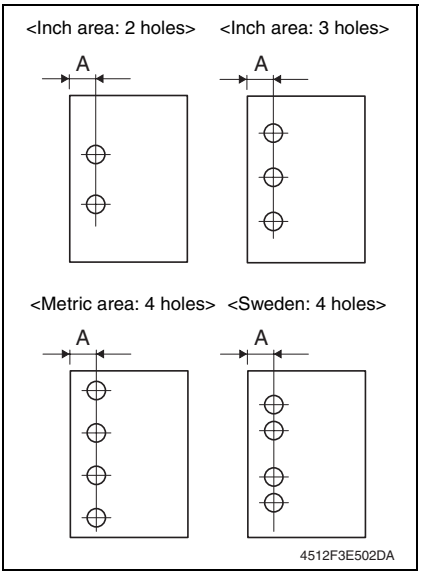

1. Set the printer into the hole punch mode and make a 1-sided print.
2. Measure width A on the print and check to see if the measured dimension falls within the specified range.
   <Inch area: 2 holes, 3 holes>
   Specifications: 9.5 ± 1.0 mm
   <Metric area: 4 holes>
   Specifications: 11 ± 1.0 mm
   <Sweden: 4 holes>
   Specifications: 11.5 ± 1.0 mm
3. If the measured width A outside the specified range, perform the following procedure to punch hole position adjustment.
4. Call the Service Mode to the screen.
5. Select [Finisher Adjust] → [CB-FN Adjust] → [PunchStopPosition].
6. Press the Menu/Select key.
7. Select the paper type and press the Menu/Select key.
8. Set the correction value using the ▲ or ▼ keys.

- To make width A wider, enter a positive value.
- To make width A narrower, enter a negative value.
- Adjustment range: +10 max. and -10 min. (1 increment: 0.5 mm)

9. Press the Menu/Select key.
10. Turn OFF the power switch, wait for 10 sec., then turn the switch ON.
11. Make a print and check the punch hole positions again.

B. Jig software

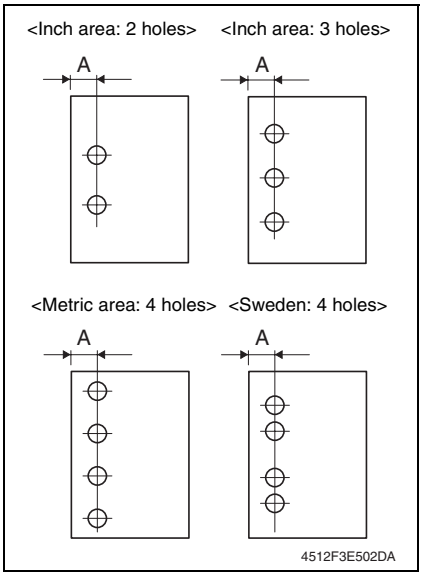

1. Set the printer into the hole punch mode and make a 1-sided print.
2. Measure width A on the print and check to see if the measured dimension falls within the specified range.
   <Inch area: 2 holes, 3 holes>
   Specifications: 9.5 ± 1.0 mm
   <Metric area: 4 holes>
   Specifications: 11 ± 1.0 mm
   <Sweden: 4 holes>
   Specifications: 11.5 ± 1.0 mm
3. If the measured width A outside the specified range, perform the following procedure to punch horizontal position adjustment.

4. Call the Service Mode to the screen.
5. Click [Finisher].
6. Click [CB-FN adjustment].
7. Click [Punch Horizontal Position].

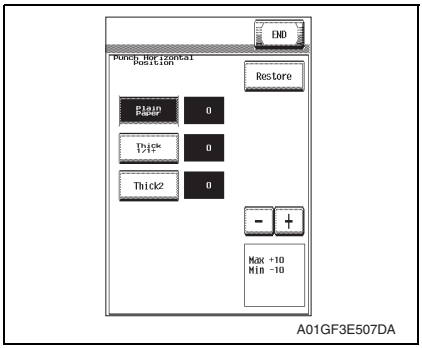

8. Set the correction value using the [+]/[-] keys.
   - To make width A wider, enter a positive value.
   - To make width A narrower, enter a negative value.
   - Adjustment range: +10 max. and -10 min. (1 increment: 0.5 mm)

9. Click two times [END].
10. Click [Exit] on the Service Mode screen.
11. Turn OFF the power switch, wait for 10 sec., then turn the switch ON.
12. Make a print and check the punch horizontal positions again.

7.4 Punch loop length adjustment (PK-515)

NOTE

This adjustment must be made in any of the following cases:

- **When a slant occurs in the punch hole position.**
- **When misfeed frequently occurs in punch hole mode.**

7.4.1 Control panel

1. Call the Service Mode to the screen.
   See P.228 of the main body service manual.
2. Select [Finisher Adjust] → [CB-FN Adjust] → [Finisher Adjust] → [Punch Reg. Loop].
3. Press the Menu/Select key.
4. Set the correction value using the ▲ or ▼ keys.

- Adjustment range: +4 max. and -4 min. (1 increment: 1 mm)
- To make loop length larger, enter a positive value.
- To make loop length smaller, enter a positive value.

5. Press the Menu/Select key.
6. Turn OFF the power switch, wait for 10 sec., then turn the switch ON.
7. Make a print again and check the deviance of punch hole position.

7.4.2 Jig Software

1. Call the Service Mode to the screen.
   See P.228 of the main body service manual.
2. Click [Finisher].
3. Click [CB-FN adjustment].
4. Click [Punch Regist Loop Size].

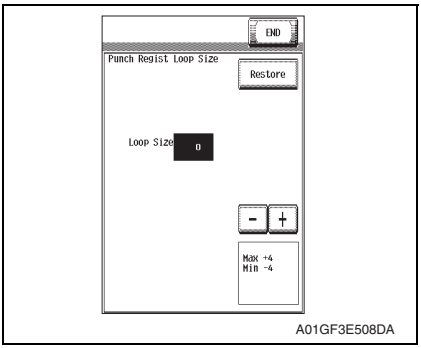

5. Set the correction value using the [-]/[+] keys.

- Adjustment range: +4 max. and -4 min. (1 increment: 1 mm)
- To make loop length larger, enter a positive value.
- To make loop length smaller, enter a positive value.

6. Click two times [END].
7. Click [Exit] on the Service Mode screen.
8. Turn OFF the power switch, wait for 10 sec., then turn the switch ON.
9. Make a print again and check the deviance of punch hole position.

7.5 Punch Option

7.5.1 Punch Kit type

Functions	• To set installation and model of the punch kit.
Use	• Use when the punch kit is installed.
Setting/ Procedure	• The default setting is Not Installed. "Not Installed" PK-501 PK-515 • Select the model of the punch kit currently installed.

7.5.2 # of Punch-Holes

Functions	• To set the number of holes to be made by the punch kit installed.
Use	• Use when the punch kit is installed.
Setting/ Procedure	• The default setting is 2-Hole. "2-Hole" SWE 4-Hole EU 4-Hole 2-Hole/3-Hole **NOTE** **• Select only the number of holes supported by the punch kit installed.**

8. Mechanical adjustment

8.1 Punch hole deviance adjustment (PK-515)

NOTE

Make this adjustment after any of the following procedures has been performed.

- **When the punch kit has been replaced.**
- **When the punch kit has been removed.**

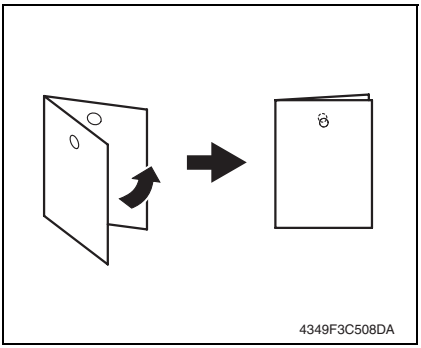

1. Set the printer into the hole punch mode and make a 1-sided print.
2. Fold the output paper in half and check whether the punch hole positions are aligned.
   Specification: 0 ± 2 mm
3. If the punch hole position is misaligned, adjust with the following procedure.

4. Remove the finisher unit right front cover.
See P.22

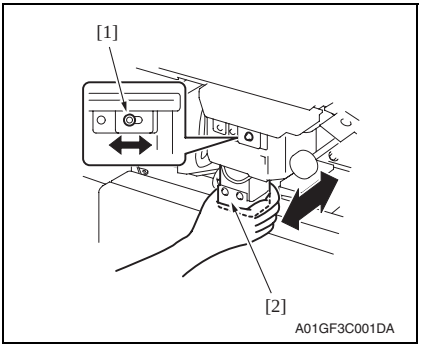

5. Loosen the adjustment screw [1], and move the punch unit [2] forward or backward to make the adjustment.
6. After the adjustment has been completed, tighten the adjusting screw.
7. Make a print and check the punch hole positions again.

8.2 Staple position adjustment

NOTE

Make this adjustment after any of the following procedures has been performed.

- **When the stapler has been replaced.**
- **When staple position is misaligned.**

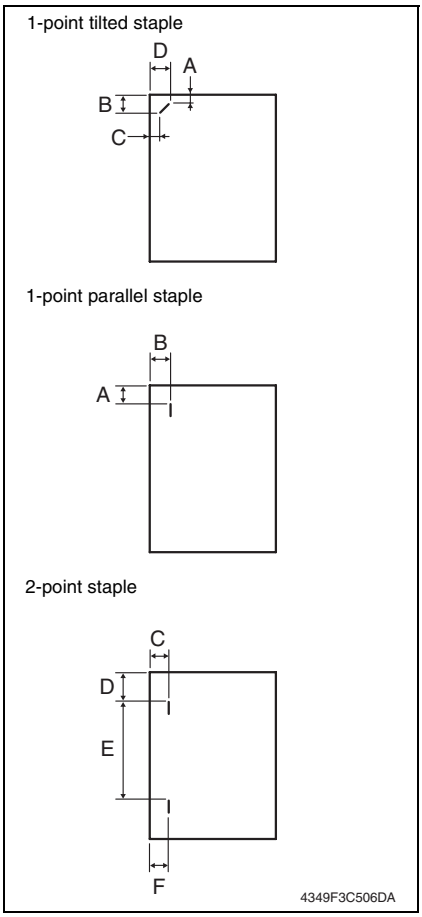

1. Set the staple mode and make a print.

2. Check the staple position of the paper.

- 1-point tilted staple
  (Paper width: 216 to 297 mm)
  279 to 297 mm: 45° tilt,
  B5, B4S: 30° tilt

Measurement position	Specification	Adjustment range
A	4.9 mm	-3 mm to +3 mm
B	10.1 mm	-4 mm to +4 mm
C	6.5 mm	-3 mm to +3 mm
D	16.2 mm	-4 mm to +4 mm

- 1-point parallel staple
  (Paper width: 182 to 216 mm)

Measurement position	Specification	Adjustment range
A	4.5 mm	-3 mm to +3 mm
B	6 mm	-4 mm to +4 mm

- 2-point staple

Measurement position	Specification	Adjustment range
C, F	6 mm	-4 mm to +4 mm
D	Y	-4 mm to +4 mm
E	X	-4 mm to +4 mm

Y = (paper width-X-11) / 2

X = A3, A4: 137
B4, B5: 114
A4S: 190
B5S: 162

Substitute above into the equation.

3. If the staple position is misaligned, adjust with the following procedure.

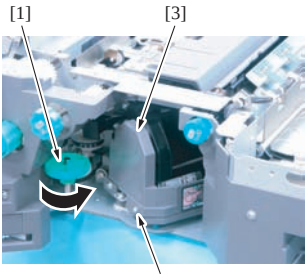

9J08F2C518DA

4. Open the front door.
5. Turn the dial [1], and move the stapler forward.
6. Loosen the screw [2], and remove the cover [3].

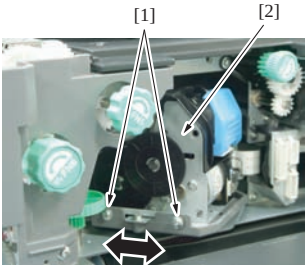

A01GF3C509DA

7. Loosen two adjustment screws [1] and move the stapler unit [2] in the direction of the arrow to make the adjustment.
8. Make another print and check the staple position.

8.3 Staple home position sensor position adjustment

NOTE

Make this adjustment after any of the following procedures has been performed.

- **When the stapler has been replaced.**
- **When staple position is misaligned.**

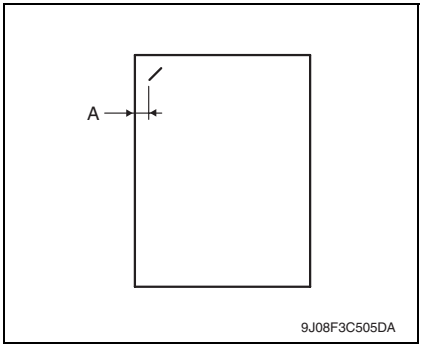

1. Set the staple mode and make a print.
2. Check the staple position of the paper.
   - 1-point tilted staple
     (Paper width: 216 to 297 mm)
     Specification A: 6.5 mm ± 1.5 mm
3. If the staple position does not fall within the specified range, make an adjustment as shown below.

4. Remove the tray unit.
See P.27

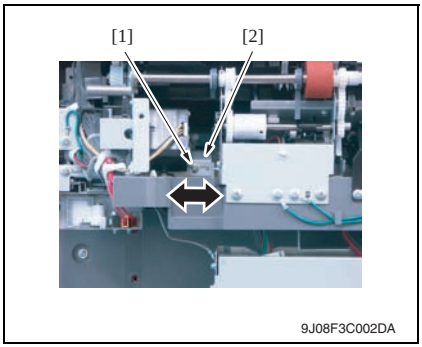

5. Loosen the screw [1] and make the adjustment by shifting stapler home sensor [2] in the direction of an arrow.

8.4 Adjustment of clearance between stapler and FD stopper

NOTE

Make this adjustment after any of the following procedures has been performed.

- **When stapler fails to move appropriately.**

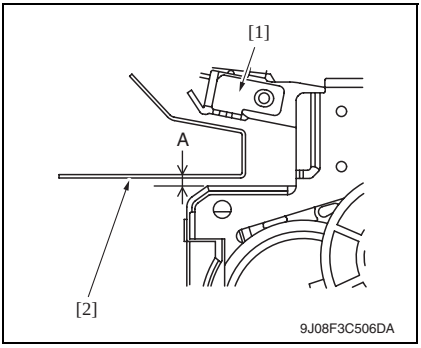

1. Check the clearance between the stapler unit [1] and the FD stopper [2] is within the specified range.
   Specification A: 2.0 mm ± 0.5 mm
2. If the value does not fall within the specified range, make the adjustment as shown below.

3. Remove the finisher unit.
   See P.30
4. Remove the finisher unit rear cover.
   See P.22

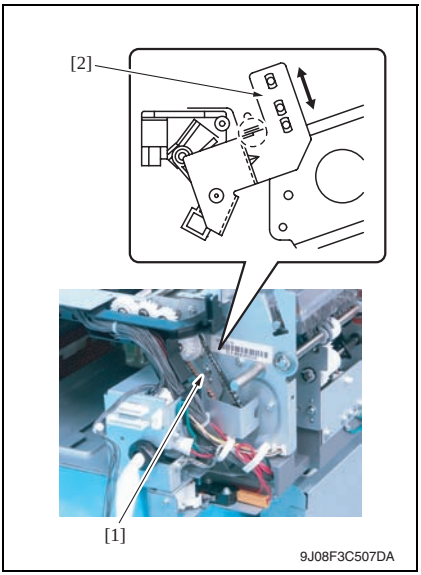

5. Loosen the screw [1] and move the mounting plate [2] to adjust.

Troubleshooting

9. Jam display

9.1 Misfeed display

- When a paper misfeed occurs, the LED line lights up red steadily and the misfeed message is displayed on the control panel of the machine.

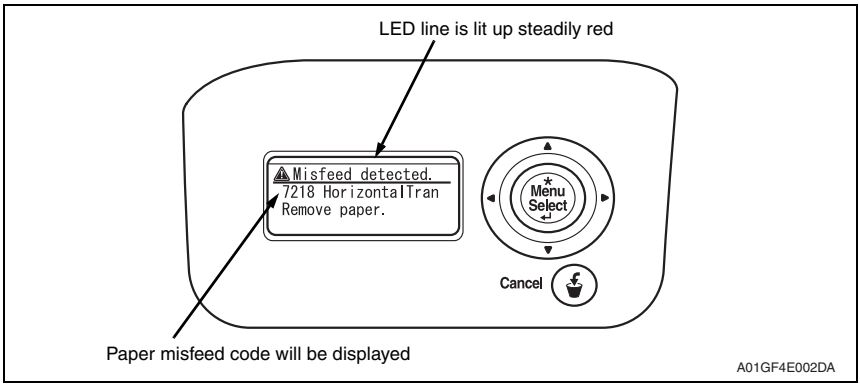

Code	Misfeed location	Misfeed processing location	Action
7218	Finisher transport section misfeed	Front door	P.78
7216	Finisher exit section misfeed	Front door	P.79
7221	Finisher bundle exit misfeed	Front door	P.79
7281	Finisher staple misfeed	Front door	P.80
7243	Finisher punch misfeed	Front door	P.80

9.1.1 Misfeed display resetting procedure

- Open the corresponding door, clear the sheet of paper misfed, and close the door.

9.2 Sensor layout

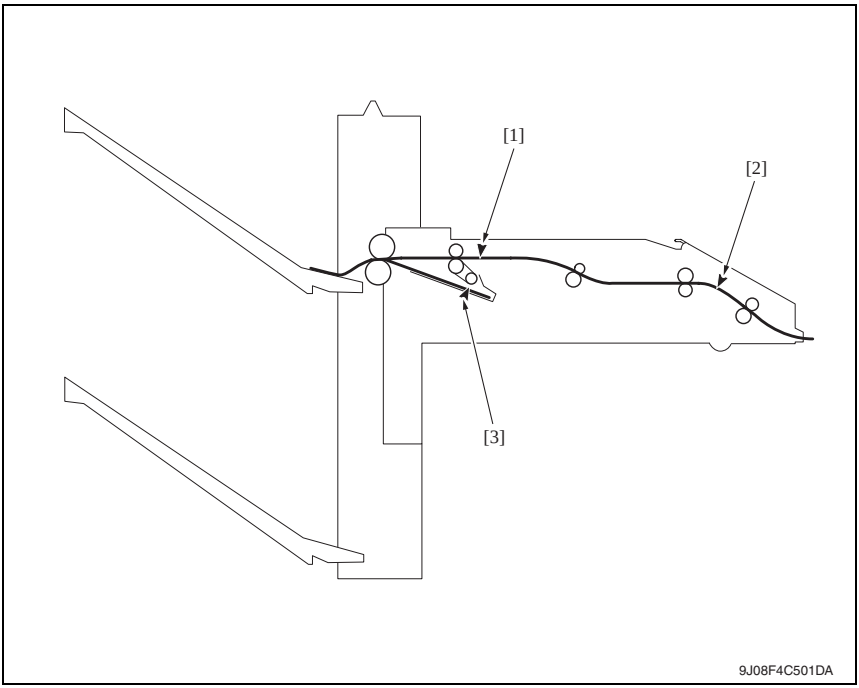

[1]	Transport sensor	PS2
[2]	Entrance sensor	PS1
[3]	Storage tray detect sensor	PS3

9.3 Solution

9.3.1 Initial check items

- When a paper misfeed occurs, first perform the following initial check items.

Check Item	Action
Does the paper meet product specifications?	Change the paper.
Is paper curled, wavy, or damp?	See "Solution when paper curl occurs" on P.77.
Is a foreign object present along the paper path, or is the paper path deformed or worn?	Clean or change the paper path.
Are the rolls/rollers dirty, deformed, or worn?	Clean or change the defective roll/roller.
Are the edge guide and trailing edge stop at the correct position to accommodate the paper?	Set as necessary.
Are the actuators found operational when checked for correct operation?	Correct or change the defective actuator.

9.3.2 Solution when paper curl occurs

Step	Check items/actions		
1	Turn over the stacked paper in the paper tray.	OK	—
		NG	Go to step 2.
2	Does paper curl occur just after a warm-up has been completed or the sleep mode has been turned OFF?	YES	Go to step 3.
	Does paper curl occur under normal conditions (under conditions other than those mentioned above)?	YES	Go to step 5.
3	*1.* Call the Service Mode to the screen. *2.* Select [System 1] → [Change Warm Up Time]. *3.* Change the setting to [Mode3]. See P.344 of the main body service manual.	OK	—
		NG	Go to step 4.
4	*1.* Call the Service Mode to the screen. *2.* Select [System 1] → [Change Warm Up Time]. *3.* Change the setting to [Mode4]. See P.344 of the main body service manual.	—	—
5	*1.* Call the Service Mode to the screen. *2.* Select [Machine] → [Fusing Temperature]. *3.* Select a paper type. *4.* Change the temperature of Heater Roller to [-10 °C]. See P.305 of the main body service manual.	OK	—
		NG	Go to step 6
6	*1.* Call the Service Mode to the screen. *2.* Select [Machine] → [Fusing Temperature]. *3.* Select a paper type. *4.* Change the temperature of Heater Roller to [-20 °C]. See P.305 of the main body service manual.	—	—

9.3.3 Transport section misfeed

A. Detection timing

Type	Description
Finisher transport section misfeed detection	The entrance sensor (PS1) is not turned ON even after the set period of time has elapsed after the printer's paper exit sensor (PS25) is turned ON by the paper.
	The entrance sensor (PS1) is not turned OFF even after the set period of time has elapsed after the printer's paper exit sensor (PS25) is turned OFF by the paper.
Finisher transport section misfeed detection	The entrance sensor (PS1) is turned ON when the power switch is set to ON, a door or cover is opened and closed, or a misfeed or malfunction is reset.
	The transport sensor (PS2) is turned ON when the power switch is set to ON, a door or cover is opened and closed, or a misfeed or malfunction is reset.

B. Action

Relevant electrical parts	
Paper exit sensor (PS25) Entrance sensor (PS1) Transport sensor (PS2)	FS control board (FSCB) MFP board (MFPB)

Step	Action	WIRING DIAGRAM	
		Control signal	Location (Electrical component)
1	Initial check items	—	—
2	PS25 I/O check, sensor check	—	—
3	PS1 I/O check, sensor check	FSCB PJ19FSCB-11 (ON)	FS-519 C-7
4	PS2 I/O check, sensor check	FSCB PJ19FSCB-14 (ON)	FS-519 C-7
5	Change FSCB	—	—
6	Change MFPB	—	—

9.3.4 Exit section misfeed

A. Detection timing

Type	Description
Finisher exit section misfeed detection	The transport sensor (PS2) is not turned ON even after the set period of time has elapsed after the entrance sensor (PS1) is turned ON by the paper.
	The transport sensor (PS2) is not turned OFF even after the set period of time has elapsed after the entrance sensor (PS1) is turned OFF by the paper.

B. Action

Relevant electrical parts	
Entrance sensor (PS1) Transport sensor (PS2)	FS control board (FSCB) MFP board (MFPB)

Step	Action	WIRING DIAGRAM	
		Control signal	Location (Electrical component)
1	Initial check items	—	—
2	PS1 I/O check, sensor check	FSCB PJ19FSCB-11 (ON)	FS-519 C-7
3	PS2 I/O check, sensor check	FSCB PJ19FSCB-14 (ON)	FS-519 C-7
4	Change FSCB	—	—
5	Change MFPB	—	—

9.3.5 Finisher bundle exit misfeed

A. Detection timing

Type	Description
Finisher bundle exit misfeed detection	The storage tray detect sensor (PS3) is not turned OFF even after the set period of time has elapsed after the exit motor (M4) is energized.

B. Action

Relevant electrical parts	
Storage tray detect sensor (PS3) Exit motor (M4)	FS control board (FSCB)

Step	Action	WIRING DIAGRAM	
		Control signal	Location (Electrical component)
1	Initial check items	—	—
2	PS3 I/O check, sensor check	FSCB PJ14FSCB-8 (ON)	FS-519 C-12
3	M4 operation check	FSCB PJ10FSCB-5 to 8	FS-519 C-3
4	Change FSCB	—	—

9.3.6 Finisher staple misfeed

A. Detection timing

Type	Description
Finisher staple misfeed detection	The staple home position sensor in the staple unit is not turned ON even after the set period of time has elapsed after the staple motor rotates forward, and then the staple motor rotates backward, and the staple home position sensor in the staple unit is turned ON within the set period of time.

B. Action

Relevant electrical parts	
Staple unit	FS control board (FSCB)

Step	Action	WIRING DIAGRAM	
		Control signal	Location (Electrical component)
1	Initial check items	—	—
2	Drive coupling section check	—	—
3	I/O check, sensor check	—	—
4	Change staple unit	—	—
5	Change FSCB	—	—

9.3.7 Finisher punch misfeed (PK-515)

A. Detection timing

Type	Description
Finisher punch misfeed detection	Punch positioning sensors 1 and 2 are not turned ON even after the set period of time has elapsed after the punch motor is energized.

B. Action

Relevant electrical parts	
Punch unit	FS control board (FSCB)

Step	Action	WIRING DIAGRAM	
		Control signal	Location (Electrical component)
1	Initial check items	—	—
2	Drive coupling section check	—	—
3	I/O check, sensor check	—	—
4	Change punch unit	—	—
5	Change FSCB	—	—

10. Malfunction code

10.1 Trouble code

- The machine's CPU performs a self-diagnostics function that, on detecting a malfunction, gives the corresponding malfunction code and maintenance call mark on the control panel.

Code	Description	Detection timing
C1004	FNS communication error	• When the FS control board (FSCB) is receiving data, a communication error is detected.
C1183	Elevator motor ascent/ descent drive failure	• The elevator tray lower limit sensor (PS13) is not turned ON even after the set period of time has elapsed after the power switch is set to ON. • The elevator tray home position sensor (PS11) and elevator top face detection sensor (PS12) are not turned ON even after the set period of time has elapsed after the elevator motor (M11) is energized. • The elevator tray does not stop at the position for the specified tray after the elevator motor (M11) is energized (beginning of descent operation) and the elevator tray lower limit sensor (PS13) is turned ON. • The elevator top face detection sensor (PS12) is not turned ON even after the set period of time has elapsed after the elevator motor (M11) is energized (beginning of ascent operation) when paper is being fed out.
C1190	Aligning plate 1 drive failure	• The alignment home position sensor/1 (PS7) is not turned ON even after the set period of time has elapsed after the power switch is set to ON. • The alignment home position sensor/1 (PS7) is not turned OFF even after the set period of time has elapsed after the align motor/1 (M5) is energized.
C1191	Aligning plate 2 drive failure	• The alignment home position sensor/2 (PS8) is not turned ON even after the set period of time has elapsed after the power switch is set to ON. • The alignment home position sensor/2 (PS8) is not turned OFF even after the set period of time has elapsed after the align motor/2 (M6) is energized.
C11A0	Paper holding drive failure	• The exit paddle home position sensor (PS6) is not turned ON even after the set period of time has elapsed after the exit paddle solenoid (SD2) is activated (beginning of paddle retraction operation). • The exit paddle home position sensor (PS6) is not turned OFF even after the set period of time has elapsed after the exit paddle solenoid (SD2) is activated (beginning of paddle paper-holding operation).
C11A1	Exit roller pressure/ retraction failure	• The exit roller home position sensor (PS5) is not turned ON even after the set period of time has elapsed after the exit roller motor (M10) is energized (beginning of pressure operation). • The exit roller home position sensor (PS5) is not turned OFF even after the set period of time has elapsed after the exit roller motor (M10) is energized (beginning of retraction operation).

Code	Description	Detection timing
C11A3	Shutter drive failure	• The shutter home position sensor (PS14) is not turned OFF even after the set period of time has elapsed after the shutter motor (M8) is energized (beginning of shutter-opening operation). • The shutter home position sensor (PS14) is not turned ON even after the set period of time has elapsed after the shutter motor (M8) is energized (beginning of shutter-closing operation).
C11B0	Staple unit CD drive failure	• The staple home position sensor (PS9) is not turned ON even after the set period of time has elapsed after the stapling unit moving motor (M7) is energized (beginning of return operation to predetermined position).
C11B2	Staple drive failure	• The home position sensor is not turned ON even after the set period of time has elapsed after the staple motor is energized (beginning of staple operation).
C11C0	Punch cam motor unit failure	• The punch home position sensor (PS600) is not turned ON even after the set period of time has elapsed while the punch motor (M99) is energized.
C1301	Finishing option cooling fan motor failure	• The cooling fan motor (FM9) lock signal remains set to H for a set period of time while the cooling fan motor (FM9) is turning. • The cooling fan motor (FM9) lock signal remains set to L for a set period of time while the cooling fan motor (FM9) remains stopped.
CC155	Finisher ROM failure	• Data of flash ROM of the finishing options is determined to be faulty when the power is turned ON.

10.2 Solution

10.2.1 C1004: FNS communication error

Relevant electrical parts	
FS control board (FSCB)	

Step	Action	WIRING DIAGRAM	
		Control signal	Location (Electrical component)
1	Disconnect and then connect the power cord. Turn OFF the power switch, wait for 10 sec. or more, and turn ON the power switch.	—	—
2	Rewrite firmware using the compact flash card.	—	—
3	Change FSCB	—	—

10.2.2 C1183: Elevator motor ascent/descent drive failure

Relevant electrical parts	
Elevator motor (M11) Elevator tray home position sensor (PS11) Elevator tray lower limit sensor (PS13)	Elevator top face detection sensor (PS12) Relay board/1 (REYB/1) FS control board (FSCB)

Step	Action	WIRING DIAGRAM	
		Control signal	Location (Electrical component)
1	Check the M11 connector for proper connection and correct as necessary.	—	—
2	Check M11 for proper drive coupling and correct as necessary.	—	—
3	If OT-602 is connected, check the connector for proper connection, and correct as necessary.	—	—
4	Check the installation position of the OT-602 tray, and correct as necessary.	—	—
5	M11 operation check	FSCB PJ6FSCB-5 to 6	FS-519 J-4
6	PS11 I/O check, sensor check	FSCB PJ18FSCB-6 (ON)	FS-519 L-3
7	PS13 I/O check, sensor check	FSCB PJ18FSCB-3 (ON)	FS-519 L-4
8	PS12 I/O check, sensor check	FSCB PJ18FSCB-4 (ON)	FS-519 L-3
9	Change REYB/1	—	—
10	Change FSCB	—	—

10.2.3 C1190: Aligning plate 1 drive failure

10.2.4 C1191: Aligning plate 2 drive failure

Relevant electrical parts	
Align motor/1 (M5) Align motor/2 (M6) Alignment home position sensor/1 (PS7) Alignment home position sensor/2 (PS8)	FS control board (FSCB)

• C1190

Step	Action	WIRING DIAGRAM	
		Control signal	Location (Electrical component)
1	Check the M5 connector for proper connection and correct as necessary.	—	—
2	Check M5 for proper drive coupling and correct as necessary.	—	—
3	M5 operation check	FSCB PJ11FSCB-1 to 4	FS-519 C-10
4	PS7 I/O check, sensor check	FSCB PJ14FSCB-3 (ON)	FS-519 C-11
5	Change FSCB	—	—

• C1191

Step	Action	WIRING DIAGRAM	
		Control signal	Location (Electrical component)
1	Check the M6 connector for proper connection and correct as necessary.	—	—
2	Check M6 for proper drive coupling and correct as necessary.	—	—
3	M6 operation check	FSCB PJ11FSCB-5 to 8	FS-519 C-11
4	PS8 I/O check, sensor check	FSCB PJ14FSCB-6 (ON)	FS-519 C-11
5	Change FSCB	—	—

10.2.5 C11A0: Paper holding drive failure

Relevant electrical parts	
Exit paddle solenoid (SD2) Exit paddle home position sensor (PS6)	FS control board (FSCB)

Step	Action	WIRING DIAGRAM	
		Control signal	Location (Electrical component)
1	Check the SD2 connector for proper connection and correct as necessary.	—	—
2	PS6 I/O check, sensor check	FSCB PJ13FSCB-11 (ON)	FS-519 C-4
3	SD2 operation check	FSCB PJ13FSCB-2 (REM)	FS-519 C-5
4	Change FSCB	—	—

10.2.6 C11A1: Exit roller pressure/retraction failure

Relevant electrical parts	
Exit roller motor (M10) Exit roller home position sensor (PS5)	FS control board (FSCB)

Step	Action	WIRING DIAGRAM	
		Control signal	Location (Electrical component)
1	Check the M10 connector for proper connection and correct as necessary.	—	—
2	Check M10 for proper drive coupling and correct as necessary.	—	—
3	M10 operation check	FSCB PJ12FSCB-8 to 9	FS-519 C-9
4	PS5 I/O check, sensor check	FSCB PJ19FSCB-3 (ON)	FS-519 C-8
5	Change FSCB	—	—

10.2.7 C11A3: Shutter drive failure

Relevant electrical parts	
Shutter motor (M8) Shutter home position sensor (PS14)	Relay board/1 (REYB/1) FS control board (FSCB)

Step	Action	WIRING DIAGRAM	
		Control signal	Location (Electrical component)
1	Check the M8 connector for proper connection and correct as necessary.	—	—
2	Check M8 for proper drive coupling and correct as necessary.	—	—
3	M8 operation check	FSCB PJ6FSCB-7 to 8	FS-519 J-5
4	PS14 I/O check, sensor check	FSCB PJ18FSCB-5 (ON)	FS-519 J-5
5	Change REYB/1	—	—
6	Change FSCB	—	—

10.2.8 C11B0: Staple unit CD drive failure

Relevant electrical parts	
Stapling unit moving motor (M7) Staple home position sensor (PS9)	FS control board (FSCB)

Step	Action	WIRING DIAGRAM	
		Control signal	Location (Electrical component)
1	Check for interference with the shutter and exit roller, and correct as necessary.	—	—
2	Check the M7 connector for proper connection and correct as necessary.	—	—
3	Check M7 for proper drive coupling and correct as necessary.	—	—
4	M7 operation check	FSCB PJ10FSCB-1 to 4	FS-519 C-3 to 4
5	PS9 I/O check, sensor check	FSCB PJ13FSCB-5 (ON)	FS-519 C-4 to 5
6	Change FSCB	—	—

10.2.9 C11B2: Staple drive failure

Relevant electrical parts	
Staple unit	FS control board (FSCB)

Step	Action	WIRING DIAGRAM	
		Control signal	Location (Electrical component)
1	Check the staple unit connector for proper connection and correct as necessary.	—	—
2	Check the staple unit for proper drive coupling, and correct as necessary.	—	—
3	Staple unit operation check	—	—
4	Change staple unit	—	—
5	Change FSCB	—	—

10.2.10 C11C0: Punch cam motor unit failure

Relevant electrical parts	
Punch unit	FS control board (FSCB)

Step	Action	WIRING DIAGRAM	
		Control signal	Location (Electrical component)
1	Check the punch unit connectors for proper connection, and correct as necessary.	—	—
2	Check the punch unit for proper drive coupling, and correct as necessary.	—	—
3	Punch unit I/O check, sensor check	—	—
4	Change punch unit	—	—
5	Change FSCB	—	—

10.2.11 C1301: Finishing option cooling fan motor failure

Relevant electrical parts	
Cooling fan motor (FM9)	FS control board (FSCB)

Step	Action	WIRING DIAGRAM	
		Control signal	Location (Electrical component)
1	Check the FM9 connector for proper connection and correct as necessary.	—	—
2	Check FM9 for proper drive coupling and correct as necessary.	—	—
3	Check the FSCB connectors for proper connection, and correct as necessary.	—	—
4	FM9 operation check	FSCB PJ12FSCB-3	FS-519 C-10
5	Change FSCB	—	—

10.2.12 CC155: Finisher ROM failure

Relevant electrical parts	
FS control board (FSCB)	

Step	Action	WIRING DIAGRAM	
		Control signal	Location (Electrical component)
1	Disconnect and then connect the power cord. Turn OFF the power switch, wait for 10 sec. or more, and turn ON the power switch.	—	—
2	Rewrite firmware using the compact flash card.	—	—
3	Change FSCB	—	—

KONICA MINOLTA

SERVICE MANUAL

FIELD SERVICE

MT-502

Revision history

After publication of this service manual, the parts and mechanism may be subject to change for improvement of their performance.
Therefore, the descriptions given in this service manual may not coincide with the actual machine.

When any change has been made to the descriptions in the service manual, a revised version will be issued with a revision mark added as required.

Revision mark:

- To indicate clearly a section revised, show to the left of the revised section.
  A number within represents the number of times the revision has been made.

- To indicate clearly a section revised, show in the lower outside section of the corresponding page.
  A number within represents the number of times the revision has been made.

NOTE

Revision marks shown in a page are restricted only to the latest ones with the old ones deleted.

- When a page revised in Ver. 2.0 has been changed in Ver. 3.0:
  The revision marks for Ver. 3.0 only are shown with those for Ver. 2.0 deleted.
- When a page revised in Ver. 2.0 has not been changed in Ver. 3.0:
  The revision marks for Ver. 2.0 are left as they are.

Date	Service manual Ver.	Revision mark	Descriptions of revision
2007/10	1.0	—	Issue of the first edition

CONTENTS

MT-502

General

1. Product specification 1
2. Paper path 2

Maintenance

3. Other 3
3.1 Disassembly/adjustment prohibited items 3
3.2 Disassembly/Assembly/Cleaning list (Other parts) 4
3.2.1 Disassembly/Assembly parts list 4
3.2.2 Cleaning parts list 4
3.3 Disassembly/Assembly procedure 4
3.3.1 Rear cover/Right door 4
3.3.2 Front cover/Upper cover/Paper output tray 5
3.4 Cleaning procedure 5
3.4.1 Cleaning of the roller and roll 5

Adjustment/Setting

4. How to use the adjustment section 7
5. Sensor check 8
5.1 Check procedure 8
5.1.1 Sensor check screen 8
5.1.2 Sensor check list 9
6. Finisher operations 10
6.1 Entering Finisher Check 10
6.2 Finisher Check modes 10

Troubleshooting

7. Jam display 11
7.1 Misfeed display 11
7.1.1 Misfeed display resetting procedure 11
7.2 Sensor layout 12
7.3 Solution 13
7.3.1 Initial check items 13
7.3.2 Solution when paper curl occurs 13
7.3.3 Transport section misfeed 14

General

1. Product specification

A. Type

Name	Mailbin kit	
Installation	Install at the top section of the finisher elevator tray.	
Number of bins	4 bins	
Number of sheets stored per bin	125 sheets (Total 500 sheets) (90 g/m^2, 24 lb)	
Storable paper	Plain paper	60 to 90 g/m^2 (16 to 24 lb)
	Recycled paper	
Storable paper size	Metric area	A5S, B5, A4
	Inch area	5-$^1/_2$ x 8-$^1/_2$S, 8-$^1/_2$ x 11

B. Machine specifications

Power requirements	DC 24 V (Supplied from the finisher) DC 5 V (Generated inside the mail bin)
Dimensions	340 mm (W) x 509 mm (D) x 387 mm (H) 13.5 inch (W) x 20 inch (D) x 15.25 inch (H)
Weight	8.0 kg (17.75 lb)

C. Operating environment

- Conforms to the operating environment of the main body.

NOTE

- **These specifications are subject to change without notice.**

2. Paper path

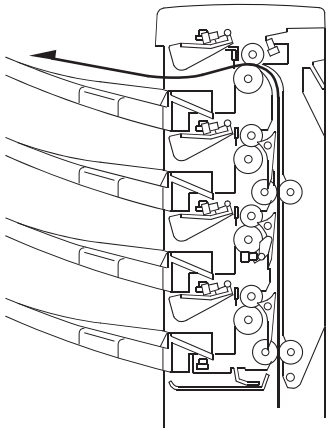

4510T2C501AA

Maintenance

3. Other

3.1 Disassembly/adjustment prohibited items

A. Paint-locked screws

NOTE

- **To prevent loose screws, a screw lock in blue or green series color is applied to the screws.**
- **The screw lock is applied to the screws that may get loose due to the vibrations and loads created by the use of machine or due to the vibrations created during transportation.**
- **If the screw lock coated screws are loosened or removed, be sure to apply a screw lock after the screws are tightened.**

B. Red-painted screws

NOTE

- **The screws which are difficult to be adjusted in the field are painted in red in order to prevent them from being removed by mistake.**
- **Do not remove or loosen any of the red-painted screws in the field. It should also be noted that, when two or more screws are used for a single part, only one representative screw may be marked with the red paint.**

C. Variable resistors on board

NOTE

- **Do not turn the variable resistors on boards for which no adjusting instructions are given in Adjustment/Setting.**

D. Removal of PWBs

⚠ CAUTION

- **When removing a circuit board or other electrical component, refer to "Handling of PWBs" and follow the corresponding removal procedures.**
- **The removal procedures given in the following omit the removal of connectors and screws securing the circuit board support or circuit board.**
- **Where it is absolutely necessary to touch the ICs and other electrical components on the board, be sure to ground your body.**

3.2 Disassembly/Assembly/Cleaning list (Other parts)

3.2.1 Disassembly/Assembly parts list

No.	Section	Part name	Ref. page
1	Exterior parts	Rear cover	P.4
2		Front cover	P.5
3		Upper cover	P.5
4		Right door	P.4
5		Paper output tray	P.5

3.2.2 Cleaning parts list

No.	Section	Part name	Ref. page
1	Exit section	Roller and roll	P.5

3.3 Disassembly/Assembly procedure

3.3.1 Rear cover/Right door

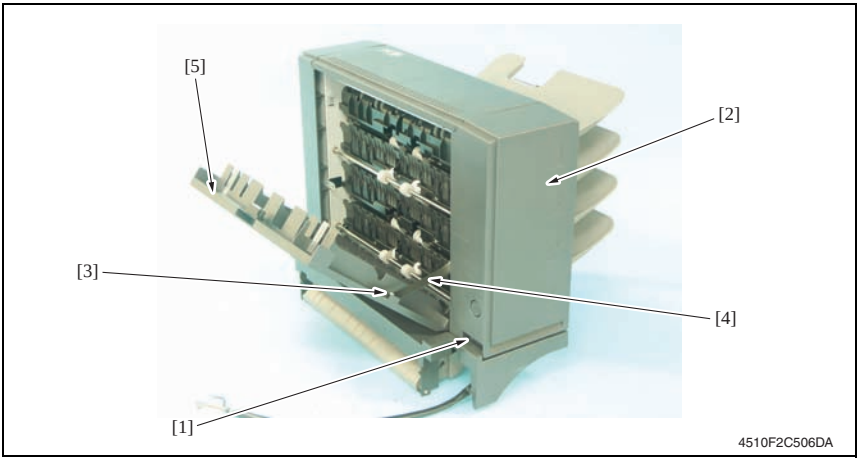

1. Remove the screw [1] and remove the rear cover [2].
2. Remove the screw [3], the stopper [4], and remove the right door [5].

3.3.2 Front cover/Upper cover/Paper output tray

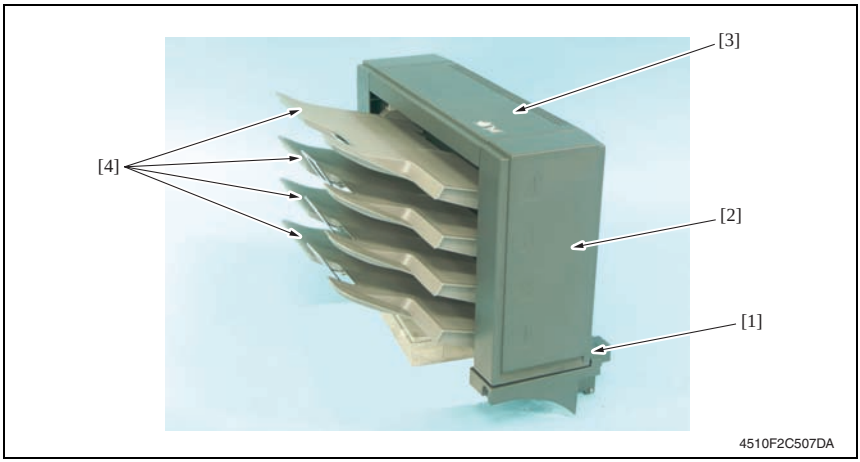

1. Remove the screw [1] and remove the front cover [2].
2. Remove the rear cover.
See P.4
3. Remove the upper cover [3].
4. Remove the paper output trays [4].

3.4 Cleaning procedure

NOTE

- **The alcohol described in the cleaning procedure of maintenance represents the isopropyl alcohol.**

3.4.1 Cleaning of the roller and roll

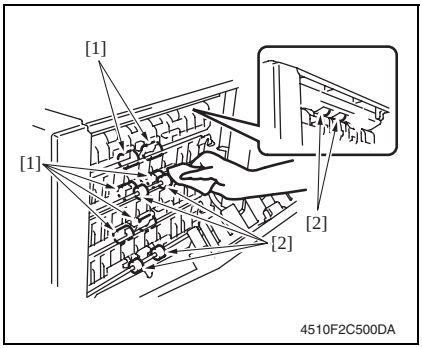

1. Open the right door.
2. Using a cleaning pad dampened with alcohol, wipe the roller [1] and roll [2].

Blank Page

Adjustment/Setting

4. How to use the adjustment section

- "Adjustment/Setting" contains detailed information on the adjustment items and procedures for this machine.
- Throughout this "Adjustment/Setting," the default settings are indicated by " ".

Advance checks

Before attempting to solve the customer problem, the following advance checks must be made. Check to see if:

- The power supply voltage meets the specifications.
- The power supply is properly grounded.
- The machine shares the power supply with any other machine that draws large current intermittently (e.g., elevator and air conditioner that generate electric noise).
- The installation site is environmentally appropriate: high temperature, high humidity, direct sunlight, ventilation, etc.; levelness of the installation site.
- The defective image attributes to the data itself which is sent from the PC to the printer.
- The density is properly selected.
- Correct paper is being used for printing.
- The units, parts, and supplies used for printing (developer, PC drum, etc.) are properly replenished and replaced when they reach the end of their useful service life.
- Toner is not running out.

⚠ CAUTION

- **To unplug the power cord of the machine before starting the service job procedures.**
- **If it is unavoidably necessary to service the machine with its power turned ON, use utmost care not to be caught in the scanner cables or gears of the exposure unit.**
- **Special care should be used when handling the fusing unit which can be extremely hot.**
- **The developing unit has a strong magnetic field. Keep watches and measuring instruments away from it.**
- **Take care not to damage the PC drum with a tool or similar device.**
- **Do not touch IC pins with bare hands.**

5. Sensor check

5.1 Check procedure

A. Procedure

1. Call the Service Mode to the screen.
   See P.228 of the main body service manual.
2. Click [State Confirmation].
3. Click [Sensor Check].
4. Click three times [▼].

5.1.1 Sensor check screen

- This is only typical screen which may be different from what are shown on each individual main body.

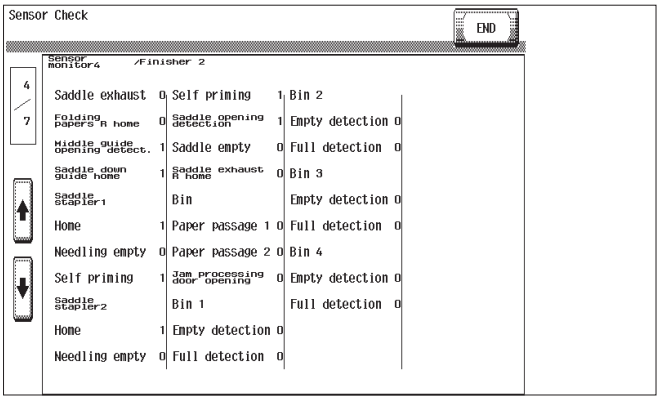

4510F3E002DA

5.1.2 Sensor check list

Symbol	Panel display		Part/signal name	Operation characteristics/ panel display	
				1	0
PS10	Bin	Paper Passage 1	Lower transport sensor	Paper present	Paper not present
PS9		Paper Passage 2	Upper transport sensor	Paper present	Paper not present
PS11		Door (Jam)	Cover open/close sensor	Open	Close
PS1	Bin1	Empty	Paper detection sensor 1	Paper not present	Paper present
PS5		Full	Paper full detection sensor 1	Blocked	Unblocked
PS2	Bin2	Empty	Paper detection sensor 2	Paper not present	Paper present
PS6		Full	Paper full detection sensor 2	Blocked	Unblocked
PS3	Bin3	Empty	Paper detection sensor 3	Paper not present	Paper present
PS7		Full	Paper full detection sensor 3	Blocked	Unblocked
PS4	Bin4	Empty	Paper detection sensor 4	Paper not present	Paper present
PS8		Full	Paper full detection sensor 4	Blocked	Unblocked

6. Finisher operations

6.1 Entering Finisher Check

1. Call the Service Mode to the screen.
   See P.228 of the main body service manual.
2. Click [Finisher].
3. Click [CB-FN adjustment].
4. Click [Finisher Check].
5. Click [Bin SL Drive].

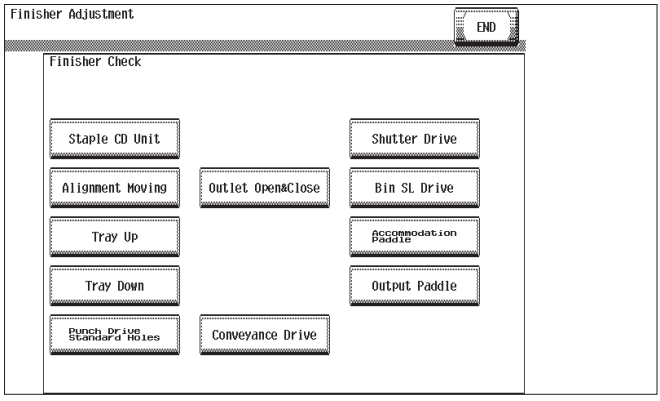

4510F3E516DA

6.2 Finisher Check modes

A. Mail bin solenoid drive mode

- Bin entrance switching solenoids 1, 2 and 3 switch, in order, at the predetermined times.
  → Bin entrance switching solenoid 1 (SD1) activates for the predetermined time.
  — Bin entrance switching solenoid 2 (SD2) activates for the predetermined time.
  → Bin entrance switching solenoid 3 (SD3) activates for the predetermined time.
  → All bin entrance switching solenoids deactivate.
  → The operation is finished.

Troubleshooting

7. Jam display

7.1 Misfeed display

- When a paper misfeed occurs, the LED line lights up red steadily and the misfeed message is displayed on the control panel of the machine.

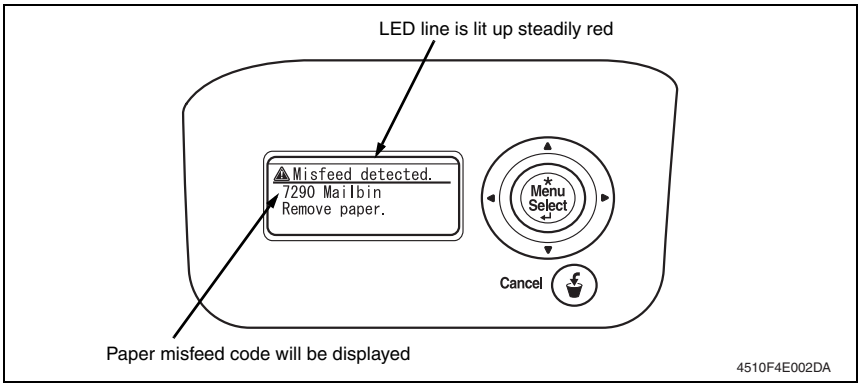

Code	Misfeed location	Misfeed access location	Action
7290	Vertical transport section	Right door	P.14

7.1.1 Misfeed display resetting procedure

- Open the corresponding door, clear the sheet of paper misfed, and close the door.

7.2 Sensor layout

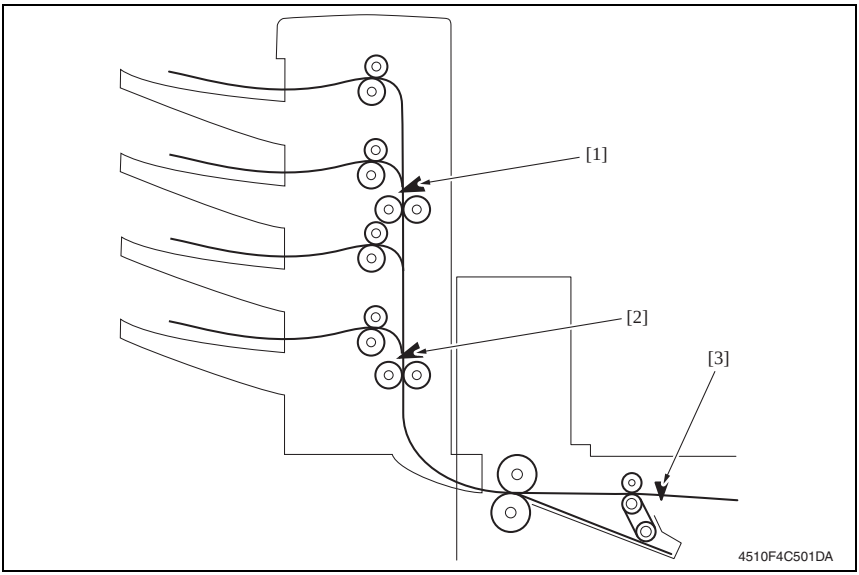

[1]	Upper transport sensor	PS9
[2]	Lower transport sensor	PS10
[3]	Transport sensor	PS2

7.3 Solution

7.3.1 Initial check items

- When a paper misfeed occurs, first perform the following initial check items.

Check Item	Action
Does the paper meet product specifications?	Change the paper.
Is paper curled, wavy, or damp?	See “Solution when paper curl occurs” on P.13.
Is a foreign object present along the paper path, or is the paper path deformed or worn?	Clean or change the paper path.
Are the rolls/rollers dirty, deformed, or worn?	Clean or change the defective roll/roller.
Are the edge guide and trailing edge stop at the correct position to accommodate the paper?	Set as necessary.
Are the actuators found operational when checked for correct operation?	Correct or change the defective actuator.

7.3.2 Solution when paper curl occurs

Step	Check items/actions		
1	Turn over the stacked paper in the paper tray.	OK	—
		NG	Go to step 2.
2	Does paper curl occur just after a warm-up has been completed or the sleep mode has been turned OFF?	YES	Go to step 3.
	Does paper curl occur under normal conditions (under conditions other than those mentioned above)?	YES	Go to step 5.
3	*1.* Call the Service Mode to the screen. *2.* Select [System 1] → [Change Warm Up Time]. *3.* Change the setting to [Mode3]. See P.344 of the main body service manual.	OK	—
		NG	Go to step 4.
4	*1.* Call the Service Mode to the screen. *2.* Select [System 1] → [Change Warm Up Time]. *3.* Change the setting to [Mode4]. See P.344 of the main body service manual.	—	—
5	*1.* Call the Service Mode to the screen. *2.* Select [Machine] → [Fusing Temperature]. *3.* Select a paper type. *4.* Change the temperature of Heater Roller to [-10 °C]. See P.305 of the main body service manual.	OK	—
		NG	Go to step 6
6	*1.* Call the Service Mode to the screen. *2.* Select [Machine] → [Fusing Temperature]. *3.* Select a paper type. *4.* Change the temperature of Heater Roller to [-20 °C]. See P.305 of the main body service manual.	—	—

7.3.3 Transport section misfeed

A. Detection timing

Type	Description
Transport section misfeed detection	The lower transport sensor (PS10) is not turned ON even after the set period of time has elapsed after the transport sensor (PS2) is turned ON by the paper.
	The upper transport sensor (PS9) is not turned ON even after the set period of time has elapsed after the lower transport sensor (PS10) is turned ON by the paper.
Detection of paper remaining in the transport section	The lower transport sensor (PS10) is turned ON when the power switch is set to ON, a door or cover is opened and closed, or a misfeed or malfunction is reset.
	The upper transport sensor (PS9) is turned ON when the power switch is set to ON, a door or cover is opened and closed, or a misfeed or malfunction is reset.

B. Action

Relevant electrical parts	
Transport sensor (PS2) Lower transport sensor (PS10) Upper transport sensor (PS9)	MT control board (MTCB)

Step	Action	WIRING DIAGRAM	
		Control signal	Location (Electrical components)
1	Initial checks	—	—
2	PS2 I/O check, sensor check	FSCB PJ19FSCB-14 (ON)	FS-519 C-7
3	PS10 I/O check, sensor check	MTCB CN102MTCB-8 (ON)	MT-502 B to C-4
4	PS9 I/O check, sensor check	MTCB CN101MTCB-8 (ON)	MT-502 B to C-3
5	MTCB replacement	—	—

KONICA MINOLTA

SERVICE MANUAL

FIELD SERVICE

SD-505

Revision history

After publication of this service manual, the parts and mechanism may be subject to change for improvement of their performance.
Therefore, the descriptions given in this service manual may not coincide with the actual machine.

When any change has been made to the descriptions in the service manual, a revised version will be issued with a revision mark added as required.

Revision mark:

- To indicate clearly a section revised, show to the left of the revised section.
  A number within represents the number of times the revision has been made.

- To indicate clearly a section revised, show in the lower outside section of the corresponding page.
  A number within represents the number of times the revision has been made.

NOTE

Revision marks shown in a page are restricted only to the latest ones with the old ones deleted.

- When a page revised in Ver. 2.0 has been changed in Ver. 3.0:
  The revision marks for Ver. 3.0 only are shown with those for Ver. 2.0 deleted.
- When a page revised in Ver. 2.0 has not been changed in Ver. 3.0:
  The revision marks for Ver. 2.0 are left as they are.

Date	Service manual Ver.	Revision mark	Descriptions of revision
2007/10	1.0	—	Issue of the first edition

CONTENTS

SD-505

General

1. Product specification 1
2. Paper path 2

Maintenance

3. Service tool 3
3.1 CE tool list 3
4. Other 4
4.1 Disassembly/adjustment prohibited items 4
4.2 Disassembly/Assembly/Cleaning list (other parts) 5
4.2.1 Disassembly/Assembly parts list 5
4.2.2 Cleaning parts list 5
4.3 Disassembly/Assembly procedure 5
4.3.1 Paper output tray/front cover 5
4.3.2 Rear cover 6
4.3.3 Upper cover 6
4.3.4 Saddle unit 7
4.3.5 Crease unit 9
4.3.6 Stapler unit 11
4.3.7 In & out guide motor 15
4.3.8 Crease roller 17
4.4 Cleaning procedure 24
4.4.1 Cleaning of the rollers and rolls 24

Adjustment/Setting

5. How to use the adjustment section 25
6. Sensor check 26
6.1 Check procedure 26
6.1.1 Sensor check screen 26
6.1.2 Sensor check list 27
7. Finisher operations 28
7.1 Entering Finisher Check 28
7.2 Finisher Check modes 29
7.3 Fold & Staple Pos. Adjustment 30

7.3.1 Control panel 30
7.3.2 Jig Software 31
7.4 Center Staple Position Adjustment 33
7.4.1 Control panel 33
7.4.2 Jig software 34
8. Mechanical adjustment 36
8.1 Fold Angle Adjustment 36
8.2 Center Staple Angle Adjustment 37

Troubleshooting

9. Jam display 39
9.1 Misfeed display 39
9.2 Sensor layout 39
9.3 Solution 40
9.3.1 Initial check items 40
9.3.2 Solution when paper curl occurs 40
9.3.3 Paper bundle exit misfeed 41
9.3.4 Staple unit 1 misfeed/Staple unit 2 misfeed 42
9.3.5 Creasing section misfeed 43
10. Malfunction code 44
10.1 Trouble code 44
10.2 Solution 45
10.2.1 C11A2: Saddle exit roller pressure/retraction failure 45
10.2.2 C11A4: Saddle exit motor failure 45
10.2.3 C11A5: Saddle in & out guide motor failure 46
10.2.4 C11A6: Saddle layable guide drive failure 46
10.2.5 C11B5: Side staple 1 drive failure 47
10.2.6 C11B6: Side staple 2 drive failure 47
10.2.7 C11D0: Crease motor drive failure 47

General

1. Product specification

A. Type

Name	Saddle sticher SD-505
Type	Built into the finisher
Installation	Screwed to the finisher
Document alignment	Center
Stapling function	Center parallel two points No. of sheets to be stapled together: 2 to 15

B. Paper

Type	Plain paper	60 g/m^2 to 90 g/m^2 16 to 24 lb
	Recycled paper	
	Thick paper	91 g/m^2 to 209 g/m^2 24.25 to 55.5 lb
Size	B5S to A3 8-$^1/_2$ x 11S to 11 x 17	
Capacity	200 sheets or 20 prints	

C. Machine specifications

Power requirements		DC 24 V (supplied from the finisher) DC 5 V
Max. power consumption		9.5 W or less
Dimensions	Crease unit	48 mm (W) x 399 mm (D) x 121 mm (H) 2 inch (W) x 15.75 inch (D) x 4.75 inch (H)
	Saddle unit	445 mm (W) x 478 mm (D) x 203 mm (H) 17.5 inch (W) x 18.75 inch (D) x 8 inch (H) 576 mm (W) x 478 mm (D) x 281 mm (H) *1 22.75 inch (W) x 18.75 inch (D) x 11 inch (H) *1
Weight	Crease unit	1.9 kg (0.5 lb)
	Saddle unit	7.4 kg (2.0 lb)

*1: Size when the paper output tray is pulled out

D. Operating environment

- Conforms to the operating environment of the main body.

E. Consumables

- Staples 2000 (MS-2C) x 2

NOTE

- **These specifications are subject to change without notice.**

2. Paper path

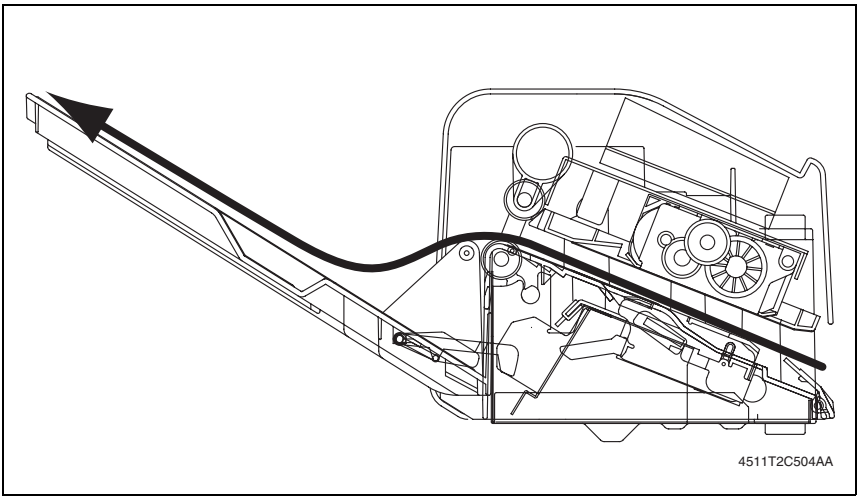

Maintenance

3. Service tool

3.1 CE tool list

Tool name	Shape	Personnel	Parts No.	Remarks
Stapler unit positioning jig	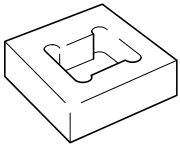	1	4511-7901-01	

4. Other

4.1 Disassembly/adjustment prohibited items

A. Paint-locked screws

NOTE

- **To prevent loose screws, a screw lock in blue or green series color is applied to the screws.**
- **The screw lock is applied to the screws that may get loose due to the vibrations and loads created by the use of machine or due to the vibrations created during transportation.**
- **If the screw lock coated screws are loosened or removed, be sure to apply a screw lock after the screws are tightened.**

B. Red-painted screws

NOTE

- **The screws which are difficult to be adjusted in the field are painted in red in order to prevent them from being removed by mistake.**
- **Do not remove or loosen any of the red-painted screws in the field. It should also be noted that, when two or more screws are used for a single part, only one representative screw may be marked with the red paint.**

C. Variable resistors on board

NOTE

- **Do not turn the variable resistors on boards for which no adjusting instructions are given in Adjustment/Setting.**

D. Removal of PWBs

⚠ CAUTION

- **When removing a circuit board or other electrical component, refer to "Handling of PWBs" and follow the corresponding removal procedures.**
- **The removal procedures given in the following omit the removal of connectors and screws securing the circuit board support or circuit board.**
- **Where it is absolutely necessary to touch the ICs and other electrical components on the board, be sure to ground your body.**

4.2 Disassembly/Assembly/Cleaning list (other parts)

4.2.1 Disassembly/Assembly parts list

No.	Section	Part name	Ref. page
1	Exterior parts	Paper output tray	P.5
2		Front cover	P.5
3		Upper cover	P.6
4		Rear cover	P.6
5	Units	Saddle unit	P.7
6		Crease unit	P.9
7		Stapler unit	P.11
8	Others	In & out guide drive motor	P.15
9		Crease roller	P.17

4.2.2 Cleaning parts list

No.	Section	Part name	Ref. page
1	Exit section Transport section	Rollers and rolls	P.24

4.3 Disassembly/Assembly procedure

4.3.1 Paper output tray/front cover

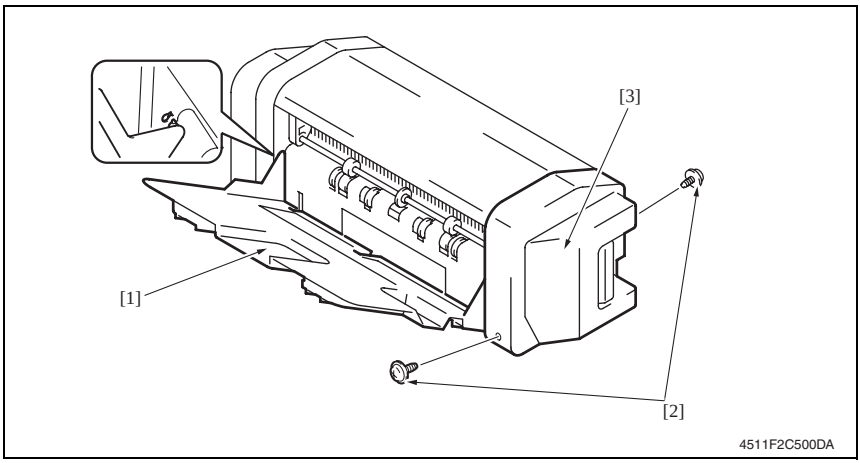

1. Align the cutout and remove the paper output tray [1].
2. Remove two screws [2], and remove the front cover [3].

4.3.2 Rear cover

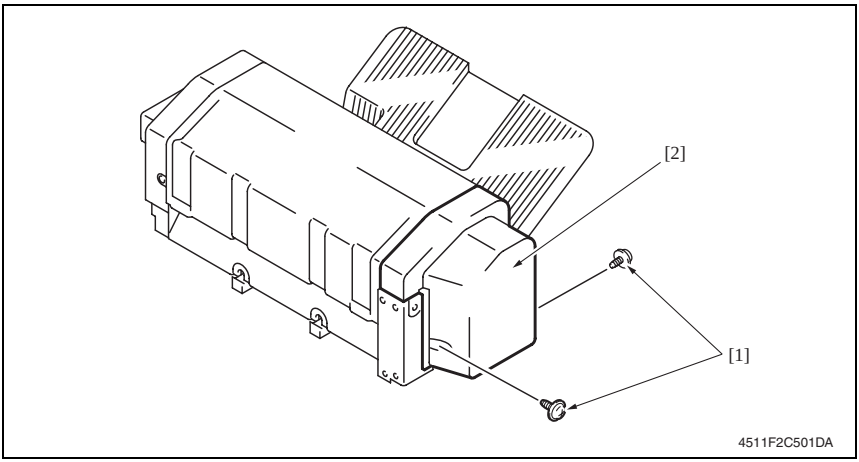

1. Remove two screws [1], and remove the rear cover [2].

4.3.3 Upper cover

1. Remove the front cover.
See P.5
2. Remove the rear cover.
See P.6

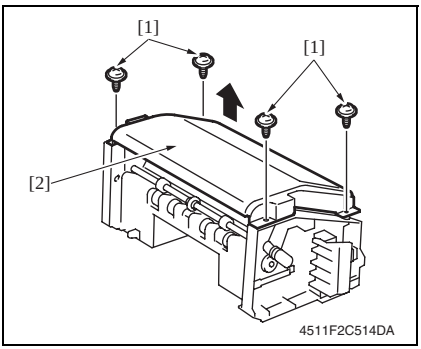

3. Remove four screws [1], and remove the upper cover [2].

4.3.4 Saddle unit

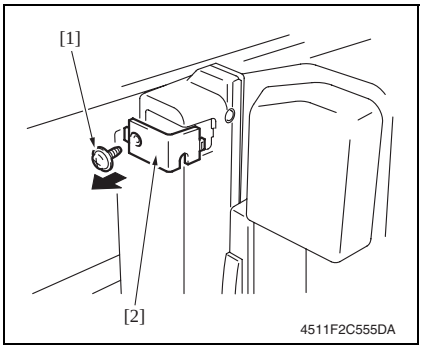

1. Remove the screw [1], and remove the connector cover [2].

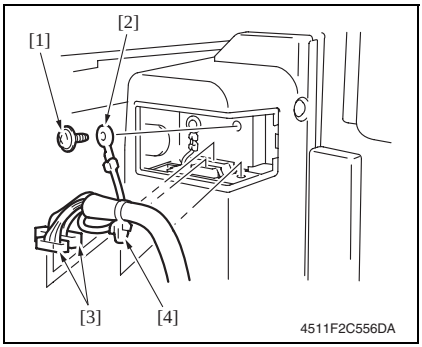

2. Remove the screw [1], and remove the ground wire [2].
3. Disconnect two connectors [3].
4. Remove the snap band [4].

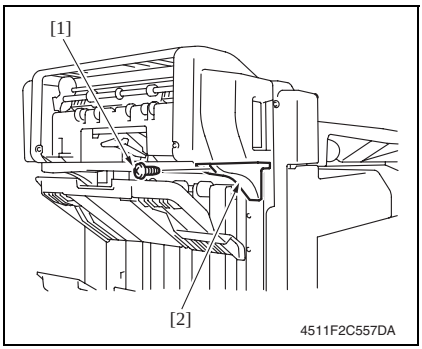

5. Remove the screw [1], and remove the mounting bracket [2].

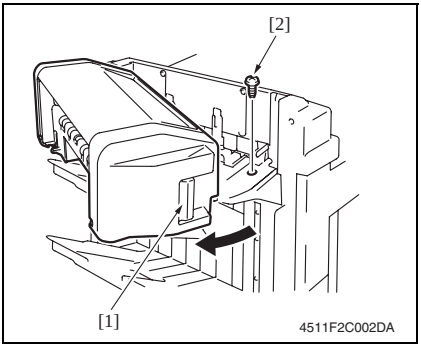

6. Pull the lock release lever [1], and open the saddle unit.
7. Remove the screw [2].

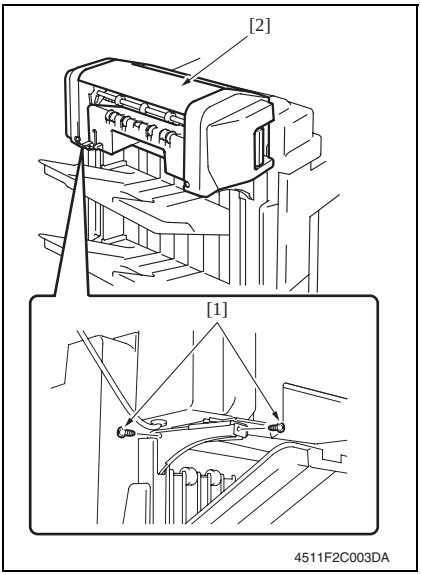

8. Remove two screws [1], and remove the saddle unit [2].

4.3.5 Crease unit

1. Remove the saddle unit.
See P.7
2. Remove the finisher unit.
See P.30 of the FS-519/PK-515/OT-602 service manual.

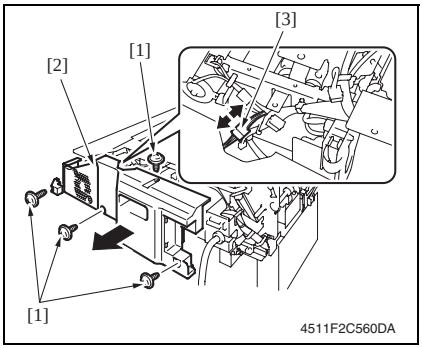

3. Remove four screws [1] and remove the finisher unit rear cover [2].
4. Disconnect the connector [3].

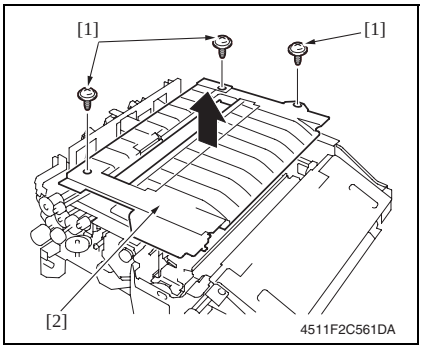

5. Remove three screws [1] and remove the finisher unit upper cover [2].

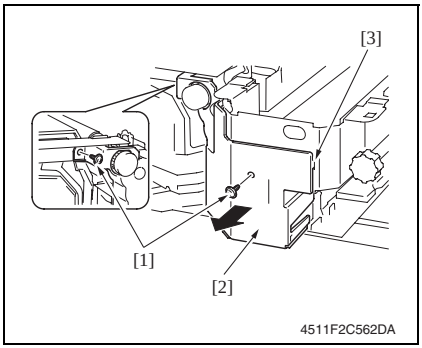

6. Remove two screws [1] and remove the finisher unit right front cover [2].

NOTE

- **At reinstallation, first fit the tab [3] into position.**

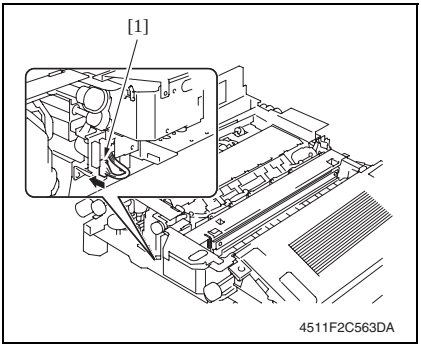

7. Disconnect the connector [1].

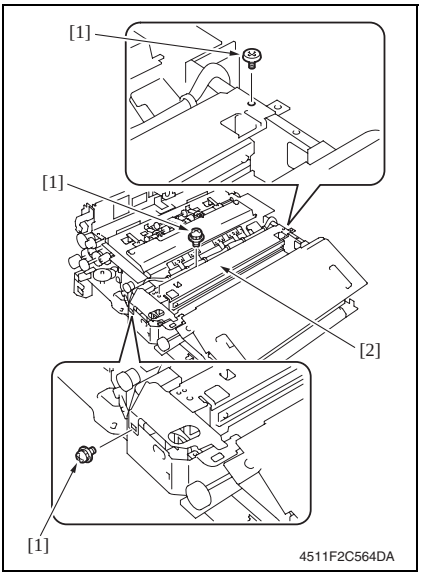

8. Remove three screws [1], and remove the crease unit [2].

NOTE

- **When the punch kit is mounted, remove the punch kit first.**

4.3.6 Stapler unit

1. Remove the saddle unit.
See P.7
2. Remove the paper output tray.
See P.5
3. Remove the front cover.
See P.5
4. Remove the rear cover.
See P.6
5. Remove the upper cover.
See P.6

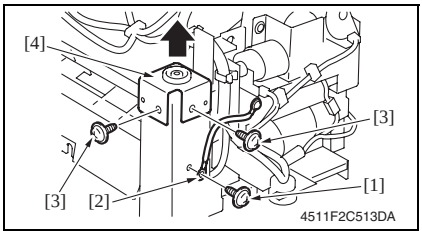

6. Remove the screw [1], and remove the ground wire [2].
7. Remove two screws [3], and remove the holder [4].

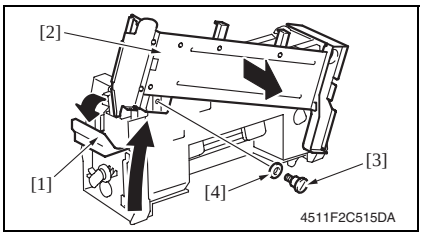

8. Release the lock release lever [1], and slide the saddle unit mounting plate [2].
9. Remove the shoulder screw [3] and the washer [4], and remove the saddle unit mounting plate [2].

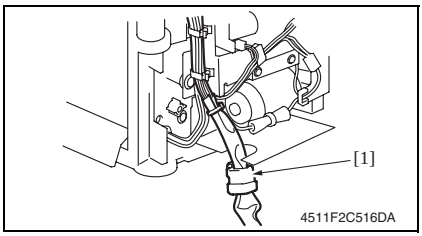

10. Remove the harness clamp [1] from the metal bracket.

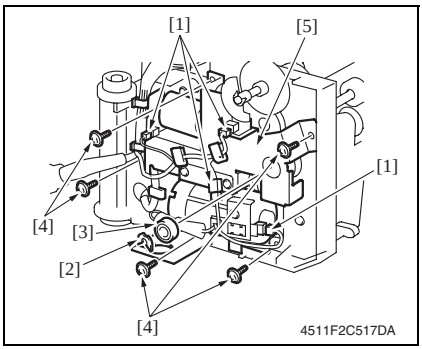

11. Remove the harness from the wire saddle.
12. Disconnect four connectors [1].
13. Remove the C-ring [2], and remove the bearing [3].
14. Remove five screws [4], and remove the drive unit [5].

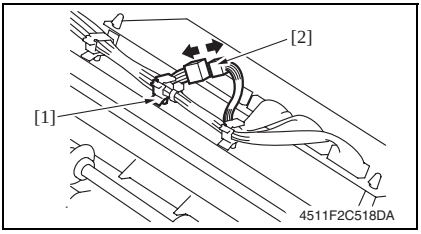

15. Remove the wire saddle [1], and disconnect the connector [2].

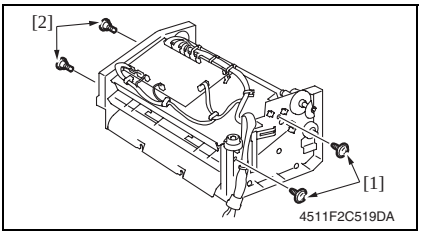

16. Remove two screws [1] and two shoulder screws [2].

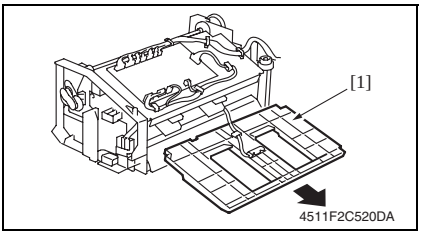

17. Remove the processing tray [1].

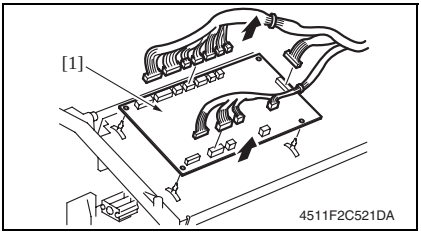

18. Disconnect all the connectors on the SD control board.
19. Remove the board support, and then remove the SD control board [1].

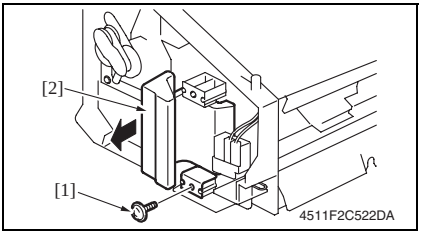

20. Remove the screw [1], and remove the lock release lever [2].

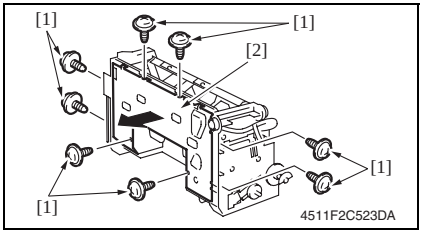

21. Remove eight screws [1], and remove the lower cover [2].

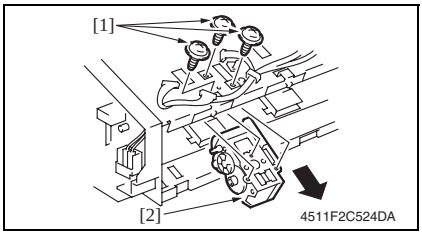

22. Remove the wire saddle and disconnect the connector.
23. Remove three screws [1], and remove the clincher 1 [2].

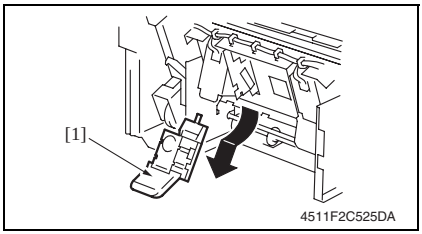

24. Remove the staple cartridge 1 [1].

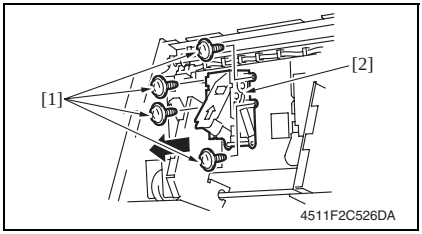

25. Remove four screws [1], and remove the stapler 1 [2].

NOTE

- **To replace clincher 2 and stapler 2, repeat steps 22 to 25.**

Precaution for clincher reinstallation

- **When the clincher is installed, the position of the stapler and the clincher will be misaligned. Be sure to perform the following adjustment.**

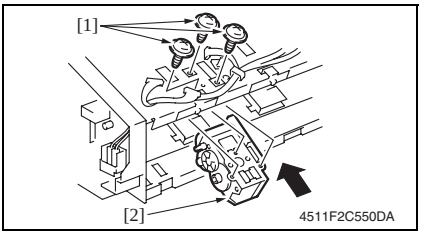

1. Use three screws [1] to temporary fix the clincher [2].

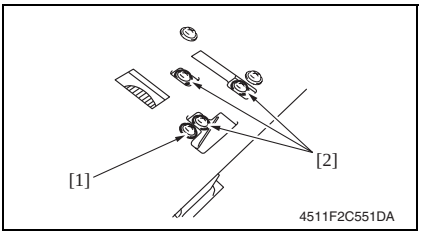

2. Loosen the screw [1] of the stopper.
3. Loosen three screws [2] of the clincher.

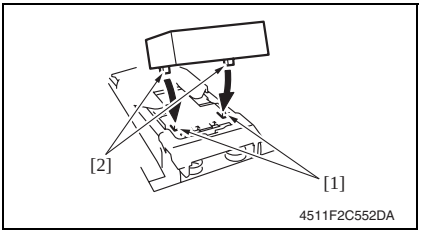

4. Aligning the protrusions of the jig [2] with the recesses in the stapler [1], fit the jig to the stapler.

NOTE

- **Make sure that the protrusions of the jig properly rest in the recesses.**

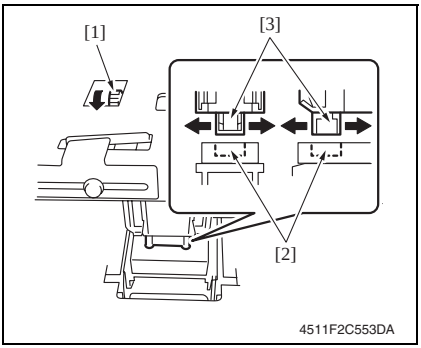

5. Turn the gear [1] of the clincher and then slide the clincher assy so that the protrusion of the clincher [3] fits into the recess in the jig [2].

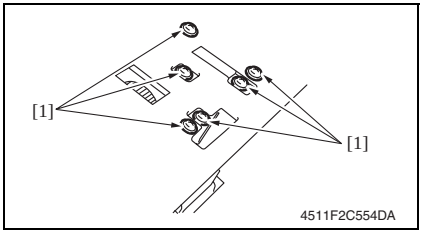

6. Tighten six screws [1].

NOTE

- **Turn the gear again and check to see that the protrusion of the clincher smoothly fits into the recess in the jig.**

7. Turn the gear and remove the jig.

4.3.7 In & out guide motor

1. Remove the saddle unit.
See P.7

2. Remove the paper output tray.
See P.5

3. Remove the front cover.
See P.5

4. Remove the rear cover.
See P.6

5. Remove the upper cover.
See P.6

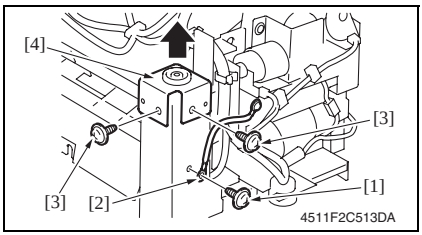

6. Remove the screw [1], and remove the ground wire [2].

7. Remove two screws [3], and remove the holder [4].

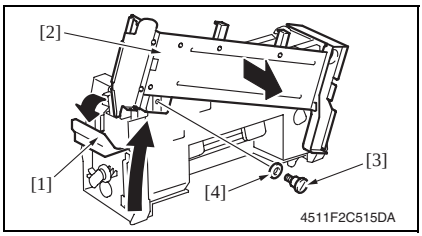

8. Release the lock release lever [1], and slide the saddle unit mounting plate [2].

9. Remove the shoulder screw [3] and the washer [4], and remove the saddle unit mounting plate [2].

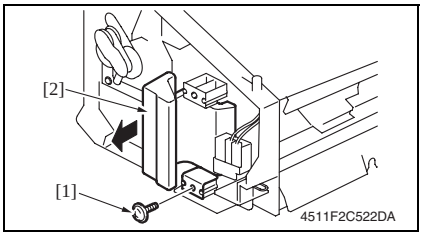

10. Remove the screw [1], and remove the lock release lever [2].

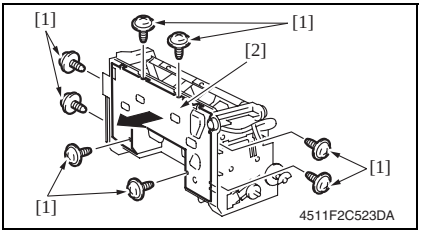

11. Remove eight screws [1], and remove the lower cover [2].

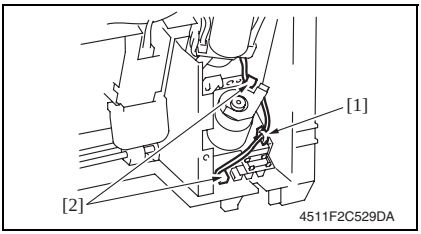

12. Remove the wire saddle [1], and disconnect two connectors [2].

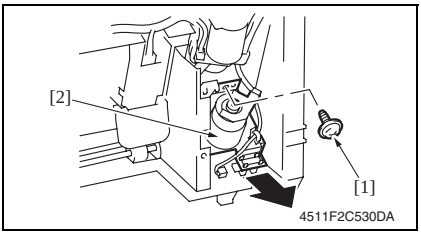

13. Remove the screw [1], and remove the in & out guide motor assy [2].

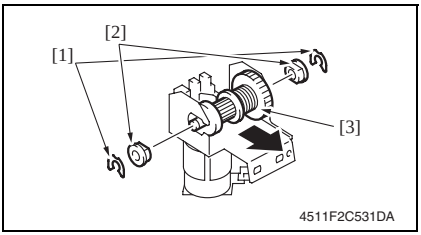

14. Remove two C-rings [1].
15. Remove two bushings [2], and remove the clutch gear assy [3].

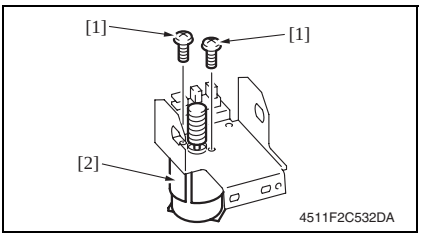

16. Remove two screws [1], and remove the in & out guide motor [2].

Precaution for in & out guide motor reinstallation

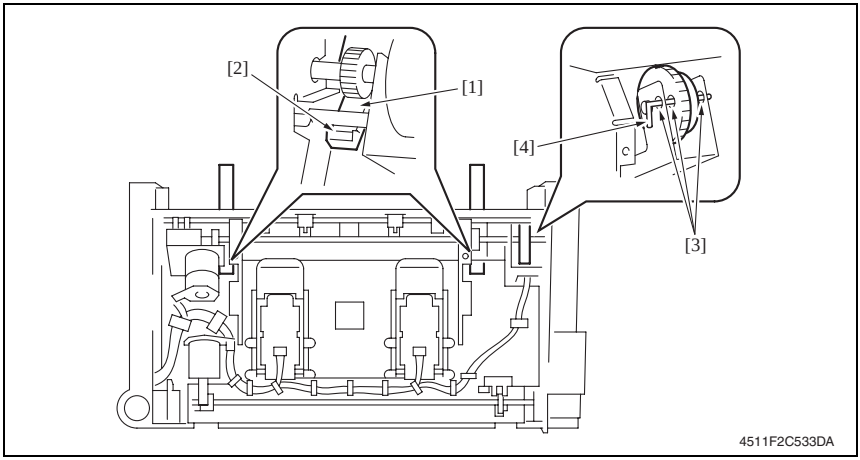

1. Press the two in & out guides [1] in and check that they touch the stopper [2] simultaneously.
2. Check that pins [4] can be inserted through the positioning holes [3] (3 holes) of the in & out guide sensor assy.
3. Use two screws to secure the in & out guide motor.

4.3.8 Crease roller

1. Remove the crease unit.
See P.9

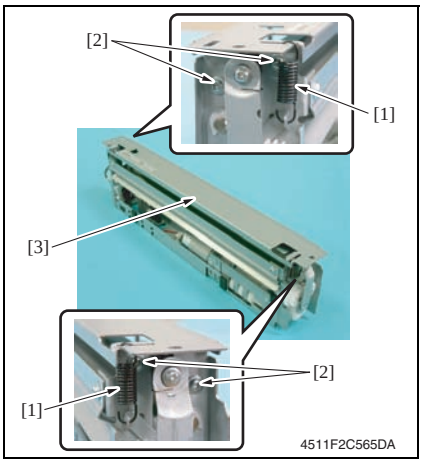

2. Remove two springs [1] and four screws [2], and remove the upper plate [3].

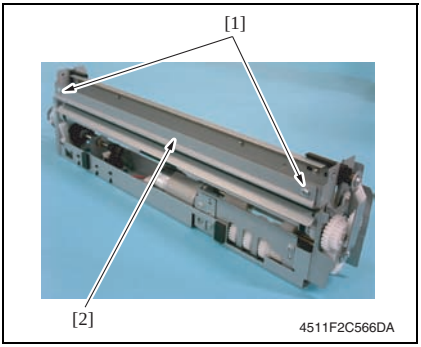

3. Remove two screws [1], and remove the guide plate [2].

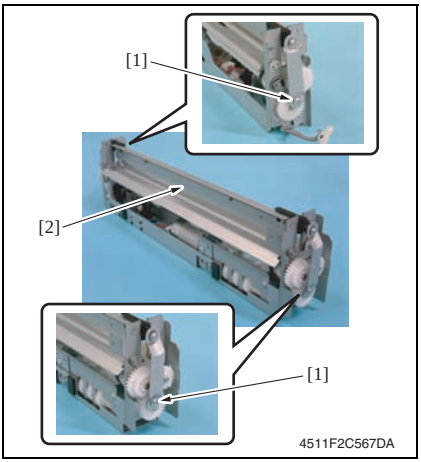

4. Remove two screws [1], and remove the chopper assy [2].

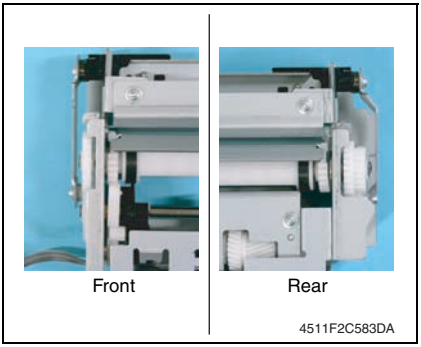

NOTE

- **Install the chopper assy in the direction shown in the left figure.**

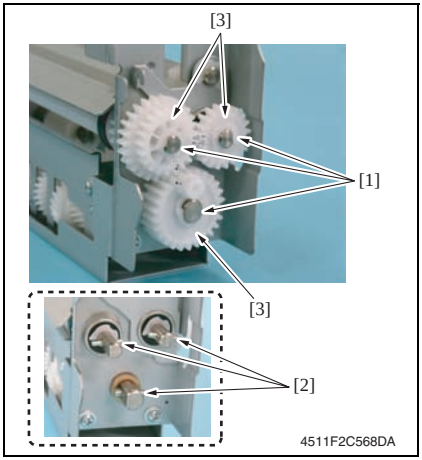

5. Remove three C-rings [1] and three pins [2], and remove three gears [3].

NOTE

- **Use care not to lose the pin.**

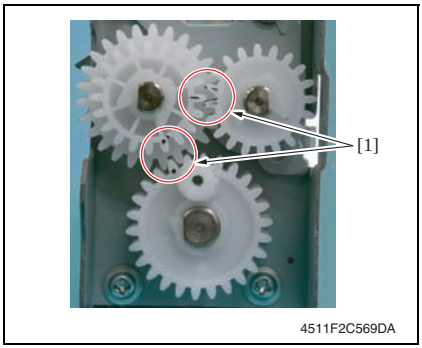

NOTE

- **Install the gear so that the mark [1] is aligned to the position shown in the left figure.**

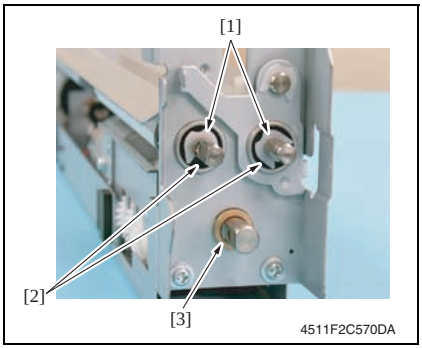

6. Remove two C-rings [1], and remove two bearings [2].

7. Remove the bushing [3].

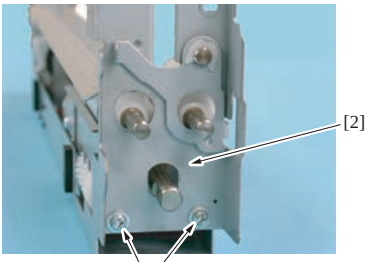

8. Remove two screws [1], and remove the rear holder [2].

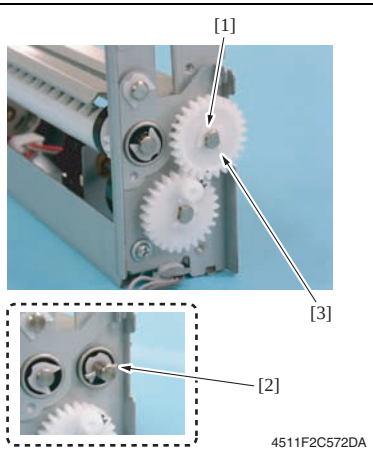

9. Remove the C-ring [1] and the pin [2], and remove the gear [3].

NOTE

- **Use care not to lose the pin.**

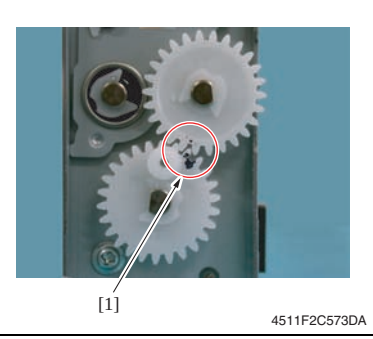

NOTE

- **Install the gear so that the mark [1] is aligned to the position shown in the left figure.**

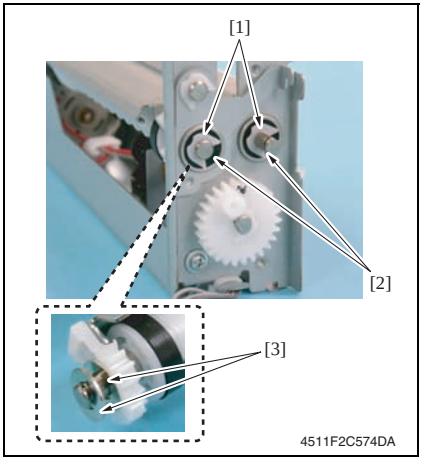

10. Remove two C-rings [1], two bearings [2] and two washers [3].

NOTE

- **Use care not to lose the washer.**

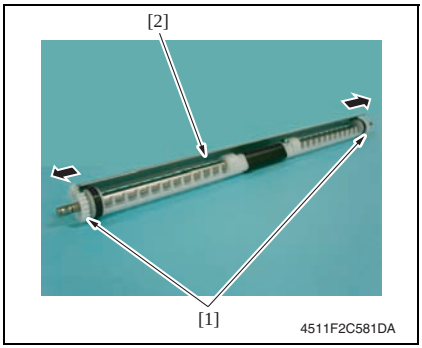

11. Remove two gears [1] of crease roller 1 assy, and remove the guide plate [2].

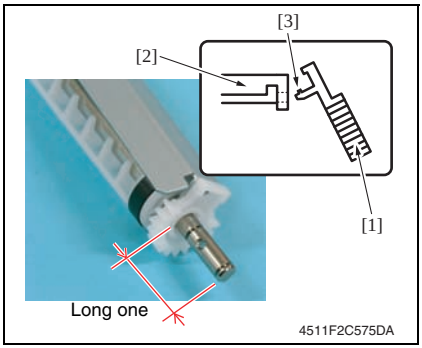

NOTE

- **When installing the gear [1] to the guide plate [2], insert the gear [1] at an angle and use care not to break the tabs [3].**
- **Install the guide plate as shown on the left.**

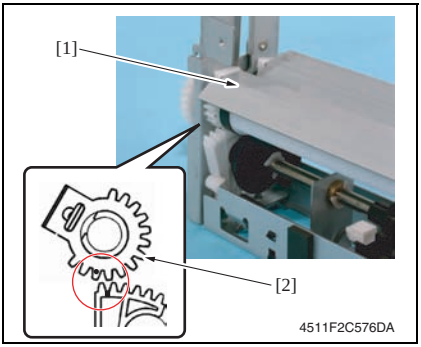

NOTE

- **When mounting the crease roller 1 assy [1], mount it so that the tally mark on the gear [2] for the crease roller 1 and the tally mark on the gear below will be next to each other with the one on the gear [2] being outer side.**

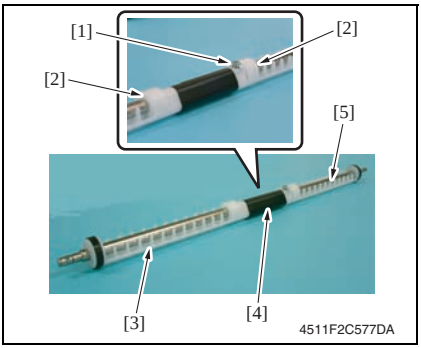

12. Remove the screw [1].
13. Remove two C-rings [2] and remove the crease roller A [3], B [4] and C [5].

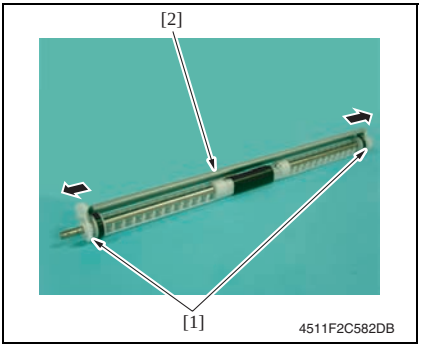

14. Remove two gears [1] of crease roller 2 assy, and remove the guide plate [2].

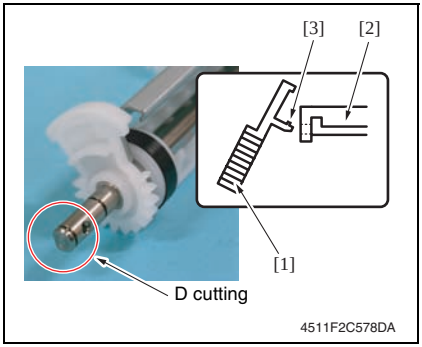

NOTE

- **When installing the gear [1] to the guide plate [2], insert the gear [1] at an angle and use care not to break the tabs [3].**
- **Install the gear and guide plate as shown on the left.**

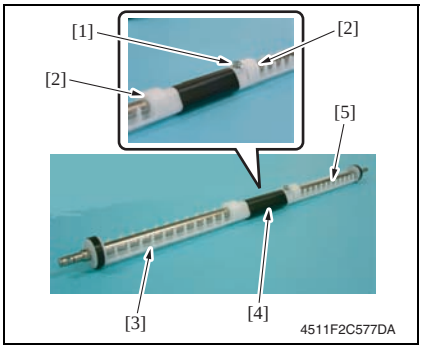

15. Remove the screw [1].
16. Remove two C-rings [2] and remove the crease roller A [3], B [4] and C [5].

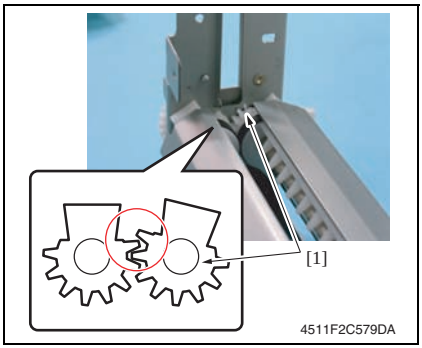

NOTE

- **When mounting the crease roller assy 2, mount it so that the gear [1] for the crease roller 2 assy will be over the gear for the cease roller 1 by one tooth.**

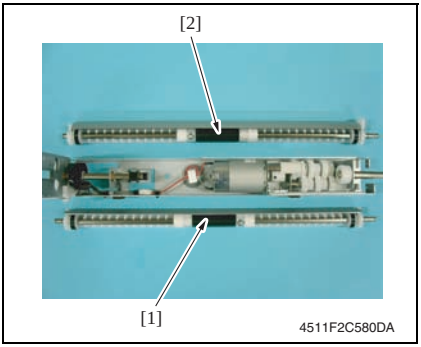

NOTE
- **Use care to mount the crease roller assy 1 [1] and 2 [2] in the proper directions.**

4.4 Cleaning procedure

NOTE
- **The alcohol described in the cleaning procedure of maintenance represents the isopropyl alcohol.**

4.4.1 Cleaning of the rollers and rolls

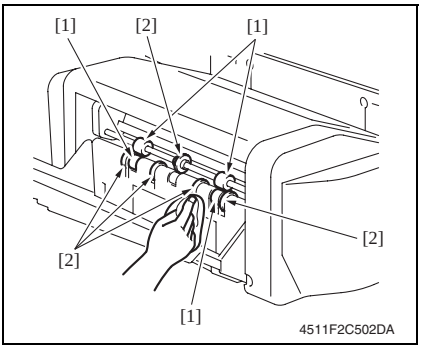

1. Using a cleaning pad dampened with alcohol, wipe the roller [1] and roll [2].

2. Remove the crease unit.
See P.9

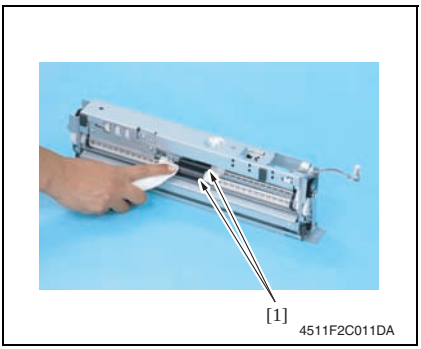

3. Using a cleaning pad dampened with alcohol, wipe the roller [1].

Adjustment/Setting

5. How to use the adjustment section

- "Adjustment/Setting" contains detailed information on the adjustment items and procedures for this machine.
- Throughout this "Adjustment/Setting," the default settings are indicated by " ".

Advance checks

Before attempting to solve the customer problem, the following advance checks must be made. Check to see if:

- The power supply voltage meets the specifications.
- The power supply is properly grounded.
- The machine shares the power supply with any other machine that draws large current intermittently (e.g., elevator and air conditioner that generate electric noise).
- The installation site is environmentally appropriate: high temperature, high humidity, direct sunlight, ventilation, etc.; levelness of the installation site.
- The defective image attributes to the data itself which is sent from the PC to the printer.
- The density is properly selected.
- Correct paper is being used for printing.
- The units, parts, and supplies used for printing (developer, PC drum, etc.) are properly replenished and replaced when they reach the end of their useful service life.
- Toner is not running out.

⚠ CAUTION

- **To unplug the power cord of the machine before starting the service job procedures.**
- **If it is unavoidably necessary to service the machine with its power turned ON, use utmost care not to be caught in the scanner cables or gears of the exposure unit.**
- **Special care should be used when handling the fusing unit which can be extremely hot.**
- **The developing unit has a strong magnetic field. Keep watches and measuring instruments away from it.**
- **Take care not to damage the PC drum with a tool or similar device.**
- **Do not touch IC pins with bare hands.**

6. Sensor check

6.1 Check procedure

A. Procedure

1. Display the Service Mode screen.
   See P.228 of the main body service manual.
2. Click [State Confirmation].
3. Click [Sensor Check].
4. Click three times [▼].

6.1.1 Sensor check screen

- This is only typical screen which may be different from what are shown on each individual main body.

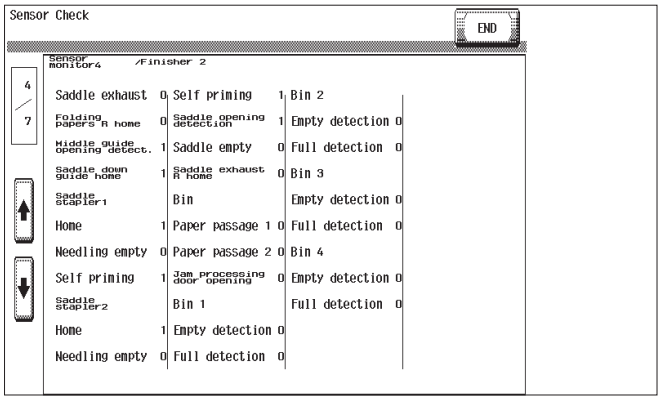

4510F3E002DA

6.1.2 Sensor check list

A. Sensors 4

Symbol	Panel display		Part/Signal name	Operation characteristics/Panel display	
				1	0
PS20	Sensors monitor4	Saddle exit	Saddle exit sensor	Paper present	Paper not present
PS22		Folding R home	Crease roller home position sensor	Paper present	Paper not present
SW5		Middle guide	Middle guide switch	Open	Closed
PS24		Saddle guide	Layable guide home sensor	Blocked	Unblocked
—		Saddle stapler 1			
—		Home	Staple Home Position Sensor 1	Blocked	Unblocked
—		Staple empty	Staple Empty Detection Sensor 1	Blocked	Unblocked
—		Self priming	Self-Priming Sensor 1	Blocked	Unblocked
—		Saddle stapler 2			
—		Home	Staple Home Position Sensor 2	Blocked	Unblocked
—		Staple empty	Staple Empty Detection Sensor 2	Blocked	Unblocked
—		Self priming	Self-Priming Sensor 2	Blocked	Unblocked
SW4		Saddle	Saddle opening switch	Open	Closed
PS21		Saddle empty	Saddle tray empty sensor	Paper present	Paper not present
PS18		Home (Saddle exit)	Saddle exit roller home position sensor	Paper present	Paper not present

7. Finisher operations

7.1 Entering Finisher Check

1. Display the Service Mode screen.
   See P.228 of the main body service manual.
2. Click [Finisher].
3. Click [CB-FN adjustment].
4. Click [Finisher Check].
5. Click the item one wants.

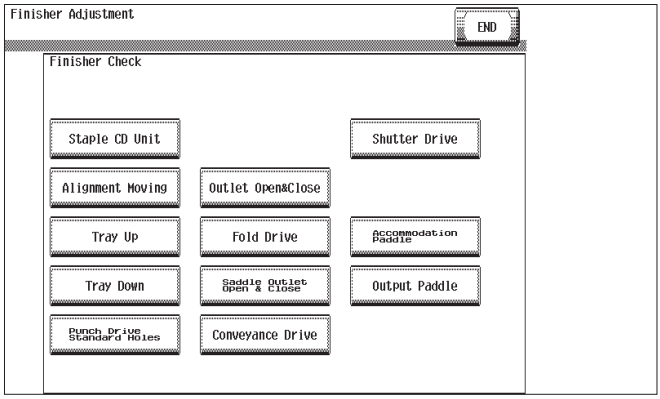

4511F3E533DA

7.2 Finisher Check modes

A. Creasing unit movement mode

- Performs the creasing drive once.
  → Raises the layable guide.
  → Stops after the predetermined time.
  → Lowers the layable guide.
  → The operation is finished.

B. Saddle Unit exit open/close mode

- Opens the saddle exit after the saddle exit is opened and closed.
  → Stops after the predetermined time.
  → The saddle exit closes.
  → The saddle in & out guide advances.
  → Stops after the predetermined time.
  → The saddle in & out guide retracts.
  → The operation is finished.

C. Transport drive mode

- Transport drive is performed for the predetermined time. (Performs the same transport drive as the pre-drive with the high speed of the connected printer.)
  → Drives the entrance motor (M1).
  → Drives the transport motor/1 (M2).
  → Drives the transport motor/2 (M3).
  → Drives the exit motor (M4).
  → The operation is finished.
- If the mail bin kit MT-502 is installed, the mail bins are also driven.
- If the saddle kit SD-505 is also installed, the saddle transport motor (M8) is also driven.

7.3 Fold & Staple Pos. Adjustment

NOTE

Make this adjustment after any of the following procedures has been performed.

- **When the crease unit has been replaced.**
- **When a deviation occurs in the crease.**
- **When fold angle adjustment has been made.**

7.3.1 Control panel

1. Make a print in the crease mode. (A3 size)

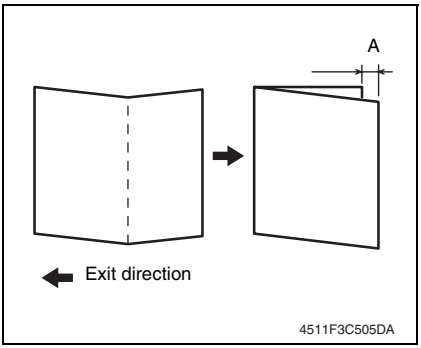

2. Fold the print fed out along the crease.
3. Check the crease for deviation (Measure width A).
   Specification: 0 ± 1.5 mm
4. When the width A does not fall within the specified value, conduct the following adjustment.
5. Display the Service Mode screen.
   See P.228 of the main body service manual.
6. Select [Finisher Adjust] → [CB-FN Adjust] → [Half-Fold Pos.].
7. Press the Menu/Select key.
8. Select [A3] and press the Menu/Select key.
9. Select [Plain paper] and press the Menu/Select key.

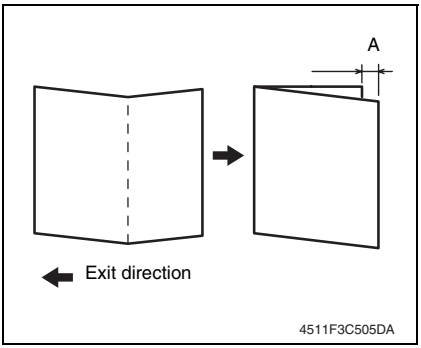

- If the fold is offset as shown on the left.

10. Press ▼ key and set the appropriate numeric value.
    Adjustment range: 0 to -10
    (1 increment 0.5 mm)

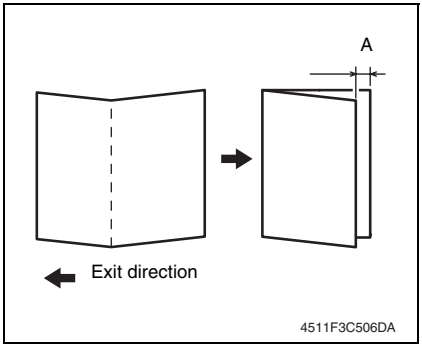

- If the fold is offset as shown on the left.

11. Press ▲ key and set the appropriate numeric value.
Adjustment range: 0 to +10
(1 increment 0.5 mm)

12. Press the Menu/Select key.
13. Make another print, and check the deviation.
14. Turn OFF the power switch, wait for 10 sec., then turn the switch ON.

7.3.2 Jig Software

1. Make a print in the crease mode. (A3 size)

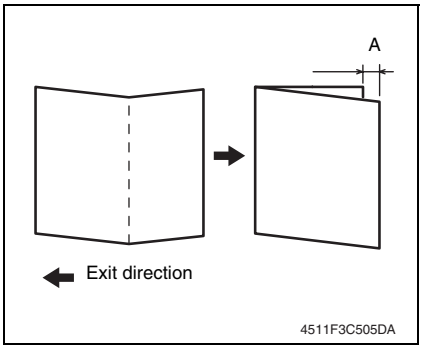

2. Fold the print fed out along the crease.
3. Check the crease for deviation (Measure width A).
Specification: 0 ± 1.5 mm
4. When the width A does not fall within the specified value, conduct the following adjustment.

5. Display the Service Mode screen.
See P.228 of the main body service manual.
6. Click [Finisher].
7. Click [CB-FN adjustment].
8. Click [Fold & Staple Pos.Adjustment].
9. Click [Fold Position Adjustment].

10. Click [A3] and then click [Normal Paper].

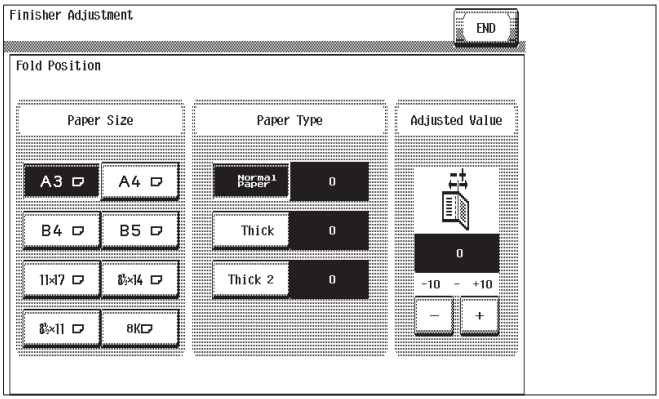

4511F3E539DA

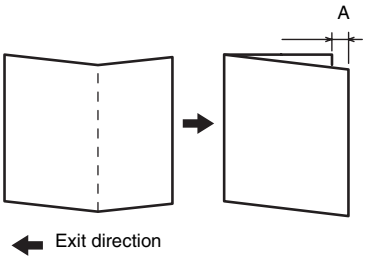

4511F3C505DA

- If the fold is offset as shown on the left.

11. Click [-] and set the appropriate numeric value.
Adjustment range: 0 to -10
(1 increment 0.5 mm)

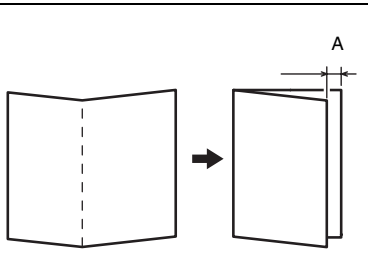

4511F3C506DA

- If the fold is offset as shown on the left.

12. Click [+] and set the appropriate numeric value.
Adjustment range: 0 to +10
(1 increment 0.5 mm)

13. Click [END].
14. Make another print, and check the deviation.
15. Click [Exit] on the Service Mode screen.
16. Turn OFF the power switch, wait for 10 sec., then turn the switch ON.

7.4 Center Staple Position Adjustment

NOTE
Make this adjustment after any of the following procedures has been performed.
- **When staple unit has been replaced.**
- **When center staple position is misaligned.**
- **When center staple angle adjustment has been made.**

7.4.1 Control panel

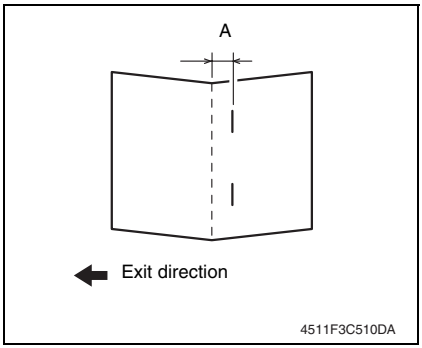

1. Select the center staple mode and make a print. (A3 Size)
2. Check the staple position for deviation from the crease (Measure width A).
   Specification: 0 ± 1.5 mm
3. When the width A does not fall within the specified value, conduct the following adjustment.
4. Display the Service Mode screen.
   See P.228 of the main body service manual.
5. Select [Finisher Adjust] → [CB-FN Adjust] → [Center Staple Pos].
6. Press the Menu/Select key.
7. Select [A3] and press the Menu/Select key.
8. Select [Plain Paper] and press the Menu/Select key.

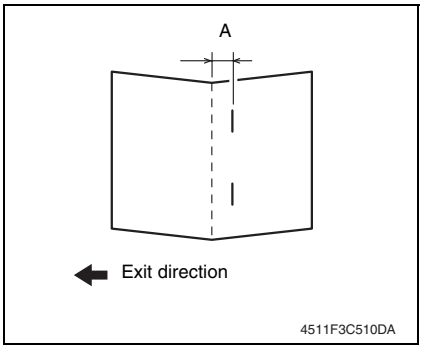

- If the fold is offset as shown on the left.

9. Press ▼ key and set the appropriate numeric value.
   Adjustment range: 0 to -10
   (1 increment 0.5 mm)

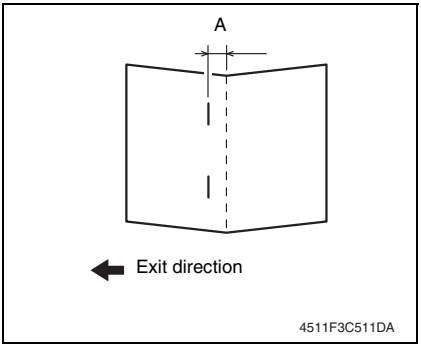

- If the fold is offset as shown on the left.

10. Press ▲ key and set the appropriate numeric value.
Adjustment range: 0 to +10
(1 increment 0.5 mm)

11. Press the Menu/Select key.
12. Make another print, and check the deviation.
13. Turn OFF the power switch, wait for 10 sec., then turn the switch ON.

7.4.2 Jig software

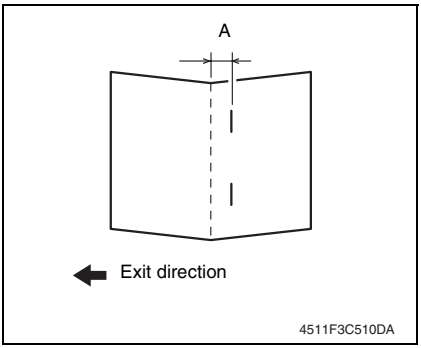

1. Select the center staple mode and make a print. (A3 Size)
2. Check the staple position for deviation from the crease (Measure width A).
Specification: 0 ± 1.5 mm
3. When the width A does not fall within the specified value, conduct the following adjustment.

4. Display the Service Mode screen.
See P.228 of the main body service manual.
5. Click [Finisher].
6. Click [CB-FN adjustment].
7. Click [Fold & Staple Pos.Adjustment].
8. Click [Center Staple Position].

9. Click [A3] and then click [Normal Paper].

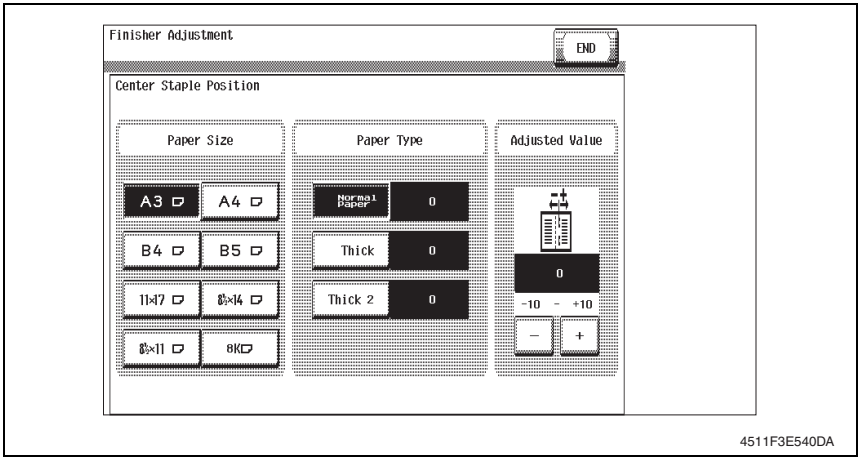

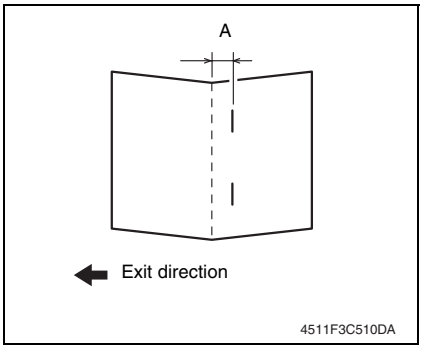

- If the fold is offset as shown on the left.

10. Click [-] and set the appropriate numeric value.
Adjustment range: 0 to -10
(1 increment 0.5 mm)

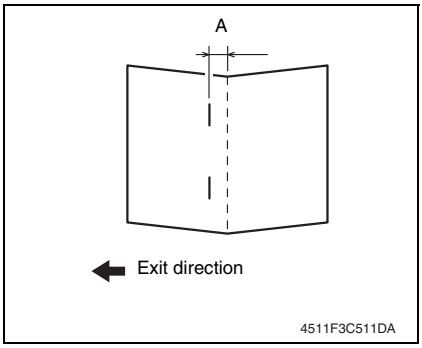

- If the fold is offset as shown on the left.

11. Click [+] and set the appropriate numeric value.
Adjustment range: 0 to +10
(1 increment 0.5 mm)

12. Click [END].
13. Make another print, and check the deviation.
14. Click [Exit] on the Service Mode screen.
15. Turn OFF the power switch, wait for 10 sec., then turn the switch ON.

8. Mechanical adjustment

8.1 Fold Angle Adjustment

NOTE

Make this adjustment after any of the following procedures has been performed.

- **When the crease unit has been replaced.**
- **When a slant occurs in the crease.**

1. Make a print in the crease mode. (A3 size)

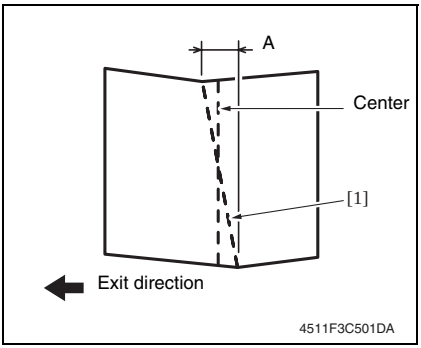

2. Fold the output paper along the crease [1].

3. Fold the output paper and half and measure the width A of the paper.
Specification: 0 ± 1.5 mm

4. If the fold position is slanted as shown on the left, make the following adjustment.

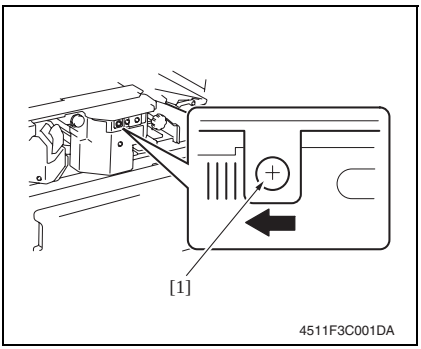

5. Open the front door, loosen the adjustment screw [1], and move the crease unit to the left to make the adjustment.
Graduated in 1-mm divisions

- If the fold position is slanted opposite to the figure of step 4, move the crease unit to the right to make the adjustment.

6. Make another print and check the fold position.

8.2 Center Staple Angle Adjustment

NOTE

Make this adjustment after any of the following procedures has been performed.

- **When staple unit has been replaced.**
- **When a slant occurs in the position of the center staple.**

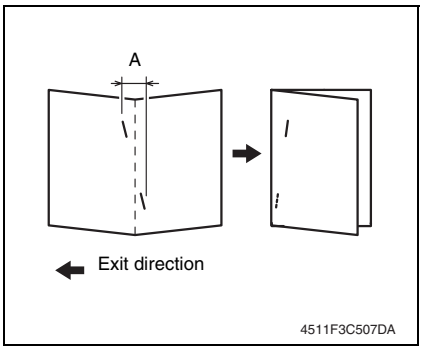

1. Select the center staple mode and make a print. (A3 Size)
2. Check the staple position for deviation from the crease (Measure width A).
   Specification: 0 ± 1.5 mm
3. If the staple position is slanted as shown on the left, make the following adjustment.

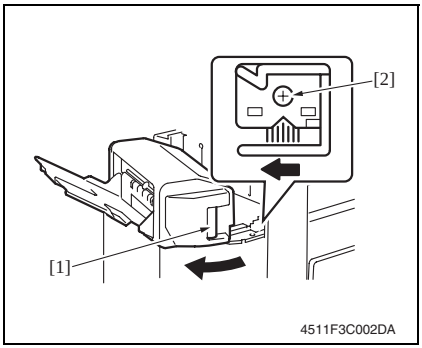

4. Release the lock release lever [1] of the saddle unit.
5. Loosen the adjustment screw [2] and move the lock lever to the left to make the adjustment.

- If the staple position is slanted opposite to the figure of step 2, move the lock lever to the right to make the adjustment.

6. Make another print and check the staple position.

Blank Page

Troubleshooting

9. Jam display

9.1 Misfeed display

- When a paper misfeed occurs, the LED line lights up red steadily and the misfeed message is displayed on the control panel of the machine.

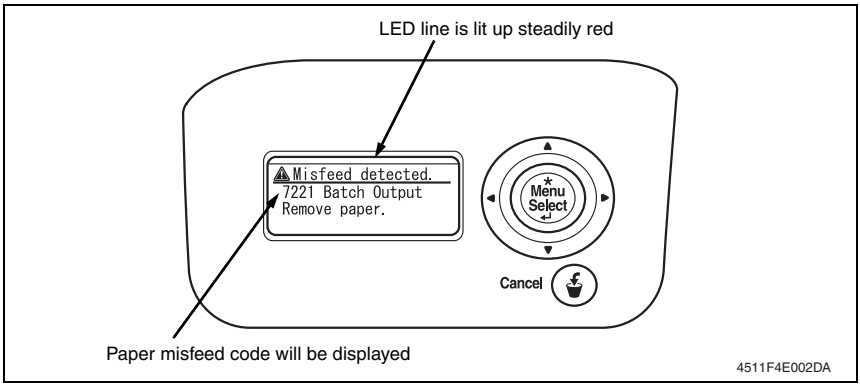

Code	Misfeed location	Misfeed processing location	Action
7221	Paper bundle exit misfeed	Front door	P.41
7285	Staple unit 1 misfeed	Saddle cover	P.42
7284	Staple unit 2 misfeed	Saddle cover	
7225	Creasing section misfeed	Front door	P.43

9.2 Sensor layout

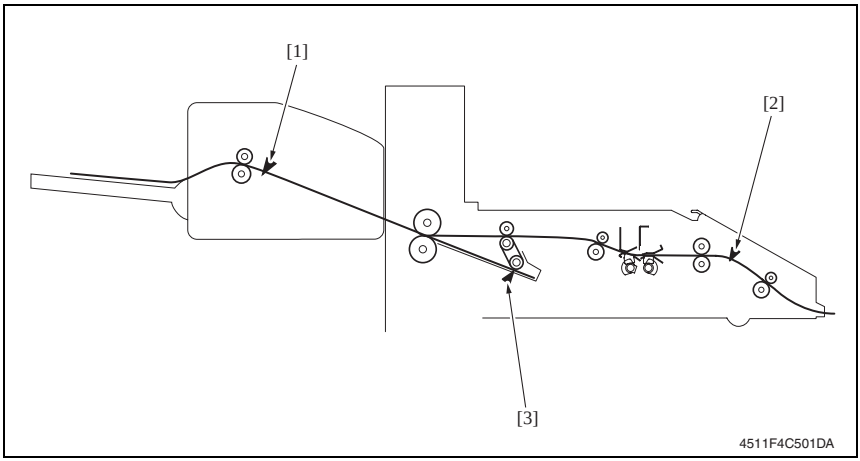

[1]	Saddle exit sensor	PS20
[2]	Entrance sensor	PS1
[3]	Storage tray detect sensor	PS3

9.3 Solution

9.3.1 Initial check items

- When a paper misfeed occurs, first perform the following initial check items.

Check Item	Action
Does the paper meet product specifications?	Change the paper.
Is paper curled, wavy, or damp?	See “Solution when paper curl occurs” on P.40.
Is a foreign object present along the paper path, or is the paper path deformed or worn?	Clean or change the paper path.
Are the rolls/rollers dirty, deformed, or worn?	Clean or change the defective roll/roller.
Are the edge guide and trailing edge stop at the correct position to accommodate the paper?	Set as necessary.
Are the actuators found operational when checked for correct operation?	Correct or change the defective actuator.

9.3.2 Solution when paper curl occurs

Step	Check items/actions		
1	Turn over the stacked paper in the paper tray.	OK	—
		NG	Go to step 2.
2	Does paper curl occur just after a warm-up has been completed or the sleep mode has been turned OFF?	YES	Go to step 3.
	Does paper curl occur under normal conditions (under conditions other than those mentioned above)?	YES	Go to step 5.
3	*1.* Call the Service Mode to the screen. *2.* Select [System 1] → [Change Warm Up Time]. *3.* Change the setting to [Mode3]. See P.344 of the main body service manual.	OK	—
		NG	Go to step 4.
4	*1.* Call the Service Mode to the screen. *2.* Select [System 1] → [Change Warm Up Time]. *3.* Change the setting to [Mode4]. See P.344 of the main body service manual.	—	—
5	*1.* Call the Service Mode to the screen. *2.* Select [Machine] → [Fusing Temperature]. *3.* Select a paper type. *4.* Change the temperature of Heater Roller to [-10 °C]. See P.305 of the main body service manual.	OK	—
		NG	Go to step 6
6	*1.* Call the Service Mode to the screen. *2.* Select [Machine] → [Fusing Temperature]. *3.* Select a paper type. *4.* Change the temperature of Heater Roller to [-20 °C]. See P.305 of the main body service manual.	—	—

9.3.3 Paper bundle exit misfeed

A. Detection timing

Type	Description
Paper bundle misfeed detection	The storage tray detecting sensor (PS3) is not turned OFF even after the set period of time has elapsed after the exit motor (M4) is energized.
	The saddle exit sensor (PS20) is not turned ON even after the set period of time has elapsed after the exit motor (M4) is energized.
	The saddle exit sensor (PS20) is not turned OFF even after the set period of time has elapsed after the saddle exit sensor (PS20) is turned ON.

B. Action

Relevant electrical parts	
Storage tray detect sensor (PS3) Saddle exit sensor (PS20) Exit motor (M4) Saddle exit motor (M8)	SD control board (SDCB)

Step	Action	WIRING DIAGRAM	
		Control signal	Location (Electrical component)
1	Initial check items	—	—
2	PS3 I/O check, sensor check	FSCB PJ14FSCB-8 (ON)	FS-519 C-12
3	PS20 I/O check, sensor check	SDCB PJ9SDCB-8 (ON)	SD-505 B-2
4	M4 operation check	FSCB PJ10FSCB-5 to 8	FS-519 C-3
5	M8 operation check	SDCB PJ4SDCB-1 to 2	SD-505 G-6
6	Change SDCB	—	—

9.3.4 Staple unit 1 misfeed/Staple unit 2 misfeed

A. Detection timing

Type	Description
Staple unit misfeed detection	The staple home position sensor in the staple unit is not turned ON even after the set period of time has elapsed after the staple motor rotates forward, and then the staple motor rotates backward, and the staple home position sensor in the staple unit is turned ON within the set period of time.

B. Action

Relevant electrical parts	
Staple unit 1 Staple unit 2	SD control board (SDCB)

Step	Action	WIRING DIAGRAM	
		Control signal	Location (Electrical component)
1	Initial check items	—	—
2	Drive coupling section check	—	—
3	I/O check, sensor check	—	—
4	Change staple unit 1	—	—
5	Change staple unit 2	—	—
6	Change SDCB	—	—

9.3.5 Creasing section misfeed

A. Detection timing

Type	Description
Creasing section misfeed detection	The entrance sensor (PS1) is not turned ON even after the set period of time has elapsed after the entrance motor (M1) is energized (beginning of backward rotation operation).
	The entrance sensor (PS1) is not turned OFF even after the set period of time has elapsed after the entrance motor (M1) is energized (beginning of forward rotation operation).

B. Action

Relevant electrical parts	
Entrance sensor (PS1) Entrance motor (M1)	SD control board (SDCB)

Step	Action	WIRING DIAGRAM	
		Control signal	Location (Electrical component)
1	Initial check items	—	—
2	PS1 I/O check, sensor check	FSCB PJ19FSCB-11 (ON)	FS-519 C-7
3	M1 operation check	FSCB PJ9FSCB-1 to 4	FS-519 C-6 to 7
4	Change SDCB	—	—

10. Malfunction code

10.1 Trouble code

- The machine's CPU performs a self-diagnostics function that, on detecting a malfunction, gives the corresponding malfunction code and maintenance call mark on the control panel.

Code	Item	Description
C11A2	Saddle exit roller pressure/retraction failure	• The saddle exit roller home position sensor (PS18) is not turned ON even after the set period of time has elapsed after the saddle exit open/close motor (M9) is energized (beginning of pressure operation). • The saddle exit roller home position sensor (PS18) is not turned OFF even after the set period of time has elapsed after the saddle exit open/close motor (M9) is energized (beginning of retraction operation).
C11A4	Saddle exit motor failure	The lock signal is detected after the set period of time has elapsed after the saddle exit motor (M8) is energized.
C11A5	Saddle in & out guide motor failure	• The in & out guide home sensor (PS23) is not turned OFF even after the set period of time has elapsed after the in & out guide motor (M13) is energized (beginning of advancing operation). • The in & out guide home sensor (PS23) is not turned ON even after the set period of time has elapsed after the in & out guide motor (M13) is energized (beginning of retracting operation).
C11A6	Saddle layable guide drive failure	• The layable guide home sensor (PS24) is not turned ON even after the set period of time has elapsed after the layable guide motor (M14) is energized (beginning of return operation to predetermined position). • The layable guide home sensor (PS24) is not turned OFF even after the set period of time has elapsed after the layable guide motor (M14) is energized (beginning of return operation to predetermined position).
C11B5	Side staple 1 drive failure	Home position sensor 1 is not turned OFF even after the set period of time has elapsed after saddle staple motor 1 is energized (beginning of staple operation).
C11B6	Side staple 2 drive failure	Home position sensor 2 is not turned OFF even after the set period of time has elapsed after saddle staple motor 2 is energized (beginning of staple operation).
C11D0	Crease motor drive failure	• The crease roller home position sensor (PS22) is not turned OFF even after the set period of time has elapsed after the crease motor (M10) is energized (beginning of backward rotation operation). • The crease roller home position sensor (PS22) is not turned ON even after the set period of time has elapsed after the crease motor (M10) is energized (beginning of forward rotation operation).

10.2 Solution

10.2.1 C11A2: Saddle exit roller pressure/retraction failure

Relevant electrical parts	
Saddle exit open/close motor (M9) Saddle exit roller home position sensor (PS18)	SD control board (SDCB)

Step	Action	WIRING DIAGRAM	
		Control signal	Location (Electrical component)
1	Check the M9 connector for proper connection and correct as necessary.	—	—
2	Check M9 for proper drive coupling and correct as necessary.	—	—
3	M9 operation check	SDCB PJ4SDCB-6 to 7	SD-505 G-5 to 6
4	PS18 I/O check, sensor check	SDCB PJ9SDCB-6 (ON)	SD-505 B-2
5	Change SDCB	—	—

10.2.2 C11A4: Saddle exit motor failure

Relevant electrical parts	
Saddle exit motor (M8)	SD control board (SDCB)

Step	Action	WIRING DIAGRAM	
		Control signal	Location (Electrical component)
1	Check the M8 connector for proper connection and correct as necessary.	—	—
2	Check M8 for proper drive coupling and correct as necessary.	—	—
3	M8 operation check	SDCB PJ4SDCB-1 to 2	SD-505 G-6
4	Change SDCB	—	—

10.2.3 C11A5: Saddle in & out guide motor failure

Relevant electrical parts	
In & out guide motor (M13) In & out guide home sensor (PS23)	SD control board (SDCB)

Step	Action	WIRING DIAGRAM	
		Control signal	Location (Electrical component)
1	Check the M13 connector for proper connection and correct as necessary.	—	—
2	Check M13 for proper drive coupling and correct as necessary.	—	—
3	M13 operation check	SDCB PJ4SDCB-4 to 5	SD-505 G-6
4	PS23 I/O check, sensor check	SDCB PJ10SDCB-3 (ON)	SD-505 B-2 to 3
5	Change SDCB	—	—

10.2.4 C11A6: Saddle layable guide drive failure

Relevant electrical parts	
Layable guide motor (M14) Layable guide home sensor (PS24)	SD control board (SDCB)

Step	Action	WIRING DIAGRAM	
		Control signal	Location (Electrical component)
1	Check the M14 connector for proper connection and correct as necessary.	—	—
2	Check M14 for proper drive coupling and correct as necessary.	—	—
3	M14 operation check	SDCB PJ4SDCB-8 to 9	SD-505 G-5
4	PS24 I/O check, sensor check	SDCB PJ10SDCB-6 (ON)	SD-505 B-3
5	Change SDCB	—	—

10.2.5 C11B5: Side staple 1 drive failure

10.2.6 C11B6: Side staple 2 drive failure

Relevant electrical parts	
Staple unit 1 Staple unit 2	SD control board (SDCB)

Step	Action	WIRING DIAGRAM	
		Control signal	Location (Electrical component)
1	Check the staple units 1 and 2 connectors for proper connection and correct as necessary.	—	—
2	Check staple units 1 and 2 for proper drive coupling, and correct as necessary.	—	—
3	Staple units 1 and 2 operation check	—	—
4	Change staple units 1 and 2	—	—
5	Change SDCB	—	—

10.2.7 C11D0: Crease motor drive failure

Relevant electrical parts	
Crease motor (M10) Crease roller home position sensor (PS22)	SD control board (SDCB)

Step	Action	WIRING DIAGRAM	
		Control signal	Location (Electrical component)
1	Check the M10 connector for proper connection and correct as necessary.	—	—
2	Check M10 for proper drive coupling and correct as necessary.	—	—
3	M10 operation check	SDCB PJ3SDCB-1 to 2	SD-505 C-7
4	PS22 I/O check, sensor check	SDCB PJ2SDCB-3 (ON)	SD-505 C-7
5	Change SDCB	—	—

Blank Page

KONICA MINOLTA

SERVICE MANUAL

FIELD SERVICE

FS-609/PK-501

Revision history

After publication of this service manual, the parts and mechanism may be subject to change for improvement of their performance.
Therefore, the descriptions given in this service manual may not coincide with the actual machine.

When any change has been made to the descriptions in the service manual, a revised version will be issued with a revision mark added as required.

Revision mark:

- To indicate clearly a section revised, show to the left of the revised section.
  A number within represents the number of times the revision has been made.

- To indicate clearly a section revised, show in the lower outside section of the corresponding page.
  A number within represents the number of times the revision has been made.

NOTE

Revision marks shown in a page are restricted only to the latest ones with the old ones deleted.

- When a page revised in Ver. 2.0 has been changed in Ver. 3.0:
  The revision marks for Ver. 3.0 only are shown with those for Ver. 2.0 deleted.
- When a page revised in Ver. 2.0 has not been changed in Ver. 3.0:
  The revision marks for Ver. 2.0 are left as they are.

Date	Service manual Ver.	Revision mark	Descriptions of revision
2007/11	1.0	—	Issue of the first edition

CONTENTS

FS-609/PK-501

General

1. Product specification 1
1.1 FS-609 1
1.2 PK-501 4

Maintenance

2. Other 5
2.1 Disassembly/adjustment prohibited items 5
2.2 Disassembly/Assembly list (Other parts) 6
2.3 Disassembly/Assembly procedure 7
2.3.1 Exit tray 7
2.3.2 Front cover 7
2.3.3 Rear cover 8
2.3.4 Upper door 8
2.3.5 Finisher tray upper cover 9
2.3.6 Upper cover 10
2.3.7 Horizontal transport unit 10
2.3.8 Side guide 11
2.3.9 Middle transport unit 12
2.3.10 Stapler 14
2.3.11 Saddle section 14
2.3.12 Finisher tray 16
2.3.13 Paddle section 17
2.3.14 Exit roller (upper) 18
2.3.15 Paddle 20
2.3.16 Exit roller (lower) and paper exit belt 21
2.3.17 Stapler/folding drive unit 24
2.3.18 Transport roller 26
2.3.19 Middle transport roller 28
2.3.20 Punch unit 29
2.3.21 Finisher control board (FSCB) 31
2.3.22 Punch control board (PKCB) 31
2.3.23 Transport motor unit 31
2.3.24 Entrance motor 32

2.3.25 Punch motor 32
2.3.26 Side registration motor 32

Adjustment/Setting

3. How to use the adjustment section 33
4. Sensor check 34
4.1 Check procedure 34
4.1.1 Sensor check screen 34
4.1.2 Sensor check list 35
5. Finisher Adjust 37
5.1 FN-X3 Adjust 37
5.1.1 Center Staple Pos (Jig software: Center-Staple Position Adj.) 37
5.1.2 Half-Fold Pos. (Jig software: Half-Fold Position Adj.) 39
5.2 Punch Option (Jig software: Punch option setting) 41
5.2.1 Punch Kit type 41
5.2.2 # of Punch-Holes 41
6. Mechanical adjustment 42
6.1 Adjustment of height and inclination 42
6.2 Adjustment of the folding position 44
6.2.1 Adjustment procedure 44
6.3 Stapler phase adjustment 48
6.3.1 Adjustment procedure 48
6.4 Saddle gear phase adjustment 52
6.4.1 Adjustment procedure 52
7. Board switch 53
7.1 FSCB (Finisher control board) 53
7.1.1 Adjustment of the folding positions 54
7.1.2 Adjustment of the center stapling position 55
7.1.3 Adjustment of the alignment plate position 56
7.2 PKCB (Punch control board) 58
7.2.1 Adjustment of the sensor output 58
7.2.2 Registration of the number of punch holes 59
7.2.3 Procedure after replacing the EEP-ROM (IC1002) 60
7.2.4 Punch center position adjustment 60

Troubleshooting

8. Jam display 63
8.1 Misfeed display 63
8.1.1 Misfeed display resetting procedure 63

8.2 Sensor layout 64
8.3 Solution 65
8.3.1 Initial check items 65
8.3.2 Solution when paper curl occurs 65
8.3.3 Transport section misfeed 66
8.3.4 Horizontal transport section misfeed 66
8.3.5 Folding position section misfeed 67
8.3.6 Stapler section misfeed 67
8.3.7 Paper stack exit section misfeed 68
9. Trouble code 69
9.1 Trouble code display 69
9.2 Trouble code list 69
9.3 Solution 72
9.3.1 C1180: Transport system drive malfunctions 72
9.3.2 C1181: Paddle motor malfunctions 72
9.3.3 C1183: Elevate mechanism malfunctions 73
9.3.4 C1192: Front aligning plate motor malfunctions 73
9.3.5 C1193: Rear aligning plate motor malfunctions 74
9.3.6 C11A4: Booklet exit motor malfunctions 74
9.3.7 C11B1: Stapler unit slide motor malfunctions 75
9.3.8 C11B4: Stapler/folding motor malfunctions 75
9.3.9 C11C1: Punch control board malfunctions 77
9.3.10 C11C2: Punch side registration motor malfunctions 78
9.3.11 C11C3: Punch motor malfunctions 78
9.3.12 C11C5: Punch sensor malfunctions 79
9.3.13 C1401: Backup RAM malfunction 80

Blank Page

General

1. Product specification

1.1 FS-609

A. Type

Type	Multi staple finisher with saddle (Booklet)
Installation	Freestanding
Document alignment	Center
Supplies	Staple cartridge

B. Functions

Modes	Normal	Group, Sort, Group Offset, Sort Offset, Sort Staple, Center Staple & Fold
	Punch (Option)	Group Punch, Sort Punch, Group Offset Punch, Sort Offset Punch, Sort Staple Punch

C. Paper type

- Remove the finisher off the copier for feeding the long paper.
- The maximum loading capacity shown is for when loading the single type of paper (80g/ m^2)

(1) Group, Sort

Type	Size	Weight	Tray capacity *1			Exit tray	No. of sheets to be stapled
Plain paper	B5S/B5 to A3 wide 5-1/2 × 8-1/2S/ 5-1/2 × 8-1/2 to 12-1/4 × 18	60 to 90 g/m² 16 to 24 lb	No. of Sheet Height	A4S/ 8-1/2 × 11S or smaller 1,000 150 mm	B4/ 8-1/2 × 14 or larger 500 75 mm	Exit tray1	-
Envelop OHP film Label Thick paper		60 to 271 g/m² 16 to 72 lb	20 sheets				

*1: Controlled by whichever reached earlier

(2) Sort offset, Sort group

Type	Size	Weight	Tray capacity			Exit tray	No. of sheets to be stapled
Plain paper	A5, B5S/B5 to A3 8-1/2 × 11S/ 8-1/2 × 11 to 11 × 17	60 to 90 g/m² 16 to 24 lb	No. of Sheets Height	A4S/ 8-1/2 × 11S or smaller 1,000 150 mm	B4/ 8-1/2 × 14 or larger 500 75 mm	Exit tray1	-
			Controlled by whichever reached earlier				

(3) Sort staple

Type	Size	Weight	Tray capacity			Exit tray	No. of sheets to be stapled	
Plain paper Thick paper	B5S/B5 to A3 8-1/2 × 11S/ 8-1/2 × 11 to 11 × 17	Normal Mode 60 to 90 g/m² 16 to 24 lb Cover Mode 60 to 209 g/m² 16 to 55.5 lb		A4S/ 8-1/2 × 11S or smaller	B4/ 8-1/2 × 14 or larger	Exit tray1	Normal mode *1	
			No. of Sheets	1,000	500		A4S/ 8-1/2 × 11S or smaller	B4/ 8-1/2 × 14 or larger
			Height	150 mm	75 mm			
			No. of Sets	30	30		2 to 50	2 to 25
			Controlled by whichever reached earlier					

*1: The number of sheets to be stapled is limited for high-density images.
(Color Wise: 20 sheets x 20 sets)

(4) Center staple & fold

Type	Size	Weight	Tray capacity	Exit tray	No. of sheets to be stapled
Plain paper	A4S, B4, A3 8-1/2 × 11S/ 11 × 17	60 to 90 g/m² 16 to 24 lb	10 sets (No. of Sheets to be Stapled: 6 to 15 sheets) 20 sets (No. of Sheets to be Stapled: 2 to 5 sheets)	Exit tray2	Black copy 2 to 15 sheets (Max. 60 pages) Other copy 2 to 10 sheets (Max. 40 pages)

D. Stapling

Staple filling mode	Dedicated staple cartridge mode (5,000 staples)	
Staple detection	Available (Near empty: 40 remaining staples)	
Stapling position	Rear: Parallel 1 point	B5S/B5 to A3, 8-1/2 × 11S/8-1/2 × 11 to 11 × 17
	Front: Parallel 1 point	
	Side: Parallel 2 points	
	Center: Parallel 2 points	
Manual staple	None	
Folding mode	Roller pressure folding	
Folding position	Center of paper	

E. No. of sheets to be stapled (sort staple)

(1) A4S, 8-1/2 × 11S or smaller

No. of sheets to be stapled	No. of sets		
	Rear: Parallel	Center: Parallel	Front: Parallel
2	100	40	40
3 to 5	80	40	40
6 to 10	60	40	40
11 to 20	30	30	30
21 to 30	30	30	30
31 to 50	30 sets or 1,000 sheets		

(2) B4, 8-1/2 × 14 or larger

No. of sheets to be stapled	No. of sets		
	Rear: Parallel	Center: Parallel	Front: Parallel
2	100	50	50
3 to 5	80	40	40
6 to 10	40	40	40
11 to 20	30 sets or 1,000 sheets		
21 to 25			

F. Machine specifications

Power requirements	DC 24 V (supplied from the main body)
	DC 5 V (generated by finisher)
Max. power consumption	65 W or less
Dimensions	601 mm (W) × 603 mm (D) × 933 mm (H) 23.75 inch (W) × 23.75 inch (D) × 36.75 inch (H)
Weight	42.0 kg (92.5 lb)

G. Operating environment

Conforms to the operating environment of the main body.

NOTE

- **These specifications are subject to change without notice.**

1.2 PK-501

A. Type

No. of holes (optional)	Metric: 4 holes, Inch: 2 holes / 3 holes

B. Paper

Type	Size		Weight	Tray capacity	Exit tray	No. of sheets to be stapled
Plain paper Thick paper	4 holes	A4, A3	60 to 209 g/m² 16 to 55.5 lb	-	Elevator tray	-
	2 holes	8-1/2 × 11S/8-1/2 × 11, 8-1/2 × 14, 11 × 17				
	3 holes	8-1/2 × 11, 11 × 17				

C. Machine specifications

Power requirements	Supplied from FS-609
Dimensions	90 mm (W) × 530 mm (D) × 170 mm (H) 3.75 inch (W) × 20.75 inch (D) × 6.75 inch (H)
Weight	2.6 kg (5.75 lb)

D. Operating environment

Conforms to the operating environment of the main body.

NOTE

- **These specifications are subject to change without notice.**

Maintenance

2. Other

2.1 Disassembly/adjustment prohibited items

A. Paint-locked screws

NOTE

- **To prevent loose screws, a screw lock in blue or green series color is applied to the screws.**
- **The screw lock is applied to the screws that may get loose due to the vibrations and loads created by the use of machine or due to the vibrations created during transportation.**
- **If the screw lock coated screws are loosened or removed, be sure to apply a screw lock after the screws are tightened.**

B. Red-painted screws

NOTE

- **The screws which are difficult to be adjusted in the field are painted in red in order to prevent them from being removed by mistake.**
- **Do not remove or loosen any of the red-painted screws in the field. It should also be noted that, when two or more screws are used for a single part, only one representative screw may be marked with the red paint.**

C. Variable resistors on board

NOTE

- **Do not turn the variable resistors on boards for which no adjusting instructions are given in Adjustment/Setting.**

D. Removal of PWBs

⚠ CAUTION

- **When removing a circuit board or other electrical component, refer to "Handling of PWBs" and follow the corresponding removal procedures.**
- **The removal procedures given in the following omit the removal of connectors and screws securing the circuit board support or circuit board.**
- **Where it is absolutely necessary to touch the ICs and other electrical components on the board, be sure to ground your body.**

2.2 Disassembly/Assembly list (Other parts)

No	Section	Part name	Ref. page
1	Exterior parts	Exit tray	P.7
2		Front cover	P.7
3		Rear cover	P.8
4		Upper door	P.8
5		Finisher tray upper cover	P.9
6		Upper cover	P.10
7	Unit	Horizontal transport unit	P.10
8		Side guide	P.11
9		Middle transport unit	P.12
10		Stapler	P.14
11		Saddle section	P.14
12		Finisher tray	P.16
13		Paddle section	P.17
14		Exit roller (upper)	P.18
15		Paddle	P.20
16		Exit roller (lower) and paper exit belt	P.21
17		stapler/folding drive unit	P.24
18		Transport roller	P.26
19		Middle transport roller	P.28
20		Punch unit	P.29
21	Electrical parts	Finisher control board	P.31
22		Punch control board	P.31
23		Transport motor unit	P.31
24		Entrance motor	P.32
25		Punch motor	P.32
26		Side registration motor	P.32

2.3 Disassembly/Assembly procedure

2.3.1 Exit tray

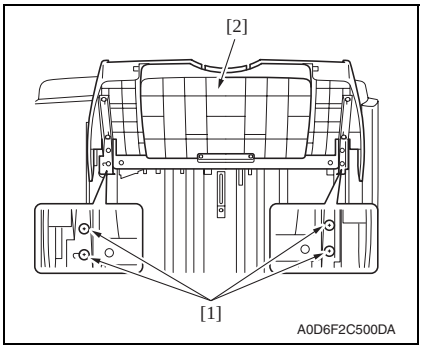

1. Remove four screws [1], and remove the exit tray [2].

2.3.2 Front cover

1. Remove the horizontal transport unit. See P.10
2. Remove the middle transport unit. See P.12

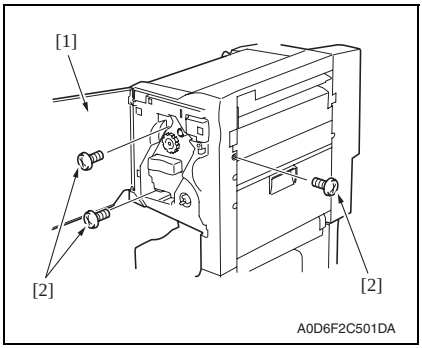

3. Open the front door [1].
4. Remove three screws [2].

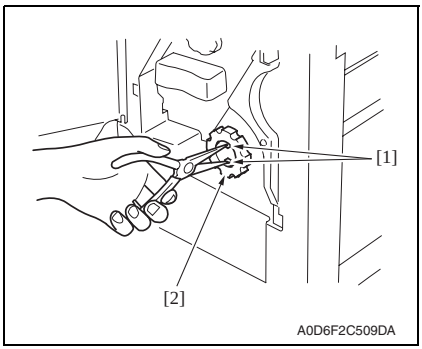

5. Using long nose pliers or a similar tool, pinch the tabs [1] and remove the misfeed-clearing dial [2].

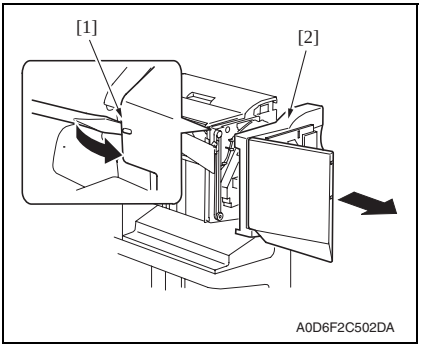

6. Using a screwdriver or a similar tool, unhook the tab [1] and remove the front cover [2].

2.3.3 Rear cover

1. Remove the horizontal transport unit. See P.10
2. Remove the middle transport unit. See P.12

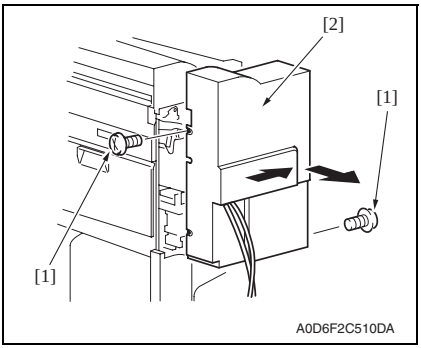

3. Remove two screws [1], and remove the rear cover [2].

2.3.4 Upper door

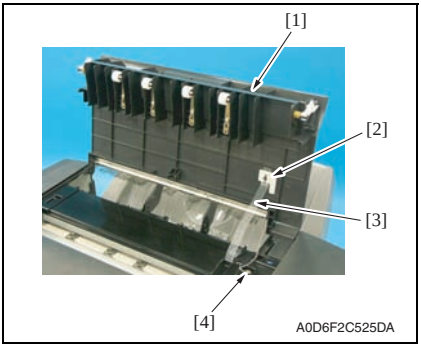

1. Open the upper door [1], and remove the door band holder [2] by turning it clockwise.
2. Remove the door band [3].
3. Remove the screw [4], and remove the grounding wire.

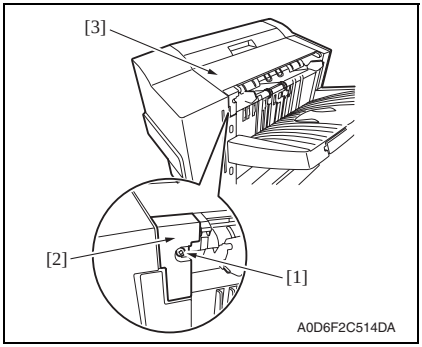

4. Remove the screw [1], remove the finisher tray rear cover [2].
5. Remove the upper door [3].

2.3.5 Finisher tray upper cover

1. Remove the front cover.
See P.7
2. Remove the rear cover.
See P.8
3. Remove the upper door.
See P.8

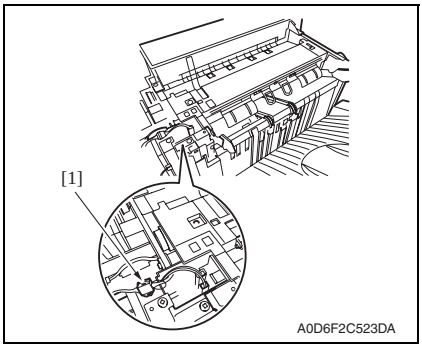

4. Disconnect the connector [1].

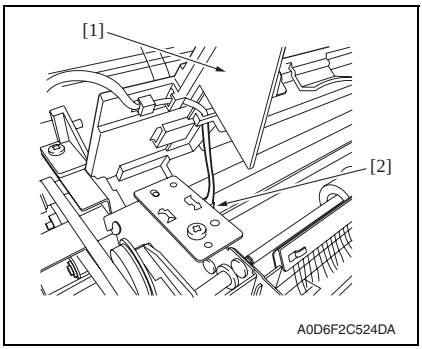

5. Disconnect the connector [2] while holding up the finisher tray upper cover [1], and remove the finisher tray upper cover [1].

2.3.6 Upper cover

1. Remove the front cover.
See P.7
2. Remove the rear cover.
See P.8

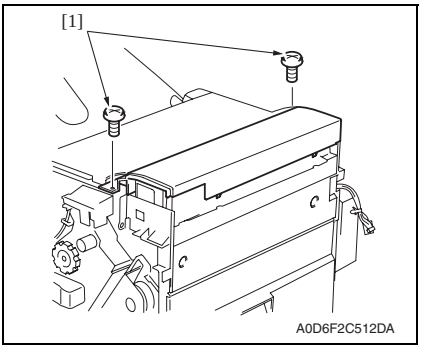

3. Remove two screws [1].

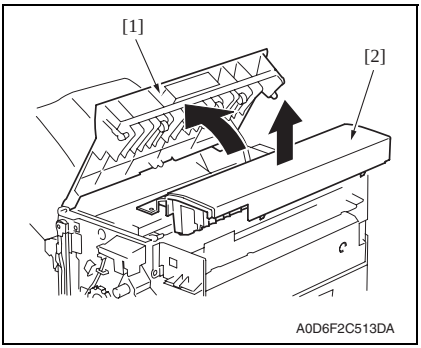

4. Open the upper door [1], and remove the upper cover [2].

2.3.7 Horizontal transport unit

1. Disconnect and move the finisher away from the main body.

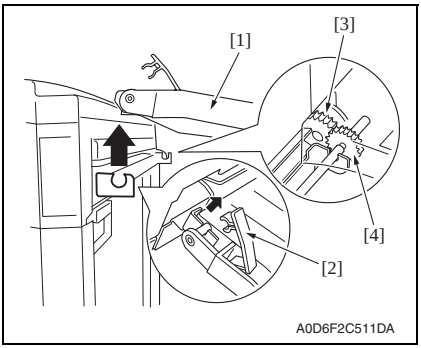

2. Raise the horizontal transport unit [1] straight upward and, keeping that condition, disengage the lock lever [2] and remove the horizontal transport unit [1].

NOTE

- **At reinstallation, be sure to engage the lock lever [2] in position.**
- **At reinstallation, make sure that the gear [3] of the finisher is in positive mesh with the gear [4] of the horizontal transport unit.**

2.3.8 Side guide

1. Remove the exit tray.
See P.7
2. Remove the front cover.
See P.7
3. Remove the rear cover.
See P.8

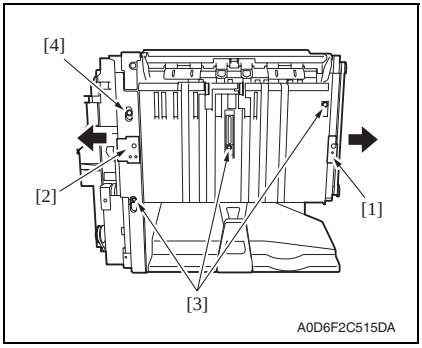

4. Derail the exit tray support plate (front) [1] and the exit tray support plate (rear) [2] to the outside off the respective rail grooves.
5. Remove three screws [3] and the shoulder screw [4].

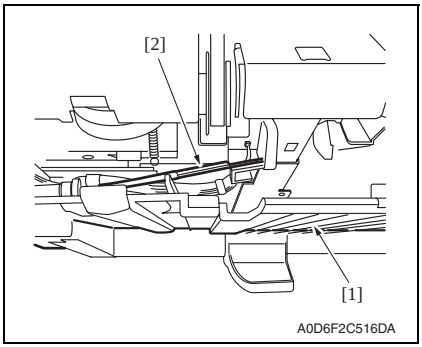

6. Pull down the side guide [1] lightly, disengage the exit tray home position detecting lever (rear) [2], and then remove the side guide [1].

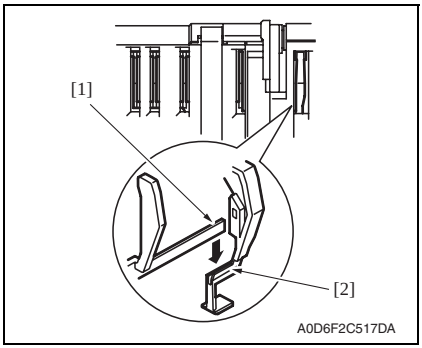

NOTE

- **In reassembling, ensure of exact installation with the exit tray home position detecting lever (rear) [1] set in the slot of the exit tray home position detecting lever (center) [2].**
- **After reassembly, press each of these levers for several times to make sure of exact installation.**

2.3.9 Middle transport unit

1. Remove the horizontal transport unit.
See P.10

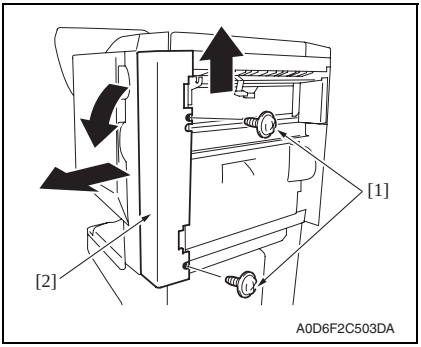

2. Remove two screws [1], and remove the middle front cover [2].

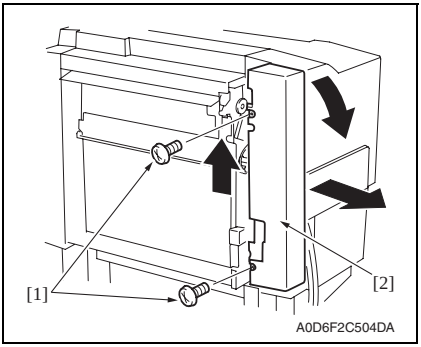

3. Remove two screws [1], and remove the middle rear cover [2].

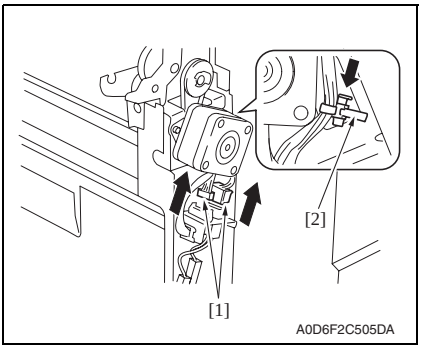

4. Disconnect two connectors [1].
5. Pinch the tie band [2], and remove it from the sheet metal.

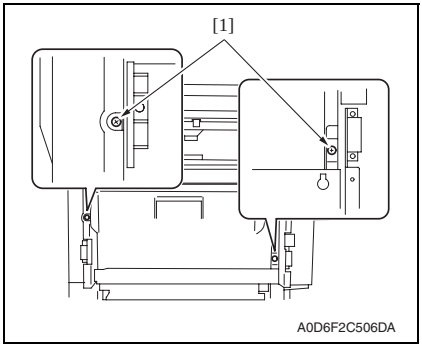

6. Remove two screws [1].

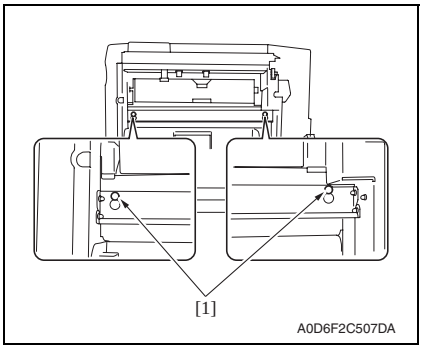

7. Loosen two screws [1].

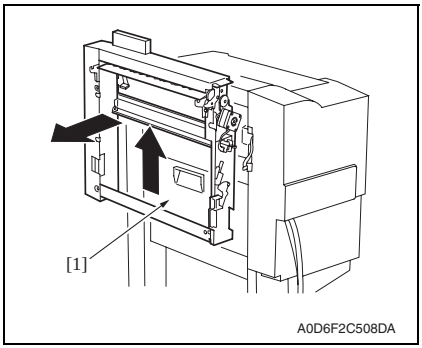

8. Remove the middle transport unit by sliding it upwards.

2.3.10 Stapler

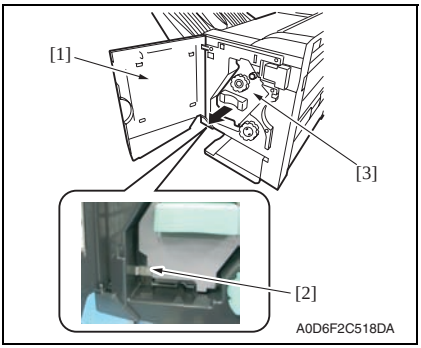

1. Open the front door [1].
2. Pull out the stapler [3] while pressing the stop lever [2].

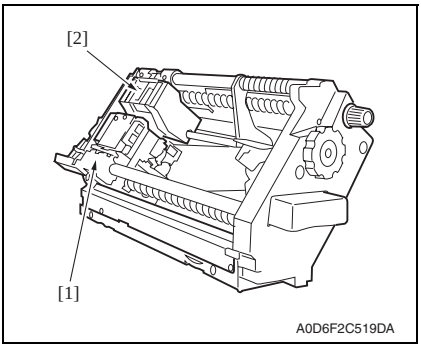

NOTE

- **Do not remove the stapler from the shaft of the stapler frame, or displacement will be caused between the position to which the staple driver [1] (the lower unit of the stapler) feeds staples and the position from which the staple clincher [2] (the upper unit of the stapler) receives them.**

2.3.11 Saddle section

1. Remove the front cover.
See P.7
2. Remove the rear cover.
See P.8
3. Remove the punch dust box.

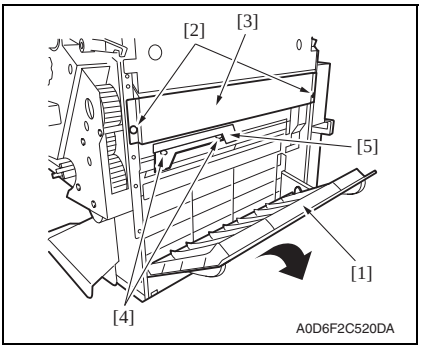

4. Open the jam access cover [1], remove two screws [2], and remove the right stay [3].
5. Remove two screws [4], and remove the lever [5].

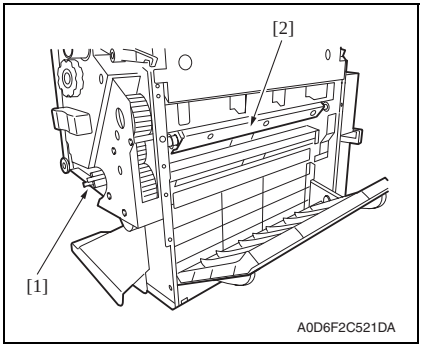

6. Turn the folding jam release dial [1] to move the paper pressure [2] inside.

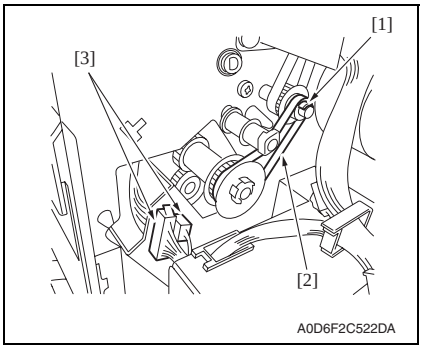

7. Remove the C-clip [1], and remove the belt [2].
8. Disconnect two connectors [3].

9. Remove the stapler.
See P.14

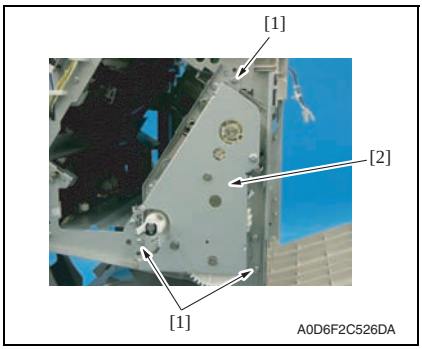

10. Remove three screws [1], and pull out and remove the saddle [2].

2.3.12 Finisher tray

1. Remove the finisher tray upper cover.
See P.9
2. Remove the side guide.
See P.11

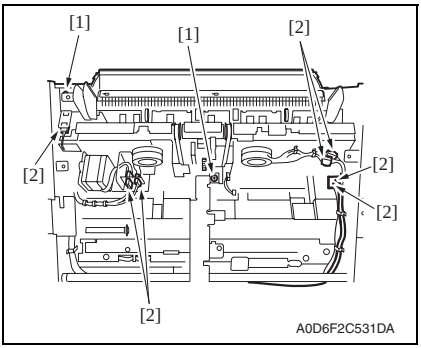

3. Remove two screws [1], and disconnect seven connectors [2].

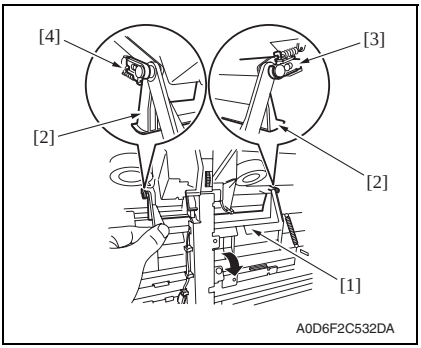

4. Pull out the finisher stopper base [1], and disengage the front claw [3] and the rear claw [4] of the finisher stopper [2].

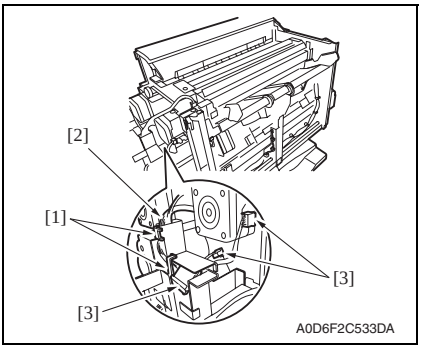

5. Remove the motor harness [2] from two harness saddles [1].
6. Disconnect three connectors [3].

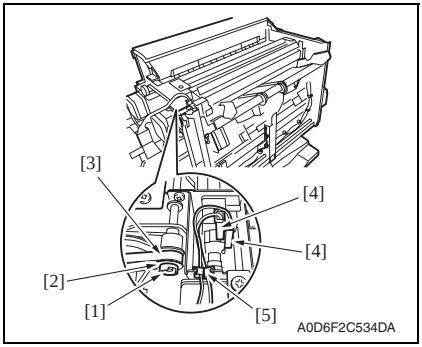

7. Remove the C-clip [1], and remove the spacer [2], and remove the belt [3] from the gear.
8. Disconnect the connector [4], and remove the harness from the wire saddle [5].

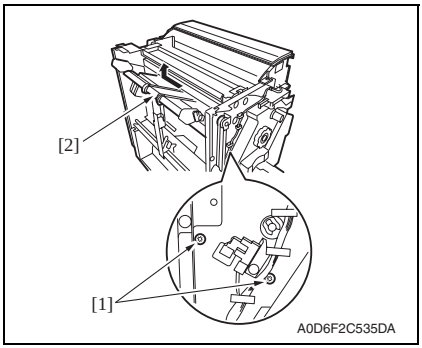

9. Remove two screws [1], and remove the finisher tray [2] by sliding it to the far side and lifting it.

2.3.13 Paddle section

1. Remove the finisher tray.
See P.16

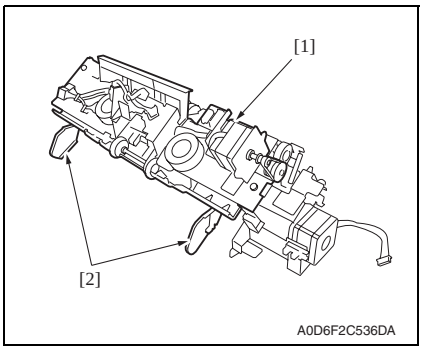

2. Place the finisher tray [1] as shown in the figure.

NOTE

- **Be careful not to damage the aligning plate [2].**

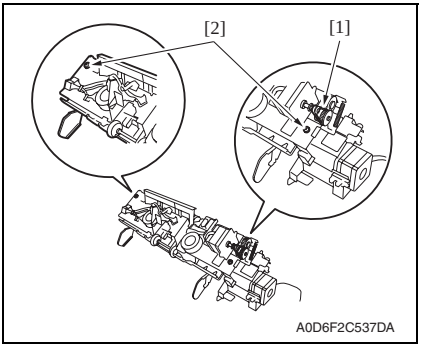

3. Remove the belt [1], and remove two screws [2].

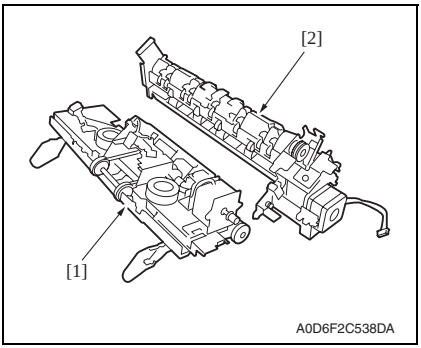

4. Separate the section into the tray section [1] and the paddle section [2].

2.3.14 Exit roller (upper)

1. Remove the paddle section.
See P.17

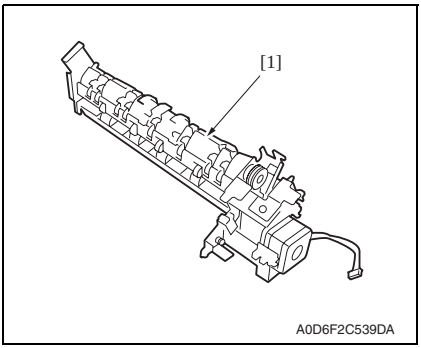

2. Place the paddle section [1] as shown in the figure.

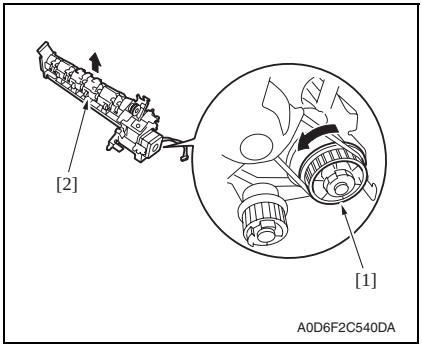

3. Turn the gear [1] in the direction indicated by an arrow to move up the exit roller (upper) section [2].

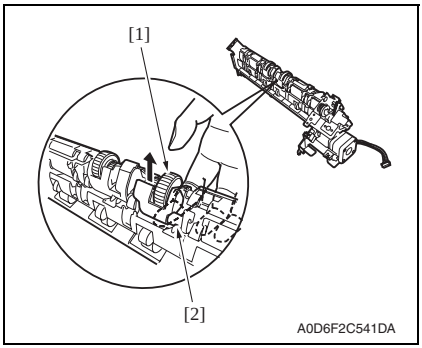

4. Push up the exit roller (upper) [1] from the bottom to release it from the shaft [2].

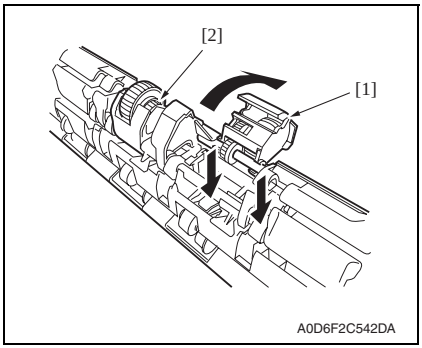

5. Turn up the exit roller (upper) [1], and then push it down to remove it.
6. Remove the front exit roller (upper) [2] as well in the same way.

2.3.15 Paddle

1. Remove the paddle section.
See P.17

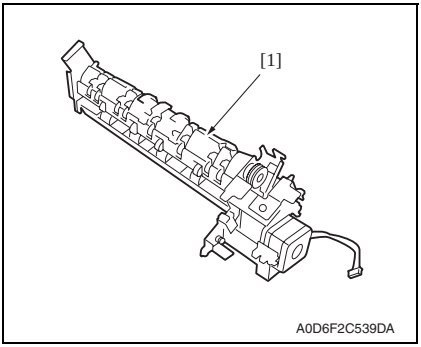

2. Place the paddle section [1] as shown in the figure.

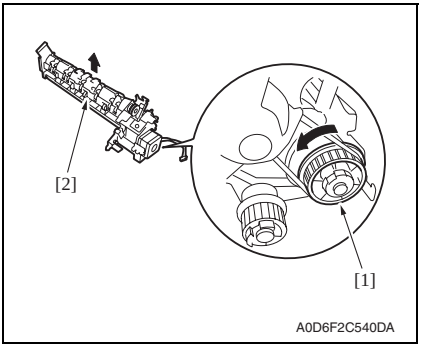

3. Turn the gear [1] in the direction indicted by an arrow to move up the exit roller (upper) section [2].

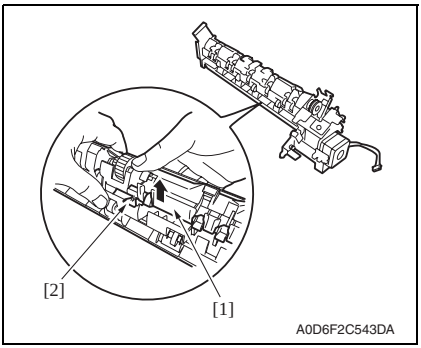

4. Push up the safety guide [1] from the bottom to release it on one side from the shaft [2].

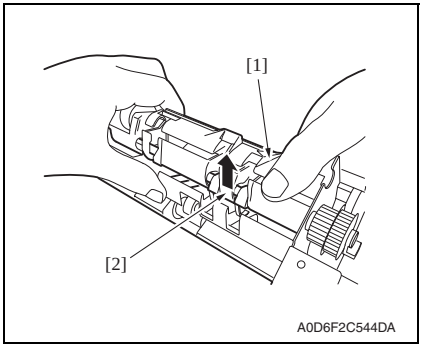

5. Push up the safety guide [1] from the bottom to release it from the shaft [2] and remove it.

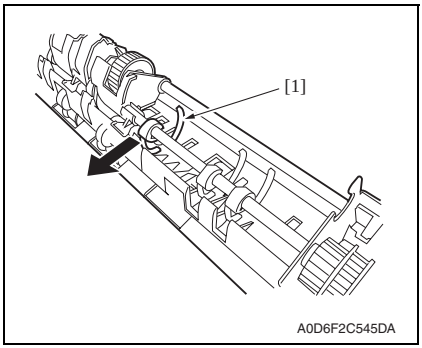

6. Remove the paddle [1].
7. Remove the other paddles as well in the same way.

2.3.16 Exit roller (lower) and paper exit belt

1. Remove the tray section.
See P.17

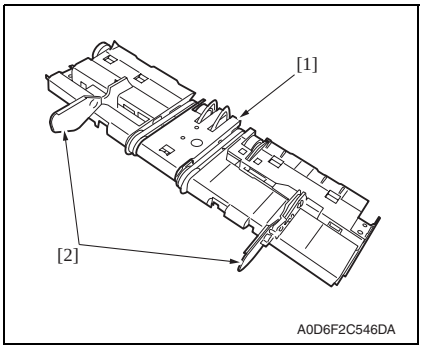

2. Slide the aligning plate (front) [2] and the aligning plate (rear) [3] outside to remove them from the tray [1].

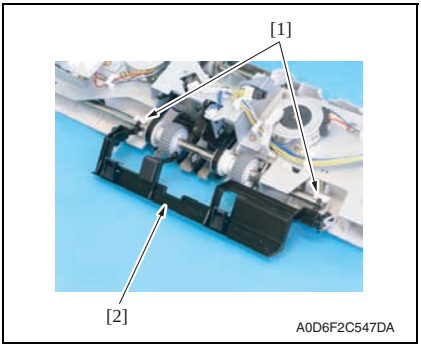

3. Remove two holders [1], and remove the finisher tray stopper [2].

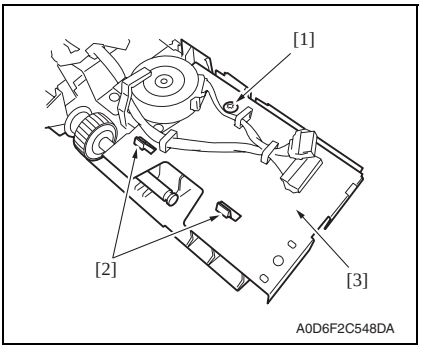

4. Remove the screw [1], and remove the paper guide (front) [3] while disengaging two claws [2].

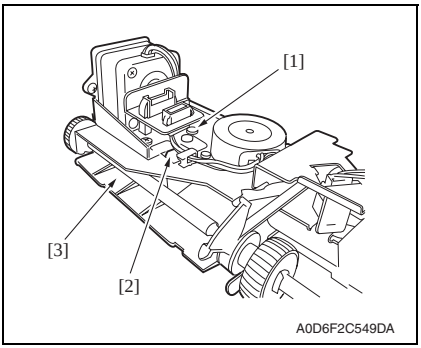

5. Remove the screw [1], and remove the paper guide (rear) [3] while disengaging the claw [2].

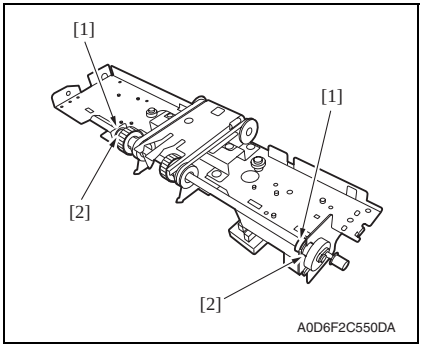

6. Remove two C-clips [1], and move two bushings [2] inside, respectively.

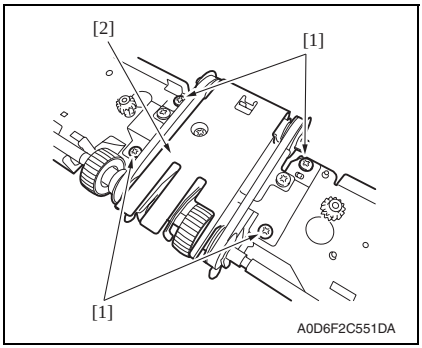

7. Remove four screws [1], and remove the exit roller (lower) section [2] by lifting it.

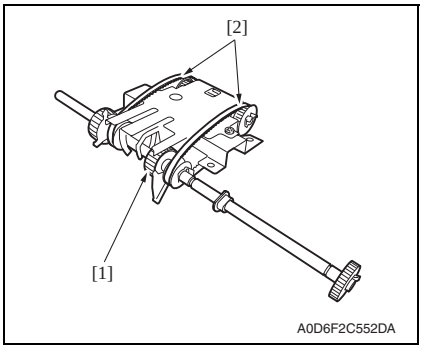

8. Remove the exit roller (lower) [1] and two paper exit belts [2].

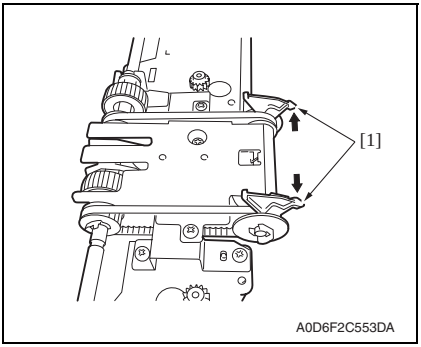

NOTE

- **When installing, align the edge of claws of the paper exit belt [1].**

2.3.17 Stapler/folding drive unit

1. Remove the rear cover.
See P.8

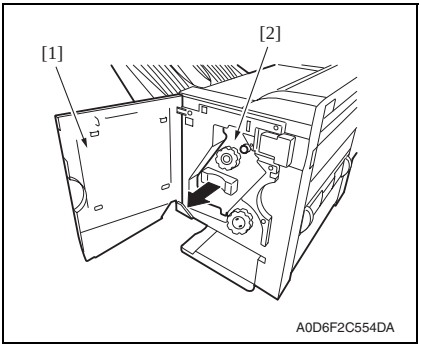

2. Open the front door [1], and slightly pull out the stapler section [2].

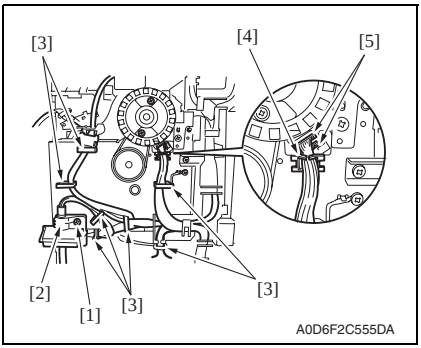

3. Remove screw [1], and remove the interface cable presser [2].
4. Remove the harness from seven wire saddles [3].
5. Remove the harness from the wire saddle [4], and disconnect two connectors [5].

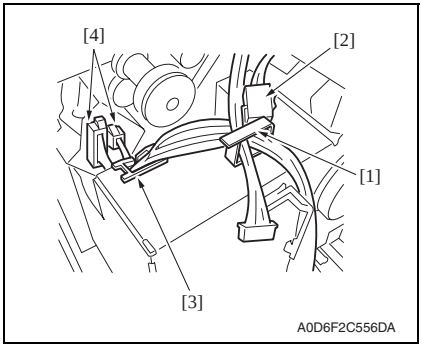

6. Remove the harness from the harness saddle [1], and disconnect the connector [2].

7. Remove the harness from the wire saddle [3], and disconnect two connectors [4].

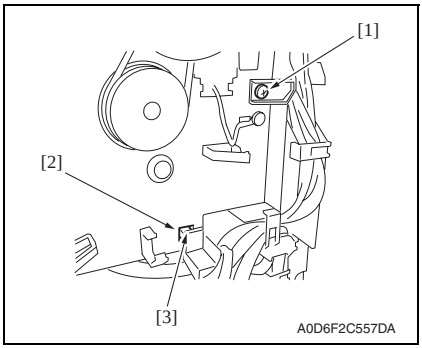

8. Remove the screw [1], and remove the claw [3] of harness guide from the square hole [2] in the base plate.

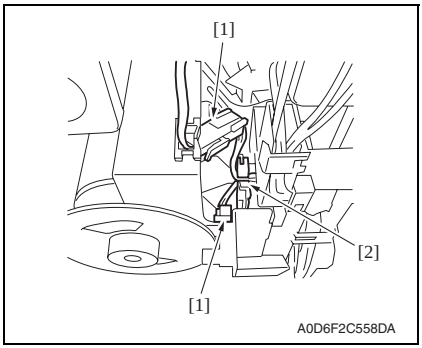

9. Disconnect two connectors [1], and remove the harness from the wire saddle [2].

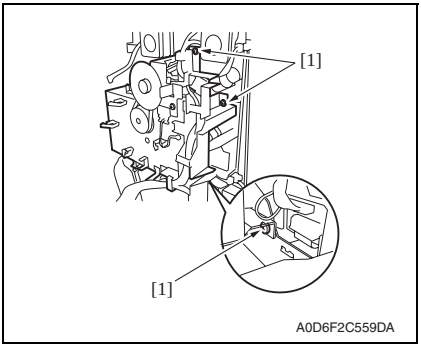

10. Remove three screws [1].

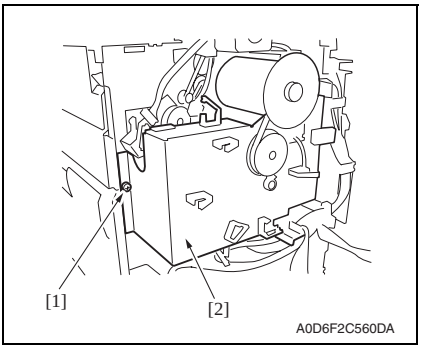

11. Remove the screw [1], and remove the stapler/folding drive unit [2].

2.3.18 Transport roller

1. Remove the upper door.
See P.8

2. Remove the upper cover.
See P.10

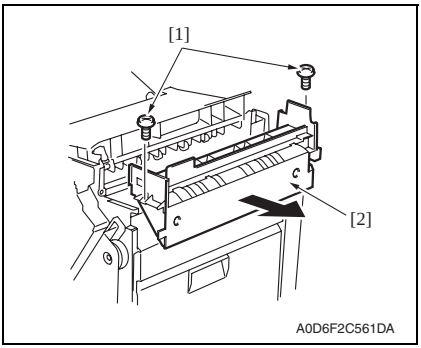

3. Remove two screws [1], and remove the upper cover unit [2].

4. Remove the transport motor unit.
See P.31

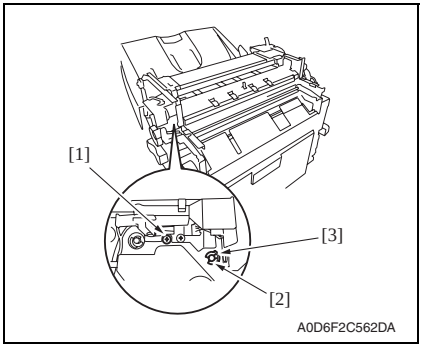

5. Remove the screw [1].
6. Remove the C-clip [2], and remove the bushing [3].

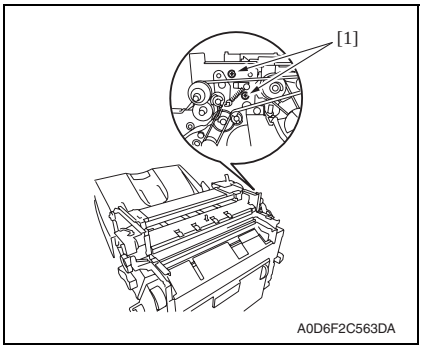

7. Remove two screws [1].

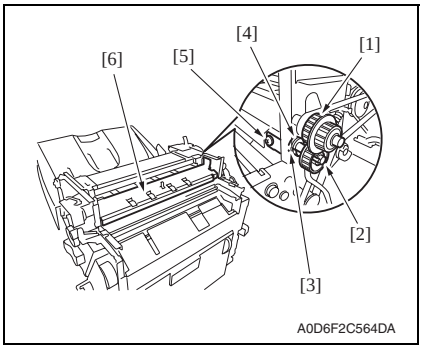

8. Remove the gear 1 [1], and remove the gear 2 [2] while disengaging the claw.

NOTE

- **Be careful not to lose the gear pin.**

9. Remove the C-clip [3], and remove the bushing [4].
10. Remove the screw [5], and remove the paper guide (lower) [6].

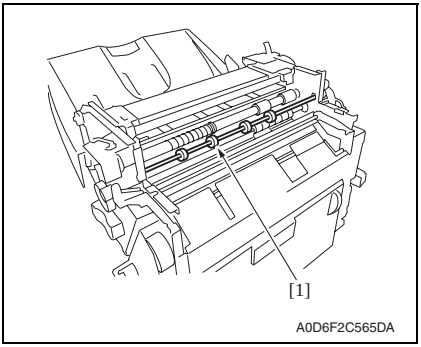

11. Remove the transport roller [1].

2.3.19 Middle transport roller

1. Remove the middle front cover and the middle rear cover.
See P.12

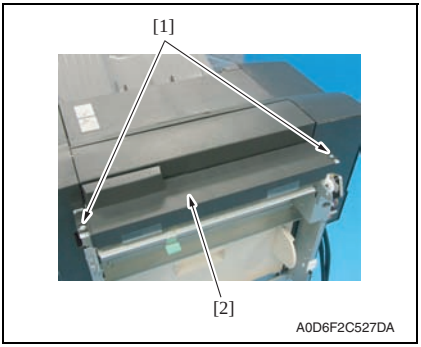

2. Remove two screws [1], and remove the middle upper cover [2].

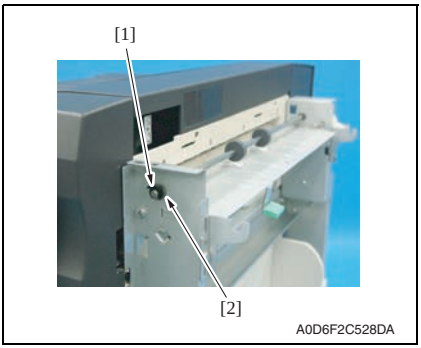

3. Remove the C-clip[1], and remove the bushing [2].

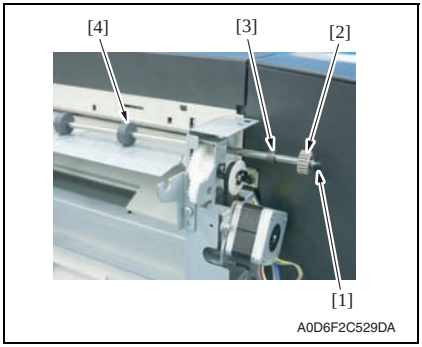

4. Shift the shaft assy in the orientation as shown on the left.
5. Remove the C-clip [1], the gear [2], the bushing [3], and remove the middle transport roller [4].

2.3.20 Punch unit

1. Remove the punch trash box.

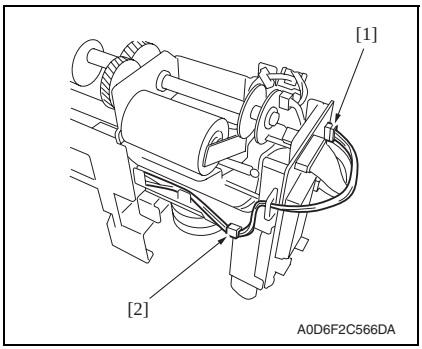

2. Disconnect the connector J1005 [1].
3. Remove the harness from the harness guide [2].

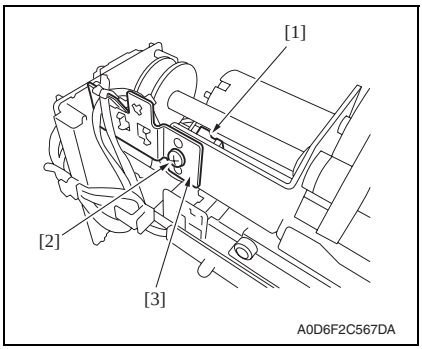

4. Disconnect the connector [1].
5. Remove the screw [2], and remove the sensor support plate [3].

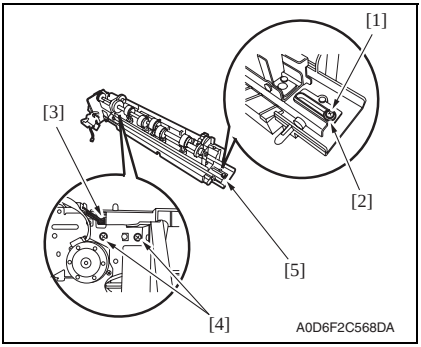

6. Remove the screw [1] and the washer [2].
7. Disconnect the connector [3].
8. Remove two screws [4], and remove the base cover [5].

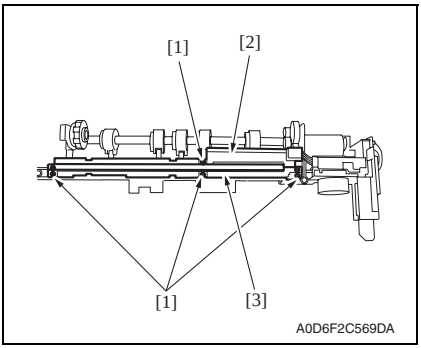

9. Remove four screws [1], and remove the Sensor unit (upper) [2] and the sensor unit (lower) [3].

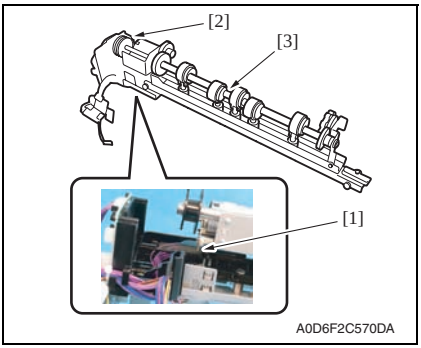

10. Remove the spring [1].
11. Remove the punch unit [2] from the side registration motor section [3].

2.3.21 Finisher control board (FSCB)

1. Remove the rear cover.
See P.8

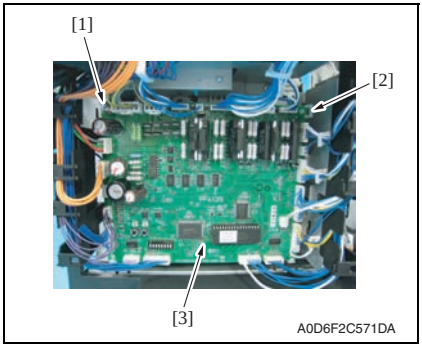

2. Disconnect all connectors on the board, and remove the screw [1].
3. Release the PCB support [2], and remove the finisher control board [3].

2.3.22 Punch control board (PKCB)

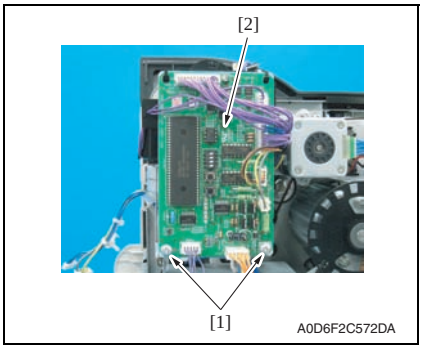

1. Remove two screws [1].
2. Disconnect all connectors, and remove the punch control board [2].

2.3.23 Transport motor unit

1. Remove the rear cover.
See P.8

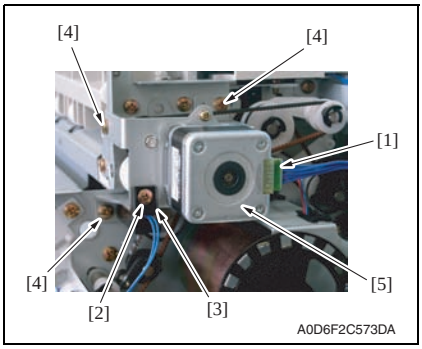

2. Disconnect the connector [1].
3. Remove screw [2], and remove the harness guide [3].
4. Remove three screws [4], and remove the transport motor unit [5].

2.3.24 Entrance motor

1. Remove the middle rear cover.
See P.12

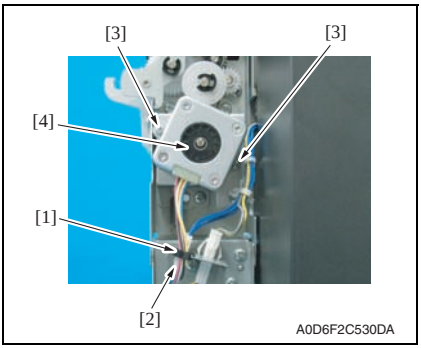

2. Remove the harness from the wire saddle [1].
3. Disconnect the connector [2].
4. Remove two screws [3], remove the entrance motor [4].

2.3.25 Punch motor

1. Remove the upper cover.
See P.10

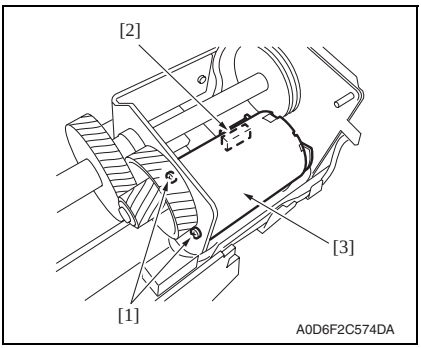

2. Remove two screws [1].
3. Disconnect the connector [2], and remove the punch motor [3].

2.3.26 Side registration motor

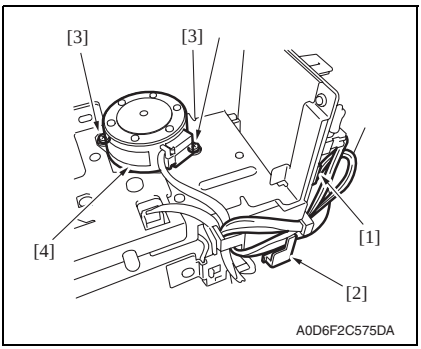

1. Disconnect the connector J1001 [1].
2. Remove the harness from the harness guide [2].
3. Remove two screws [3], and remove the side registration motor [4].

Adjustment/Setting

3. How to use the adjustment section

- "Adjustment/Setting" contains detailed information on the adjustment items and procedures for this machine.
- Throughout this "Adjustment/Setting," the default settings are indicated by " ".

Advance Checks
Before attempting to solve the customer problem, the following advance checks must be made. Check to see if:

- The power supply voltage meets the specifications.
- The power supply is properly grounded.
- The machine shares the power supply with any other machine that draws large current intermittently (e.g., elevator and air conditioner that generate electric noise).
- The installation site is environmentally appropriate: high temperature, high humidity, direct sunlight, ventilation, etc.; levelness of the installation site.
- The original has a problem that may cause a defective image.
- The density is properly selected.
- The Original Glass, slit glass, or related part is dirty.
- Correct paper is being used for printing.
- The units, parts, and supplies used for printing (developer, PC Drum, etc.) are properly replenished and replaced when they reach the end of their useful service life.
- Toner is not running out.

⚠ Caution
- **Be sure to unplug the power cord of the machine before starting the service job procedures.**
- **If it is unavoidably necessary to service the machine with its power turned ON, use utmost care not to be caught in the Scanner Cables or gears of the Exposure Unit.**
- **Special care should be used when handling the Fusing Unit which can be extremely hot.**
- **The Developing Unit has a strong magnetic field. Keep watches and measuring instruments away from it.**
- **Take care not to damage the PC Drum with a tool or similar device.**
- **Do not touch IC pins with bare hands.**

4. Sensor check

4.1 Check procedure

1. Call the Service Mode to the screen.
   See P.298 of the main body service manual.
2. Touch the [State Confirmation] key.
3. Touch the [Sensor Check] key.
4. Touch five times [▼].

4.1.1 Sensor check screen

- This is only typical screen which may be different from what are shown on each individual main body.

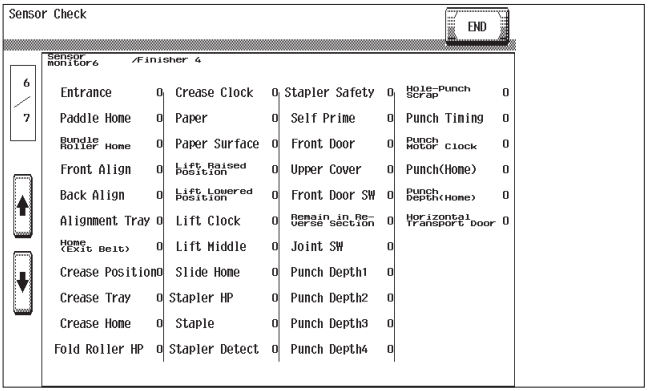

A0D6F3E529DA

4.1.2 Sensor check list

Symbol	Panel display		Part/Signal name	Operation characteristics/ Panel display	
				1	0
PS1	Sensor monitor 6 / Finisher 4	Entrance	Entrance sensor	Paper present	Paper not present
PS2		Paddle Home	Paddle home position sensor	At home	Not at home
PS3		Bundle Roller Home	Bundle exit roller home position sensor	At home	Not at home
PS4		Front Align	Front aligning plate home position sensor	At home	Not at home
PS5		Back Align	Rear aligning plate home position sensor	At home	Not at home
PS6		Alignment Tray	Finisher tray sensor	Paper present	Paper not present
PS7		Home (Exit Belt)	Exit belt home position sensor	At home	Not at home
PS10		Crease Position	Folding position sensor	Paper present	Paper not present
PS13		Crease Tray	Saddle tray sensor	Paper present	Paper not present
PS11		Crease Home	Folding home position sensor	At home	Not at home
PS12		Fold Roller HP	Folding roller home position sensor	At home	Not at home
PS14		Crease Clock	Staple/folding motor clock sensor	Blocked	Unblocked
PS8		Paper	Exit tray sensor	Paper present	Paper not present
PS9		Paper Surface	Exit tray home position sensor	Detected	
PS15		Lift Raised Position	Lift upper limit sensor	Upper limit	
PS16		Lift Lowered Position	Lift lower limit sensor	Lower limit	
PS17		Lift Clock	Lift motor clock sensor	Blocked	Unblocked
—		Lift Middle	—	Full	
PS18		Slide Home	Slide home position sensor	Not at home	At home
PS19		Stapler HP	Stapler drive home position sensor	At home	Not at home
PS20		Staple	Staple detecting sensor	Supplied	Empty
—		Stapler Detect	—		Detected
SW3 SW4		Stapler Safety	Stapler safely switch (Rear) Stapler safely switch (Front)	Open	Close
PS21		Self Prime	Self-priming sensor		Ready
PS22		Front Door	Front door open sensor	Close	Open
PS23		Upper Cover	Upper cover open sensor	Close	Open
SW1		Front Door SW	Front door open switch	Close	Open
PS27		Remain in Reverse Section	Turnover empty sensor		Horizontal
SW2		Joint SW	Joint open switch	Close	Open
—		Punch Depth 1	—	—	—
—		Punch Depth 2	—	—	—

Symbol	Panel display	Part/Signal name	Operation characteristics/ Panel display	
			1	0
—	Punch Depth 3	—	—	—
—	Punch Depth 4	—	—	—
—	Hole-Punch Scrap	—	Full	
—	Punch Timing	—	—	—
PS3	Punch Motor Clock	Punch motor cock sensor	Blocked	Unblocked
PS1	Punch (Home)	Punch home position sensor	At home	Not at home
PS2	Punch Depth (Home)	Side registration home sensor	At home	Not at home
PS26	Horizontal Transport Door	Horizontal unit door sensor	Blocked	Unblocked

5. Finisher Adjust

5.1 FN-X3 Adjust

5.1.1 Center Staple Pos (Jig software: Center-Staple Position Adj.)

- The stapling position is adjusted by aligning the stapling position to the folding position.
- This adjustment is made in the service mode of the main body. Since the adjustment is made in increments of 1 mm, this adjustment is useful for eliminating a displacement of 1mm or more.
- For the effective adjustment of a minimal displacement smaller than 1 mm, refer to "6. Board switch."
See P.53

Adjustable range: - 7 to + 7 mm (Increment: 1 mm)

A. Control panel

1. Load the feed tray with five or more sheets of A3 or 11x17 paper.
2. Produce five test prints in the center staple mode.

- These five sheets are used for adjustment to minimize variation.

3. Renew the center folding of the printed papers.
   Take the top surface of the printed papers as A, and the under surface as B.
4. Check the deviation of the stapling position from the newly folded position.

NOTE

- **In checking the deviation, refer not to the folded position by the finisher but to the newly folded position.**

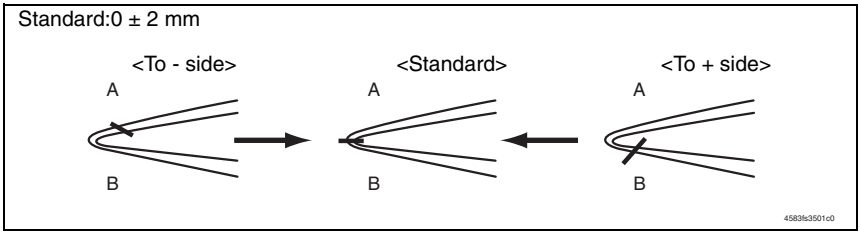

5. Set the mode to the service mode.
See P.228 of the main body service manual.
6. Select [Finisher Adjust] - [FN-X3 Adjust] - [Center Staple Pos].
7. Press the Menu/Select key.
8. Adjust with the ▲/▼ Keys.
   When the stapling position is shifted to the direction A: Adjust the value to the - side.
   When the stapling position is shifted to the direction B: Adjust the value to the + side.
9. Press the Menu/Select key.
10. Turn OFF the power switch, then wait for 10 sec. or more and turn ON the power switch.
11. Run a test print cycle again and check the stapling position.

B. Jig software

1. Load the feed tray with five or more sheets of A3 or 11x17 paper.
2. Produce five test prints in the center staple mode.

• These five sheets are used for adjustment to minimize variation.

3. Renew the center folding of the printed papers.
   Take the top surface of the printed papers as A, and the under surface as B.
4. Check the deviation of the stapling position from the newly folded position.

NOTE

• **In checking the deviation, refer not to the folded position by the finisher but to the newly folded position.**

Standard:0 ± 2 mm

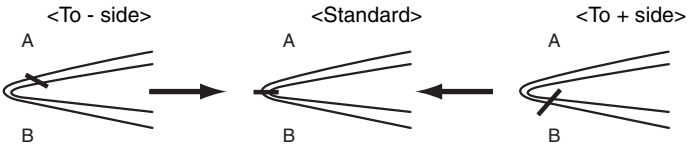

5. Set the mode to the Service Mode.
   See P.298 of the main body service manual.
6. Touch [Finisher].
7. Touch [FN-X3Adjustment].
8. Touch [Center-Staple Position Adj.]

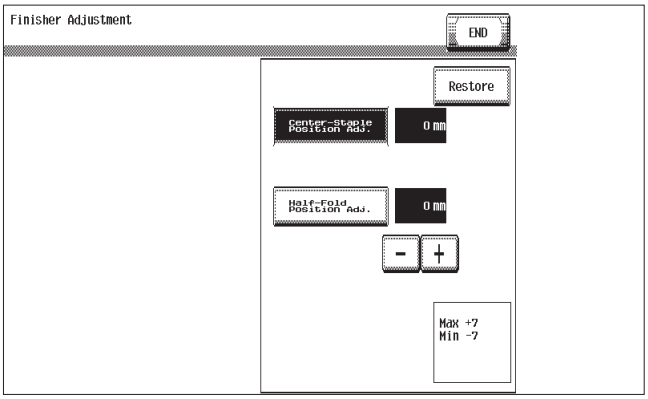

9. Adjust with the [+]/[-] Keys.
   When the stapling position is shifted to the direction A: Adjust the value to the - side.
   When the stapling position is shifted to the direction B: Adjust the value to the + side.
10. Touch [END].
11. Turn OFF the power switch, then wait for 10 sec. or more and turn ON the power switch.
12. Run a test print cycle again and check the stapling position.

5.1.2 Half-Fold Pos. (Jig software: Half-Fold Position Adj.)

- The folding position is adjusted by aligning the folding position to the stapling position.
- This adjustment is made in the service mode of the main body. Since the adjustment is made in increments of 1 mm, this adjustment is useful for eliminating a displacement of 1 mm or more.
- For the effective adjustment of a minimal displacement smaller than 1 mm, refer to 6. Board switch.
See P.53

Adjustment range: - 7 to + 7 mm (Increment: 1 mm)

A. Control panel

1. Load the feed tray with five or more sheets of A3 or 11x17 paper.
2. Produce five test prints in the center staple mode.

- These five sheets are used for adjustment to minimize variation.

3. Check the printed papers for deviation of the stapling position of from the newly folded position.
Take the top surface of the printed papers as A, and the under surface as B.

Standard: 0 ± 2 mm

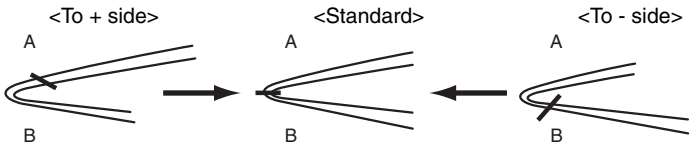

4. Set the mode to the service mode.
See P.228 of the main body service manual.
5. Select [Finisher Adjust] - [FN-X3 Adjust] - [Half-Fold Pos.]
6. Press the Menu/Select key.
7. Adjust with the ▲/▼ Keys.
When the stapling position is shifted to the direction A: Adjust the value to the + side.When the stapling position is shifted to the direction B: Adjust the value to the - side.
8. Press the Menu/Select key.
9. Turn OFF the power switch, then wait for 10 sec. or more and turn ON the power switch.
10. Run a test print cycle again and check the center folding position.

B. Jig software

1. Load the feed tray with five or more sheets of A3 or 11x17 paper.
2. Produce five test prints in the center staple mode.

- These five sheets are used for adjustment to minimize variation.

3. Check the printed papers for deviation of the stapling position of from the newly folded position.
   Take the top surface of the printed papers as A, and the under surface as B.

Standard: 0 ± 2 mm

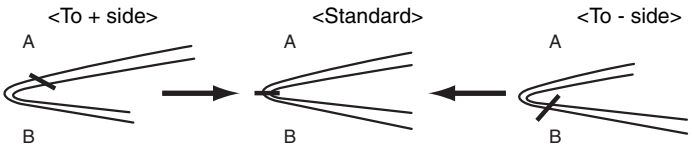

4. Set the mode to the service mode.
   See P.298 of the main body service manual.
5. Touch [Finisher Adjust].
6. Touch [FN-X3Adjustment].
7. Touch [Half-Fold Position Adj.]

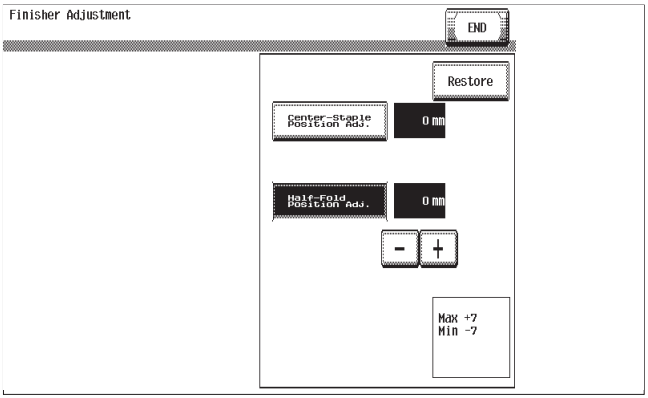

8. Adjust with the [+]/[-] Keys.
   When the stapling position is shifted to the direction A: Adjust the value to the + side.When the stapling position is shifted to the direction B: Adjust the value to the - side.
9. Touch [END].
10. Turn OFF the power switch, then wait for 10 sec. or more and turn ON the power switch.
11. Run a test print cycle again and check the center folding position.

5.2 Punch Option (Jig software: Punch option setting)

5.2.1 Punch Kit type

Functions	• To set installation and model of the punch kit.
Use	• Use when the punch kit is installed.
Setting/ Procedure	• The default setting is Not Installed. "Not Installed" PK-501 PK-515 • Select the model of the punch kit currently installed.

5.2.2 # of Punch-Holes

Functions	• To set the number of holes to be made by the punch kit installed.
Use	• Use when the punch kit is installed.
Setting/ Procedure	• The default setting is 2-Hole. "2-Hole" SWE 4-Hole EU 4-Hole 2-Hole/3-Hole **NOTE** **• Select only the number of holes supported by the punch kit installed.**

6. Mechanical adjustment

6.1 Adjustment of height and inclination

1. Gently move the finisher toward the machine and check for following.

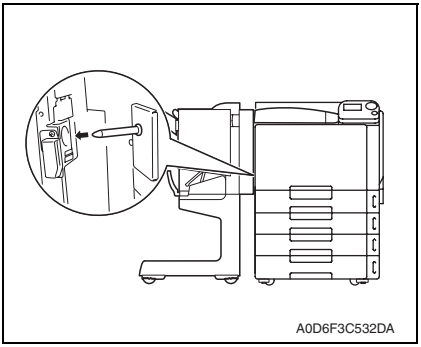

A0D6F3C532DA

- Is the positioning pin aligned with the hole in the finisher?

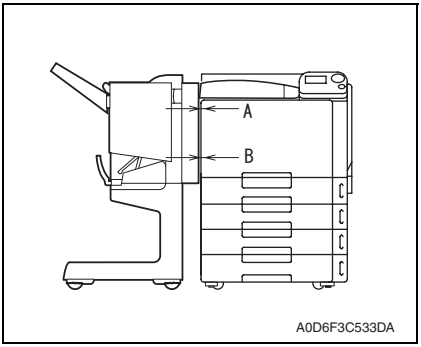

A0D6F3C533DA

- Does the horizontal transport unit run excessively slantwise?
- Does the clearance at A equal that at B?

2. If the finisher is not at the same height as the machine, adjust the machine as follows.

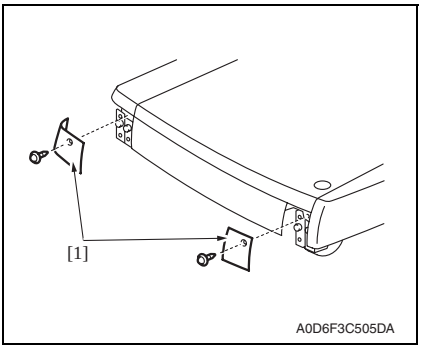

A0D6F3C505DA

3. Remove the finisher from the main body, and remove two caster covers [1].

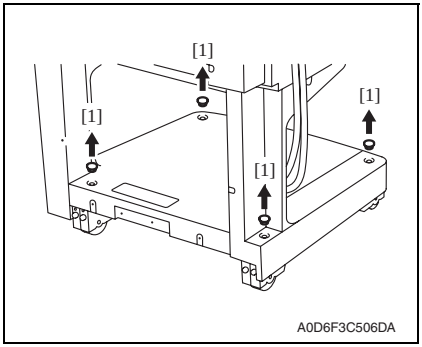

4. Remove four adjusting screw covers [1].

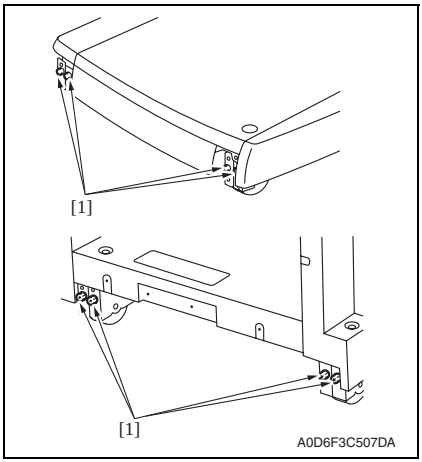

5. Loosen eight caster fixing screws [1].

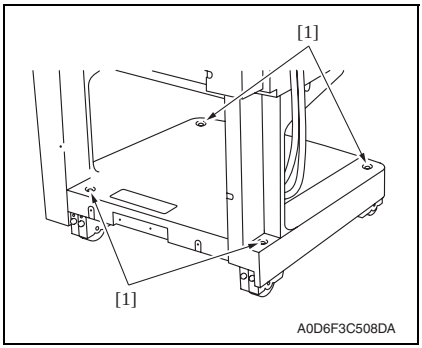

6. Turn the adjustment screw [1] to make adjustment.

- To heighten: Turn the screw counter-clockwise.
- To bring down: Turn the screw clock-wise.

7. Fasten the caster fixing screws.

8. Install the caster covers and the adjustment screw covers.

6.2 Adjustment of the folding position

- Folding position is adjusted by adjusting the tray section and the saddle section.
- Adjust the folding position by aligning the tray section. Adjust the position of the saddle section if the position is still not proper.

<Deviation amount which will be adjusted>

Paper Size	Amount of deviation which will be adjusted by aligning the Tray Section	Amount of deviation which will be adjusted by aligning the Saddle Section position	Total amount which will be adjusted
A3	0.55 mm	0.55 mm	1.1 mm
A4	0.4 mm	0.4 mm	0.8 mm
B4	0.5 mm	0.5 mm	1.0 mm
Ledger	0.55 mm	0.55 mm	1.1 mm
Letter	0.35 mm	0.35 mm	0.7 mm

6.2.1 Adjustment procedure

A. Checking the deviation amount

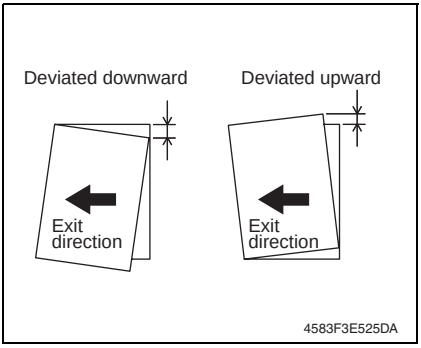

1. Load the paper take-up tray with A3 or 11 x 17 paper.
2. Run a test print cycle in the center staple mode.
3. Check the test print for folding deviation.

B. Adjusting the folding deviation

1. Turn power switch OFF, and remove the finisher from the machine.

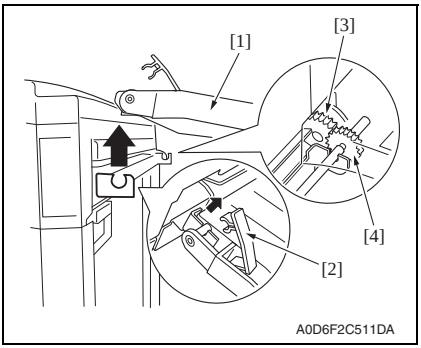

2. Raise the horizontal transport unit [1] straight upward and, keeping that condition, disengage the lock lever [2] and remove the horizontal transport unit [1].

NOTE

- **At reinstallation, be sure to engage the lock lever [2] in position.**
- **At reinstallation, make sure that the gear [3] of the finisher is in positive mesh with the gear [4] of the horizontal transport unit.**

3. Remove the middle transport unit.
See P.12
4. Remove the front cover.
See P.7

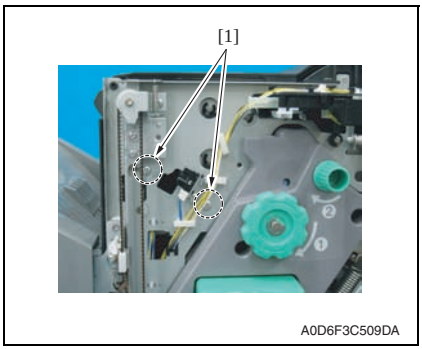

5. Loosen two screws [1] on the tray section.

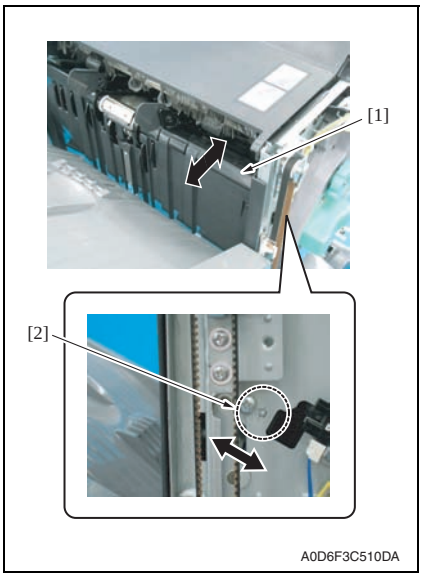

6. Move the tray section [1] back and forth, and move the positioning dowels [2] right and left to adjust.

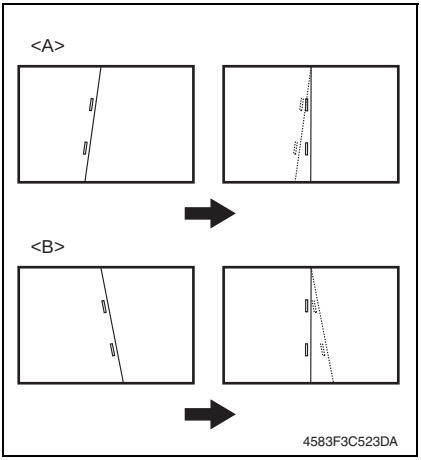

- If it is deviated downward <A>, move the positioning dowels to the left.
- If it is deviated upward <B>, move the positioning dowels to the right.

NOTE

- **The folding line will move along with the staples.**

7. Carry out the test print to see if there is any folding deviation.
If the deviation is not adjusted, repeat the procedure from step 8 to adjust the saddle section position.

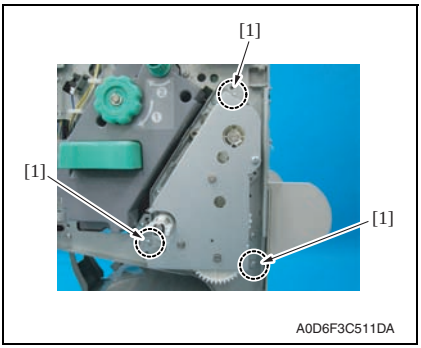

8. Loosen three set screws [1] on the saddle section.

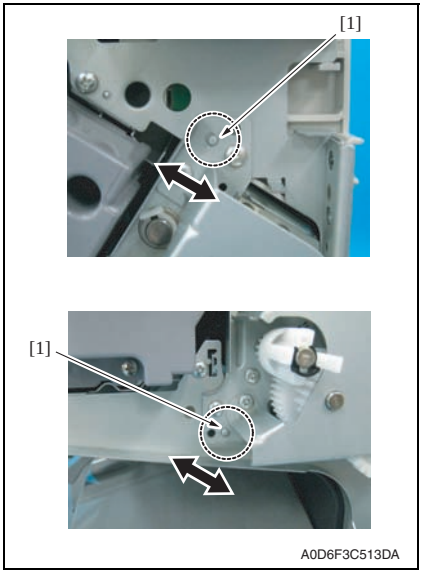

9. Move the two positioning dowels [1] to adjust.

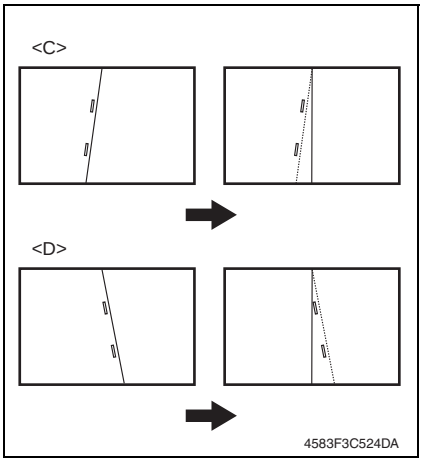

- If it is deviated downward <C>, move the positioning dowel to the left.
- If it is deviated upward <D>, move the positioning dowel to the right.

NOTE

- **Only the folding line will move.**

10. Feed out the test print and check if there is any folding deviation.

6.3 Stapler phase adjustment

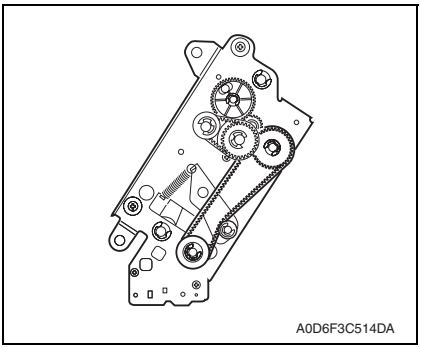

- Make phase adjustment of the stapler following the procedures given below whenever the gear or timing belt in front of the stapler has been replaced or removed for some reason, since such replacement or removal will cause mistiming between the staple driving by the staple driver (the lower unit of the stapler) and the staple clinching by the staple clincher (the upper unit of the stapler).

6.3.1 Adjustment procedure

1. Remove the stapler.
See P.14

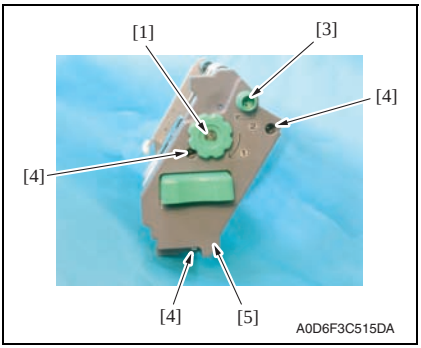

2. Remove the E-ring [1], and remove the jam release dial 1[2].
3. Remove the jam release dial 2 [3].
4. Remove the three screws [4], and remove the stapler front cover [5].

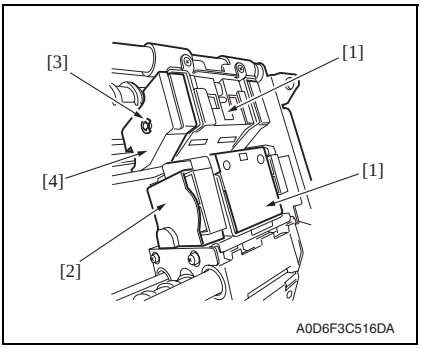

5. Remove the gear cover [2] from the staple driver [1].
6. Remove the E-ring [3], and remove the side cover [5] from the staple clincher [4].

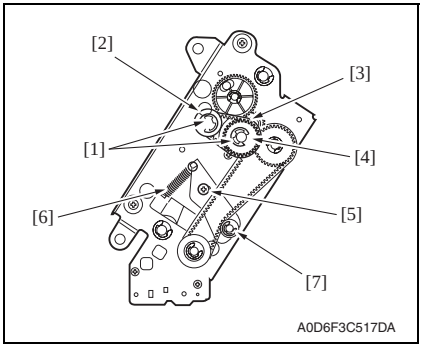

7. Remove two E-rings [1], and remove the staple jam release gear [2], the timing belt [3] and the middle gear 1 [4].
8. Remove the spacer and the spring located behind the staple jam release gear.
9. Remove the screw [5] and the spring [6], and remove the belt tension roller [7].

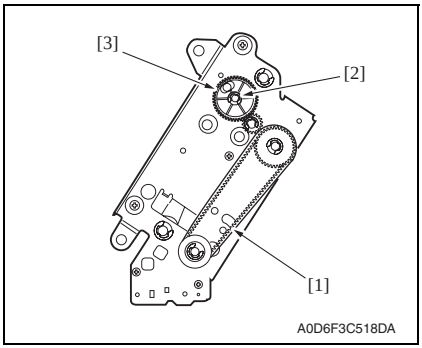

10. Remove the timing belt [1].
11. Remove the E-ring [2], and remove the staple position confirm gear [3].

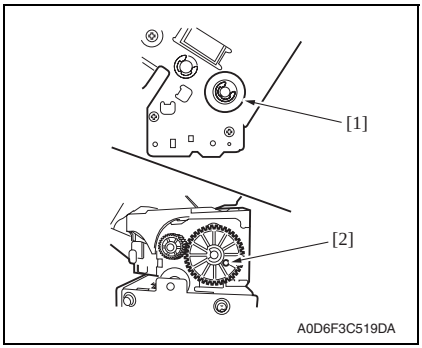

12. Turn the gear [1] to position the hole [2] in the gear of the staple driver to the hole behind.

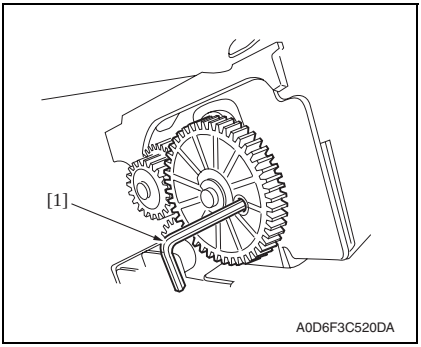

13. Insert a pin of approx. ϕ2 [1] (alternatively, 2 mm hexagonal wrench or the like can be preferably used) into the hole, and fix the gear.

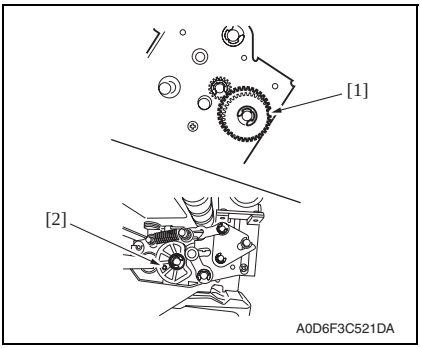

14. Turn the gear [1] to position the hole [2] in the cam of the staple clincher to the hole behind.

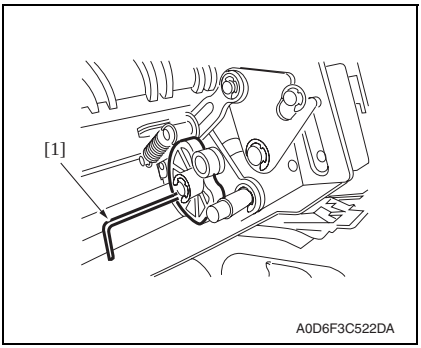

15. Insert a pin of approx.ϕ2 [1] (alternatively, 2 mm hexagonal wrench or the like can be preferably used) into the hole, and fix the cam.

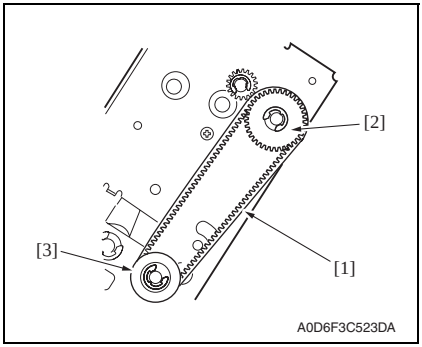

16. Set the timing belt [1] to the gear [2] and gear [3] with the gear and the cam in the fixed condition.

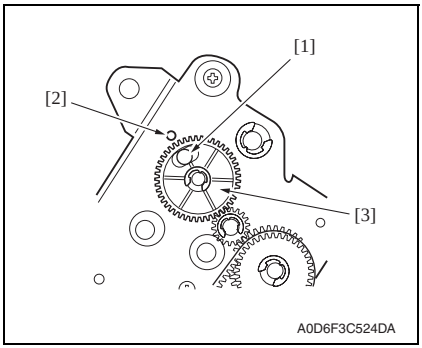

17. Install the staple position confirm gear [3] in such a way that the blue mark [1] of the gear comes face to face with the hole [2] in the frame.

NOTE

- **The position in which the blue mark meets face to face with the hole is the home position for stapling. If the staple jam release gear is turned for some reason, this home position will shift and the staple cartridge will not come off. In this case, the staple position confirm gear plays a role of resuming the stapling home position by referring to the blue mark. Therefore, the gear should be set in place correctly.**

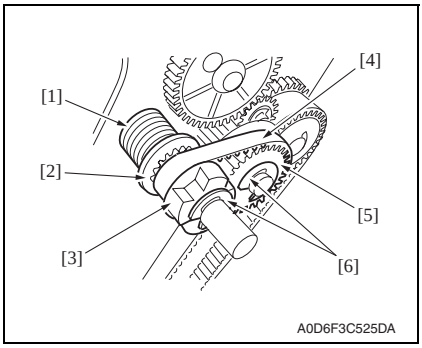

18. Remove the pin fixing the gear and the cam to release them.

19. Set the spring [1], the spacer [2], the staple jam release gear [3], the timing belt [4] and the middle gear 1 [5], and fix them with two E-rings [6].

6.4 Saddle gear phase adjustment

- Whenever the gear in front of the saddle or the folding roller has been replaced or removed for some reason, make gear phase adjustment following the procedures given below.

6.4.1 Adjustment procedure

1. Remove the saddle.
See P.14

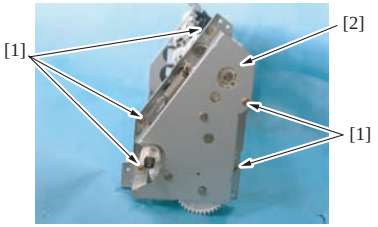

A0D6F3C526DA

2. Remove five screws [1], and remove the saddle gear cover [2].

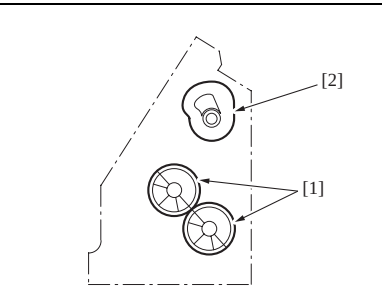

A0D6F3C527DA

3. Set the folding roller [1] and saddle cam [2] within the saddle as shown in the figure.
4. With the folding roller and the saddle cam positioned as shown in the left figure, set the gears as shown in the figure in the following way.

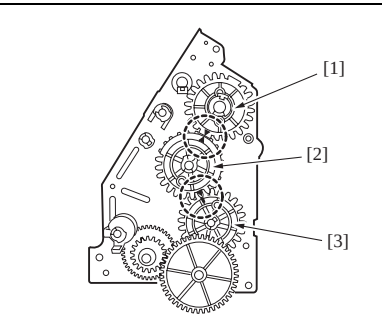

A0D6F3C528DA

NOTE

- **The mark on the saddle cam drive gear [1] (either of the two marks) comes face to face with the mark on the middle gear [2] (the mark on the semi spherical part with narrow gear face width).**

5. With the saddle cam drive gear [1] and the middle gear [2] positioned as above, the mark on the middle gear [2] (the mark on the other semi spherical part) meets face to face with the rib of the folding roller drive gear [3].

7. Board switch

7.1 FSCB (Finisher control board)

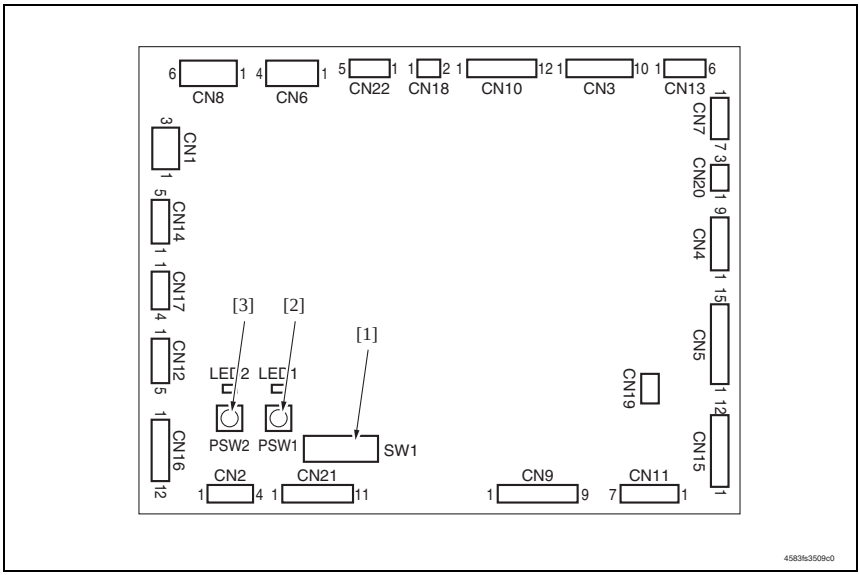

	Symbol	Description
[1]	SW1	Used to adjust the folding position, adjust the center 2-point stapling position and adjust the alignment plate position.
[2]	PSW1	Used to adjust the folding position, adjust the center 2-point stapling position and adjust the alignment plate position.
[3]	PSW2	Used to adjust the folding position, adjust the center 2-point stapling position and adjust the alignment plate position.

7.1.1 Adjustment of the folding positions

- When a folding position is adjusted, adjust the folding position to the stapling position. make this adjustment after replacing the finisher control board or when the folding position must be changed for some reason.

NOTE

- **Depending on the type of paper, both the folding position and the stapling position may be inaccurate. In this case, make adjustment independently from the finisher. In this independent adjustment from the finisher, set the adjustment value of [Center Staple pos] and [Half-Fold Pos.] in the service mode to ± 0 mm on the main body.**

1. Turn power switch OFF, and remove the finisher from the machine.
2. Remove the rear cover form the finisher.
See P.8

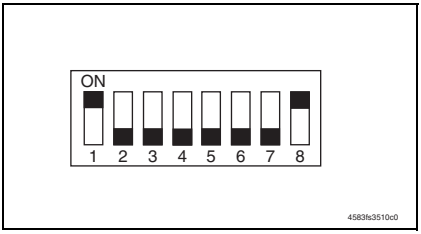

3. Set SW1 on the finisher control board as shown on the left figure.

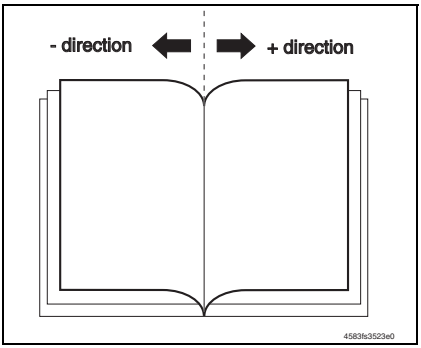

4. Press PSW1 or PSW2 on the finisher control board for the required times to adjust the folding position. One pressing of the switch moves the folding position by approx. 0.16 mm.
- Press PSW1 to move the folding position in the - direction.
- Press PSW2 to move the folding position in the + direction.
- Press PSW1 and PSW2 simultaneously to clear the present set adjustment value.

5. After setting the adjustment value of the folding position, set all bits of SW1 on the finisher control board to OFF.
6. Perform the booklet creation on the main body, and confirm that the folding position has been correctly adjusted. If not, redo the adjustment.

7.1.2 Adjustment of the center stapling position

- When a stapling position is adjusted, adjust the stapling position to the folding position. Make this adjustment after replacing the finisher control board or when the stapling position must be changed for some reason.

NOTE

- **Depending on the type of paper, both the folding position and the stapling position may be inaccurate. In this case, make adjustment independently from the finisher. In this independent adjustment from the finisher, set the adjustment value of [Center Staple pos] and [Half-Fold Pos.] in the service mode to ± 0mm on the main body.**

1. Turn power switch OFF, and remove the finisher from the machine.
2. Remove the rear cover form the finisher.
See P.8

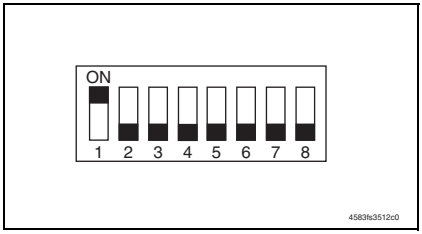

3. Set SW1 on the finisher control board as shown on the left figure.

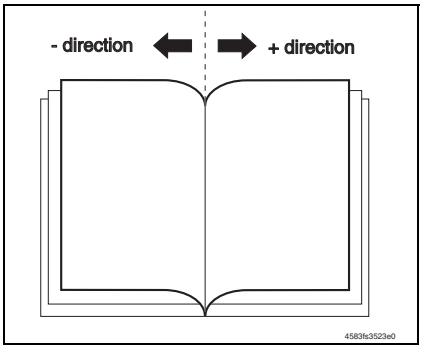

4. Press PSW1 or PSW2 on the finisher control board for the required times to adjust the stapling position. One pressing of the switch moves the stapling position by approx. 0.14 mm.
   - Press PSW1 to move the stapling position in the - direction.
   - Press PSW2 to move the stapling position in the + direction.
   - Press PSW1 and PSW2 simultaneously to clear the present set adjustment value.
5. After setting the adjustment value of the stapling position, set all bits of SW1 on the finisher control board to OFF.
6. Perform the booklet creation on the main body, and confirm that the stapling position has been correctly adjusted. If not, redo the adjustment.

7.1.3 Adjustment of the alignment plate position

- Alignment plate should be adjusted when there is a faulty alignment, the staple position deviates.

A. Alignment procedure

NOTE

- **If a step or steps are wrongly performed in mid procedure, stop the procedure immediately. Then turn OFF the power switch of the main body, wait for 10 sec. or more, and turn ON the power switch. After performing these steps, start the procedure over.**

1. Turn power switch OFF, and remove the finisher from the machine.
2. Remove the rear cover form the finisher.
See P.8

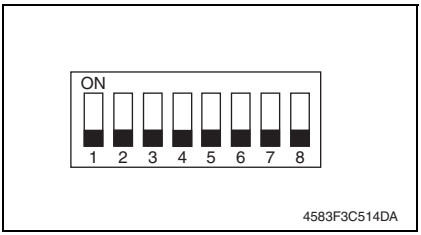

3. Check to make sure that all SW1 on the finisher controller board are set to OFF.

NOTE

- **When not all of them are OFF, write down the switch status and turn them OFF.**

4. With the rear cover of the finisher removed, install the finisher to the machine, and turn power switch ON.

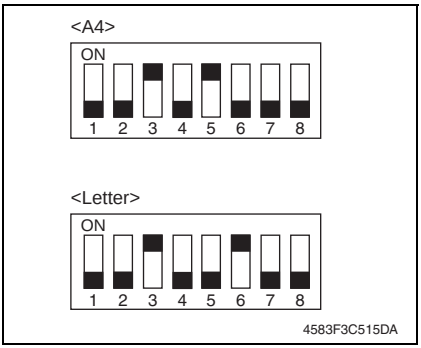

5. When the initial operation of the finisher is complete, turn on the following switches of SW1.
When adjusting with A4: 3, 5
When adjusting with Letter: 3, 6

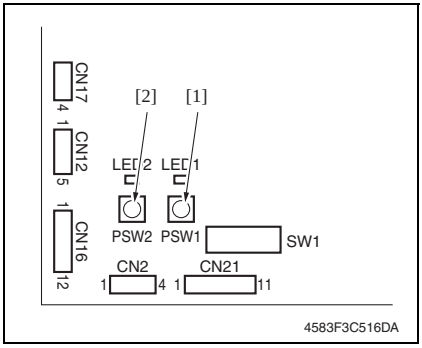

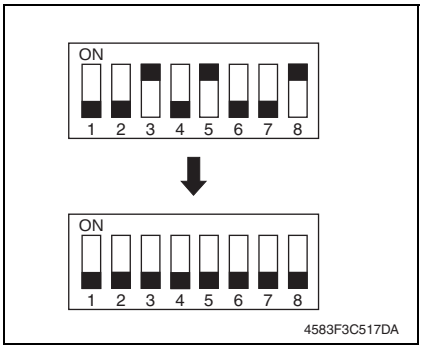

11. Return the finisher to the original status.

6. After the initial operation of the finisher, press the PSW1 [1] on the finisher control board and make sure that the alignment plate moves to the selected paper size area.

7. Adjust the alignment plate position with PSW1 [1] or PSW2 [2].
When adjusting inward: Press PSW1.
When adjusting outward: Press PSW2.

The alignment plate will move 0.367mm every time the push switch is pressed.
Alignment range is ± 2.936 mm.

8. When the adjustment is complete, turn switch 8 of SW1 ON to set the adjustment value.

9. Turn all adjustment switches OFF.

10. Turn power switch OFF.

NOTE

- **When not all SW1 are OFF in step 3, return to the original condition according to the written note.**

7.2 PKCB (Punch control board)

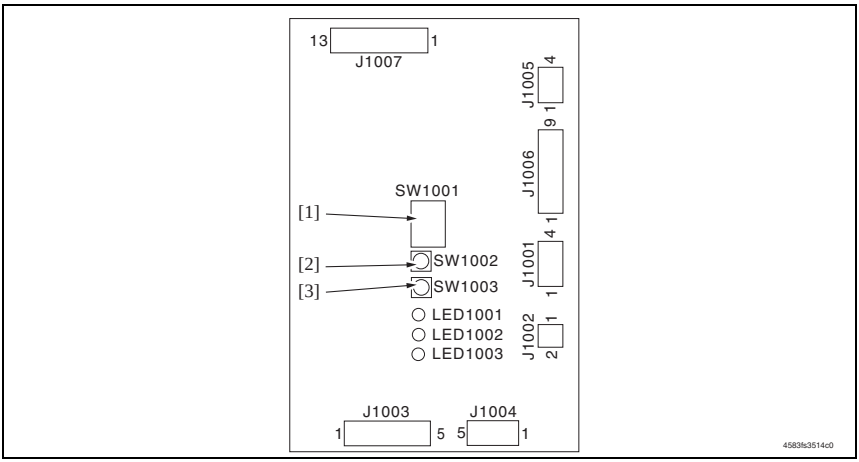

	Symbol	Description
1	SW1001	Used to register the number of punched holes and adjust the sensor output.
2	SW1002	Used to register the number of punched holes and adjust the sensor output.
3	SW1003	Used to register the number of punched holes and adjust the sensor output.

7.2.1 Adjustment of the sensor output

- Be sure to make this adjustment after replacing the punch control board, the side registration sensor (Photosensor board or LED board) or the punch dust full sensor (punch dust full sensor board or punch dust full LED board).

1. Turn power switch OFF, and remove the finisher from the machine.
2. Remove the rear cover form the finisher.
See P.8

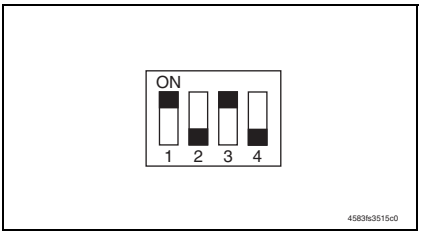

3. Set the bits 1 through 4 of DIPSW1001 on the punch control board as shown on the left figure.
4. Press SW1002 or SW1003 on the punch control board. The sensor output will be automatically adjusted.
- When all LED1001, LED1002 and LED1003 light up, the adjustment has been completed.

5. Set all bits of DIPSW1001 to OFF.

7.2.2 Registration of the number of punch holes

- In order for the finisher to recognize the number of punch holes that can be achieved by the installed punch unit, such number of punch holes is registered in the IC on the punch control board. Make this registration whenever the punch control board has been replaced.
- However, this registration is not necessary if the EEP-ROM used on an old board has been reinstalled to a new board.

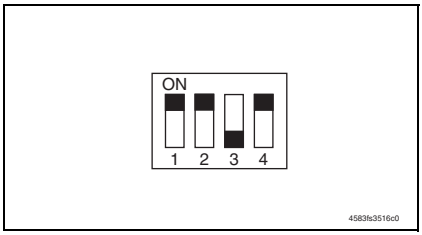

1. Set the bits 1 through 4 of DIPSW1001 on the punch control board as shown on the left figure.

2. Press SW1002 on the punch control board to select the number of punch holes.
- Each time SW1002 is pressed, the following display changes in the descending order shown below:

Number of punch holes	LED 1001	LED 1002	LED 1003
2 (Punch unit J1)	ON	OFF	OFF
2/3 (Punch unit K1)	ON	ON	OFF
4 (Punch unit G1)	OFF	ON	OFF
4 (Punch unit H1)	OFF	OFF	ON

3. Press SW1003 on the punch control board twice. The number of punch holes will be registered in the punch control board.
- The pressing of SW1003 changes the steady lighting of the LED to flickering, and the pressing of SW1003 again changes the flickering of the LED to steady lighting. This completes the registration.

4. Set all bits of DIPSW1001 to OFF.

7.2.3 Procedure after replacing the EEP-ROM (IC1002)

1. Turn OFF the power switch of the main body.

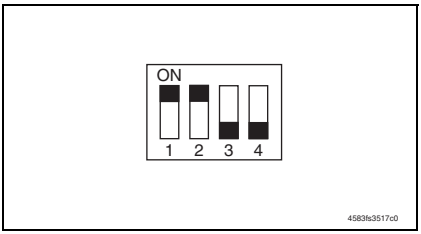

2. Set the bits 1 through 4 of DIPSW1001 on the punch control board as shown on the left figure.
3. Press SW1002 and SW1003 on the punch control board simultaneously.

- This will initialize the EEP-ROM. After the initialization, all LED1001, LED1002 and LED1003 light up.

4. Adjust the sensor output, and register the number of punch holes.
5. Set all bits of DIP SW 1001 to OFF.

7.2.4 Punch center position adjustment

- This adjustment is made when the punch lateral movement is changed from the lateral registration motion (automatic through end face detection) to fixed system based on the paper size.

1. Turn power switch OFF, and remove the finisher from the machine.
2. Remove the rear cover form the finisher.
See P.8

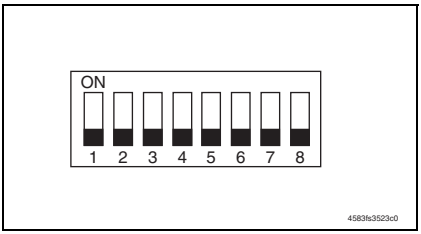

3. Check that all keys of SW1 of the finisher control board are OFF.
4. Turn ON the power switch of the main body and wait until the finisher completes its initial operation.

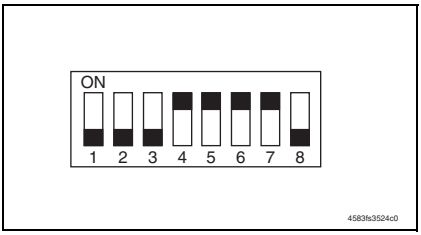

- Use the following procedure to clear the adjustment of the punch lateral movement.

5. Turn ON keys 4, 5, 6, and 7 of SW1 of the finisher control board.

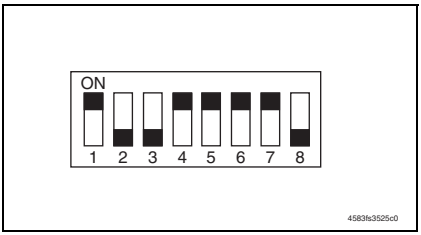

6. Turn ON key 1 of SW1 of the finisher control board.
7. Press PSW1 and PSW2 of the finisher control board at the same time.

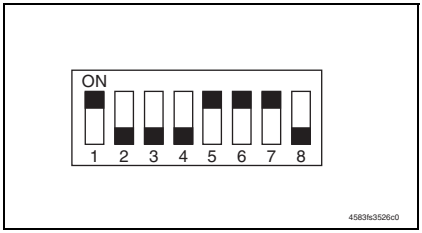

8. Turn OFF key 4 of SW1 of the finisher control board.
9. Wait until the machine becomes capable of paper feed.

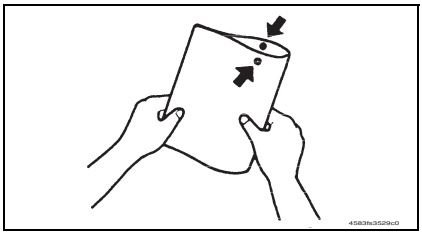

10. Feed one sheet of paper through the machine. Fold the print fed out of the machine in half and check that the punch holes are aligned with each other.
Specifications:0 ± 2 mm
- If the specified range is not met, use the following procedure to adjust the punch center position.

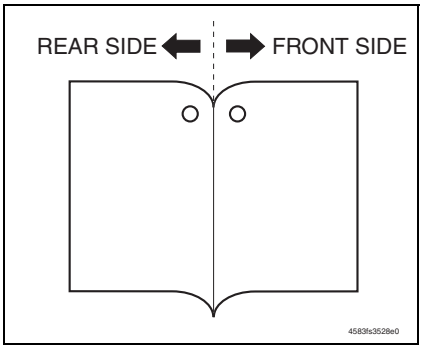

11. Press PSW1 or PSW2 of the finisher control board once according to the direction of deviation.
- Pressing PSW1 moves the punch position to the front.
- Pressing PSW2 moves the punch position to the rear.
- Each press of PSW1 or PSW2 moves the position 1 mm. The adjustment range should be within ± 5 mm.

12. Feed another sheet of paper. If the punch hole position is not properly adjusted, make the adjustment once again.

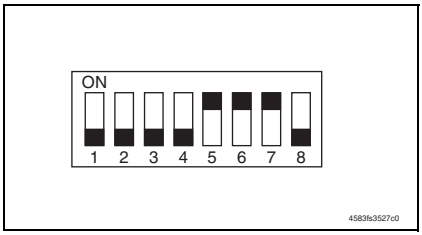

- When the adjustment procedure has been completed, use the following procedure to finish the adjustment mode.

13. Turn OFF key 1 of SW1 of the finisher control board.

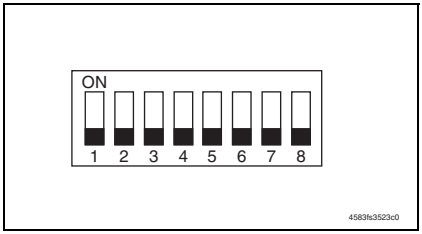

14. Turn OFF keys 5, 6, and 7 of SW1 of the finisher control board.
15. Turn OFF the power switch of the main body.

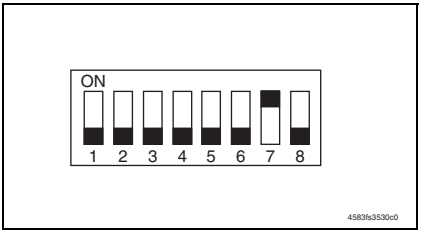

16. Turn ON key 7 of SW1 of the finisher control board.

NOTE

- **Flipping ON key 7 of SW1 validates the setting made to the fixed system based on the paper size as changed from the lateral registration motion (automatic through end face detection).**
- **To return the setting back to the lateral registration motion, flip OFF key 7 of SW1.**

17. Turn ON the power switch of the main body.

18. Reinstall the rear cover.

See P.8

NOTE

- **The procedure must be carried out as specified. In particular, switching ON or OFF must be performed properly.**
- **If a step or steps are wrongly performed in mid procedure, stop the procedure immediately. Then turn OFF the power switch of the main body, wait for 10 sec. or more, and turn ON the power switch. After performing these steps, start the procedure over.**
- **This adjustment is applicable only to the punch position center adjustment. The adjustment range is ± 5 mm. It does not adjust for variations in the punch hole positions.**

Troubleshooting

8. Jam display

8.1 Misfeed display

- When a paper misfeed occurs, the LED line lights up red steadily and the misfeed message is displayed on the control panel of the machine.

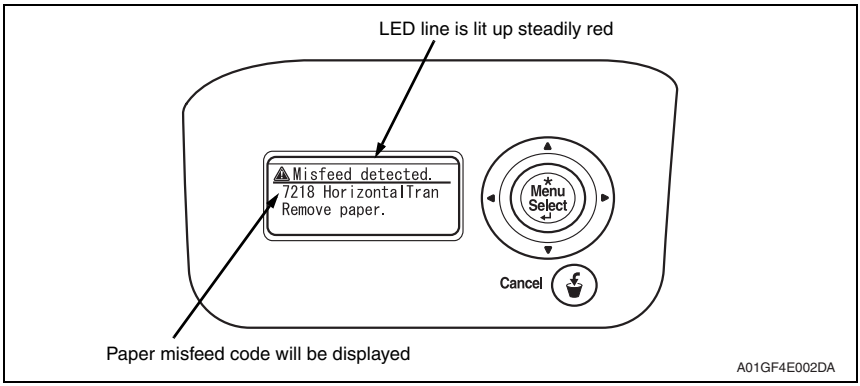

No.	Code	Misfeed location	Misfeed access location	Action
[1]	7218	Transport section	Front door	P.66
[2]	7216	Horizontal transport section	Horizontal transport cover	P.66
[3]	7225	Folding position section	Front door	P.67
[4]	7281	Stapler section	Front door	P.67
[5]	7221	Paper stack exit section	Front door	P.68

8.1.1 Misfeed display resetting procedure

- Open the corresponding door, clear the sheet of paper misfeed, and close the door.

8.2 Sensor layout

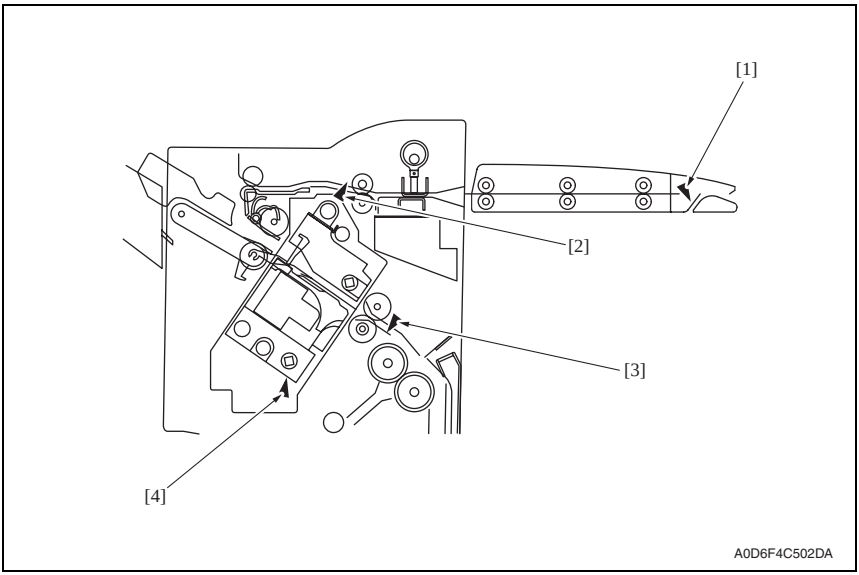

[1]	Turnover empty sensor	PS27	[3]	Folding position sensor	PS10
[2]	Entrance sensor	PS1	[4]	Stapler drive home position sensor	PS19

8.3 Solution

8.3.1 Initial check items

- When a paper misfeed occurs, first perform the following initial check items.

Check Item	Action
Does the paper meet product specifications?	Change the paper.
Is paper curled, wavy, or damp?	See "Solution when paper curl occurs" on P.65.
Is a foreign object present along the paper path, or is the paper path deformed or worn?	Clean or change the paper path.
Are the rolls/rollers dirty, deformed, or worn?	Clean or change the defective roll/roller.
Are the edge guide and trailing edge stop at the correct position to accommodate the paper?	Set as necessary.
Are the actuators found operational when checked for correct operation?	Correct or change the defective actuator.

8.3.2 Solution when paper curl occurs

Step	Check items/actions		
1	Turn over the stacked paper in the paper tray.	OK	—
		NG	Go to step 2.
2	Does paper curl occur just after a warm-up has been completed or the sleep mode has been turned OFF?	YES	Go to step 3.
	Does paper curl occur under normal conditions (under conditions other than those mentioned above)?	YES	Go to step 5.
3	*1.* Call the Service Mode to the screen. *2.* Select [System 1] → [Change Warm Up Time]. *3.* Change the setting to [Mode3]. See P.344 of the main body service manual.	OK	—
		NG	Go to step 4.
4	*1.* Call the Service Mode to the screen. *2.* Select [System 1] → [Change Warm Up Time]. *3.* Change the setting to [Mode4]. See P.344 of the main body service manual.	—	—
5	*1.* Call the Service Mode to the screen. *2.* Select [Machine] → [Fusing Temperature]. *3.* Select a paper type. *4.* Change the temperature of Heater Roller to [-10 °C]. See P.305 of the main body service manual.	OK	—
		NG	Go to step 6
6	*1.* Call the Service Mode to the screen. *2.* Select [Machine] → [Fusing Temperature]. *3.* Select a paper type. *4.* Change the temperature of Heater Roller to [-20 °C]. See P.305 of the main body service manual.	—	—

8.3.3 Transport section misfeed

A. Detection timing

Type	Description
Transport section misfeed detection	The entrance sensor (PS1) does not detect paper even after the lapse of approx. 1.5 sec. after the entrance sensor (PS1) has received the paper exit signal from the main body.
	Paper is not removed from the entrance sensor (PS1) even after the lapse of approx. 2 sec. after the entrance sensor (PS1) has detected paper edge.

B. Action

Relevant electrical parts	
Entrance sensor (PS1)	Finisher control board (FSCB)

Step	Action	WIRING DIAGRAM	
		Control signal	Location (Electrical components)
1	Initial check items	—	—
2	PS1 I/O, sensor check	FSCB CN16FSCB-11 (ON)	FS-609/PK-501 C-11
3	FSCB replacement	—	—

8.3.4 Horizontal transport section misfeed

A. Detection timing

Type	Description
Horizontal transport section misfeed detection	The turnover empty sensor (PS27) is not unblocked even after the lapse of a given period of time after the leading edge of the paper has blocked the turnover empty sensor (PS27).

B. Action

Relevant electrical parts	
Turnover empty sensor (PS27)	Finisher control board (FSCB)

Step	Action	WIRING DIAGRAM	
		Control signal	Location (Electrical components)
1	Initial check items	—	—
2	PS27 I/O, sensor check	FSCB CN21FSCB-5 (ON)	FS-609/PK-501 I-10
3	FSCB replacement	—	—

8.3.5 Folding position section misfeed

A. Detection timing

Type	Description
Folding position section misfeed detection	The folding position sensor (PS10) does not detect paper even after the set period of time after the paper has been fed from the transport booklet tray to the stapling position during stapling operation.
	Paper is not removed from the folding position sensor (PS10) even after the lapse of approx. 10.5 sec. after the staple/folding motor (M7) has been driven during stapling operation.

B. Action

Relevant electrical parts	
Folding position sensor (PS10)	Finisher control board (FSCB)

Step	Action	WIRING DIAGRAM	
		Control signal	Location (Electrical components)
1	Initial check items	—	—
2	PS10 I/O, sensor check	FSCB CN16FSCB-2 (ON)	FS-609/PK-501 C-12
3	FSCB replacement	—	—

8.3.6 Stapler section misfeed

A. Detection timing

Type	Description
Stapler section misfeed detection	The stapler drive home position sensor (PS19) is not turned OFF or does not return to its home position even after the set period of time after the stapler has been driven.

B. Action

Relevant electrical parts	
Stapler drive home position sensor (PS19)	Finisher control board (FSCB)

Step	Action	WIRING DIAGRAM	
		Control signal	Location (Electrical components)
1	Initial check items	—	—
2	PS19 I/O, sensor check	—	—
3	FSCB replacement	—	—

8.3.7 Paper stack exit section misfeed

A. Detection timing

Type	Description
Paper stack exit section misfeed detection	The finisher tray sensor (PS6) remains activated when a copy stack, which has been stapled together, is fed out.

B. Action

Relevant electrical parts	
Exit motor (M3) Finisher tray sensor (PS6)	Finisher control board (FSCB)

Step	Action	WIRING DIAGRAM	
		Control signal	Location (Electrical components)
1	Initial check items	—	—
2	PS6 I/O, sensor check	FSCB CN5FSCB-3 (ON)	FS-609/PK-501 I-7
3	M3 operation check	FSCB CN13FSCB-3 to 6	FS-609/PK-501 C-6
4	FSCB replacement	—	—

9. Trouble code

9.1 Trouble code display

NOTE

- **Before starting the troubleshooting in relation to the punch mechanism C11CX, be sure to turn OFF the power switch of the machine.**

9.2 Trouble code list

Code	Item	Description
C1180	Transport system drive malfunctions	• The folding roller home position sensor (PS12) is not unblocked even after the lapse of a given period of time after the folding roller has started moving from its home position. • The folding roller home position sensor (PS12) is not blocked even after the lapse of a given period of time after the folding roller has started moving from a position not the home position.
C1181	Paddle motor malfunctions	• The paddle home position sensor (PS2) is not unblocked even after the lapse of a given period of time after the paddle has started moving from its home position. • The paddle home position sensor (PS2) is not blocked even after the lapse of a given period of time after the paddle has started moving from a position not the home position. • The bundle exit roller home position sensor (PS3) is not unblocked even after the lapse of a given period of time after the booklet roller has started moving from its home position. • The bundle exit roller home position sensor (PS3) is not blocked even after the lapse of a given period of time after the booklet roller has started moving from a position not the home position.
C1183	Elevate mechanism malfunctions	• The exit tray home position sensor (PS9) is not blocked even after the lapse of a given period of time after the tray has started moving up. • An encoder clock input is not detected within a given period of time during operation of the tray.
C1192	Front aligning plate motor malfunctions	• The front aligning plate home position sensor (PS4) is not unblocked even after the lapse of a given period of time after the front aligning plate has started moving from its home position to a position out of the home position. • The front aligning plate home position sensor (PS4) is not blocked even after the lapse of a given period of time after the front aligning plate has started moving from a position out of the home position to the home position.
C1193	Rear aligning plate motor malfunctions	• The rear aligning plate home position sensor (PS5) is not unblocked even after the lapse of a given period of time after the rear aligning plate has started moving from its home position to a position out of the home position. • The rear aligning plate home position sensor (PS5) is not blocked even after the lapse of a given period of time after the rear aligning plate has started moving from a position out of the home position to the home position.

Code	Item	Description
C11A4	Booklet exit motor malfunctions	• The exit belt home position sensor (PS7) is not unblocked even after the lapse of a given period of time after the booklet exit belt has started moving from its home position during an initial operation. • The exit belt home position sensor (PS7) is not unblocked even after the lapse of a given period of time after the booklet exit belt has started moving from its home position during an ordinary operation. • The exit belt home position sensor (PS7) is not blocked even after the lapse of a given period of time after the booklet exit belt has started moving from a position not the home position during an initial operation. • The exit belt home position sensor (PS7) is not blocked even after the lapse of a given period of time after the booklet exit belt has started moving from a position not the home position during an ordinary operation.
C11B1	Stapler unit slide motor malfunctions	• The slide home position sensor (PS18) is not unblocked even after the lapse of a given period of time after the stapler unit has started moving from its home position. • The slide home position sensor (PS18) is not blocked even after the lapse of a given period of time after the stapler unit has started moving from a position not the home position.
C11B4	Stapler/folding motor malfunctions	• The stapler drive home position sensor (PS19) is not blocked even after the lapse of a given period of time after the clinch operation has started. • An encoder clock input is not detected within a given period of time during a clinch operation. • The folding home position sensor (PS11) is not blocked even after the lapse of a given period of time after the folding unit has started moving from a position out of the home position during an initial operation. • The folding home position sensor (PS11) is not unblocked even after the lapse of a given period of time after a folding operation has been started during an ordinary operation. • The folding home position sensor (PS11) is not blocked even after the lapse of a given period of time after a folding operation has been started and the sensor has been unblocked during an ordinary operation. • An encoder clock input is not detected within a given period of time during a folding operation.
C11C1	Punch control board malfunctions	• No response is received to a request made by the finisher within a given period of time during initial communications. • No response is received to a request made by the finisher within a given period of time during ordinary communications. • There is no match in the checksum values of the backup data as checked twice. • The 24 V power source of the punch unit is OFF when an operation request is made from the finisher.
C11C2	Punch side registration motor malfunctions	• The side registration home sensor (PS2) is not unblocked even after the lapse of a given period of time after the punch side registration unit has started moving from its home position. • The side registration home sensor (PS2) is not blocked even after the lapse of a given period of time after the punch side registration unit has started moving from a position not the home position.

Code	Item	Description
C11C3	Punch motor malfunctions	• The home position is not detected within a given period of time after the punch motor has been rotated a half turn. • An encoder clock input is not detected even after the lapse of a given period of time during operation of the punch motor. • The setting value calculated during the initial operation falls outside the threshold value range.
C11C5	Punch sensor malfunctions	• The light receiving voltage is 2.5 V or less when the illuminating voltage is set to 4.4 V. • The light receiving voltage is 2.5 V or more when the illuminating voltage is set to 0 V. • The illuminating voltage setting is 4.4 V or more after the adjustment has been made.
C1401	Backup RAM malfunction	• Data written in the backup memory differs from what is recorded in it and writing operation is not correctly performed even with two retry sequences (a total of three writing sequences).

NOTE

- **The punch unit detects punch-related malfunctions and notifies the finisher of any malfunction detected.**

9.3 Solution

9.3.1 C1180: Transport system drive malfunctions

Relevant electrical parts	
Folding roller home position sensor (PS12) Transport motor (M1)	Finisher control board (FSCB)

Step	Action	WIRING DIAGRAM	
		Control signal	Location (Electrical components)
1	Check the motor connectors for proper connection, and correct as necessary.	—	—
2	Check the connector of motor for proper drive coupling, and correct as necessary.	—	—
3	PS12 I/O, sensor check	FSCB CN16FSCB-9 (ON)	FS-609/PK-501 C-11
4	M1 operation check when the power switch is turned OFF and ON.	FSCB CN10FSCB-3 to 6	FS-609/PK-501 C-8 to 9
5	FSCB replacement	—	—

9.3.2 C1181: Paddle motor malfunctions

Relevant electrical parts	
Paddle home position sensor (PS2) Bundle exit roller home position sensor (PS3) Paddle motor (M2)	Finisher control board (FSCB)

Step	Action	WIRING DIAGRAM	
		Control signal	Location (Electrical components)
1	Check the motor and sensor connectors for proper connection, and correct as necessary.	—	—
2	Check the connector of motor for proper drive coupling, and correct as necessary.	—	—
3	PS2 I/O, sensor check	FSCB CN9FSCB-2 (ON)	FS-609/PK-501 I-12
4	PS3 I/O, sensor check	FSCB CN9FSCB-8 (ON)	FS-609/PK-501 I-12
5	M2 operation check when the power switch is turned OFF and ON.	FSCB CN10FSCB-9 to 12	FS-609/PK-501 C-9
6	FSCB replacement	—	—

9.3.3 C1183: Elevate mechanism malfunctions

(1) Upper limit sensor

Relevant electrical parts	
Lift upper limit sensor (PS15)	Finisher control board (FSCB)

Step	Action	WIRING DIAGRAM	
		Control signal	Location (Electrical components)
1	Check the sensor connectors for proper connection, and correct as necessary.	—	—
2	PS15 I/O, sensor check	FSCB CN15FSCB-12 (ON)	FS-609/PK-501 I-7
3	FSCB replacement	—	—

9.3.4 C1192: Front aligning plate motor malfunctions

Relevant electrical parts	
Front aligning plate home position sensor (PS4) Front aligning motor (M4)	Finisher control board (FSCB)

Step	Action	WIRING DIAGRAM	
		Control signal	Location (Electrical components)
1	Check the motor and sensor connectors for proper connection, and correct as necessary.	—	—
2	Check the connector of motor for proper drive coupling, and correct as necessary.	—	—
3	PS4 I/O, sensor check	FSCB CN4FSCB-2 (ON)	FS-609/PK-501 I-8 to 9
4	M4 operation check when the power switch is turned OFF and ON.	FSCB CN3FSCB-2 to 5	FS-609/PK-501 C-5
5	FSCB replacement	—	—

9.3.5 C1193: Rear aligning plate motor malfunctions

Relevant electrical parts	
Rear aligning plate home position sensor (PS5) Rear aligning motor (M5)	Finisher control board (FSCB)

Step	Action	WIRING DIAGRAM	
		Control signal	Location (Electrical components)
1	Check the motor and sensor connectors for proper connection, and correct as necessary.	—	—
2	Check the connector of motor for proper drive coupling, and correct as necessary.	—	—
3	PS5 I/O, sensor check	FSCB CN5FSCB-15 (ON)	FS-609/PK-501 I-8
4	M5 operation check when the power switch is turned OFF and ON.	FSCB CN3FSCB-7 to 10	FS-609/PK-501 C-5 to 6
5	FSCB replacement	—	—

9.3.6 C11A4: Booklet exit motor malfunctions

Relevant electrical parts	
Exit belt home position sensor (PS7) Exit motor (M3)	Finisher control board (FSCB)

Step	Action	WIRING DIAGRAM	
		Control signal	Location (Electrical components)
1	Check the motor and sensor connectors for proper connection, and correct as necessary.	—	—
2	Check the connector of motor for proper drive coupling, and correct as necessary.	—	—
3	PS7 I/O, sensor check	FSCB CN5FSCB-6 (ON)	FS-609/PK-501 I-7
4	M3 operation check when the power switch is turned OFF and ON.	FSCB CN13FSCB-3 to 6	FS-609/PK-501 C-6
5	FSCB replacement	—	—

9.3.7 C11B1: Stapler unit slide motor malfunctions

Relevant electrical parts	
Slide home position sensor (PS18) Slide motor (M8)	Finisher control board (FSCB)

Step	Action	WIRING DIAGRAM	
		Control signal	Location (Electrical components)
1	Check the motor and sensor connectors for proper connection, and correct as necessary.	—	—
2	Check the connector of motor for proper drive coupling, and correct as necessary.	—	—
3	PS18 I/O, sensor check	FSCB CN11FSCB-3	FS-609/PK-501 C to D-7
4	M8 operation check when the power switch is turned OFF and ON.	FSCB CN7FSCB-3 to 6	FS-609/PK-501 C-6 to 7
5	FSCB replacement	—	—

9.3.8 C11B4: Stapler/folding motor malfunctions

(1) Wiring

Relevant electrical parts	
Stapler drive home position sensor (PS19) staple/folding motor (M7)	Finisher control board (FSCB)

Step	Action	WIRING DIAGRAM	
		Control signal	Location (Electrical components)
1	Check the motor connectors for proper connection, and correct as necessary.	—	—
2	Check the connector of motor for proper drive coupling, and correct as necessary.	—	—
3	PS19 I/O, sensor check	—	—
4	M7 operation check when the power switch is turned OFF and ON.	FSCB CN6FSCB-3 to 4	FS-609/PK-501 C-4
5	FSCB replacement	—	—

(2) Stapler/crease clock sensor (Stapler Section)

Relevant electrical parts	
Staple/folding motor clock sensor (PS14) Staple/folding motor (M7)	Finisher control board (FSCB)

Step	Action	WIRING DIAGRAM	
		Control signal	Location (Electrical components)
1	Check the motor and sensor connectors for proper connection, and correct as necessary.	—	—
2	Check the connector of motor for proper drive coupling, and correct as necessary.	—	—
3	PS14 I/O, sensor check	FSCB CN9FSCB-5 (ON)	FS-609/PK-501 I-12
4	M7 operation check when the power switch is turned OFF and ON.	FSCB CN6FSCB-3 to 4	FS-609/PK-501 C-4
5	FSCB replacement	—	—

(3) Home position sensor

Relevant electrical parts	
Folding home position sensor (PS11) Staple/folding motor (M7)	Finisher control board (FSCB)

Step	Action	WIRING DIAGRAM	
		Control signal	Location (Electrical components)
1	Check the motor and sensor connectors for proper connection, and correct as necessary.	—	—
2	Check the connector of motor for proper drive coupling, and correct as necessary.	—	—
3	PS11 I/O, sensor check	FSCB CN16FSCB-6 (ON)	FS-609/PK-501 C-11
4	M7 operation check when the power switch is turned OFF and ON.	FSCB CN6FSCB-3 to 4	FS-609/PK-501 C-4
5	FSCB replacement	—	—

(4) Stapler/crease clock sensor (Saddle Section)

Relevant electrical parts	
Staple/folding motor clock sensor (PS14) Staple/folding motor (M7)	Finisher control board (FSCB)

Step	Action	WIRING DIAGRAM	
		Control signal	Location (Electrical components)
1	Check the motor and sensor connectors for proper connection, and correct as necessary.	—	—
2	Check the connector of motor for proper drive coupling, and correct as necessary.	—	—
3	PS14 I/O, sensor check	FSCB CN9FSCB-5 (ON)	FS-609/PK-501 I-12
4	M7 operation check when the power switch is turned OFF and ON.	FSCB CN6FSCB-3 to 4	FS-609/PK-501 C-4
5	FSCB replacement	—	—

9.3.9 C11C1: Punch control board malfunctions

Relevant electrical parts	
Finisher control board (FSCB) Punch control board (PKCB)	

Step	Action	WIRING DIAGRAM	
		Control signal	Location (Electrical components)
1	Turn OFF the power switch, wait for 10 sec. or more, and turn ON the power switch.	—	—
2	Check the connection condition between the punch unit and FSCB.	—	—
3	Measure the voltage between CN14-5 (+) and CN14-3 (-) of the FSCB. Is the voltage 24VDC?	—	—
4	Initialize punch unit EEP-ROM.	—	—
5	PKCB replacement	—	—
6	FSCB replacement	—	—

9.3.10 C11C2: Punch side registration motor malfunctions

Relevant electrical parts	
Side registration home sensor (PS2)	Punch control board (PKCB)

Step	Action	WIRING DIAGRAM	
		Control signal	Location (Electrical components)
1	Check the sensor connectors for proper connection, and correct as necessary.	—	—
2	PS2 I/O, sensor check	PKCB J1006PKCB-3 (ON)	FS-609/PK-501 J-3
3	PKCB replacement	—	—

9.3.11 C11C3: Punch motor malfunctions

Relevant electrical parts	
Punch home position sensor (PS1) Punch motor clock sensor (PS3) Punch motor (M1)	Punch control board (PKCB)

Step	Action	WIRING DIAGRAM	
		Control signal	Location (Electrical components)
1	Check the motor and sensor connectors for proper connection, and correct as necessary.	—	—
2	Check the connector of motor for proper drive coupling, and correct as necessary.	—	—
3	PS1 I/O, sensor check	PKCB J1006PKCB-6 (ON)	FS-609/PK-501 J-3
4	PS3 I/O, sensor check	PKCB J1006PKCB-9 (ON)	FS-609/PK-501 J-3 to 4
5	M1 operation check when the power switch is turned OFF and ON.	PKCB J1002PKCB-1 to 2	FS-609/PK-501 J-2
6	PKCB replacement	—	—

9.3.12 C11C5: Punch sensor malfunctions

(1) Side registration sensor

Relevant electrical parts	
Side registration home sensor (PS2)	Punch control board (PKCB)

Step	Action	WIRING DIAGRAM	
		Control signal	Location (Electrical components)
1	Check the sensor connectors for proper connection, and correct as necessary.	—	—
2	PS2 I/O, sensor check	PKCB J1006PKCB-3 (ON)	FS-609/PK-501 J-3
3	PKCB replacement	—	—

(2) Wastes full sensor

Relevant electrical parts	
Punch Trash Full Photo Sensor Board (PTFB/PR) Punch Trash Full LED Board (PTFB/LED)	Punch control board (PKCB)

Step	Action	WIRING DIAGRAM	
		Control signal	Location (Electrical components)
1	Check the connection condition between PKCB and PTFB/PR.	—	—
2	Check the connection condition between PWB-B PK and PTFB/LED.	—	—
3	PTFB/PR replacement	—	—
4	PTFB/LED replacement	—	—
5	PKCB replacement	—	—

(3) Finisher control board

Relevant electrical parts	
Exit tray home position sensor (PS9) Lift motor clock sensor (PS17) Lift motor (M6)	Finisher control board (FSCB)

Step	Action	WIRING DIAGRAM	
		Control signal	Location (Electrical components)
1	Check the motor and sensor connectors for proper connection, and correct as necessary.	—	—
2	Check the connector of motor for proper drive coupling, and correct as necessary.	—	—
3	PS9 I/O sensor check	FSCB CN5FSCB-12 (ON)	FS-609/PK-501 I-8
4	PS17 I/O sensor check	FSCB CN15FSCB-6 (ON)	FS-609/PK-501 I-6
5	M6 operation check when the power switch is turned OFF and ON.	FSCB CN6FSCB-1 to 2	FS-609/PK-501 C-4
6	FSCB replacement	—	—

9.3.13 C1401: Backup RAM malfunction

Relevant electrical parts	
Finisher control board (FSCB)	

Step	Action	WIRING DIAGRAM	
		Control signal	Location (Electrical components)
1	Disconnect and then connect the power cord. Turn OFF the power switch, wait for 10 sec. or more, and turn ON the power switch.	—	—
2	Check the connectors for proper connection on the FSCB.	—	—
3	FSCB replacement	—	—

bizhub C353P Overall wiring diagram

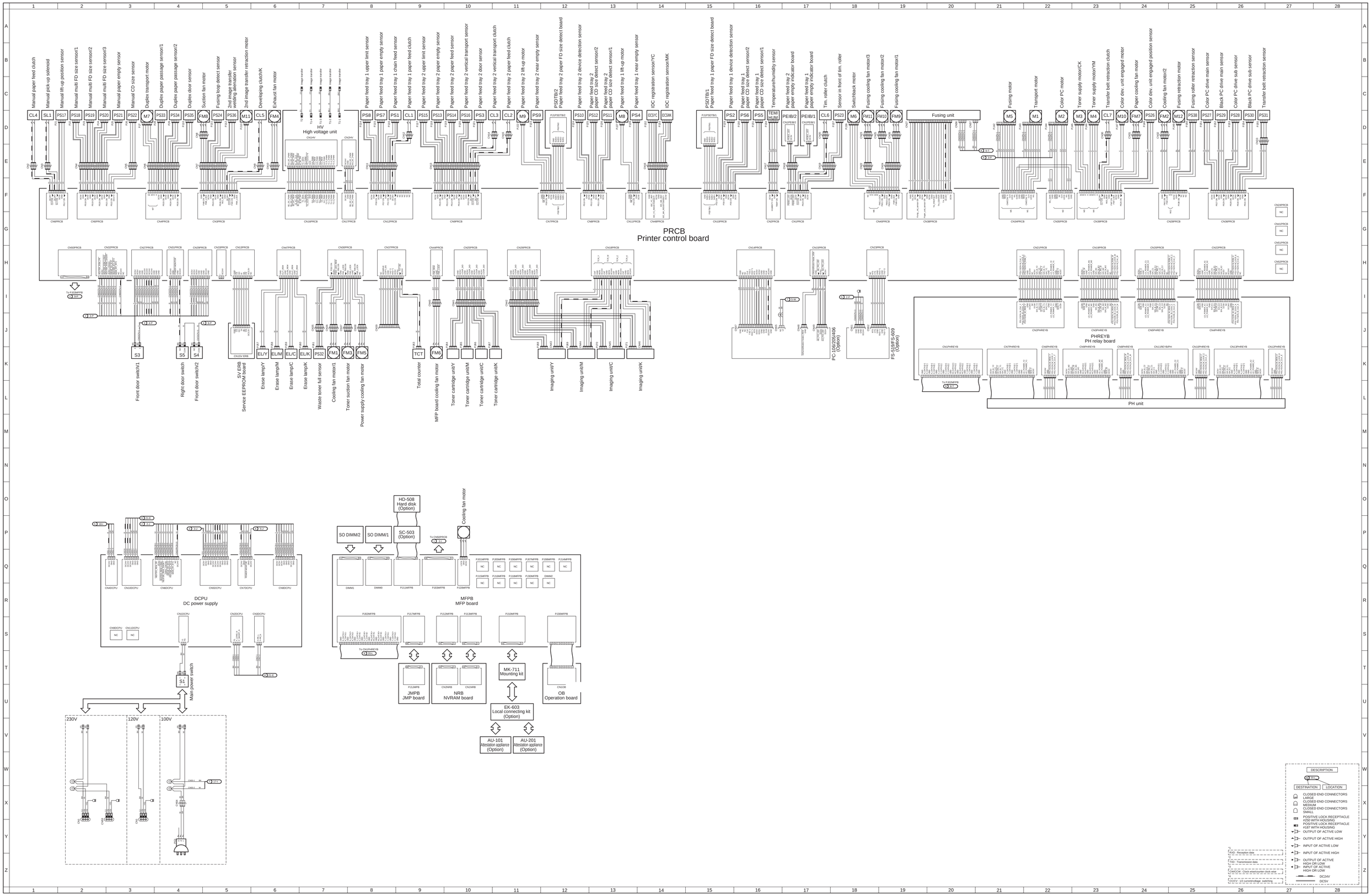

Confidential – for internal use only, do not distribute

bizhub C353P Overall wiring diagram 1/4

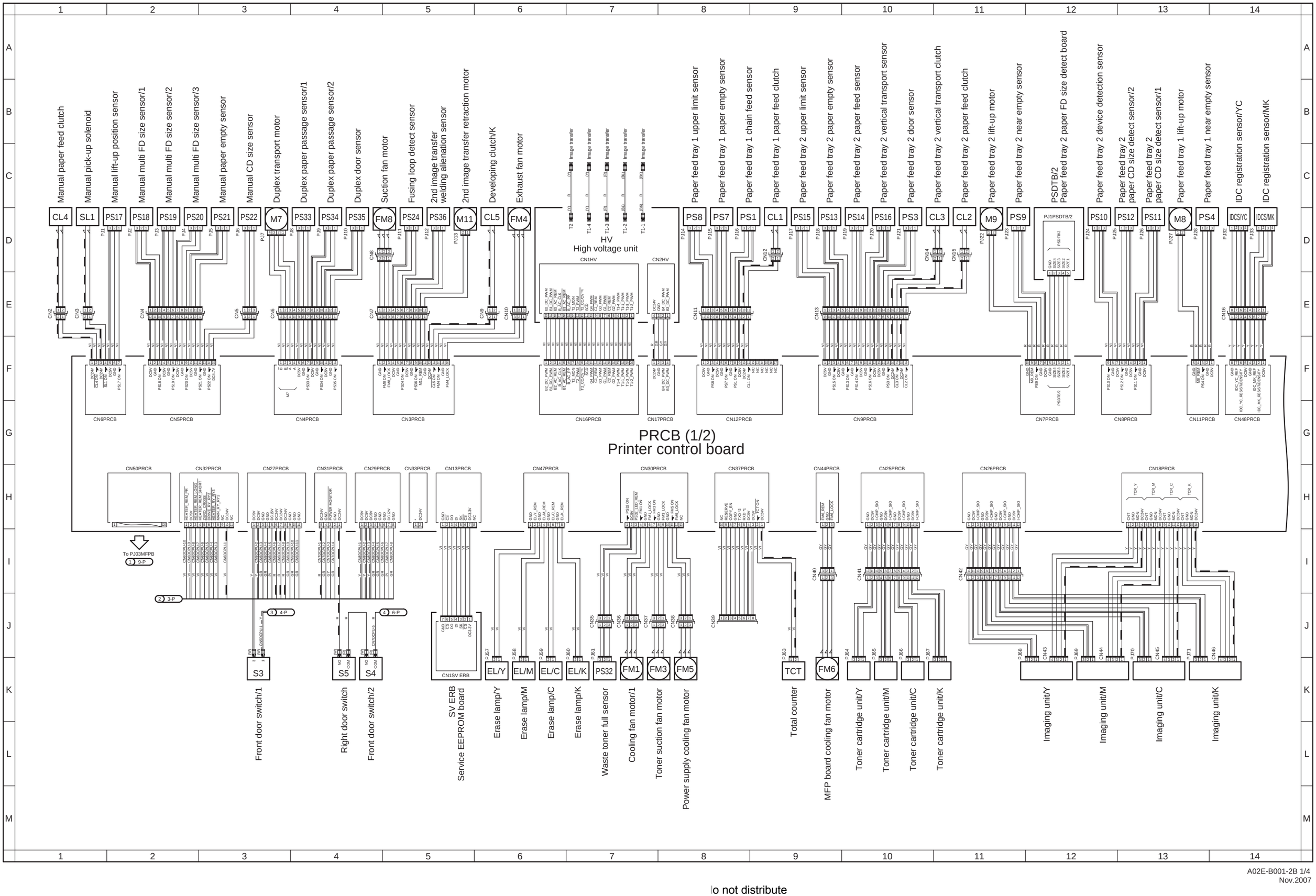

lo not distribute

bizhub C353P Overall wiring diagram 2/4

PSDTB/1
Paper feed tray 1 paper FD size detect board
Paper feed tray 1 device detection sensor
Paper feed tray 1 paper CD size detect sensor/2
Paper feed tray 1 paper CD size detect sensor/1
Temperature/humidity sensor
Paper feed tray 2 paper empty indicator board
Paper feed tray 1 paper empty indicator board
Tim. roller clutch
Sensor in front of tim. roller
Switchback motor
Fusing cooling fan motor/3
Fusing cooling fan motor/2
Fusing cooling fan motor/1
Fusing unit
Fusing motor
Transport motor
Color PC motor
Toner supply motor/CK
Toner supply motor/YM
Transfer belt retraction clutch
Color dev. unit engaged motor
Paper cooling fan motor
Color dev. unit engaged position sensor
Cooling fan motor/2
Fusing retraction motor
Fusing roller retraction sensor
Color PC drive main sensor
Black PC drive main sensor
Color PC drive sub sensor
Black PC drive sub sensor
Transfer belt retraction sensor

CN10PRCB
CN2PRCB
CN1PRCB
CN40PRCB
CN38PRCB
CN34PRCB
CN35PRCB
CN39PRCB
CN28PRCB
CN36PRCB
CN24PRCB NC
CN41PRCB NC
CN51PRCB NC
CN52PRCB NC

PRCB (2/2)
Printer control board

CN14PRCB
CN15PRCB
CN23PRCB
CN21PRCB
CN19PRCB
CN20PRCB
CN22PRCB
CN47
CN55
CN48
CN49
CN51
CN52
CN2PHREYB
CN3PHREYB
CN5PHREYB
CN4PHREYB

PC-106/205/406 (Option)
FS-519/FS-609 (Option)

PHREYB
PH relay board

CN1PHREYB
CN7PHREYB
CN6PHREYB
CN9PHREYB
CN8PHREYB
CN11REYB/PH
CN10PHREYB
CN13PHREYB
CN12PHREYB
To PJ02MFPB
PH unit

bizhub C353P Overall wiring diagram 3/4

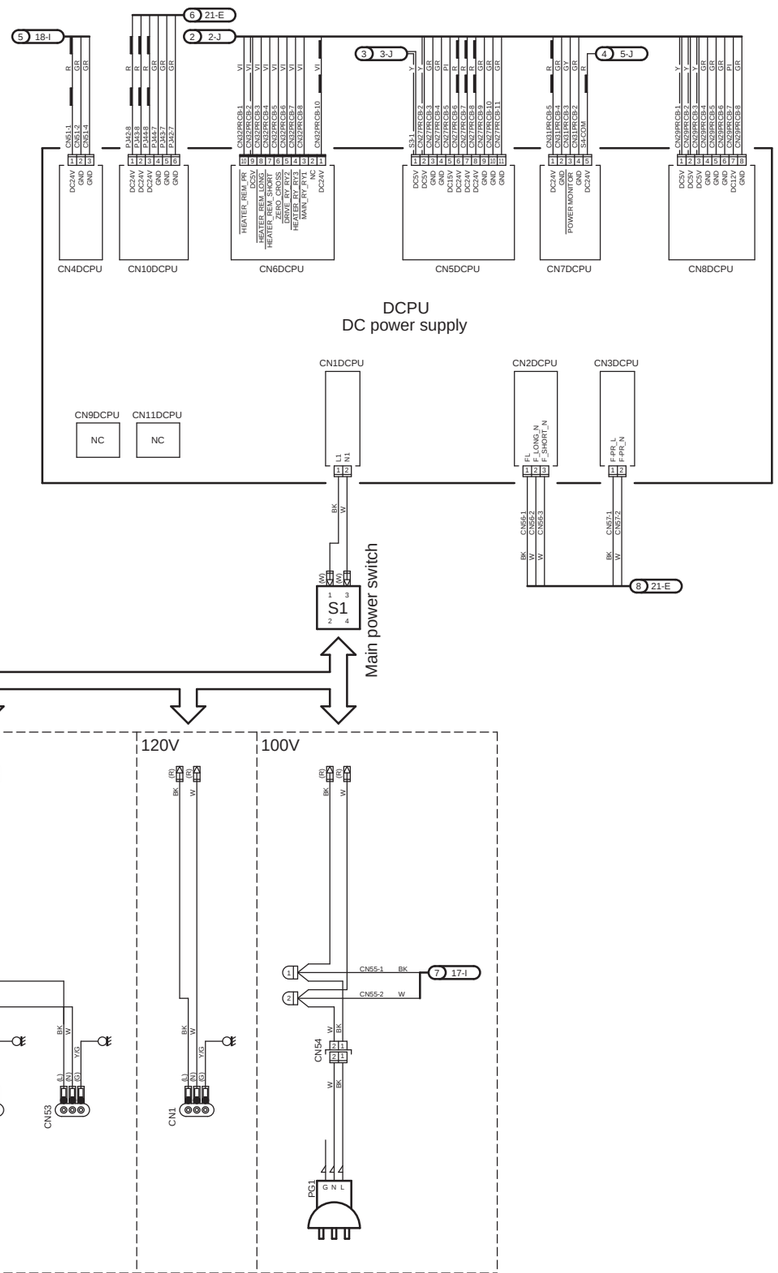

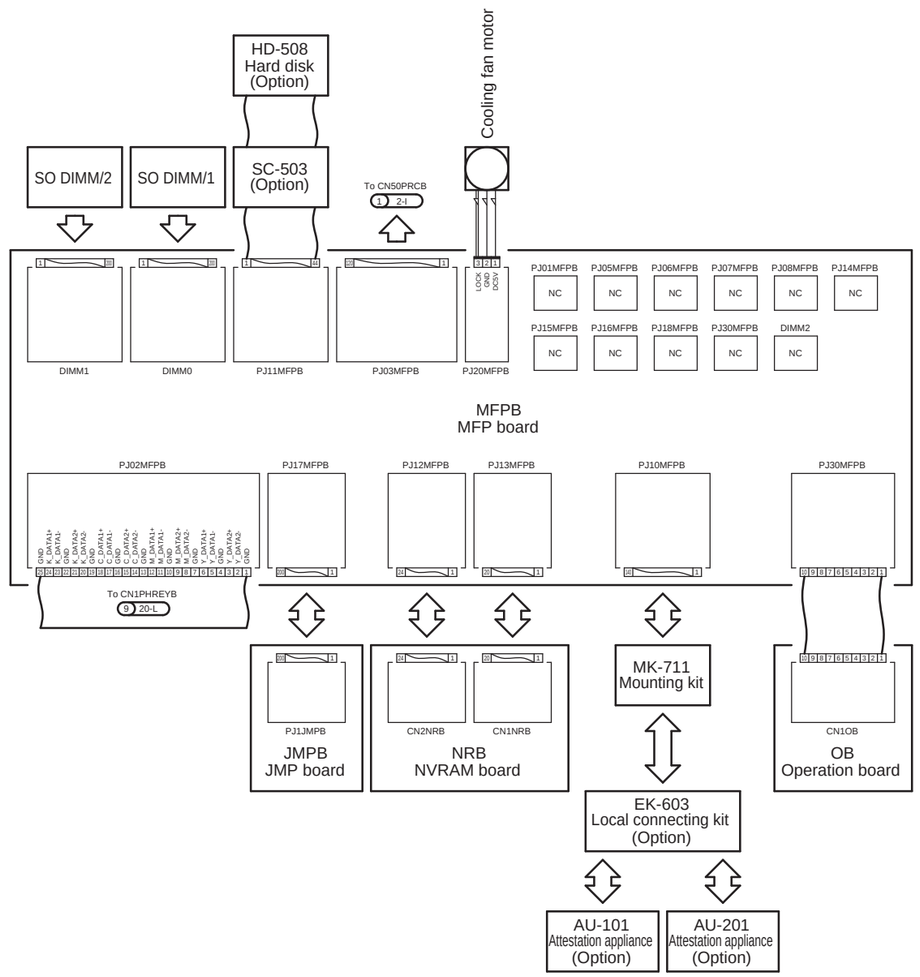

bizhub C353P Overall wiring diagram 4/4

	15	16	17	18	19	20	21	22	23	24	25	26	27	28	
N															N
O															O
P															P
Q															Q
R															R
S															S
T															T
U															U
V															V
W															W
X															X
Y															Y
Z															Z
	15	16	17	18	19	20	21	22	23	24	25	26	27	28	

DESCRIPTION

20 20-L

DESTINATION LOCATION

- CLOSED END CONNECTORS LARGE
- CLOSED END CONNECTORS MEDIUM
- CLOSED END CONNECTORS SMALL
- POSITIVE LOCK RECEPTACLE #250 WITH HOUSING
- POSITIVE LOCK RECEPTACLE #187 WITH HOUSING
- OUTPUT OF ACTIVE LOW
- OUTPUT OF ACTIVE HIGH
- INPUT OF ACTIVE LOW
- INPUT OF ACTIVE HIGH
- OUTPUT OF ACTIVE HIGH OR LOW
- INPUT OF ACTIVE HIGH OR LOW
- DC24V
- DC5V

PC-104 Overall wiring diagram

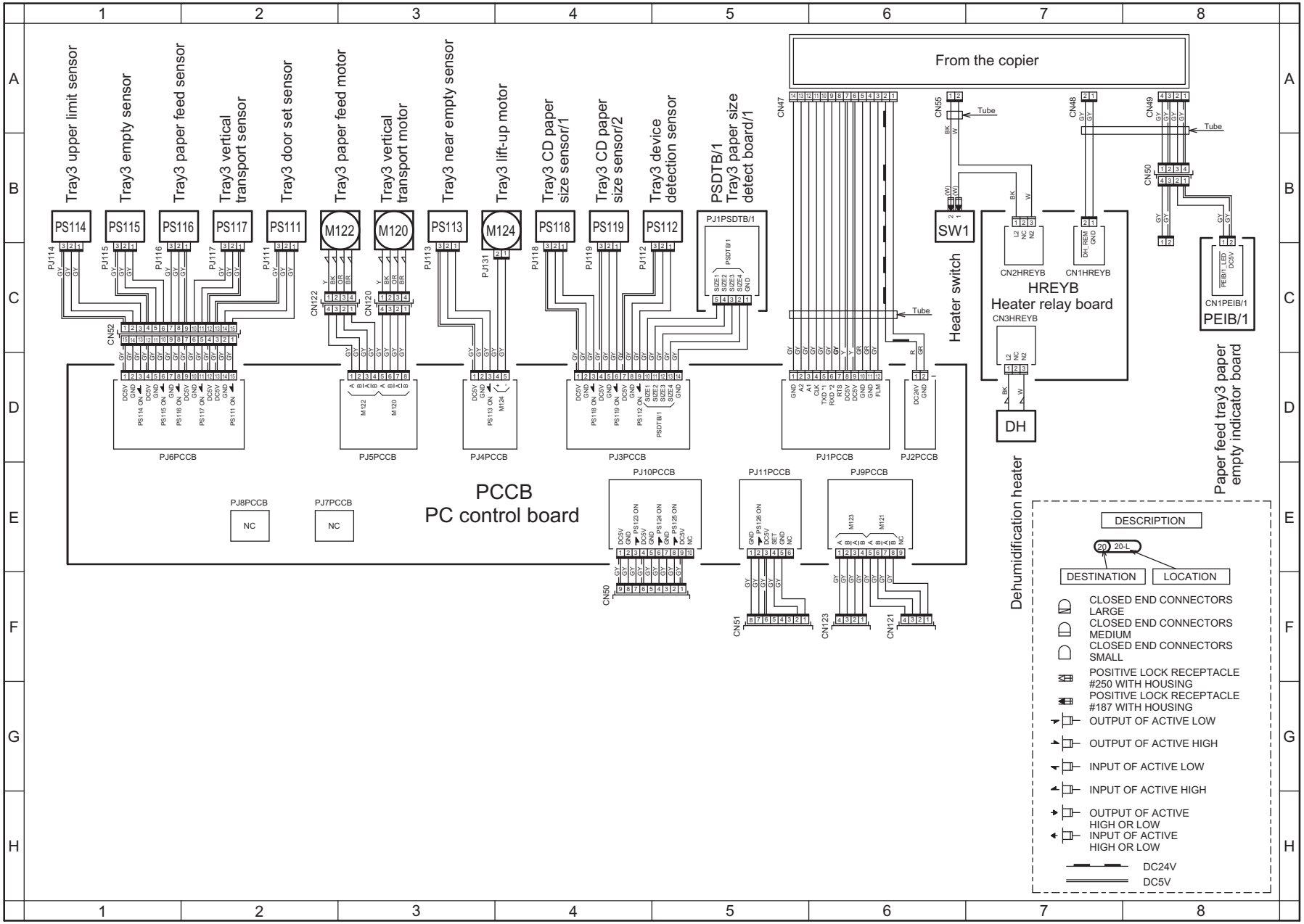

A093-B001-0B
Oct.20

PC-204 Overall wiring diagram

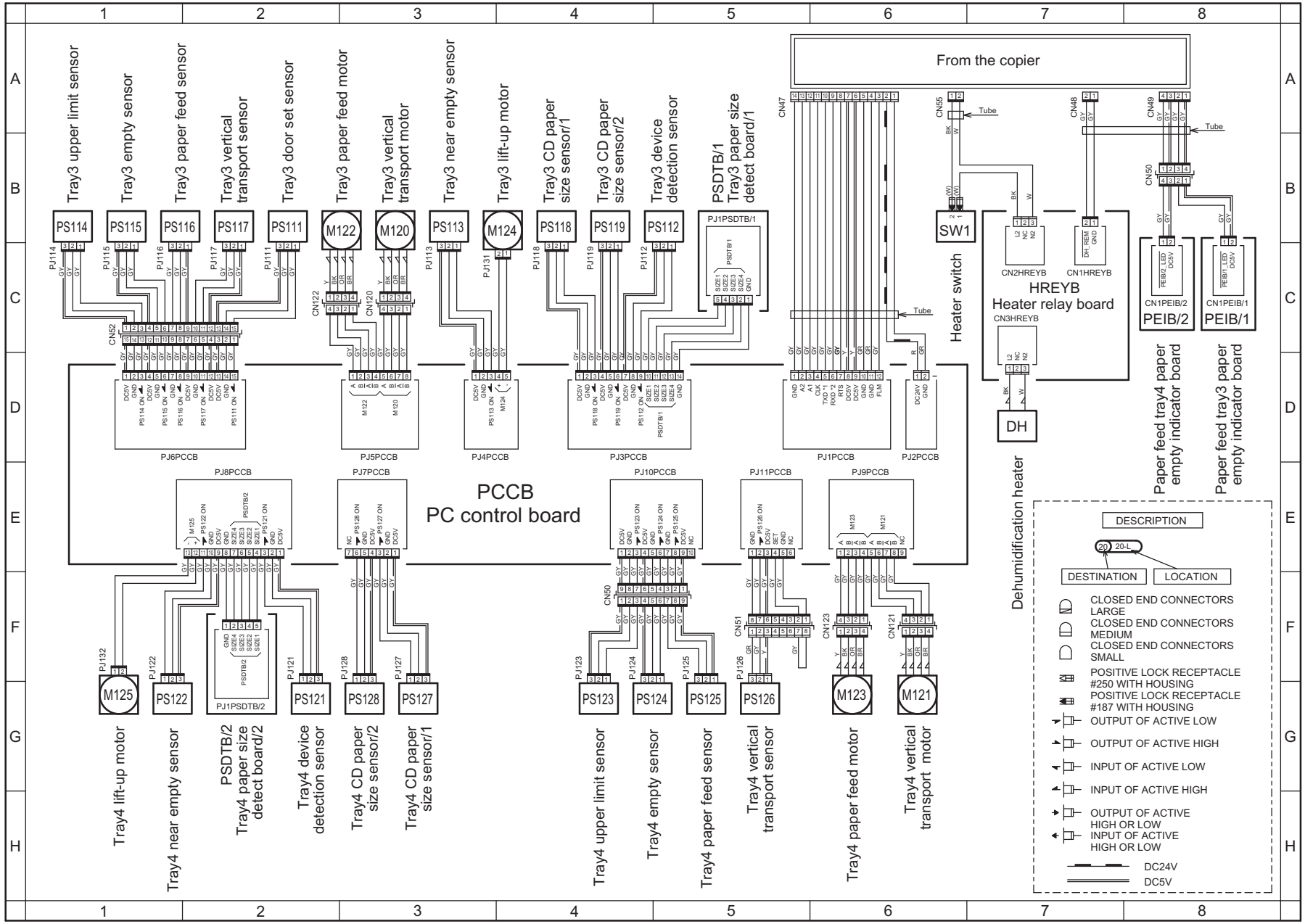

A093-B001-1A
Jul.2007

PC-405 Overall wiring diagram

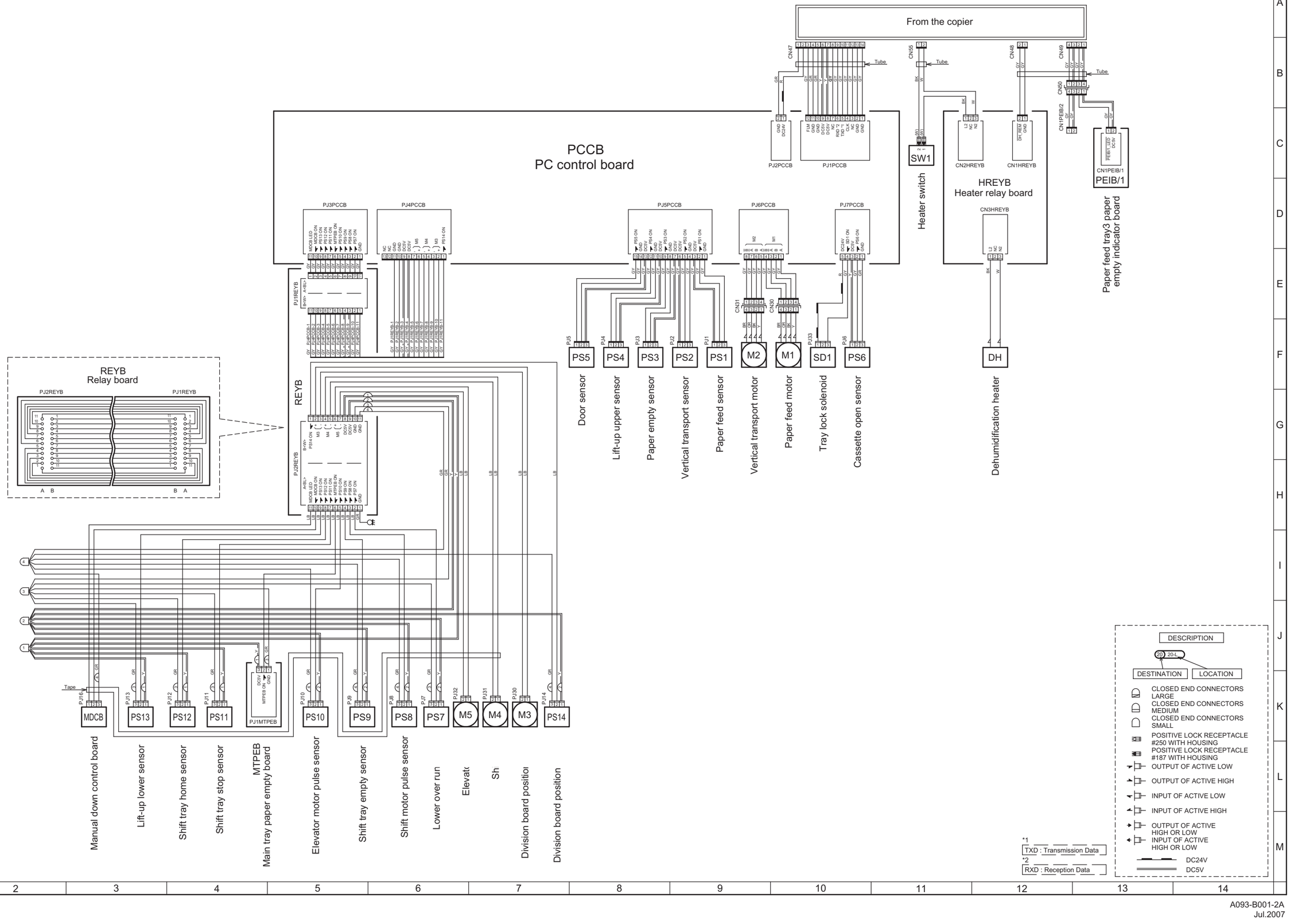

FS-519 Overall wiring diagram

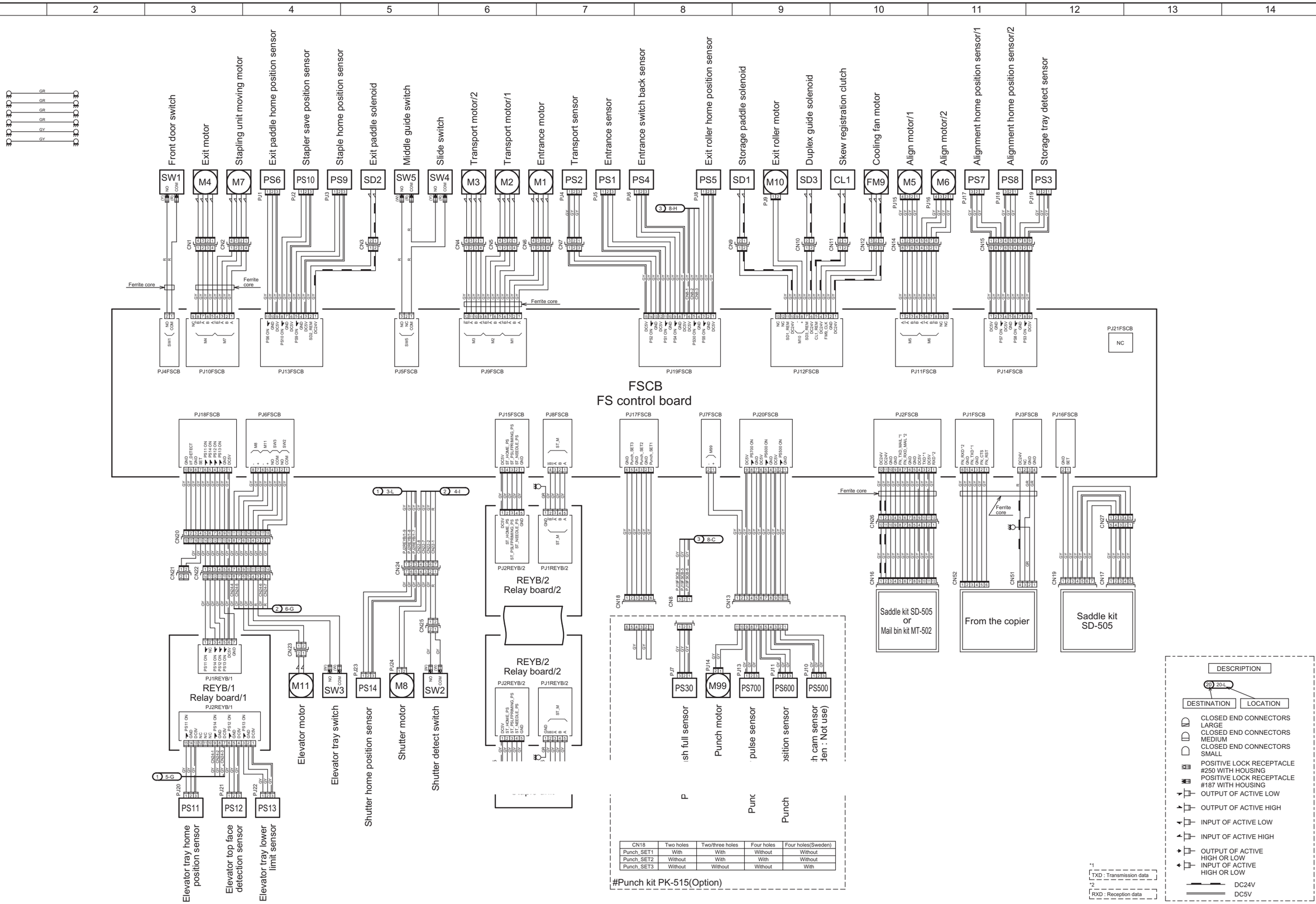

MT-502 Overall wiring diagram

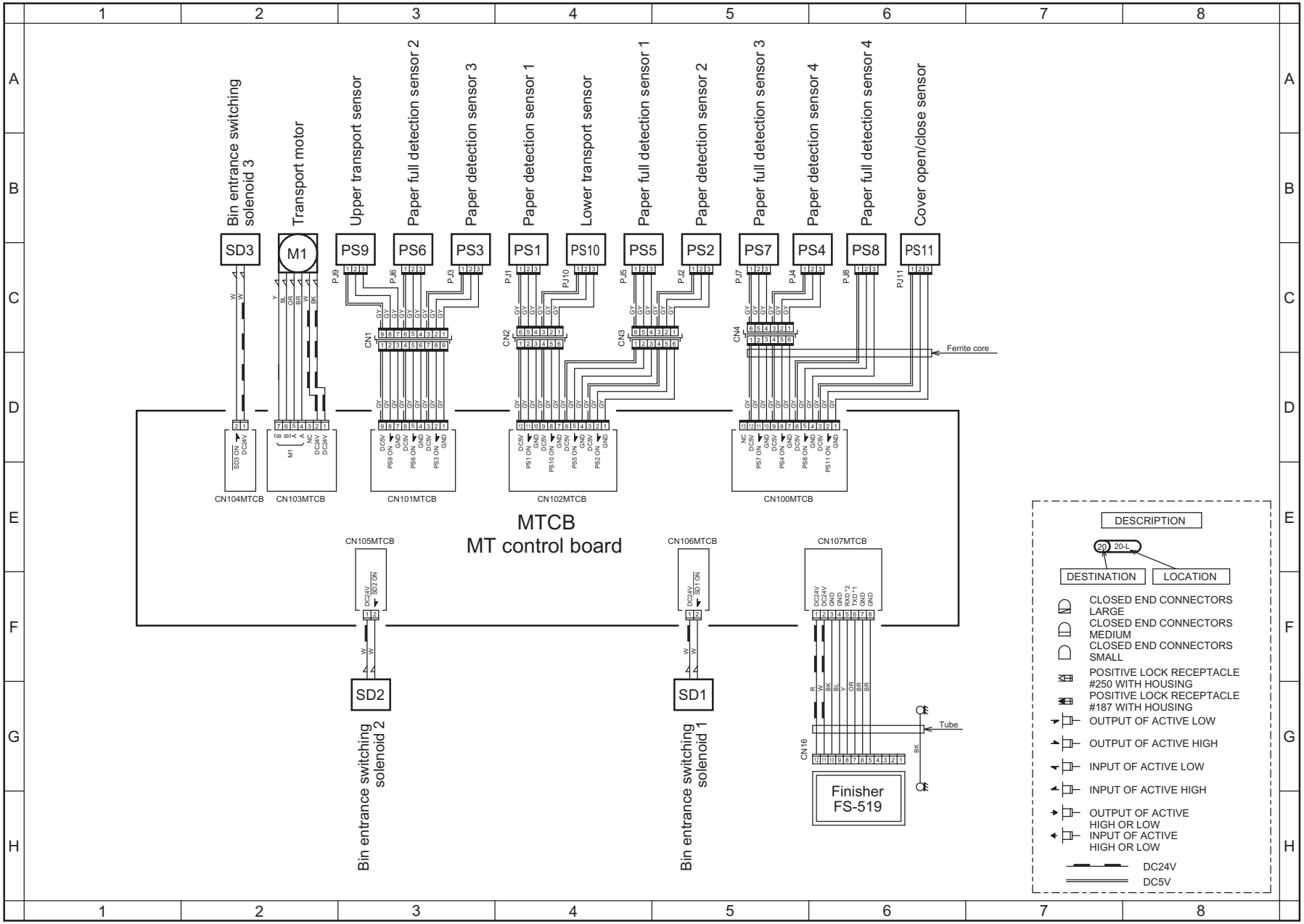

SD-505 Overall wiring diagram

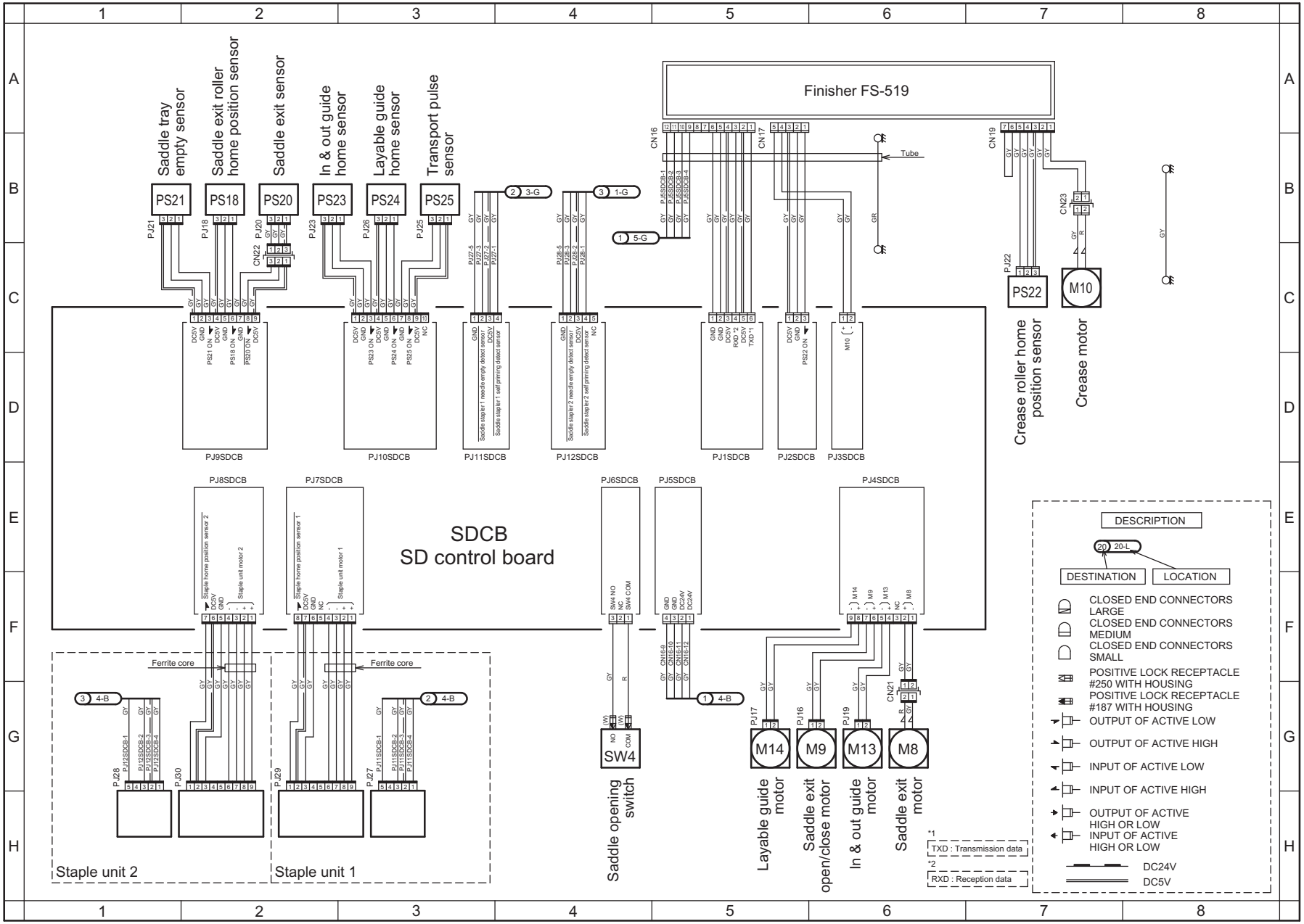

FS-609/PK-501 Overall wiring diagram

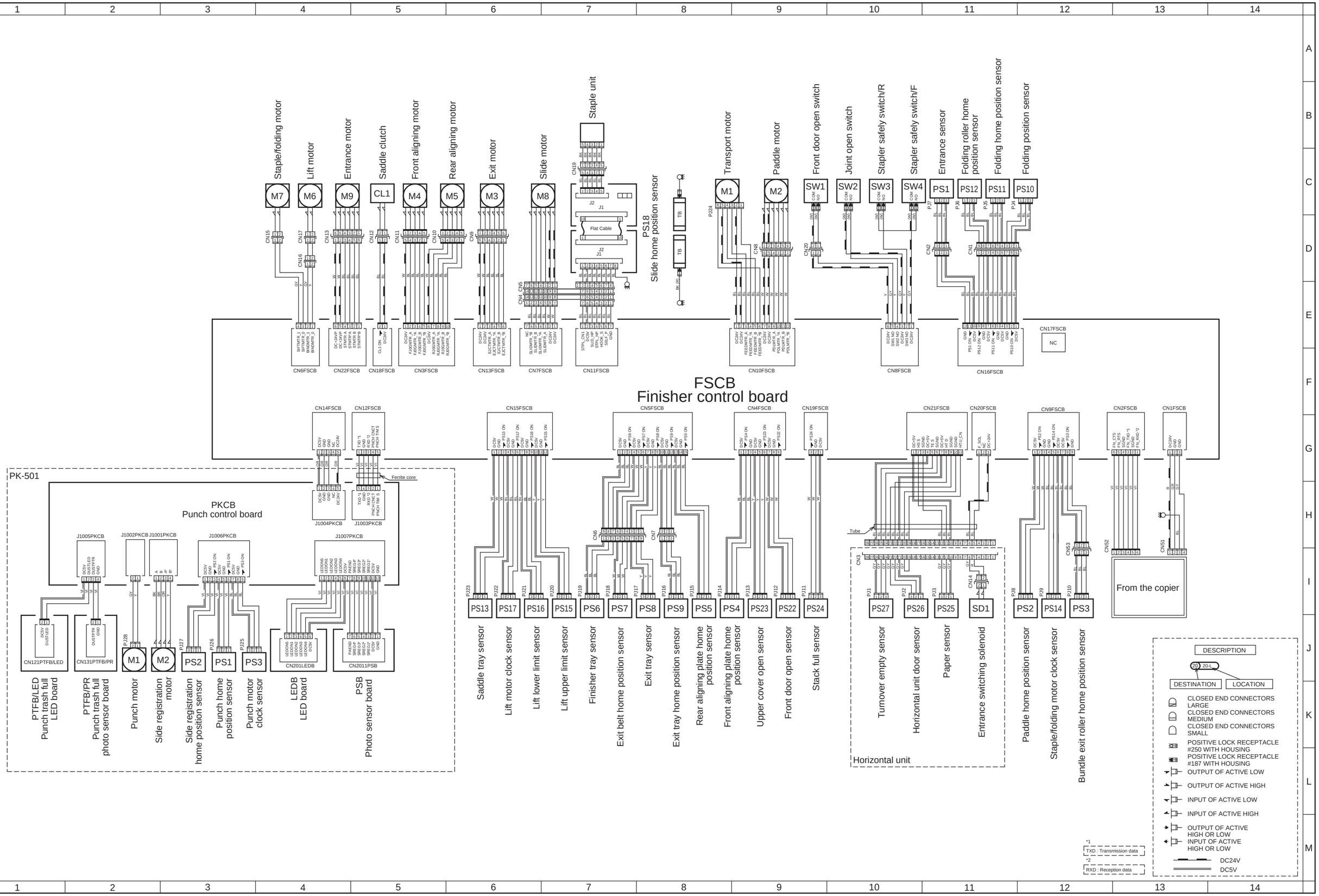

KONICA MINOLTA

KONICA MINOLTA

PARTS GUIDE MANUAL

JUNE 2008

bizhub C353P
A02E004

KONICA MINOLTA BUSINESS TECHNOLOGIES, INC.

INFORMATION FOR PARTS GUIDE MANUAL

To find correct Parts No., refer to the “HOW TO MAKE THE BEST USE OF THIS MANUAL” in the following page.

HOW TO MAKE THE BEST USE OF THIS MANUAL

1 When you order, please check the proper figures beforehand that are on Our Parts Guide Manual, and order with the appropriate figures.

2 For screws, Nuts, Washers, retaining rings and Pins which are used in this model, one letter is shown on the Standard parts column of Parts list and exploded diagrams.

3 In order to maintain safety of the product, some specific parts composed of this product are set up as "essential safety parts".

4 The assigned parts number for the "essential safety parts" is indicated as "SP00-****".
When replacing these parts, follow precautions for disassembling and installing which are listed in the Service Manual.
Do not use any parts that are not set up as

5 ♣ means that there are exclusive parts for each destination.
Please check the appropriate destination when you order.

6 Revision Mark
Marked as ▲ on the illustration shows that the revision has been made.

7 All rights reserved. (any reprints or quotations are prohibited.)
Use of this parts guide manual should be strictly supervised to avoid disclosure of confidential information.

パーツガイドマニュアルのご案内

サービス部品をご発注の際には、下記に示す “パーツガイドマニュアルの活用にあたって”をご参照の上、正しい部品番号にてお願い致します。

パーツガイドマニュアルの活用にあたって

1 部品発注の際には、掲載されている部品番号の桁数を確認し、掲載されている桁数で発注願います。

2 この製品に使用されているネジ、ナット、ワッシャー、止め輪、ピンなどは、リストの右側の Standard parts 欄に a,b,c,……で表示し、イラストにも a,b,c,……表示してあります。

3 製品の安全性を維持する為に、製品に使用される特定の部品を「重要保安部品」として設定しています。

4 重要保安部品の部品番号は、″SP00−****″ と記載されていますので、部品交換時は、サービスマニュアル記載の分解・組み立ての注意事項に従って作業をして下さい。
また、指定以外の部品は一切使用しないで下さい。

5 本文に ♣ が表示されている部品は、仕向け地毎に専用部品がある事を意味しています。
オーダーされる時は、仕向け地を確認して下さい。

6 改訂記号について
イラスト上に▲印が表示されている部分は、改訂された事を表します。

7 版権所有 （無断転載及び無断引用の禁止）
本パーツガイドマニュアルについては、機密保持等その扱いには十分注意して下さい。万一取り扱いを誤った場合には、法律で処罰されることがあります。

10/31/2007

SYSTEM OUTLINE

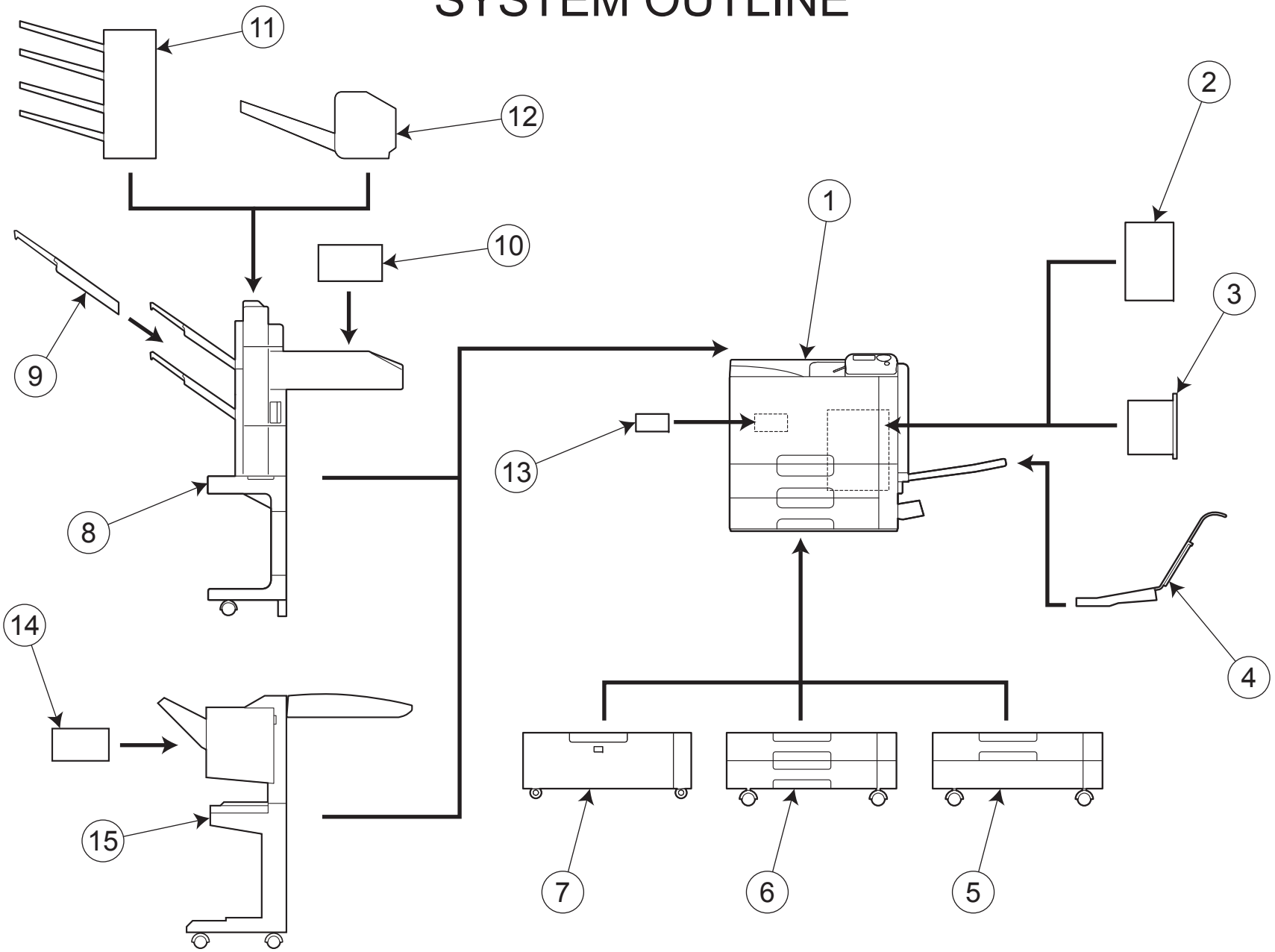

bizhub C353P

GENERAL CONTENTS

No.	Description	Model
1	PRINTER COLOR	bizhub C353P
2	OTHER OPTION	MK-711
3	OTHER OPTION	EK-603
4	OTHER OPTION	MK-713
5	PAPER FEEDER	PC-104
6	PAPER FEEDER	PC-204
7	PAPER FEEDER	PC-405
8	SORTER/FINISHER	FS-519
9	OTHER OPTION	OT-602
10	PUNCH UNIT	PK-515
11	SORTER/FINISHER	MT-502
12	SORTER/FINISHER	SD-505
13	OTHER OPTION	HD-508
14	PUNCH UNIT	PK-501/PK-4/PK131
15	SORTER/FINISHER	FS-609

DIAGRAM OF MAIN PARTS SECTION

REAR SIDE 2 8 18 19 20 21 22
23 24 26 27 28

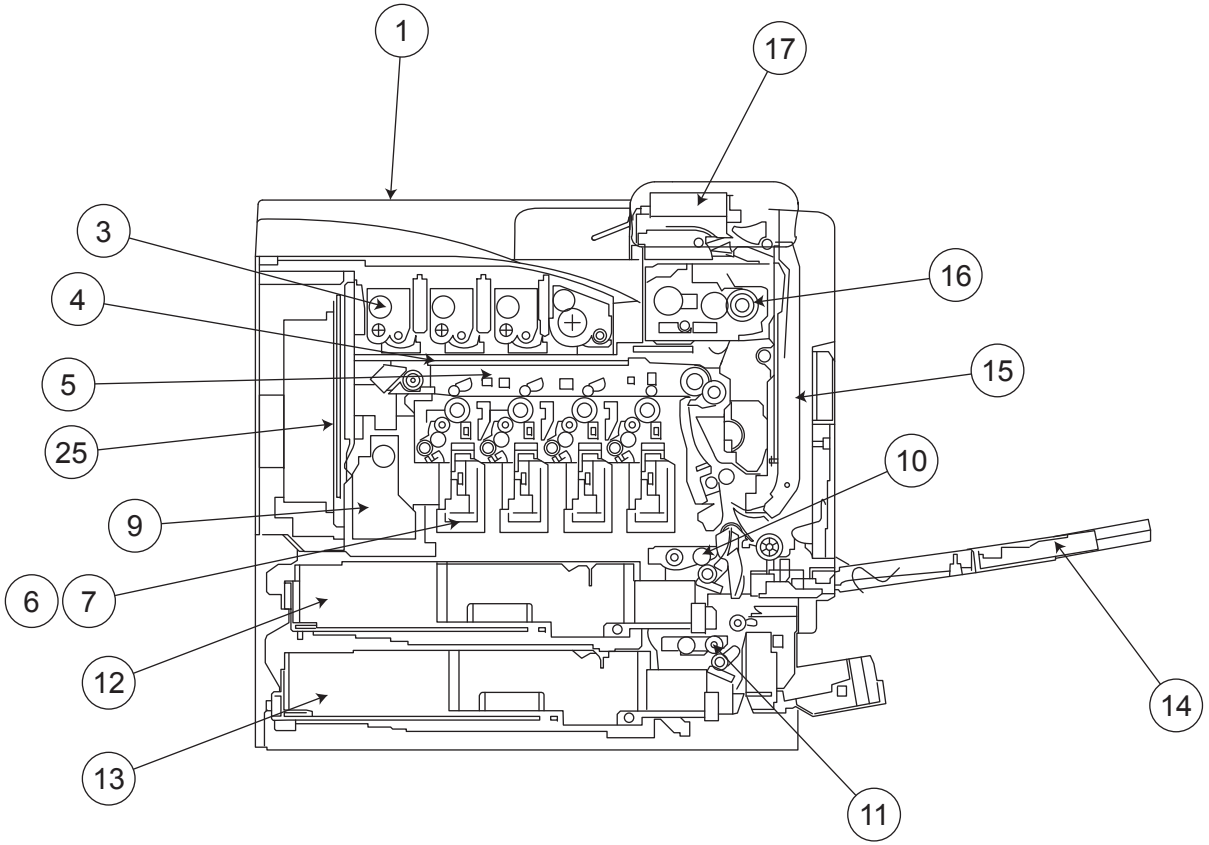

CONTENTS

No.	DESCRIPTION	名称	PAGE No.
1	EXTERNAL PARTS	外装部	P1 P2
2	INNER COVER SECTION	２次カバー部	P3
3	T/C RAIL SECTION	Ｔ ／ Ｃ レール部	P4
4	ERASE LAMP SECTION	イレーサランプ部	P5
5	TRANSFER BELT UNIT	転写ベルトユニット	P6
6	P/H FRAME SECTION	Ｐ ／ Ｈ フレーム部	P7
7	PRINT HEAD SECTION	Ｐ ／ Ｈ 部	P8
8	TONER CONVEYANCE SECTION	トナー搬送部	P9 P10
9	TONER COLLECTING SECTION	トナー回収部	P11
10	1ST PAPER FEED SECTION	１段目給紙部	P12 P13
11	2ND PAPER FEED SECTION	２段目給紙部	P14 P15 P16
12	1ST CASSETTE SECTION	１段目カセット部	P17 P18
13	2ND CASSETTE SECTION	２段目カセット部	P19 P20
14	MANUAL FEED TRAY UNIT	手差し給紙部	P21 P22 P23 P24
15	ADU/VERTICAL CONVEYANCE SECTION	ＡＤＵ ／縦搬送部	P25 P26 P27 P28 P29
16	FUSING SECTION	定着部	P30
17	PAPER EXIT SECTION	排紙	P31 P32
18	MAIN DRIVE SECTION	メイン駆動部	P33
19	FEED/TRANSPORT DRIVE SECTION	給紙／搬送駆動部	P34
20	FUSING DRIVE SECTION	定着駆動部	P35
21	MAIN FRAME SECTION	メインフレーム部	P36
22	LOWER FRAME SECTION	下フレーム部	P37
23	SIZE DETECTING SECTION	給紙サイズ検出	P38
24	HIGH VOLTAGE UNIT	高圧基板	P39
25	MAIN POWER SUPPLY UNIT	電源基板	P40
26	REAR ELECTRICAL SECTION	背面電気部品	P41
27	REAR FAN SECTION	背面排気	P42
28	SHIELD BOX SECTION	シールドボックス部	P43
29	WIRING	束線	P44 P45 P46 P47 P48
30	WIRING ACCESSORIES AND JIGS	配線部品・治具	P49
31	ACCESSORY PARTS	同梱部品	P50

INDEX

Parts No.	Page No.
0990 5596 01	49-15
0992 3014 01	18-23
0992 3014 01	20-17
0996 3055 01	36-14
0996 3055 01	37-24
1050 4805 01	49-12
1053 3103 01	1-9
1065 3086 01	12-16
1065 3086 01	14-21
1065 5872 02	49-16
1067 2501 01	8-17
1067 2501 01	12-17
1067 2501 01	14-22
1134 3042 02	21-5
1144 5200 01	35-7
1154 4670 01	25-8
1154 4670 01	42-13
1164 3527 02	29-22
1200 3121 09	34-2
1274 3603 01	18-6
1274 3603 01	20-20
4002 3108 01	17-10
4002 3110 01	38-2
4002 3131 01	38-1
4002 7306 01	18-10
4002 7306 01	20-3
4004 2545 01	10-16
4004 2545 01	34-9
4004 3503 02	29-14
4004 3504 02	29-15
4004 5339 01	10-12
4011 3012 01	38-22
4011 3020 01	18-5
4011 3020 01	20-22
4011 3021 01	18-4
4011 3021 01	20-21
4025 2283 01	43-17
4025 3572 01	29-13
4025 5984 01	32-11
4030 3003 01	12-22
4030 3003 01	14-19
4030 3008 01	12-23
4030 3008 01	14-17
4030 3013 01	13-9
4030 3013 01	15-8
4030 3014 01	13-8
4030 3014 01	15-6
4030 3016 12	12-8
4030 3016 12	14-8
4030 3017 03	13-7
4030 3017 03	15-7
4030 3030 01	12-15
4030 3030 01	14-20
4030 3039 01	13-5
4030 3039 01	15-5
4030 3047 02	38-21
4030 3078 01	13-6
4030 3078 01	15-4
4030 3081 01	38-7
4030 3083 01	38-9
4030 3091 01	38-19
4030 3105 01	15-11
4030 3122 01	16-6
4030 3123 01	16-2
4030 3125 01	13-12
4030 3125 01	15-9
4030 3206 01	18-2
4030 3206 01	20-25
4030 3207 01	18-3
4030 3207 01	20-23
4030 3214 02	18-15
4030 3214 02	20-6
4030 3215 01	18-16
4030 3215 01	20-7
4030 3223 03	17-15
4030 3223 03	19-18
4030 3224 02	38-8
4030 3226 01	17-2
4030 3226 01	19-2
4030 3228 12	17-16
4030 3228 12	19-17
4030 3402 01	23-4
4030 3403 01	23-6
4030 3446 01	21-3
4030 3475 01	23-12
4030 3489 01	23-5
4034 0151 01	23-8
4036 2549 01	31-12
4036 5765 01	25-19
4037 0104 01	38-20
4037 0775 01	41-8
4037 0901 01	11-4
4037 0906 01	12-13
4037 0906 01	14-14
4037 0906 01	21-8
4037 0906 01	26-2
4037 0906 01	29-23
4037 0906 01	38-3
4037 2239 02	41-7
4037 3204 01	18-18
4037 3204 01	20-12
4038 1014 01	3-22
4038 1046 01	1-13
4038 1051 01	1-11
4038 1906 04	8-2
4038 2016 02	7-9
4038 2018 03	7-11
4038 2026 01	6-14
4038 2027 01	6-11
4038 2028 01	6-13
4038 2029 01	6-12
4038 2038 02	4-1
4038 2042 01	8-16
4038 2045 01	6-30
4038 2046 01	6-27
4038 2047 02	6-28
4038 2048 01	6-32
4038 2051 01	7-1
4038 2052 02	9-12
4038 2053 02	9-13
4038 2056 02	9-11
4038 2061 01	7-12
4038 2062 01	37-6
4038 2069 01	5-16
4038 2072 04	5-15
4038 2077 13	6-24
4038 2078 13	6-25
4038 2080 01	6-29
4038 2083 02	1-22
4038 2084 06	1-21
4038 2094 01	7-8
4038 2098 01	33-5
4038 2099 01	37-11
4038 2110 03	4-8
4038 2114 01	10-20
4038 2143 01	10-19
4038 2152 13	6-23
4038 2153 13	6-26
4038 2162 02	37-29
4038 2179 01	8-14
4038 2180 01	8-15
4038 2184 01	8-13
4038 2187 04	8-4
4038 2188 02	8-12
4038 2189 01	8-6
4038 2190 03	8-7
4038 2191 02	8-8
4038 2192 02	8-5
4038 2193 03	8-10
4038 2194 01	8-9
4038 2196 01	8-11
4038 2203 01	39-10
4038 2205 02	6-16
4038 2207 01	6-17
4038 2222 01	39-4
4038 2225 02	39-11
4038 2233 02	39-5
4038 2275 01	34-1
4038 2276 01	39-15
4038 2281 04	3-10
4038 2282 03	3-11
4038 2283 02	3-14
4038 2287 02	3-5
4038 2578 01	34-23
4038 2580 01	35-22
4038 2592 01	35-28
4038 2593 02	35-32
4038 3234 02	21-19
4038 3237 01	24-6
4038 3268 02	23-16
4038 3269 02	23-15
4038 3270 01	23-14
4038 3502 02	29-10
4038 3511 02	28-2
4038 3516 01	28-10
4038 3520 01	27-12
4038 3525 01	29-16
4038 3536 01	29-8
4038 3537 01	29-3
4038 3538 01	29-5
4038 3539 01	29-4
4038 3540 03	29-37
4038 3541 01	37-12
4038 3542 02	27-11
4038 3553 01	27-5
4038 3559 01	29-2
4038 3561 03	29-24
4038 3562 01	29-21
4038 3567 01	29-18
4038 3571 02	27-14
4038 3592 01	29-33
4038 3593 01	29-31
4038 3597 01	29-30
4038 4611 01	27-10
4038 4620 01	27-9
4038 5603 00	29-34
4038 5860 01	32-10
4038 5886 03	31-10
4038 7023 00	29-11
4038 7316 01	4-3

Parts No.	Page No.
4039 2209 01	36-7
4040 3097 01	12-14
4040 3097 01	14-16
4066 3705 01	25-3
4128 3522 01	29-19
4128 3823 01	18-20
4128 3823 01	20-14
4131 2536 02	34-13
4131 2536 02	35-31
4131 3003 01	12-4
4131 3003 01	14-9
4131 3532 02	16-14
4131 3532 02	24-16
4131 3904 02	32-9
4142 3217 01	24-13
4163 5293 01	6-10
4163 5293 01	18-12
4163 5293 01	20-2
4163 5293 01	25-18
4163 5293 01	27-7
4163 5293 01	31-6
4163 5293 01	32-12
4163 5293 01	42-2
4348 3054 01	16-10
4348 3058 01	16-3
4425 3013 01	12-12
4425 3013 01	14-13
4425 3016 01	12-24
4425 3016 01	14-18
4475 2603 02	1-12
4497 3116 01	25-14
4497 3116 01	26-14
4498 3469 01	17-21
4498 3469 01	19-13
4498 3825 01	18-21
4498 3825 01	20-15
4498 3826 01	18-19
4498 3826 01	20-13
4498 3834 01	17-6
4498 3834 01	19-6

Parts No.	Page No.
4537 3317 01	18-9
4537 3317 01	20-1
4657 3736 01	25-6
4658 3516 01	34-17
4658 3516 01	35-8
4687 3281 01	22-6
9313 1000 72	3-26
9313 1000 72	37-1
9313 1300 51	3-2
9313 1400 31	42-7
9335 1300 61	6-6
9335 1300 61	24-2
9335 1300 61	25-9
9335 1300 61	35-5
9335 1300 61	38-5
9381 4101 31	50-9
9384 1521 51	49-18
9384 2200 31	50-5
9455 8076 01	23-23
9J03 M100 00	31-7
9J03 M100 00	33-2
9J03 M100 00	42-3
9J06 2079 01	30-4
9J06 2082 01	30-2
9J06 2086 01	7-3
9J06 2101 00	34-15
9J06 2101 00	35-42
9J06 2460 01	3-13
9J06 2461 01	5-11
9J06 2462 01	30-3
9J06 2463 02	30-6
9J06 2472 00	5-9
9J06 2543 01	35-37
9J06 2546 01	35-24
9J06 2572 01	35-40
9J06 2574 01	35-19
9J06 2575 01	35-26
9J06 2595 02	35-21
9J06 3215 02	21-14
9J06 3235 01	21-17

Parts No.	Page No.
9J06 3286 02	21-12
9J06 7301 01	41-3
9J06 7302 01	41-4
9J06 M103 00	38-4
9J06 M200 00	24-17
9J06 M601 00	3-8
A00J 1396 00	43-16
A00J 1681 02	37-18
A00J 1699 01	50-6
A00J 5636 00	12-10
A00J 5636 00	14-11
A00J 6222 00	18-13
A00J 6222 00	20-4
A00J 6234 00	17-1
A00J 6234 00	19-1
A00J 6234 00	22-7
A00J 9421 02	19-9
A00J 9422 02	17-14
A00J 9422 02	19-14
A00J 9423 02	19-10
A00J 9450 00	1-31
A00J 9452 01	2-11
A00J 9455 00	1-19
A00J 9457 00	1-31
A00J H00D 00	37-16
A011 9462 00	1-32
A02E 1006 01	29-32
A02E 1007 00	37-27
A02E 1008 01	37-15
A02E 1009 02	37-9
A02E 1013 01	37-13
A02E 1014 00	36-13
A02E 1015 01	37-25
A02E 1017 02	37-26
A02E 1019 02	4-2
A02E 1021 00	37-28
A02E 1022 00	4-9
A02E 1023 01	4-10
A02E 1024 01	4-11
A02E 1029 00	37-10

Parts No.	Page No.
A02E 1033 11	5-2
A02E 1034 00	5-10
A02E 1035 00	5-8
A02E 1035 00	5-12
A02E 1037 00	5-13
A02E 1047 00	9-10
A02E 1048 00	8-3
A02E 1049 01	37-14
A02E 1050 00	3-33
A02E 1051 00	5-7
A02E 1053 11	5-3
A02E 1054 00	5-6
A02E 1055 00	7-4
A02E 1057 01	30-5
A02E 1058 00	7-10
A02E 1060 01	4-4
A02E 1061 01	4-4
A02E 1062 01	4-4
A02E 1101 00	6-22
A02E 1102 00	6-20
A02E 1103 00	6-15
A02E 1104 00	6-18
A02E 1105 00	6-19
A02E 1106 00	33-9
A02E 1107 00	6-21
A02E 1108 00	6-31
A02E 1121 11	6-4
A02E 1122 12	6-3
A02E 1123 00	6-2
A02E 1142 00	43-4
A02E 1149 01	42-4
A02E 1150 00	42-5
A02E 1151 00	33-3
A02E 1152 00	2-4
A02E 1153 00	33-6
A02E 1154 00	33-1
A02E 1156 00	33-4
A02E 1160 00	1-8
A02E 1161 02	3-28
A02E 1162 00	1-23

Parts No.	Page No.
A02E 1163 00	1-25
A02E 1164 00	1-26
A02E 1165 00	1-24
A02E 1166 00	3-30
A02E 1167 00	3-29
A02E 1172 00	37-5
A02E 1173 00	37-2
A02E 1175 01	37-3
A02E 1179 00	7-2
A02E 1190 01	36-5
A02E 1191 00	36-4
A02E 1192 01	36-3
A02E 1193 00	36-2
A02E 1194 00	36-1
A02E 1195 00	36-9
A02E 1196 00	36-6
A02E 1201 00	36-12
A02E 1203 01	3-1
A02E 1204 00	5-17
A02E 1205 00	3-31
A02E 1206 01	36-11
A02E 1207 00	36-8
A02E 1252 01	41-10
A02E 1321 01	39-8
A02E 1322 00	39-6
A02E 1323 01	39-13
A02E 1324 00	39-16
A02E 1327 00	39-9
A02E 1328 00	39-7
A02E 1329 00	39-2
A02E 1330 00	7-6
A02E 1332 00	39-12
A02E 1333 00	39-14
A02E 1381 00	3-4
A02E 1382 00	36-10
A02E 1383 00	3-25
A02E 1384 00	3-6
A02E 1400 00	43-5
A02E 1401 00	43-10
A02E 1451 01	42-1

Parts No.	Page No.
A02E 1452 00	43-11
A02E 1453 00	43-15
A02E 1454 01	42-9
A02E 1456 00	42-10
A02E 1457 01	42-11
A02E 1458 00	42-12
A02E 1461 00	43-9
A02E 1462 00	42-14
A02E 1465 01	43-21
A02E 1471 01	41-5
A02E 1472 01	41-2
A02E 1480 03	40-5
A02E 1481 00	10-24
A02E 1483 00	40-3
A02E 1484 00	40-4
A02E 1487 00	42-8
A02E 1490 00	43-18
A02E 1491 00	43-19
A02E 1492 00	43-20
A02E 1493 01	41-5
A02E 1496 01	1-7
A02E 1497 00	43-24
A02E 1498 00	41-13
A02E 1610 00	1-16
A02E 1611 00	1-29
A02E 1612 00	1-10
A02E 1613 00	1-17
A02E 1614 01	3-17
A02E 1615 00	1-5
A02E 1616 00	1-28
A02E 1618 00	3-18
A02E 1620 00	1-2
A02E 1621 00	1-3
A02E 1623 00	1-14
A02E 1624 02	1-27
A02E 1625 00	43-1
A02E 1626 00	43-3
A02E 1627 00	43-2
A02E 1628 00	2-12
A02E 1629 00	2-6

Parts No.	Page No.
A02E 1630 00	2-8
A02E 1631 02	37-20
A02E 1632 00	2-9
A02E 1633 00	2-10
A02E 1634 00	37-17
A02E 1636 01	2-5
A02E 1637 00	1-4
A02E 1639 00	50-1
A02E 1642 00	37-19
A02E 1643 00	2-13
A02E 1644 00	2-3
A02E 1646 00	2-7
A02E 1662 04	2-2
A02E 1665 01	1-18
A02E 1666 02	2-1
A02E 1701 00	3-32
A02E 1702 00	3-16
A02E 1703 00	3-21
A02E 2201 00	34-19
A02E 2202 00	34-14
A02E 2204 00	38-10
A02E 2205 00	38-11
A02E 2206 00	38-12
A02E 2207 00	38-16
A02E 2208 00	38-15
A02E 2209 00	38-14
A02E 2210 00	38-17
A02E 2211 00	38-13
A02E 2290 00	33-8
A02E 2290 00	34-4
A02E 2302 00	35-3
A02E 2303 00	35-1
A02E 2310 11	35-12
A02E 2312 00	35-23
A02E 2314 00	35-15
A02E 2315 00	35-36
A02E 2316 00	35-35
A02E 2450 00	10-14
A02E 2451 00	10-11
A02E 2452 01	10-10

Parts No.	Page No.
A02E 2453 02	10-17
A02E 2508 00	34-25
A02E 2513 00	34-5
A02E 2514 00	34-30
A02E 2515 00	34-16
A02E 2517 00	34-26
A02E 2518 00	33-7
A02E 2519 00	34-11
A02E 2520 01	34-22
A02E 2523 01	34-29
A02E 2524 00	34-6
A02E 2526 02	34-18
A02E 2529 00	34-10
A02E 2531 00	34-21
A02E 2532 00	34-20
A02E 2535 02	34-7
A02E 2536 00	34-32
A02E 2539 00	34-24
A02E 2542 00	35-13
A02E 2544 00	35-14
A02E 2545 00	35-34
A02E 2549 00	34-28
A02E 2551 00	34-27
A02E 2556 12	35-38
A02E 2557 12	35-18
A02E 2563 00	35-33
A02E 2570 00	35-4
A02E 2571 00	35-9
A02E 2573 00	35-6
A02E 2576 01	35-25
A02E 2579 00	10-15
A02E 2582 00	35-10
A02E 2584 01	35-17
A02E 2585 00	35-2
A02E 2586 01	10-13
A02E 2587 00	35-20
A02E 2591 00	35-16
A02E 2594 00	35-27
A02E 2596 00	35-29
A02E 2597 00	34-3

Parts No.	Page No.
A02E 2598 01	34-12
A02E 2599 00	34-8
A02E 3601 01	9-17
A02E 3602 00	9-16
A02E 3603 00	9-14
A02E 3604 00	9-15
A02E 3611 01	10-18
A02E 3613 00	10-7
A02E 3614 00	10-4
A02E 3615 00	10-2
A02E 3616 01	10-1
A02E 3617 00	10-8
A02E 3618 00	10-9
A02E 3619 00	10-3
A02E 3622 00	10-27
A02E 3625 00	10-6
A02E 3626 00	10-5
A02E 3627 00	10-25
A02E 3628 00	10-21
A02E 3630 00	10-30
A02E 3631 00	10-22
A02E 3634 00	10-23
A02E 3635 00	10-26
A02E 3636 00	10-29
A02E 3637 00	9-20
A02E 3640 01	11-8
A02E 3641 01	11-6
A02E 3642 01	11-10
A02E 3643 00	11-9
A02E 3644 01	11-7
A02E 3650 01	11-2
A02E 3651 00	11-3
A02E 3660 01	4-7
A02E 3661 00	4-6
A02E 3662 01	4-5
A02E 3670 00	9-19
A02E 3671 01	9-18
A02E 3673 00	9-7
A02E 3674 01	9-5
A02E 3676 00	9-1

Parts No.	Page No.
A02E 3677 00	9-2
A02E 3678 00	9-22
A02E 3679 01	9-9
A02E 3680 00	9-23
A02E 3681 00	9-8
A02E 3682 01	9-3
A02E 3683 00	9-21
A02E 3684 00	9-6
A02E 3687 00	9-4
A02E 5033 01	6-34
A02E 5601 01	12-9
A02E 5603 00	12-29
A02E 5603 00	14-30
A02E 5604 00	12-26
A02E 5605 00	12-21
A02E 5605 00	14-23
A02E 5606 00	12-3
A02E 5607 00	12-27
A02E 5607 00	14-15
A02E 5608 00	12-20
A02E 5608 00	14-26
A02E 5609 00	12-28
A02E 5609 00	14-27
A02E 5610 00	13-15
A02E 5610 00	15-13
A02E 5611 00	12-11
A02E 5611 00	14-12
A02E 5612 00	12-7
A02E 5612 00	14-7
A02E 5613 00	12-18
A02E 5613 00	14-24
A02E 5614 00	12-19
A02E 5614 00	14-25
A02E 5631 00	13-16
A02E 5632 00	13-14
A02E 5635 00	13-13
A02E 5636 00	13-11
A02E 5636 00	15-2
A02E 5691 01	13-1
A02E 5693 01	13-3

Parts No.	Page No.
A02E 5693 01	16-18
A02E 5696 00	13-2
A02E 5721 00	38-6
A02E 5751 03	14-10
A02E 5753 00	14-3
A02E 5754 00	14-28
A02E 5755 01	12-25
A02E 5755 01	14-29
A02E 5771 00	15-14
A02E 5772 00	15-10
A02E 5791 00	14-6
A02E 5804 00	16-19
A02E 5805 00	16-20
A02E 5831 00	38-24
A02E 5841 00	16-15
A02E 5842 01	16-12
A02E 5843 00	15-12
A02E 5871 13	16-1
A02E 5872 00	16-11
A02E 5874 00	16-7
A02E 5875 00	16-5
A02E 5876 00	16-8
A02E 5879 01	16-9
A02E 5880 00	16-13
A02E 5881 00	16-16
A02E 5882 00	16-4
A02E 5901 00	23-17
A02E 5902 00	23-26
A02E 5903 02	21-16
A02E 5905 01	22-18
A02E 5906 00	21-13
A02E 5907 01	21-21
A02E 5908 00	21-11
A02E 5909 01	21-10
A02E 5910 00	21-22
A02E 5911 00	21-6
A02E 5912 00	23-1
A02E 5913 00	23-3
A02E 5915 00	23-25
A02E 5917 00	22-22

Parts No.	Page No.
A02E 5918 01	21-9
A02E 5919 00	22-17
A02E 5921 00	22-12
A02E 5922 00	22-9
A02E 5923 00	22-5
A02E 5924 00	22-3
A02E 5925 00	22-19
A02E 5926 00	22-20
A02E 5927 01	22-21
A02E 5928 01	22-23
A02E 5931 00	22-25
A02E 5932 00	22-8
A02E 5933 00	22-4
A02E 5934 00	22-2
A02E 5935 00	22-15
A02E 5936 00	22-16
A02E 5937 00	22-26
A02E 5941 00	23-2
A02E 5942 00	23-22
A02E 5943 00	23-21
A02E 5945 00	23-19
A02E 5946 00	23-20
A02E 5947 00	24-14
A02E 5951 00	24-8
A02E 5952 01	24-5
A02E 5953 01	24-7
A02E 5953 02	24-7
A02E 5954 00	24-15
A02E 5955 00	23-30
A02E 5956 00	24-1
A02E 5957 00	24-12
A02E 5960 01	24-10
A02E 5960 02	24-10
A02E 5961 00	24-4
A02E 5963 00	24-9
A02E 5966 00	23-29
A02E 5967 00	23-28
A02E 5968 00	23-27
A02E 5971 00	23-11
A02E 5972 00	23-13

Parts No.	Page No.
A02E 5973 01	23-7
A02E 5974 00	23-18
A02E 5975 00	23-24
A02E 5976 00	23-9
A02E 5981 00	22-13
A02E 5982 00	21-18
A02E 5983 00	22-10
A02E 5984 00	21-4
A02E 5985 00	21-2
A02E 5986 00	21-7
A02E 6201 04	17-11
A02E 6202 00	17-9
A02E 6206 00	17-4
A02E 6206 00	19-4
A02E 6207 00	17-8
A02E 6208 01	18-17
A02E 6208 01	20-11
A02E 6209 00	18-8
A02E 6209 00	20-10
A02E 6210 00	18-22
A02E 6210 00	20-16
A02E 6213 00	17-5
A02E 6213 00	19-5
A02E 6214 00	19-12
A02E 6216 00	18-1
A02E 6216 00	20-24
A02E 6218 00	17-3
A02E 6218 00	19-3
A02E 6219 00	17-7
A02E 6219 00	19-7
A02E 6220 00	18-25
A02E 6220 00	20-19
A02E 6223 00	17-17
A02E 6223 00	19-16
A02E 6224 00	18-14
A02E 6224 00	20-8
A02E 6225 01	37-8
A02E 6225 12	37-8
A02E 6226 00	17-20
A02E 6227 00	18-11

Parts No.	Page No.
A02E 6227 00	20-5
A02E 6228 01	37-7
A02E 6228 12	37-7
A02E 6233 00	18-7
A02E 6233 00	20-9
A02E 6234 00	17-19
A02E 6301 03	19-11
A02E 6302 00	19-8
A02E 7001 00	29-9
A02E 7051 01	27-6
A02E 7052 01	27-16
A02E 7053 00	27-8
A02E 7054 00	27-15
A02E 7057 00	29-25
A02E 7058 01	29-27
A02E 7100 00	27-4
A02E 7107 01	27-13
A02E 7109 00	27-3
A02E 7111 00	28-5
A02E 7112 00	28-7
A02E 7113 00	28-1
A02E 7114 00	28-6
A02E 7115 00	28-4
A02E 7117 01	28-8
A02E 7123 00	28-3
A02E 7126 01	29-26
A02E 7128 00	29-1
A02E 7129 00	29-7
A02E 7130 00	29-17
A02E 7132 01	29-35
A02E 7140 00	28-11
A02E 7191 00	27-1
A02E 7192 00	27-2
A02E 8102 02	25-7
A02E 8103 00	25-4
A02E 8104 00	25-1
A02E 8106 00	26-13
A02E 8108 00	25-10
A02E 8110 00	25-2
A02E 8113 00	26-5

Parts No.	Page No.
A02E 8114 00	26-10
A02E 8117 00	26-4
A02E 8118 01	26-9
A02E 8119 00	26-6
A02E 8120 01	26-11
A02E 8121 00	26-7
A02E 8132 00	26-8
A02E 8151 00	25-13
A02E 8152 00	25-16
A02E 8152 00	26-12
A02E 8201 01	25-11
A02E 8202 01	25-15
A02E 8203 01	25-20
A02E 8204 02	25-23
A02E 8205 00	25-17
A02E 8206 01	25-24
A02E 8207 00	25-21
A02E 8208 00	25-22
A02E 8210 00	25-12
A02E 8214 00	25-25
A02E 8902 03	31-14
A02E 8903 00	32-14
A02E 8904 03	31-8
A02E 8905 00	31-11
A02E 8906 00	32-15
A02E 8910 00	32-8
A02E 8913 00	31-13
A02E 8916 00	32-13
A02E 8921 00	31-5
A02E 8922 00	31-3
A02E 8923 00	31-2
A02E 8925 00	31-15
A02E 8930 02	31-1
A02E 8934 00	31-9
A02E 8950 00	32-6
A02E 8951 00	32-7
A02E 8952 00	32-16
A02E 8954 00	32-1
A02E 8956 01	32-4
A02E 8957 01	32-5

Parts No.	Page No.
A02E 9401 00	1-6
A02E 9402 00	3-20
A02E 9403 00	3-19
A02E 9403 00	5-14
A02E 9404 00	1-20
A02E 9405 00	28-9
A02E 9406 00	29-6
A02E 9408 00	22-1
A02E 9409 01	22-1
A02E 9410 00	21-1
A02E 9411 00	21-15
A02E 9412 00	18-24
A02E 9412 00	20-18
A02E 9413 00	17-12
A02E 9415 00	17-13
A02E 9417 00	25-5
A02E 9418 00	37-21
A02E 9419 00	37-22
A02E 9420 00	50-7
A02E 9421 00	50-8
A02E 9430 00	1-15
A02E 9451 00	3-34
A02E F566 00	13-10
A02E F566 00	15-3
A02E G100 00	8-18
A02E G210 00	10-28
A02E G213 00	32-3
A02E G560 00	12-2
A02E G570 00	14-2
A02E G571 00	16-21
A02E G620 00	21-20
A02E G621 00	22-11
A02E G700 00	26-3
A02E H001 06	43-23
A02E H002 01	43-7
A02E H003 00	7-5
A02E H341 06	43-14
A02E H343 00	43-12
A02E M100 00	35-41
A02E M103 00	33-11

Parts No.	Page No.
A02E M108 01	40-2
A02E M10C 01	26-1
A02E M10C 01	32-2
A02E M200 00	16-17
A02E M200 00	29-36
A02E M200 00	35-30
A02E M201 00	24-3
A02E M202 00	12-1
A02E M202 00	14-1
A02E M203 00	34-31
A02E M304 00	5-4
A02E M400 01	40-1
A02E M401 01	40-1
A02E M402 01	39-1
A02E M500 00	29-28
A02E M505 00	29-20
A02E M601 00	3-24
A02E M716 01	1-1
A02E M717 01	1-1
A02E M718 01	1-1
A02E N100 00	44-1
A02E N101 01	21-23
A02E N102 00	48-2
A02E N103 00	22-24
A02E N105 00	12-5
A02E N106 02	14-4
A02E N109 01	31-4
A02E N10A 01	48-1
A02E N10B 00	29-29
A02E N10C 00	38-18
A02E N10D 00	38-23
A02E N10E 00	41-9
A02E N10G 00	11-5
A02E N10J 00	41-1
A02E N10M 01	47-2
A02E N10N 01	3-9
A02E N10P 03	47-1
A02E N10T 01	43-8
A02E N10W 01	1-30
A02E N10W 02	1-30

Parts No.	Page No.
A02E N110 01	37-23
A02E N111 01	42-6
A02E N112 00	45-1
A02E N114 00	6-5
A02E N115 01	44-2
A02E N118 00	43-6
A02E N119 02	3-23
A02E N11A 00	46-1
A02E N120 01	41-12
A02E N121 02	41-11
A02E N122 01	3-7
A02E N123 00	3-27
A02E N124 01	41-11
A02E N125 01	41-6
A02E N130 00	6-9
A02E N131 00	6-7
A02E N132 01	6-8
A02E R700 00	39-3
A02E R701 00	8-1
A02E R703 00	8-19
A02E R704 00	7-7
A02E R705 00	7-13
A02E R706 00	5-1
A02E R707 00	5-5
A02E R708 11	6-1
A02E R709 00	3-3
A02E R710 00	33-13
A02E R711 00	33-12
A02E R712 00	34-33
A02E R713 00	27-17
A02E R714 00	35-11
A02E R715 00	33-10
A02E R716 00	21-24
A02E R717 00	23-10
A02E R718 11	30-1
A02E R720 11	30-1
A02E R721 11	30-1
A02E R722 11	25-26
A02E R727 00	37-4
A02E R729 00	13-4

Parts No.	Page No.
A02E R729 00	15-1
A02E R730 11	6-33
A02E R732 00	39-17
A02E R734 00	17-18
A02E R734 00	19-15
A02E R904 00	12-6
A02E R904 00	14-5
A02E R912 00	49-19
A02E R937 00	49-20
A093 6516 00	49-21
A0DT WY0	11-1
V116 0308 03	50-3
V137 0308 04	50-2
V500 0100 03	49-1
V500 0100 05	49-2
V500 0100 07	49-4
V500 0100 08	49-3
V500 0100 20	49-5
V500 0200 10	49-6
V500 0200 16	49-7
V500 0200 39	49-17
V500 0200 40	50-4
V500 0200 66	49-14
V502 0100 36	43-22
V570 0100 21	49-11
V570 0100 25	49-10
V570 0100 31	49-8
V570 0100 32	49-9
V570 0100 48	49-13
V651 0100 40	3-15
V800 5003 00	29-12
V801 3000 06	22-14
V816 3000 02	3-12
V818 6000 14	35-39
V818 6000 15	40-6
V865 3000 14	43-13

EXTERNAL PARTS

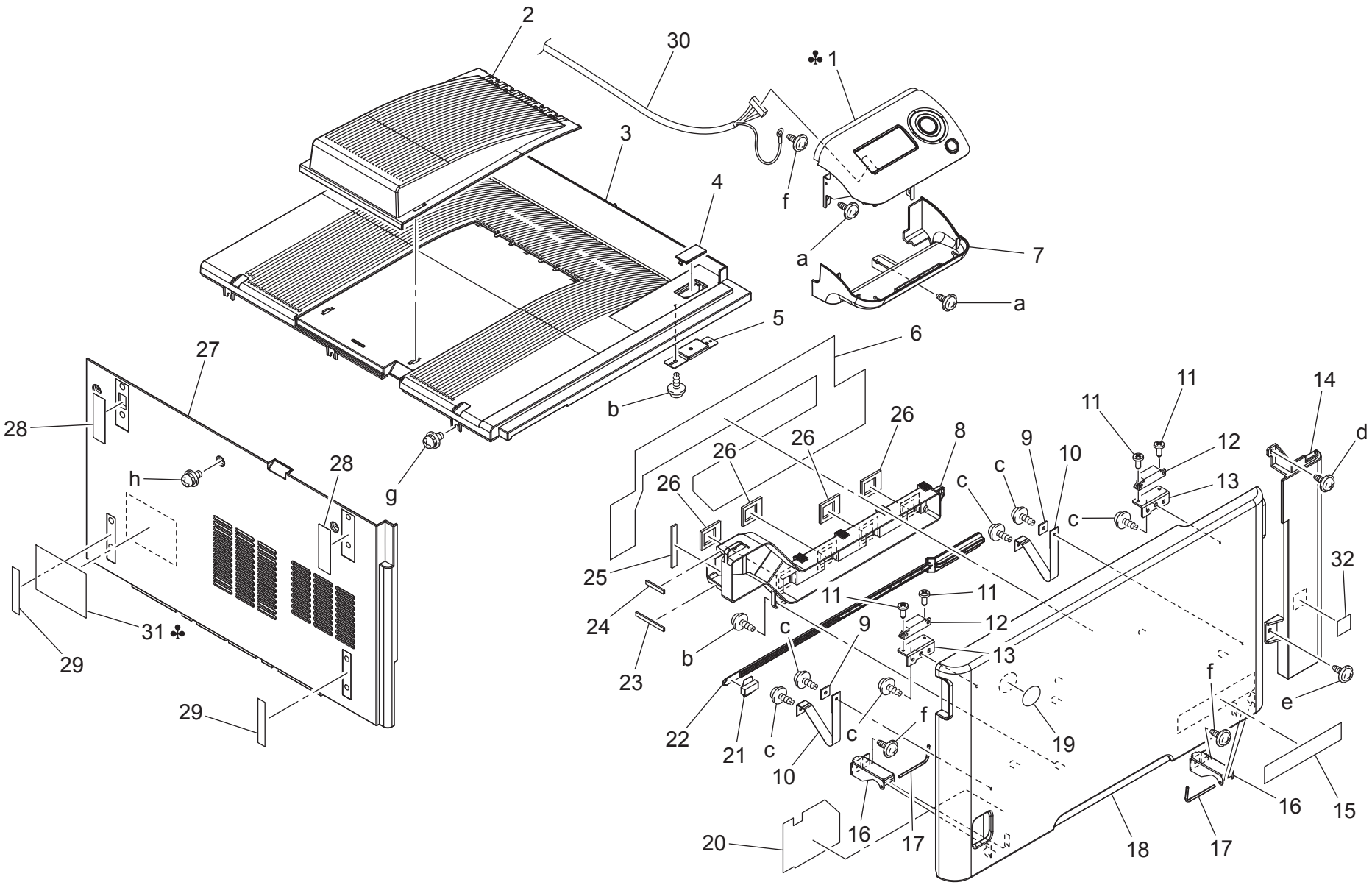

Key	Part No.	Description		Destinations	Class	QTY	Standard parts
1	A02E M716 01	Panel assembly	操作パネル ＡＳＳＹ	A,A1	I	1	a-V137 0308 03
1	A02E M717 01	Panel assembly	操作パネル ＡＳＳＹ	B,G2	I	1	b-V153 0308 04
1	A02E M718 01	Panel assembly	操作パネル ＡＳＳＹ	C	I	1	c-V153 0308 03
2	A02E 1620 00	Tray	トレイ		C	1	d-4154 3804 01
3	A02E 1621 00	Top cover	上カバー（排紙）		C	1	e-V137 0310 04
4	A02E 1637 00	Cover	カバー		C	1	f-V137 0306 03
5	A02E 1615 00	Bracket	取付板（ＪＳ）		D	1	g-V116 0308 03
6	A02E 9401 00	Label Remove/Clean	ラベル　交換／清掃		C	1	h-V116 0308 04
7	A02E 1496 01	Cover	カバー（Ｐ用パネル下・白）		C	1	
8	A02E 1160 00	Duct	ダクト（ＩＵ冷却）		D	1	
9	1053 3103 01	SET PLATE	押え板		C	2	
10	A02E 1612 00	Band	バンド		C	2	
11	4038 1051 01	SCREW	ねじ		C	4	
12	4475 2603 02	MAGNET CATCH	マグネットキャッチ		D	2	
13	4038 1046 01	BRACKET	取付板		D	2	
14	A02E 1623 00	Cover	カバー（ｉｎｆｏ）		C	1	
15	A02E 9430 00	Label bizhub C353P	ラベル　ｂｉｚｈｕｂＣ３５３Ｐ		C	1	
16	A02E 1610 00	Hinge	ヒンジ		C	2	
17	A02E 1613 00	Shaft	シャフト		D	2	
18	A02E 1665 01	Front cover	前カバー（Ｐ版・黒）		C	1	
19	A00J 9455 00	Logo Mark	ロゴマーク		C	1	
20	A02E 9404 00	Label Waste Toner Remove	ラベル　廃トナー交換		C	1	
21	4038 2084 06	CLEANING PAD	クリーニングパッド		C	1	
22	4038 2083 02	CLANING MATERIAL	清掃具		C	1	
23	A02E 1162 00	Seal	シール（ＩＵダクト１）		C	1	
24	A02E 1165 00	Seal	シール（ＩＵダクト４）		C	1	
25	A02E 1163 00	Seal	シール（ＩＵダクト２）		C	1	
26	A02E 1164 00	Seal	シール（ＩＵダクト３）		C	4	
27	A02E 1624 02	Left cover	左カバー（上）		C	1	
28	A02E 1616 00	Seal	シール（目隠し）		C	2	
29	A02E 1611 00	Label Mask	ラベル　目隠し		C	2	
30	A02E N10W 01 Old	Ope.unit Cable /P	操作部ケーブル／Ｐ		D	1	
30	A02E N10W 02	Ope.unit Cable /P	操作部ケーブル／Ｐ		D	1	
31	A00J 9457 00	Label Caution	ラベル　注意	A,A1,B,G2	C	1	
31	A00J 9450 00	Label Only connect	ラベル　アース注意	C	C	1	
32	A011 9462 00	Label Emperon	ラベル　Ｅｍｐｅｒｏｎ		D	1	

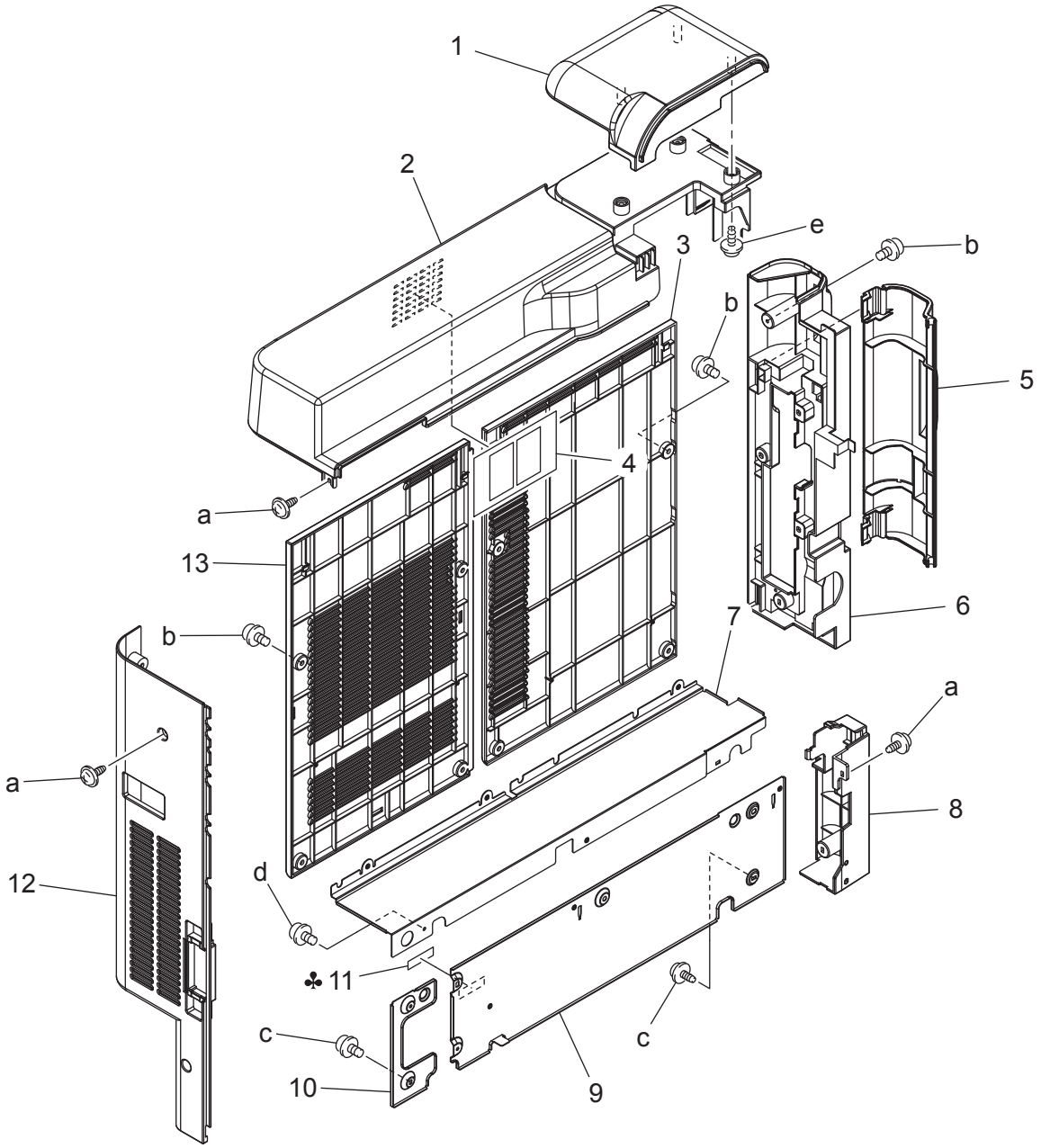
1
2
3
e
b
b
5
4
a
13
b
7
6
a
a
8
12
d
♣ 11
c
10
9
c

Key	Part No.	Description		Destinations	Class	QTY	Standard parts
1	A02E 1666 02	Cover	カバー（後上・白・ｂｉｚ）		C	1	a-V137 0308 04
2	A02E 1662 04	Cover	カバー（後・黒・１Ｐ）		C	1	b-V116 0308 04
3	A02E 1644 00	Cover	カバー（背面ＭＣ）		C	1	c-V116 0306 04
4	A02E 1152 00	Filter	フィルタ（背面吸気上・１Ｐ）		C	1	d-V116 0306 03
5	A02E 1636 01	Cover	カバー（外部端子）		C	1	e-V153 0308 03
6	A02E 1629 00	Cover	カバー（右後）		C	1	
7	A02E 1646 00	Cover	カバー（背面下）		C	1	
8	A02E 1630 00	Cover	カバー（右後下）		C	1	
9	A02E 1632 00	Cover	カバー（後下）		C	1	
10	A02E 1633 00	Cover	カバー（電源コード）		C	1	
11	A00J 9452 01	Label 220-240V 0.65A	ラベル	C	C	1	
12	A02E 1628 00	Cover	カバー（左後）		C	1	
13	A02E 1643 00	Cover	カバー（背面ＭＦＰ）		C	1	

INNER COVER SECTION

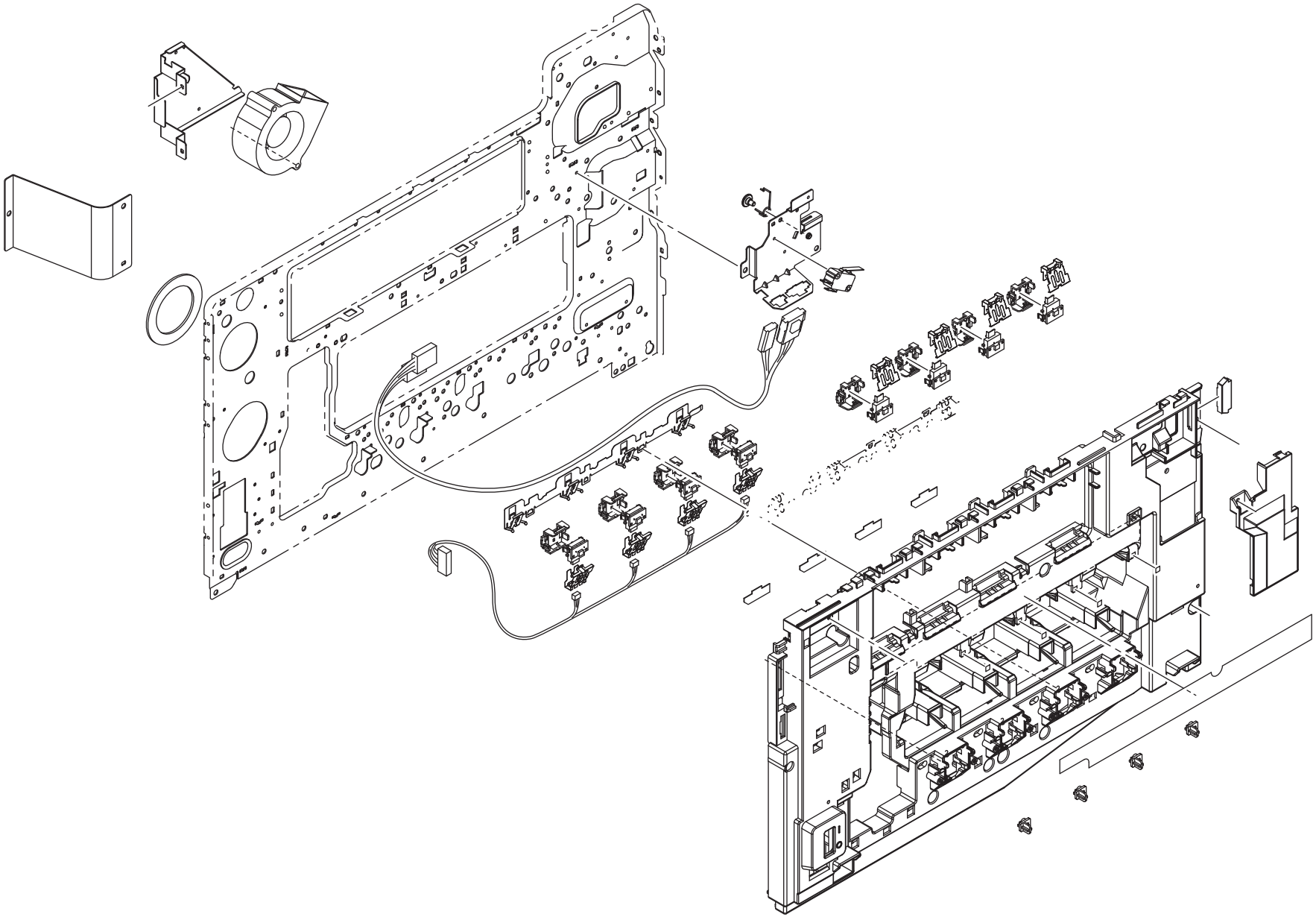

Key	Part No.	Description		Destinations	Class	QTY	Standard parts
1	A02E 1203 01	Bracket	取付板（粉煙排気 ＴＣ 吹付 ＦＡＮ）		D	1	a-V116 0306 03
2	9313 1300 51	FAN MOTOR	ファンモータ		B	1	b-V116 0335 03
3	A02E R709 00	Front Cover Switch Assy	前扉 ＳＷ ＡＳＳＹ		C	1	c-V137 0306 03
4	A02E 1381 00	Bracket	取付板（定着ヒータ ＣＮ）		D	1	d-V116 0316 03
5	4038 2287 02	SHOULDER SCREW	段ねじ		C	1	e-V116 0308 03
6	A02E 1384 00	Torsion spring	ねじりコイルばね		C	1	f-V153 0308 03
7	A02E N122 01	Heater Relay harness	ヒーター中継束線		D	1	g-V137 0312 03
8	9J06 M601 00	MICRO SWITCH	マイクロスイッチ		C	1	h-V153 0306 04
9	A02E N10N 01	Supply Detection harness	補給検知束線		D	1	k-V116 0335 03
10	4038 2281 04	HOLDER	ホルダ		C	8	m-4106 2063 01
11	4038 2282 03	PLATE SPRING	板ばね		C	8	n-V116 0308 04
12	V816 3000 02	CONNECTOR PIN	基板用コネクタポスト		D	8	p-V116 0406 03
13	9J06 2460 01	COVER	カバー		C	4	
14	4038 2283 02	PLATE SPRING	板ばね		C	2	
15	V651 0100 40	CONNECTOR	角型プラグコネクタ		D	1	
16	A02E 1702 00	Cover	カバー（定着）		C	1	
17	A02E 1614 01	Suction plate	吸着板（右）		D	1	
18	A02E 1618 00	Spacer	スペーサ（吸着板）		C	2	
19	A02E 9403 00	Label Iu	ラベル ＩＵ 挿入目標		C	4	
20	A02E 9402 00	Label Tc/Iu	ラベル ＴＣ ／ ＩＵ 挿入目標		D	1	
21	A02E 1703 00	Holder	ホルダ（ＩＵ 非互換）		D	4	
22	4038 1014 01	SUCTION PLATE	吸着板		D	1	
23	A02E N119 02	Photoconductor Detection harness	感光体検知束線		D	1	
24	A02E M601 00	Power source Switch	電源スイッチ		C	1	
25	A02E 1383 00	Bracket	取付板（電源 ＳＷ）		D	1	
26	9313 1000 72	FAN MOTOR	ファンモータ		C	1	
27	A02E N123 00	AC Power source harness	ＡＣ 電源束線		D	1	
28	A02E 1161 02	Duct	ダクト（機内冷却・前）		D	1	
29	A02E 1167 00	Seal	シール（機内冷却・前）		C	1	
30	A02E 1166 00	Heat sink	放熱板		D	1	
31	A02E 1205 00	Seal	シール（紛煙ダクト２）		C	2	
32	A02E 1701 00	Cover	カバー（２次）		D	1	
33	A02E 1050 00	Cover	カバー（１次保護）		D	1	
34	A02E 9451 00	Label	ラベル（ＴＣ 名称１）		C	1	

T/C RAIL SECTION

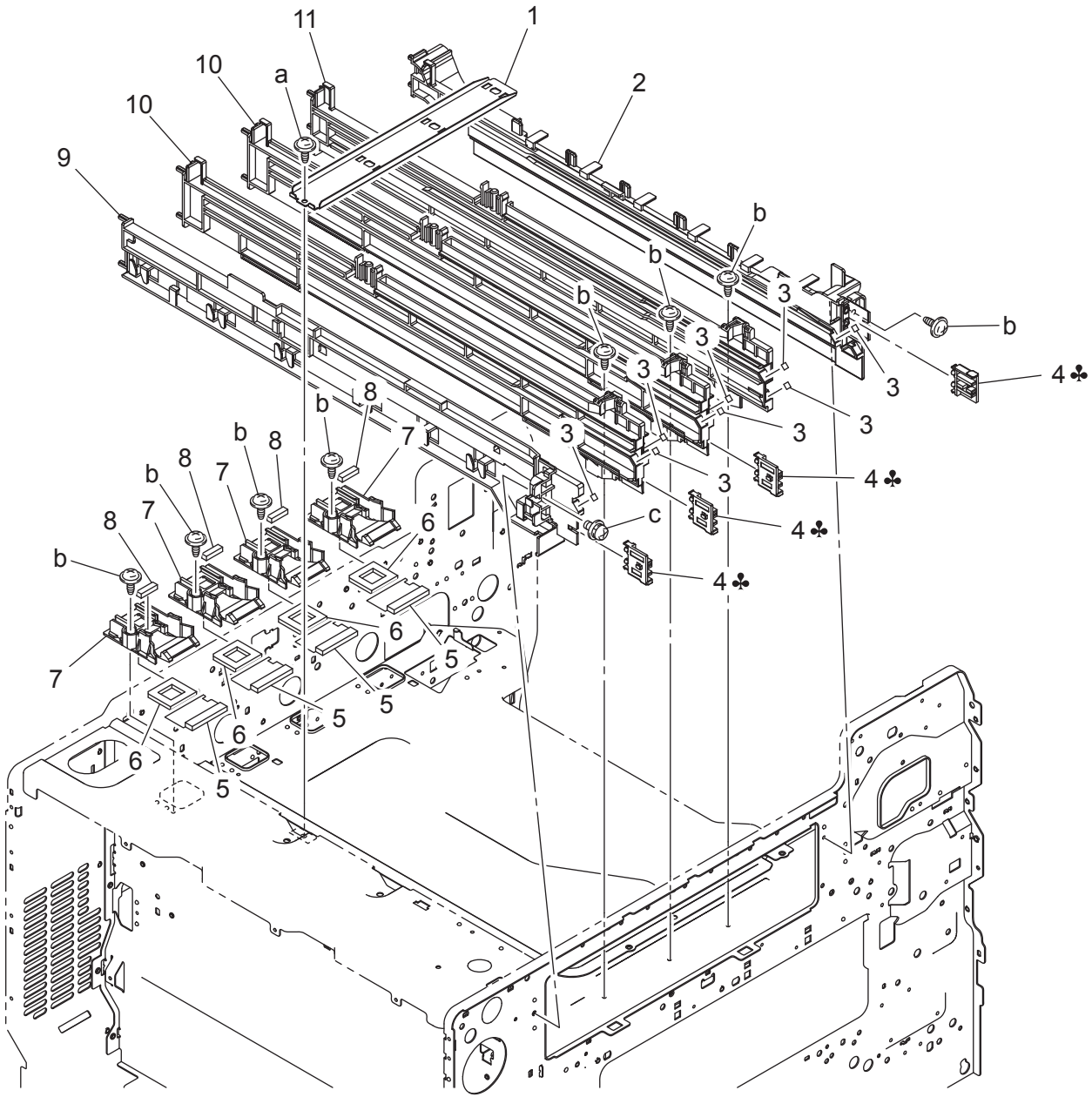

Key	Part No.	Description		Destinations	Class	QTY	Standard parts
1	4038 2038 02	SET PLATE	押え板		D	1	a-V137 0306 03
2	A02E 1019 02	Rail	レール（Ｔ／Ｃ・Ａ）		D	1	b-V137 0308 03
3	4038 7316 01	LABEL	ラベル		D	8	c-V116 0308 03
4	A02E 1060 01	Claw	爪（本体・ＴＡ １）	A,A1	D	4	
4	A02E 1061 01	Claw	爪（本体・ＴＡ ２）	C	D	4	
4	A02E 1062 01	Claw	爪（本体・ＴＡ ３）	B,G2	D	4	
5	A02E 3662 01	Seal	シール（トナー受け）		C	4	
6	A02E 3661 00	Seal	シール（ガイド）		C	4	
7	A02E 3660 01	Guide	ガイド（Ｔ／Ｃ シャッタ）		D	4	
8	4038 2110 03	SEAL	シール		C	4	
9	A02E 1022 00	Rail	レール（Ｔ／Ｃ・Ｄ）		D	1	
10	A02E 1023 01	Rail	レール（Ｔ／Ｃ・Ｃ）		D	2	
11	A02E 1024 01	Rail	レール（Ｔ／Ｃ・Ｂ）		D	1	

ERASE LAMP SECTION

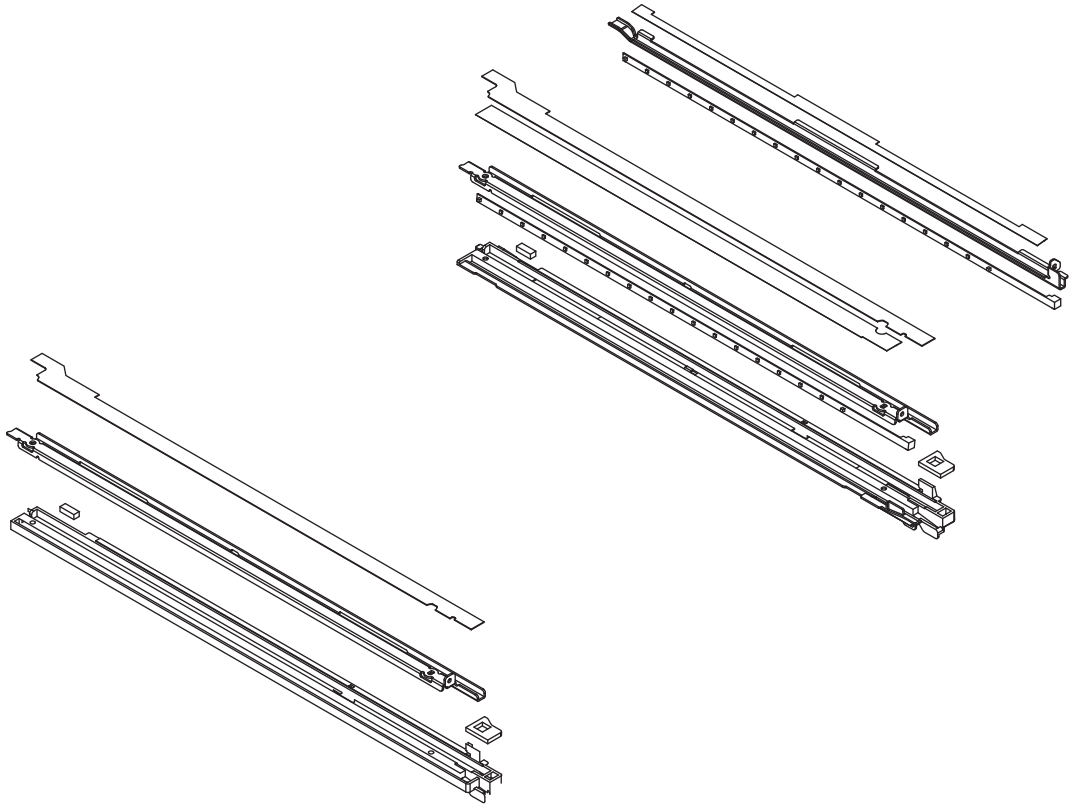

Key	Part No.	Description		Destinations	Class	QTY	Standard parts
1	A02E R706 00	Eraser Assy Black	イレーサー ＡＳＳＹ　Ｋ		C	1	a-V145 0308 03
2	A02E 1033 11	Bracket	取付板（イレーサ）		D	1	b-V217 0300 01
3	A02E 1053 11	Shield plate	遮光材（Ｋ）		C	1	c-V137 0306 03
4	A02E M304 00	LED array	ＬＥＤ アレイ		C	4	
5	A02E R707 00	Eraser Assy YMC	イレーサー ＡＳＳＹ　ＹＭＣ		C	3	
6	A02E 1054 00	Cover	カバー（トナー吸引）		C	4	
7	A02E 1051 00	Shield plate	遮光材（３ Ｃ）		C	3	
8	A02E 1035 00	Reinforce plate	補強板		D	3	
9	9J06 2472 00	SEAL	シール（補強板）		C	4	
10	A02E 1034 00	Rail	レール（ＩＵ）		D	3	
11	9J06 2461 01	SEAL	シール		C	4	
12	A02E 1035 00	Reinforce plate	補強板		D	1	
13	A02E 1037 00	Rail	レール（ＩＵ）		D	1	
14	A02E 9403 00	Label Iu	ラベル　ＩＵ 挿入目標		C	4	
15	4038 2072 04	PLATE SPRING	板ばね（前 Ｖ 字）		C	4	
16	4038 2069 01	SLIDER	すべり材		C	4	
17	A02E 1204 00	Seal	シール（紛煙ダクト１）		C	1	

TRANSFER BELT UNIT

改訂版 REVISED EDITION	日付 DATE
1	JUNE 2008

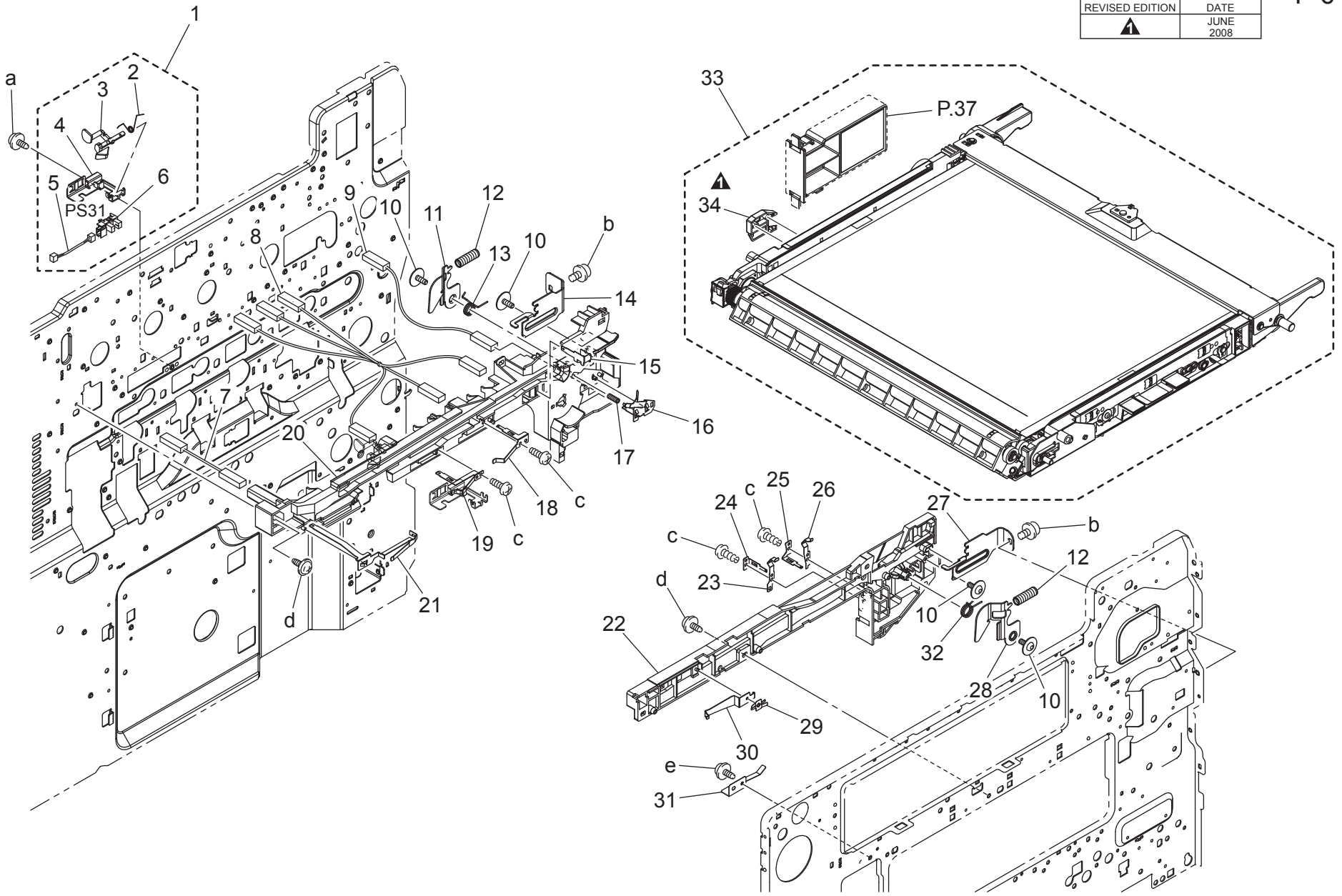

Key	Part No.	Description		Destinations	Class	QTY	Standard parts
1	A02E R708 11	Transfer Detection Assy	転写離間検出 ＡＳＳＹ		C	1	a-V137 0306 03
2	A02E 1123 00	Torsion spring	ねじりコイルばね		C	1	b-V116 0408 03
3	A02E 1122 12	Actuator	アクチュエータ		C	1	c-V145 0308 03
4	A02E 1121 11	Bracket	取付板		D	1	d-4154 3804 01
5	A02E N114 00	Connecting Detection harness	連結検知束線		D	1	e-4106 2063 01
6	9335 1300 61	PHOTO INTERRUPTER	フォトインタラプタ		B	1	
7	A02E N131 00	Transfer Wiring /14	転写束線／１４		D	1	
8	A02E N132 01	Transfer Wiring /13	転写束線／１３		D	1	
9	A02E N130 00	Transfer Wiring /2	転写束線／２		D	1	
10	4163 5293 01	SCREW	ねじ		C	4	
11	4038 2027 01	ARM	アーム		C	1	
12	4038 2029 01	PRESSURE SPRING	圧縮コイルばね		C	2	
13	4038 2028 01	TORSION SPRING	ねじりコイルばね		C	1	
14	4038 2026 01	LEVER	レバー		C	1	
15	A02E 1103 00	Contact	接点（一次転写　Ｂｋ）		C	1	
16	4038 2205 02	CONTACT	接点		C	1	
17	4038 2207 01	PRESSURE SPRING	圧縮コイルばね		C	1	
18	A02E 1104 00	Contact	接点（一次転写　Ｃ）		C	1	
19	A02E 1105 00	Contact	接点（一次転写　Ｍ）		C	1	
20	A02E 1102 00	Rail	レール（中転・Ｒ）		D	1	
21	A02E 1107 00	Contact	接点（一次転写）		C	1	
22	A02E 1101 00	Rail	レール（中転・Ｆ）		D	1	
23	4038 2152 13	CONTACT	接点（新品検知３）		C	1	
24	4038 2077 13	CONTACT	接点（新品検知１）		C	1	
25	4038 2078 13	CONTACT	接点（新品検知２）		C	1	
26	4038 2153 13	CONTACT	接点（新品検知４）		C	1	
27	4038 2046 01	LEVER	レバー		C	1	
28	4038 2047 02	ARM	アーム		C	1	
29	4038 2080 01	CONTACT	接点		C	1	
30	4038 2045 01	PLATE SPRING	板ばね		D	1	
31	A02E 1108 00	Contact	接点		C	1	
32	4038 2048 01	TORSION SPRING	ねじりコイルばね		C	1	
33	A02E R730 11	Transfer Belt Kit	転写ベルトキット		A	1	
34	A02E 5033 01	Detecting Plate	検出板		D	1	

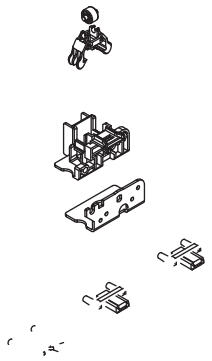

Key	Part No.	Description		Destinations	Class	QTY	Standard parts
1	4038 2051 01	SEAL	シール		C	4	a-V137 0308 03
2	A02E 1179 00	Seal	シール（オゾンダクト５）		C	4	b-V153 0308 03
3	9J06 2086 01	PLATE SPRING	板ばね		D	4	c-4154 3804 01
4	A02E 1055 00	Holder	ホルダ（ダクト Ｒ）		D	4	
5	A02E H003 00	PWB assembly (PWB-PH ASSY)	基板 ＡＳＳＹ		I	1	
6	A02E 1330 00	Holder	ホルダ（ＰＨ 中継基板）		D	1	
7	A02E R704 00	PU Lifting Plate Assy	ＰＵ 押上 ＡＳＳＹ		C	4	
8	4038 2094 01	ROLL	ころ		C	4	
9	4038 2016 02	LIFTING PLATE	押上板		D	4	
10	A02E 1058 00	Pressure spring	圧縮コイルばね		C	4	
11	4038 2018 03	HOLDER	ホルダ		D	4	
12	4038 2061 01	BRACKET	取付板		D	4	
13	A02E R705 00	ATDC Connector Assy	ＡＴＤＣ ドロア ＡＳＳＹ		C	4	

PRINT HEAD SECTION

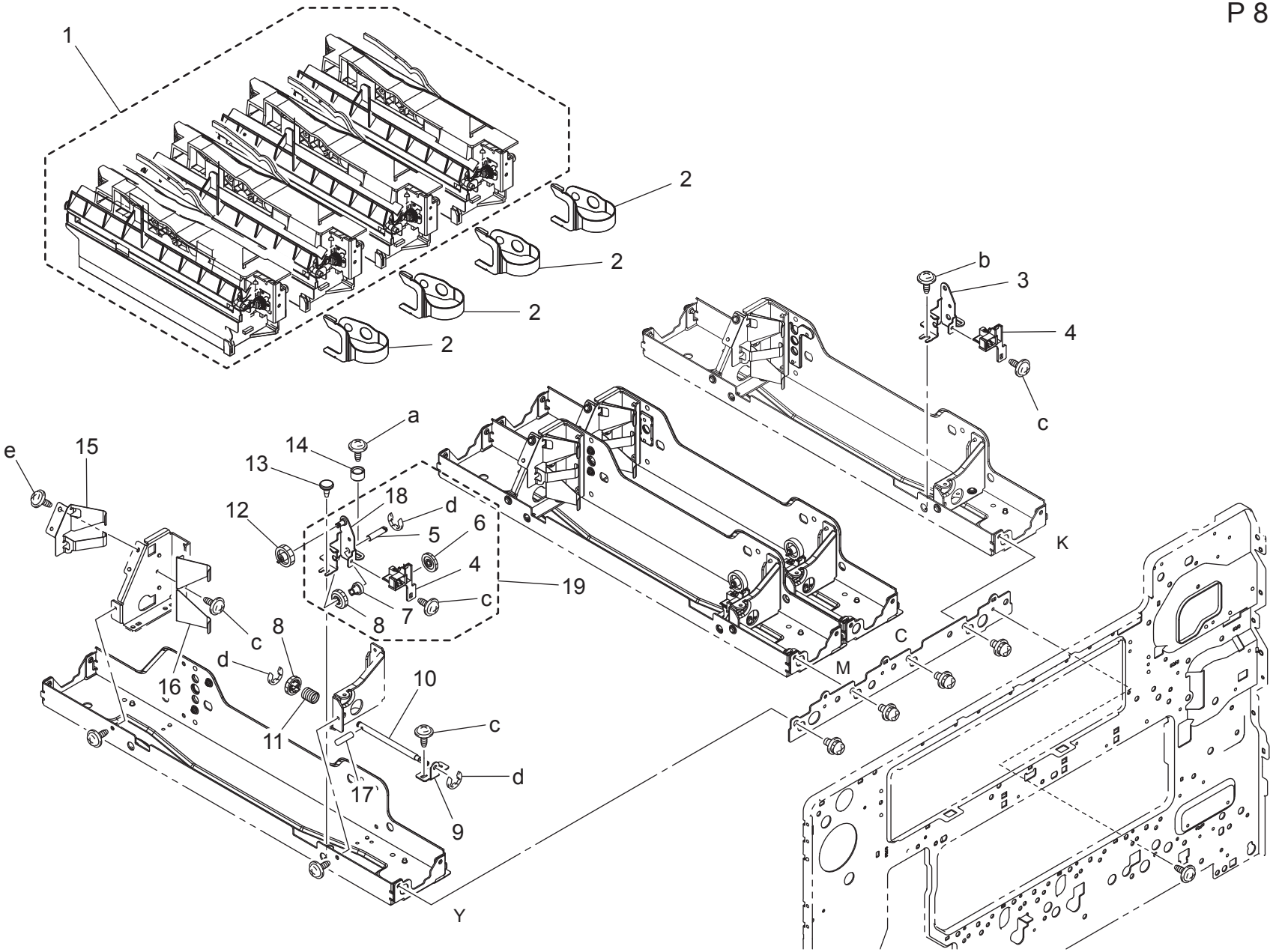

Key	Part No.	Description		Destinations	Class	QTY	Standard parts
1	A02E R701 00	Print Head Assy	Ｐ／Ｈ　ＡＳＳＹ		I	1	a-4154 3804 01
2	4038 1906 04	PLATE SPRING	板ばね		C	4	b-4106 2063 01
3	A02E 1048 00	Bracket	取付板		D	1	c-V137 0306 03
4	4038 2187 04	GUIDE	ガイド		D	4	d-V217 0300 01
5	4038 2192 02	SHAFT	シャフト		D	3	e-V137 0308 03
6	4038 2189 01	GEAR 27T	ギヤ　２７Ｔ		C	3	
7	4038 2190 03	GEAR 16T	ギヤ　１６Ｔ		C	3	
8	4038 2191 02	GEAR 16T	ギヤ　１６Ｔ		C	6	
9	4038 2194 01	BRACKET	取付板		D	3	
10	4038 2193 03	SHAFT	シャフト		D	3	
11	4038 2196 01	PRESSURE SPRING	圧縮コイルばね		C	3	
12	4038 2188 02	GEAR 30T	ギヤ　３０Ｔ		C	3	
13	4038 2184 01	SHOULDER SCREW	段ねじ		C	3	
14	4038 2179 01	WASHER	ワッシャ		C	3	
15	4038 2180 01	CONTACT	接点		D	4	
16	4038 2042 01	SPRING	ばね		D	4	
17	1067 2501 01	PIN	ヒ゜ン		C	3	
18	A02E G100 00	Mounting Plate	取付板		D	3	
19	A02E R703 00	Skew Adjustment Assy	スキュー調整 ＡＳＳＹ		C	3	

TONER CONVEYANCE SECTION

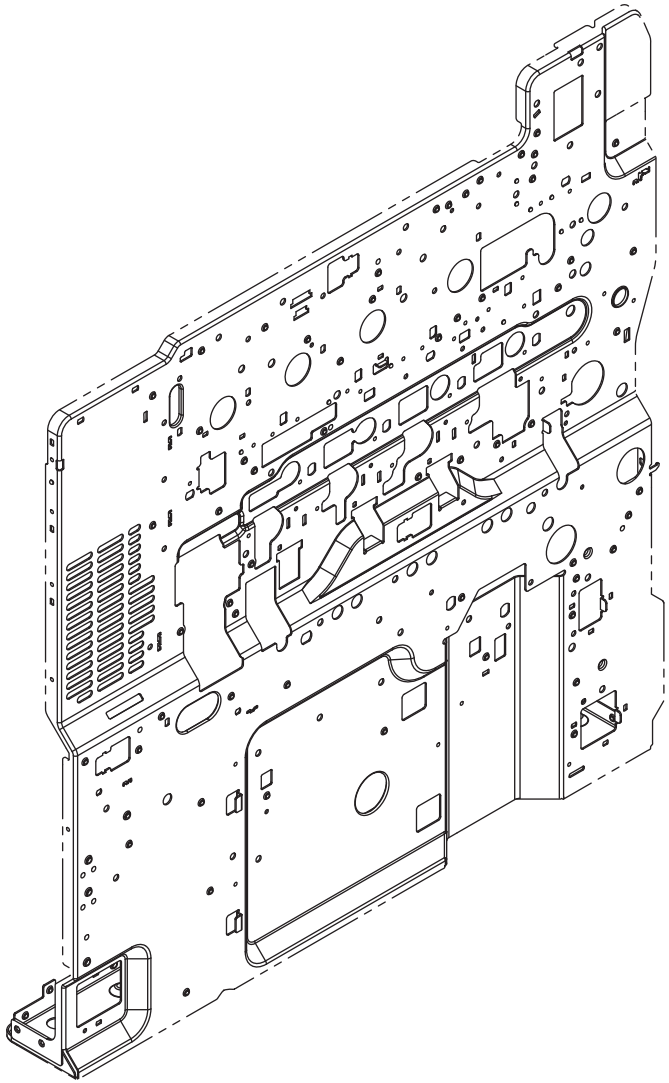

Key	Part No.	Description		Destinations	Class	QTY	Standard parts
1	A02E 3676 00	Gear 15T	ギヤ　１５Ｔ		C	4	a-V165 0205 04
2	A02E 3677 00	Gear 14T	ギヤ　１４Ｔ		C	4	b-V217 0300 01
3	A02E 3682 01	BUSHING	軸受		C	4	c-V137 0308 03
4	A02E 3687 00	Washer	ワッシャ		C	4	d-V116 0316 03
5	A02E 3674 01	Screw	搬送羽根（Ｋ）		D	1	e-V153 0308 03
6	A02E 3684 00	Seal	シール（搬送管）		C	4	f-V218 0250 86
7	A02E 3673 00	Transport Pipe K	搬送管（Ｋ）		D	1	
8	A02E 3681 00	Torsion spring	ねじりコイルばね		C	4	
9	A02E 3679 01	Seal	シール		C	4	
10	A02E 1047 00	Insulating member	絶縁材		C	1	
11	4038 2056 02	SEAL	シール		C	1	
12	4038 2052 02	DUCT	ダクト		D	1	
13	4038 2053 02	SEAL	シール		C	1	
14	A02E 3603 00	Shutter	シャッタ（現像）		C	4	
15	A02E 3604 00	Seal	シール（現像）		C	4	
16	A02E 3602 00	Torsion spring	ねじりコイルばね		C	4	
17	A02E 3601 01	Pipe	パイプ（Ｃ）		D	4	
18	A02E 3671 01	Screw	搬送羽根（Ｃ）		D	3	
19	A02E 3670 00	Transport Pipe CMY	搬送管（ＣＭＹ）		D	3	
20	A02E 3637 00	Gear 18T	ギヤ　１８Ｔ		C	1	
21	A02E 3683 00	Bushing	すべり軸受		C	1	
22	A02E 3678 00	Pin	ピン		C	4	
23	A02E 3680 00	Shaft	シャフト		D	1	

TONER CONVEYANCE SECTION

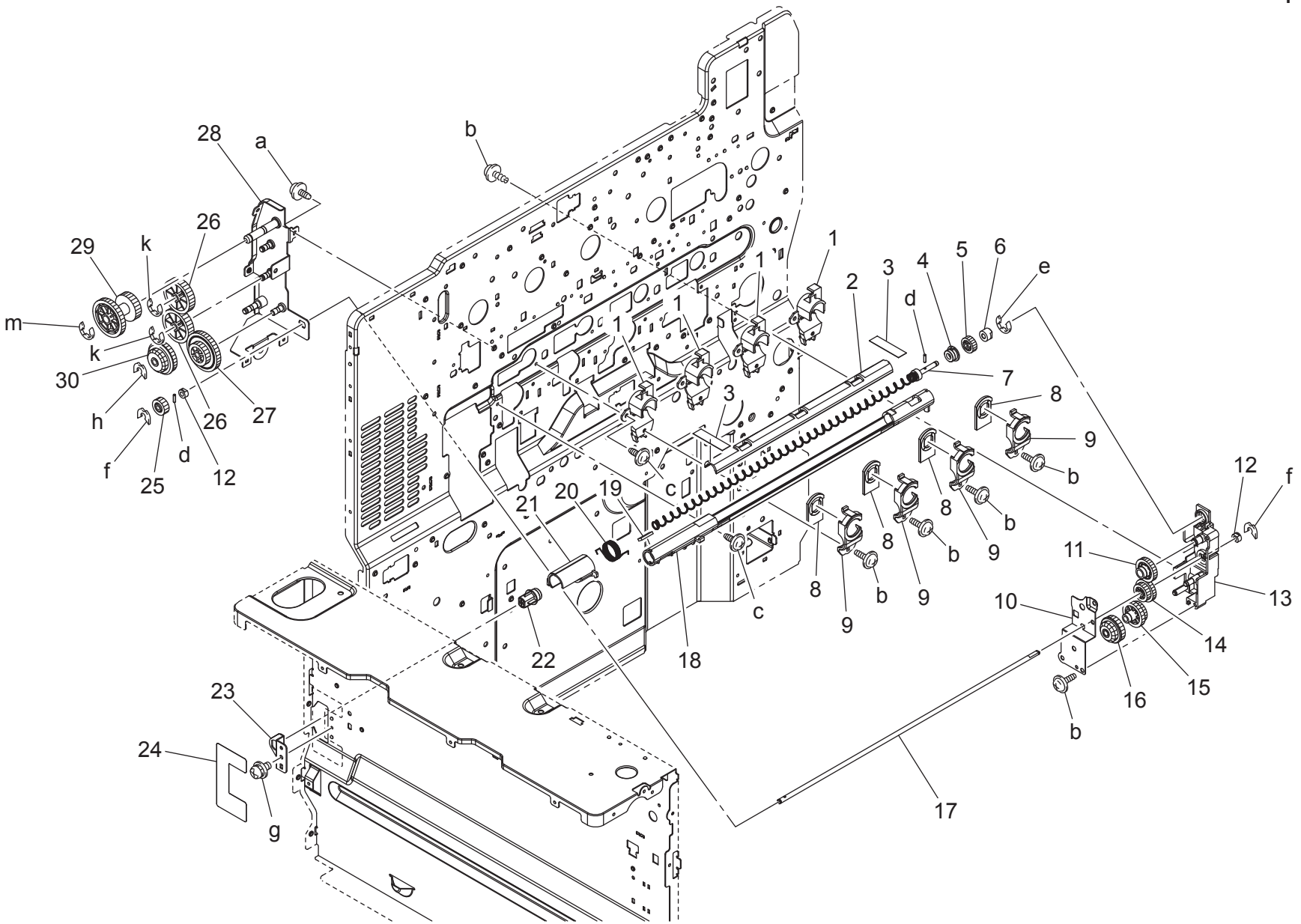

Key	Part No.	Description		Destinations	Class	QTY	Standard parts
1	A02E 3616 01	Holder	ホルダ（廃トナーパイプ）		D	4	a-V137 0306 03
2	A02E 3615 00	Cover	蓋		D	1	b-V153 0308 03
3	A02E 3619 00	Seal	シール（廃トナーパイプ）		C	2	c-V137 0308 03
4	A02E 3614 00	Bushing	すべり軸受（廃トナー搬送）		C	1	d-V231 2008 50
5	A02E 3626 00	Gear 22T	ギヤ　２２Ｔ		C	1	e-V217 0300 01
6	A02E 3625 00	Bushing	すべり軸受		C	1	f-V218 0250 86
7	A02E 3613 00	Coil	コイル（廃トナー）		C	1	g-V116 0306 03
8	A02E 3617 00	Seal	シール（クリーナー）		C	4	h-V218 0300 86
9	A02E 3618 00	Guide	ガイド（クリーナー）		D	4	k-V217 0400 01
10	A02E 2452 01	Hold plate	保持板（廃トナー）		D	1	m-V217 0600 01
11	A02E 2451 00	Gear 35T	ギヤ　３５Ｔ		C	1	
12	4004 5339 01	BUSHING	軸受		C	2	
13	A02E 2586 01	Holder	ホルダ（廃トナー駆動）		D	1	
14	A02E 2450 00	Gear 26/34T	ギヤ　２６／３４Ｔ		C	1	
15	A02E 2579 00	Gear 30/30T	ギヤ　３０／３０Ｔ		C	1	
16	4004 2545 01	GEAR 18/30T	ギヤ　１８／３０Ｔ		C	1	
17	A02E 2453 02	Shaft	シャフト（廃トナー）		D	1	
18	A02E 3611 01	Pipe	パイプ（廃トナー搬送）		D	1	
19	4038 2143 01	SEAL	シール		C	1	
20	4038 2114 01	TORSION SPRING	ねじりコイルばね		C	1	
21	A02E 3628 00	Shutter	シャッタ（廃トナー）		D	1	
22	A02E 3631 00	Cap	キャップ		D	1	
23	A02E 3634 00	Bracket	取付板		D	1	
24	A02E 1481 00	Seal	シール（左フレーム）		C	1	
25	A02E 3627 00	Gear 18T	ギヤ　１８Ｔ		C	1	
26	A02E 3635 00	Gear 41T	ギヤ　４１Ｔ		C	2	
27	A02E 3622 00	Gear 27/48T	ギヤ　２７／４８Ｔ		C	1	
28	A02E G210 00	Caulking (Drive)	駆動カシメＡｓｓｙ		D	1	
29	A02E 3636 00	Gear 32/43T	ギヤ　３２／４３Ｔ		C	1	
30	A02E 3630 00	Gear 22/37T	ギヤ　２２／３７Ｔ		C	1	

TONER COLLECTING SECTION

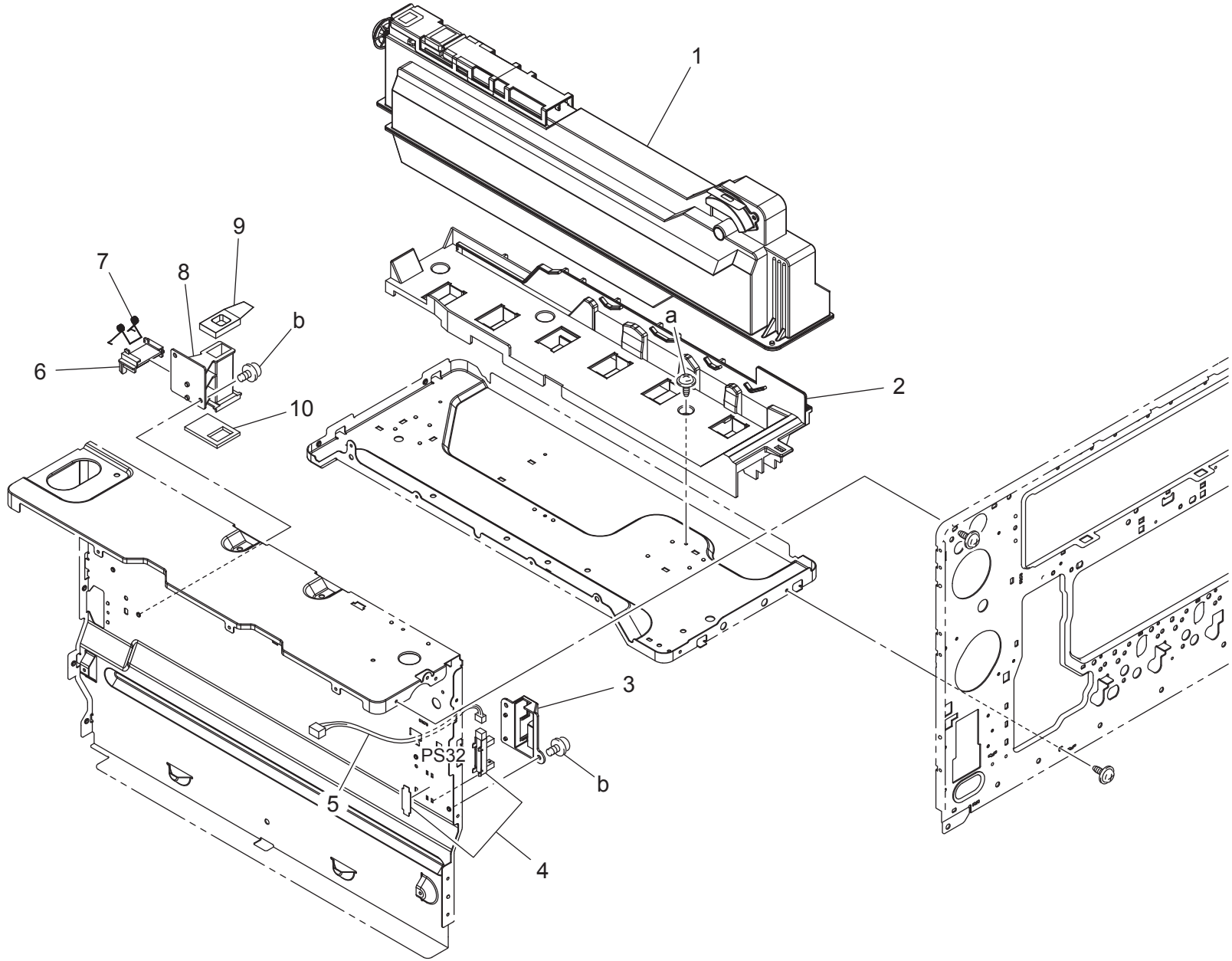

Key	Part No.	Description		Destinations	Class	QTY	Standard parts
1	A0DT WY0	Waste Toner Box	廃棄トナーボックス		A	1	a-4154 3804 01 b-V116 0308 03
2	A02E 3650 01	Rail	レール（廃トナー）		D	1	
3	A02E 3651 00	Cover	カバー（廃トナーセンサ）		D	1	
4	4037 0901 01	PHOTO INTERRUPTER	フォトインタラプター		B	1	
5	A02E N10G 00	Sensor Wiring /3	センサ束線／３		D	1	
6	A02E 3641 01	Shutter	シャッタ		C	1	
7	A02E 3644 01	Torsion spring	ねじりコイルばね		C	1	
8	A02E 3640 01	Pipe	パイプ		D	1	
9	A02E 3643 00	Seal	シール		C	1	
10	A02E 3642 01	Seal	シール		C	1	

1ST PAPER FEED SECTION

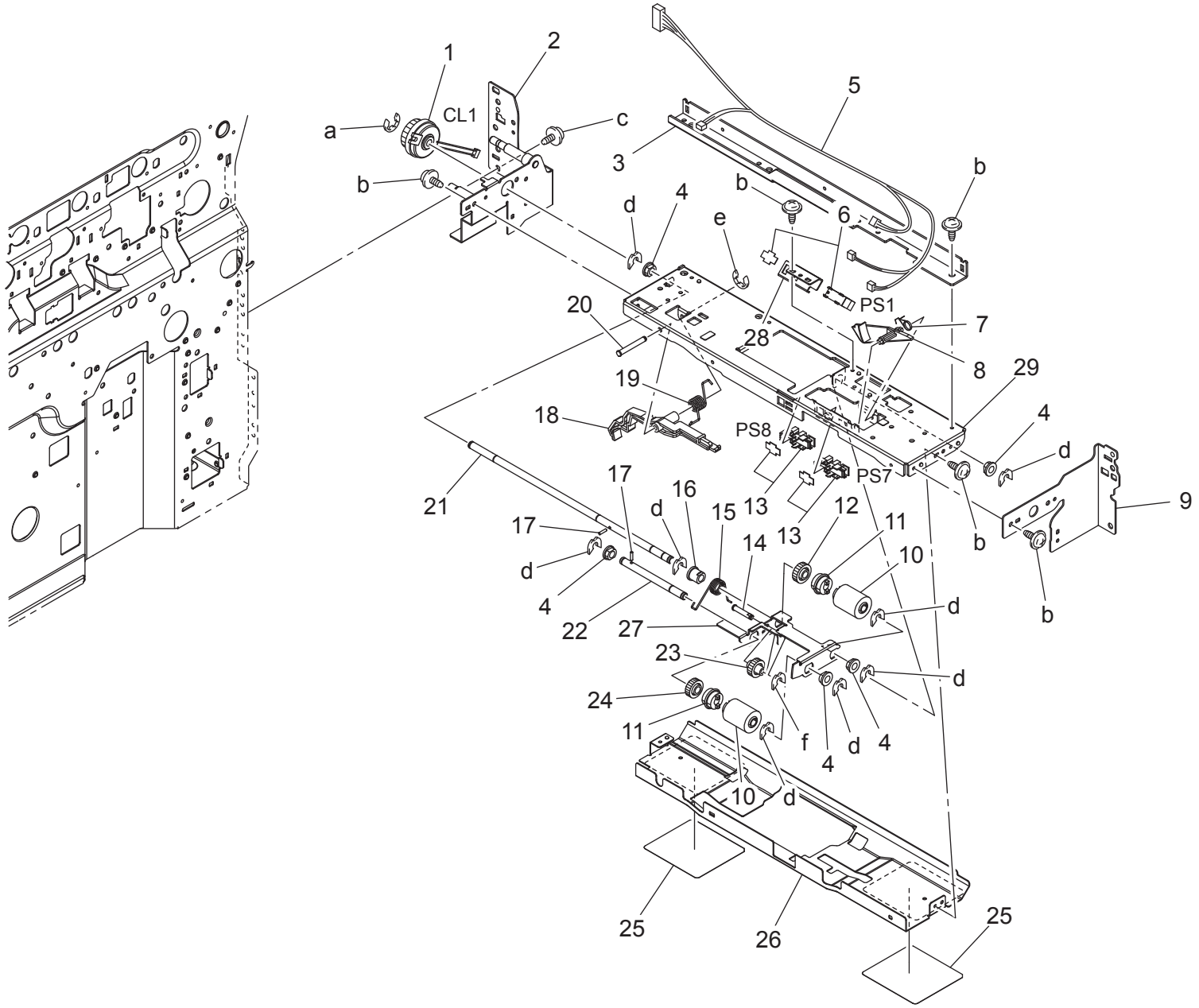

Key	Part No.	Description		Destinations	Class	QTY	Standard parts
1	A02E M202 00	Clutch	クラッチ		C	1	a-V217 0400 01
2	A02E G560 00	Caulking Rear Frame/Paper Feed	フレーム後／給紙１カシメ Ａｓｓｙ		D	1	b-V137 0306 03
3	A02E 5606 00	Bracket	取付板		D	1	c-V137 0408 03
4	4131 3003 01	BUSHING	軸受		C	5	d-V218 0400 86
5	A02E N105 00	Conveyance Wiring /1	搬送束線／１		D	1	e-V217 0300 01
6	A02E R904 00	Photo Interrupter	フォトインタラプタ		I	1	f-V218 0300 86
7	A02E 5612 00	Torsion spring	ねじりコイルばね		C	1	
8	4030 3016 12	ACTUATOR	アクチュエータ		C	1	
9	A02E 5601 01	Frame	フレーム（前）		D	1	
10	A00J 5636 00	Roller	ローラ		A	2	
11	A02E 5611 00	Clutch	クラッチ		C	2	
12	4425 3013 01	GEAR 30T	ギヤ ３０Ｔ		C	1	
13	4037 0906 01	PHOTO INTERRUPTER	フォトインタラプター		B	2	
14	4040 3097 01	SHAFT	シャフト		D	1	
15	4030 3030 01	TORSION SPRING	ねじりコイルばね		C	1	
16	1065 3086 01	BUSHING	シ゛クウケ		C	1	
17	1067 2501 01	PIN	ヒ゜ン		C	2	
18	A02E 5613 00	Lever	レバー（ピック解除）		C	1	
19	A02E 5614 00	Torsion spring	ねじりコイルばね（ピック解除）		C	1	
20	A02E 5608 00	Shaft	シャフト		D	1	
21	A02E 5605 00	Shaft	シャフト（給紙）		D	1	
22	4030 3003 01	SHAFT	シャフト		D	1	
23	4030 3008 01	GEAR 29T	ギヤ ２９Ｔ		C	1	
24	4425 3016 01	GEAR 32T	ギヤ ３２Ｔ		C	1	
25	A02E 5755 01	Guide	ガイド（給紙下）		C	2	
26	A02E 5604 00	Guide plate	ガイド板（給紙）		C	1	
27	A02E 5607 00	Holder	ホルダ（給紙）		D	1	
28	A02E 5609 00	Bracket	取付板（給紙用反射センサ）		D	1	
29	A02E 5603 00	Frame	フレーム（給紙・上）		D	1	

1ST PAPER FEED SECTION

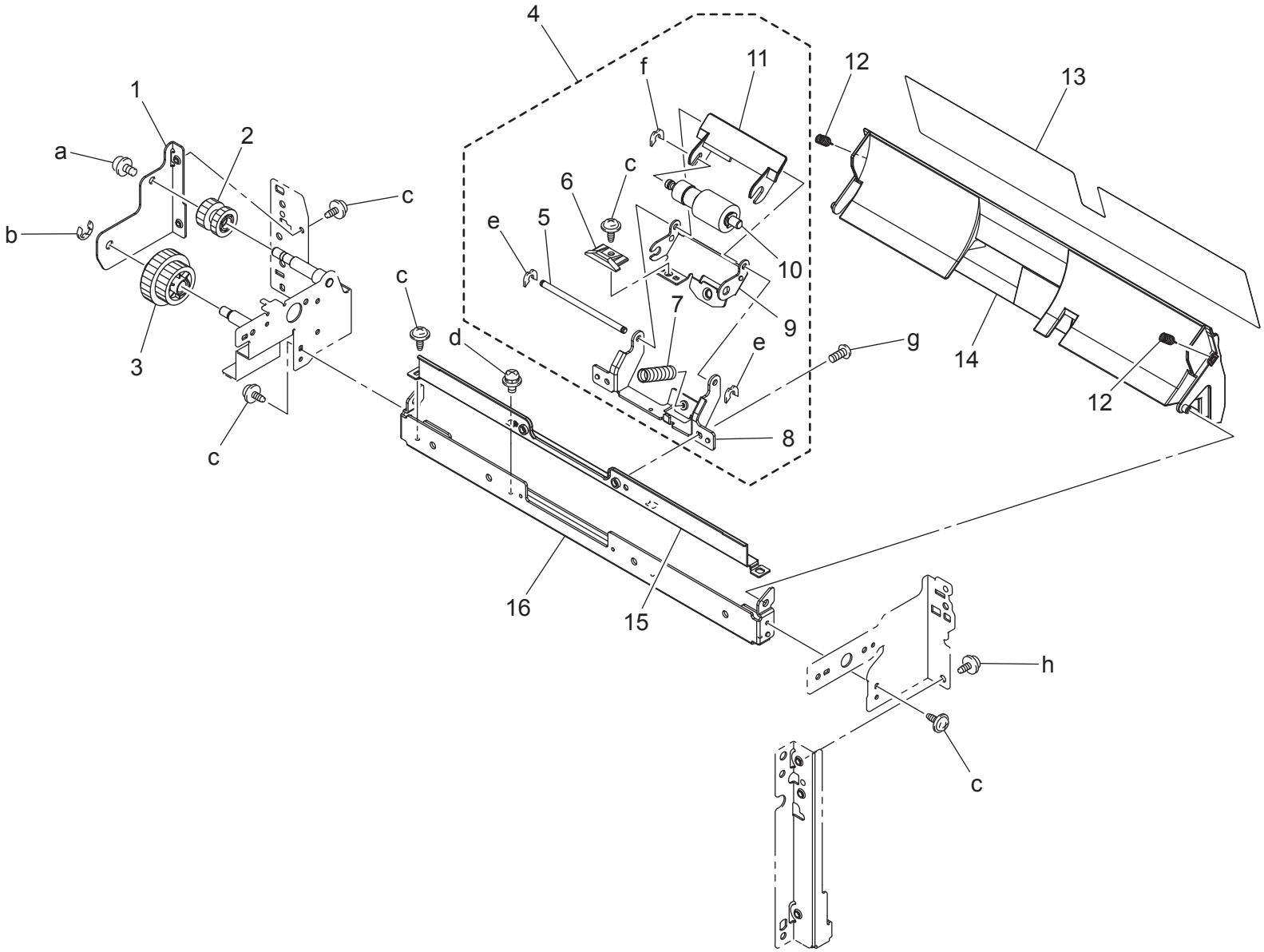

Key	Part No.	Description		Destinations	Class	QTY	Standard parts
1	A02E 5691 01	Bracket	取付板（駆動補強）		D	1	a-V116 0306 03
2	A02E 5696 00	Gear 18T	ギヤ　１８Ｔ		C	1	b-V217 0400 01
3	A02E 5693 01	Gear 26/34T	ギヤ　２６／３４Ｔ		C	1	c-V137 0306 03
4	A02E R729 00	Separation Roller Assy	分離ローラ ＡＳＳＹ		C	1	d-V116 0308 03
5	4030 3039 01	SHAFT	シャフト		D	1	e-V218 0300 86
6	4030 3078 01	LEVER	レバー		C	1	f-V218 0400 86
7	4030 3017 03	PRESSURE SPRING	圧縮コイルばね		C	1	g-V136 0308 03
8	4030 3014 01	BRACKET	取付板		D	1	h-V137 0408 03
9	4030 3013 01	HOLDER	ホルダ		D	1	
10	A02E F566 00	Separation Roller Assy	分離ローラー Ａｓｓｙ		A	1	
11	A02E 5636 00	Guide	ガイド（さばき後）		D	1	
12	4030 3125 01	TENSION SPRING	引張コイルばね		C	2	
13	A02E 5635 00	Guide	ガイド（給紙）		C	1	
14	A02E 5632 00	Guide	ガイド（可動一段目）		D	1	
15	A02E 5610 00	Reinforce plate	補強板（さばきフレーム）		C	1	
16	A02E 5631 00	Bracket	取付板（さばきフレーム）		D	1	

2ND PAPER FEED SECTION

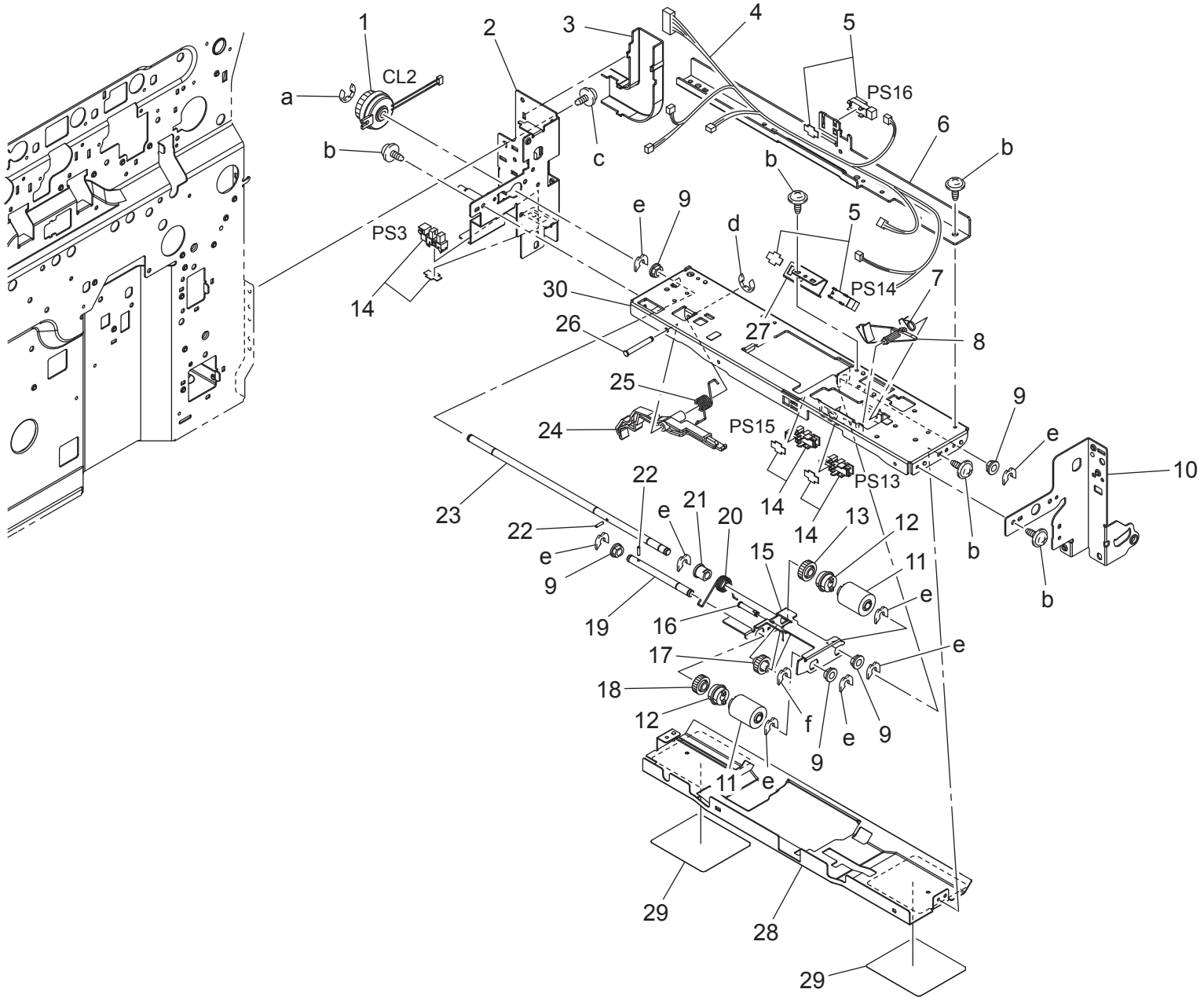

Key	Part No.	Description		Destinations	Class	QTY	Standard parts
1	A02E M202 00	Clutch	クラッチ		C	1	a-V217 0400 01
2	A02E G570 00	Caulking Rear Frame/Paper Feed2	フレーム後／給紙２かしめ Ａｓｓｙ		D	1	b-V137 0306 03
3	A02E 5753 00	Cover	カバー（ハーネス）		D	1	c-V137 0408 03
4	A02E N106 02	Conveyance Wiring /2	搬送束線／２		D	1	d-V217 0300 01
5	A02E R904 00	Photo Interrupter	フォトインタラプタ		I	2	e-V218 0400 86
6	A02E 5791 00	Bracket	取付板（縦搬送用反射センサ）		D	1	f-V218 0300 86
7	A02E 5612 00	Torsion spring	ねじりコイルばね		C	1	
8	4030 3016 12	ACTUATOR	アクチュエータ		C	1	
9	4131 3003 01	BUSHING	軸受		C	5	
10	A02E 5751 03	Frame	フレーム（前）		D	1	
11	A00J 5636 00	Roller	ローラ		A	2	
12	A02E 5611 00	Clutch	クラッチ		C	2	
13	4425 3013 01	GEAR 30T	ギヤ　３０Ｔ		C	1	
14	4037 0906 01	PHOTO INTERRUPTER	フォトインタラプター		B	3	
15	A02E 5607 00	Holder	ホルダ（給紙）		D	1	
16	4040 3097 01	SHAFT	シャフト		D	1	
17	4030 3008 01	GEAR 29T	ギヤ　２９Ｔ		C	1	
18	4425 3016 01	GEAR 32T	ギヤ　３２Ｔ		C	1	
19	4030 3003 01	SHAFT	シャフト		D	1	
20	4030 3030 01	TORSION SPRING	ねじりコイルばね		C	1	
21	1065 3086 01	BUSHING	シ゛クウケ		C	1	
22	1067 2501 01	PIN	ヒ゜ン		C	2	
23	A02E 5605 00	Shaft	シャフト（給紙）		D	1	
24	A02E 5613 00	Lever	レバー（ピック解除）		C	1	
25	A02E 5614 00	Torsion spring	ねじりコイルばね（ピック解除）		C	1	
26	A02E 5608 00	Shaft	シャフト		D	1	
27	A02E 5609 00	Bracket	取付板（給紙用反射センサ）		D	1	
28	A02E 5754 00	Guide plate	ガイド板（給紙）		C	1	
29	A02E 5755 01	Guide	ガイド（給紙下）		C	2	
30	A02E 5603 00	Frame	フレーム（給紙・上）		D	1	

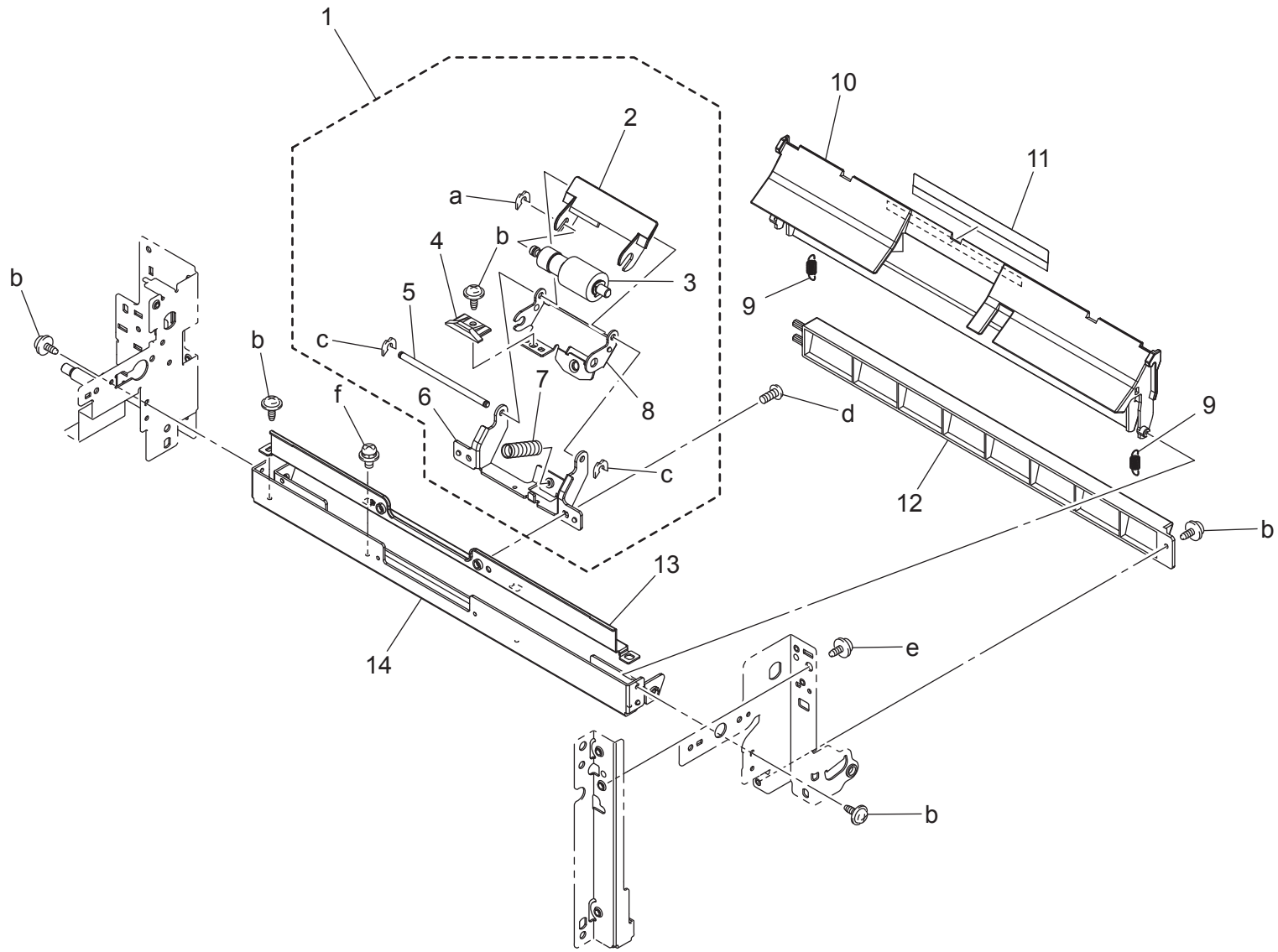
1
2
3
4
5
6
7
8
9
10
11
12
13
14
a
b
c
d
e
f

Key	Part No.	Description		Destinations	Class	QTY	Standard parts
1	A02E R729 00	Separation Roller Assy	分離ローラ ＡＳＳＹ		C	1	a-V218 0400 86 b-V137 0306 03 c-V218 0300 86 d-V136 0308 03 e-V137 0408 03 f-V116 0308 03
2	A02E 5636 00	Guide	ガイド（さばき後）		D	1	
3	A02E F566 00	Separation Roller Assy	分離ローラー Ａｓｓｙ		A	1	
4	4030 3078 01	LEVER	レバー		C	1	
5	4030 3039 01	SHAFT	シャフト		D	1	
6	4030 3014 01	BRACKET	取付板		D	1	
7	4030 3017 03	PRESSURE SPRING	圧縮コイルばね		C	1	
8	4030 3013 01	HOLDER	ホルダ		D	1	
9	4030 3125 01	TENSION SPRING	引張コイルばね		C	2	
10	A02E 5772 00	Guide	ガイド（可動　２段目）		C	1	
11	4030 3105 01	GUIDE	ガイド		C	1	
12	A02E 5843 00	Guide plate	ガイド板		C	1	
13	A02E 5610 00	Reinforce plate	補強板（さばきフレーム）		C	1	
14	A02E 5771 00	Bracket	取付板（さばきフレーム）		D	1	

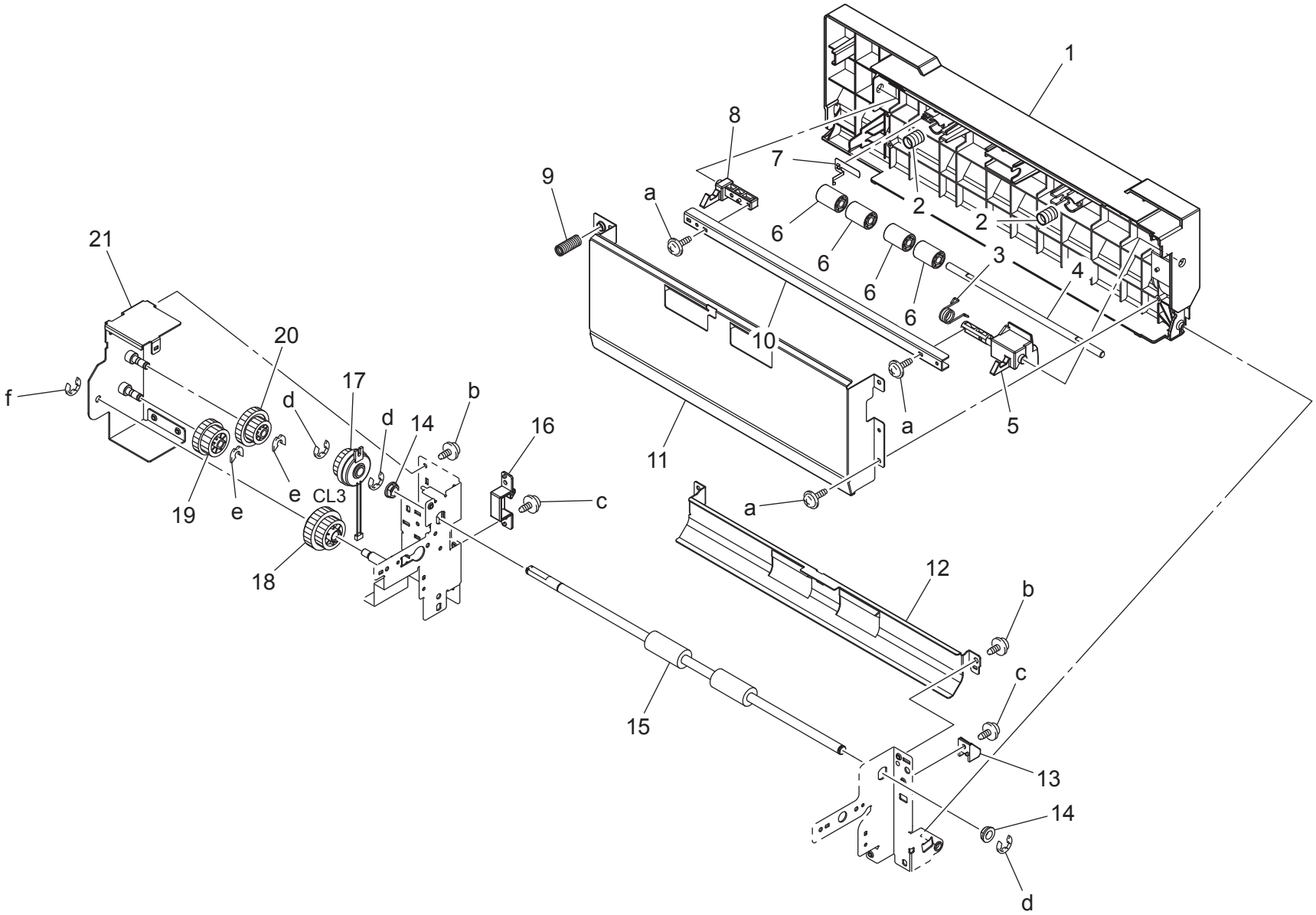
1
2
2
3
4
5
6
6
6
6
6
7
8
9
10
11
12
13
14
15
16
17
18
19
20
21
a
a
a
b
b
c
c
d
d
d
e
e
f
CL3

Key	Part No.	Description		Destinations	Class	QTY	Standard parts
1	A02E 5871 13	Door	扉		C	1	a-V153 0308 03
2	4030 3123 01	PRESSURE SPRING	圧縮コイルばね		C	2	b-V137 0306 03
3	4348 3058 01	TORSION SPRING	ねじりコイルばね		C	1	c-V137 0308 03
4	A02E 5882 00	Shaft	シャフト		D	1	d-V217 0600 01
5	A02E 5875 00	Claw	爪（給紙前）		C	1	e-V218 0400 86
6	4030 3122 01	ROLL	ころ		C	4	f-V217 0400 01
7	A02E 5874 00	Earth ground	アース（扉）		D	1	
8	A02E 5876 00	Claw	爪（給紙後）		C	1	
9	A02E 5879 01	Pressure spring	圧縮コイルばね		C	1	
10	4348 3054 01	BRACKET	取付板		D	1	
11	A02E 5872 00	Guide plate	ガイド板		C	1	
12	A02E 5842 01	Guide plate	ガイド板		C	1	
13	A02E 5880 00	Holder	ホルダ（前）		D	1	
14	4131 3532 02	BUSHING	軸受		C	2	
15	A02E 5841 00	Roller	ローラ（駆動）		C	1	
16	A02E 5881 00	Holder	ホルダ（後）		D	1	
17	A02E M200 00	Clutch	クラッチ		C	1	
18	A02E 5693 01	Gear 26/34T	ギヤ　２６／３４Ｔ		C	1	
19	A02E 5804 00	Gear 23/28T	ギヤ　２３／２８Ｔ		C	1	
20	A02E 5805 00	Gear 20/31T	ギヤ　２０／３１Ｔ		C	1	
21	A02E G571 00	Caulking (Drive Reinforce)	フレーム（駆動補強）かしめ Ａｓｓｙ		D	1	

1ST CASSETTE SECTION

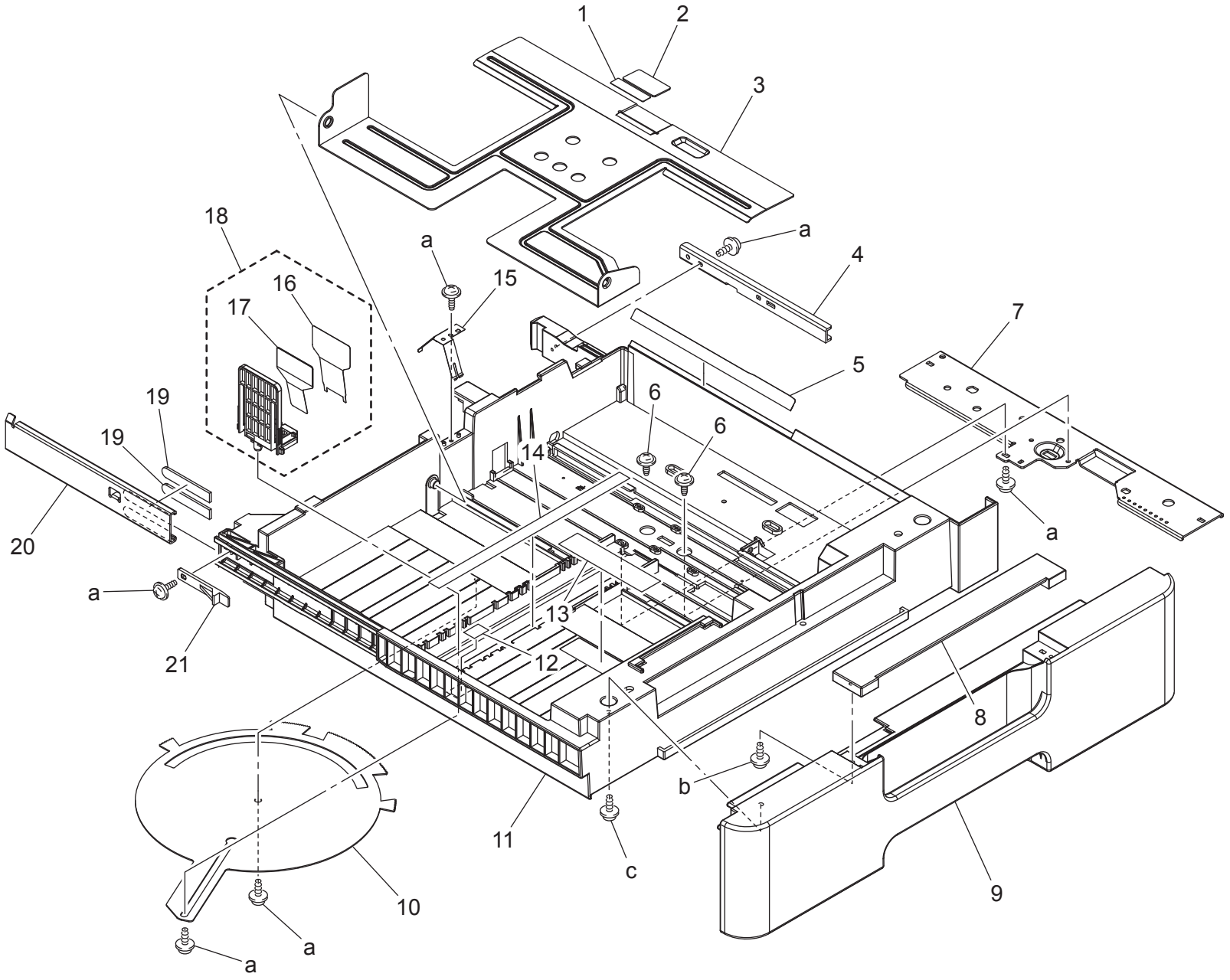

Key	Part No.	Description		Destinations	Class	QTY	Standard parts
1	A00J 6234 00	FRICTION PLATE	摩擦板		C	1	a-V153 0308 03
2	4030 3226 01	FRICTION SHEET	摩擦板		C	1	b-V153 0306 03
3	A02E 6218 00	Lifting plate	押上板		C	1	c-V153 0408 03
4	A02E 6206 00	Reinforce plate	補強板（カセット）		D	1	
5	A02E 6213 00	Guide	ガイド（前さばき）		C	1	
6	4498 3834 01	SCREW	ねじ		C	2	
7	A02E 6219 00	Bracket	取付板		D	1	
8	A02E 6207 00	Cover	カバー（カセットカバー上面）		C	1	
9	A02E 6202 00	Cover	カバー（カセット１）		C	1	
10	4002 3108 01	LEVER	レバー		C	1	
11	A02E 6201 04	Cassette	カセット（１段目）		D	1	
12	A02E 9413 00	Label Fd	ラベル　ＦＤ		C	1	
13	A02E 9415 00	Label Cd	ラベル　ＣＤ		C	1	
14	A00J 9422 02	Label FD	ラベル　ＦＤ		C	1	
15	4030 3223 03	Earth ground	アース		C	1	
16	4030 3228 12	GUIDE	ガイド		C	1	
17	A02E 6223 00	Guide plate	ガイド板		C	1	
18	A02E R734 00	Regulating Plate Assy	規制板 Ａｓｓｙ		C	1	
19	A02E 6234 00	Brake	ブレーキ材（カセットレール）		C	2	
20	A02E 6226 00	Rail	レール（補助・左）		D	1	
21	4498 3469 01	STOPPER	ストッパ		D	1	

1ST CASSETTE SECTION

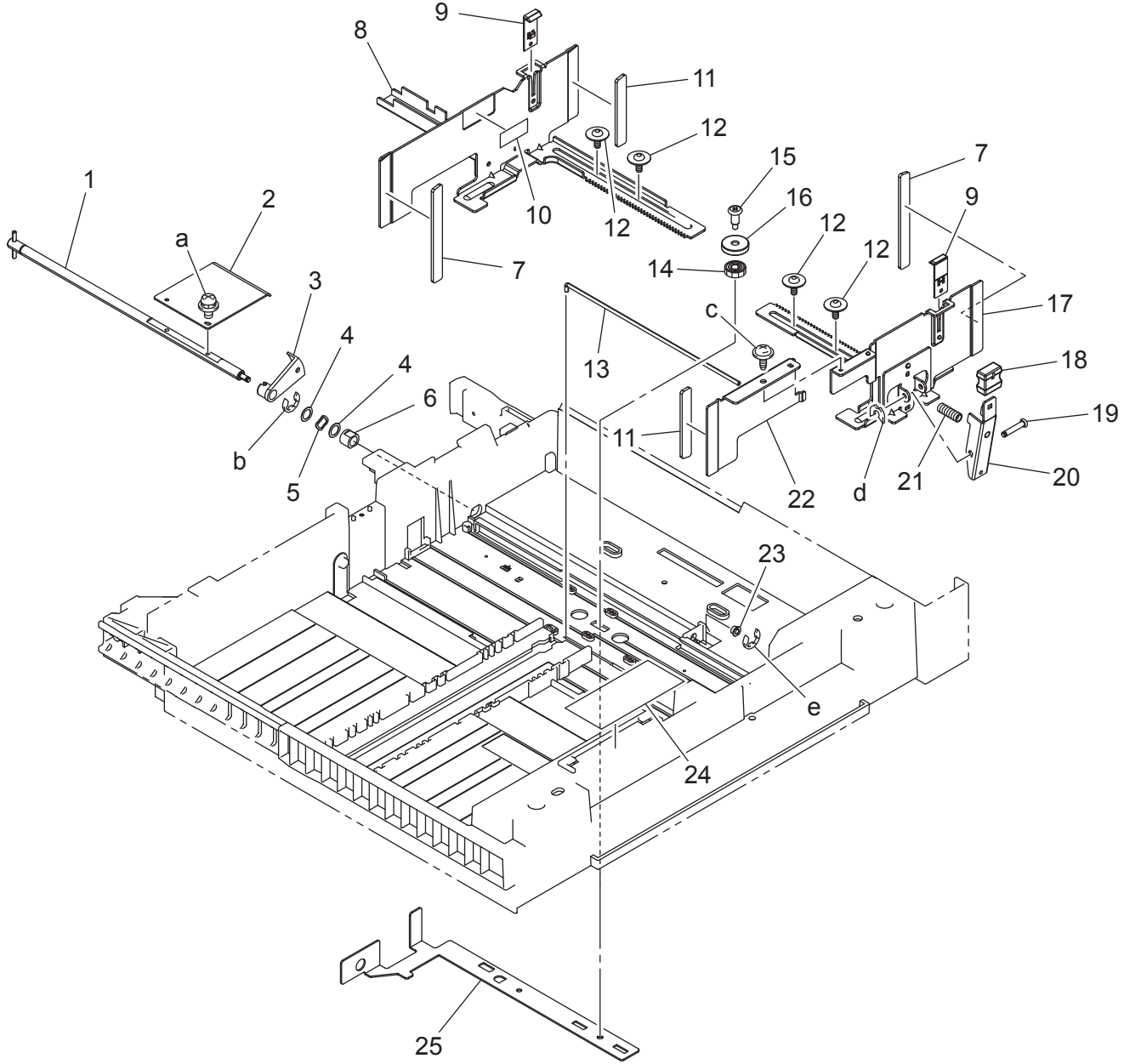

Key	Part No.	Description		Destinations	Class	QTY	Standard parts
1	A02E 6216 00	Shaft	シャフト（押上）		D	1	a-V116 0308 03
2	4030 3206 01	LEVER	レバー		D	1	b-V217 0600 01
3	4030 3207 01	ACTUATOR	アクチュエータ		C	1	c-4106 2063 01
4	4011 3021 01	WASHER	ワッシャ		C	2	d-V218 0300 86
5	4011 3020 01	WASHER	ワッシャ		C	1	e-V217 0300 01
6	1274 3603 01	BUSHING	ジクウケ		C	1	
7	A02E 6233 00	Cushion	クッション（ガイド）		C	2	
8	A02E 6209 00	Regulating plate	規制板（後）		C	1	
9	4537 3317 01	GUIDE	ガイド		D	2	
10	4002 7306 01	LABEL CARRYING CAPACITY	ラベル　積載量		C	1	
11	A02E 6227 00	Cushion	クッション（ガイド）		C	2	
12	4163 5293 01	SCREW	ねじ		C	4	
13	A00J 6222 00	Lock Shaft	ロック軸		C	1	
14	A02E 6224 00	Gear 14T	ギヤ　１４Ｔ		C	1	
15	4030 3214 02	SHOULDER SCREW	段ねじ		C	1	
16	4030 3215 01	GUIDE	ガイド		D	1	
17	A02E 6208 01	Regulating plate	規制板（前）		C	1	
18	4037 3204 01	KNOB	つまみ		C	1	
19	4498 3826 01	SHAFT	シャフト		D	1	
20	4128 3823 01	LEVER	レバー		C	1	
21	4498 3825 01	PRESSURE SPRING	圧縮コイルばね		C	1	
22	A02E 6210 00	Reinforce plate	補強板		C	1	
23	0992 3014 01	BUSHING	ジクウケ		C	1	
24	A02E 9412 00	Label Paper Supply	ラベル　ペーパー補給		C	1	
25	A02E 6220 00	Bracket	取付板		D	1	

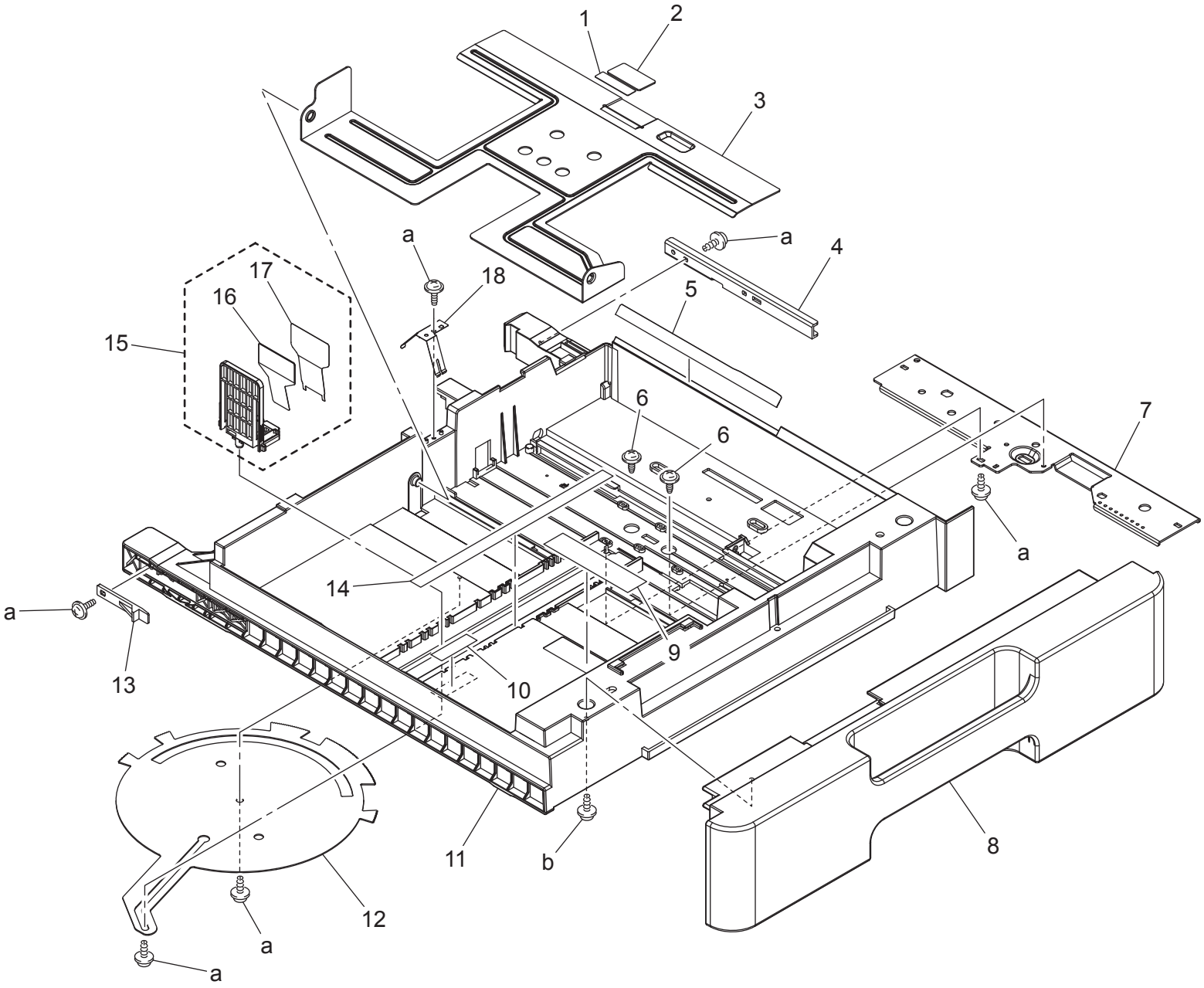
1
2
3
a
a
4
5
18
17
16
15
6
6
7
a
14
a
13
9
10
11
b
8
12
a
a

Key	Part No.	Description		Destinations	Class	QTY	Standard parts
1	A00J 6234 00	FRICTION PLATE	摩擦板		C	1	a-V153 0308 03
2	4030 3226 01	FRICTION SHEET	摩擦板		C	1	b-V153 0408 03
3	A02E 6218 00	Lifting plate	押上板		C	1	
4	A02E 6206 00	Reinforce plate	補強板（カセット）		D	1	
5	A02E 6213 00	Guide	ガイド（前さばき）		C	1	
6	4498 3834 01	SCREW	ねじ		C	2	
7	A02E 6219 00	Bracket	取付板		D	1	
8	A02E 6302 00	Cover	カバー（カセット２）		C	1	
9	A00J 9421 02	Label CD	ラベル　ＣＤ		C	1	
10	A00J 9423 02	Label FD	ラベル　ＦＤ		C	1	
11	A02E 6301 03	Cassette	カセット（２段目）		D	1	
12	A02E 6214 00	Lever	レバー		C	1	
13	4498 3469 01	STOPPER	ストッパ		D	1	
14	A00J 9422 02	Label FD	ラベル　ＦＤ		C	1	
15	A02E R734 00	Regulating Plate Assy	規制板 Ａｓｓｙ		C	1	
16	A02E 6223 00	Guide plate	ガイド板		C	1	
17	4030 3228 12	GUIDE	ガイド		C	1	
18	4030 3223 03	Earth ground	アース		C	1	

2ND CASSETTE SECTION

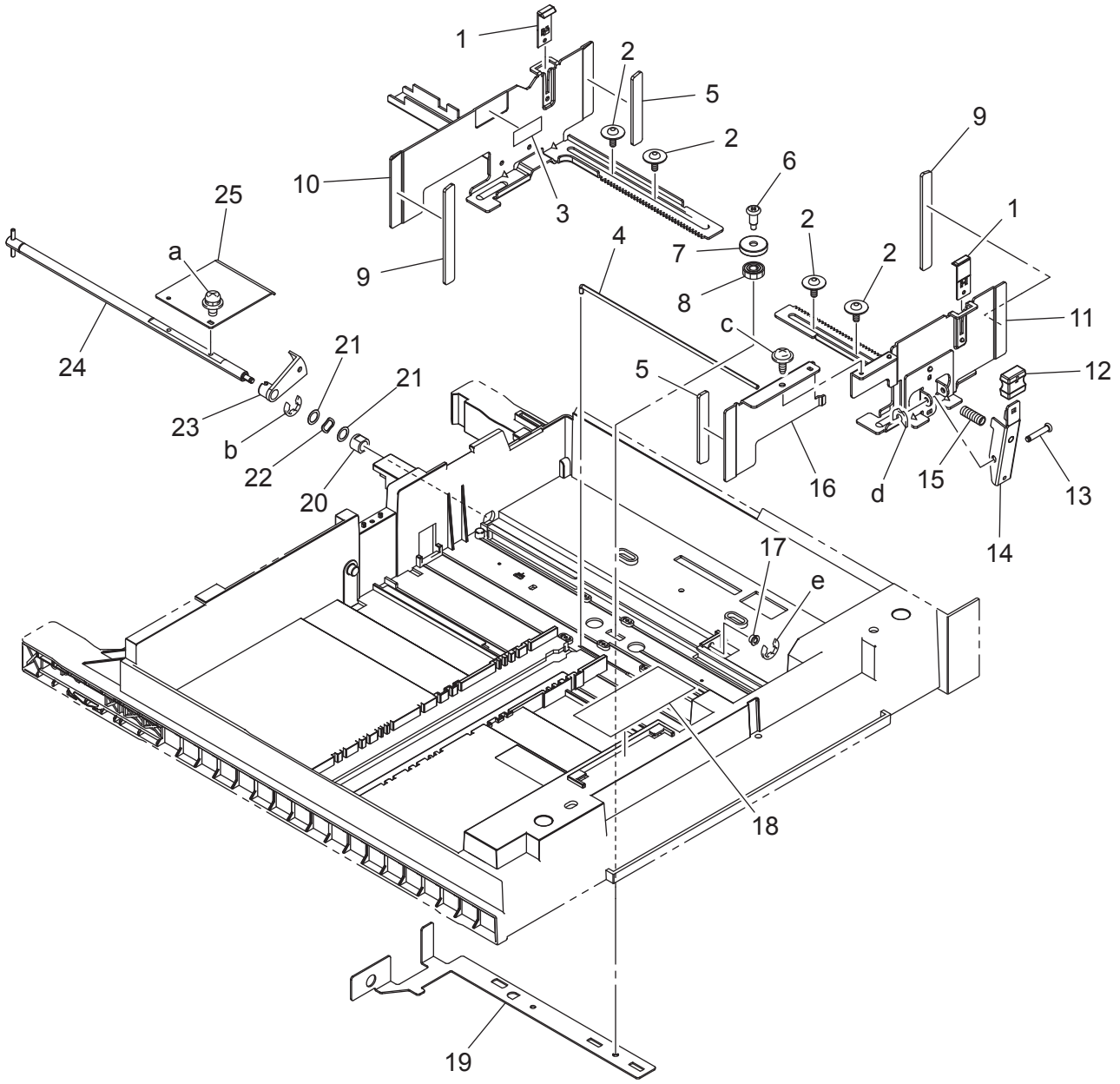

Key	Part No.	Description		Destinations	Class	QTY	Standard parts
1	4537 3317 01	GUIDE	ガイド		D	2	a-V116 0308 03
2	4163 5293 01	SCREW	ねじ		C	4	b-V217 0600 01
3	4002 7306 01	LABEL CARRYING CAPACITY	ラベル　積載量		C	1	c-4106 2063 01
4	A00J 6222 00	Lock Shaft	ロック軸		C	1	d-V218 0300 86
5	A02E 6227 00	Cushion	クッション（ガイド）		C	2	e-V217 0300 01
6	4030 3214 02	SHOULDER SCREW	段ねじ		C	1	
7	4030 3215 01	GUIDE	ガイド		D	1	
8	A02E 6224 00	Gear 14T	ギヤ　１４Ｔ		C	1	
9	A02E 6233 00	Cushion	クッション（ガイド）		C	2	
10	A02E 6209 00	Regulating plate	規制板（後）		C	1	
11	A02E 6208 01	Regulating plate	規制板（前）		C	1	
12	4037 3204 01	KNOB	つまみ		C	1	
13	4498 3826 01	SHAFT	シャフト		D	1	
14	4128 3823 01	LEVER	レバー		C	1	
15	4498 3825 01	PRESSURE SPRING	圧縮コイルばね		C	1	
16	A02E 6210 00	Reinforce plate	補強板		C	1	
17	0992 3014 01	BUSHING	ジクウケ		C	1	
18	A02E 9412 00	Label Paper Supply	ラベル　ペーパー補給		C	1	
19	A02E 6220 00	Bracket	取付板		D	1	
20	1274 3603 01	BUSHING	ジクウケ		C	1	
21	4011 3021 01	WASHER	ワッシャ		C	2	
22	4011 3020 01	WASHER	ワッシャ		C	1	
23	4030 3207 01	ACTUATOR	アクチュエータ		C	1	
24	A02E 6216 00	Shaft	シャフト（押上）		D	1	
25	4030 3206 01	LEVER	レバー		D	1	

MANUAL FEED TRAY UNIT

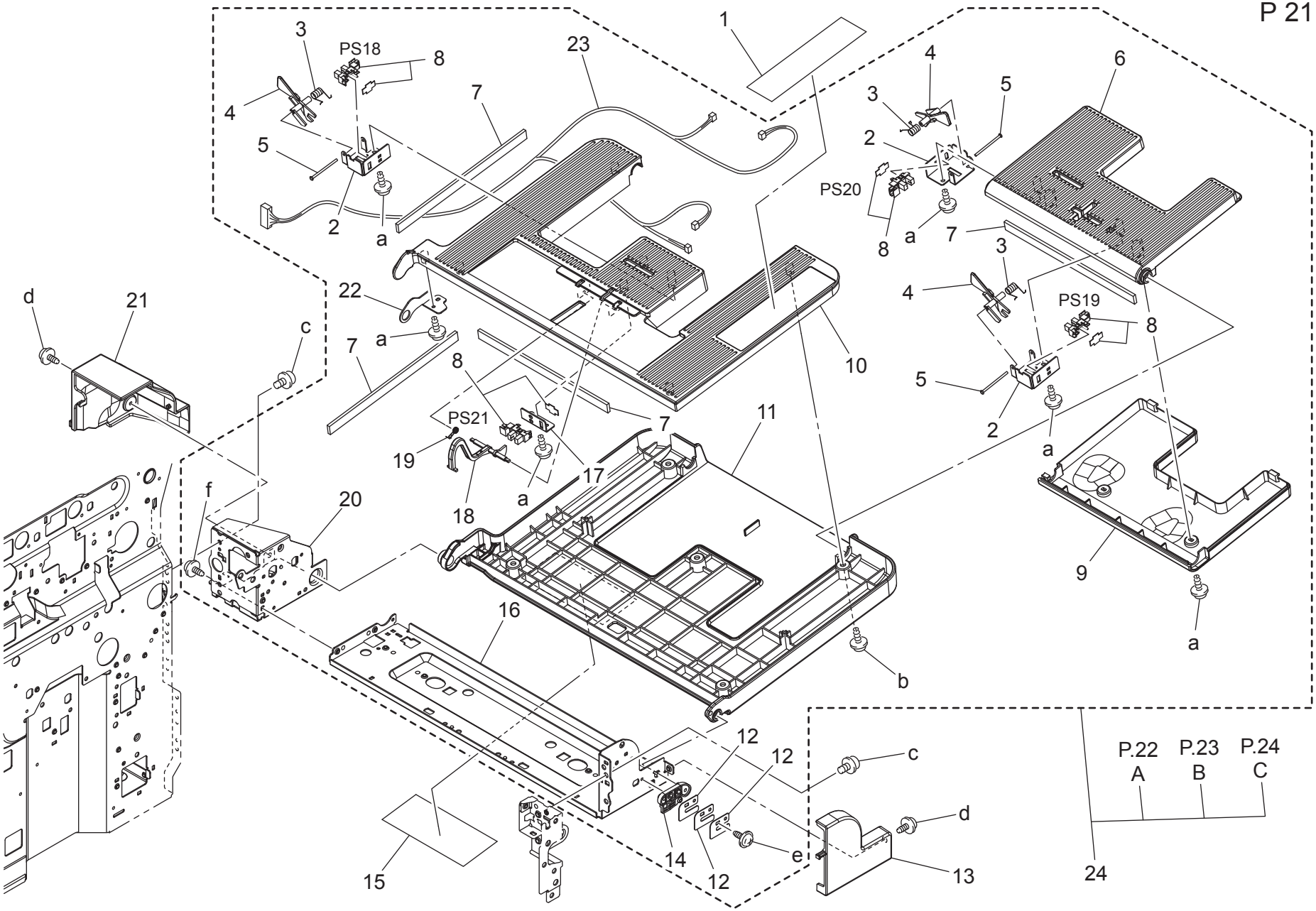

Key	Part No.	Description		Destinations	Class	QTY	Standard parts
1	A02E 9410 00	Label Operation	ラベル　手差操作		C	1	a-V153 0308 03
2	A02E 5985 00	Bracket	取付板（ＦＤ サイズ検出）		D	3	b-V153 0308 04
3	4030 3446 01	TORSION SPRING	ねじりコイルばね		C	3	c-V116 0410 03
4	A02E 5984 00	Actuator	アクチュエータ		C	3	d-V137 0308 04
5	1134 3042 02	SHAFT	シャフト		D	3	e-V137 0310 03
6	A02E 5911 00	Tray	トレイ（補助）		C	1	f-V137 0306 03
7	A02E 5986 00	Seal	シール（ハーネス押さえ）		C	4	
8	4037 0906 01	PHOTO INTERRUPTER	フォトインタラプター		B	4	
9	A02E 5918 01	Cover	カバー（補助）		C	1	
10	A02E 5909 01	Cover	カバー（トレイ）		C	1	
11	A02E 5908 00	Tray	トレイ（マルチ手差し）		C	1	
12	9J06 3286 02	PLATE SPRING	板ばね（トレイ保持）		D	3	
13	A02E 5906 00	Cover	カバー（Ｆ）		C	1	
14	9J06 3215 02	HOLD PLATE	保持板		D	1	
15	A02E 9411 00	Label Caution	ラベル　注意		C	1	
16	A02E 5903 02	Frame	フレーム（Ｆ）		D	1	
17	9J06 3235 01	BRACKET	取付板		D	1	
18	A02E 5982 00	Actuator	アクチュエータ		C	1	
19	4038 3234 02	TORSION SPRING	ねじりコイルばね		C	1	
20	A02E G620 00	Caulking (Frame Right)	フレーム（Ｒ）カシメ Ａｓｓｙ		D	1	
21	A02E 5907 01	Cover	カバー（Ｒ）		C	1	
22	A02E 5910 00	Bracket	取付板（トレイ支点）		D	1	
23	A02E N101 01	Sensor Wiring /1	センサ束線／１		D	1	
24	A02E R716 00	Multiple Bypass Assy	マルチ手差し ＡＳＳＹ		C	1	

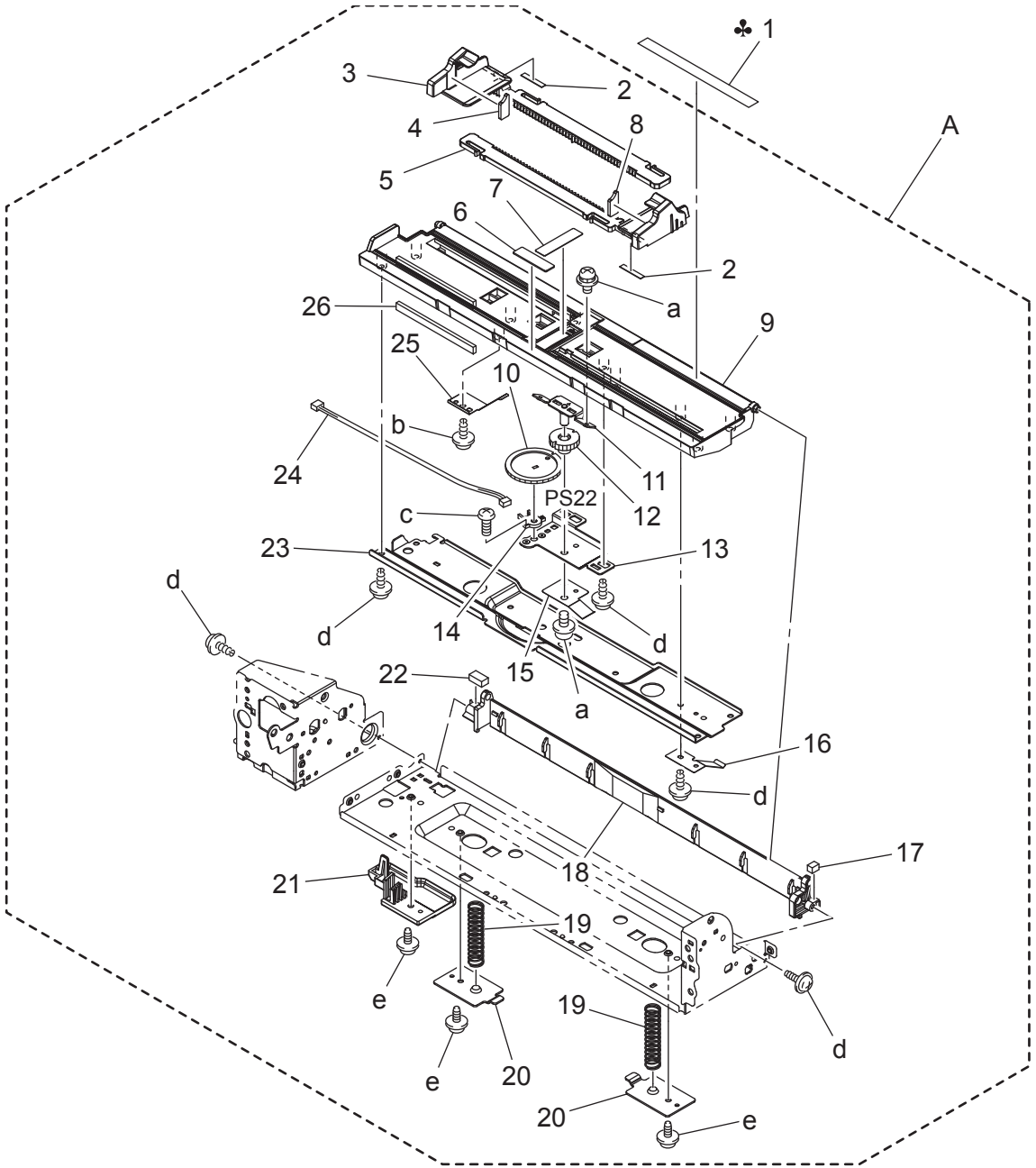
♣ 1
A
3
2
4
8
5
7
6
2
a
26
9
25
10
b
24
11
12
PS22
c
23
13
d
d
14
d
15
22
a
16
d
17
18
21
19
e
19
d
e
20
20
e

Key	Part No.	Description		Destinations	Class	QTY	Standard parts
1	A02E 9409 01	Scale	スケール（手差し・メトリック）	A,A1,C	C	1	a-V116 0308 03
1	A02E 9408 00	Scale	スケール（手差し・インチ）	B,G2	C	1	b-V153 0306 03
2	A02E 5934 00	Brake	ブレーキ材（規制下）		C	2	c-V111 1704 03
3	A02E 5924 00	Regulating plate	規制板（R）		C	1	d-V153 0308 03
4	A02E 5933 00	Brake	ブレーキ材（サイド規制 R）		C	1	e-V137 0306 03
5	A02E 5923 00	Regulating plate	規制板（F）		C	1	
6	4687 3281 01	FRICTION SHEET	摩擦板		C	1	
7	A00J 6234 00	FRICTION PLATE	摩擦板		C	1	
8	A02E 5932 00	Brake	ブレーキ材（サイド規制 F）		C	1	
9	A02E 5922 00	Lifting plate	押上板		C	1	
10	A02E 5983 00	Gear 40T	ギヤ　４０Ｔ		C	1	
11	A02E G621 00	Caulking Gear Mounting Plate	ギヤ取付板カシメ Ａｓｓｙ		D	1	
12	A02E 5921 00	Gear 20T	ギヤ　２０Ｔ		C	1	
13	A02E 5981 00	Bracket	取付板（ＣＤ 検出 ＡＳＳＹ）		D	1	
14	V801 3000 06	RESISTOR	その他可変抵抗器		D	1	
15	A02E 5935 00	Earth ground	アース		D	1	
16	A02E 5936 00	Earth ground	アース		D	1	
17	A02E 5919 00	Cushion	クッション（マル手トレイ、F）		C	1	
18	A02E 5905 01	Holder	ホルダ（押上支点）		C	1	
19	A02E 5925 00	Pressure spring	圧縮コイルばね		C	2	
20	A02E 5926 00	Hold plate	保持板（ばね）		D	2	
21	A02E 5927 01	Guide	ガイド（押上板）		D	1	
22	A02E 5917 00	Cushion	クッション（マル手トレイ、R）		C	1	
23	A02E 5928 01	Reinforce plate	補強板		D	1	
24	A02E N103 00	Sensor Wiring /2	センサ束線／２		D	1	
25	A02E 5931 00	Plate spring	板ばね（ブレーキ材）		D	1	
26	A02E 5937 00	Seal	シール（ハーネス押さえ）		C	1	

MANUAL FEED TRAY UNIT

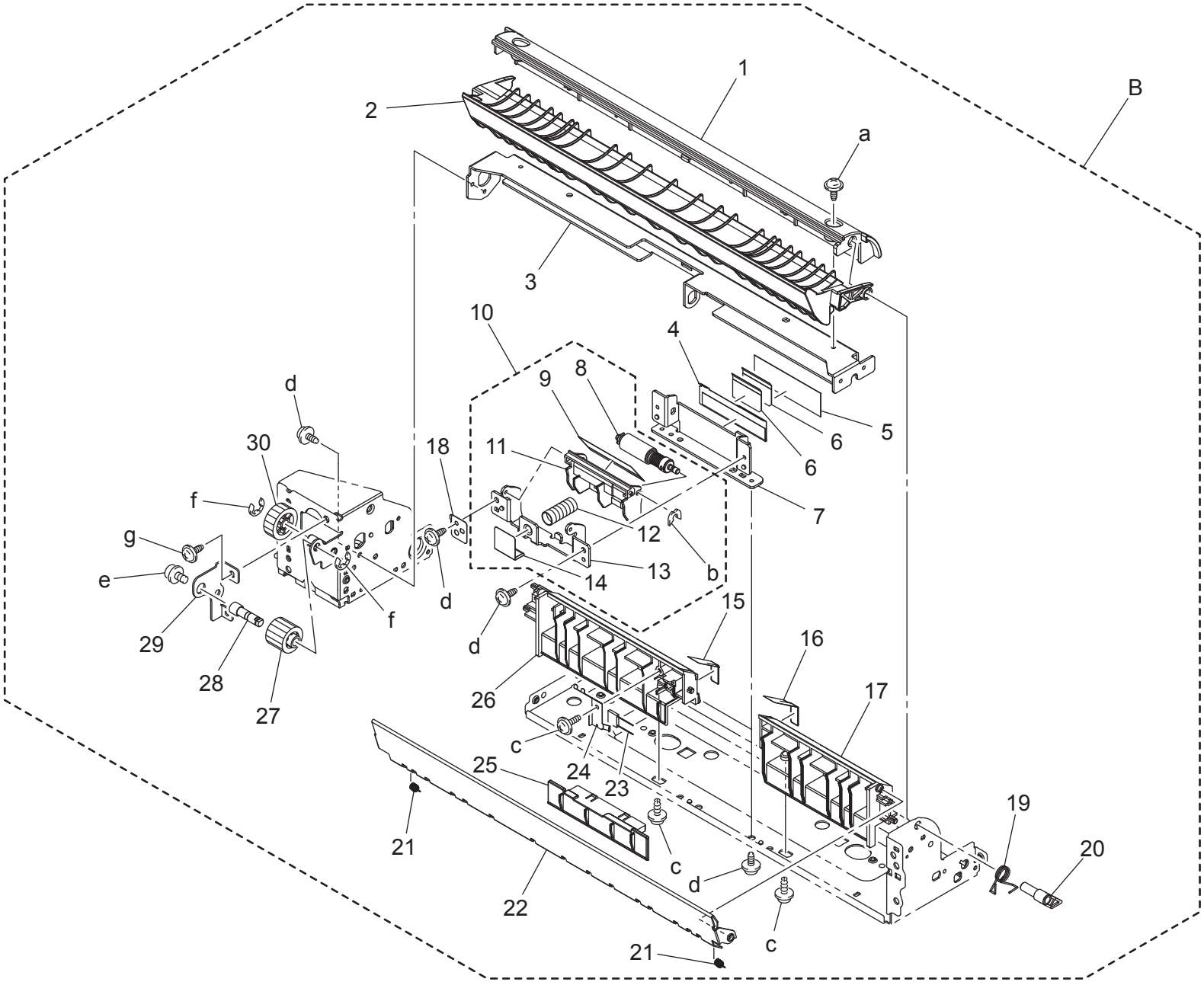

Key	Part No.	Description		Destinations	Class	QTY	Standard parts
1	A02E 5912 00	Cover	カバー（Ｔ）		C	1	a-V137 0306 04
2	A02E 5941 00	Guide	ガイド（給紙上）		C	1	b-V218 0300 86
3	A02E 5913 00	Bracket	取付板（ローラ）		D	1	c-V153 0308 03
4	4030 3402 01	GUIDE PLATE	ガイド板		C	1	d-V137 0306 03
5	4030 3489 01	SEAL	シール		C	1	e-V116 0308 03
6	4030 3403 01	GUIDE	ガイド		C	2	f-V217 0400 01
7	A02E 5973 01	Reinforce plate	補強板（捌き）		D	1	g-V137 0308 03
8	4034 0151 01	SEPARATION ROLLER	分離ローラ		A	1	
9	A02E 5976 00	Guide	ガイド（捌き後）		C	1	
10	A02E R717 00	Separation Roller Assy	分離ローラ ＡＳＳＹ		C	1	
11	A02E 5971 00	Holder	ホルダ（捌き）		D	1	
12	4030 3475 01	PRESSURE SPRING	圧縮コイルばね		C	1	
13	A02E 5972 00	Bracket	取付板（捌き）		D	1	
14	4038 3270 01	GUIDE	ガイド		C	1	
15	4038 3269 02	GUIDE	ガイド		C	1	
16	4038 3268 02	GUIDE	ガイド		C	1	
17	A02E 5901 00	Guide	ガイド（給紙下 Ｆ）		C	1	
18	A02E 5974 00	Earth ground	アース		D	1	
19	A02E 5945 00	Torsion spring	ねじりコイルばね		C	1	
20	A02E 5946 00	Lever	レバー（解除１）		C	1	
21	A02E 5943 00	Tension spring	引張コイルばね		C	2	
22	A02E 5942 00	Guide	ガイド（給紙下可動）		C	1	
23	9455 8076 01	RESISTOR	その他固定抵抗器		D	1	
24	A02E 5975 00	Earth ground	アース		D	1	
25	A02E 5915 00	Guide	ガイド（給紙下 Ｍ）		C	1	
26	A02E 5902 00	Guide	ガイド（給紙下 Ｒ）		C	1	
27	A02E 5968 00	Gear 18T	ギヤ　１８ Ｔ		C	1	
28	A02E 5967 00	Shaft	シャフト		D	1	
29	A02E 5966 00	Bracket	取付板		D	1	
30	A02E 5955 00	Gear 22T	ギヤ　２２ Ｔ		C	1	

MANUAL FEED TRAY UNIT

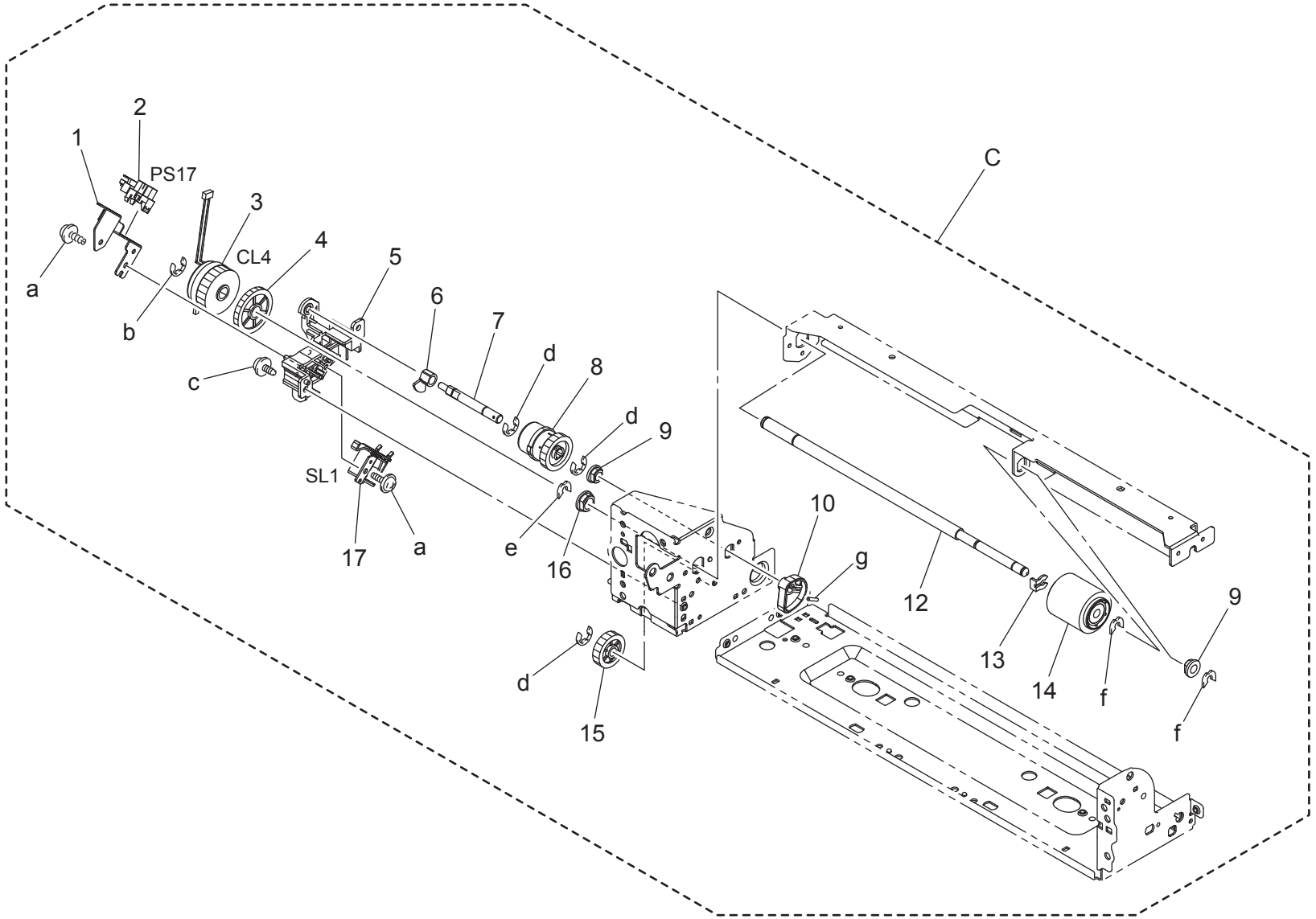

Key	Part No.	Description		Destinations	Class	QTY	Standard parts
1	A02E 5956 00	Bracket	取付板（センサ）		D	1	a-V153 0308 03
2	9335 1300 61	PHOTO INTERRUPTER	フォトインタラプタ		B	1	b-V217 0500 01
3	A02E M201 00	Clutch	クラッチ		C	1	c-V137 0306 03
4	A02E 5961 00	Gear 30T	ギヤ　３０Ｔ		C	1	d-V217 0400 01
5	A02E 5952 01	Bracket	取付板（駆動）		D	1	e-V218 0600 86
6	4038 3237 01	SHIELD PLATE	遮光板		C	1	f-V218 0400 86
7	A02E 5953 01 Old	Shaft	シャフト		D	1	g-V233 2010 50
7	A02E 5953 02	Shaft	シャフト		D	1	
8	A02E 5951 00	Clutch assy	クラッチ ＡＳＳＹ		C	1	
9	A02E 5963 00	Bushing	すべり軸受		C	2	
10	A02E 5960 01 Old	Cam	カム		C	1	
10	A02E 5960 02	Cam	カム		C	1	
12	A02E 5957 00	Shaft	シャフト（給紙）		D	1	
13	4142 3217 01	STOP RING	止め輪		C	1	
14	A02E 5947 00	Feed Roller	給紙ローラー		A	1	
15	A02E 5954 00	Gear 22T	ギヤ　２２Ｔ		C	1	
16	4131 3532 02	BUSHING	軸受		C	1	
17	9J06 M200 00	SOLENOID	フラッパーソレノイド		C	1	

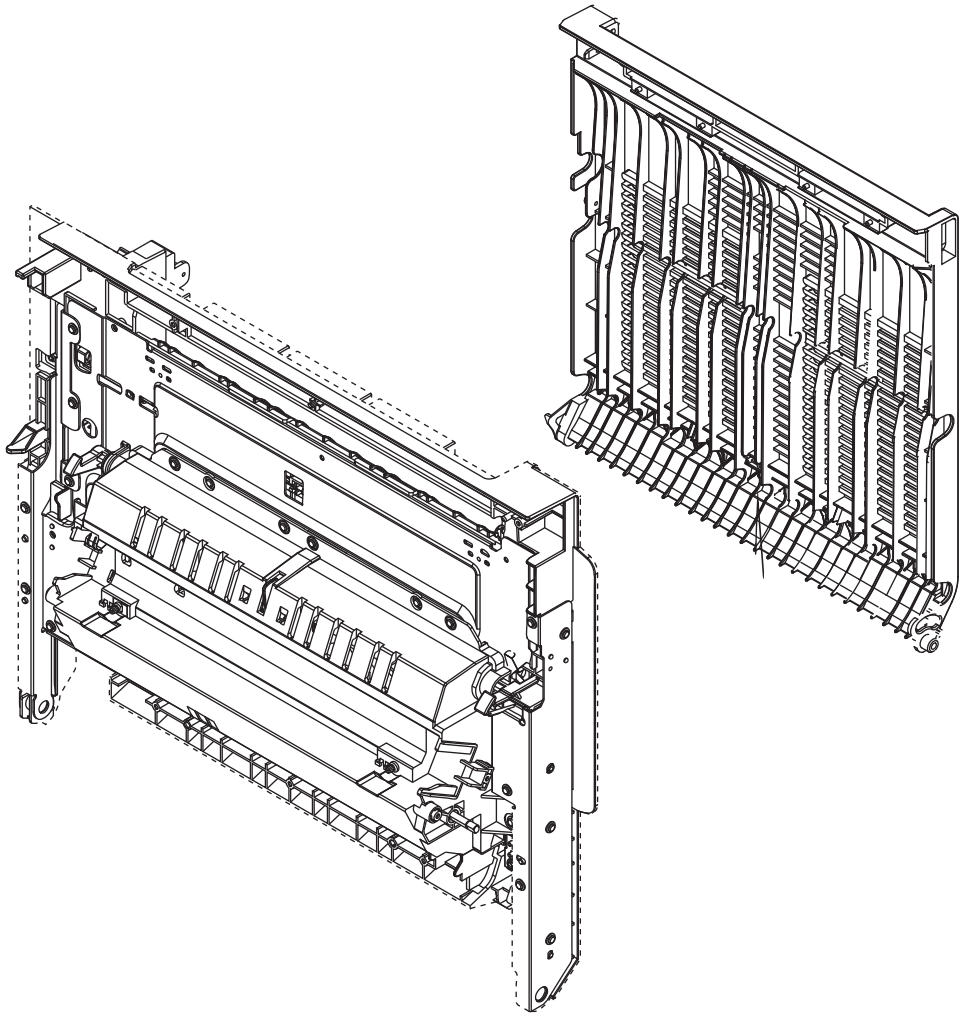

Key	Part No.	Description		Destinations	Class	QTY	Standard parts
1	A02E 8104 00	Cover	カバー（ＡＤＵ）		C	1	a-V137 0308 04
2	A02E 8110 00	Stopper	ストッパ（ＡＤＵ 扉）		C	1	b-V218 0600 86
3	4066 3705 01	PRESSURE SPRING	圧縮コイルばね		C	2	c-V153 0308 03
4	A02E 8103 00	Handle	取手（ＡＤＵ）		C	1	d-V217 0400 01
5	A02E 9417 00	Label Jam/Adu	ラベル　ジャム／ＡＤＵ		C	1	
6	4657 3736 01	PLATE SPRING	板ばね		C	2	
7	A02E 8102 02	Door	扉（ＡＤＵ）		C	1	
8	1154 4670 01	PROTECTION	保護材		C	1	
9	9335 1300 61	PHOTO INTERRUPTER	フォトインタラプタ		B	1	
10	A02E 8108 00	Bracket	取付板（ＡＤＵ 扉検出）		D	1	
11	A02E 8201 01	Guide	ガイド（Ｄｕｐ 突入上）		C	1	
12	A02E 8210 00	Roller	ローラ（第１）		C	1	
13	A02E 8151 00	Member	押え材（ＡＤＵ 第1Ｒ）		C	2	
14	4497 3116 01	ROLL	ころ		C	2	
15	A02E 8202 01	Guide	ガイド（Ｄｕｐ 突入下）		C	1	
16	A02E 8152 00	BUSHING	軸受		C	2	
17	A02E 8205 00	Earth ground	アース（ＡＤＵ 第１）		D	1	
18	4163 5293 01	SCREW	ねじ		C	1	
19	4036 5765 01	SHOULDER SCREW	段ねじ		C	2	
20	A02E 8203 01	Guide	ガイド（ＳＢ 切替・前）		C	2	
21	A02E 8207 00	Seal	シール（反転ユニット貼付用）		C	1	
22	A02E 8208 00	Reinforce plate	補強板		D	1	
23	A02E 8204 02	Guide	ガイド（ＳＢ 切替・後２）		C	1	
24	A02E 8206 01	Guide	ガイド（ＳＢ 切替・後１）		C	1	
25	A02E 8214 00	Gear 23T	ギヤ　２３Ｔ		C	1	
26	A02E R722 11	Vertical Conveyance Assy	縦搬送扉 ＡＳＳＹ		C	1	

ADU/VERTICAL CONVEYANCE SECTION

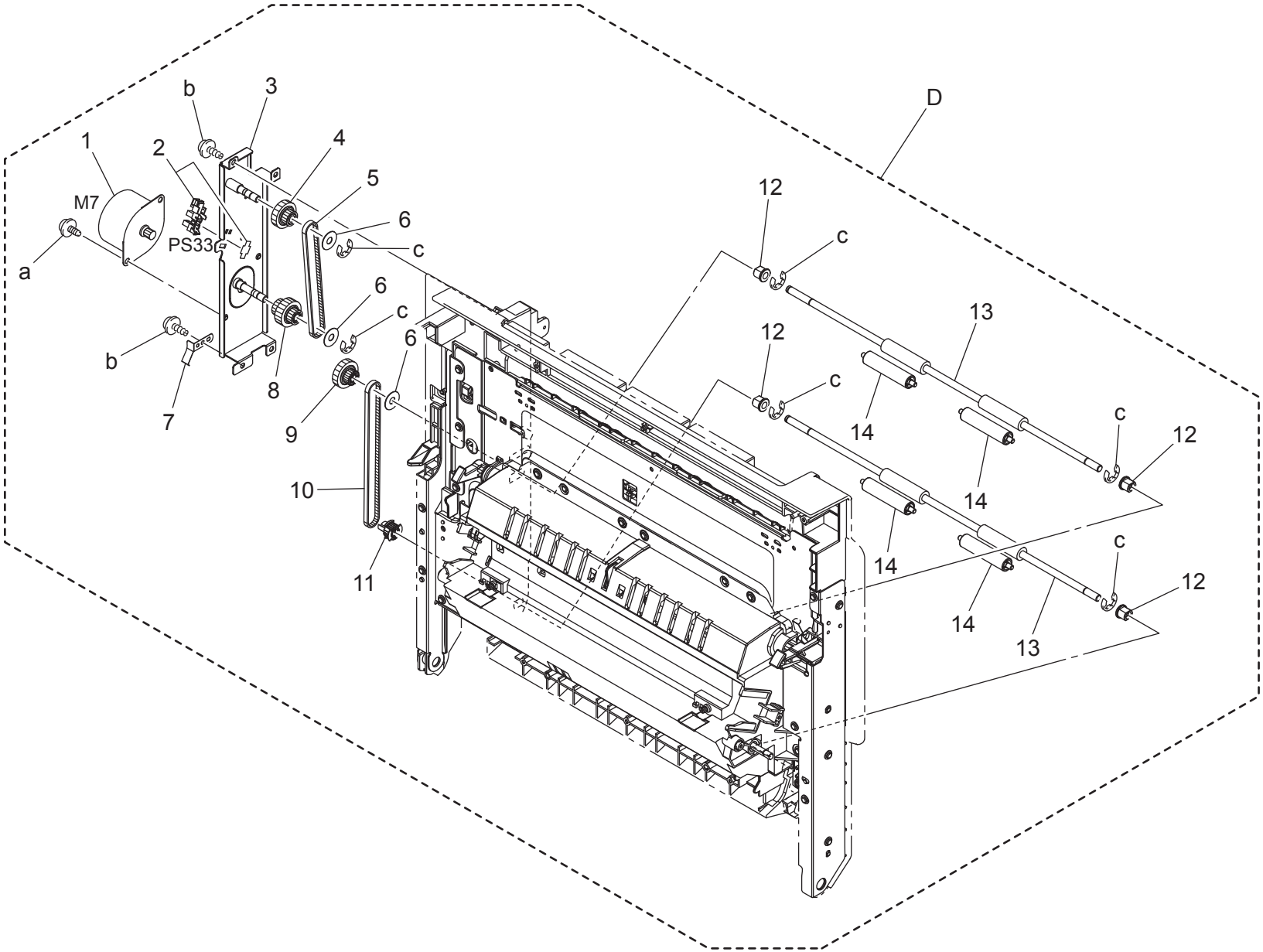

Key	Part No.	Description		Destinations	Class	QTY	Standard parts
1	A02E M10C 01	Stepping motor	ステッピングモータ		C	1	a-V137 0306 03
2	4037 0906 01	PHOTO INTERRUPTER	フォトインタラプター		B	1	b-V153 0308 03
3	A02E G700 00	Caulking (Mounting Plate)	取付板カシメ Ａｓｓｙ		D	1	c-V217 0400 01
4	A02E 8117 00	Gear 22/22T	ギヤ ２２／２２Ｔ		C	1	
5	A02E 8113 00	Timing Belt 264L	タイミングベルト ２６４Ｌ		C	1	
6	A02E 8119 00	Flange	フランジ		C	3	
7	A02E 8121 00	Plate spring	板ばね		D	1	
8	A02E 8132 00	Gear 22/22/26T	ギヤ ２２／２２／２６Ｔ		C	1	
9	A02E 8118 01	Gear 22/23T	ギヤ ２２／２３Ｔ		C	1	
10	A02E 8114 00	Timing Belt 316L	タイミングベルト ３１６Ｌ		C	1	
11	A02E 8120 01	Pulley	プーリ（ＡＤＵ第３）		C	1	
12	A02E 8152 00	BUSHING	軸受		C	4	
13	A02E 8106 00	Roller	ローラ（第２・第３）		C	2	
14	4497 3116 01	ROLL	ころ		C	4	

ADU/VERTICAL CONVEYANCE SECTION

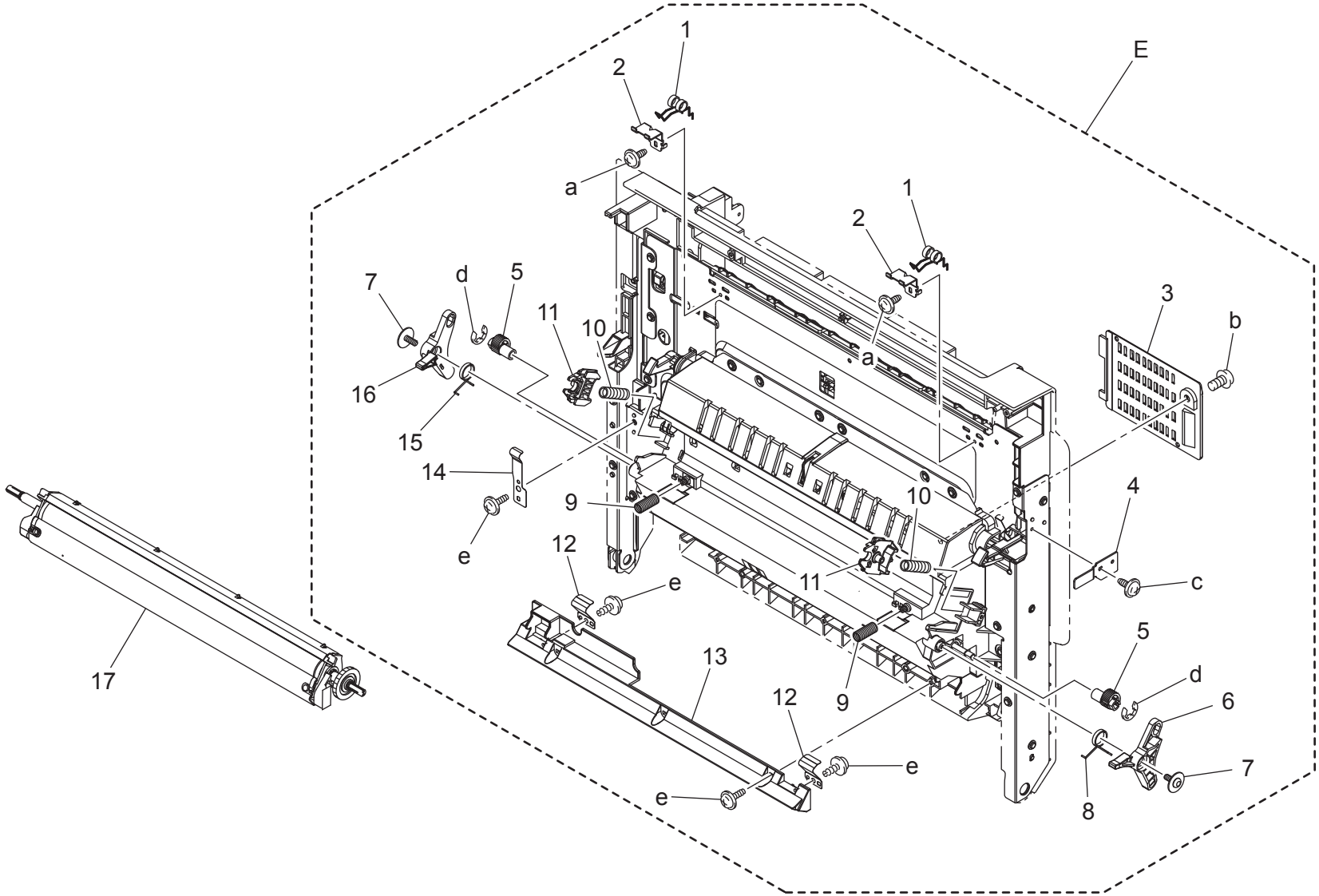

Key	Part No.	Description		Destinations	Class	QTY	Standard parts
1	A02E 7191 00	Torsion spring	ねじりコイルばね		C	2	a-V137 0306 03
2	A02E 7192 00	Bracket	取付板		D	2	b-V118 0408 03
3	A02E 7109 00	Holder	ホルダ（サクションフィルタ）		C	1	c-4154 3804 01
4	A02E 7100 00	Lever	レバー（安全 SW）		C	1	d-V217 0400 01
5	4038 3553 01	CAM	カム		C	2	e-V153 0308 03
6	A02E 7051 01	Lever	レバー（離間・前）		C	1	
7	4163 5293 01	SCREW	ねじ		C	2	
8	A02E 7053 00	Torsion spring	ねじりコイルばね（離間前）		C	1	
9	4038 4620 01	PRESSURE SPRING	圧縮コイルばね		C	2	
10	4038 4611 01	PRESSURE SPRING	圧縮コイルばね		C	2	
11	4038 3542 02	HOLDER	ホルダ		D	2	
12	4038 3520 01	PLATE SPRING	板ばね		D	2	
13	A02E 7107 01	Guide	ガイド（再給紙上）		C	1	
14	4038 3571 02	CONTACT	接点		D	1	
15	A02E 7054 00	Torsion spring	ねじりコイルばね（離間後）		C	1	
16	A02E 7052 01	Lever	レバー（離間・後）		C	1	
17	A02E R713 00	Transfer Roller Unit	転写ローラーユニット		A	1	

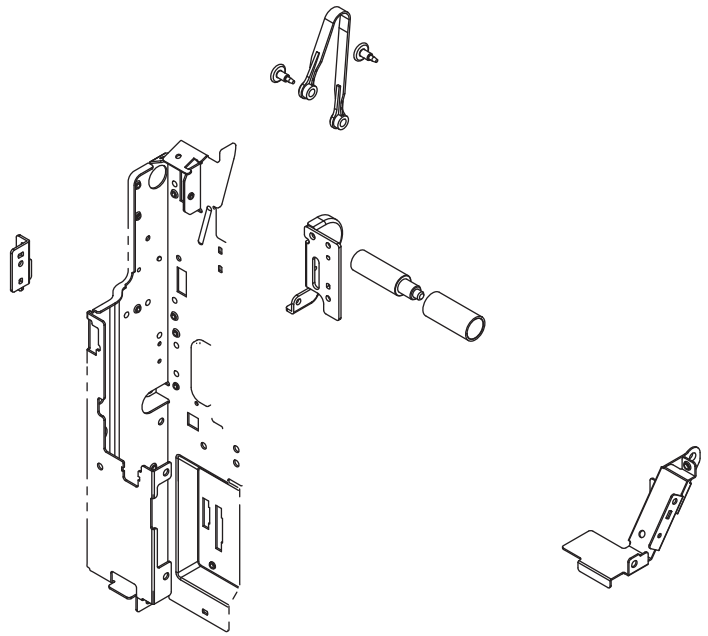

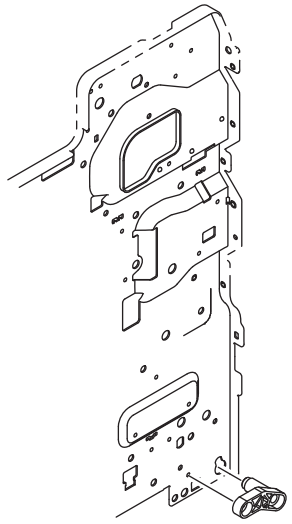

Key	Part No.	Description		Destinations	Class	QTY	Standard parts
1	A02E 7113 00	Reinforce plate	補強板（支点・後）		D	1	a-V137 0308 03
2	4038 3511 02	SHOULDER SCREW	段ねじ		C	2	b-V116 0408 03
3	A02E 7123 00	Stopper	ストッパ（右扉）		C	1	c-V137 0306 03
4	A02E 7115 00	Collar	カラー		C	1	
5	A02E 7111 00	Bracket	取付板		D	1	
6	A02E 7114 00	Shaft	シャフト		D	1	
7	A02E 7112 00	Torsion spring	ねじりコイルばね		C	1	
8	A02E 7117 01	Reinforce plate	補強板（支点後）		D	1	
9	A02E 9405 00	Label Jam	ラベル　ジャム		D	1	
10	4038 3516 01	SHAFT	シャフト		D	1	
11	A02E 7140 00	Cushion	クッション		C	2	

ADU/VERTICAL CONVEYANCE SECTION

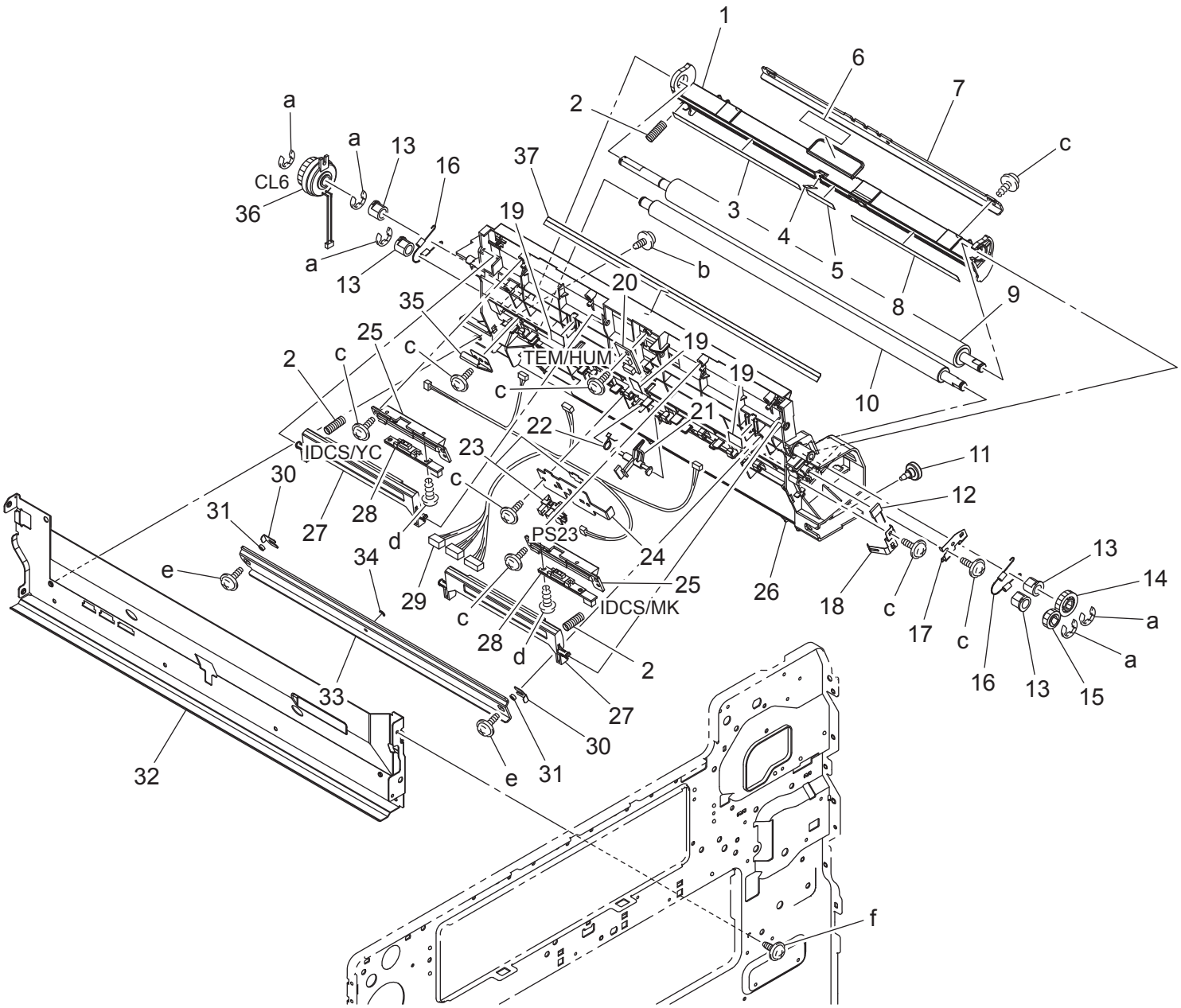

Key	Part No.	Description		Destinations	Class	QTY	Standard parts
1	A02E 7128 00	Guide	ガイド（Ｔ／Ｒ・下）		C	1	a-V217 0600 01
2	4038 3559 01	PRESSURE SPRING	圧縮コイルばね		C	3	b-V137 0308 03
3	4038 3537 01	GUIDE	ガイド		C	1	c-V153 0308 03
4	4038 3539 01	GUIDE	ガイド		C	1	d-V145 0308 03
5	4038 3538 01	GUIDE	ガイド		C	1	e-V153 0310 03
6	A02E 9406 00	Label Jam/M1	ラベル　ジャム／Ｍ１		D	1	f-V137 0306 03
7	A02E 7129 00	Reinforce plate	補強板		D	1	
8	4038 3536 01	GUIDE	ガイド		C	1	
9	A02E 7001 00	Roller	ローラ（タイミング駆動）		C	1	
10	4038 3502 02	ROLLER	ローラ		C	1	
11	4038 7023 00	SHOULDER SCREW	段ねじ		C	1	
12	V800 5003 00	FIXED POWER RESISTORS	ＦＩＸＥＤ　ＰＯＷＥＲ　ＲＥＳＩＳＴＯＲ		D	1	
13	4025 3572 01	BUSHING	軸受		C	4	
14	4004 3503 02	GEAR 20T	ギヤ　２０Ｔ		C	1	
15	4004 3504 02	GEAR 14T	ギヤ　１４Ｔ		C	1	
16	4038 3525 01	TENSION SPRING	引張コイルばね		C	2	
17	A02E 7130 00	Earth ground	アース		D	1	
18	4038 3567 01	PLATE SPRING	板ばね		D	1	
19	4128 3522 01	SEAL	シール		C	3	
20	A02E M505 00	Humidity sensor	温湿度センサ		C	1	
21	4038 3562 01	ACTUATOR	アクチュエータ		C	1	
22	1164 3527 02	TORSION SPRING	ねじりコイルばね		C	1	
23	4037 0906 01	PHOTO INTERRUPTER	フォトインタラプター		B	1	
24	4038 3561 03	BRACKET	取付板		D	1	
25	A02E 7057 00	Holder	ホルダ（ＩＤＣ）		D	2	
26	A02E 7126 01	Guide	ガイド（Ｔ／Ｒ）		C	1	
27	A02E 7058 01	Cover	カバー（レジストセンサ）		C	2	
28	A02E M500 00	Photo sensing	光電変換素子		I	2	
29	A02E N10B 00	Toner Detection harness	トナー検知束線		D	1	
30	4038 3597 01	SPACER	スペーサ		C	2	
31	4038 3593 01	WASHER	ワッシャ		C	2	
32	A02E 1006 01	Frame	フレーム（右）		D	1	
33	4038 3592 01	REINFORCE PLATE	補強板		D	1	
34	4038 5603 00	SPACER	スペーサ		D	1	
35	A02E 7132 01	Plate spring	板ばね		D	1	
36	A02E M200 00	Clutch	クラッチ		C	1	
37	4038 3540 03	GUIDE	ガイド		C	1	

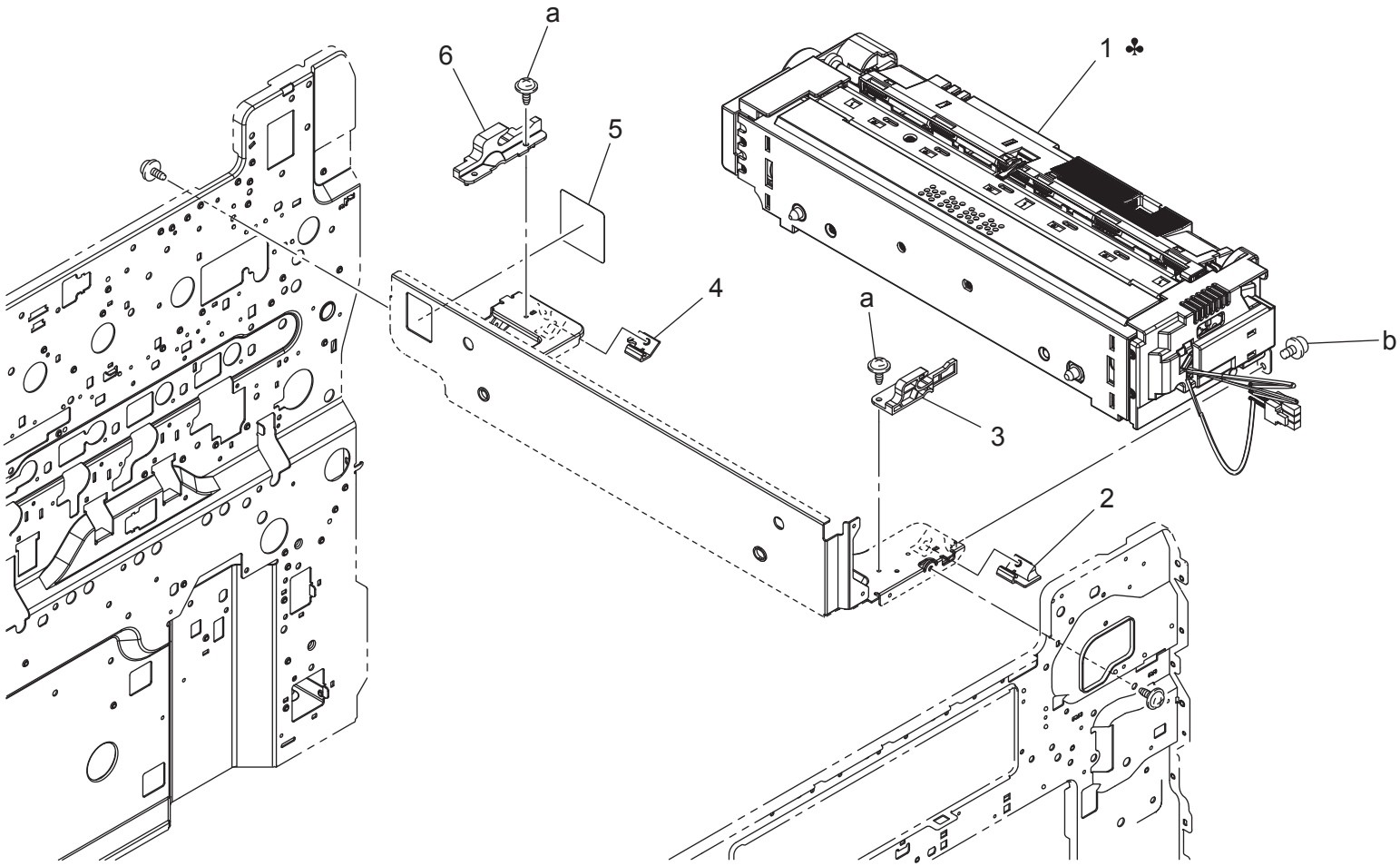
a
6
5
1 ✣
4
a
b
3
2

Key	Part No.	Description		Destinations	Class	QTY	Standard parts
1	A02E R718 11	Fusing Unit 100V	定着ユニット　１００Ｖ	A,A1	A	1	a-V137 0308 03
1	A02E R720 11	Fusing Unit 120V	定着ユニット　１２０Ｖ	B,G2	A	1	b-V116 0408 03
1	A02E R721 11	Fusing Unit 230V	定着ユニット　２３０Ｖ	C	A	1	
2	9J06 2082 01	HOLDER	ホルダ		C	1	
3	9J06 2462 01	GUIDE	ガイド		C	1	
4	9J06 2079 01	HOLDER	ホルダ		C	1	
5	A02E 1057 01	Seal	シール（定着台板）		C	1	
6	9J06 2463 02	Guide	ガイド		C	1	

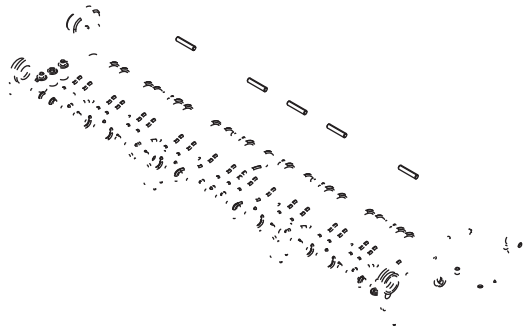

Key	Part No.	Description		Destinations	Class	QTY	Standard parts
1	A02E 8930 02	Cover	カバー（P 版・白）		C	1	a-V153 0308 03
2	A02E 8923 00	Neutralizing brush	除電ブラシ（奥）		C	1	
3	A02E 8922 00	Neutralizing brush	除電ブラシ（中）		C	1	
4	A02E N109 01	Cooling Wiring /1	冷却束線／1		D	1	
5	A02E 8921 00	Neutralizing brush	除電ブラシ（前）		C	1	
6	4163 5293 01	SCREW	ねじ		C	7	
7	9J03 M100 00	FAN MOTOR	ファンモータ		B	3	
8	A02E 8904 03	Guide	ガイド（排紙・上）		C	1	
9	A02E 8934 00	Torsion Spring	ねじりコイルばね		C	1	
10	4038 5886 03	EARTH GROUND	アース		D	1	
11	A02E 8905 00	Earth ground	アース		D	1	
12	4036 2549 01	PIN	ピン		D	5	
13	A02E 8913 00	Collar	カラー		C	5	
14	A02E 8902 03	Guide	ガイド（排紙・下）		C	1	
15	A02E 8925 00	Earth ground	アース（P 用）		D	1	

PAPER EXIT SECTION

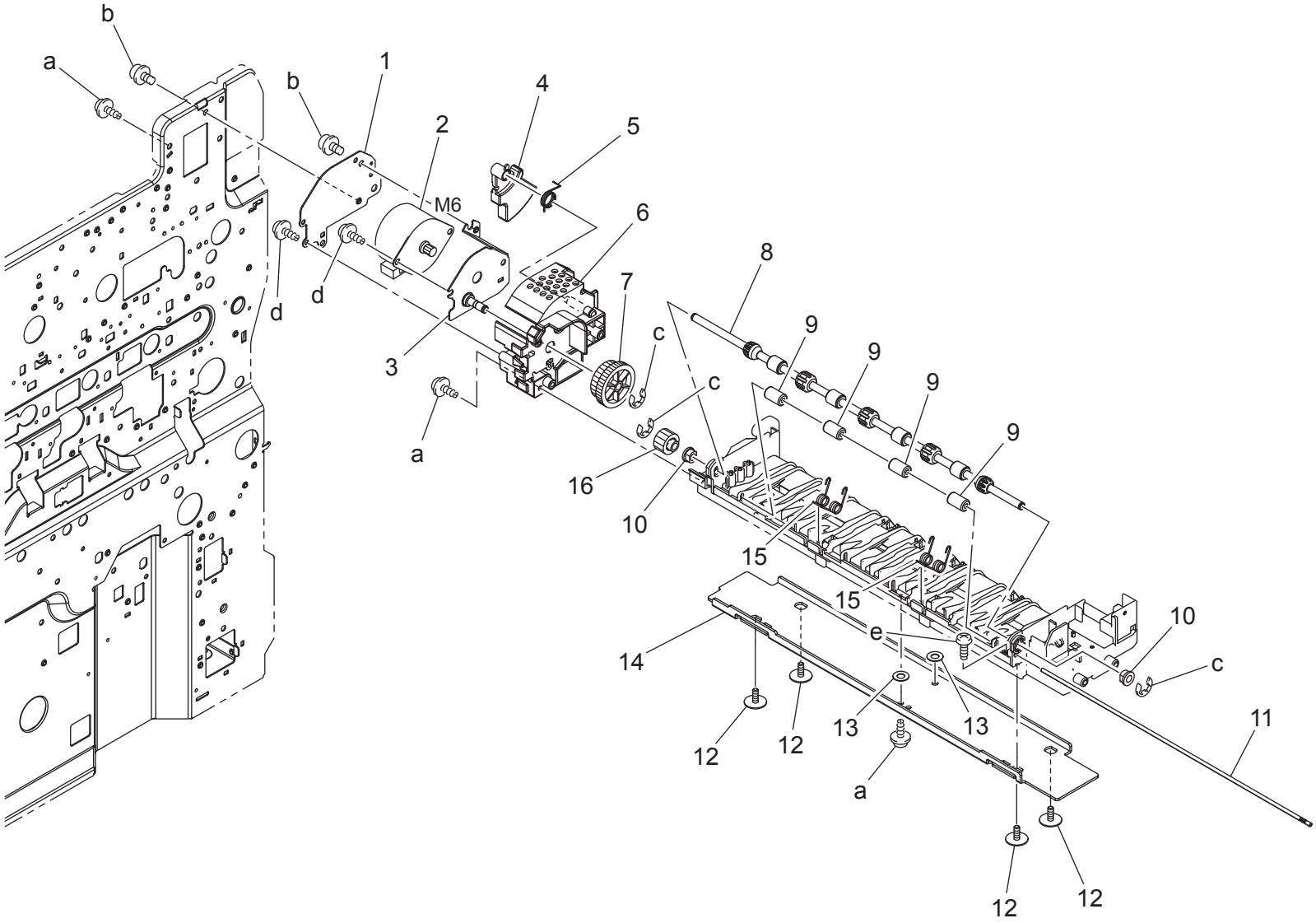

Key	Part No.	Description		Destinations	Class	QTY	Standard parts
1	A02E 8954 00	Bracket	取付板（排紙駆動２）		D	1	a-V153 0310 03
2	A02E M10C 01	Stepping motor	ステッピングモータ		C	1	b-V116 0306 03
3	A02E G213 00	Caulking Mounting Plate	取付板（排紙駆動）かしめ ＡＳＳＹ		D	1	c-V217 0400 01
4	A02E 8956 01	Lever	レバー（カバー閉め忘れ防止）		C	1	d-V153 0308 03
5	A02E 8957 01	Torsion spring	ねじりコイルばね		C	1	e-V145 0308 03
6	A02E 8950 00	Housing	ハウジング（排紙駆動）		D	1	
7	A02E 8951 00	Gear 36/59T	ギヤ ３６／５９ Ｔ		C	1	
8	A02E 8910 00	Roller	ローラ（第２排紙）		C	1	
9	4131 3904 02	ROLL	ころ		C	4	
10	4038 5860 01	BUSHING	軸受		C	2	
11	4025 5984 01	SHAFT	シャフト		D	1	
12	4163 5293 01	SCREW	ねじ		C	4	
13	A02E 8916 00	Spacer	スペーサ		C	2	
14	A02E 8903 00	Cover	カバー（排紙・下）		D	1	
15	A02E 8906 00	Torsion spring	ねじりコイルばね（第２排紙ローラー）		C	2	
16	A02E 8952 00	Gear 16T	ギヤ １６ Ｔ		C	1	

MAIN DRIVE SECTION

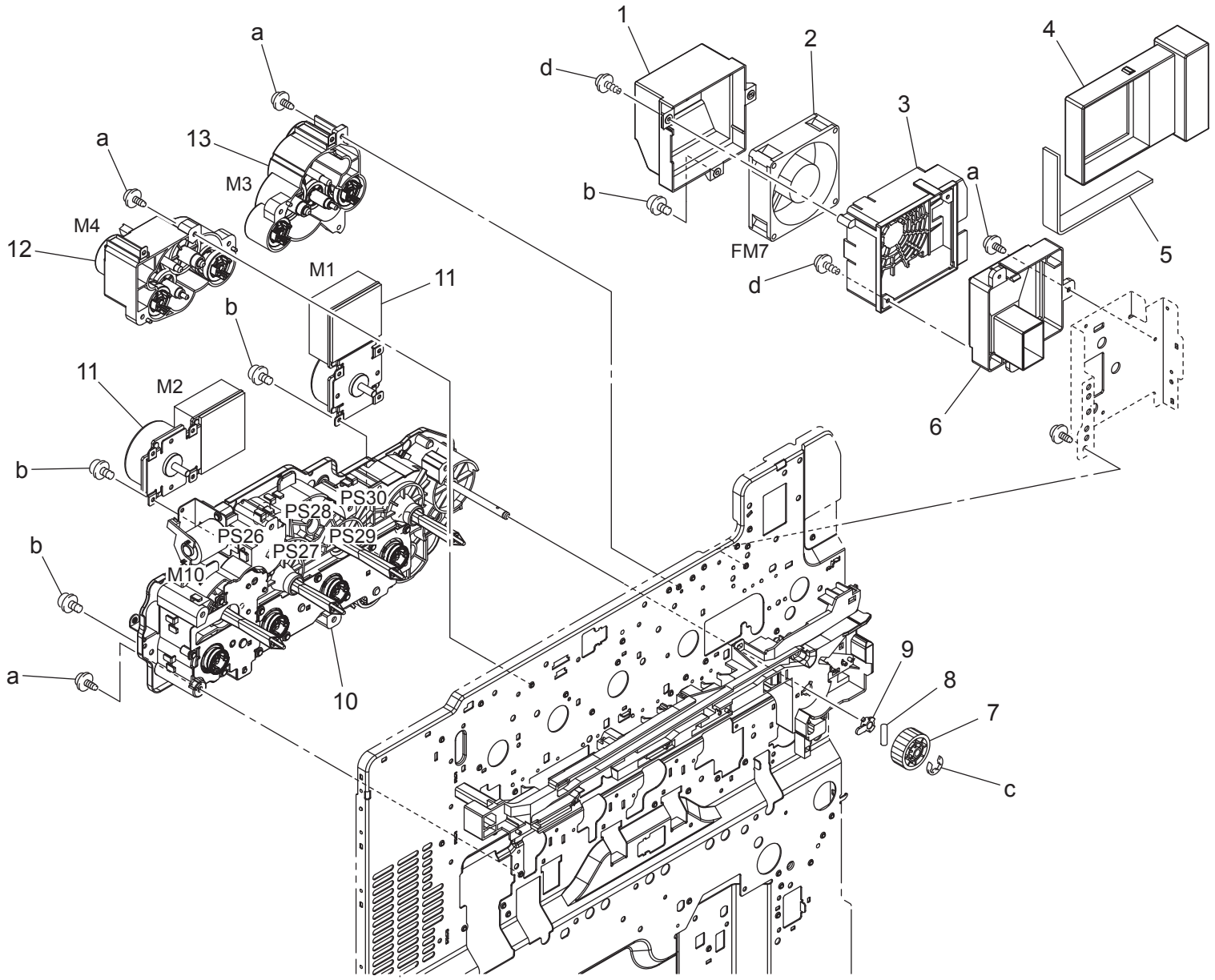

Key	Part No.	Description		Destinations	Class	QTY	Standard parts
1	A02E 1154 00	Duct	ダクト（臭気排気）		D	1	a-V137 0308 03
2	9J03 M100 00	FAN MOTOR	ファンモータ		B	1	b-V116 0308 03
3	A02E 1151 00	Duct	ダクト（臭気ファン取付）		D	1	c-V217 0400 01
4	A02E 1156 00	Holder	ホルダ（臭気フィルタ）		C	1	d-V153 0308 03
5	4038 2098 01	SEAL	シール		C	1	
6	A02E 1153 00	Duct	ダクト（臭気ＦＡＮ前）		D	1	
7	A02E 2518 00	Gear 36T	ギヤ　３６Ｔ		C	1	
8	A02E 2290 00	Pin	ピン		C	1	
9	A02E 1106 00	BUSHING	軸受（中転・内）		C	1	
10	A02E R715 00	Main Drive Assy	メイン駆動 ＡＳＳＹ		C	1	
11	A02E M103 00	Brushless motor	ブラシレスモーター		C	2	
12	A02E R711 00	Hopper Drive Assy 2	ホッパー駆動 ＡＳＳＹ　２		C	1	
13	A02E R710 00	Hopper Drive Assy 1	ホッパー駆動 ＡＳＳＹ　１		C	1	

FEED/TRANSPORT DRIVE SECTION

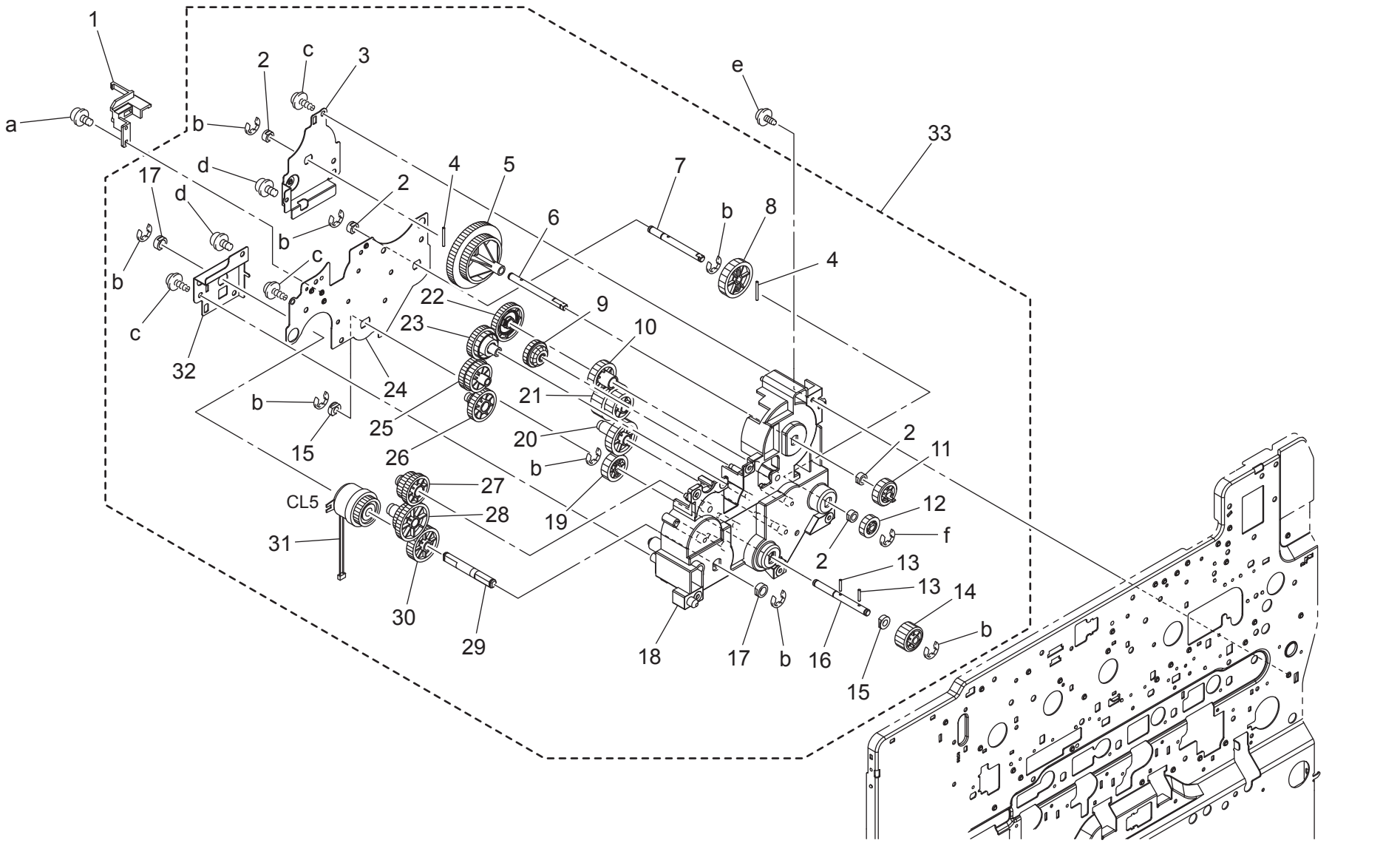

bizhub C353P

Key	Part No.	Description		Destinations	Class	QTY	Standard parts
1	4038 2275 01	HOLDER	ホルダ		D	1	a-V116 0308 03
2	1200 3121 09	BUSHING	シ゛クウケ		C	4	b-V217 0500 01
3	A02E 2597 00	Hold plate	保持板（給・搬駆動３）		D	1	c-V153 0410 03
4	A02E 2290 00	Pin	ピン		C	2	d-V116 0306 03
5	A02E 2513 00	Gear 83/115T	ギヤ　８３／１１５Ｔ		C	1	e-V137 0308 03
6	A02E 2524 00	Shaft	シャフト（連結・ＴＲ）		D	1	f-V217 0400 01
7	A02E 2535 02	Shaft	シャフト（連結・マル手）		D	1	
8	A02E 2599 00	Gear 32T	ギヤ　３２Ｔ		C	1	
9	4004 2545 01	GEAR 18/30T	ギヤ　１８／３０Ｔ		C	1	
10	A02E 2529 00	Gear 26T	ギヤ　２６Ｔ		C	1	
11	A02E 2519 00	Gear 22T	ギヤ　２２Ｔ		C	1	
12	A02E 2598 01	Gear 18T	ギヤ　１８Ｔ		C	1	
13	4131 2536 02	PIN	ピン		C	2	
14	A02E 2202 00	Gear 27T	ギヤ　２７Ｔ		C	1	
15	9J06 2101 00	BUSHING	軸受		C	2	
16	A02E 2515 00	Shaft	シャフト（連結・給紙）		D	1	
17	4658 3516 01	BUSHING	軸受		C	2	
18	A02E 2526 02	Holder	ホルダ（給・搬駆動）		D	1	
19	A02E 2201 00	Gear 23T	ギヤ　２３Ｔ		C	1	
20	A02E 2532 00	Gear 30T	ギヤ　３０Ｔ		C	1	
21	A02E 2531 00	Gear 24/32T	ギヤ　２４／３２Ｔ		C	1	
22	A02E 2520 01	Gear 65T	ギヤ　６５Ｔ		C	1	
23	4038 2578 01	GEAR 20/56T	ギヤ　２０／５６Ｔ		C	1	
24	A02E 2539 00	Hold plate	保持板（給・搬駆動２）		D	1	
25	A02E 2508 00	Gear 42/56T	ギヤ　４２／５６Ｔ		C	1	
26	A02E 2517 00	Gear 22/46T	ギヤ　２２／４６Ｔ		C	1	
27	A02E 2551 00	Gear 46/53T	ギヤ　４６／５３Ｔ		C	1	
28	A02E 2549 00	Gear 50/56T	ギヤ　５０／５６Ｔ		C	1	
29	A02E 2523 01	Shaft	シャフト（黒現像）		D	1	
30	A02E 2514 00	Gear 50T	ギヤ　５０Ｔ		C	1	
31	A02E M203 00	Clutch	クラッチ		C	1	
32	A02E 2536 00	Hold plate	保持板（給・搬駆動１）		D	1	
33	A02E R712 00	Feed/Transport Drive Assy	給紙／搬送駆動 ＡＳＳＹ		C	1	

FUSING DRIVE SECTION

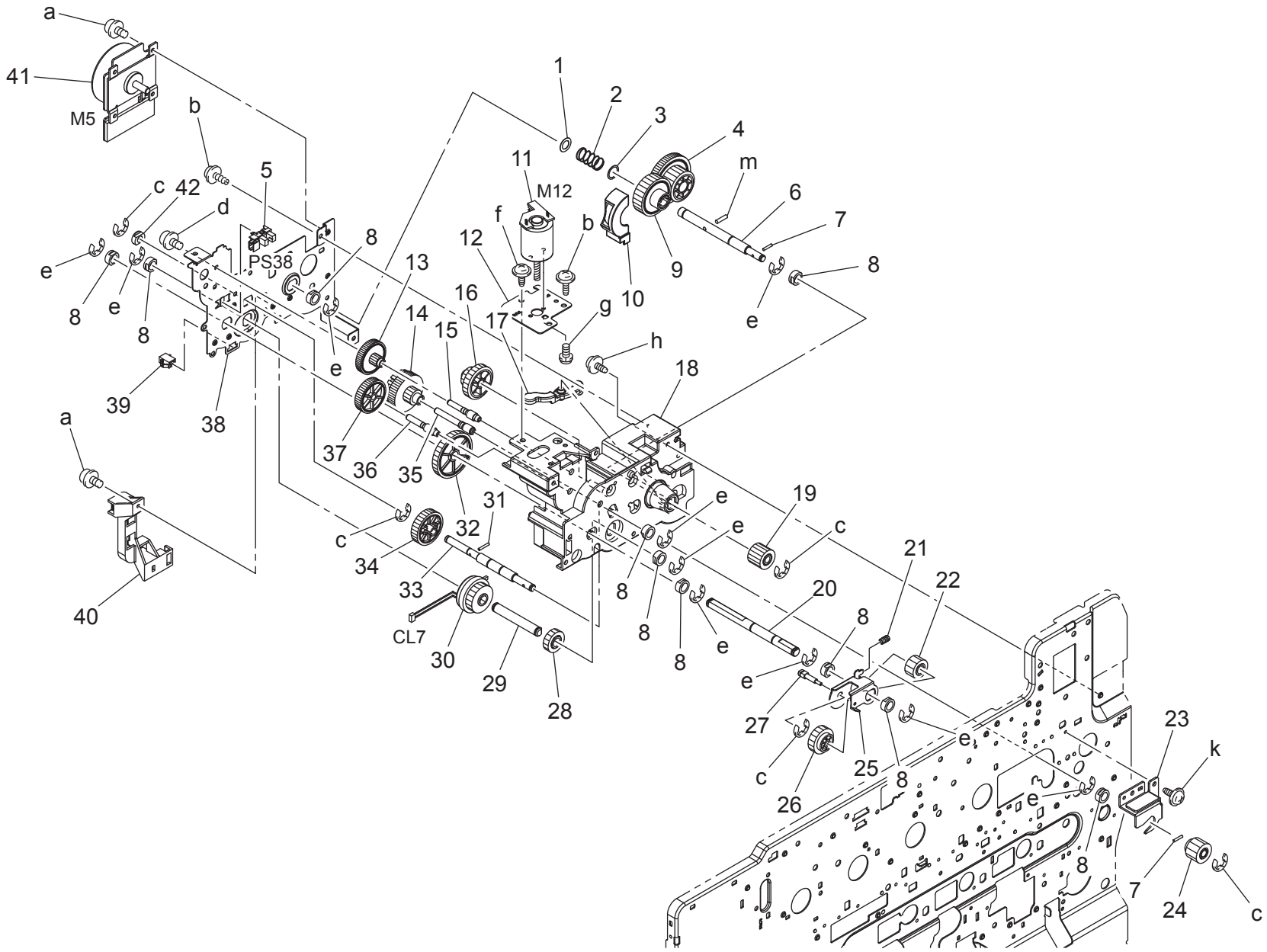

Key	Part No.	Description		Destinations	Class	QTY	Standard parts
1	A02E 2303 00	Washer	ワッシャ（定着２）		C	1	a-V116 0306 03
2	A02E 2585 00	Pressure spring	圧縮コイルばね（駆動解除）		C	1	b-V153 0308 03
3	A02E 2302 00	Washer	ワッシャ（定着１）		C	1	c-V217 0400 01
4	A02E 2570 00	Gear 27/85T	ギヤ　２７／８５ Ｔ		C	1	d-V116 0308 03
5	9335 1300 61	PHOTO INTERRUPTER	フォトインタラプタ		B	1	e-V217 0600 01
6	A02E 2573 00	Shaft	シャフト（定着）		D	1	f-V137 0308 03
7	1144 5200 01	PIN	ピン		D	2	g-V115 2605 03
8	4658 3516 01	BUSHING	軸受		C	10	h-4154 3804 01
9	A02E 2571 00	Gear 34T	ギヤ　３４ Ｔ		C	1	k-V137 0306 03
10	A02E 2582 00	Holder	ホルダ（駆動解除）		D	1	m-V231 3012 50
11	A02E R714 00	Motor Assy	モータ ＡＳＳＹ		C	1	
12	A02E 2310 11	Bracket	取付板（ＤＣ モータ・定着離間）		D	1	
13	A02E 2542 00	Gear 18/75T	ギヤ　１８／７５ Ｔ		C	1	
14	A02E 2544 00	Gear 17/68T	ギヤ　１７／６８ Ｔ		C	1	
15	A02E 2314 00	Shaft	シャフト（定着離間１）		D	1	
16	A02E 2591 00	Gear 16/29T	ギヤ　１６／２９ Ｔ		C	1	
17	A02E 2584 01	Lever	レバー（駆動解除）		C	1	
18	A02E 2557 12	Holder	ホルダ（定着駆動）		D	1	
19	9J06 2574 01	GEAR 16T	ギヤ　１６ Ｔ		C	1	
20	A02E 2587 00	Shaft	シャフト（一次離間２）		D	1	
21	9J06 2595 02	PRESSURE SPRING	圧縮コイルばね		C	1	
22	4038 2580 01	GEAR 16T	ギヤ　１６ Ｔ		C	1	
23	A02E 2312 00	Hold plate	保持板（定着離間）		D	1	
24	9J06 2546 01	GEAR 13T	ギヤ　１３ Ｔ		C	1	
25	A02E 2576 01	Bracket	取付板（一次離間）		D	1	
26	9J06 2575 01	GEAR 22T	ギヤ　２２ Ｔ		C	1	
27	A02E 2594 00	Shaft	シャフト（一次離間３）		D	1	
28	4038 2592 01	GEAR 18T	ギヤ　１８ Ｔ		C	1	
29	A02E 2596 00	Shaft	シャフト（一次離間１）		D	1	
30	A02E M200 00	Clutch	クラッチ		C	1	
31	4131 2536 02	PIN	ピン		C	1	
32	4038 2593 02	GEAR 41T	ギヤ　４１ Ｔ		C	1	
33	A02E 2563 00	Shaft	シャフト（定着離間）		D	1	
34	A02E 2545 00	Gear 40T	ギヤ　４０ Ｔ		C	1	
35	A02E 2316 00	Shaft	シャフト（定着離間３）		D	1	
36	A02E 2315 00	Shaft	シャフト（定着離間２）		D	1	
37	9J06 2543 01	GEAR 60T	ギヤ　６０ Ｔ		C	1	
38	A02E 2556 12	Bracket	取付板（定着駆動）		D	1	
39	V818 6000 14	PLUG HOUSING	角型プラグコネクタ		D	1	
40	9J06 2572 01	HOLDER	ホルダ		D	1	
41	A02E M100 00	Brushless motor	ブラシレスモータ		C	1	
42	9J06 2101 00	BUSHING	軸受		C	1	

MAIN FRAME SECTION

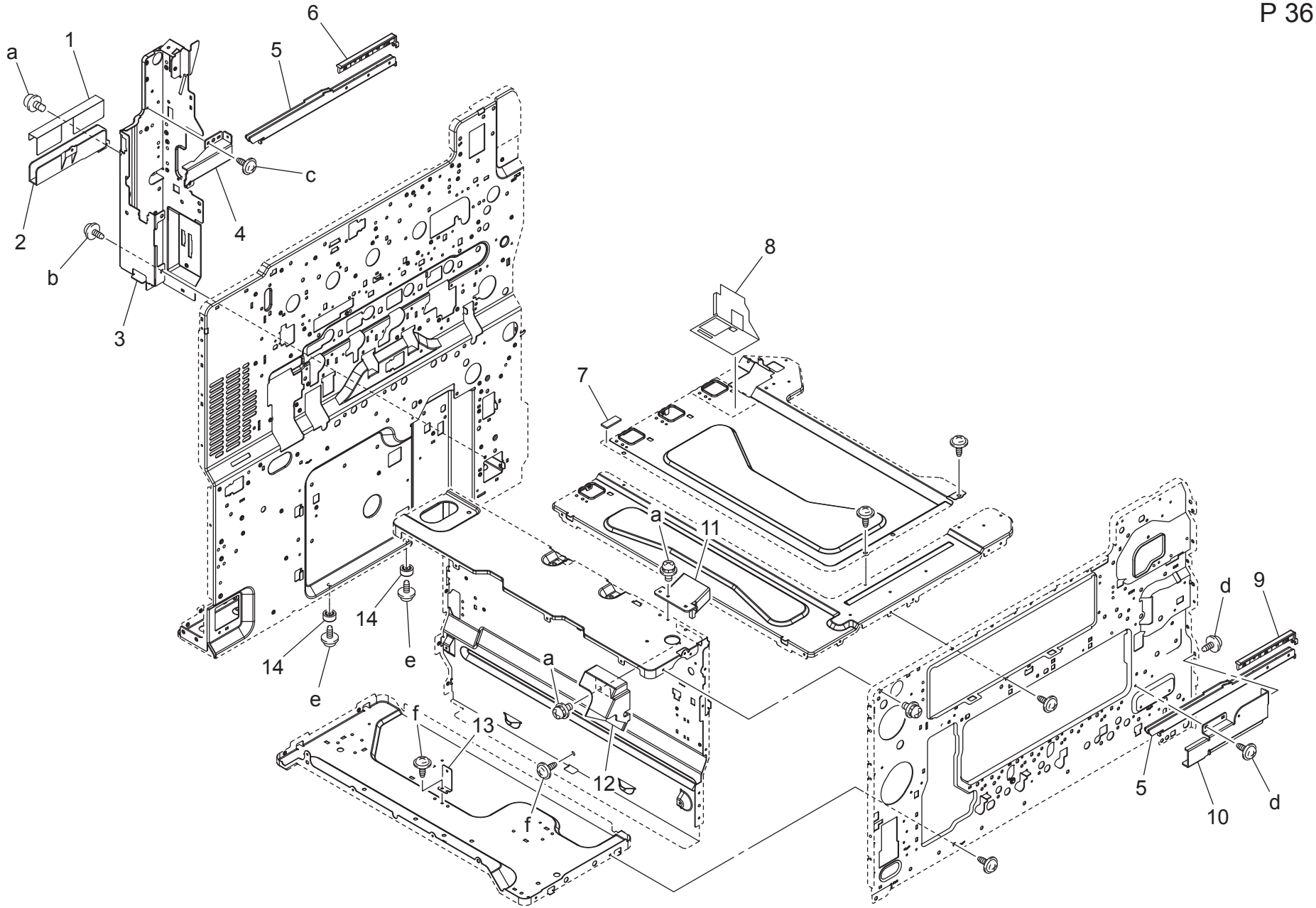

Key	Part No.	Description		Destinations	Class	QTY	Standard parts
1	A02E 1194 00	Insulating member	絶縁材		C	1	a-V116 0308 03
2	A02E 1193 00	Guide	ガイド（取手・Ｒ）		D	1	b-V137 0306 03
3	A02E 1192 01	Bracket	取付板（取手）		D	1	c-V137 0308 03
4	A02E 1191 00	Reinforce plate	補強板（取手）		D	1	d-4154 3804 01
5	A02E 1190 01	Handle	取手		D	2	e-V137 0310 03
6	A02E 1196 00	Cap	キャップ（取手・Ｒ）		C	1	f-4106 2063 01
7	4039 2209 01	SEAL	シール		C	1	
8	A02E 1207 00	Seal	シール（ＴＣ 補給 Ｋ）		C	1	
9	A02E 1195 00	Cap	キャップ（取手・Ｆ）		C	1	
10	A02E 1382 00	Bracket	取付板（１次 ＳＷ）		D	1	
11	A02E 1206 01	Duct	ダクト（噴煙排気・ＴＣ）		D	1	
12	A02E 1201 00	Duct	ダクト（粉煙排気 ＴＣ 吹付）		D	1	
13	A02E 1014 00	Bracket	取付板（下台板）		D	1	
14	0996 3055 01	RUBBER FOOT	コ゛ムアシ		C	2	

LOWER FRAME SECTION

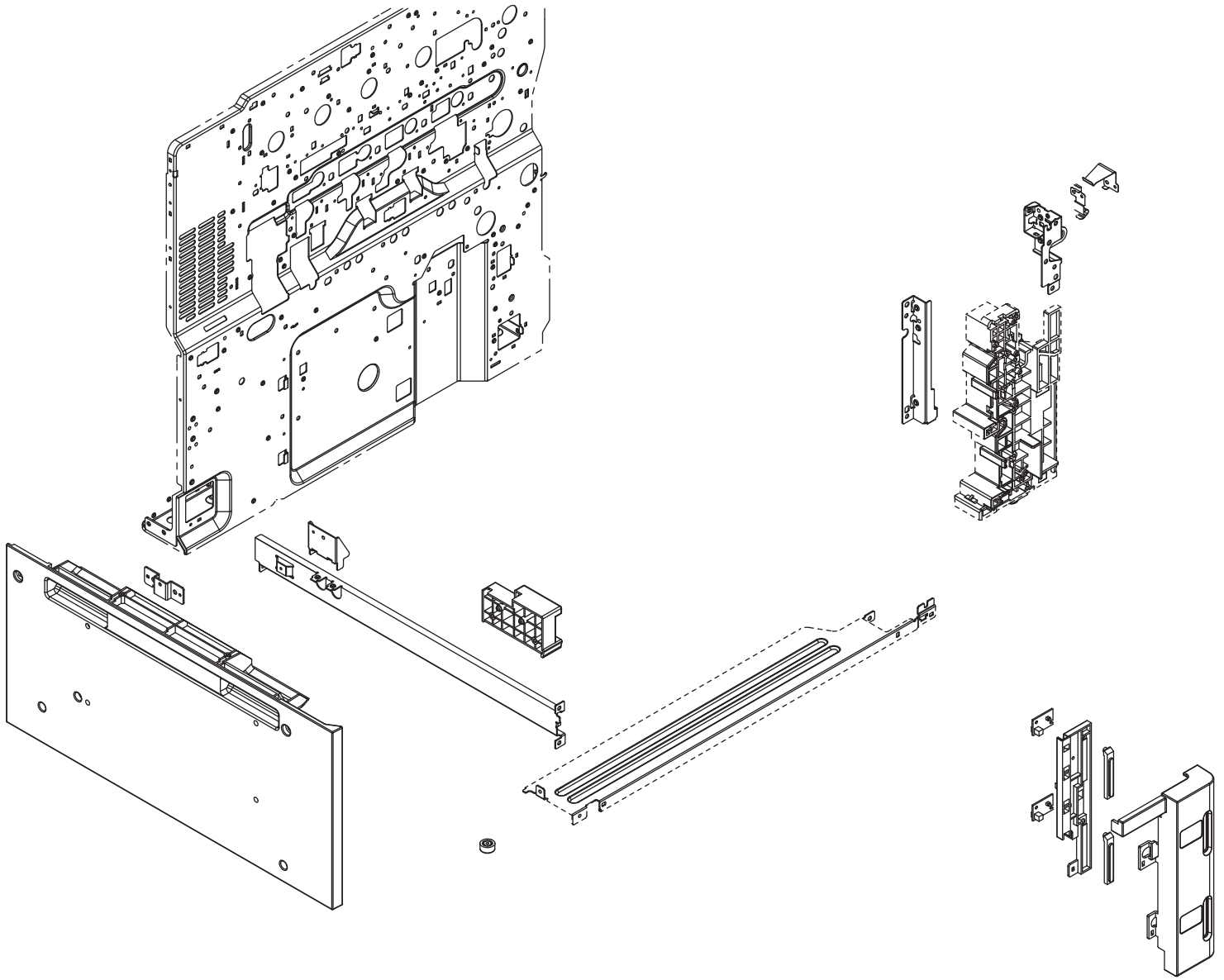

Key	Part No.	Description		Destinations	Class	QTY	Standard parts
1	9313 1000 72	FAN MOTOR	ファンモータ		C	1	a-V116 0335 03
2	A02E 1173 00	Seal	シール（オゾンファン）		C	1	b-V153 0308 03
3	A02E 1175 01	Bracket	取付板（オゾンファン）		D	1	c-4154 3804 01
4	A02E R727 00	Ozone Filter	オゾンフィルタ		C	1	d-V137 0306 03
5	A02E 1172 00	Duct	ダクト（オゾン２）		D	1	e-V137 0308 03
6	4038 2062 01	SEAL	シール		C	1	f-V153 0408 03
7	A02E 6228 01 Old	Plate spring	板ばね		D	2	g-V137 0408 03
7	A02E 6228 12	Plate Spring	板ばね		D	2	h-V137 0310 03
8	A02E 6225 01 Old	Spacer	スペーサ		D	2	k-V137 0410 04
8	A02E 6225 12	Spacer	スペーサ		D	2	
9	A02E 1009 02	Rail	レール（カセット右上）		D	2	
10	A02E 1029 00	Bracket	取付板（右・前）		D	1	
11	4038 2099 01	CONTACT	接点		D	1	
12	4038 3541 01	PLATE SPRING	板ばね		D	1	
13	A02E 1013 01	Bracket	取付板（支点・前）		D	1	
14	A02E 1049 01	Stopper	ストッパ（カセット）		D	2	
15	A02E 1008 01	Rail	レール（カセット・左）		C	1	
16	A00J H00D 00	PWB Assembly LED1	基板 ＡＳＳＹ　ＬＥＤ １		C	2	
17	A02E 1634 00	Holder	ホルダ（ライトガイド）		D	1	
18	A00J 1681 02	Lens /A	レンズ／ Ａ		C	2	
19	A02E 1642 00	Shield plate	遮光板		C	2	
20	A02E 1631 02	Cover	カバー（カセット　ｉｎｆｏ）		C	1	
21	A02E 9418 00	Label Number 1	ラベル　段数表示１		C	1	
22	A02E 9419 00	Label Number 2	ラベル　段数表示２		C	1	
23	A02E N110 01	Indicating Wiring	表示束線		D	1	
24	0996 3055 01	RUBBER FOOT	コ゛ムアシ		C	1	
25	A02E 1015 01	Rail	レール（カセット・左前）		D	1	
26	A02E 1017 02	Rail	レール（左板）		D	1	
27	A02E 1007 00	Rail	レール（取付板）		D	1	
28	A02E 1021 00	Plate nut	板ナット		D	1	
29	4038 2162 02	CUSHION	クッション		C	2	

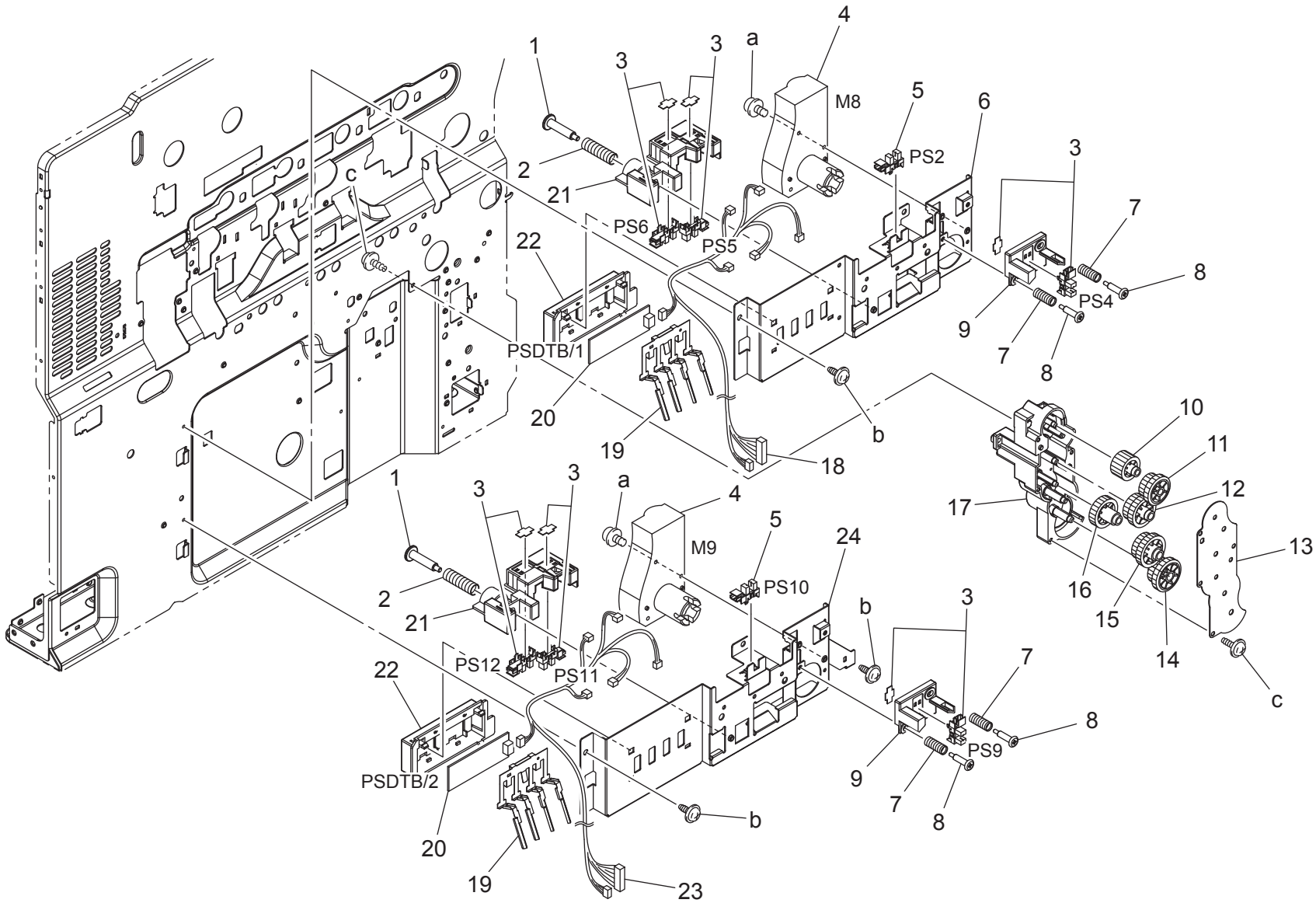
1
2
21
3
3
a
4
M8
5
PS2
6
3
7
8
9
7
8
PS4
PS6
PS5
22
PSDTB/1
20
19
18
b
c
10
11
12
13
14
15
16
17
1
2
21
3
3
a
4
M9
5
PS10
24
b
3
7
8
9
7
8
PS9
PS12
PS11
22
PSDTB/2
20
19
b
23

Key	Part No.	Description		Destinations	Class	QTY	Standard parts
1	4002 3131 01	SHOULDER SCREW	段ねじ		C	2	a-V116 0330 03
2	4002 3110 01	PRESSURE SPRING	圧縮コイルばね		C	2	b-V137 0306 03
3	4037 0906 01	PHOTO INTERRUPTER	フォトインタラプター		B	6	c-V153 0308 03
4	9J06 M103 00	MOTOR	マグネットモータ		B	2	
5	9335 1300 61	PHOTO INTERRUPTER	フォトインタラプタ		B	2	
6	A02E 5721 00	Bracket	取付板		D	1	
7	4030 3081 01	PRESSURE SPRING	圧縮コイルばね		C	4	
8	4030 3224 02	SHOULDER SCREW	段ねじ		C	4	
9	4030 3083 01	HOLDER	ホルダ		D	2	
10	A02E 2204 00	Gear 25T	ギヤ　２５Ｔ		C	1	
11	A02E 2205 00	Gear 24/24T	ギヤ　２４／２４Ｔ		C	1	
12	A02E 2206 00	Gear 27/32T	ギヤ　２７／３２Ｔ		C	1	
13	A02E 2211 00	Hold plate	保持板（２ｎｄ給紙駆動ー１）		D	1	
14	A02E 2209 00	Gear 26/27T	ギヤ　２６／２７Ｔ		C	1	
15	A02E 2208 00	Gear 27/34T	ギヤ　２７／３４Ｔ		C	1	
16	A02E 2207 00	Gear 31T	ギヤ　３１Ｔ		C	1	
17	A02E 2210 00	Holder	ホルダ（２ｎｄ給紙駆動ー１）		D	1	
18	A02E N10C 00	Paperfeed Wiring /1	給紙束線／１		D	1	
19	4030 3091 01	LEVER	レバー		C	2	
20	4037 0104 01	PWB ASSY	基板ＡＳＳＹ		C	2	
21	4030 3047 02	HOLDER	ホルダ		D	2	
22	4011 3012 01	HOLDER	ホルダ		D	2	
23	A02E N10D 00	Paperfeed Wiring /2	給紙束線／２		D	1	
24	A02E 5831 00	Bracket	取付板		D	1	

HIGH VOLTAGE UNIT

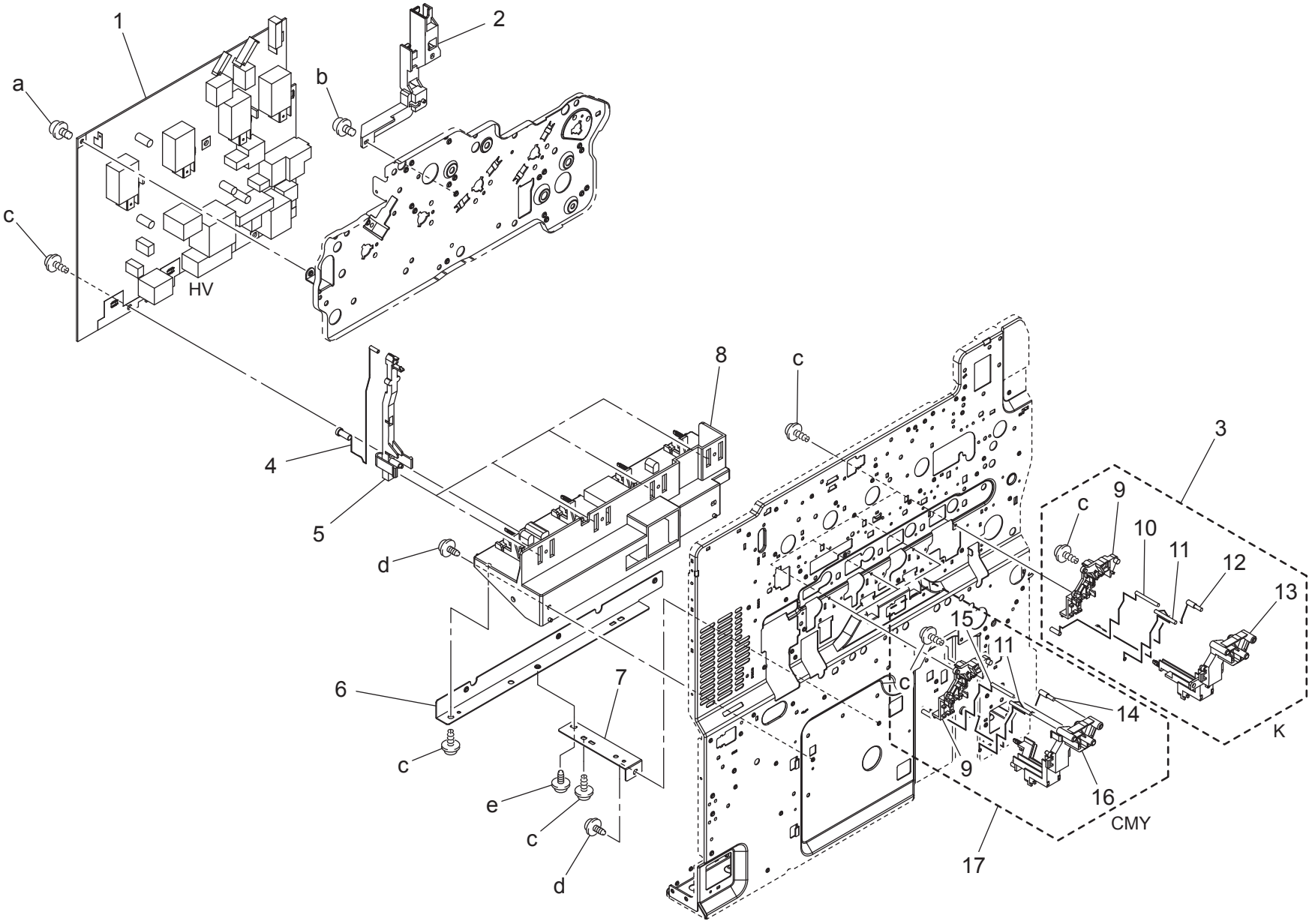

Key	Part No.	Description		Destinations	Class	QTY	Standard parts
1	A02E M402 01	High voltage unit	高圧電源		I	1	a-V116 0308 03 b-V116 0306 03 c-V153 0308 03 d-V137 0308 03 e-V137 0306 03
2	A02E 1329 00	Guide	ガイド（ＨＶ ハーネス）		D	1	
3	A02E R700 00	IU Contact Assy Black	ＩＵ 接点 ＡＳＳＹ　Ｋ		C	1	
4	4038 2222 01	CONTACT	接点		C	4	
5	4038 2233 02	HOLDER	ホルダ		D	4	
6	A02E 1322 00	Bracket	取付板（ＨＶ ホルダアース１）		D	1	
7	A02E 1328 00	Bracket	取付板（ＨＶ ホルダアース２）		D	1	
8	A02E 1321 01	Bracket	取付板（ＨＶ ホルダ）		D	1	
9	A02E 1327 00	Cover	カバー（高圧ホルダ）		D	4	
10	4038 2203 01	CONTACT	接点		C	1	
11	4038 2225 02	CONTACT	接点		C	4	
12	A02E 1332 00	Contact	接点（Ｇ＿ＢＫ）		C	1	
13	A02E 1323 01	Holder	ホルダ（高圧 ＢＫ）		D	1	
14	A02E 1333 00	Contact	接点（Ｇ＿Ｃ）		C	3	
15	4038 2276 01	CONTACT	接点		C	3	
16	A02E 1324 00	Holder	ホルダ（高圧 Ｃ）		D	3	
17	A02E R732 00	IU Contact Assy CMY	ＩＵ 接点 Ａｓｓｙ　ＣＭＹ		C	3	

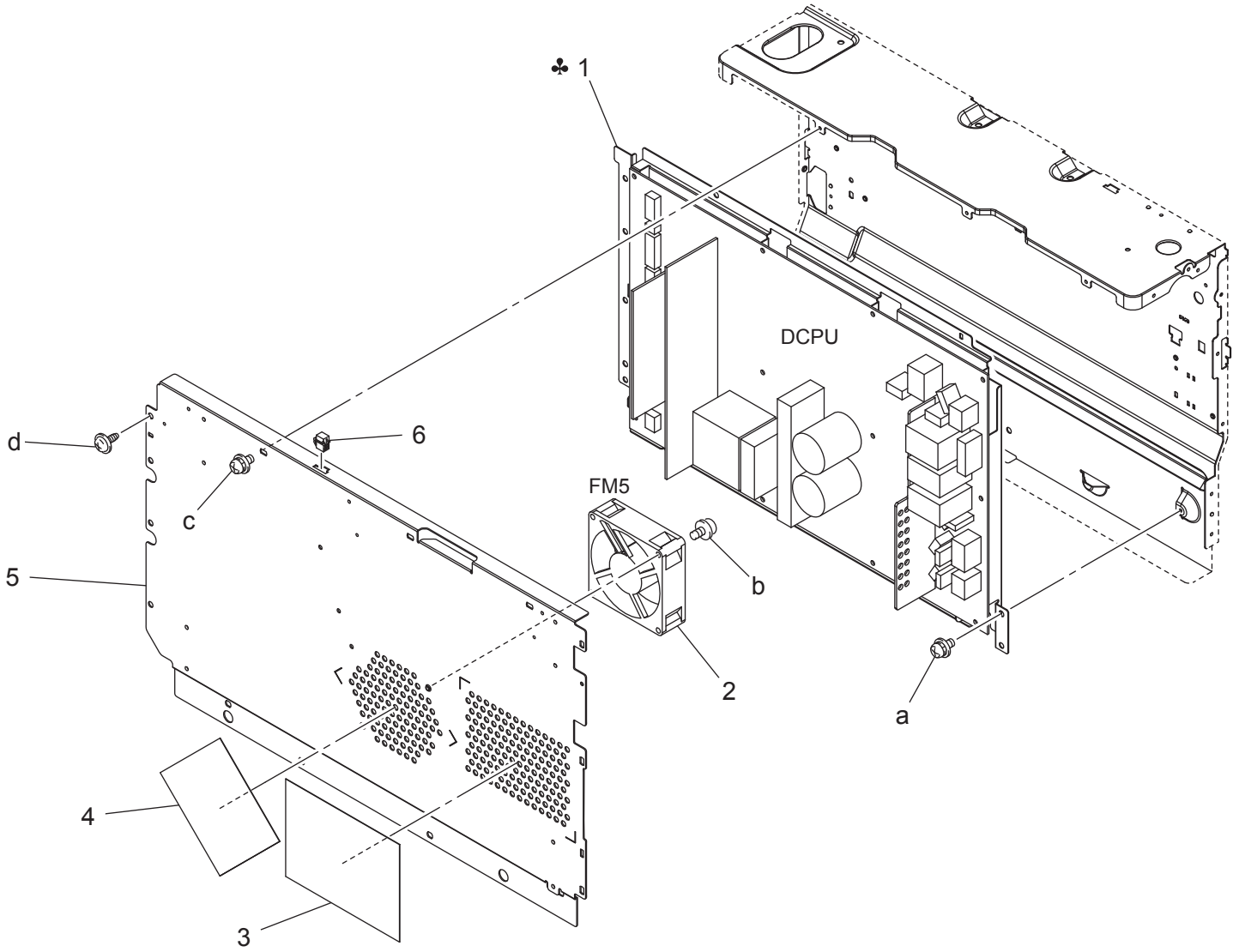
♣ 1
DCPU
d
6
c
FM5
5
b
2
a
4
3

Key	Part No.	Description		Destinations	Class	QTY	Standard parts
1	A02E M400 01	Power supply	低圧電源（１００Ｖ）	A,A1,B,G2	I	1	a-V116 0306 03
1	A02E M401 01	Power supply	低圧電源（２００Ｖ）	C	I	1	b-V116 0330 03
2	A02E M108 01	Fan motor	ファンモータ		C	1	c-V116 0308 03
3	A02E 1483 00	Filter	フィルタ（機内吸気）		C	1	d-V137 0306 03
4	A02E 1484 00	Filter	フィルタ（電源吸気）		C	1	
5	A02E 1480 03	Shield	シールド（ＬＶ）		D	1	
6	V818 6000 15	PLUG HOUSING	角型プラグコネクタ		D	1	

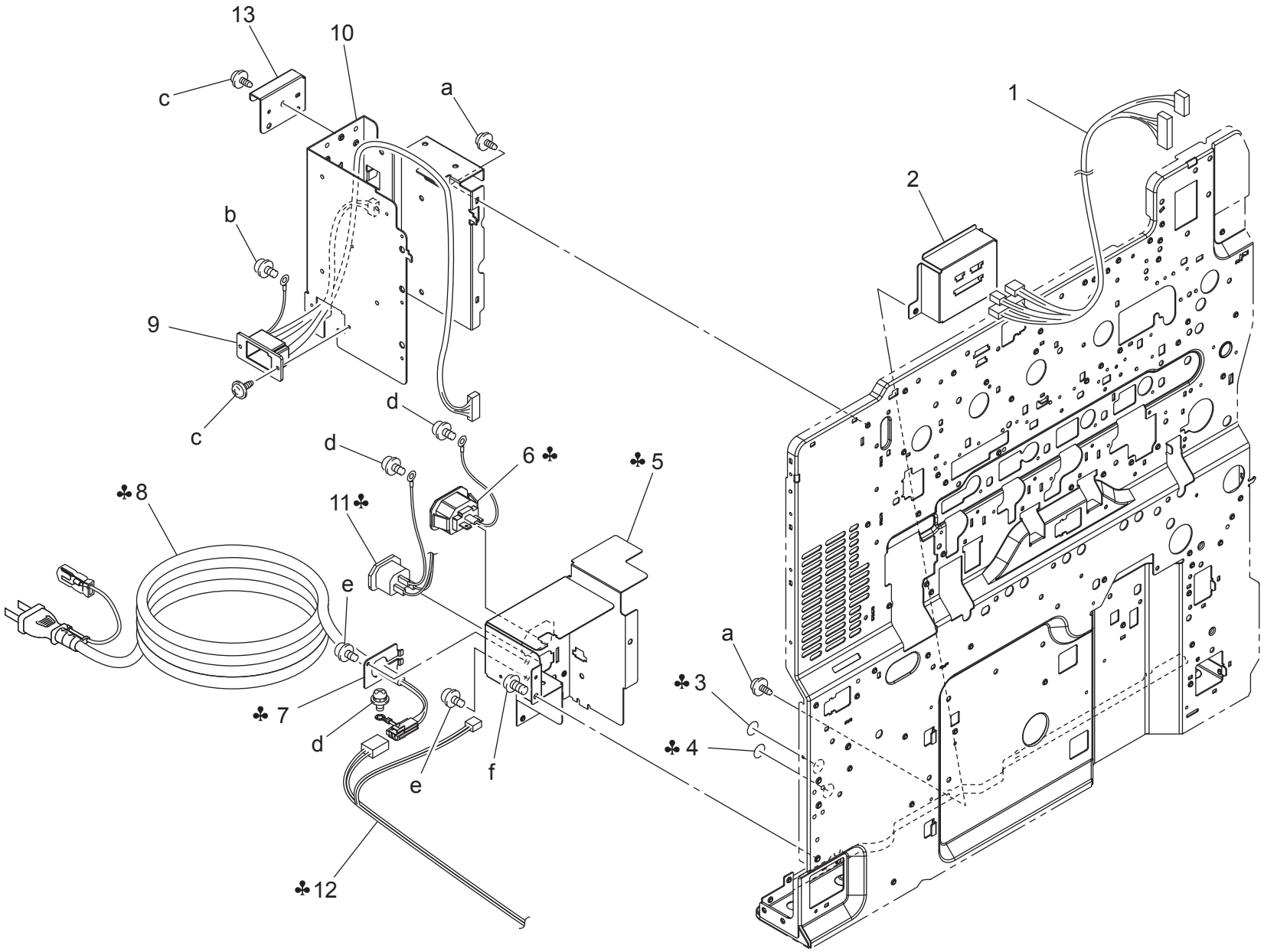
13
10
c
a
1
2
b
9
c
d
d
6 ♣
♣ 5
♣ 8
11 ♣
e
a
♣ 3
♣ 7
d
♣ 4
e
f
♣ 12

Key	Part No.	Description		Destinations	Class	QTY	Standard parts
1	A02E N10J 00	PFU Relay harness	ＰＦＵ 中継束線		D	1	a-V137 0306 03
2	A02E 1472 01	Bracket	取付板（キャビ ＣＮ）		D	1	b-V116 0308 03
3	9J06 7301 01	LABEL	ラベル	A,A1	D	1	c-V137 0308 03
4	9J06 7302 01	LABEL	ラベル	C	D	1	d-V116 0408 03
5	A02E 1471 01	Bracket	取付板（インレット・１００系）	A,A1,B,G2	D	1	e-V116 0306 03
5	A02E 1493 01	Bracket	取付板（インレット・２００系）	C	D	1	f-V118 0306 03
6	A02E N125 01	Power supply Wiring	給電束線	C	D	1	
7	4037 2239 02	BRACKET	取付板	A,A1	D	1	
8	4037 0775 01	POWER CORD	電源コード	A,A1	D	1	
9	A02E N10E 00	FNS Relay harness	ＦＮＳ 中継束線		C	1	
10	A02E 1252 01	Frame	フレーム（ＩＲ 支柱・左後）		D	1	
11	A02E N121 02	AC Wiring /120V	ＡＣ 束線／１２０Ｖ	B,G2	D	1	
11	A02E N124 01	AC Wiring /230V	ＡＣ 束線／２３０Ｖ	C	D	1	
12	A02E N120 01	AC Wiring /100V	ＡＣ 束線／１００Ｖ	A,A1	D	1	
13	A02E 1498 00	Bracket	取付板（Ｐ 版・後上カバー）		D	1	

REAR FAN SECTION

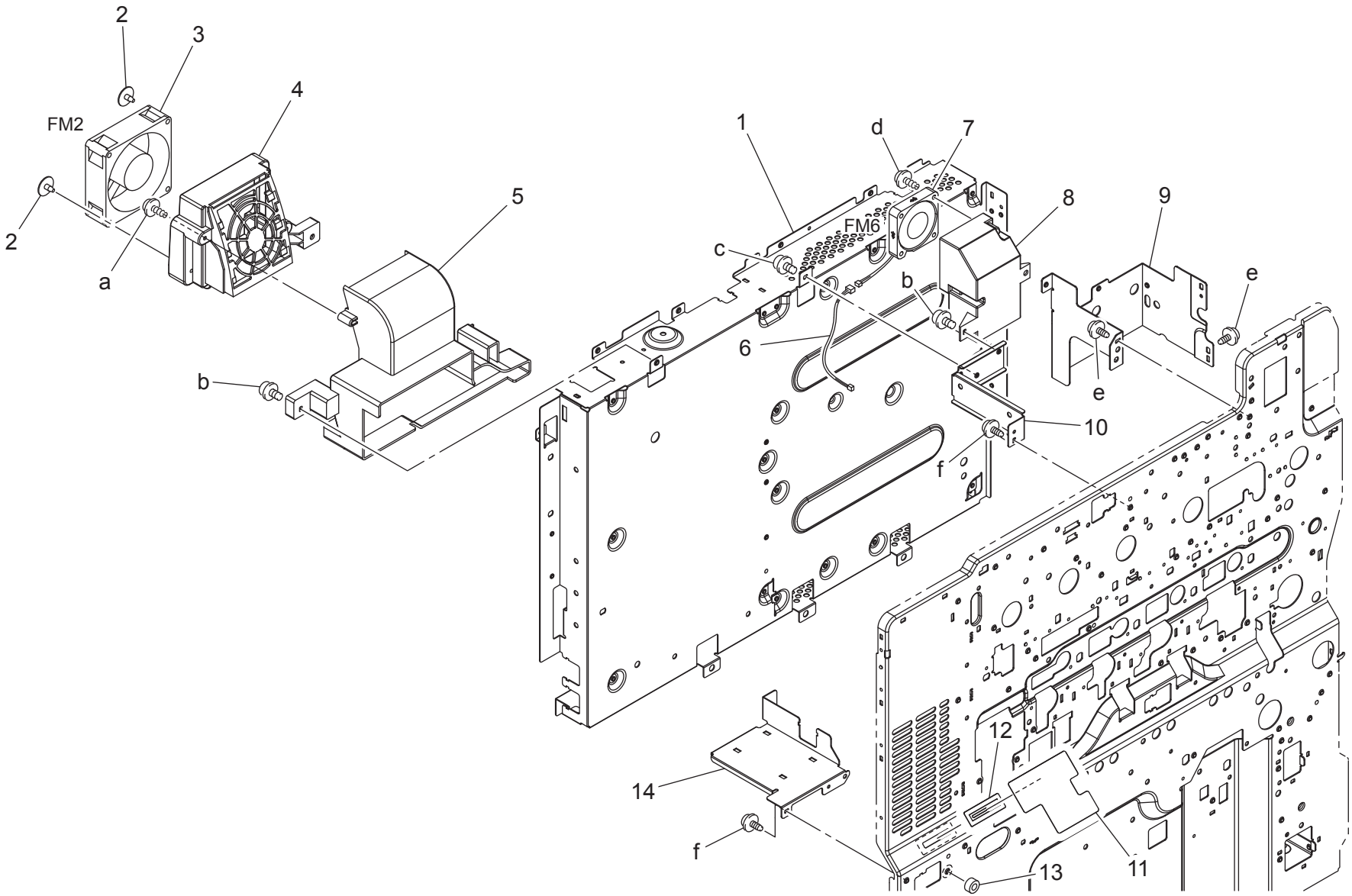

Key	Part No.	Description		Destinations	Class	QTY	Standard parts
1	A02E 1451 01	Shield box	シールドボックス		D	1	a-V153 0308 03
2	4163 5293 01	SCREW	ねじ		C	2	b-V116 0308 03
3	9J03 M100 00	FAN MOTOR	ファンモータ		B	1	c-V116 0306 03
4	A02E 1149 01	Duct	ダクト（背面排気１・１ Ｐ）		D	1	d-V153 0316 03
5	A02E 1150 00	Duct	ダクト（背面排気２・１ Ｐ）		D	1	e-V137 0308 03
6	A02E N111 01	Cooling Wiring /C	冷却束線／ Ｃ		D	1	f-V137 0306 03
7	9313 1400 31	FAN MOTOR	ファンモータ		C	1	
8	A02E 1487 00	Duct	ダクト（ＭＦＰ 冷却）		D	1	
9	A02E 1454 01	Bracket	取付板（シールドボックス上）		D	1	
10	A02E 1456 00	Bracket	取付板（ハーネスガイド）		D	1	
11	A02E 1457 01	Seal	シール（ＦＣＣ ハーネス保護）		C	1	
12	A02E 1458 00	Cover	カバー（エッジ保護）		C	1	
13	1154 4670 01	PROTECTION	保護材		C	1	
14	A02E 1462 00	Bracket	取付板（ＦＣＣ 用）		D	1	

SHIELD BOX SECTION

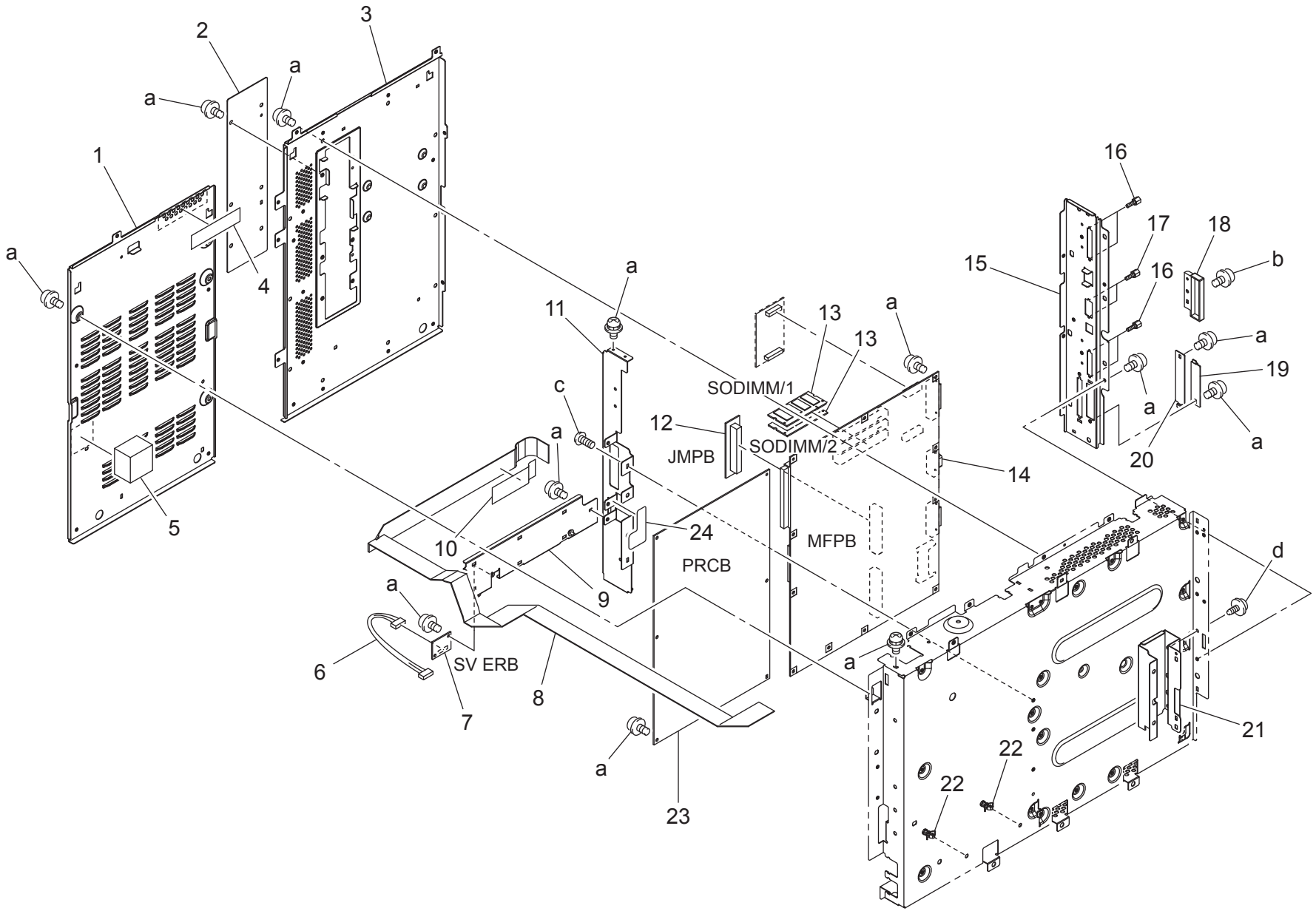

Key	Part No.	Description		Destinations	Class	QTY	Standard parts
1	A02E 1625 00	Rear cover	後カバー		C	1	a-V116 0306 03
2	A02E 1627 00	Cover	カバー		C	1	b-V116 0308 03
3	A02E 1626 00	Cover	カバー（後・ＭＦＰ）		C	1	c-V118 0306 03
4	A02E 1142 00	Filter	フィルタ（背面吸気・下）		C	1	d-V137 0306 03
5	A02E 1400 00	Cushion	クッション（ＦＦＣ ケーブル）		C	1	
6	A02E N118 00	Memory Wiring	メモリ束線		D	1	
7	A02E H002 01	PWB assembly (PWB-EE1 ASSY)	基板 ＡＳＳＹ		C	1	
8	A02E N10T 01	ImageProcessing Flatcable	画像処理フラットケーブル		C	1	
9	A02E 1461 00	Guide	ガイド（ＦＣＣ ハーネス）		D	1	
10	A02E 1401 00	Guide	ガイド（ＦＦＣ ケーブル）		C	1	
11	A02E 1452 00	Reinforce plate	補強板（シールドボックス）		D	1	
12	A02E H343 00	PWB assembly(PWB-JMP ASSY)	基板 ＡＳＳＹ（ＰＷＢ－ＪＭＰ ＡＳＳＹ）		C	1	
13	V865 3000 14	MEMORY MODULES	ＭＥＭＯＲＹ ＭＯＤＵＬＥＳ		C	2	
14	A02E H341 06	PWB assembly (PWB-MFP ASSY)	基板 ＡＳＳＹ（ＰＷＢ－ＭＦＰ ＡＳＳＹ）		I	1	
15	A02E 1453 00	Bracket	取付板（外端板）		D	1	
16	A00J 1396 00	Screw	ねじ		C	4	
17	4025 2283 01	SCREW	ねじ		D	2	
18	A02E 1490 00	Cover	カバー（コネクタ）		D	1	
19	A02E 1491 00	Cover	カバー（ＣＦ コネクタ）		D	1	
20	A02E 1492 00	Cover	カバー（Ｉ ／ Ｆ 基板）		D	1	
21	A02E 1465 01	Bracket	取付板（ＢＯＸ・右）		D	1	
22	V502 0100 36	spacer	サーキットボードスペーサー		D	2	
23	A02E H001 06	PWB assembly (PWB-MC ASSY)	基板 ＡＳＳＹ		I	1	
24	A02E 1497 00	Seal	シール		C	1	

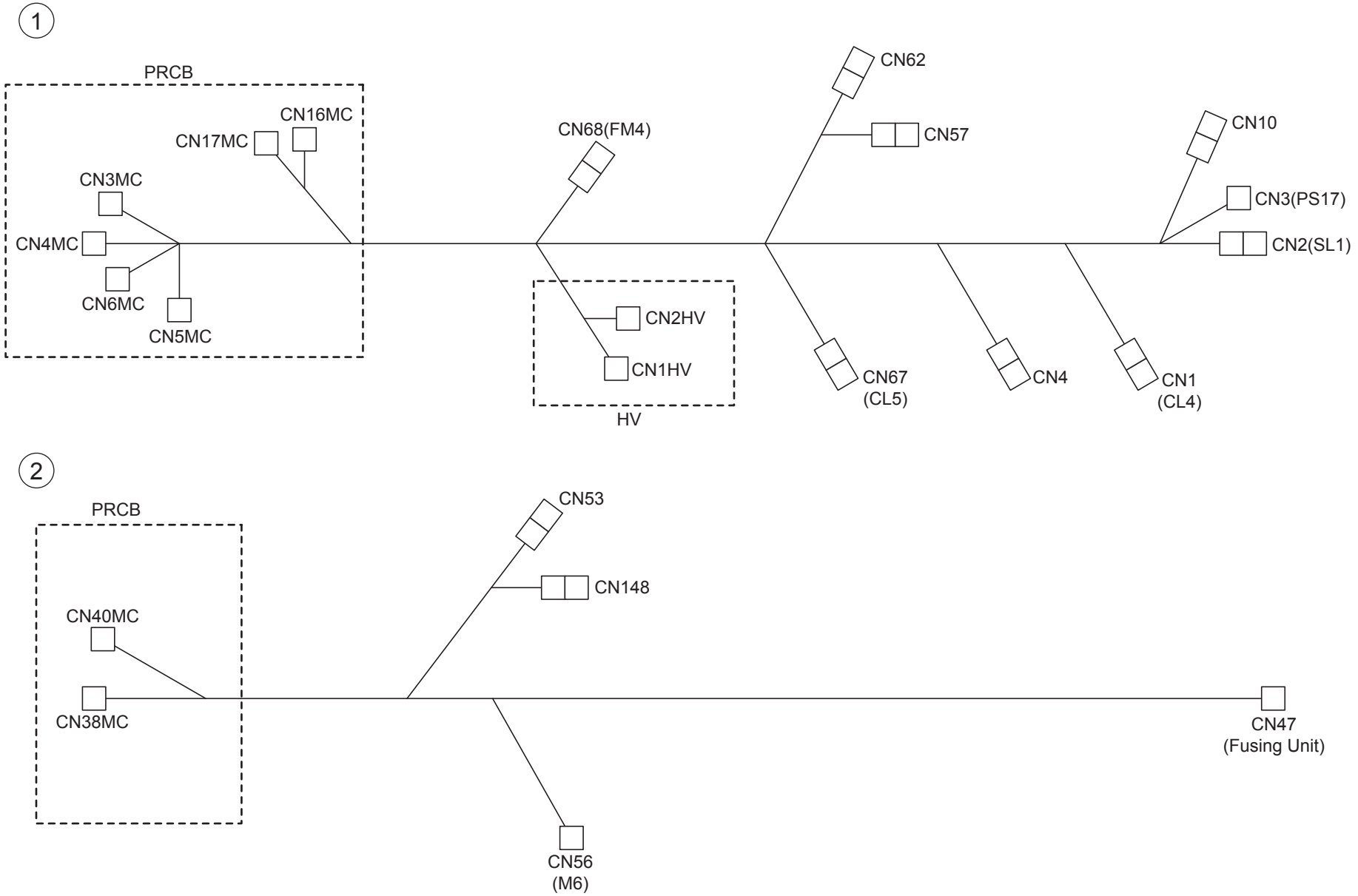
1
PRCB
CN16MC
CN17MC
CN3MC
CN4MC
CN6MC
CN5MC
CN68(FM4)
CN62
CN57
CN10
CN3(PS17)
CN2(SL1)
CN2HV
CN1HV
HV
CN67
(CL5)
CN4
CN1
(CL4)
2
PRCB
CN40MC
CN38MC
CN53
CN148
CN56
(M6)
CN47
(Fusing Unit)

Key	Part No.	Description		Destinations	Class	QTY	Standard parts
1	A02E N100 00	Main body Relay harness	本体中継束線		D	1	
2	A02E N115 01	Fixing Relay harness /P	定着中継束線／ P		D	1	

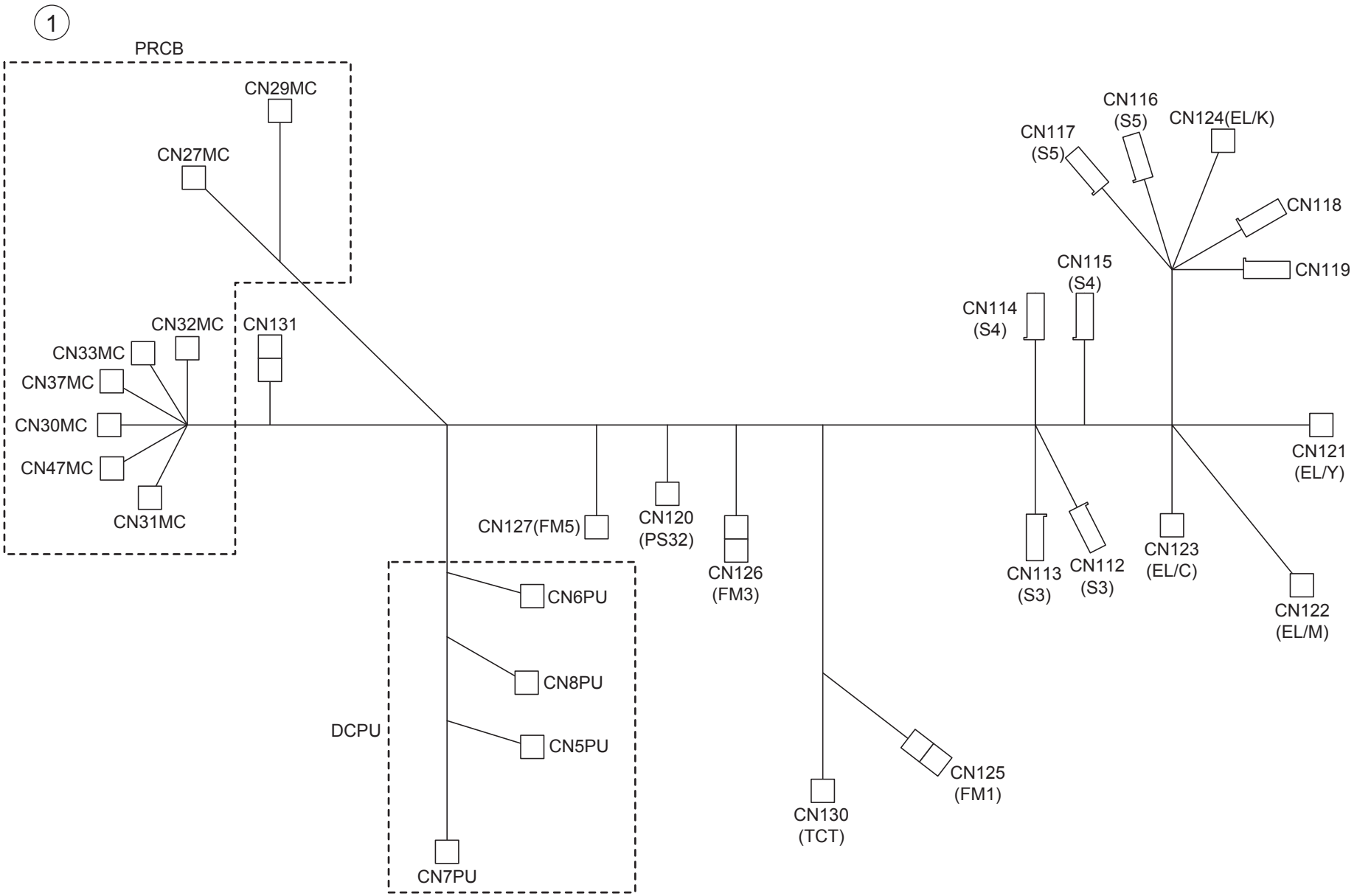
1
PRCB
CN29MC
CN27MC
CN32MC
CN131
CN33MC
CN37MC
CN30MC
CN47MC
CN31MC
CN116
(S5)
CN124(EL/K)
CN117
(S5)
CN118
CN119
CN115
(S4)
CN114
(S4)
CN121
(EL/Y)
CN127(FM5)
CN120
(PS32)
CN126
(FM3)
CN113
(S3)
CN112
(S3)
CN123
(EL/C)
CN122
(EL/M)
CN6PU
CN8PU
DCPU
CN5PU
CN7PU
CN130
(TCT)
CN125
(FM1)

Key	Part No.	Description		Destinations	Class	QTY	Standard parts
1	A02E N112 00	DC Power source harness /P	D C 電源束線／ P		D	1	

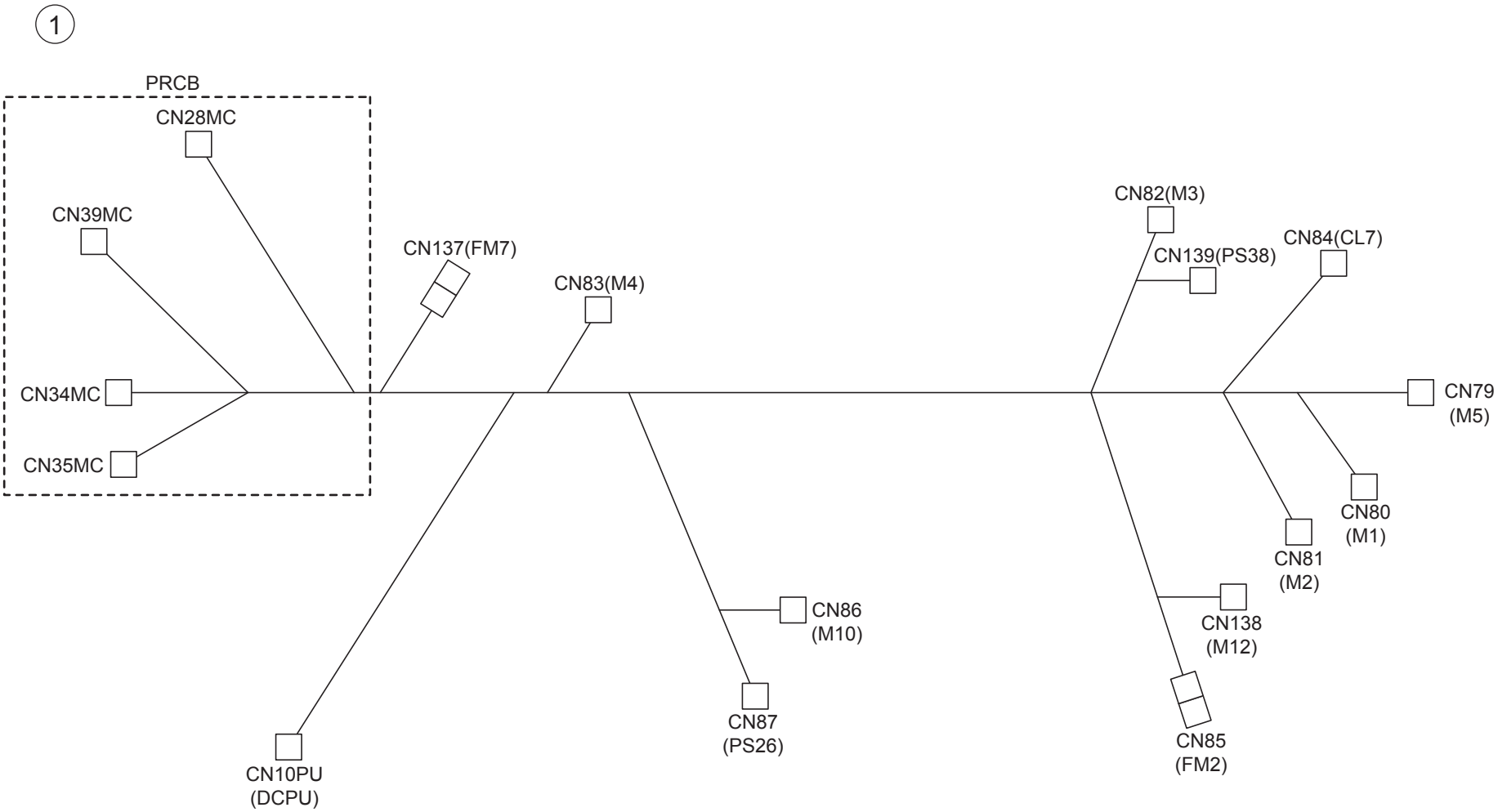
1
PRCB
CN28MC
CN39MC
CN137(FM7)
CN83(M4)
CN82(M3)
CN139(PS38)
CN84(CL7)
CN34MC
CN35MC
CN79
(M5)
CN80
(M1)
CN81
(M2)
CN86
(M10)
CN138
(M12)
CN87
(PS26)
CN85
(FM2)
CN10PU
(DCPU)

Key	Part No.	Description		Destinations	Class	QTY	Standard parts
1	A02E N11A 00	Drive Wiring /4	駆動束線／4		D	1	

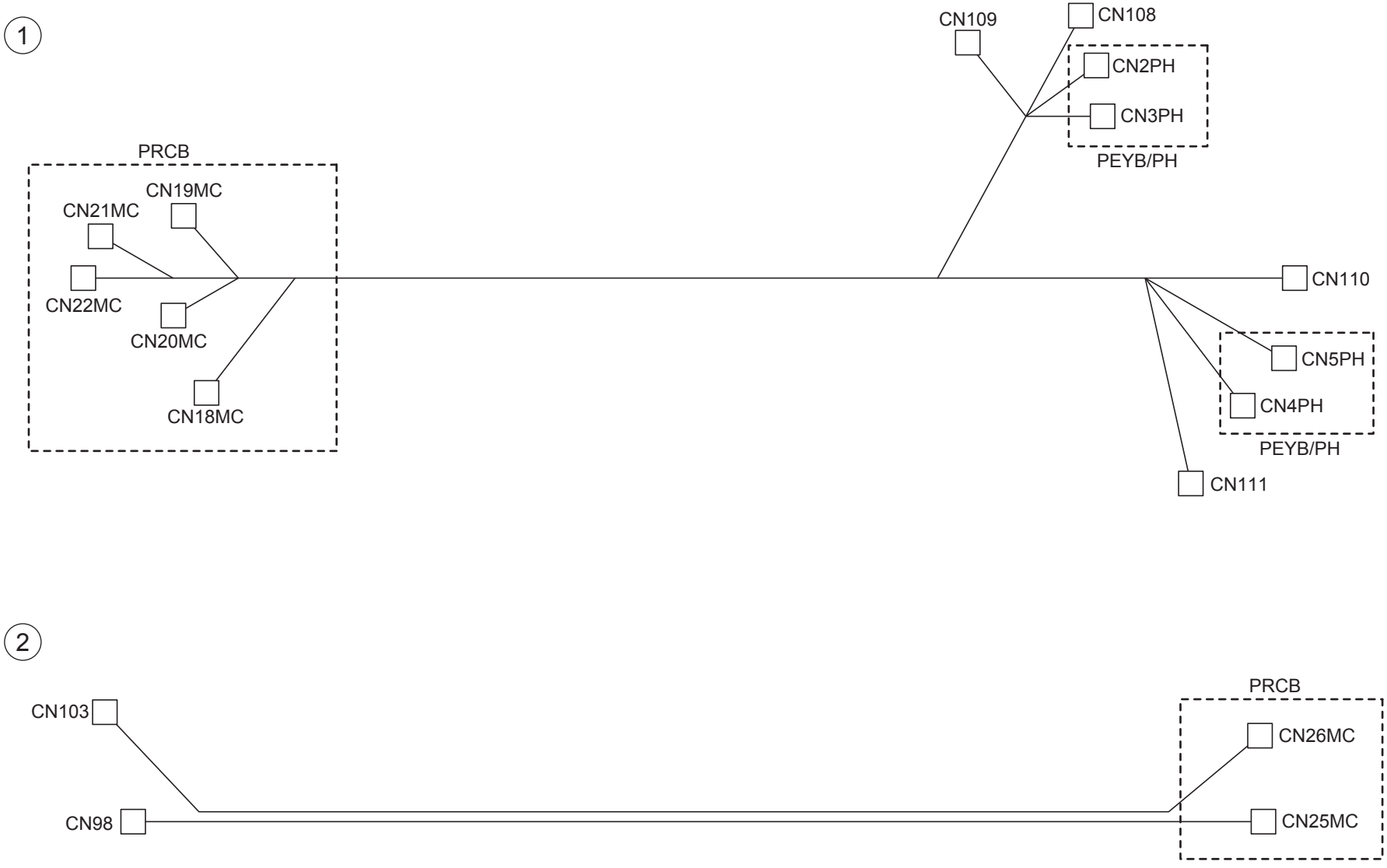
1
CN109
CN108
CN2PH
CN3PH
PEYB/PH
PRCB
CN19MC
CN21MC
CN22MC
CN20MC
CN18MC
CN110
CN5PH
CN4PH
PEYB/PH
CN111
2
CN103
CN98
PRCB
CN26MC
CN25MC

Key	Part No.	Description		Destinations	Class	QTY	Standard parts
1	A02E N10P 03	LD Relay harness	半導体レーザ中継束線		D	1	
2	A02E N10M 01	Photoconductor Relay harness	感光体中継束線		D	1	

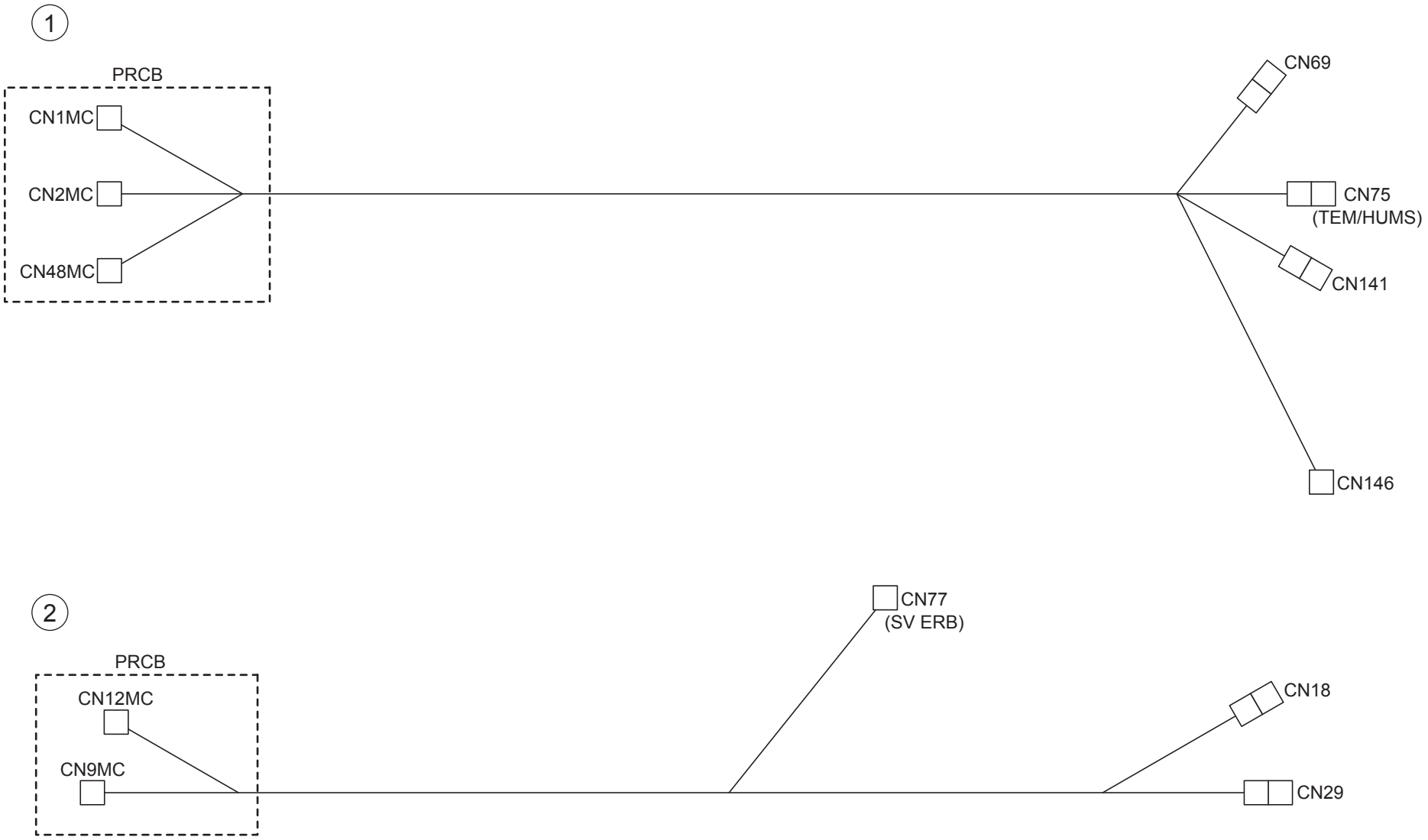
1
PRCB
CN1MC
CN2MC
CN48MC
CN69
CN75
(TEM/HUMS)
CN141
CN146
2
PRCB
CN12MC
CN9MC
CN77
(SV ERB)
CN18
CN29

Key	Part No.	Description		Destinations	Class	QTY	Standard parts
1	A02E N10A 01	Toner Relay harness	トナー中継束線		D	1	
2	A02E N102 00	Paperfeed Relay harness	給紙中継束線		D	1	

1 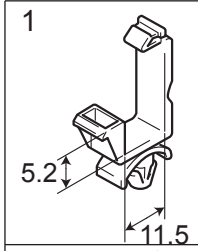	6 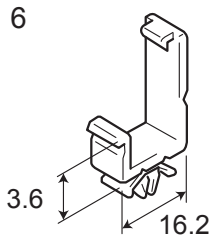	11 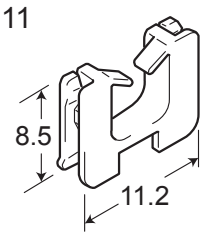	16 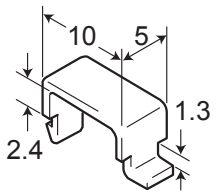	21 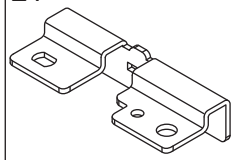 (DK-504)	26	31	36
2 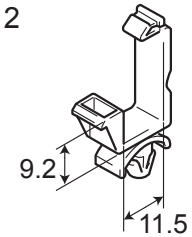	7 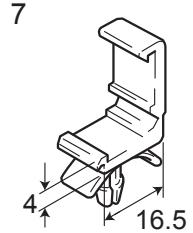	12 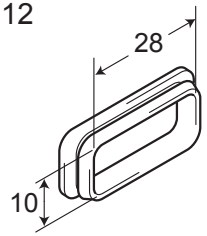	17 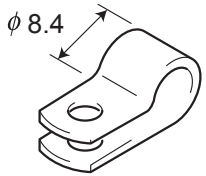	22	27	32	37
3 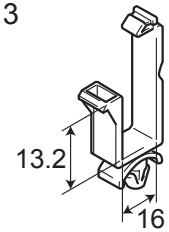	8 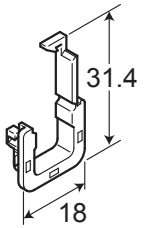	13 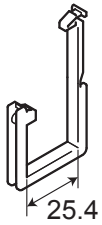	18 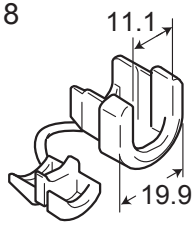	23	28	33	38
4 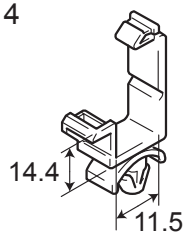	9 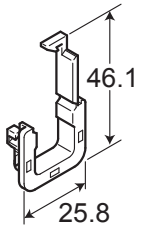	14 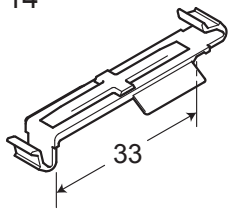	19 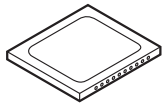	24	29	34	39
5 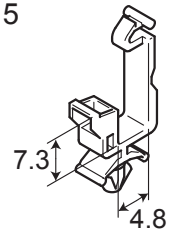	10 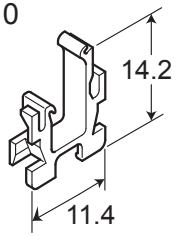	15 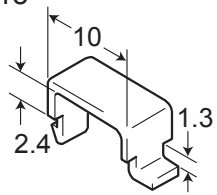	20 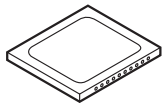	25	30	35	40

Key	Part No.	Description		Destinations	Class	QTY	Standard parts
1	V500 0100 03	Saddle	ロッキングワイヤーサドル		D		
2	V500 0100 05	saddle	ロッキングワイヤーサドル		D		
3	V500 0100 08	saddle	ロッキングワイヤーサドル		D		
4	V500 0100 07	saddle	ロッキングワイヤーサドル		D		
5	V500 0100 20	Saddle	ミニロッキングワイヤーサドル		D		
6	V500 0200 10	clip	コードクリップ（M）		D		
7	V500 0200 16	clipper	クリッパー		D		
8	V570 0100 31	holder	エッジホルダー		D		
9	V570 0100 32	holder	エッジホルダー		D		
10	V570 0100 25	saddle	ロッキングエッジサドル		D		
11	V570 0100 21	Saddle	エッジサドル		D		
12	1050 4805 01	INSULATING MEMBER	絶縁材		D		
13	V570 0100 48	SADDLE	エッジカバー		D		
14	V500 0200 66	CLAMP	フラットクランプ		D		
15	0990 5596 01	CORD CLAMP	コート゛オサエ		D		
16	1065 5872 02	CORD CLAMP	ＣＯＲＤ　ＰＵＳＨ		D		
17	V500 0200 39	clamp	ナイロンクランプ		D		
18	9384 1521 51	CORD BUSHING	コート゛フ゛ッシンク゛	A,A1	D		
19	A02E R912 00	Jig Memory Card	治具メモリーカード		S	1	
20	A02E R937 00	Jig Memory Card	治具メモリーカード	(Function Enhancing I)	S	1	
21	A093 6516 00	Reinforce Plate	補強板	(For DK-504)	D	1	

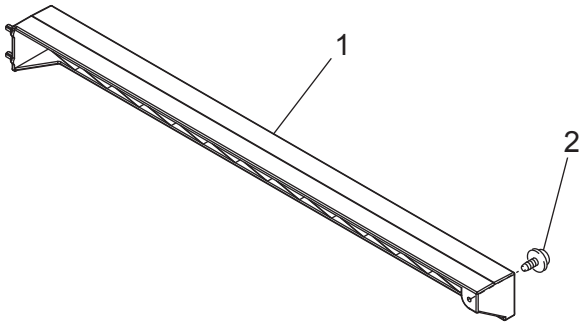
1
2

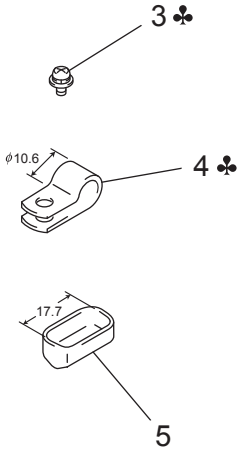
3 ♣
ϕ10.6
4 ♣
17.7
5

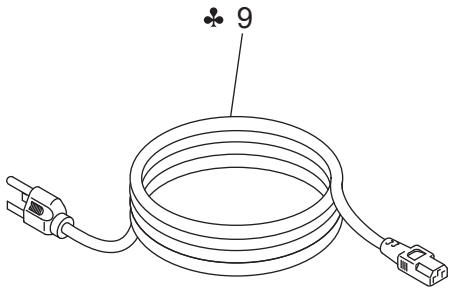
♣ 9

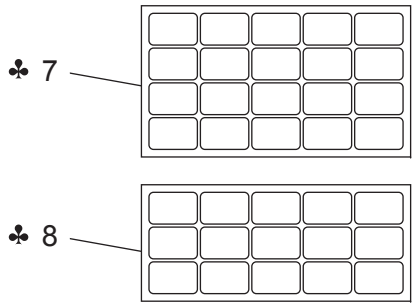
♣ 7
♣ 8

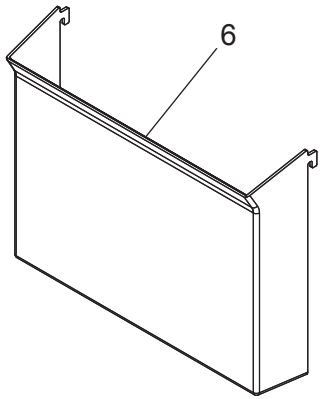
6

Key	Part No.	Description		Destinations	Class	QTY	Standard parts
1	A02E 1639 00	Cover	カバー（右下・目隠し）		C	1	
2	V137 0308 04	screw	カップ頭タッピングねじ ＳＣ タイト		D	1	
3	V116 0308 03	Screw	なべ小ねじ・セムス２	B,G2	D	1	
4	V500 0200 40	clamp	ナイロンクランプ	B,G2	D	1	
5	9384 2200 31	CN COVER	コネクタカバー		D	1	
6	A00J 1699 01	Holder	ホルダ		C	1	
7	A02E 9420 00	Label Metric	ラベル　メトリック	A,A1,C	C	1	
8	A02E 9421 00	Label Inch	ラベル　インチ	B,G2	C	1	
9	9381 4101 31	POWER CORD	プラグ付電源コード	B,G2	C	1	

● The items with no Page/Key numbers are not handled as spare parts.

No.	Section	PM Parts Description	Maintenance Cycle (K=1,000)		Parts No.	Destinations	Page/Key	Note
			QTY	Replace				
1	Tray 1	Feed roller	1	300K	A00J563600		P12-10	*2
2		Separation roller assy	1	300K	A02EF56600		P13-10	*2
3		Pick-up roller	1	300K	A00J563600		P12-10	*2
4	Tray 2	Feed roller	1	300K	A00J563600		P14-11	*2
5		Separation roller assy	1	300K	A02EF56600		P15-3	*2
6		Pick-up roller	1	300K	A00J563600		P14-11	*2
7	Manual bypass tray	Feed roller	1	200K	A02E594700		P24-14	*2
8		Separation roller assy	1	200K	4034015101		P23-8	*2
9	Processing section	Imaging unit Y,M,C	1	90K	-		-	
10		Imaging unit K	1	120K	-		-	
11		Ozone filter	1	150K	A02ER73011		P6-33	*3
12		Toner cartridge Y,M,C	1	20K	-		-	
13		Toner cartridge K	1	26K	-		-	
14	Image transfer section	Transfer roller unit	1	150K *5	A02ER71300		P27-17	
15		Transfer belt unit	1	150K	A02ER73011		P6-33	
16		Waste toner box	1	(50K)	A0DTWY0		P11-1	*4
17	Fusing section	Fusing unit	1	400K	A02ER71811	100V	P30-1	
18		Fusing unit	1	400K	A02ER72011	120V	P30-1	*6
19		Fusing unit	1	400K	A02ER72111	230V	P30-1	*7

*1: Actual durable cycle is the life counter value.

*2: Replace those parts at the same time.

*3: The ozone filter is furnished with the transfer belt unit so that all of them are replaced at one time.

*4: A waste toner full condition is detected with detecting the actual waste toner emissions.

*5: Because there is no life-counter for the transfer roller unit, substitute it by the life-counter of the transfer belt unit.

*6: 120 V areas only.

*7: 220-240 V areas only.

メンテナンスリスト

●ページ / キーナンバーのないものは､アフターサービス部品ではありません。

No.	区分	ＰＭ 部品名称	サイクル (K=1,000)		部品番号	仕向地	頁 / キー	備考
			員数	交換				
1	トレイ 1	給紙ローラー	1	300K	A00J563600		P12-10	*2
2		分離ローラー Assy	1	300K	A02EF56600		P13-10	*2
3		ピックアップローラー	1	300K	A00J563600		P12-10	*2
4	トレイ 2	給紙ローラー	1	300K	A00J563600		P14-11	*2
5		分離ローラー Assy	1	300K	A02EF56600		P15-3	*2
6		ピックアップローラー	1	300K	A00J563600		P14-11	*2
7	手差し	給紙ローラー	1	200K	A02E594700		P24-14	*2
8		分離ローラー Assy	1	200K	4034015101		P23-8	*2
9	プロセス部	イメージングユニット Y,M,C	1	90K	-		-	
10		イメージングユニット K	1	120K	-		-	
11		オゾンフィルター	1	150K	A02ER73011		P6-33	*4
12		トナーカートリッジ Y,M,C	1	20K	-		-	
13		トナーカートリッジ K	1	26K	-		-	
14	転写部	転写ローラーユニット	1	150K *5	A02ER71300		P27-17	
15		転写ベルトユニット	1	150K	A02ER73011		P6-33	
16		廃棄トナーボックス	1	(50K)	A0DTWY0		P11-1	*3
17	定着部	定着ユニット	1	400K	A02ER71811	100V	P30-1	
18		定着ユニット	1	400K	A02ER72011	120V	P30-1	
19		定着ユニット	1	400K	A02ER72111	230V	P30-1	

*1: 実質交換サイクルの数値は、ライフカウンターの値である。

*2: 同時交換のこと。

*3: 廃棄トナーフル検知は、実際の廃棄トナー充填量を検知して行う。

*4: オゾンフィルターは転写ベルトユニットに同梱されているため同時交換となる。

*5: 転写ローラーユニットにはライフカウンターが設けられていないため、転写ベルトユニットのライフカウンターにて代用する。

DESTINATION

Destination No.		Destinations		V	Hz	Model No.
A	A1	JAPAN		100	50/60	A02E-004
	A2	JAPAN				
B		USA, CANADA		120	60	A02E-013
C		EUROPEAN TYPE		220-240	50/60	A02E-023
D	D1	S.E ASIA TYPE	THAILAND, SRI LANKA, SINGAPORE, MALAYSIA, HONG KONG, PAKISTAN, INDIA, BANGLADESH, INDONESIA			
	D3	OCEANIA TYPE	AUSTRALIA, NEW ZEALAND			
E		PHILIPPINES				
F	F1	SAUDI ARABIA				
	F2	SAUDI ARABIA				
G	G1	C.S AMERICA				
	G2	C.S AMERICA		120	60	A02E-013
H		TAIWAN				
I		JORDAN, LEBANON, SYRIA, SOUTH AFRICA, IRAQ, IRAN, N.YEMEN, CAMEROON, UAE, BAHRAIN, OMAN, QATAR, KUWAIT, KENYA, TUNISIA, IVORY COAST, MOROCCO				
J		CHINA				
K		KOREA				