KONICA MINOLTA

SERVICE MANUAL

FIELD SERVICE

bizhub C300/C352

This Service Manual is designed for machine with Firmware Card Ver. G4 and onward.

2006.08
KONICA MINOLTA BUSINESS TECHNOLOGIES, INC. Ver. 2.0

FIELD SERVICE TOTAL CONTENTS

SAFETY AND IMPORTANT WARNING ITEMS S-1
IMPORTANT NOTICE S-1
DESCRIPTION ITEMS FOR DANGER, WARNING AND CAUTION S-1
SAFETY WARNINGS S-2
WARNING INDICATIONS ON THE MACHINE S-18
MEASURES TO TAKE IN CASE OF AN ACCIDENT S-20
Composition of the service manual C-1
Notation of the service manual C-2

bizhub C300/C352 Main unit

General 1
Maintenance 9
Adjustment/Setting 181
Troubleshooting 411
Appendix 535

Standard Controller

General 1
Maintenance 3
Adjustment/Setting 37
Troubleshooting 39

Duplex Unit (AD-503)

General 1
Maintenance 3
Adjustment/Setting 7
Troubleshooting 11

DF-608

General 1
Maintenance 5
Adjustment/Setting 25
Troubleshooting 49

PC-103/PC-203

General 1
Maintenance 3
Adjustment/Setting 13
Troubleshooting 19

PC-403

General 1
Maintenance 3
Adjustment/Setting 17
Troubleshooting 25

FS-514/PK-510/OT-601

General 1
Maintenance 7
Adjustment/Setting 45
Troubleshooting 59

MT-501

General 1
Maintenance 3
Adjustment/Setting 7
Troubleshooting 13

SD-503

General 1
Maintenance 3
Adjustment/Setting 25
Troubleshooting 37

SAFETY AND IMPORTANT WARNING ITEMS

Read carefully the Safety and Important Warning Items described below to understand them before doing service work.

IMPORTANT NOTICE

Because of possible hazards to an inexperienced person servicing this product as well as the risk of damage to the product, KONICA MINOLTA BUSINESS TECHNOLOGIES, INC. (hereafter called the KMBT) strongly recommends that all servicing be performed only by KMBT-trained service technicians.
Changes may have been made to this product to improve its performance after this Service Manual was printed. Accordingly, KMBT does not warrant, either explicitly or implicitly, that the information contained in this Service Manual is complete and accurate.
The user of this Service Manual must assume all risks of personal injury and/or damage to the product while servicing the product for which this Service Manual is intended.
Therefore, this Service Manual must be carefully read before doing service work both in the course of technical training and even after that, for performing maintenance and control of the product properly.
Keep this Service Manual also for future service.

DESCRIPTION ITEMS FOR DANGER, WARNING AND CAUTION

In this Service Manual, each of three expressions "⚠ DANGER", "⚠ WARNING", and "⚠ CAUTION" is defined as follows together with a symbol mark to be used in a limited meaning.
When servicing the product, the relevant works (disassembling, reassembling, adjustment, repair, maintenance, etc.) need to be conducted with utmost care.

⚠ **DANGER: Action having a high possibility of suffering death or serious injury**

⚠ **WARNING: Action having a possibility of suffering death or serious injury**

⚠ **CAUTION: Action having a possibility of suffering a slight wound, medium trouble, and property damage**

Symbols used for safety and important warning items are defined as follows:

△ :Precaution when servicing the product.

⃠ :Prohibition when servicing the product.

● :Direction when servicing the product.

SAFETY WARNINGS

[1] MODIFICATIONS NOT AUTHORIZED BY KONICA MINOLTA BUSINESS TECHNOLOGIES, INC.

KONICA MINOLTA brand products are renowned for their high reliability. This reliability is achieved through high-quality design and a solid service network.
Product design is a highly complicated and delicate process where numerous mechanical, physical, and electrical aspects have to be taken into consideration, with the aim of arriving at proper tolerances and safety factors. For this reason, unauthorized modifications involve a high risk of degradation in performance and safety. Such modifications are therefore strictly prohibited. the points listed below are not exhaustive, but they illustrate the reasoning behind this policy.

Prohibited Actions

⚠ DANGER

- Using any cables or power cord not specified by KMBT.

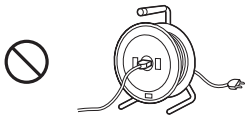

- Using any fuse or thermostat not specified by KMBT. Safety will not be assured, leading to a risk of fire and injury.

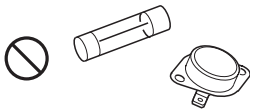

- Disabling fuse functions or bridging fuse terminals with wire, metal clips, solder or similar object.

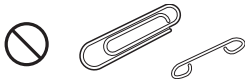

- Disabling relay functions (such as wedging paper between relay contacts)

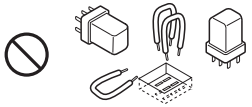

- Disabling safety functions (interlocks, safety circuits, etc.) Safety will not be assured, leading to a risk of fire and injury.

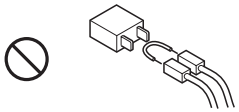

- Making any modification to the product unless instructed by KMBT

- Using parts not specified by KMBT

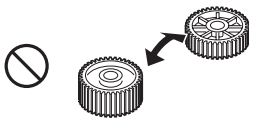

[2] POWER PLUG SELECTION

In some countries or areas, the power plug provided with the product may not fit wall outlet used in the area. In that case, it is obligation of customer engineer (hereafter called the CE) to attach appropriate power plug or power cord set in order to connect the product to the supply.

Power Cord Set or Power Plug

⚠ WARNING

- Use power supply cord set which meets the following criteria:
  - provided with a plug having configuration intended for the connection to wall outlet appropriate for the product's rated voltage and current, and
  - the plug has pin/terminal(s) for grounding, and
  - provided with three-conductor cable having enough current capacity, and
  - the cord set meets regulatory requirements for the area.

  Use of inadequate cord set leads to fire or electric shock.

- Attach power plug which meets the following criteria:
  - having configuration intended for the connection to wall outlet appropriate for the product's rated voltage and current, and
  - the plug has pin/terminal(s) for grounding, and
  - meets regulatory requirements for the area.

  Use of inadequate cord set leads to the product connecting to inadequate power supply (voltage, current capacity, grounding), and may result in fire or electric shock.

- Conductors in the power cable must be connected to terminals of the plug according to the following order:
  - Black or Brown: L (line)
  - White or Light Blue: N (neutral)
  - Green/Yellow: PE (earth)

  Wrong connection may cancel safeguards within the product, and results in fire or electric shock.

[3] CHECKPOINTS WHEN PERFORMING ON-SITE SERVICE

KONICA MINOLTA brand products are extensively tested before shipping, to ensure that all applicable safety standards are met, in order to protect the customer and customer engineer (hereafter called the CE) from the risk of injury. However, in daily use, any electrical equipment may be subject to parts wear and eventual failure. In order to maintain safety and reliability, the CE must perform regular safety checks.

1. Power Supply

Connection to Power Supply

⚠ WARNING

- Check that mains voltage is as specified.

  Connection to wrong voltage supply may result in fire or electric shock.

- Connect power plug directly into wall outlet having same configuration as the plug.

  Use of an adapter leads to the product connecting to inadequate power supply (voltage, current capacity, grounding), and may result in fire or electric shock.

  If proper wall outlet is not available, advice the customer to contact qualified electrician for the installation.

- Plug the power cord into the dedicated wall outlet with a capacity greater than the maximum power consumption.

  If excessive current flows in the wall outlet, fire may result.

- If two or more power cords can be plugged into the wall outlet, the total load must not exceed the rating of the wall outlet.

  If excessive current flows in the wall outlet, fire may result.

- Make sure the power cord is plugged in the wall outlet securely.

  Contact problems may lead to increased resistance, overheating, and the risk of fire.

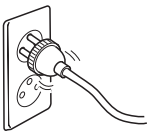

- Check whether the product is grounded properly.

  If current leakage occurs in an ungrounded product, you may suffer electric shock while operating the product.

  Connect power plug to grounded wall outlet.

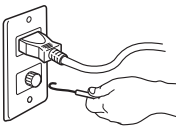

Power Plug and Cord

⚠ WARNING

- When using the power cord set (inlet type) that came with this product, make sure the connector is securely inserted in the inlet of the product.
  When securing measure is provided, secure the cord with the fixture properly.
  If the power cord (inlet type) is not connected to the product securely, a contact problem may lead to increased resistance, overheating, and risk of fire.

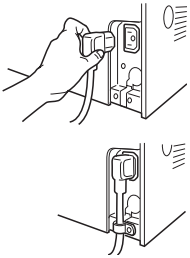

- Check whether the power cord is not stepped on or pinched by a table and so on.
  Overheating may occur there, leading to a risk of fire.

- Check whether the power cord is damaged. Check whether the sheath is damaged.
  If the power plug, cord, or sheath is damaged, replace with a new power cord (with plug and connector on each end) specified by KMBT. Using the damaged power cord may result in fire or electric shock.

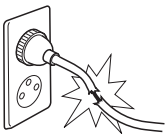

- Do not bundle or tie the power cord.
  Overheating may occur there, leading to a risk of fire.

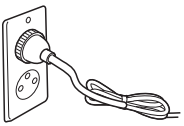

- Check whether dust is collected around the power plug and wall outlet.
  Using the power plug and wall outlet without removing dust may result in fire.

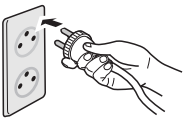

- Do not insert the power plug into the wall outlet with a wet hand.
  The risk of electric shock exists.

- When unplugging the power cord, grasp the plug, not the cable.
  The cable may be broken, leading to a risk of fire and electric shock.

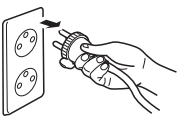

Wiring

⚠ WARNING

- Never use multi-plug adapters to plug multiple power cords in the same outlet.

  If used, the risk of fire exists.

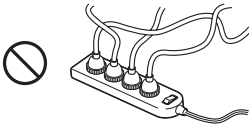

- When an extension cord is required, use a specified one. Current that can flow in the extension cord is limited, so using a too long extension cord may result in fire.

  Do not use an extension cable reel with the cable taken up. Fire may result.

2. Installation Requirements

Prohibited Installation Places

⚠ WARNING

- Do not place the product near flammable materials or volatile materials that may catch fire.

  A risk of fire exists.

- Do not place the product in a place exposed to water such as rain.

  A risk of fire and electric shock exists.

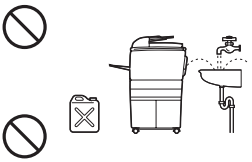

When not Using the Product for a long time

⚠ WARNING

- When the product is not used over an extended period of time (holidays, etc.), switch it off and unplug the power cord.

  Dust collected around the power plug and outlet may cause fire.

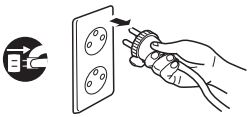

Ventilation

⚠ CAUTION

- The product generates ozone gas during operation, but it will not be harmful to the human body.

  If a bad smell of ozone is present in the following cases, ventilate the room.

  a. When the product is used in a poorly ventilated room
  b. When taking a lot of copies
  c. When using multiple products at the same time

Stability

⚠ CAUTION

- Be sure to lock the caster stoppers.

  In the case of an earthquake and so on, the product may slide, leading to a injury.

Inspection before Servicing

⚠ CAUTION

- Before conducting an inspection, read all relevant documentation (service manual, technical notices, etc.) and proceed with the inspection following the prescribed procedure, using only the prescribed tools. Do not make any adjustment not described in the documentation.

  If the prescribed procedure or tool is not used, the product may break and a risk of injury or fire exists.

- Before conducting an inspection, be sure to disconnect the power plugs from the product and options.

  When the power plug is inserted in the wall outlet, some units are still powered even if the POWER switch is turned OFF. A risk of electric shock exists.

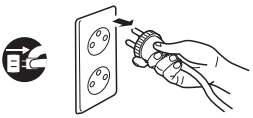

- The area around the fixing unit is hot.

  You may get burnt.

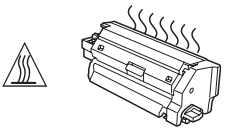

Work Performed with the Product Powered On

⚠ WARNING

- Take every care when making adjustments or performing an operation check with the product powered.

  If you make adjustments or perform an operation check with the external cover detached, you may touch live or high-voltage parts or you may be caught in moving gears or the timing belt, leading to a risk of injury.

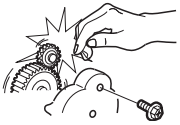

- Take every care when servicing with the external cover detached.

  High-voltage exists around the drum unit. A risk of electric shock exists.

Safety Checkpoints

⚠ WARNING

- Check the exterior and frame for edges, burrs, and other damage.

  The user or CE may be injured.

- Do not allow any metal parts such as clips, staples, and screws to fall into the product.

  They can short internal circuits and cause electric shock or fire.

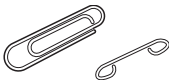

- Check wiring for squeezing and any other damage.

  Current can leak, leading to a risk of electric shock or fire.

- Carefully remove all toner remnants and dust from electrical parts and electrode units such as a charging corona unit.

  Current can leak, leading to a risk of product trouble or fire.

- Check high-voltage cables and sheaths for any damage.

  Current can leak, leading to a risk of electric shock or fire.

Safety Checkpoints

⚠ WARNING

- Check electrode units such as a charging corona unit for deterioration and sign of leakage.

  Current can leak, leading to a risk of trouble or fire.

- Before disassembling or adjusting the write unit (P/H unit) incorporating a laser, make sure that the power cord has been disconnected.

  The laser light can enter your eye, leading to a risk of loss of eyesight.

- Do not remove the cover of the write unit. Do not supply power with the write unit shifted from the specified mounting position.

  The laser light can enter your eye, leading to a risk of loss of eyesight.

- When replacing a lithium battery, replace it with a new lithium battery specified in the Parts Guide Manual. Dispose of the used lithium battery using the method specified by local authority.

  Improper replacement can cause explosion.

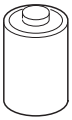

- After replacing a part to which AC voltage is applied (e.g., optical lamp and fixing lamp), be sure to check the installation state.

  A risk of fire exists.

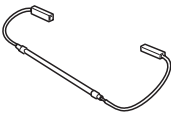

- Check the interlock switch and actuator for loosening and check whether the interlock functions properly.

  If the interlock does not function, you may receive an electric shock or be injured when you insert your hand in the product (e.g., for clearing paper jam).

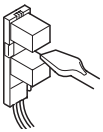

- Make sure the wiring cannot come into contact with sharp edges, burrs, or other pointed parts.

  Current can leak, leading to a risk of electric shock or fire.

Safety Checkpoints

⚠ WARNING

- Make sure that all screws, components, wiring, connectors, etc. that were removed for safety check and maintenance have been reinstalled in the original location. (Pay special attention to forgotten connectors, pinched cables, forgotten screws, etc.)

  A risk of product trouble, electric shock, and fire exists.

Handling of Consumables

⚠ WARNING

- Toner and developer are not harmful substances, but care must be taken not to breathe excessive amounts or let the substances come into contact with eyes, etc. It may be stimulative.

  If the substances get in the eye, rinse with plenty of water immediately. When symptoms are noticeable, consult a physician.

- Never throw the used cartridge and toner into fire.

  You may be burned due to dust explosion.

Handling of Service Materials

⚠ CAUTION

- Unplug the power cord from the wall outlet.

  Drum cleaner (isopropyl alcohol) and roller cleaner (acetone-based) are highly flammable and must be handled with care. A risk of fire exists.

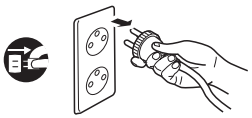

- Do not replace the cover or turn the product ON before any solvent remnants on the cleaned parts have fully evaporated.

  A risk of fire exists.

Handling of Service Materials

⚠ CAUTION

- Use only a small amount of cleaner at a time and take care not to spill any liquid. If this happens, immediately wipe it off.
  A risk of fire exists.

- When using any solvent, ventilate the room well.
  Breathing large quantities of organic solvents can lead to discomfort.

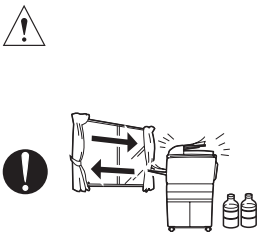

[4] Used Batteries Precautions

ALL Areas

CAUTION

Danger of explosion if battery is incorrectly replaced.
Replace only with the same or equivalent type recommended by the manufacturer.
Dispose of used batteries according to the manufacturer's instructions.

Germany

VORSICHT!

Explosionsgefahr bei unsachgemäßem Austausch der Batterie.
Ersatz nur durch denselben oder einen vom Hersteller empfohlenen gleichwertigen Typ.
Entsorgung gebrauchter Batterien nach Angaben des Herstellers.

France

ATTENTION

Il y a danger d'explosion s'il y a remplacement incorrect de la batterie.
Remplacer uniquement avec une batterie du même type ou d'un type équivalent recommandé par le constructeur.
Mettre au rebut les batteries usagées conformément aux instructions du fabricant.

Denmark

ADVARSEL!

Lithiumbatteri - Eksplosionsfare ved fejlagtig håndtering.
Udskiftning må kun ske med batteri af samme fabrikat og type.
Levér det brugte batteri tilbage til leverandøren.

Finland, Sweden

VAROITUS

Paristo voi räjähtää, jos se on virheellisesti asennettu.
Vaihda paristo ainoastaan laitevalmistajan suosittelemaan tyyppiin.
Hävitä käytetty paristo valmistajan ohjeiden mukaisesti.

VARNING

Explosionsfara vid felaktigt batteribyte.
Använd samma batterityp eller en ekvivalent typ som rekommenderas av apparattillverkaren.
Kassera använt batteri enligt fabrikantens instruktion.

Norway

ADVARSEL

Eksplosjonsfare ved feilaktig skifte av batteri.
Benytt samme batteritype eller en tilsvarende type anbefalt av apparatfabrikanten.
Brukte batterier kasseres i henhold til fabrikantens instruksjoner.

[5] FUSE

CAUTION
Double pole / neutral fusing

ATTENTION
Double pôle / fusible sur le neutre.

[6] Laser Safety

- This is a digital machine certified as a Class 1 laser product. There is no possibility of danger from a laser, provided the machine is serviced according to the instruction in this manual.

6.1 Internal Laser Radiation

semiconductor laser	
Maximum power of the laser diode	10 mW
Maximum average radiation power (*)	11.6 µW
Wavelength	775-800 nm

*at laser aperture of the Print Head Unit

- This product employs a Class 3B laser diode that emits an invisible laser beam. The laser diode and the scanning polygon mirror are incorporated in the print head unit.
- The print head unit is NOT A FIELD SERVICEABLE ITEM. Therefore, the print head unit should not be opened under any circumstances.

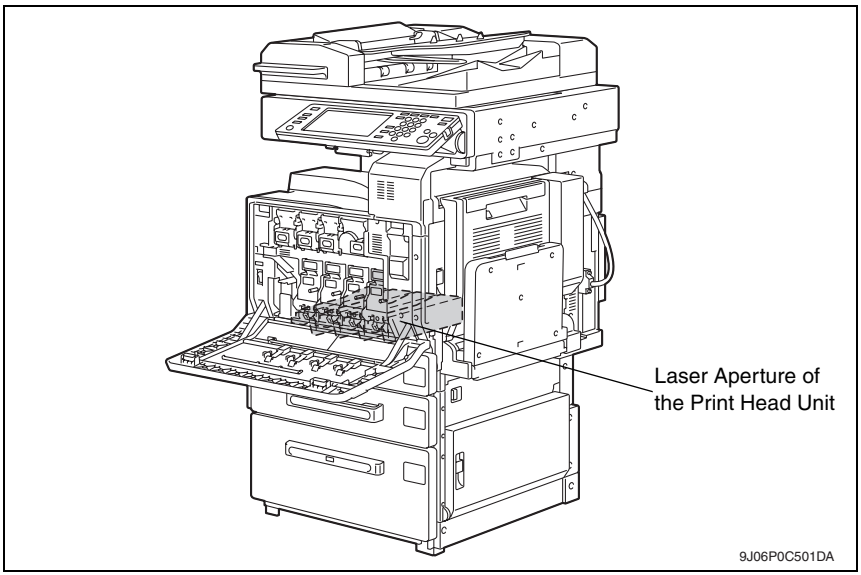

U.S.A., Canada
(CDRH Regulation)

- This machine is certified as a Class 1 Laser product under Radiation Performance Standard according to the Food, Drug and Cosmetic Act of 1990. Compliance is mandatory for Laser products marketed in the United States and is reported to the Center for Devices and Radiological Health (CDRH) of the U.S. Food and Drug Administration of the U.S. Department of Health and Human Services (DHHS). This means that the device does not produce hazardous laser radiation.

- The label shown on page S-16 indicates compliance with the CDRH regulations and must be attached to laser products marketed in the United States.

CAUTION
- **Use of controls, adjustments or performance of procedures other than those specified in this manual may result in hazardous radiation exposure.**

semiconductor laser	
Maximum power of the laser diode	10 mW
Wavelength	775-800 nm

All Areas

CAUTION
- **Use of controls, adjustments or performance of procedures other than those specified in this manual may result in hazardous radiation exposure.**

semiconductor laser	
Maximum power of the laser diode	10 mW
Wavelength	775-800 nm

Denmark

ADVARSEL
- **Usynlig laserstråling ved åbning, når sikkerhedsafbrydere er ude af funktion. Undgå udsættelse for stråling. Klasse 1 laser produkt der opfylder IEC60825-1 sikkerheds kravene.**

halvlederlaser	
Laserdiodens højeste styrke	10 mW
bølgelængden	775-800 nm

Finland, Sweden

LUOKAN 1 LASERLAITE
KLASS 1 LASER APPARAT

VAROITUS!
- **Laitteen käyttäminen muulla kuin tässä käyttöohjeessa mainitulla tavalla saattaa altistaa käyttäjän turvallisuusluokan 1 ylittävälle näkymättömälle laser-säteilylle.**

puolijohdelaser	
Laserdiodin suurin teho	10 mW
aallonpituus	775-800 nm

VARNING!
- **Om apparaten används på annat sätt än i denna bruksanvisning specificerats, kan användaren utsättas för osynlig laserstrålning, som överskrider gränsen för laserklass 1.**

halvledarlaser	
Den maximala effekten för laserdioden	10 mW
våglängden	775-800 nm

VARO!
- **Avattaessa ja suojalukitus ohitettaessa olet alttiina näkymättomälle laser-säteilylle. Älä katso säteeseen.**

VARNING!
- **Osynlig laserstråining när denna del är öppnad och spärren är urkopplad. Betrakta ej stråien.**

Norway

ADVERSEL
- **Dersom apparatet brukes på annen måte enn spesifisert i denne bruksanvisning, kan brukeren utsettes för unsynlig laserstrålning, som overskrider grensen for laser klass 1.**

halvleder laser	
Maksimal effekt till laserdiode	10 mW
bølgelengde	775-800 nm

6.2 Laser Safety Label

- A laser safety label is attached to the inside of the machine as shown below.

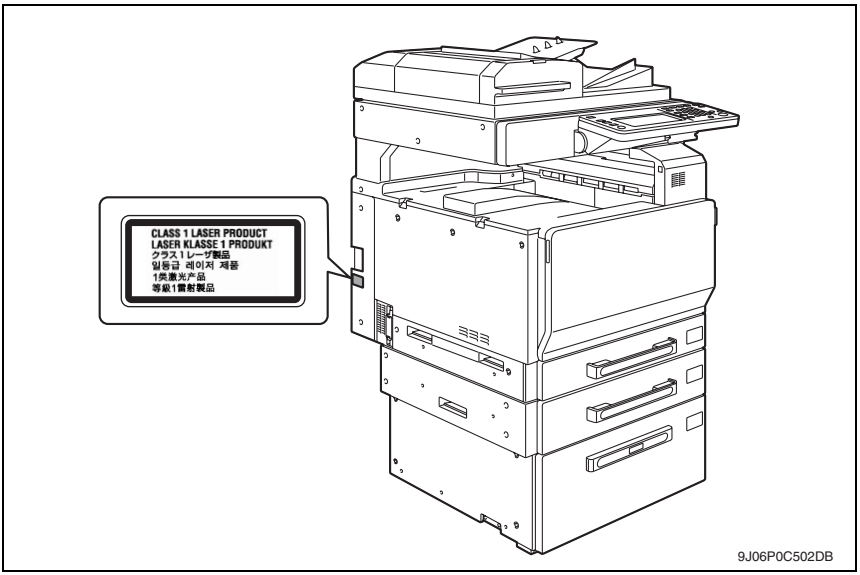

6.3 Laser Caution Label

- A laser caution label is attached to the outside of the machine as shown below.

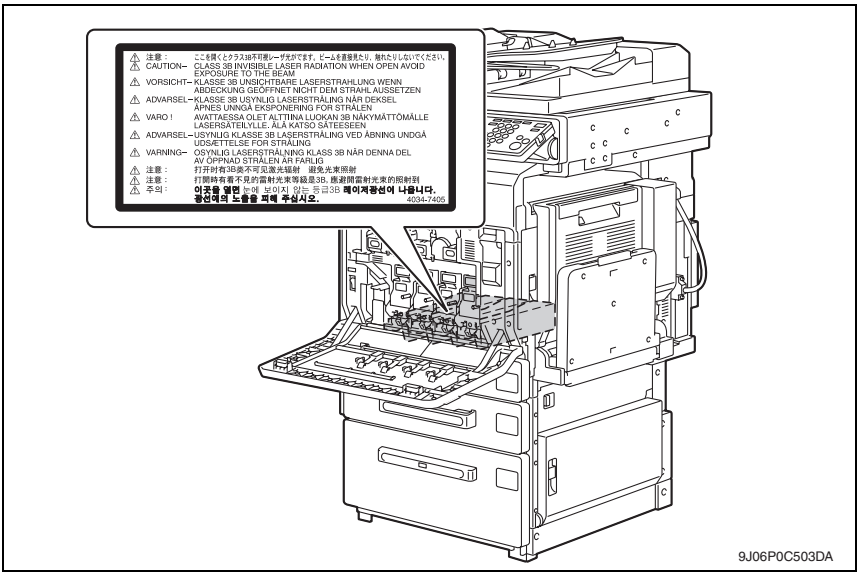

6.4 PRECAUTIONS FOR HANDLING THE LASER EQUIPMENT

- When laser protective goggles are to be used, select ones with a lens conforming to the above specifications.
- When a disassembly job needs to be performed in the laser beam path, such as when working around the printerhead and PC drum, be sure first to turn the printer OFF.
- If the job requires that the printer be left ON, take off your watch and ring and wear laser protective goggles.
- A highly reflective tool can be dangerous if it is brought into the laser beam path. Use utmost care when handling tools on the user's premises.
- The Print head is not to be disassembled or adjusted in the field. Replace the unit or Assembly including the control board. Therefore, remove the laser diode, and do not perform control board trimmer adjustment.

WARNING INDICATIONS ON THE MACHINE

Caution labels shown are attached in some areas on/in the machine.
When accessing these areas for maintenance, repair, or adjustment, special care should be taken to avoid burns and electric shock.

High voltage

- **This area generates high voltage. Be careful not to touch here when the power is turned ON to avoid getting an electric shock.**

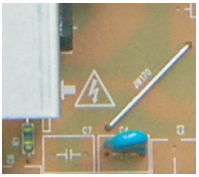

High voltage

- **This area generates high voltage. Be careful not to touch here when the power is turned ON to avoid getting an electric shock.**

9J06P0C504DA

WARNING

- **Do not position the used waste toner box so that it is standing on end or tilted, otherwise toner may spill.**

WARNING

- **Do not burn used toner cartridges. Toner expelled from the fire is dangerous.**

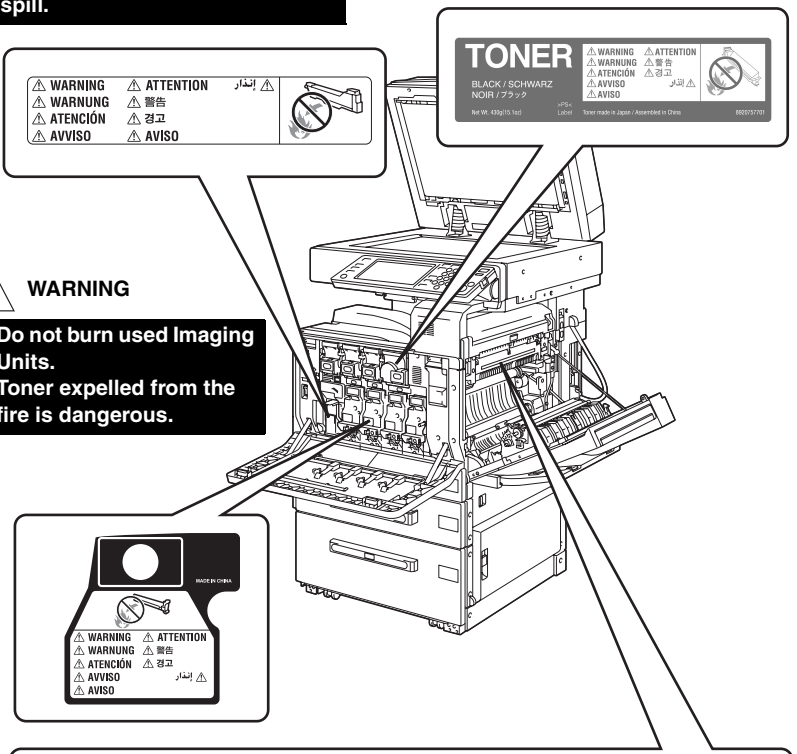

WARNING

- **Do not burn used Imaging Units. Toner expelled from the fire is dangerous.**

⚠ CAUTION High Temperature!	⚠ ATTENTION Température élevée!	⚠ CUIDADO Alta temperatura!	⚠ 注意 高温！	⚠ 注意 高溫！
⚠ VORSICHT Heiße Oberfläche!	⚠ PRECAUCIÓN ¡Temperatura alta!	⚠ ATTENZIONE Alta temperatura!	⚠ تحذير حرارة عالية!	⚠ 주의 고온！

CAUTION

- **The area around the fusing unit is extremely hot. Touching any part other than those indicated may result in burns.**

9J06P0C505DA

CAUTION:

- **You may be burned or injured if you touch any area that you are advised not to touch by any caution label. Do not remove caution labels. If any caution label has come off or soiled and therefore the caution cannot be read, contact our service office.**

MEASURES TO TAKE IN CASE OF AN ACCIDENT

1. If an accident has occurred, the distributor who has been notified first must immediately take emergency measures to provide relief to affected persons and to prevent further damage.
2. If a report of a serious accident has been received from a customer, an on-site evaluation must be carried out quickly and KMBT must be notified.
3. To determine the cause of the accident, conditions and materials must be recorded through direct on-site checks, in accordance with instructions issued by KMBT.
4. For reports and measures concerning serious accidents, follow the regulations specified by every distributor.

Composition of the service manual

This service manual consists of Theory of Operation section and Field Service section to explain the main machine and its corresponding options.

Theory of Operation section gives, as information for the CE to get a full understanding of the product, a rough outline of the object and role of each function, the relationship between the electrical system and the mechanical system, and the timing of operation of each part.

Field Service section gives, as information required by the CE at the site (or at the customer's premise), a rough outline of the service schedule and its details, maintenance steps, the object and role of each adjustment, error codes and supplementary information.

The basic configuration of each section is as follows. However some options may not be applied to the following configuration.

<Theory of Operation section>

OUTLINE:	Explanation of system configuration, product specifications, unit configuration, and paper path
COMPOSITION/OPERATION:	Explanation of configuration of each unit, operating system, and control system

<Field Service section>

GENERAL:	Explanation of system configuration, and product specifications
MAINTENANCE:	Explanation of service schedule, maintenance steps, service tools, removal/reinstallation methods of major parts, and firmware version up method etc.
ADJUSTMENT/SETTING:	Explanation of utility mode, service mode, and mechanical adjustment etc.
TROUBLESHOOTING:	Explanation of lists of jam codes and error codes, and their countermeasures etc.
APPENDIX:	Parts layout drawings, connector layout drawings, timing chart, overall layout drawing are attached.

Notation of the service manual

A. Product name

In this manual, each of the products is described as follows:

(1)	PRCB:	Printer control board
(2)	MFPB:	Mechanical Control Board
(3)	bizhub C300/C352:	Main unit
(4)	Microsoft Windows 98:	Windows 98
	Microsoft Windows Me:	Windows Me
	Microsoft Windows NT 4.0:	Windows NT 4.0 or Windows NT
	Microsoft Windows 2000:	Windows 2000
	Microsoft Windows XP:	Windows XP

When the description is made in combination of the OS's mentioned above:

Windows 98/Me

Windows NT 4.0/2000

Windows NT/2000/XP

Windows 98/Me/ NT/2000/XP

B. Brand name

The company names and product names mentioned in this manual are the brand name or the registered trademark of each company.

C. Feeding direction

- When the long side of the paper is parallel with the feeding direction, it is called short edge feeding. The feeding direction which is perpendicular to the short edge feeding is called the long edge feeding.
- Short edge feeding will be identified with [S (abbreviation for Short edge feeding)] on the paper size. No specific notation is added for the long edge feeding.
  When the size has only the short edge feeding with no long edge feeding, [S] will not be added to the paper size.

<Sample notation>

Paper size	Feeding direction	Notation
A4	Long edge feeding	A4
	Short edge feeding	A4S
A3	Short edge feeding	A3

KONICA MINOLTA

SERVICE MANUAL

FIELD SERVICE

bizhub

C300/C352 Main Unit

2006.08

KONICA MINOLTA BUSINESS TECHNOLOGIES, INC. Ver. 2.0

Revision history

After publication of this service manual, the parts and mechanism may be subject to change for improvement of their performance.
Therefore, the descriptions given in this service manual may not coincide with the actual machine.

When any change has been made to the descriptions in the service manual, a revised version will be issued with a revision mark added as required.

Revision mark:

- To indicate clearly a section revised, show △1 to the left of the revised section.
  A number within △1 represents the number of times the revision has been made.

- To indicate clearly a section revised, show ▲1 in the lower outside section of the corresponding page.
  A number within ▲1 represents the number of times the revision has been made.

NOTE

Revision marks shown in a page are restricted only to the latest ones with the old ones deleted.

- When a page revised in Ver. 2.0 has been changed in Ver. 3.0:
  The revision marks for Ver. 3.0 only are shown with those for Ver. 2.0 deleted.
- When a page revised in Ver. 2.0 has not been changed in Ver. 3.0:
  The revision marks for Ver. 2.0 are left as they are.

2006/08	2.0	△1	Error corrections / Corresponded to a Card Version G4
2006/03	1.0	—	Issue of the first edition
Date	Service manual Ver.	Revision mark	Descriptions of revision

CONTENTS

bizhub C300/C352 Main unit

General

1. System configuration 1
2. Product specifications 3

Maintenance

3. Periodical check 9
3.1 Service schedule 9
3.1.1 Main unit 9
3.1.2 Option 9
3.2 Maintenance items 10
3.2.1 Parts to be replaced by users (CRU) 10
3.2.2 Maintenance call (per 50,000/60,000-print) 10
3.2.3 Periodical parts replacement 1 (per 120,000-print) 11
3.2.4 Periodical parts replacement 2 (per 200,000-print) 11
3.2.5 Periodical parts replacement 3 (per 300,000-print) 12
3.3 Maintenance parts 13
3.3.1 Replacement parts 13
3.3.2 Cleaning parts 14
3.4 Concept of parts life 15
3.5 Maintenance procedure (periodical check parts) 17
3.5.1 Replacing the tray 1 feed roller 17
3.5.2 Replacing the tray 1 separation roller assy 17
3.5.3 Replacing the bypass tray feed roller 18
3.5.4 Replacing the bypass tray separation roller assy 20
3.5.5 Replacing the tray 2 separation roller 21
3.5.6 Replacing the tray 2 feed roller 22
3.5.7 Replacing the tray 2 pick-up roller 25
3.5.8 Cleaning of the registration roller 27
3.5.9 Replacing the waste toner bottle 28
3.5.10 Cleaning of the area around the waste toner collecting port 29
3.5.11 Replacing the ozone filter 29
3.5.12 Replacing the deodorant filter 29
3.5.13 Replacing the dust filter/vertical conveyance 30
3.5.14 Replacing the dust filter/cooling fan 30

3.6 Replacing the unit 31
3.6.1 Replacing the 2nd image transfer roller unit 31
3.6.2 Replacing the image transfer belt unit 32
3.6.3 Cleaning of the image transfer entrance guide 34
3.6.4 Cleaning of the IDC/registration sensor F, R 34
3.6.5 Replacing the toner cartridge (C, M, Y, K) 35
3.6.6 Cleaning of the comb electrode 36
3.6.7 Replacing the imaging unit (C, M, Y, K) 36
3.6.8 Replacing the fusing unit 39
4. Service tool 41
4.1 CE tool list 41
4.2 Copy materials 42
4.2.1 Imaging unit single parts (IU) 42
4.2.2 Toner cartridge single parts (T/C) 42
4.2.3 Waste toner bottle 42
4.2.4 Maintenance kit 42
5. Firmware upgrade 43
5.1 Outline 43
5.2 Preparations for firmware rewriting by Cygwin 43
5.2.1 Outline 43
5.2.2 Service environment 43
5.2.3 Installing the Cygwin 43
5.2.4 Settings of the Windows Environmental Variable 46
5.2.5 Writing into the compact flash 47
5.3 Preparations for firmware rewriting by Firmware Imaging Toolkit 2006 50
5.3.1 Correspond model 50
5.3.2 Function outline 50
5.3.3 System environment 50
5.3.4 Installation of software 51
5.3.5 Update of software 53
5.3.6 Screen 54
5.3.7 Details of each function 56
5.3.8 How to write firmware data 58
5.4 Firmware rewriting by compact flash 63
5.4.1 Updating method 63
5.4.2 Action when data transfer fails 66
5.5 Updating the firmware with the Internet ISW 67
5.5.1 Outline 67

5.5.2 Service environment 67
5.5.3 Preparations for firmware rewriting 67
5.5.4 Firmware rewriting 70
5.5.5 Error code list for the Internet ISW 73
6. Other 76
6.1 Disassembly/adjustment prohibited items 76
6.2 Disassembly/assembly/cleaning list (other parts) 77
6.2.1 Disassembly/assembly parts list 77
6.2.2 Cleaning parts list 78
6.3 Disassembly/assembly procedure 79
6.3.1 IR upper right cover/IR right cover/IR upper rear cover 79
6.3.2 Left cover/Upper front cover/IR left cover/IR lower left cover/IR upper front cover 80
6.3.3 Original glass/IR front cover 81
6.3.4 Exit tray/Upper rear cover/Lower rear cover/Rear left cover 82
6.3.5 Multi bypass tray left cover/Multi bypass tray right cover/Multi bypass tray upper cover 83
6.3.6 Front door 83
6.3.7 Rear right cover 84
6.3.8 Left cover 85
6.3.9 Control panel (UN201) 86
6.3.10 Tray 1 87
6.3.11 Tray 2 88
6.3.12 Tray 2 rear right cover/Tray 2 rear left cover 89
6.3.13 Tray 2 right rear cover 90
6.3.14 Front cover 91
6.3.15 Mechanical control board (MFPB) 93
6.3.16 DC power supply (DCPU) 95
6.3.17 Scanner motor drive board (SCADB) 100
6.3.18 CCD unit 100
6.3.19 Image processing board (IPB) 102
6.3.20 Relay board (REYB) 104
6.3.21 Printer control board (PRCB) 105
6.3.22 DIMM0 (Work0), DIMM1 (Work1) 108
6.3.23 Hard disk drive (HDD) 109
6.3.24 High voltage unit (HV1) 110
6.3.25 Tray 1 paper size board (PSDTB) 111
6.3.26 PC control board (PCCB) 112

6.3.27 Paper size detect board (PCDTB) 114
6.3.28 Inverter board (INVB) 116
6.3.29 PH interface board (PHICB) 116
6.3.30 Multi bypass unit 118
6.3.31 PH unit 119
6.3.32 Transport drive assy 124
6.3.33 Hopper drive assy 126
6.3.34 Right door assy 128
6.3.35 Scanner motor (M201) 131
6.3.36 Scanner assy 135
6.3.37 Scanner drive cables 136
6.3.38 Original glass moving unit 145
6.3.39 Glass step sheet 148
6.3.40 PWB box 149
6.3.41 Color developing motor (M3) 153
6.3.42 Color PC drum motor (M2) 153
6.3.43 Toner supply motor C/K (M7) 153
6.3.44 Toner supply motor Y/M (M6) 154
6.3.45 Main motor (M1) 154
6.3.46 Fusing drive motor (M4) 155
6.3.47 Fusing pressure roller pressure/retraction motor (M24) 157
6.3.48 Tray 2 lift-up motor (M3-PC) 160
6.3.49 Tray 2 paper feed motor (M1-PC) 160
6.3.50 Tray 2 vertical transport motor (M2-PC) 162
6.3.51 IDC/registration sensor/F, IDC/registration sensor/R (SE1/SE2) 163
6.4 Cleaning procedure 165
6.4.1 PH window 165
6.4.2 Image transfer belt unit 166
6.4.3 Tray 1 feed roller 166
6.4.4 Tray 1 separation roller 166
6.4.5 Bypass tray feed roller 167
6.4.6 Bypass tray separation roller 167
6.4.7 Tray 2 feed roller/tray 2 pick-up roller 168
6.4.8 Tray 2 separation roller 170
6.4.9 Tray 2 transport roller 171
6.4.10 Scanner rail 171
6.4.11 Mirrors (1st/2nd/3rd) 172

6.4.12 Lens 173
6.4.13 Original glass 173
6.4.14 CCD sensor 174
6.5 Mount the original size detection 2 sensor (PC204) 176
6.6 Option counter 178
6.6.1 Installation method for the key counter 178

Adjustment/Setting

7. How to use the adjustment section 181
8. Utility Mode 182
8.1 Touch Panel Adjustment 182
8.2 Utility Mode function tree 183
8.3 Utility Mode function setting procedure 192
8.3.1 Procedure 192
8.3.2 Exiting 192
8.3.3 Changing the setting value in Utility Mode functions 192
8.4 One-Touch Registration 193
8.4.1 Scan 193
8.4.2 Fax 194
8.4.3 User Box 196
8.5 User Setting 197
8.5.1 System Setting 197
8.5.2 Display Setting 200
8.5.3 Initial Setting 204
8.5.4 Copier Setting 204
8.5.5 Scanner Setting 207
8.5.6 Printer Setting 207
8.5.7 Change Password 212
8.5.8 Change E-Mail Address 212
8.6 Administrator Setting 213
8.6.1 System Setting 213
8.6.2 Administrator/Machine Setting 236
8.6.3 One-Touch Registration 236
8.6.4 User Authentication/Account Track 242
8.6.5 Network Setting 246
8.6.6 Copier Setting 274
8.6.7 Printer Setting 275
8.6.8 Fax Setting 276

8.6.9 System Connection 290
8.6.10 Security Setting 291
8.7 Banner Printing 301
9. Adjustment item list 302
10. Service Mode 304
10.1 Service Mode function setting procedure 304
10.2 Service Mode function tree 306
10.3 Date/Time Input mode 309
10.3.1 Date & Time Setting mode screen 309
10.4 Machine 310
10.4.1 Change Warm Up Time 310
10.4.2 Fusing Temperature 311
10.4.3 Fusing Transport Speed 312
10.4.4 Org. Size Detecting Sensor Adj. 312
10.4.5 Printer Area 313
10.4.6 Scan Area 316
10.4.7 Printer Resist Loop 319
10.4.8 Color Registration Adjustment 320
10.4.9 Fusing Loop Size 321
10.4.10 Manual Bypass Tray Adjustment 321
10.4.11 Lead Edge Erase Adjustment 321
10.4.12 Thin Line Prior Detection 321
10.5 Firmware Version 322
10.6 Imaging Process Adjustment 323
10.6.1 Gradation Adjust 323
10.6.2 D Max Density 324
10.6.3 Background Voltage Margin 324
10.6.4 Transfer Output Fine Adjustment 325
10.6.5 Stabilizer 326
10.6.6 Thick Paper Density Adjustment 327
10.6.7 TCR Toner Supply 327
10.6.8 Monochrome Density Adjustment 327
10.6.9 Dev. Bias Choice 328
10.7 CS Remote Care 329
10.7.1 Outlines 329
10.7.2 Setting up the CS Remote Care 329
10.7.3 Software SW setting for CS Remote Care 332
10.7.4 Setup confirmation 337

10.7.5 Calling the maintenance 337
10.7.6 Calling the center from the administrator 338
10.7.7 Checking the transmission log 338
10.7.8 Detail on settings 338
10.7.9 List of the CS Remote Care error code 344
10.7.10 Troubleshooting for CS Remote Care 348
10.8 System 1 349
10.8.1 Marketing Area 349
10.8.2 Tel/Fax Number 349
10.8.3 Serial Number 349
10.8.4 No Sleep 350
10.8.5 Original Size Detection 350
10.8.6 Foolscap Size Setting 350
10.8.7 Initialization 350
10.8.8 Install Date 351
10.8.9 Communication System Setting 351
10.9 System 2 351
10.9.1 HDD 351
10.9.2 Image Controller Setting 352
10.9.3 Option Board Status 353
10.9.4 Consumable Life Reminder 353
10.9.5 Unit Change 353
10.9.6 Software Switch Setting 353
10.9.7 Scan Caribration 354
10.9.8 LCT Paper Size Setting 354
10.9.9 Line Mag Setting 354
10.9.10 Data Capture 355
10.9.11 Thin Line Detect. Setting 357
10.9.12 Stamp 358
10.9.13 Network Fax Settings 359
10.10 Counter 360
10.10.1 Procedure 360
10.10.2 Life 360
10.10.3 Jam 360
10.10.4 Service Call Counter 361
10.10.5 Warning 361
10.10.6 Maintenance 361
10.10.7 Service Total 361

10.10.8 Counter of Each Mode 362
10.10.9 Service Call History (Data) 362
10.10.10 ADF Paper Pages 362
10.10.11 Paper Jam History 362
10.10.12 Fax Connection Error 362
10.10.13 Thin Line Counter 362
10.11 List Output 363
10.11.1 Machine Management List 363
10.11.2 Adjustment List 363
10.11.3 Parameter List 363
10.11.4 Service Parameter 363
10.11.5 Protocol Trace 363
10.11.6 Fax Setting List 363
10.12 State Confirmation 364
10.12.1 Sensor Check 364
10.12.2 Table Number 371
10.12.3 Level History1 372
10.12.4 Level History2 372
10.12.5 Temp. & Humidity 372
10.12.6 CCD Check 372
10.12.7 Memory/HDD Adj. 373
10.12.8 Memory/HDD State 376
10.12.9 Color Regist 376
10.12.10 IU Lot No. 376
10.12.11 Adjustment Data List 376
10.13 Test Mode 377
10.13.1 Procedure for test pattern output 377
10.13.2 Gradation Pattern 377
10.13.3 Halftone Pattern 378
10.13.4 Lattice Pattern 378
10.13.5 Solid Pattern 379
10.13.6 Color Sample 379
10.13.7 8 Color Solid Pattern 380
10.13.8 Running Mode 380
10.13.9 Fax Test 380
10.14 ADF 380
10.15 FAX 380
10.16 Finisher 380

10.17 Internet ISW 381
10.17.1 Internet ISW Set 381
10.17.2 HTTP Setting 381
10.17.3 FTP Setting 382
10.17.4 Forwarding Access Setting 383
10.17.5 Download 384
11. Enhanced Security 385
11.1 Enhanced Security function setting procedure 385
11.1.1 Procedure 385
11.1.2 Exiting 385
11.2 Enhanced Security function tree 385
11.3 Settings in the Enhanced Security 386
11.3.1 CE Password 386
11.3.2 Administrator Password 386
11.3.3 Administrator Feature Level 387
11.3.4 CE Authentication 387
11.3.5 IU Life Stop Setting 387
11.3.6 NVRAM Data Backup 388
12. Billing Setting 389
12.1 Billing Setting function setting procedure 389
12.1.1 Procedure 389
12.1.2 Exiting 389
12.2 Billing Setting function tree 389
12.3 Settings in the Billing Setting 390
12.3.1 Counter Setting 390
12.3.2 Management Function Choice 391
12.3.3 Coverage Rate Clear 396
13. Procedure for resetting 397
13.1 Trouble resetting 397
13.2 Contents to be cleared by reset function 397
14. Mechanical adjustment 398
14.1 Mechanical adjustment of the scanner section 398
14.1.1 Adjustment of the scanner motor belt 398
14.1.2 Focus positioning of the scanner and mirrors unit 401
14.2 Scanner position adjustment 402
14.2.1 Adjusting the height of the original glass moving unit 403
14.2.2 Adjusting the height of the guide support for the original glass moving unit 406
14.3 Mechanical adjustment of the bypass tray section 407

14.3.1 Adjustment of the bypass paper size unit 407
14.4 PH unit mechanical adjustment 409
14.4.1 Skew adjustment 409

Troubleshooting

15. Jam display 411
15.1 Misfeed display 411
15.1.1 Misfeed display resetting procedure 412
15.2 Sensor layout 413
15.3 Solution 415
15.3.1 Initial check items 415
15.3.2 Solution when paper curl occurs 415
15.3.3 Misfeed at tray 1 feed section 416
15.3.4 Misfeed at 2nd image transfer section 417
15.3.5 Misfeed at tray 2 feed, tray 2 vertical transport section 418
15.3.6 Misfeed at manual bypass feed section 419
15.3.7 Misfeed at LCT feed and LCT vertical transport section (PC-403) 420
15.3.8 Misfeed at tray 3 feed and tray 3 vertical transport section (PC-103/PC203) 421
15.3.9 Misfeed at tray 4 feed and tray 4 vertical transport section (PC203) 422
15.3.10 Misfeed at duplex transport section (AD-503) 423
15.3.11 Misfeed at duplex unit pre-registration section (AD-503) 424
15.3.12 Misfeed at fusing/exit section 425
16. Malfunction code 426
16.1 Alert code 426
16.1.1 Alert code list 427
16.2 Solution 429
16.2.1 S-1: CCD clamp/gain adjustment failure 429
16.2.2 D-1: Thin line detection 429
16.2.3 D-2: ADF scanning guide stain detection 429
16.2.4 P-5: IDC sensor (front) failure 430
16.2.5 P-28 IDC sensor (back) failure 430
16.2.6 P-6: Cyan imaging unit failure 430
16.2.7 P-7: Magenta imaging unit failure 430
16.2.8 P-8: Yellow imaging unit failure 430
16.2.9 P-9: Black imaging unit failure 430
16.2.10 P-21: Color shift test pattern failure 431
16.2.11 P-22: Color shift adjust failure 431

16.2.12 P-26: 1st image transfer ATVC (black) failure 431
16.2.13 P-27: 2nd image transfer ATVC failure 431
16.2.14 P-29: 1st image transfer ATVC (color) failure 431
16.2.15 P-30: Color PC drum sensor malfunction 432
16.2.16 P-31: Black PC drum sensor malfunction 432
16.3 Trouble code 433
16.3.1 Trouble code list 433
16.4 How to reset 456
16.5 Solution 457
16.5.1 C0204: Tray 2 elevator failure 457
16.5.2 C0211: Manual tray rise descent error 457
16.5.3 C0301: Suction fan motor's failure to turn 458
16.5.4 C2151: 2nd image transfer roller separation 458
16.5.5 C2152: Transfer belt separation 458
16.5.6 C2253: Color PC drum motor's failure to turn 459
16.5.7 C2254: Color PC drum motor's turning at abnormal timing 459
16.5.8 C2255: Color developing motor's failure to turn 460
16.5.9 C2256: Color developing motor's turning at abnormal timing 460
16.5.10 C2451: Transfer cleaner unit new article release 460
16.5.11 C2551: Abnormally low toner density detected cyan TCR sensor 461
16.5.12 C2553: Abnormally low toner density detected magenta TCR sensor 461
16.5.13 C2555: Abnormally low toner density detected yellow TCR sensor 461
16.5.14 C2552: Abnormally high toner density detected cyan TCR sensor 461
16.5.15 C2554: Abnormally high toner density detected magenta TCR sensor 461
16.5.16 C2556: Abnormally high toner density detected yellow TCR sensor 461
16.5.17 C2557: Abnormally low toner density detected black TCR sensor 462
16.5.18 C2558: Abnormally high toner density detected black TCR sensor 462
16.5.19 C2559: Cyan TCR sensor adjustment failure 463
16.5.20 C255A: Magenta TCR sensor adjustment failure 463
16.5.21 C255B: Yellow TCR sensor adjustment failure 463
16.5.22 C255C: Black TCR sensor adjustment failure 463
16.5.23 C2651: Cyan imaging unit EEPROM access error 464
16.5.24 C2652: Magenta imaging unit EEPROM access error 464
16.5.25 C2653: Yellow imaging unit EEPROM access error 464
16.5.26 C2654: Black imaging unit EEPROM access error 464
16.5.27 C2A01: Cyan toner cartridge EEPROM access error 464
16.5.28 C2A02: Yellow toner cartridge EEPROM access error 464
16.5.29 C2A03: Magenta toner cartridge EEPROM access error 464

16.5.30 C2A04: Black toner cartridge EEPROM access error 464
16.5.31 C3101: Fusing pressure roller separation failure 465
16.5.32 C3201: Fusing drive motor failure to turn 465
16.5.33 C3202: Fusing drive motor turning at abnormal timing..... 465
16.5.34 C3301: Fusing cooling fan motor /1's failure to turn..... 466
16.5.35 C3302: Fusing cooling fan motor /2's failure to turn..... 466
16.5.36 C3451: Heat. heater trouble 467
16.5.37 C3452: Press. heater trouble 467
16.5.38 C3751: Abnormal high temp. (heater) 467
16.5.39 C3752: Abnormal high temp. (press)..... 467
16.5.40 C3851: Abnormal low temp. (heater)..... 467
16.5.41 C3852: Abnormal low temp. (press) 467
16.5.42 C3461: Fusing unit new article release..... 467
16.5.43 C4151: Polygon motor/C failure to turn..... 468
16.5.44 C4152: Polygon motor/M failure to turn 468
16.5.45 C4153: Polygon motor/Y failure to turn..... 468
16.5.46 C4154: Polygon motor/K failure to turn..... 468
16.5.47 C4551: Laser malfunction (cyan)..... 468
16.5.48 C4552: Laser malfunction (magenta) 468
16.5.49 C4553: Laser malfunction (yellow)..... 468
16.5.50 C4554: Laser malfunction (black) 468
16.5.51 C4705: Image output time out 469
16.5.52 C4761: Compression hardware timeout 469
16.5.53 C4765: Extraction hardware timeout 469
16.5.54 C4770: JBIG0 error..... 469
16.5.55 C4771: JBIG1 error..... 469
16.5.56 C4772: JBIG2 error..... 469
16.5.57 C4773: JBIG3 error..... 469
16.5.58 C4780: Compressor 0 command buffer stop failure 469
16.5.59 C4781: Compressor 1 command buffer stop failure 469
16.5.60 C4782: Compressor 2 command buffer stop failure 469
16.5.61 C4783: Compressor 3 command buffer stop failure 469
16.5.62 C5102: Main motor's failure to turn..... 470
16.5.63 C5103: Main motor turning at abnormal timing 470
16.5.64 C5351: Power supply cooling fan motor/1's failure to turn 471
16.5.65 C5353: Cooling fan motor 2's failure to turn..... 471
16.5.66 C5354: Ozone ventilation fan motor's failure to turn 471

16.5.67 C5355: Cooling fan motor 3's failure to turn 472
16.5.68 C5357: Cooling fan motor/1's failure to turn 472
16.5.69 C5358: Power supply cooling fan motor/2's failure to turn 472
16.5.70 C6102: Drive home sensor malfunction 473
16.5.71 C6103: Slider over run 473
16.5.72 C6301: Scanner cooling fan motor's failure to turn 473
16.5.73 C6302: Exposure lamp cooling fan motor's failure to turn 474
16.5.74 C6704: Image input time out 474
16.5.75 C6751: CCD clamp/gain adjustment failure 475
16.5.76 C9401: Exposure lamp's failure to turn ON 475
16.5.77 C9402: Exposure lamp turning ON at abnormal timing 475
16.5.78 CA051: Standard controller configuration failure 476
16.5.79 CA052: Controller hardware error 476
16.5.80 CA053: Controller start failure 476
16.5.81 CC001: Vendor connection failure 476
16.5.82 CC151: ROM contents error upon startup (MSC) 477
16.5.83 CC152: ROM contents error upon startup (Scanner) 477
16.5.84 CC153: ROM contents error upon startup (PRT) 477
16.5.85 CC154: ROM contents error upon startup (PH) 477
16.5.86 CC163: ROM contents error (PRT) 477
16.5.87 CD001: Hard disk initialization abnormality 477
16.5.88 CD002: JOB RAM save error 477
16.5.89 CD004: Hard disk access error 478
16.5.90 CD005: Hard disk error 1 478
16.5.91 CD006: Hard disk error 2 478
16.5.92 CD007: Hard disk error 3 478
16.5.93 CD008: Hard disk error 4 478
16.5.94 CD009: Hard disk error 5 478
16.5.95 CD00A: Hard disk error 6 478
16.5.96 CD00B: Hard disk error 7 478
16.5.97 CD00C: Hard disk error 8 478
16.5.98 CD00D: Hard disk error 9 478
16.5.99 CD00E: Hard disk error A 478
16.5.100 CD00F: Hard disk data transfer error 478
16.5.101 CD020: Hard disk verify error 478
16.5.102 CD010: Hard disk unformat 478
16.5.103 CD011: Hard disk specifications error 479

16.5.104 CD201: File memory mounting error 479
16.5.105 CD202: Memory capacity discrepancy 479
16.5.106 CD203: Memory capacity discrepancy 2 479
16.5.107 CD204: Expanded memory unit not mounted at JScribe able 479
16.5.108 CD211: PCI-SDRAM DMA operation failure 480
16.5.109 CD212: Compression/extraction timeout detection 480
16.5.110 CD231: No Fax memory at FAX board mounting 480
16.5.111 CD241: Encryption board setting error 480
16.5.112 CD242: Encryption board mounting error 480
16.5.113 CD251: No JPEG board mounting at JPEG board mount setting 481
16.5.114 CE001: Abnormal message queue 481
16.5.115 CE003: Task error 481
16.5.116 CE004: Event error 481
16.5.117 CE005: Memory access error 481
16.5.118 CE006: Header access error 481
16.5.119 CE007: DIMM initialize error 481
16.5.120 CD3##: NVRAM data error 482
16.5.121 CE002: Message and method parameter failure 483
16.5.122 CEEE1: MSC undefined malfunction occurring 483
16.5.123 CEEE2: Scanner section undefined malfunction 483
16.5.124 CEEE3: Engine section undefined malfunction 484
17. Power supply trouble 485
17.1 Machine is not energized at all (DCPU operation check) 485
17.2 Control panel indicators do not light. 485
17.3 Fusing heaters do not operate 486
17.4 Power is not supplied to option 486
17.4.1 Automatic document feeder (DF-608) 486
17.4.2 Paper feed cabinet (PC-103/203/403) 486
17.4.3 Duplex unit (AD-503) 487
17.4.4 Finisher (FS-514) 487
18. Image quality problem 488
18.1 How to read element date 488
18.1.1 Table number 488
18.1.2 Level history 1 489
18.1.3 Level history 2 490
18.2 How to identify problematic part 491
18.2.1 Initial check items 491
18.3 Solution 493

18.3.1 Scanner system: white lines in sub scan direction, white bands in sub scan direction, colored lines in sub scan direction, and colored bands in sub scan direction 493
18.3.2 Scanner system: white lines in main scan direction, white bands in main scan direction, colored lines in main scan direction, and colored bands in main scan direction 495
18.3.3 Scanner system: color spots 496
18.3.4 Scanner system: fog 497
18.3.5 Scanner system: blurred image, blotchy image 498
18.3.6 Scanner system: incorrect color image registration, sync shift (lines in main scan direction) 499
18.3.7 Scanner system: moire 500
18.3.8 Scanner system: skewed image 501
18.3.9 Scanner system: distorted image 502
18.3.10 Scanner system: low image density, rough image 503
18.3.11 Scanner system: defective ACS 504
18.3.12 Scanner system: blank copy, black copy 505
18.3.13 Scanner system: abnormal image 506
18.3.14 Scanner system: uneven density 507
18.3.15 Printer monocolor: white lines in sub scan direction, white bands in sub scan direction, colored lines colored bands in sub scan direction 508
18.3.16 Printer monocolor: white lines in main scan direction, white bands in main scan direction, colored lines in main scan direction, colored bands in main scan direction 509
18.3.17 Printer monocolor: uneven density in sub scan direction 510
18.3.18 Printer monocolor: uneven density in main scan direction 511
18.3.19 Printer monocolor: low image density 512
18.3.20 Printer monocolor: gradation reproduction failure 514
18.3.21 Printer monocolor: foggy background 515
18.3.22 Printer monocolor: void areas, white spots 517
18.3.23 Printer monocolor: colored spots 518
18.3.24 Printer monocolor: blurred image 519
18.3.25 Printer monocolor: blank copy, black copy 520
18.3.26 Printer monocolor: uneven image 521
18.3.27 Printer 4-color: white lines in sub scan direction, white bands in sub scan direction, colored lines in sub scan direction, and colored bands in sub scan direction 522
18.3.28 Printer 4-color: white lines in main scan direction, white bands in main scan direction, colored lines in main scan direction, and colored bands in main scan direction 523
18.3.29 Printer 4-color: uneven density in sub scan direction 524

18.3.30 Printer 4-color: uneven density in main scan direction 525
18.3.31 Printer 4-color: low image density 526
18.3.32 Printer 4-color: poor color reproduction 527
18.3.33 Printer 4-color: incorrect color image registration 528
18.3.34 Printer 4-color: void areas, white spots 529
18.3.35 Printer 4-color: colored spots 530
18.3.36 Printer 4-color: poor fusing performance, offset 531
18.3.37 Printer 4-color: brush effect, blurred image 532
18.3.38 Printer 4-color: back marking 533
18.3.39 Printer 4-color: uneven image 534

Appendix

19. Parts layout drawing 535
19.1 Main unit 535
19.1.1 IR section 535
19.1.2 Engine section 536
19.1.3 Tray 1 540
19.1.4 Tray 2/multiple bypass tray 541
19.2 Automatic duplex unit (AD-503) 542
19.3 DF-608 (option) 543
19.4 PC-103/PC-203 (option) 545
19.5 PC-403 (option) 546
19.6 FS-514 (option) 547
19.7 PK-510 (option) 550
19.8 MT-501 (option) 551
19.9 SD-503 (option) 552
20. Connector layout drawing 553
21. Timing chart 556
21.1 Main unit 556
21.2 Automatic document feeder 557
21.2.1 1-sided mode 557
21.2.2 2-sided mode 558

General

1. System configuration

1/2 System front view

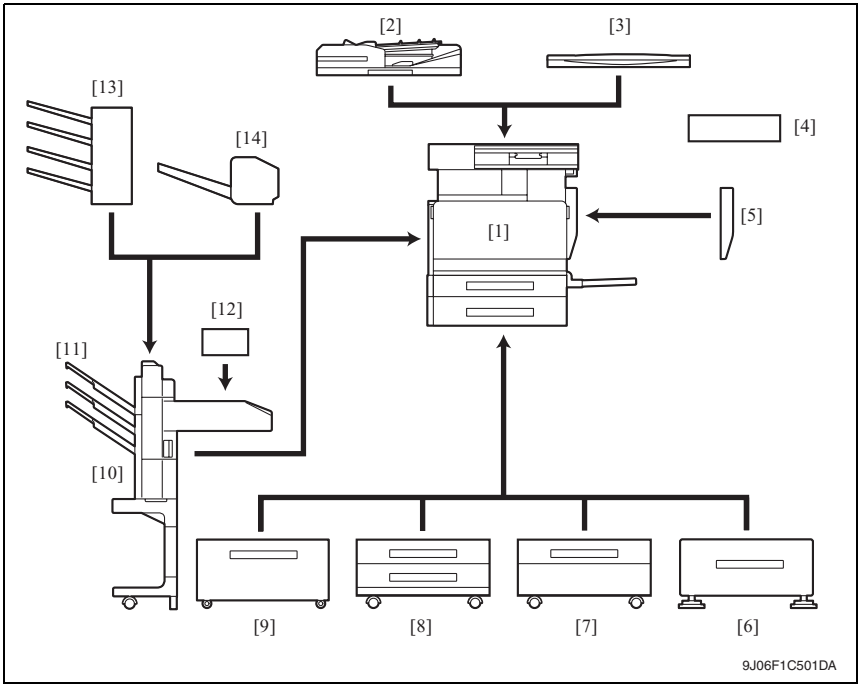

[1]	Machine	[8]	Paper feed cabinet PC-203
[2]	Reverse automatic document feeder DF-608	[9]	Paper feed cabinet PC-403
[3]	Original cover OC-501	[10]	Finisher FS-514
[4]	Working table WT-501	[11]	Output tray OT-601
[5]	Automatic duplex unit AD-503 *1	[12]	Punch kit PK-510
[6]	Desk DK-502	[13]	Mailbin kit MT-501
[7]	Paper feed cabinet PC-103	[14]	Saddle stitcher SD-503

*1 It is the optional setting for bizhub C300 (except for North America and Europe).

NOTE

- **Use the desk or the paper feed cabinet without fail when installing on the floor in order to keep the function and quality of the unit.**

2/2 System rear view

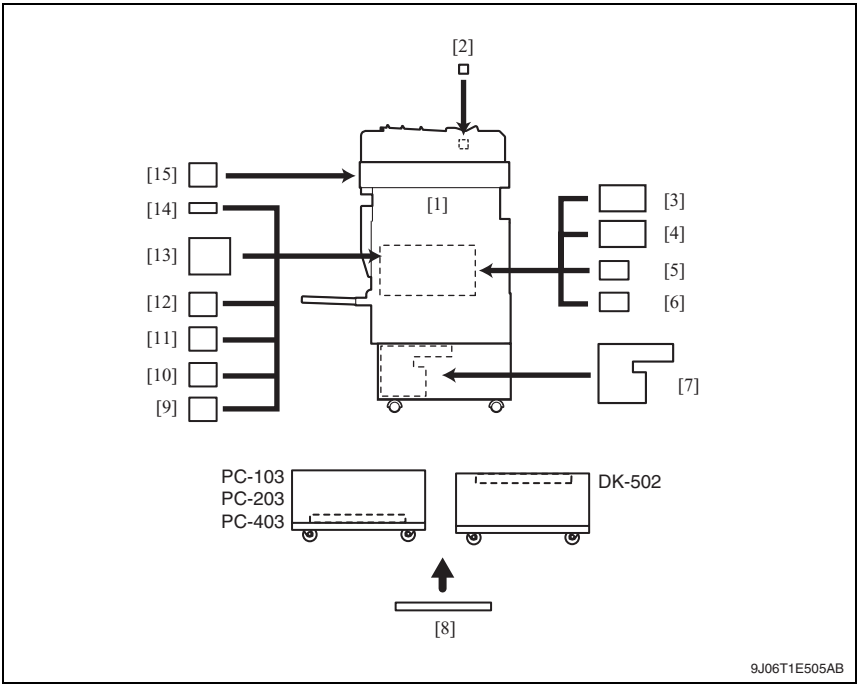

[1]	Machine	[9]	Vendor kit VK-501
[2]	Stamp unit SP-501	[10]	Video interface kit VI-503
[3]	Mount kit MK-704	[11]	Fax multi line ML-501
[4]	Scan accelerator kit SA-501	[12]	Local interface kit EK-702
[5]	Security kit SC-503	[13]	Fax kit FK-502
[6]	Mount kit MK-706	[14]	Expanded Memory Unit EM-309
[7]	Image controller (Fiery) IC-406	[15]	Key counter kit KIT-1
[8]	Dehumidifier heater 1C		

2. Product specifications

A. Type

Type	Desktop/Console *1 scanner/printer
Copying system	Electrostatic dry-powdered image transfer to plain paper
Printing process	Tandem-type indirect electrostatic recording system
PC drum type	OPC (organic photo conductor)
Scanning density	600 dpi
Exposure lamp	White rare-gas fluorescent lamp 30 W
Platen	Stationary (mirror scan)
Original scanning	Scanning in main scanning direction with a CCD (one-shot reading system)
Registration	Rear left edge
Paper feeding separation system	Manual bypass : Small diameter roller separation system Tray 1 : Small diameter roller separation system Tray 2 : Roller separation system
Exposure system	• Four-multi array PH unit system • Two-beam LD + polygon mirror exposure system for Y, M, C, and K (8 beams in total)
Exposure density	Equivalent to 1800 dpi in main scanning direction × 600 dpi in sub scanning direction
Developing system	HMT developing system
Charging system	DC comb electrode scorotron system with electrode cleaning function (manual)
Image transfer system	Belt image transfer system (1st)/roller image transfer system (2nd)
Paper separating system	Selection either application of nonwoven fabric bias or resistor grounding + lower-pressure paper separate claws
Fusing system	Belt fusing

*1: Only when the optional Paper Feed Cabinet/Desk is installed.

B. Functions

Types of original		Sheets, books, and three-dimensional objects	
Max. original size		A3 or 11 x 17	
Max. original weight		Max. 2 kg	
Multiple copies		1 to 999	
Warm-up time		72 sec. or less (at ambient temperature of 23° C/73.4° F and rated source voltage)	
Image loss		Leading edge: 4.2 mm (3/16 inch), Trailing edge: 3 mm (1/8 inch), Rear edge: 3 mm (1/8 inch), Front edge: 3 mm (1/8 inch)	
First copy time	(Tray1, A4 or 8 $^1/_2$ x 11, full size)		
	Monochrome print	6.5 sec. or less	
	Color print	8.5 sec. or less	
Processing speed	Plain paper monochrome/full color	166.63 mm/s	
	Thick paper (90 to 256 g/m^2/ 24.25 to 68 lb), OHP, Post card, Envelope, Label sheet	55.54 mm/s	
Copying speed for multi-copy cycle (A4, 8 $^1/_2$ x 11)	Monochrome/ color copy	bizhub C300; 1-sided: 30 copies/min, 2-sided: 30 copies/min bizhub C352; 1-sided: 35 copies/min, 2-sided: 32 copies/min	
Fixed zoom ratios	Full size	x1.000	
	Reduction	Metric area	x0.500, x0.707, x0.816, x0.866
		Inch area	x0.500, x0.647, x0.733, x0.785
	Enlargement	Metric area	x1.154, x1.224, x1.414, x2.000
		Inch area	x1.214, x1.294, x1.545, x2.000
	Zoom ratios memory	Metric area	3 memories
Variable zoom ratios	×0.250 to ×4.000	Inch area	in 0.001 increments
Copy paper size	Tray1, bypass	Metric area	A3 Wide, A3 to A5, B6S, A6S, Thick paper, Post card
		Inch area	11 x 17 to 5 $^1/_2$ x 8 $^1/_2$S
	Tray2	Metric area	A3 to B5, A5S
		Inch area	11 x 17 to 8 $^1/_2$ x 11, 8 $^1/_2$ x 11S
Copy exit tray capacity	Plain paper	350 sheets	
	Thick paper	20 sheets	
	OHP transparencies	1 sheet	

C. Paper

Type		Paper source (maximum tray capacity)		
		Tray 1	Tray 2	Multiple bypass
Copy paper type	Plain paper (60 to 90 g/m² / 16 to 24 lb)	❍ (250 sheets)	❍ (500 sheets)	❍ (100 sheets)
	Translucent paper	–	–	–
	OHP transparencies (crosswise feeding only)	❍ (20 sheets)	–	❍ (10 sheets)
	Thick paper 1 (91 to 150 g/m² / 24.25 to 40 lb)		–	
	Thick paper 2 (151 to 209 g/m² / 40.25 to 55.5 lb)		–	
	Thick paper 3 (210 to 256 g/m² / 55.75 to 68 lb) *1		–	
	Postcards		–	
	Envelopes		–	
	Labels		–	
	Long size paper (127 to 160 g/m² / 33.75 to 42.5 lb)	–	–	❍ (1 sheet)
Copy paper dimensions	Width	90 to 311.1 mm 3 1/2 to 12 1/4 inch	139.7 to 297 mm 5 1/2 to 11 3/4 inch	90 to 311.1 mm 3 1/2 to 12 1/4 inch
	Length	139.7 to 457.2 mm 5 1/2 to 18 inch	182 to 431.8 mm 7 1/4 to 17 inch	139.7 to 457.2 mm 5 1/2 to 18 inch
	Long size paper (Width x Length)	–	–	210 to 297 mm x 1200 mm or less 8 1/4 to 11 3/4 inch x 47 1/4 inch or less

*1: Image is not guaranteed when thick paper 3 is used.

Optional paper feed cabinet : Only the plain paper weighing 64 to 90 g/m² (17 to 24 lb) is reliably fed.

Automatic duplex unit : Only the plain paper weighing 64 to 90 g/m² (17 to 24 lb) or thick paper weighing 91 to 256 g/m² (24.25 to 68 lb) are reliably fed.

D. Maintenance

		bizhub C300	bizhub C352
Machine durability		800,000 prints or 5 years, whichever is earlier	
No. of pages printed per month (average)	Color print	1,500 prints	2,000 prints
	Monochrome print	6,000 prints	8,000 prints
Standard copy mode	Color print	3 pages/job	4 pages/job
	Monochrome print	3 pages/job	4 pages/job
Standard original density	Color print	C, M, Y, K 5%	
	Monochrome print	K 5%	

E. Machine specifications

		bizhub C300	bizhub C352
Power requirements	Voltage:	AC 100 V, 120 V, 127 V, 220-240 V	
	Frequency:	50/60 Hz ± 3.0 Hz	
⚠1 Max power consumption		1,500 W or less	
Dimensions		650 *2 (W) x 748 (H) x 771 mm *3 (H) 25.5 *2 (W) x 29.5 (D) x 30.25 *3 inch (H)	
Space requirements		1,648 (W) x 1,149 mm (D) *4 64.75 (W) x 45.25 inch (D) *4 1,743 (W) x 1,149 mm (D) *5 68.5 (W) x 45.25 inch (D) *5	
Weight	Machine	Approx. 100 kg / 220.5 lb (without IU and TC) *6 Approx. 103 kg / 226.75 lb (without IU and TC) *7	Approx. 103 kg / 226.75 lb (without IU and TC)
	IU and TC	9.1 kg / 20.0 lb	

*2: Width when the manual bypass tray is closed
*3: Height up to the original glass
*4: Space requirements are the values when the finisher is slid to the maximum, the paper feed tray is slid to the maximum, and the front door is open.
*5: When the optional saddle stitcher SD-503 is mounted to the finisher.
*6: Only for the areas except for North America and Europe.
*7: Only for North America and Europe.

F. Operating environment

Temperature	10 to 30 °C / 50 to 86° F (with a fluctuation of 10° C / 18° F or less per hour)
Humidity	15 to 85% (Relative humidity with a fluctuation of 10%/h)
Levelness	Difference between front and back, right and left should be 1 degree or under.

G. Print functions

Type	Built-in printer controller	
CPU	PPC750 FX 600 MHz	
⚠1 RAM	1 GB (shared with the C300/C352 main unit)	
HDD	40 GB (shared with the C300/C352 main unit)	
Interface	Standard	10 Base-T/100 Base-TX
	Option	USB 2.0/1.1, IEEE1284
Supported protocols	TCP/IP, IPX/SPX, NETBEUI, Apple Talk (EtherTalk)	
Print speed (A4, 8 1/2 x 11)	Monochrome print	C352; Single-sided: 35 ppm, double-sided: 32 ppm C300; Single-sided: 30 ppm, double-sided: 30 ppm
	Color print	C352; Single-sided: 35 ppm, double-sided: 32 ppm C300; Single-sided: 30 ppm, double-sided: 30 ppm
Printer language	PCL5e/c Emulation PCL6 (XL Ver. 2.1) Emulation PostScript 3 Emulation (3011)	
Print resolution	Equivalent to 1800 dpi in main scanning direction × 600 dpi in sub scanning direction	
Printer fonts	PCL Latin 80 Fonts Postscript 3 Emulation Latin 136 Fonts	
Supported operating systems	Server	Windows NT 4.0, Windows 2000, or Windows Server 2003
	Client	Windows 98 Second Edition, Windows Me, Windows 2000, Windows XP, or Windows NT 4.0 (SP6a) Mac OS 9.2 or later or Mac OS X 10.2 or 10.3 Linux

H. Scan functions

Driver	KONICA MINOLTA scanner driver	
Compatible operating systems	Windows 98/98SE/Me, Windows NT 4.0 (SP6 or later), Windows 2000, Windows XP	
Scan speed (A4, 8 1/2 x 11) 300 dpi / DF-608	Monochrome	65 pages/min
	Full color	50 pages/min
Scannable range	Same as the copier (Max. A3)	
Functions	Scan to E-mail, Scan to FTP, Scan to SMB, Scan to BOX	
Resolution	200/300/400/600 dpi	

NOTE

- **These specifications are subject to change without notice.**

Blank Page

Maintenance

3. Periodical check

3.1 Service schedule

3.1.1 Main unit

Guarantee period (5-year or 800,000 prints)

	Per cycle × print number	× 10,000-print															Number of times
		6	12	18	20	24	30	36	40	42	48	54	60	66	72	78	
Main unit	Upon each call (60,000)	●	●	●		●	●	●		●	●	●	●	●	●	●	13
	120,000		●			●		●			●		●		●		6
	200,000				●				●				●				3
	300,000						●						●				2

3.1.2 Option

	Per cycle × print number	× 10,000-print															Number of times
		5	10	15	20	25	30	35	40	45	50	55	60	65	70	75	
DF-608	50,000	●	●	●		●	●	●		●	●	●	●	●	●	●	15
	200,000				●				●				●				3

	Per cycle × print number	× 10,000-print															Number of times
		6	12	18	20	24	30	36	40	42	48	54	60	66	72	78	
PC-103 PC-203 PC-403	300,000						●						●				2
AD-503	60,000	●	●	●		●	●	●		●	●	●	●	●	●	●	13
FS-514	300,000						●						●				2

3.2 Maintenance items

3.2.1 Parts to be replaced by users (CRU)

No.	Class	Parts to be replaced	Cycle	Clean	Replace	Descriptions
1	Processing sections	Imaging unit C/M/Y	45 K		●	*3
2		Imaging unit K	70 K		●	*3
3		Dust filter/cooling fan	25 K		●	*1
4		Comb electrode	When TC is replaced	●		
5		Toner cartridge C/M/Y	12 K		●	*3
6		Toner cartridge K	20 K		●	*2, 3
7	Fusing section	Deodorant filter	20 K		●	*2
8	Image transfer section	Waste toner bottle	(25 K)		●	*1, 3, 4

*1: Also replace the dust filter/cooling fan packed in the waste toner bottle at the same time when the waste toner bottle is replaced.
*2: Also replace the deodorant filter packed in the toner cartridge K at the same time when 20 K is reached.
*3: The parts can be replaced either by user or customer engineer.
For details of setting, see [Unit Change] on “Adjustment/Setting.”
See P.353
*4: A waste toner full condition is detected with detecting the actual waste toner emissions.

3.2.2 Maintenance call (per 50,000/60,000-print)

No.	Class	Parts to be replaced	Quantity	Check	Clean	Replace	Lubrica-tion	Descrip-tions
1	Overall	Paper feed and image conditions		●				
2		Appearance		●	●			
3	Conveyance section	Registration roller			●			
4	Image transfer section	Around waste toner port			●			
5	DF-608	Pick-up roller			●			
6		Feed roller			●			
7		Separation roller			●			
8		Rollers and rolls			●			
9		Scanning guide			●			
10		Reflective sensor section			●			
11	AD-503	DUP roller and rolls			●			

3.2.3 Periodical parts replacement 1 (per 120,000-print)

No.	Class	Parts to be replaced	Quantity	Check	Clean	Replace	Lubrica-tion	Descrip-tions
1	Overall	Paper feed and image conditions		●				
2		Appearance		●	●			
3	Conveyance section	2nd image transfer roller unit	1			●		*1
4		Dust filter/vertical conveyance	1			●		
5	Image transfer section	Image transfer belt unit	1			●		
6	Processing section	Ozone filter	1			●		
7	Image transfer section	Image transfer entrance guide			●			
8		IDC/registration sensor F, R			●			

*1: Replace those four parts at the same time.

3.2.4 Periodical parts replacement 2 (per 200,000-print)

No.	Class	Parts to be replaced	Quantity	Check	Clean	Replace	Lubrica-tion	Descrip-tions
1	Overall	Paper feed and image conditions		●				
2		Appearance		●	●			
3	Tray 1 bypass	Feed roller	1			●		
4		Separation roller assy	1			●		
5	DF-608	Pick-up roller	2			●		
6		Feed roller	1			●		
7		Separation roller	1			●		

3.2.5 Periodical parts replacement 3 (per 300,000-print)

No.	Class	Parts to be replaced	Quantity	Check	Clean	Replace	Lubrica-tion	Descrip-tions
1	Overall	Paper feed and image conditions		●				
2		Appearance		●	●			
3	Tray 2	Pick-up roller	1			●		
4		Feed roller	1			●		
5		Separation roller assy	1			●		
6	Fusing section	Fusing unit	1			●		
7	PC-103 PC-203 PC-403	Pick-up roller	1			●		*1
8		Feed roller	1			●		
9		Separation roller assy	1			●		
10	FS-514	Paper feed roller, roll			●			
11		Paper feed roller, roll			●			

*1: Replace those three parts at the same time.

3.3 Maintenance parts

- To ensure that the machine produces good copies and to extend its service life, it is recommended that the maintenance jobs described in this schedule be carried out as instructed.
- Replace with reference to the numeric values displayed on the Life counter.
- Maintenance conditions are based on the case of A4 or 8 $^1/_2 \times 11$, standard mode and low power mode OFF.

* Standard mode

	Color	B/W
bizhub C352	4 pages per job	4 pages per job
bizhub C300	3 pages per job	3 pages per job

3.3.1 Replacement parts

A. Main unit

No.	Classification	Parts name	Quantity	Actual durable cycle *1	Parts No.	Descriptions	Ref. page
1	Tray 1	Feed roller	1	200 K	4034 3012 ##		P.17
2		Separation roller assy	1	200 K	4034 0151 ##		P.17
3	Bypass	Feed roller	1	200 K	4034 3001 ##		P.18
4		Separation roller assy	1	200 K	4034 0151 ##		P.20
5	Tray 2	Feed roller	1	300 K	4030 3005 ##		P.22
6		Separation roller assy	1	300 K	4030 0151 ##		P.21
7		Pick-up roller	1	300 K	4030 3005 ##		P.25
8	Conveyance section	2nd image transfer roller unit	1	120 K	—	*2	P.31
9		Dust filter/ vertical conveyance	1	120 K	—	*2	P.30
10	Fusing section	Fusing unit	1	300 K	9J06 R706 ## *5 9J06 R707 ## *6 9J06 R734 ## *7		P.39
11		Deodorant filter	1	20 K	—	*3	P.29
12	Processing section	Imaging unit Y/M/C	1	45 K	—		P.36
13		Imaging unit K	1	70 K	—		P.36
14		Ozone filter	1	120 K	—	*2	P.29
15		Toner cartridge Y/M/C	1	12 K	—		P.35
16		Toner cartridge K	1	20 K	—	*3	P.35
17		Dust filter/cooling fan	1	25 K	—	*4	P.30
18	Image transfer section	Image transfer belt unit	1	120 K	9J06 R704 ##	*2	P.32
19		Waste toner bottle	1	(25 K)	4065 611	*4, 8	P.28

*1: Actual durable cycle is the life counter value.
*2: Also replace the 2nd Image transfer roller unit, dust filter/vertical conveyance and ozone filter packed in the Image transfer belt unit at the same time when 120 K is reached. (Part No. of the image transfer belt unit: 9J06 R704 ##)
*3: Also replace the deodorant filter packed in the toner cartridge K at the same time when 20 K is reached.

*4: Also replace the dust filter/cooling fan packed in the waste toner bottle at the same time when the waste toner bottle is replaced.
*5: 110 V to 120 V areas only.
*6: 220-240 V areas only.
*7: Taiwan only.
*8: A waste toner full condition is detected with detecting the actual waste toner emissions.

B. Option

No.	Classification	Parts name	Quantity	Actual durable cycle *1	Parts No.	Descrip-tions	Ref.Page
1	DF-608	Pick-up roller	2	200 K	9J07 3301 ##	Replace those three parts at the same time.	*2
2		Feed roller	1	200 K	4030 3005 ##		
3		Separation roller	1	200 K	9J07 3409 ##		
4	PC-103 PC-203 PC-403	Pick-up roller	1	300 K	4030 3005 ##	Replace those three parts at the same time.	
5		Feed roller	1	300 K	4030 3005 ##		
6		Separation roller assy	1	300 K	4030 0151 ##		

*1: Actual durable cycle is the life counter value.
*2: See each option Service Manual.

3.3.2 Cleaning parts

No.	Classification	Parts name	Actual cleaning cycle *1	Descrip-tions	Ref.Page
1	Processing section	Comb electrode	When TC is replaced		P.36
2	Conveyance section	Registration roller	Upon each call (60 K)		P.27
3	Image transfer section	Area around the Waste toner collecting port	Upon each call (60 K)		P.29
4		Image transfer entrance guide	When image transfer belt is replaced (120 K)		P.34
5		IDC/registration sensor F, R			P.34
6	DF-608	Pick-up roller	50 K		*1
7		Feed roller			
8		Separation roller			
9		Rollers and rolls			
10		Scanning guide			
11		Reflective sensor section			
12	AD-503	Conveyance roller	Upon each call (60 K)		*2
13	FS-514	Rollers and rolls	300 K		*3
14		Paddle			

*1: See DF-608 Service Manual.
*2: See AD-503 Service Manual.
*3: See FS-514 Service Manual.

3.4 Concept of parts life

	Description	Life value (Specification value)	Max. number of printed pages
Waste toner bottle	A waste toner full condition is detected when about 2,500 printed pages have been produced after a waste toner near full condition has been detected.	–	25,000 *1,2
Fusing unit	The number of copies made is counted. *5 When the maximum number of printed pages is reached, the print is inhibited.	300,000	370,000 *3
Transfer belt unit	The number of copies made is counted. *5 The number of copies made is compared with the value of the number of hours through which the belt has turned translated to a corresponding value of the number of copies made and the value, whichever reaches the life specifications value, is detected. (However the maximum number of copies is detected by counting hours through which the belt has turned.) When the maximum number of printed pages is reached, the print is inhibited.	120,000	C352: 148,687 *3 C300: 148,386 *3
Imaging unit C/M/Y	The hours which the PC drum has turned is compared with the value of the number of hours through which the Imaging roller has turned translated to a corresponding value of hours and the value, whichever reaches the life specification value, is detected. * The hours which the PC drum has turned is the value of the number of distance through which the PC drum has run translated to a corresponding value of the number of hours and the value.	3,665 M *4	3,774 M *4
Imaging unit /K		3,856 M *4	3,964 M *4

*1: A waste toner full condition is detected with detecting the actual waste toner emissions.
*2: Once the toner-full is detected, it has to be replaced with the new waste toner bottle in order to reset.
*3: The initiation of any new print cycle is inhibited when the maximum number of printed pages is reached.
*4: The mark “M” is indicated the value of the number of distance through which the PC drum has run translated to a corresponding value of the number of hours and the value.
*5: The count condition is different according to the paper length of the sub scanning direction.

Paper length of sub scanning direction	Count value
Less than 216 mm	1 count
216 mm to 432 mm	2 counts
432 mm to 648 mm	3 counts
648 mm to 864 mm	4 counts
over 864 mm	5 counts

A. Conditions for life specifications values

- The life specification values represent the number of copies made or figures equivalent to it when given conditions (see the table given below) are met. They can be more or less depending on the machine operating conditions of each individual user.

Item		Description
Job type	bizhub C352	Monochrome : Making 4 copies per job Color : Making 4 copies per job
	bizhub C300	Monochrome : Making 3 copies per job Color : Making 3 copies per job
Paper size		A4 / 8 $^1/_2$ x 11
Color ratio		Black to Color = 4:1
CV/M	bizhub C352	Black: 8,000 / Color: 2,000
	bizhub C300	Black: 6,000 / Color: 1,500
Original density		B/W = 5 % for each color, 5 % for monochrome
No. of operating days per month		20 days (main power switch turned ON and OFF 20 times per month)

B. Control causing inhibited printing for one part when an inhibited-printing event occurs in another part

Purpose	In order to reduce the maintenance call times: when printing prohibiting is reached for any of the following parts, make printing prohibited also for other parts whose life value is reached, and replace those parts at the same time.
Target parts	Fusing unit, image transfer belt unit, imaging unit /C, imaging unit /M, imaging unit /Y, imaging unit /K

3.5 Maintenance procedure (periodical check parts)

NOTE

- **The alcohol described in the cleaning procedure of maintenance represents the isopropyl alcohol.**

3.5.1 Replacing the tray 1 feed roller

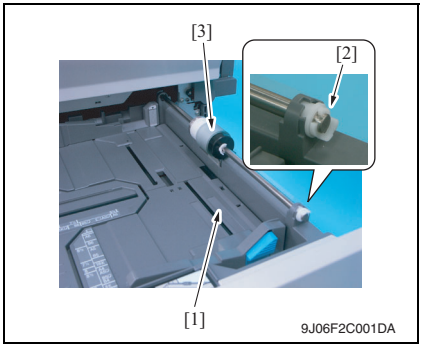

1. Slide out the tray 1.
2. Lock the paper lifting plate [1] into position.
3. Snap off the C-clip [2] from the tray 1 feed roller assy [3].
4. Remove the shaft for the tray 1 feed roller assy [3] from the front bushing.

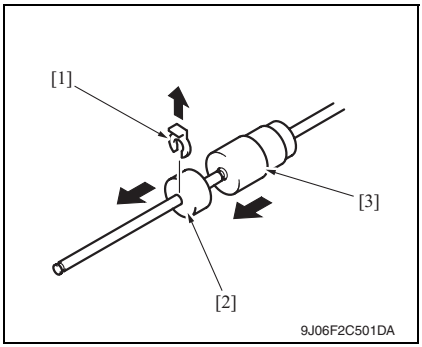

5. Snap off the C-clip [1], one collar [2] and remove the tray 1 feed roller [3].
6. To reinstall, reverse the order of removal.
7. Select [Service Mode]→ [Counter] → [Life] and clear the count of [1st.].

NOTE

- **Replace the tray 1 feed roller and tray 1 separation roller at the same time.**

3.5.2 Replacing the tray 1 separation roller assy

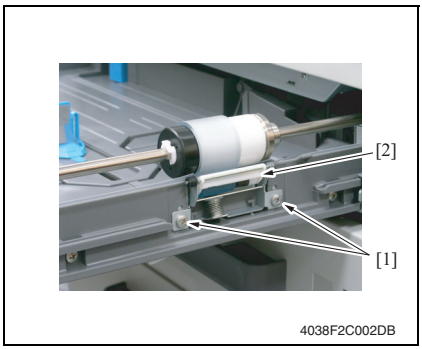

1. Slide out the tray 1.
2. Remove two screws [1] and the tray 1 separation roller mounting bracket assy [2].

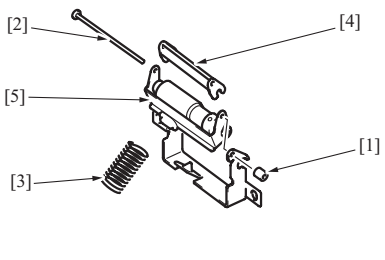

9J06F2C502DA

3. Take off the rubber stopper [1], shaft [2], spring [3], and guide plate [4] to remove the paper separation roller fixing bracket assy [5].

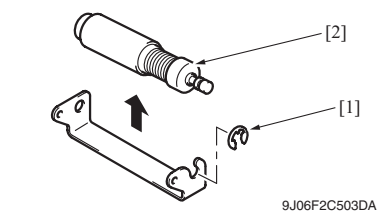

9J06F2C503DA

4. Snap off the E-ring [1] and the tray 1 paper separation roller assy [2].
5. To reinstall, reverse the order of removal.
6. Select [Service Mode] → [Counter] → [Life] and clear the count of [1st.].

NOTE

- **Replace the tray 1 feed roller and tray 1 separation roller at the same time.**

3.5.3 Replacing the bypass tray feed roller

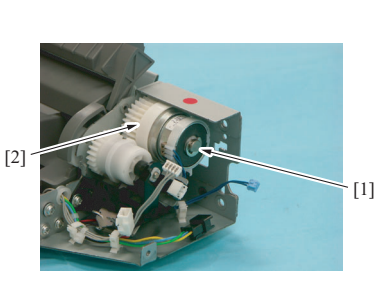

4038F2C004DA

1. Remove the multi bypass unit.
See P.118
2. Snap off the E-ring [1], and remove bypass paper feed clutch [2].

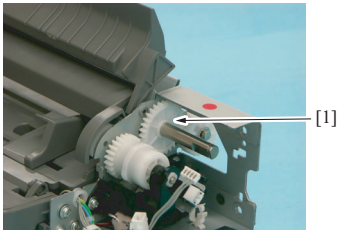

9J06F2C504DA

3. Remove the gear [1].

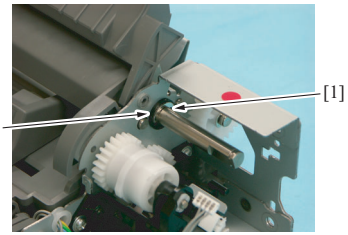

9J06F2C505DA

4. Snap off the E-ring [1] and remove the bearing [2].

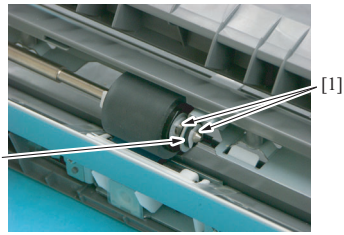

9J06F2C506DA

5. Snap off two C-ring [1], and remove the bearing [2].

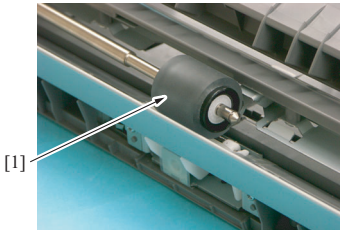

9J06F2C507DA

6. Remove the bypass tray feed roller [1].
7. To reinstall, reverse the order of removal.
8. Select [Service Mode] → [Counter] → [Life] and clear the count of [Manual Tray].

NOTE

- **Replace the bypass tray feed roller and the bypass separation roller assy at the same time.**

3.5.4 Replacing the bypass tray separation roller assy

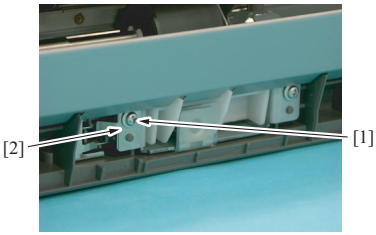

4038F2C009DA

1. Remove the multi bypass unit.
See P.118
2. Remove the screw [1], and remove the ground terminal [2].

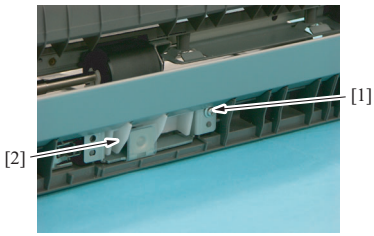

9J06F2C508DA

3. Remove the screw [1], and remove the bypass paper separation roller assy [2].

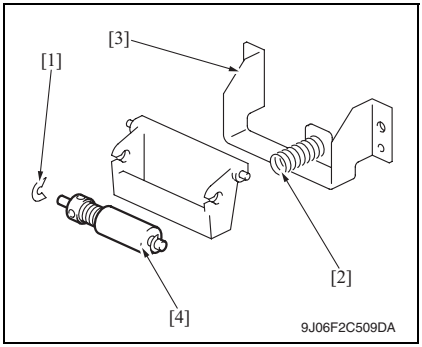

4. Snap off the C-clip [1], and remove the spring [2] and the guide plate [3]. Remove the bypass paper separation roller assy [4].
5. To reinstall, reverse the order of removal.
6. Select [Service Mode] → [Counter] → [Life] and clear the count of [Manual Tray].

NOTE

- **Replace the bypass tray feed roller and the bypass separation roller assy at the same time.**

3.5.5 Replacing the tray 2 separation roller

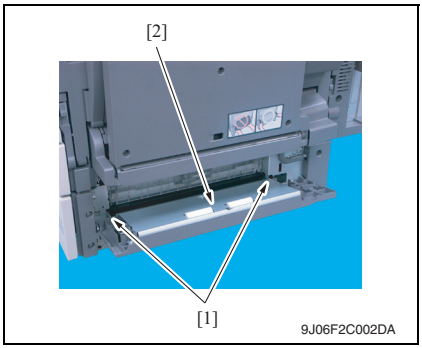

1. Slide out the tray 2.
2. Open the vertical transport door.
3. Remove two claws [1], and remove the vertical transport door [2].

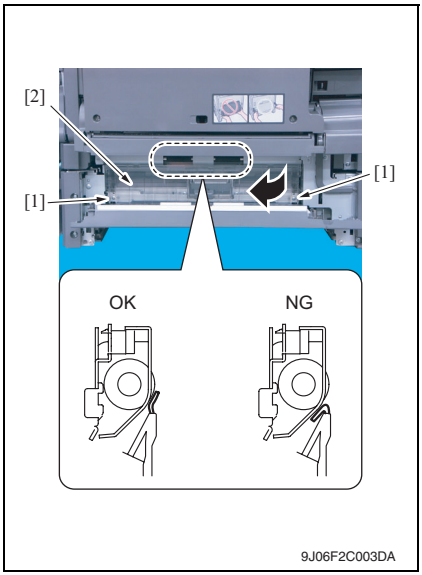

4. Remove two screws 1], and remove the jam clearing cover [2].

NOTE

- **When installing the jam clearing cover, make sure that the mylar is set to correct position.**

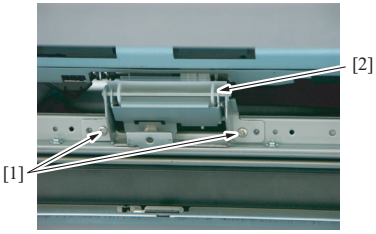

9J06F2C510DA

5. Remove two screws [1] and the tray 2 separation roller installation plate assy [2].

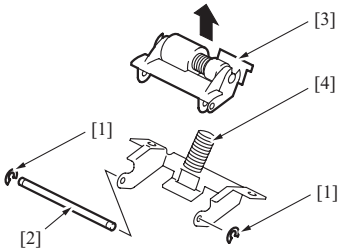

9J06F2C511DA

6. Remove two C-rings [1] and the shaft [2], and remove the separation roller fixing plate assy [3].

NOTE

- **Use care not to miss the spring [4].**

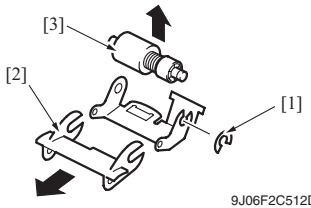

9J06F2C512DA

7. Remove the C-ring [1] and guide [2], and remove the tray 2 separation roller assy [3].

3.5.6 Replacing the tray 2 feed roller

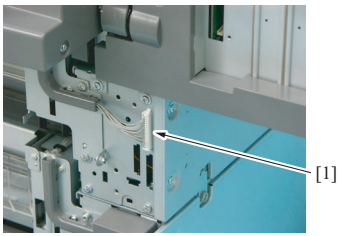

4038F2C014DA

1. Remove the tray 2 separation roller installation plate assy.

See the procedures 1 to 5 in “Tray 2 separation roller.”
See P.21

2. Remove the tray 2 right rear cover.

See P.90

3. Disconnect the connector [1].

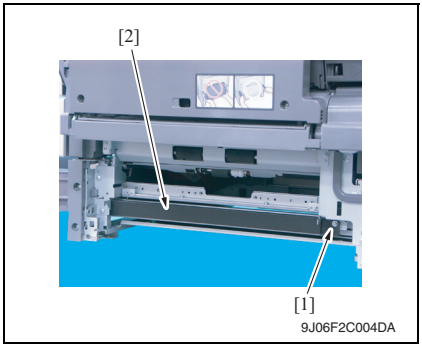

4. Remove the screws [1] and remove the reinforcement plate [2].

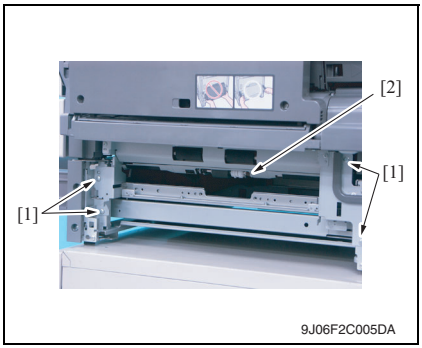

5. Remove four screws [1] and remove the tray 2 feed roller assy [2].

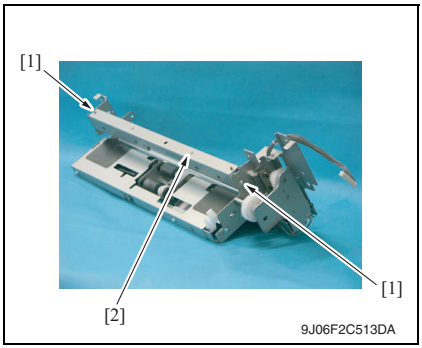

6. Remove two screws [1] and the installation flame [2] of the tray 2 Separation roller installation plate assy.

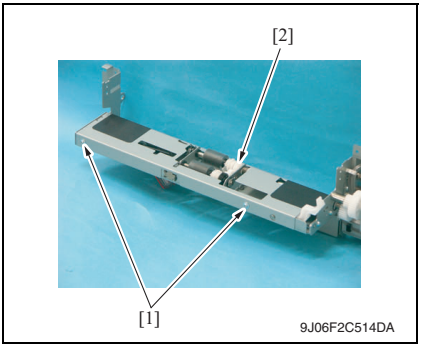

7. Remove two screws [1] and tray 2 feed roller cover [2].

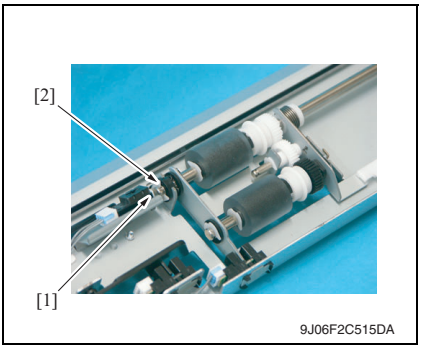

8. Remove the C-ring [3] and bushing [4].

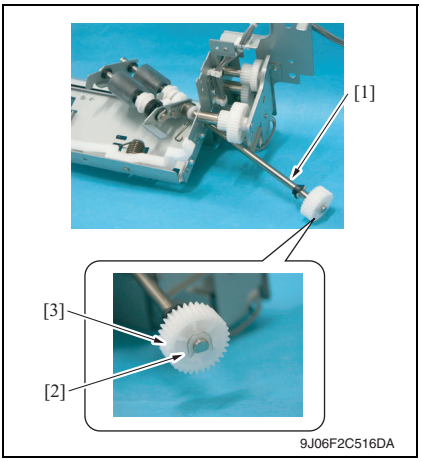

9. Remove the C-ring [1] and gear [2] while sliding out the shaft assy [3] in the direction indicated in left figure.

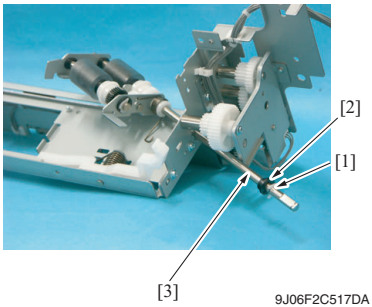

10. Remove the C-ring [1] and bushing [2], and remove the shaft assy [3].

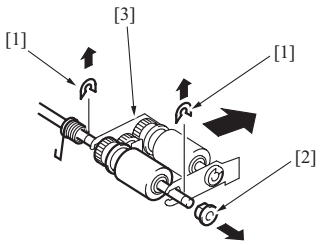

11. Remove two E-rings [1] and bushing [2], and remove the tray 2 pick-up roller fixing plate assy [3].

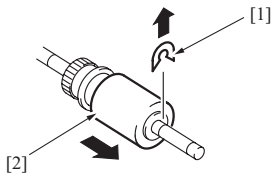

12. Remove the C-ring [1] and tray 2 feed roller [2].

13. Select [Service Mode] → [Counter] → [Life] and clear the count of [2nd.].

3.5.7 Replacing the tray 2 pick-up roller

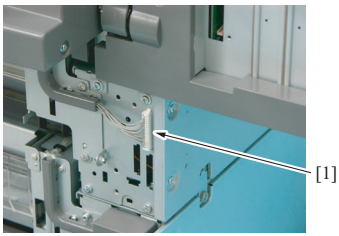

1. Remove the tray 2 separation roller installation plate assy.

See the procedures 1 to 5 in “Tray 2 separation roller.”
See P.21

2. Remove the tray 2 right rear cover.

See P.90

3. Disconnect the connector [1].

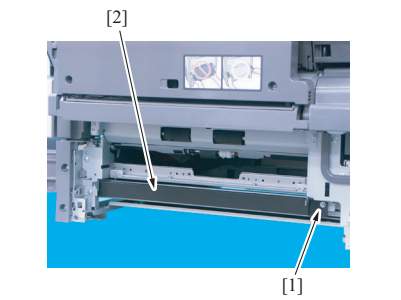

9J06F2C004DA

4. Remove the screws [1] and remove the reinforcement plate [2].

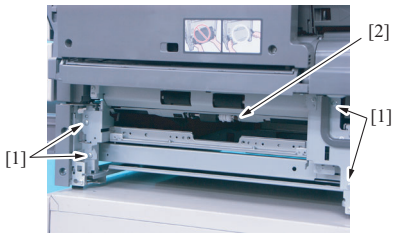

9J06F2C005DA

5. Remove four screws [1] and remove the tray 2 feed roller assy [2].

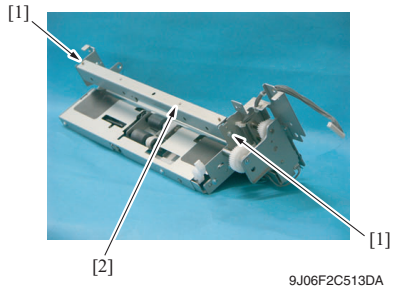

9J06F2C513DA

6. Remove two screws [1], and remove the tray 2 separation roller installation plate assy [2] together with frame.

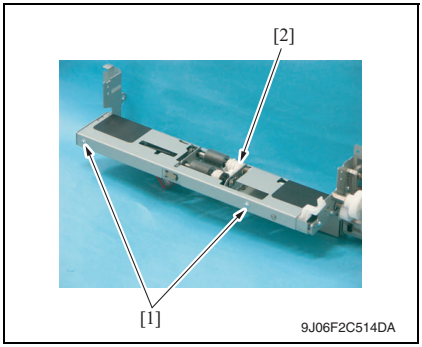

7. Remove two screws [1] and tray 2 feed roller cover [2].

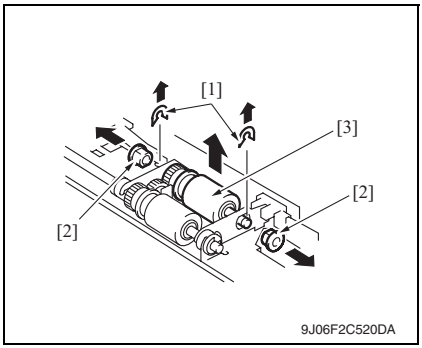

8. Remove two C-rings [1] and two bushings [2], and remove the tray 2 pick-up roller assy [3].

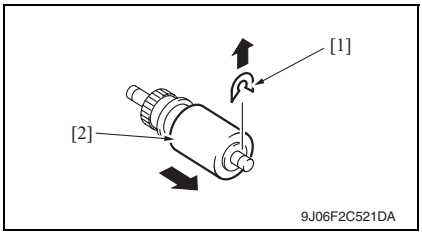

9. Snap off the C-ring [1], and remove the tray 2 pick-up roller [2].

3.5.8 Cleaning of the registration roller

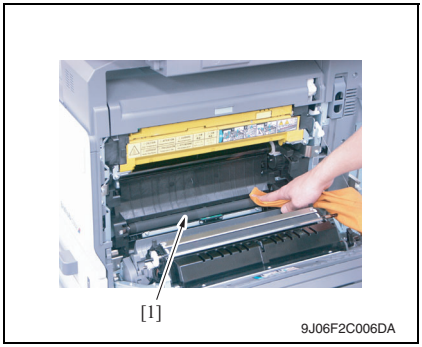

1. Open the right door.
2. Using a soft cloth dampened with alcohol, wipe the registration rollers [1] clean of dirt.

3.5.9 Replacing the waste toner bottle

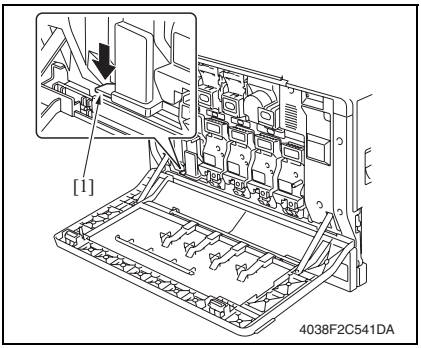

1. Open the front door.
2. Press the waste toner bottle release lever [1].

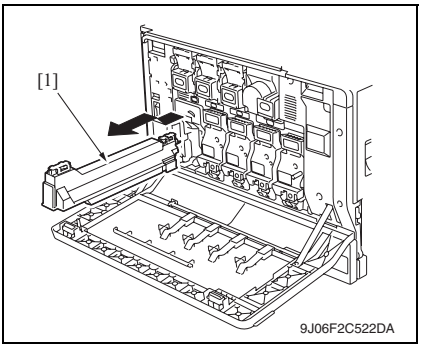

3. Remove the waste toner bottle [1].

NOTE

- **Raise the waste toner bottle gently before removing it.**
- **If scattered toner has accumulated in the vicinity of the toner collecting port, do not tilt the waste toner bottle when removing it.**
- **Do not leave the waste toner bottle in a tilted condition after removing it.**

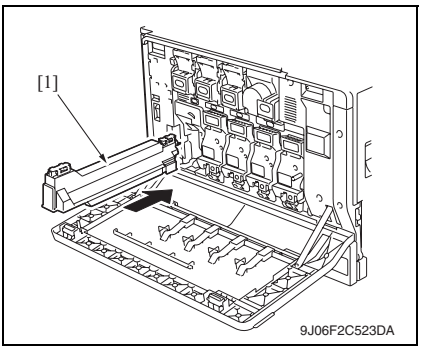

4. Clean the surface around the waste toner collecting port.

See P.29

5. Remove the waste toner bottle from its box, and remove the packing material.
6. Set the waste toner bottle [1] in place.
7. Close the front door.

NOTE

- **Replace the dust filter/cooling fan supplied with the waste toner bottle at the same time.**

3.5.10 Cleaning of the area around the waste toner collecting port

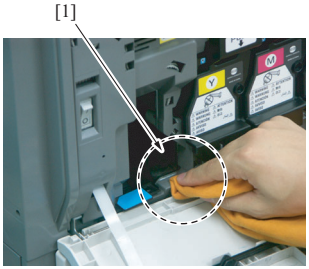

4038F2C018DB

1. Remove the waste toner bottle.
See P.28
2. Wipe the areas around the waste toner collecting port [1] clean of spilled toner and dirt using a soft cloth dampened with water or alcohol.

3.5.11 Replacing the ozone filter

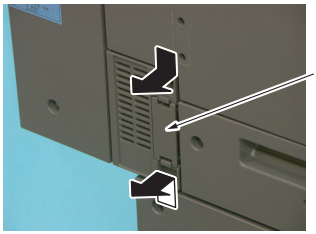

4038F2C019DA

1. Holding onto the hook, remove the ozone filter [1].

NOTE

- **The ozone filter is supplied with the Transfer belt unit.**
  Replace it when replacing the Transfer belt unit.

3.5.12 Replacing the deodorant filter

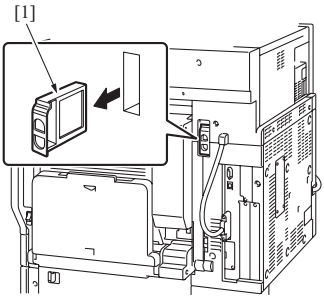

9J06F2C648DA

1. Holding onto the hook, take out the deodorant filter [1].

NOTE

- **The deodorant filter is supplied with the toner cartridge (black).**
  Replace it when replacing the toner cartridge (black).

3.5.13 Replacing the dust filter/vertical conveyance

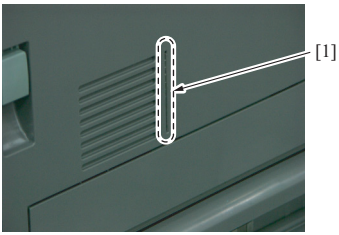

4038F2C020DB

1. If the optional automatic duplex unit is mounted, remove it.

See automatic duplex unit AD-503 Service Manual.
See P.6

2. Remove the dust filter/vertical conveyance [1].

NOTE

- **The dust filter/vertical conveyance is supplied with the transfer belt unit.**
  Replace it when replacing the transfer belt unit.

3.5.14 Replacing the dust filter/cooling fan

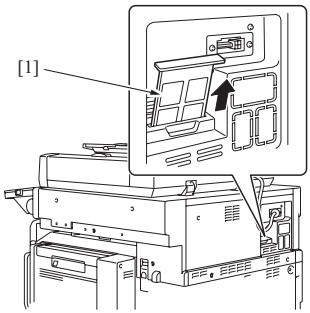

4038F2C544DA

1. If the dust filter/cooling fan is contaminated by dust or foreign matter, clean it up.
2. Remove the dust filter/cooling fan [1].

NOTE

- **The dust filter/cooling fan is supplied with the waste toner bottle.**
  Replace it when replacing the waste toner bottle.

3.6 Replacing the unit

3.6.1 Replacing the 2nd image transfer roller unit

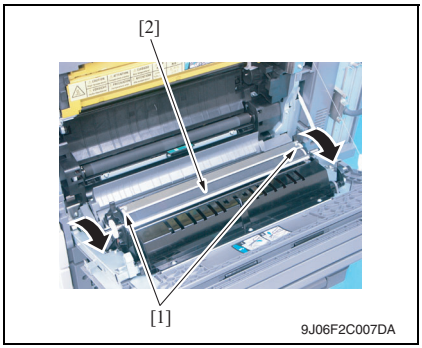

A. Removal procedure

1. Open the front door and turn OFF the main power switch.
2. Open the right door.
3. Unlock the lock levers [1] (at two places).
4. Holding onto the lock levers [1] (at two places), remove the 2nd image transfer roller unit [2].

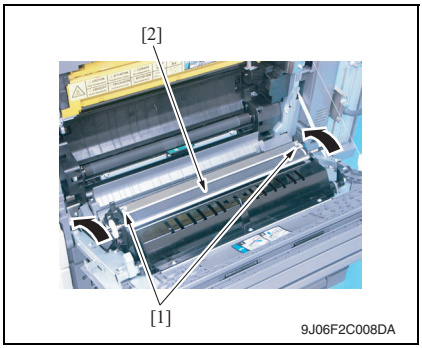

B. Reinstallation procedure

1. Holding onto the lock levers [1] (at two places), mount the 2nd image transfer roller unit [2].
2. Lock the lock levers [1](at two places).
3. Close the right door.

NOTE

- **Make sure that the door is locked in position both at front and rear.**

4. Turn ON the main power switch.
5. Close the front door.

NOTE

- **The 2nd image transfer roller unit is supplied with the transfer belt unit. Replace it when replacing the transfer belt unit.**

3.6.2 Replacing the image transfer belt unit

A. Removal procedure

1. Open the front door and turn OFF the main power switch.
2. Remove the waste toner bottle

See P.28

3. Slide out the imaging unit (C/M/Y/K).

See P.36

NOTE

- **After the imaging unit has been removed from the main unit, be sure to place it in the plastic bag (black) or wrap it in a light shielding cloth, and store it in a dark place.**
  Do not leave the Imaging unit exposed to light for a extended period of time, as it may become damaged.

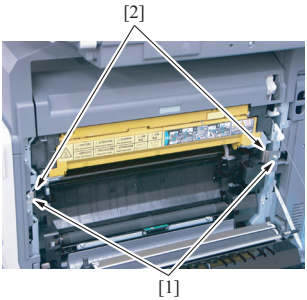

9J06F2C009DA

4. Open the right door.
5. Remove two screws [1] and release the lock of the image transfer belt unit [2].

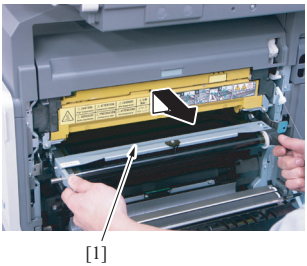

9J06F2C010DA

6. Hold the both sides and lift it to take out the image transfer belt unit [1] a little.

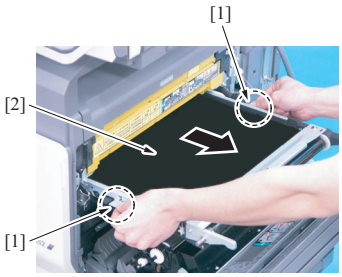

9J06F2C011DA

7. Hold the position [1] as shown in the left and remove the image transfer belt unit [2].

NOTE

- **Do not touch the surface of the Image transfer belt unit.**
- **Cover the image transfer belt unit with something such shade cloth to protect its surface from dust or foreign matter.**

8. Clean the image transfer entrance guide and the surface of the IDC/registration sensors.

See P.34

B. Reinstallation procedure

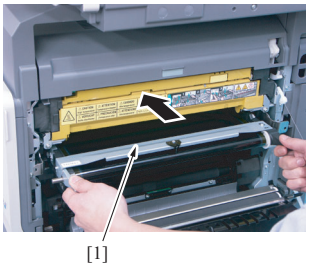

9J06F2C012DA

1. Insert the transfer belt unit [1].

NOTE

- **Insert the transfer belt unit with care not to allow its docking gear to be damaged by hitting it against the rail or associated part.**
- **Do not touch the surface of the image transfer belt unit.**
- **Cover the image transfer belt unit with something such shade cloth to protect its surface from dust or foreign matter.**

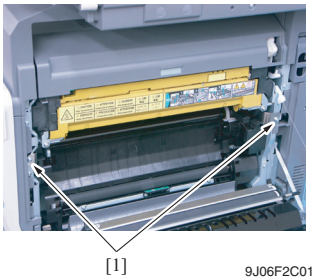

9J06F2C013DA

2. Install the image transfer belt unit with two screws [1].

NOTE

- **Replace the 2nd image transfer roller, the ozone filter and the dust filter/vertical conveyance, which are supplied with the image transfer belt unit, at the same time.**

3. Close the right door.
4. Reinstall the imaging unit and the waste toner bottle.
5. Turn ON the main power switch.
6. Close the front door.
7. Select [Service Mode] → [Imaging Process Adjustment] → [Gradation Adjust] and carry out gradation adjust.

3.6.3 Cleaning of the image transfer entrance guide

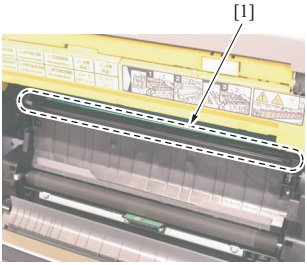

9J06F2C686DA

1. Remove the image transfer belt.
See P.32
2. Wipe the image transfer entrance guide [1] clean of spilled toner and dirt using a soft cloth dampened with water or alcohol.

3.6.4 Cleaning of the IDC/registration sensor F, R

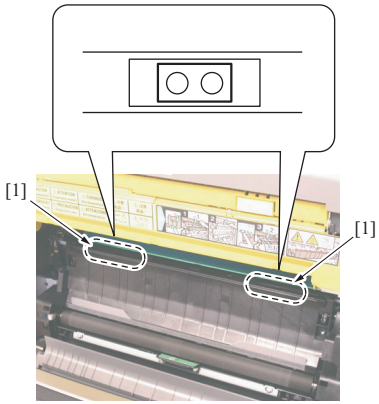

9J06F2C687DA

1. Remove the image transfer belt.
See P.32
2. Wipe the surface of the IDC/registration sensor F, R [1] clean of spilled toner and dirt using a cotton bud.

3.6.5 Replacing the toner cartridge (C, M, Y, K)

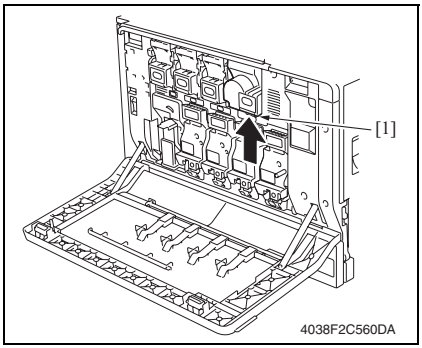

A. Removal procedure

1. Open the front door.
2. Pressing the toner cartridge lock claw [1], pull it toward.

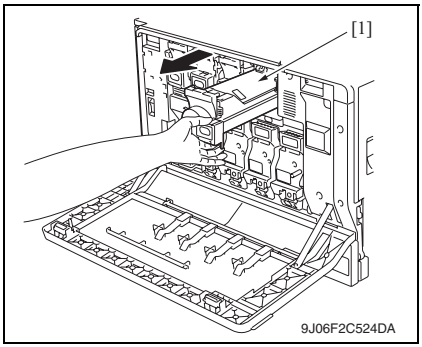

3. Pull the toner cartridge [1] toward to remove it.

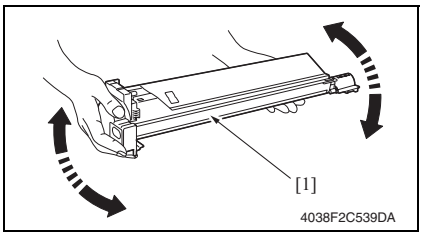

B. Reinstallation procedure

1. Take out the new toner cartridge [1] from the unitary packing box and shake it well up and down 5 to 10 times.

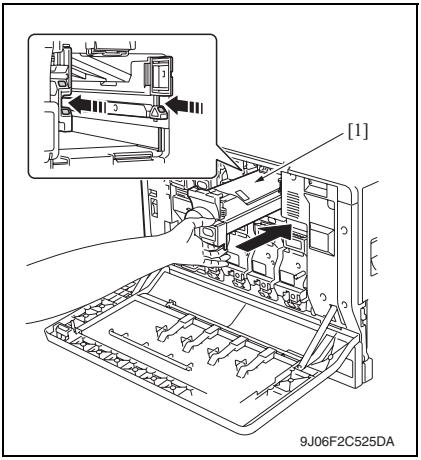

2. Insert the toner cartridge [1] by fitting it to the groove on the main unit.

NOTE

- **Make sure the colors are matched between the toner cartridge and label on the machine.**
- **Make sure the toner cartridge is inserted all the way.**
- **When replacing the toner cartridge (black), replace the deodorant filter supplied with it at the same time.**

3. Clear the comb electrode.

See P.36

3.6.6 Cleaning of the comb electrode

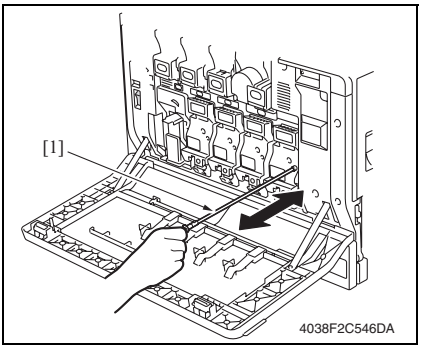

1. Open the front door.
2. Clean the comb electrode by moving the comb electrode cleaning lever [1] in and out several times.

NOTE

- **Move the comb electrode cleaning lever slowly forward and backward until it stops.**

3.6.7 Replacing the imaging unit (C, M, Y, K)

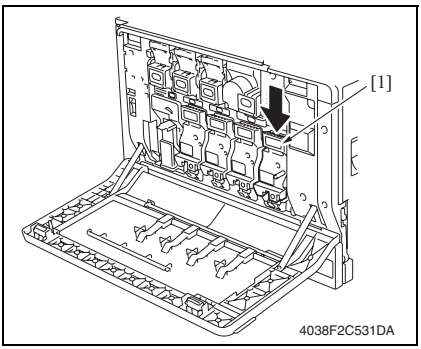

A. Removal procedure

1. Open the front door and turn OFF the main power switch.
2. Unplug the power cord.
3. Press the unlocking knob [1] of imaging unit.

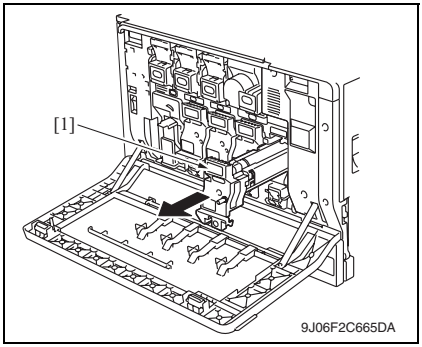

4. Pull out the imaging unit [1], and remove it from main unit.

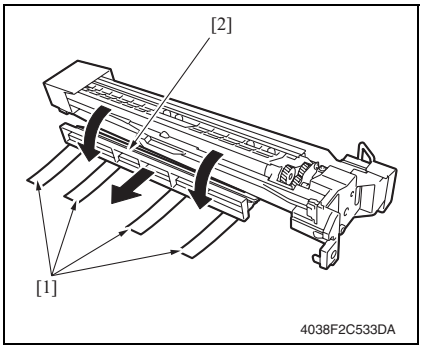

B. Reinstallation procedure

1. Remove the imaging unit from its plastic bag.

2. Peel off the tape [1] so that the mounting bracket [2] can be removed.
Then, remove the mounting bracket [2].

NOTE

- **Since the imaging unit is highly susceptible to light, keep it shielded from light up to the time it is installed.**
- **Carefully unseal the plastic bag (black).**
- **If the imaging unit is packed in the plastic bag (black) again, seal the package using tape or another means.**

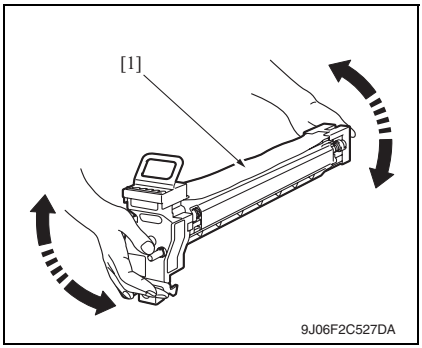

3. Tilt the imaging unit [1] to the left and shake it a small stroke in the tilt direction twice. Then, tilt it to the right and shake it a small stroke in the tilt direction twice.

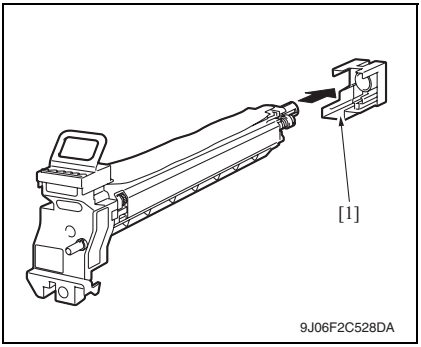

4. Remove the caps [1] on the end of the imaging unit and the bottom packing material.

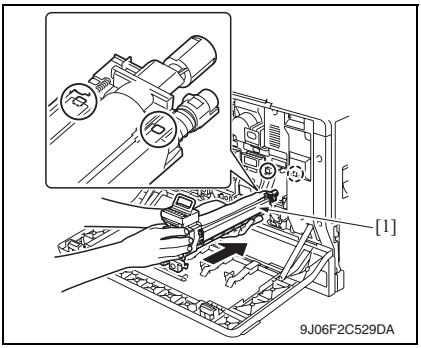

5. Keeping the imaging unit [1] in a level position, insert the imaging unit [1] into the mounting position all the way until it is stopped.

NOTE

- **Install them by fitting the blue label position of imaging unit and one of the machine.**
- **Do not allow the imaging unit to become tilted while installing them into the main unit, as damage to the PC drum can result.**

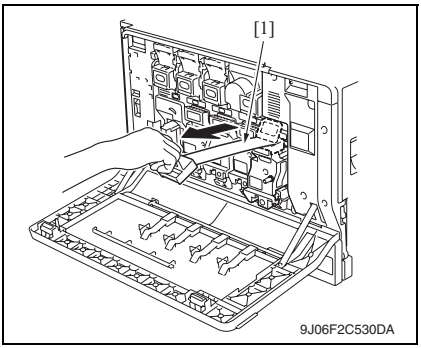

6. Pull out the PC drum protective sheet [1] while pressing the imaging unit.
7. Insert the imaging unit all the way.

NOTE

- **Make sure that the imaging unit is inserted all the way.**

8. Plug in the power cord.
9. Turn ON the main power switch.
10. Close the front door.
11. Select [Service Mode] → [Imaging Process Adjustment] → [Gradation Adjust] and carry out gradation adjust.

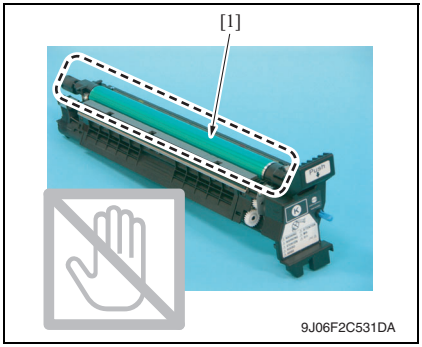

NOTE

- **When removing / installing the imaging unit, use care not to touch the surface of the PC drum [1].**

3.6.8 Replacing the fusing unit

⚠ CAUTION

- **Before replacing the fusing unit, ensure that it has had time to cool down.**

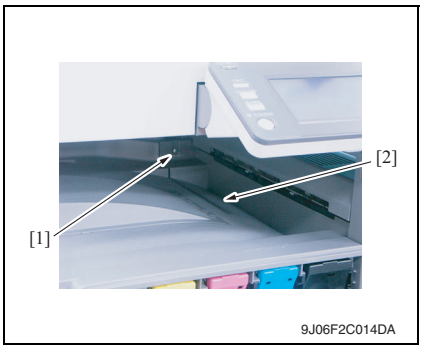

1. Open the front door.
2. Turn OFF the main power switch and unplug the power cord from the power outlet, then wait for about 20 minutes.
3. Remove the screw [1], and remove the exit tray connector protective cover [2].

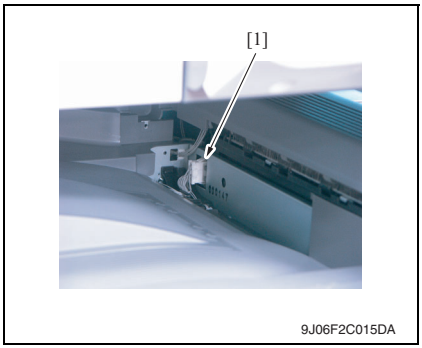

4. Disconnect the connector [1].

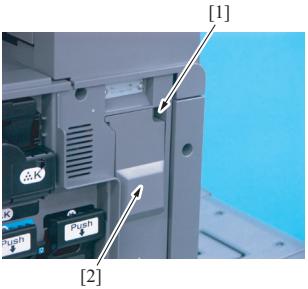

9J06F2C016DA

5. Remove the screw [1], and remove the connector protective cover [2].

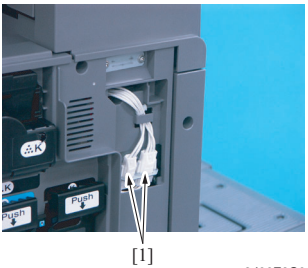

9J06F2C017DA

6. Disconnect two connectors [1].

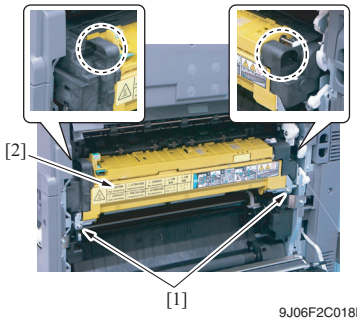

9J06F2C018DA

7. Open the right door.
8. Open the fusing unit cover.
9. Remove two screws [1], and remove the fusing unit [2].

NOTE

- **When removing the fusing unit, hold the parts shown on the picture on the left so that it would not fall.**

4. Service tool

4.1 CE tool list

Tool name	Shape	Personnel	Parts No.	Remarks
Scanner drive cable holding jig	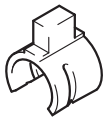 4036fs2001c0	2	4581 7901 ##	
Original glass moving unit height adjustment jig	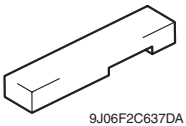 9J06F2C637DA	1	9J06 PJG0 ##	
PH window cleaning jig	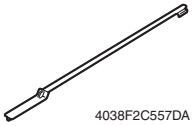 4038F2C557DA	1	4038 2083 ##	
PH window cleaning jig pad	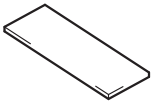 4038F2C558DA	1	4038 2084 ##	
Color chart	4036fs2577c0	1	—	
Compact flash	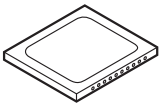 4037F2C601DA	1	4038 R717 ##	
ADF reading chart	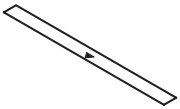 9J07F2C003DA	1	9J06 PJG1 ##	

4.2 Copy materials

4.2.1 Imaging unit single parts (IU)

Parts name	Replacing period
IU black	70,000 copies
IU yellow	45,000 copies
IU magenta	45,000 copies
IU cyan	45,000 copies

See P.16

4.2.2 Toner cartridge single parts (T/C)

Also replace the deodorant filter packed in the T/C black at the same time.

Parts name	Replacing period *1
T/C black	20,000 copies
T/C yellow	12,000 copies
T/C magenta	12,000 copies
T/C cyan	12,000 copies

*1: Life value that can be achieved with a probability of 90% even with product-to-product variations and fluctuating operating environmental conditions taken into consideration, when the T/C is used under the conditions of B/W ratio 5% for each color

4.2.3 Waste toner bottle

- Replace the dust filter/cooling fan supplied with the Waste toner bottle at the same time.

Parts name	Replacing period
Waste toner bottle	25,000 copies *1

*1: A waste toner full condition is detected with detecting the actual waste toner emissions.

See P.16

4.2.4 Maintenance kit

There is no setting for the maintenance kit.

5. Firmware upgrade

5.1 Outline

- There are two ways to update the firmware: One is by directly connecting with the main unit using the compact flash, and the other is by downloading over a network using the Internet ISW.

⚠1 5.2 Preparations for firmware rewriting by Cygwin

5.2.1 Outline

- Write the firmware into the compact flash using Cygwin.
- Cygwin consists of two types: Full install version and light version that is comprised only of necessary files.

5.2.2 Service environment

- OS: Windows 2000/XP
- Drive which enables writing/reading of compact flash
- Compact flash (Service tool: 4038 R717 ##)

5.2.3 Installing the Cygwin

A. For the full installation version

1. Double click the [setup.exe] on CD-ROM in which Cygwin is stored.

4037F2C501DA

2. Click [Next (N)].

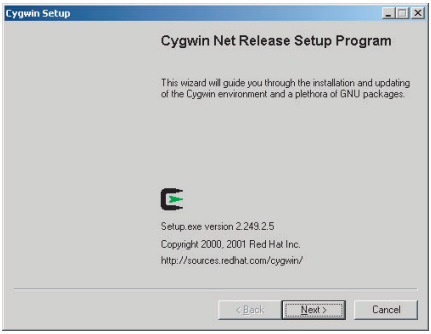

4037F2E545DA

3. Select “Install from Local Directory”, and click [Next (N)].

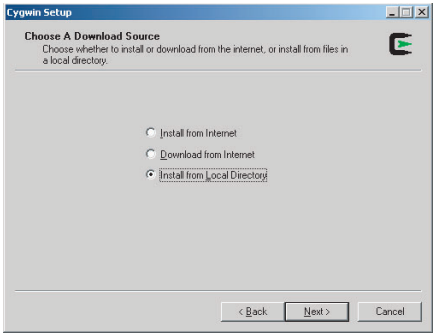

4037F2E546DA

4. Specify the folder for installation.
Check to make sure that “Root Directory” is in default setting, [C:\cygwin].

NOTE

- **Make sure to check that “Root Directory” is in default setting, [C:\cygwin].**
- **Do not change the setting value except “Root Directory.”**

5. Click [Next (N)].

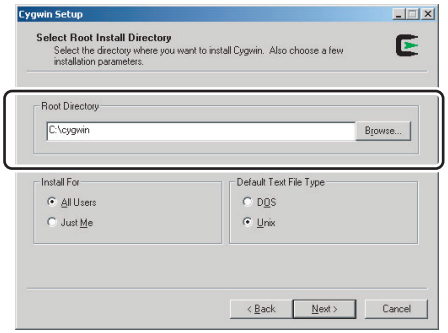

4037F2E547DA

6. Specify the place of the data to be installed.
   For installing from CD-ROM, select the [cygwin] folder in CD-ROM drive.
   (Described below is the sample procedure when CD-ROM drive is E-drive.)
7. Click [Next (N)].

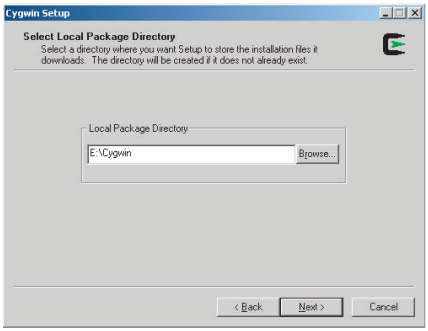

4037F2E548DA

8. Click [Next (N)].

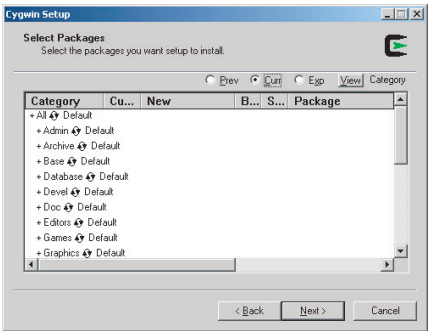

4037F2E549DA

9. Click [Complete] to start installing.

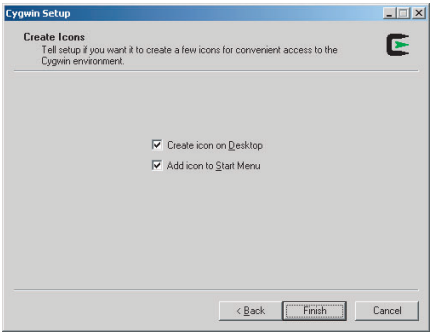

4037F2E550DA

B. For the light version

1. Decompress the downloaded compressed file “cygwin_rhein_phase2.zip” directly to the C drive (Windows system drive).
2. Confirm that the “Cygwin” folder is created directly in the C drive (Windows system drive).

5.2.4 Settings of the Windows Environmental Variable

1. After installing, open the property of “My Computer”, and click the “Environmental Variable” of “Advanced” tab.
2. Click the “New” in System Variable Setting.

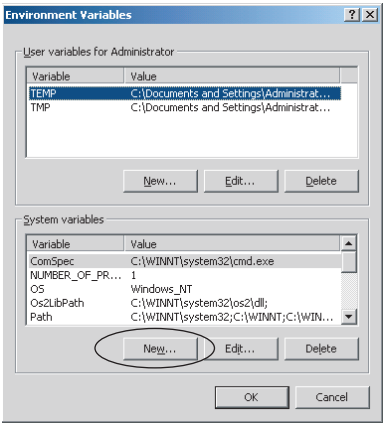

4036fs2620e0

3. Set the following two values as the Windows environmental variable.

Variable name	Variable value
CYGWIN	ntsec
HOME	/home/username

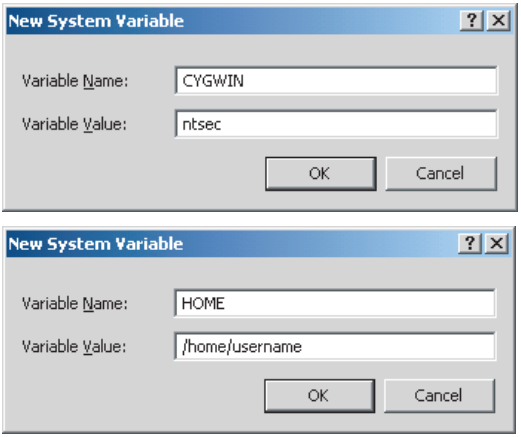

4036fs2621e0

5.2.5 Writing into the compact flash

1. Put the data of firmware in the optional directory. (C:\bizhub in the below figure)

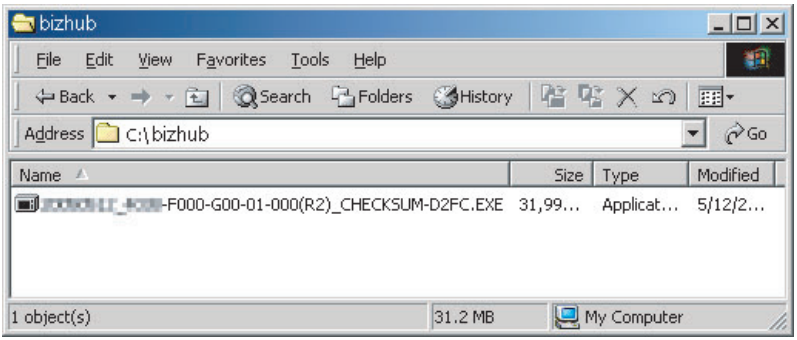

4038F2E562DB

NOTE

- **The file name of firmware data consists of the "Release Date_Version_CHECKSUM-****.exe."**

2. Double-click the firmware data, and specify the directory to be uncompressed, and then uncompress it.

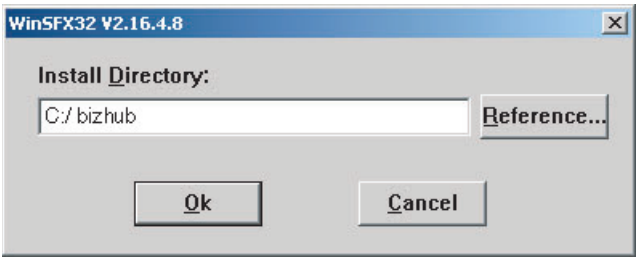

4038F2E563DB

NOTE

- **When old firmware is still left in the specified directory to be uncompressed, delete it before uncompressing.**
- **When the firmware data is decompressed, "card_work" folder is created in the selected directory and the data is decompressed in this folder.**

3. Mount the compact flash on the PC, and check the drive name, which was recognized in the Windows. (F-drive in the following figure)

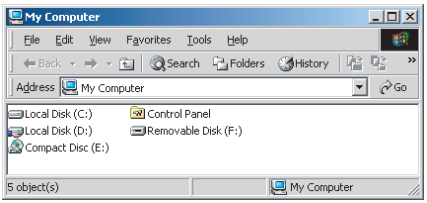

4038fs2623e0

4. Click [Start] → [Program] → [Accessories] → [Command Prompt] to open the command prompt.
5. Use the command prompt to move into the uncompressed directory.
6. Specify the drive of compact flash, which was recognized through the procedure 3, and execute the “mksf.bat.” (Input the C: \bizhub\card_work>mkcf f (drive number): in the below figure, and push the “Enter”.)

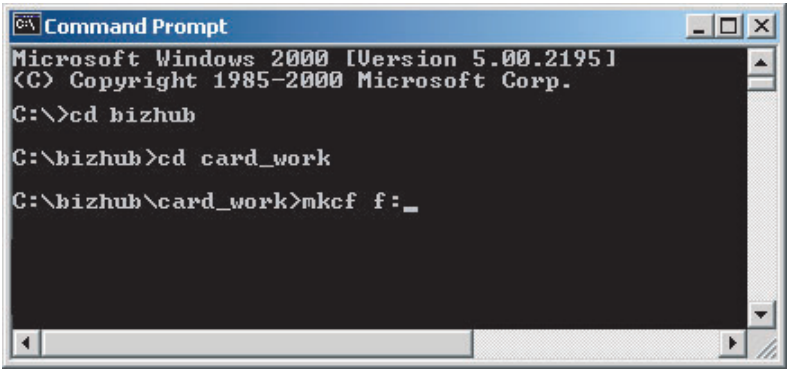

4038F2E564DB

7. Once the “mkcf.bat” is executed, data writing into the compact flash is started.
8. Upon completion of writing, CHECKSUM is executed. If CHECKSUM value is precisely matched, “VERIFY OK” appears.

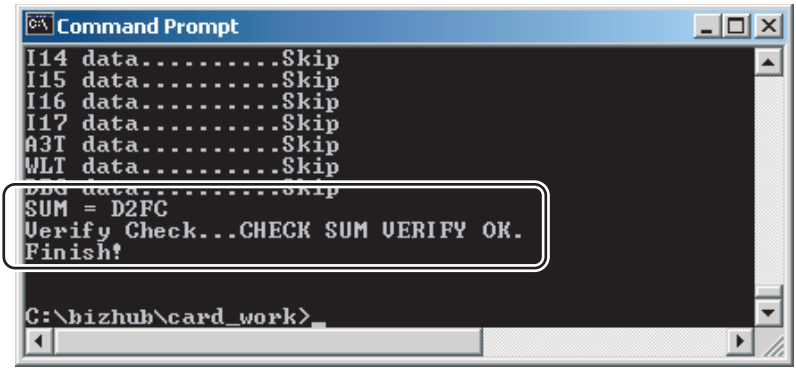

4038F2E565DB

9. Remove the compact flash from PC.

NOTE

- **When removing the compact flash, be sure to check if data is written as normal and then remove it according to the precise removing method.**

5.3 Preparations for firmware rewriting by Firmware Imaging Toolkit 2006

- This software is designed as the tool to write firmware data of MFP/printer released by KMBT into the compact flash card.

5.3.1 Correspond model

- Correspond models of the software is as follows.

Color machine	• bizhub C250/C300/C350/C351/C352/C450 • bizhub C250P/C352P/C450P
B/W machine	• bizhub 200/250/350 • Di2510/3010/3510/2510f/3010f/3510f

5.3.2 Function outline

- The following functions are available with this software.

Function type	Function name	Description
Basic functions	Write Firmware to a card	• Write firmware data into the compact flash card. See P.56
	Compare Firmware with a card	• Compare the firmware data written into the compact flash card with the one saved in PC. See P.56
Advanced functions	Create a Firmware Image from a card	• Create the firmware image form using the firmware data written into the compact flash card. See P.57
	Format a card	• Format the compact flash card by the FAT or vxWorks form. **NOTE** • **vxWorks form is not applicable** See P.57
	Display information about a card	• Acquisition the information of firmware data written into the compact flash card. See P.57

5.3.3 System environment

- The following system environments are required or recommended to use the software.

Computer	• IBM PC/AT compatible machine
CPU	• Pentium III / 500 MHz or higher is recommended.
Correspond OS	• Windows 2000, Windows XP or Windows Server 2003
Required memory	• More than 128 MB (Windows 2000), 256MB (Windows XP/2003) is recommended.
Others	• Drive that is able to Read/Write compact flash

5.3.4 Installation of software

- Follow the procedures shown below to install the software.

NOTE

- **Install the software to the PC with the administration authentication.**
- **When any anti-virus program is activated, quite the program before the installation.**

1. Double click [setup.exe] to start the installation of the software.

9J06F2C673DA

2. Click [Next >].

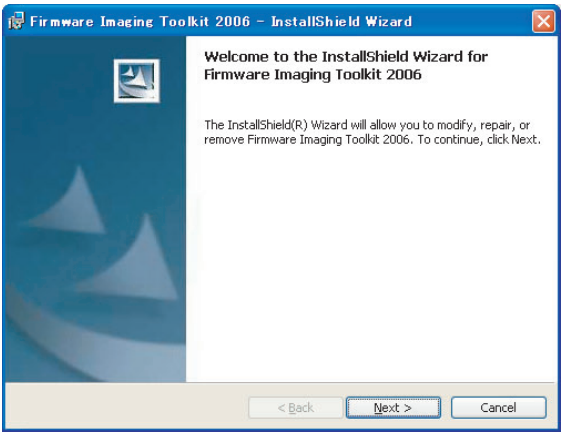

9J06F2E700DA

3. After checking the contents of license agreement, select [I accept the terms in the license agreement] and click [Next >].

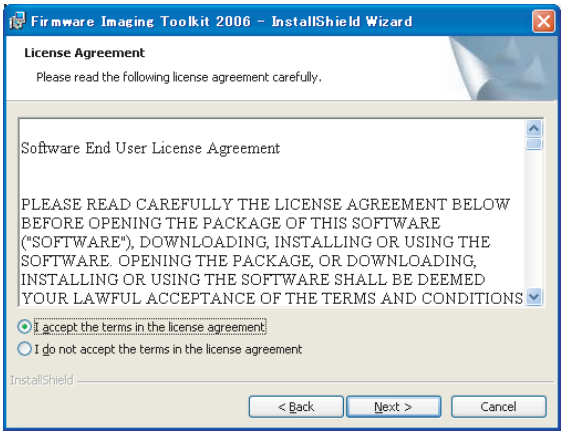

9J06F2E701DA

4. Select the installed destination folder of Firmware Imaging Toolkit 2006, and click [Next>].

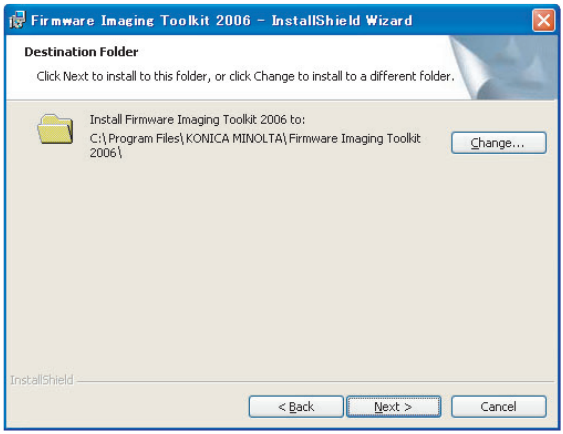

9J06F2E702DA

5. Click [Install] to start installation.
6. Click [Finish] to complete the installation.

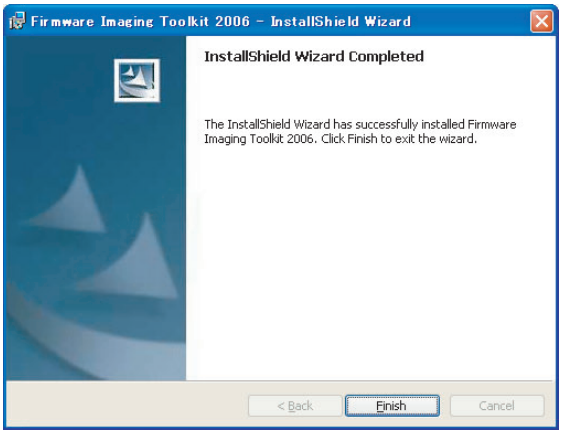

9J06F2E703DA

7. Shortcut file will be created inside Windows Start menu ([Program] → [KONICA MINOLTA] → [Firmware Imaging Toolkit 2006]).

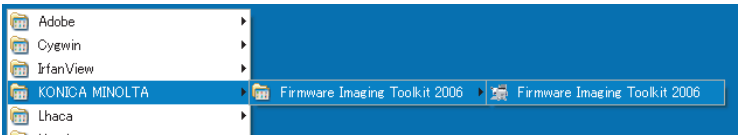

9J06F2E708DA

5.3.5 Update of software

- To update the software version, delete (uninstall) the currently installed program and install the new version.
- Follow the procedures shown below to delete (uninstall) the program.

1. Quite the program if the software is activated.
2. Select [Firmware Imaging Toolkit 2006] of [Add/Remove Programs] in Windows Control Panel menu to delete the program.

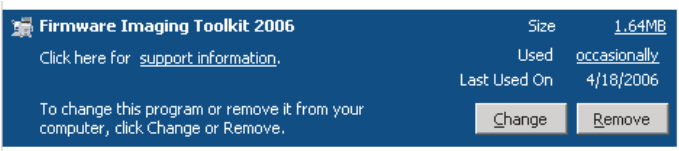

9J06F2E709DA

5.3.6 Screen

A. Main window

- The main window will be displayed after activating the software.
- Main window consists of 2 patterns: Basic mode, Advanced mode

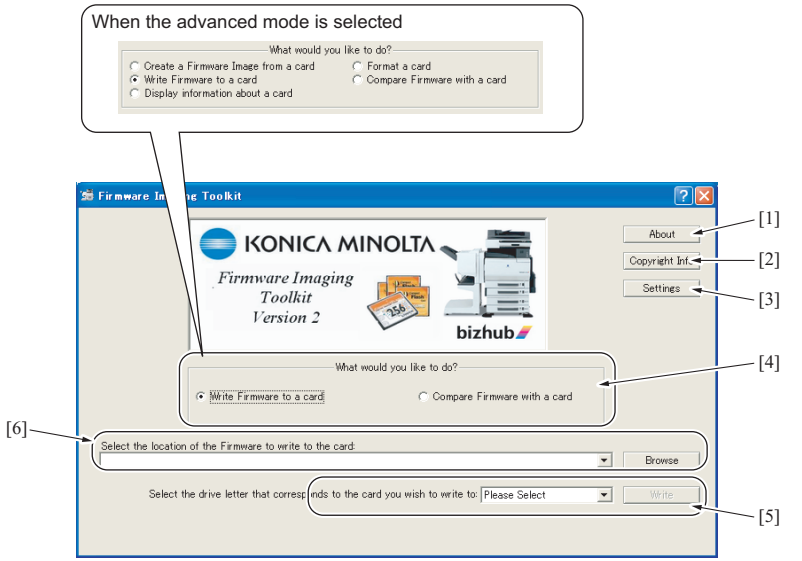

9J06F2E704DA

[1]	About	• To display the outline of the tool.
[2]	Copyright Info	• To display the license agreement and version information of the tool.
[3]	Settings	• To display the dialog to enable the advanced functions. • Select the check box of [Enabled Advanced Features] to enable advanced functions at main window. See P.55
[4]	What would you like to do?	• To select the function to be used. • Displayed screen is different between Basic mode and Advanced mode. See P.56
[5]	Select the location of the Firmware to write to the card:	• To select the compact flash drive to which the data to write.
[6]	Select the drive letter that corresponds to the card you wish to write to:	• To select the location where the firmware is stored in PC.

B. Settings dialog

- It will be displayed by clicking [Settings] at main window.
- Other settings will be enabled by selecting the check box of [Enabled Advanced Features].

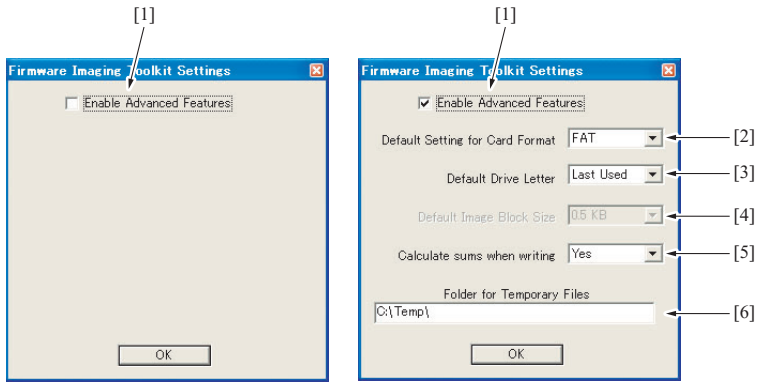

9J06F2E705DA

[1]	Enable Advanced Features	• Enable the setting of advanced functions at the dialog by selecting the check box. Also advanced functions can be selected at the main window.
[2]	Default Setting for Card Format	• Select the default card format during software starting. FAT : The format to be used by all models that the software supports. vxWorks : Not available yet.
[3]	Default Drive Letter	• Select how to set default of compact flash drive during software starting. LastUsed : The drive used at previous time is selected. None : [Please Select] is displayed on the screen every starting and the drive should be selected every time.
[4]	Default Image Block Size	• Not available yet.
[5]	Calculate sums when writing	• Set whether to calculate check sums during data writing. • If [YES] is selected, data consistency can be ensured by data verification of check sums during data writing. However, it takes more time for data writing compared to the case without sums calculation (Basically this mode shall be selected.) • If [No] is selected, check sums calculation is skipped during data writing. Although it take less time for data writing compared to the case with sums calculation, it fails to ensure the reliability of the written data.
[6]	Folder for Temporary Files	• Set the folder for saving temporary files during the tool is activating. The temporary file is automatically deleted after the operation completes normally.

5.3.7 Details of each function

A. Basic functions

(1) Write Firmware to a card

- To write FW data into the compact flash. The FW data of the models shown below can be written.
- To write FW data into the compact flash. The FW data of the models shown below can be written.

<Corresponding models and firmware file type>

File type / Models	Indexed firmware type	Compressed firmware type	Uncompressed firmware type	Di3510/350/250/200 firmware type
C450/C450P/C351	rhein1_cf.tar.gz	*.img.gz	*.img	—
C352/C352P/C300	rhein2_cf.tar.gz			—
C350	tss2_cf.tar.gz			—
C250/C250P	rhein3_cf.tar.gz			—
Di2510/3010/3510/2510f/3010f/3510f	—	—	—	ma001
200/250/350	—	—	—	ma001a

NOTE

- **The above-mentioned [Indexed firmware type] and [Di3510/350/250/200 firmware type] shall be comprised of multiple files and one of the files shall be named as above.**
- **[Compressed firmware type] means the compressed formed image file that is created using the tool's function of the [Create a Firmware Image from a card].**
- **[Uncompressed firmware type] means the image file that is uncompressed the compressed firmware file.**
- **To write the image file data (*.img.gz or *.img) into the compact flash, use the compact flash with the same capacity as the one used for the original image file. Although the compact flash with larger capacity than the original one can be used, it is not covered under warranty.**
- **C350 firmware requires the compact flash over 64 MB.**
- **Firmware of C450/C450P/C351/C352/C352P/C300/C250/C250P requires the compact flash over 128 MB.**

(2) Compare Firmware with a card

- Compare the firmware data written into the compact flash and the one (file) saved in PC.
- After the comparison, display the check sum information (comparison result dialog) of the firmware data of the compact flush and the file.
- The firmware data (file) format saved in PC shall consistent with the one written into the compact flash.

B. Advanced functions

(1) Create a Firmware Image from a card

- Create the image file from the firmware data written into the compact flash.
  Create the image file by dumping directly the data in the card. This function allows us to save the various type of firmware data in the compact flash as the image file and hold as copy data.
- The created FW image file is automatically compressed and created as the Compressed firmware file (*.img.gz).
  The image file is written into the compact flash in the uncompressed form, however, the uncompressed data would occupy too much capacity, which makes file control difficult. Therefore this tool doesn't create uncompressed firmware file (*.img).

(2) Format a card

- Make format of the compact flash in FAT or vxWork form.
- To write the firmware data into the compact flash, the card should be formatted in FAT form to clear (initialize) the description of the compact flash.

NOTE

- **In current version, only FAT format is available but not vxWork format.**
- **After the firmware data is written into the compact flash, it becomes the own file style that is different from the FAT, and the compact flash that the firmware data is written cannot be browsed on the Windows OS.**

(3) Display information about a card

- Display the information of the firmware data written into the compact flash.
  The information to be displayed is according to the type of written FW data.
- For the series of Di3510/200/250/350 series, MSC version is displayed.
- For the series of C450/C450P/C351/C352/C352P/C300/C250/C250P, check sums of each firmware data is displayed.

5.3.8 How to write firmware data

A. In the case of C450/C450P/C351/C352/C352P/C300/C250/C250P series

1. Put the firmware data in the optional directory. (C:\bizhub in the below figure)

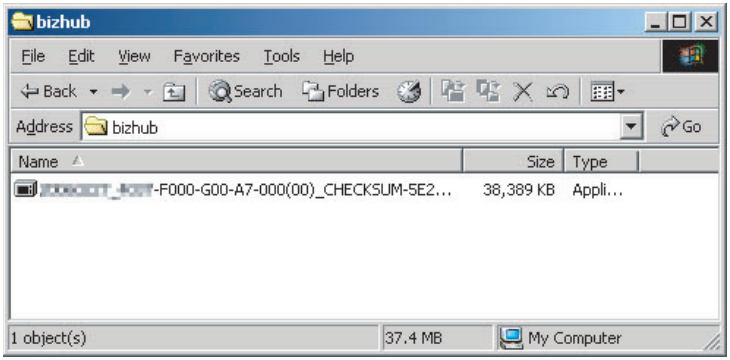

9J06F2E710DA

NOTE

- **The file name of firmware data consists of the "Release Date_Version_CHECKSUM-****.exe."**

2. Double-click the firmware data, and specify the directory to be uncompressed, and then uncompress it.

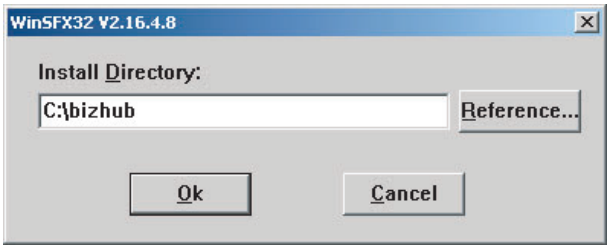

9J06F2E711DA

NOTE

- **When old firmware is still left in the specified directory to be uncompressed, delete it before uncompressing.**

3. Mount the compact flash on the PC, and check the drive name, which was recognized in the Windows. (F-drive in the following figure)

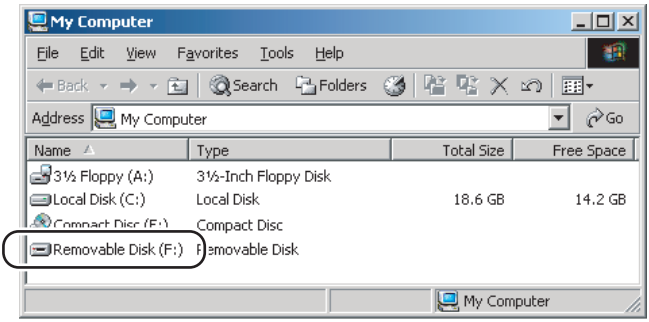

9J06F2E712DA

4. Start Firmware Imaging Toolkit 2006.

NOTE

- **When using the external compact flash drive such as USB be sure to connect them before starting this tool.**

5. Select the check box of [Write Firmware to a card].

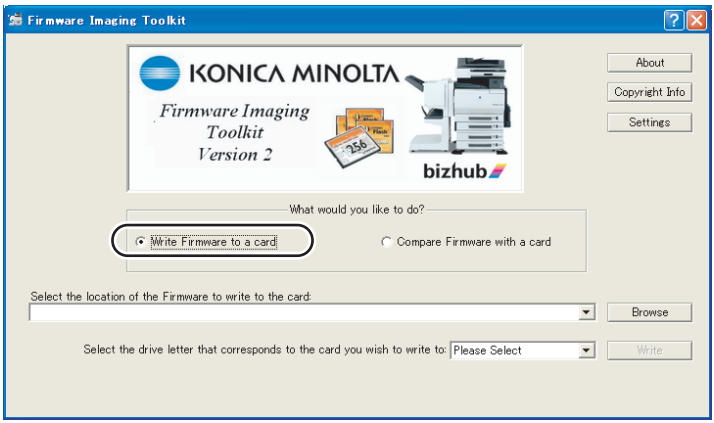

9J06F2E706DA

6. Click [Browse].

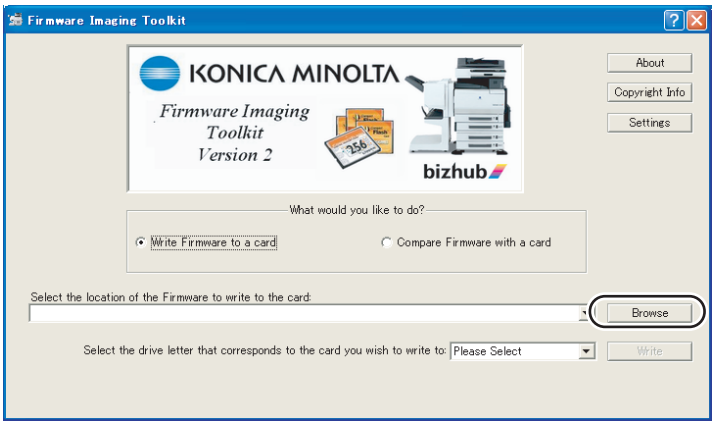

9J06F2E707DA

7. Select the file type [C450/ C351/C352/ C300/C350/C250 Indexed Firmware].

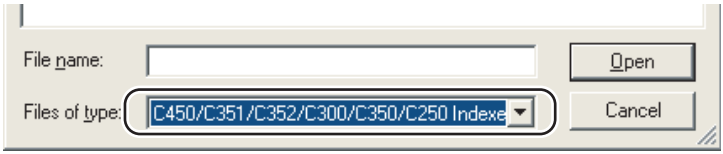

9J06F2E713DA

8. Move to the folder decompressed at step 2, confirm that only "###_cf.tar.gz" (### is for model name) is displayed, and select.

NOTE

- **If the file extension is set to be not displayed in Windows, the file name ".gz" will not be displayed.**

9. Click [Open].

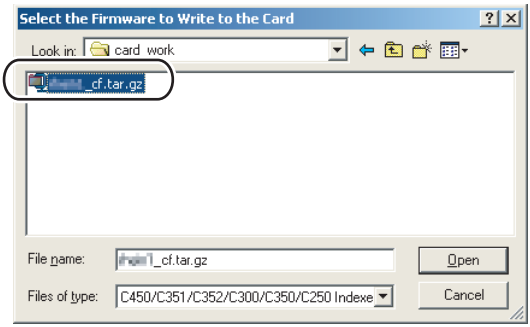

9J06F2E714DA

10. Select the drive that the compact flash is inserted, which is confirmed at step 3.

NOTE

- **The drives other than the compact flash that is recognized as "Removable Disk" can be selected for the writing destination. If these drives are selected mistakenly to make the writing, it may give fatal damage on Windows system or delete the saved data. Therefore pay close attention when selecting the drive.**

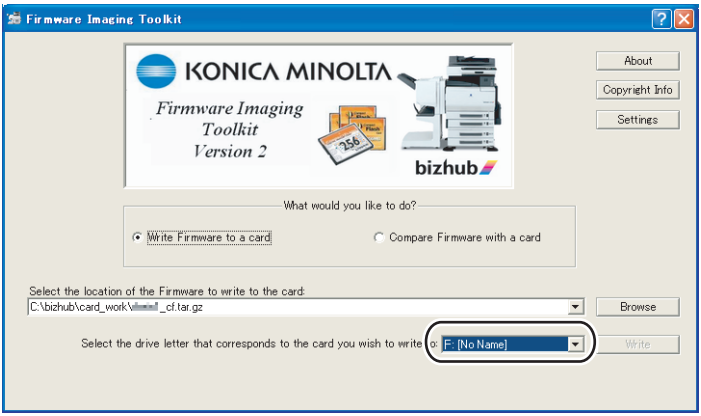

9J06F2E715DA

11. [Write] button is changed form gray into active status.
When clicking [Write] button, the following dialog is displayed.

12. In the dialog, re-confirm the firmware data and the written destination drive, and click [YES].
(If [NO] is clicked, the screen goes back of the main window.)

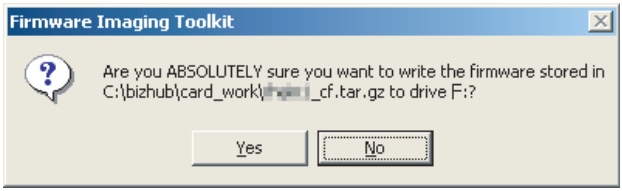

9J06F2E716DA

13. Click [Yes], and data writing starts.

NOTE

- **Writing a card is a resource intensive operation for your computer - do not attempt to multitask (use the computer for anything else) during the writing procedure.**

14. When the writing is completed, the following screen appears.
In this screen, check sums will be compared between the firmware data and one written into the compact flash.

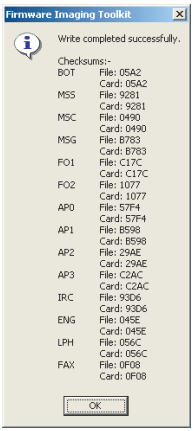

9J06F2E717DA

NOTE

- **The contents displayed on the screen may different according to the model type. The above is the screen displayed for firmware data writing of bizhub C450.**

15. Confirm each check sums are identical and quit Firmware Imaging Toolkit 2006.
16. Take out the compact flash from the PC.

NOTE

- **When removing the compact flash, be sure to check if data is written as normal and then remove it according to the precise removing method.**

5.4 Firmware rewriting by compact flash

- The firmware is updated using the compact flash.

5.4.1 Updating method

NOTE

- **NEVER remove or insert the compact flash card with the machine power turned ON.**

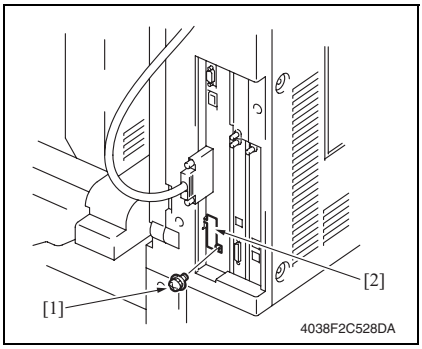

1. Open the front door, and turn OFF the main power switch.
2. Remove the screw [1] and the metal blanking plate [2].

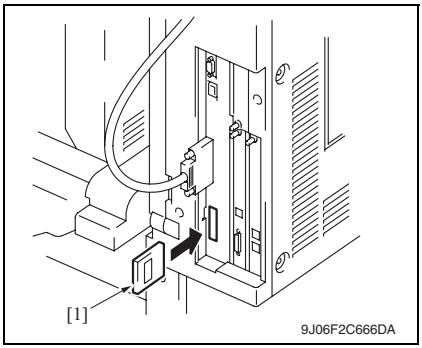

3. Insert the compact flash card [1] into the slot.

4. Turn ON the main power switch and the sub power switch.
5. Control panel shows up to seven types of F/W to be updated.
6. Select the particular type of F/W to be updated. (Select [YES].)

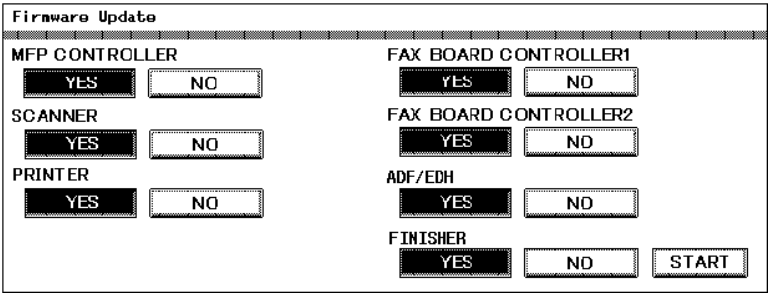

9J06F2C643DA

F/W to be updated	Appropriate board
MFP CONTROLLER	Printer control board (PRCB)
SCANNER	Image processing board (IPB)
PRINTER	Mechanical control board (MFPB)
FAX BOARD CONTROLLER1	Fax board (Main) *1
FAX BOARD CONTROLLER2	Fax board (Sub) *2
ADF/EDH	DF control board (DFCB) *3
FINISHER	FS control board (FSCB) *4

*1: The optional fax kit is necessary for the above procedure.
*2: The optional fax multi line ML-501 is necessary for the above procedure.
*3: The optional automatic document feeder DF-608 is necessary for the above procedure.
*4: The optional finisher FS-514 is necessary for the above procedure.

7. Press the [START]. (At this time, the Start key starts blinking red.)
8. Check that the control panel shows the message indicating that the data has been rewritten correctly ([Downloading Completed]). Check also the check sum value ([Check Sum ####]) shown on the control panel. (The Start key blinks green.)
9. Turn OFF the main power switch.
10. Remove the compact flash card from the slot.
11. Turn ON the main power switch, and close the front door.

NOTE

- **When turning the main power switch ON for the first time after the firmware is updated, data may sometimes be internally updated.**
  In that case, the following message will be displayed. Never turn the main power switch OFF until either the serial number input screen or the trouble code screen is displayed.

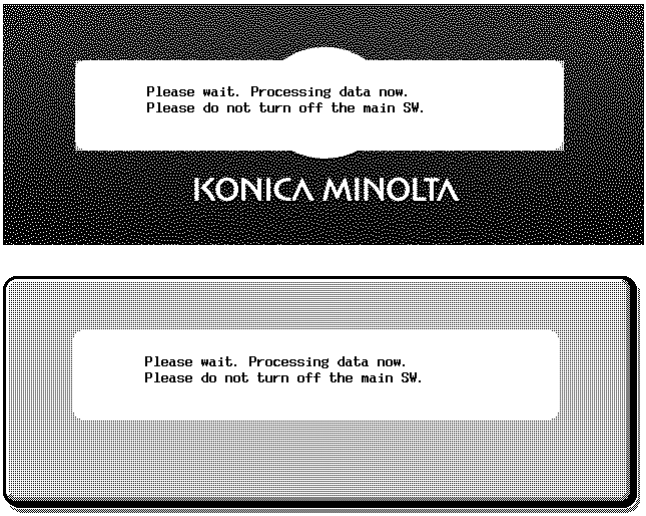

4037F2E627DA

12. Call the Service Mode to the screen.
13. Select [Firmware Version].
14. Make sure if the version of firmware is updated.

5.4.2 Action when data transfer fails

- If “NG” appears on the control panel, indicating that rewriting has been unsuccessful (in which case the Start key lights up red), take the following steps.

1. Perform the data rewriting procedure again.
2. If the procedure is abnormally terminated, change the compact flash for a new one and try another rewriting sequence.
3. If the procedure is still abnormally terminated, change the board that has caused “NG” and carry out data rewriting procedure.

MFP CONTROLLER	Printer control board (PRCB)
SCANNER	Image processing board (IPB)
PRINTER	Mechanical control board (MFPB)
FAX BOARD CONTROLLER1	Fax board (Main) *1
FAX BOARD CONTROLLER2	Fax board (Sub) *2
ADF/EDH	DF control board (DFCB) *3
FINISHER	FS control board (FSCB) *4

*1: The optional fax kit is necessary for the above procedure.
*2: The optional fax multi line ML-501 is necessary for the above procedure.
*3: The optional automatic document feeder DF-608 is necessary for the above procedure.
*4: The optional finisher FS-514 is necessary for the above procedure.

5.5 Updating the firmware with the Internet ISW

5.5.1 Outline

- [Internet ISW] is the system which gives the instruction for updating the firmware with the control panel of the main unit, so the main unit will automatically receive the firmware from the program server over a network for updating. With the Internet ISW, the firmware can be updated when the CE is at the user's without firmware data.

5.5.2 Service environment

The following conditions are necessary for using the Internet ISW function.
- The main unit is connected to such a network environment that the firmware can be downloaded on the internet using the ftp or http protocol.

The "Internet ISW" will not operate under the following conditions.
- Main power switch is set to OFF.
- Sub power switch is set to OFF.
- When the following setting is set to "ON":
  [Administrator Setting] → [Security Setting] → [Enhanced Security Mode]
- The Main unit has the job currently performing.

5.5.3 Preparations for firmware rewriting

- For using the Internet ISW, the network parameter, program server address as well as firewall address need to be set to the main unit.
- For details of each setting item, refer to Adjustment/Setting "Internet ISW".

See P.381

A. Internet ISW Set

1. Call the Service Mode to the screen.
2. Touch [Internet ISW Set] which is available from [Internet ISW].

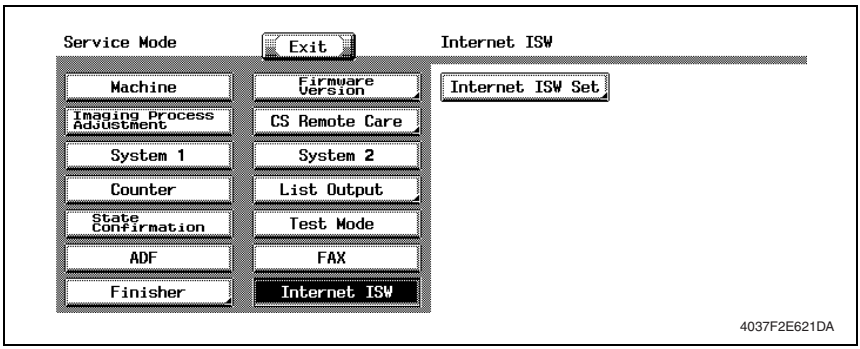

3. Touch [ON], and touch [END].

NOTE
- **Settings such as server setting, etc. will be available by selecting "ON" on this setting.**
- **When the following setting is set to "ON", "ON" cannot be selected on this setting. [Administrator Setting] → [Security Setting] → [Enhanced Security Mode]**

B. Protocol setting

- **It performs the setting concerning the protocol (ftp or http) for connecting to the Internet ISW.**
- **When connecting to the program server using a proxy server, perform the setting for a proxy server.**

Step	Connecting by http	Connecting by ftp
0	Select [Internet ISW] which is available from [Service Mode].	
1	Data Input Setting • Touch [HTTP Setting], and select [ON].	Data Input Setting • Touch [FTP Setting], and select [ON].
2	Connect Proxy • For connecting via proxy server, select [ON].	
3	Proxy Server • For connecting via proxy server, set the proxy server address and the port number. *1.* Select the [Server Address], and set the proxy server address by IP addressing scheme or FQDN scheme. *2.* Select [Port Number], and set the port number for the proxy server from 1 through 65535.	
4	Proxy Authentication • Set the login name and the password which may be necessary for authentication when accessing to the proxy server. *1.* When Authentication is necessary for accessing to the proxy server, select [Authentication], and select [ON]. *2.* Select [Log-in Name], and enter the login name on the on-screen keyboard. *3.* Select [Password], and enter the password on the on-screen keyboard.	Connection Setting • Perform the setting for accessing FTP server. *1.* Select [Port Number], and set the port number for FTP server from 1 through 65535. *2.* Select [Connection Time Out], and set the time for the connection time out from 1 through 60. *3.* When connecting in PASV mode, select [PASV Mode], and select [ON]. *PASV Mode: This mode is for transferring the file with FTP under the condition where communication is restricted such as inside the firewall. Since with PASV mode, the client with restriction sets the port number, data transmission port can be secured to enable the file transmission.
5	Connection Time-Out • Select [Connection Time-Out], and set the time for the connection time out between 30 and 300 seconds.	—

C. Forwarding access setting

- To make the access setting for the program server which stores the firmware data.

1. Select [Internet ISW] which is available from [Service Mode].
2. Touch [Forwarding Access Setting].

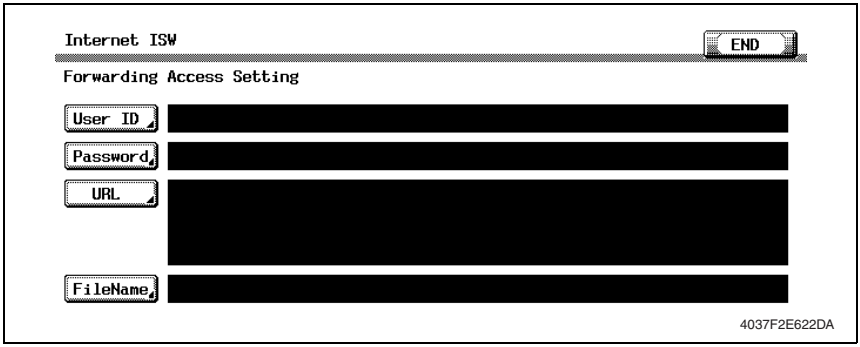

3. Select [User ID], and enter the user ID which is necessary for connecting to the program server on the on-screen keyboard, and touch [END].
4. Select [Password], and enter the password which is necessary for connecting to the program server on the on-screen keyboard, and touch [END].
5. Select [URL], and enter the directory which stores the program server address and the firmware on the on-screen keyboard by URL method, and touch [END].

NOTE

- **Enter the URL which matches to the protocol to be used.**

When connecting to http	**http://(host name or IP address)/directory name**
or	**https://(host name or IP address)/directory name**
When connecting to ftp	**ftp://(host name or IP address)/directory name**

6. Select [File Name], and enter the file name of the firmware data to be downloaded on the on-screen keyboard, and touch [END].
7. Touch [END] to finish setting.

5.5.4 Firmware rewriting

NOTE

- **When performing the Internet ISW, ask the administrator for permission beforehand.**
- **DO NOT turn OFF the main/sub power switch while downloading.**

A. Conducting rewriting on the control panel.

1. Perform the following setting.
[Service Mode] → [Internet ISW] → [Download]

2. Touch [ISW Start].

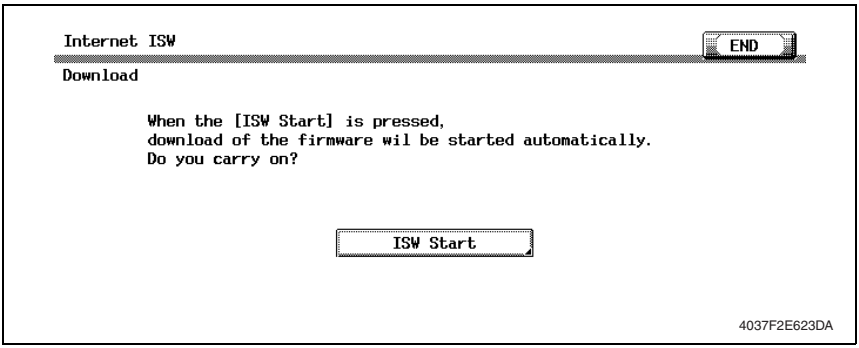

3. The main unit will automatically start running, and it starts accessing the server.

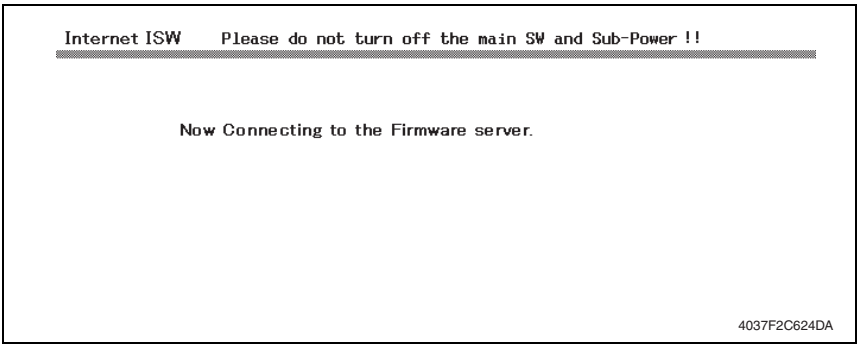

4. Select the F/W to be updated, and start downloading.

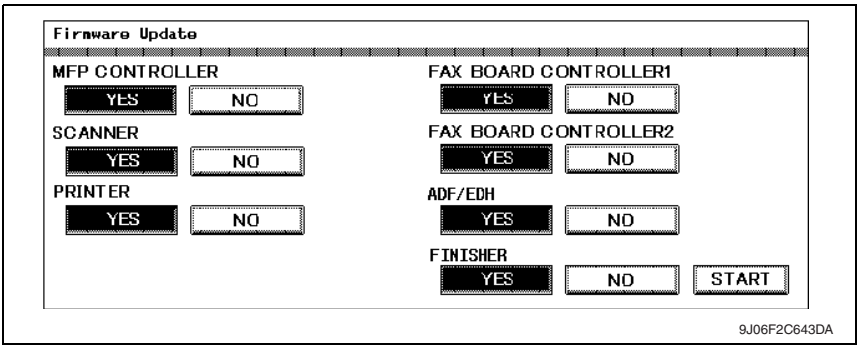

B. During firmware updating

1. The message to indicate the status will be displayed on the screen while connecting or transferring data.

C. Completed or failed

(1) Firmware updated normally

1. When the Firmware is normally updated, restart the main unit in auto or manual mode to display the outcome, and touch [OK] to return to the main screen.

NOTE

- **When turning the main power switch ON for the first time after the firmware is updated, data may sometimes be internally updated.**
  In that case, the following message will be displayed. Never turn the main power switch OFF until either the serial number input screen or the trouble code screen is displayed.

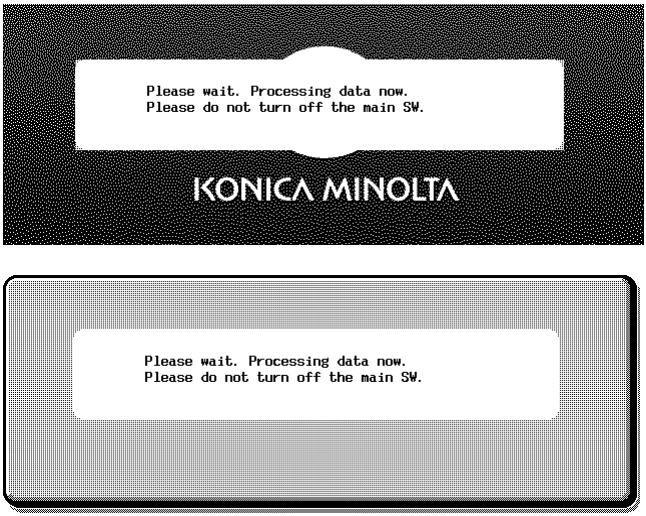

4037F2E627DA

(2) Failing to update the firmware due to the network trouble

1. When updating failed to complete due to the trouble on connecting to the network, an error code and the message will be displayed.
2. Restart the main unit in auto or manual mode, and touch [OK]. It can be used with the firmware version before conducting updating.
3. Check the settings for the network by error codes, and try updating again.

NOTE

- **For error codes, refer to “Error code list for the Internet ISW”.**

See P.73

(3) Failing to update the firmware after downloading has started

1. Once firmware updating has started, the ROM in the main unit will be deleted.
   When it failed right after updating has started, restart the main unit, and shift to the standby screen to retry downloading.
2. When updating on the control panel, touch [settings] on the standby screen, and check the Network settings again.
   Touch [Download], and restart the Internet ISW.

NOTE

- **Return to the standby screen without fail after turning the main power switch OFF/ON if the firmware is not updated.**
- **Firmware can be updated with the Compact flash with the main power switch OFF.**

D. Confirming the firmware version

1. Call the Service Mode to the screen.
2. Select the [Firmware Version].
3. Check if the firmware version is updated.

5.5.5 Error code list for the Internet ISW

- When a trouble occurred while conducting the Internet ISW and it was not normally connected, the message on the status and the error code will be displayed on the control panel.
  When updating with CS Remote Care, the error code will be sent to the CS Remote Care center.

<Sample display>

```
Internet ISW

Failed to connect to the Firmware server.
Turn main switch OFF and ON.
Please do not turn  Sub-Power Off !

Code: 0x00003200
```

4037F2C619DA

Error code Control panel	Description	Countermeasure
0x00000001	Illegal error on the control	• Check if the following setting is set to “Valid”. [Service Mode] → [Internet ISW] → [Internet ISW setting] • Check the status of the following setting. [Service Mode] → [Internet ISW] → [Transfer access setting] • If the above process does not solve the problem, inform the corresponding error code to the KONICA MINOLTA.
0x00000010	Parameter error	• Check if the following setting is set to “Valid”. [Service Mode] → [Internet ISW] → [Internet ISW setting] • If the above process does not solve the problem, inform the corresponding error code to KONICA MINOLTA.
0x00111000	Error concerning the network • Connection has been completed.	• Check the User’s network environment. (LAN cable’s connection) • Check the status of the following setting. [Service Mode] → [Internet ISW] → [Transfer access setting] • Check to see if the FTP server operates normally.

Error code Control panel	Description	Countermeasure
0x00111001	Error concerning the network • It cannot be connected to the server.	• Check the network environment of the User. • Check to see if the FTP server operates normally.
0x00111100	Error concerning the network • Communication timeout.	
0x00111101	Error concerning the network • Disconnection occurred	• Check the network environment of the User. • Check to see if the FTP server operates normally.
0x00111110	Error concerning the network • The network is not connected.	
0x00110010	Error concerning the network • Others	
0x00001###	FTP error • Reply code when it failed to be connected	• Check to see if FTP server normally operates. • Check the IP address, user's name, etc.
0x00002###	FTP error • Error reply code for the user command or pass command	• Check to see if FTP server operates normally.
0x00003###	FTP error • Error reply code for CWD command	
0x00004###	FTP error • Error reply code for the TYPE command.	• Check to see if FTP server operates normally.
0x00005###	FTP error • Error reply code for the PORT command.	
0x00006###	FTP error • Error reply code for the PASV command.	• Check to see if FTP server operates normally. • Set the PASV mode to "Invalid", and try it again.
0x00007###	FTP error • Error rely code for the RETR command.	• Check to see if FTP server operates normally. • Wait for about 30 minutes and try it again.
0x1000 0100	• It cannot be accepted because of the job currently being executed. • ISW being executed by other method.	• Wait for the current job to be completed and try it again.
0x10000101	• It cannot be accepted because the sub power switch is OFF.	• Turn sub power switch ON and try it again.
0x10000102	• The Internet ISW is already being executed.	• Wait for the current Internet ISW to be completed.
0x10000103	• It failed to prohibit the job. (It failed to lock the operation.) → It failed to lock the job because the operation is already locked with PSWC, etc.	• Check if the following setting is set to "Valid". [Service Mode] → [Internet ISW] → [Internet ISW setting] • If the above process does not solve the problem, inform the corresponding error code to the KONICA MINOLTA.
0x10000104	• There is no space for F/W data to be downloaded.	
0x10000106	• Check sum error	

Error code Control panel	Description	Countermeasure
0x10000107	File access error • The file downloaded has an error. • The header of the file which has been read has an error. • The size of the file to be downloaded is too large. • When it is identified to be the different type of F/W.	• Check to see if the downloaded F/W is of the correct type.
0x10000108	• The area F/W is stored is destroyed, and another ISW is necessary.	• Wait until ISW is automatically executed on MFP side.
0x20000000	The temporary error when running the subset • When starting the Internet ISW in a normal program, the rebooting will start and the Internet ISW will be executed with the subset program. During the process by the subset program, it has to be in the “Failed” status unless the Internet ISW is successfully conducted. This code is used temporarily to make it in error status.	

6. Other

6.1 Disassembly/adjustment prohibited items

A. Screws to which blue paint or green paint is applied

- **Blue paint or green paint is applied to some screws to prevent them from coming loose.**
- **As a general rule, screws to which blue paint or green paint is applied should not be removed or loosened.**

B. Red-painted screws

- **Do not remove or loosen any of the red-painted screws in the field. It should also be noted that, when two or more screws are used for a single part, only one representative screw may be marked with the red paint.**

C. Variable resistors on board

NOTE

- **Do not turn the variable resistors on boards for which no adjusting instructions are given in Adjustment/Setting.**

D. Removal of PWBs

⚠ **CAUTION**

- **When removing a circuit board or other electrical component, refer to "Handling of PWBs" and follow the corresponding removal procedures.**
- **The removal procedures given in the following omit the removal of connectors and screws securing the circuit board support or circuit board.**
- **Where it is absolutely necessary to touch the ICs and other electrical components on the board, be sure to ground your body.**

6.2 Disassembly/assembly/cleaning list (other parts)

6.2.1 Disassembly/assembly parts list

No.	Section	Part name	Ref. page
1	Exterior parts	IR upper right cover	P.79
2		IR right cover	P.79
3		IR upper rear cover	P.79
4		Left cover	P.80
5		Upper front cover	P.80
6		IR left cover	P.80
7		IR lower left cover	P.80
8		IR upper front cover	P.80
9		Original glass	P.81
10		IR front cover	P.81
11		Exit tray	P.82
12		Upper rear cover	P.82
13		Lower rear cover	P.82
14		Rear left cover	P.82
15		Multi bypass tray left cover	P.83
16		Multi bypass tray right cover	P.83
17		Multi bypass tray upper cover	P.83
18		Front door	P.83
19		Rear right cover	P.84
20		Control panel	P.86
21		Tray 1	P.87
22		Tray 2	P.88
23		Tray 2 rear right cover	P.89
24		Tray 2 rear left cover	P.89
25		Tray 2 right rear cover	P.90
26		Front cover	P.91
27	Board and etc.	Mechanical control board	P.93
28		DC power supply	P.95
29		Scanner motor drive board	P.100
30		CCD unit	P.100
31		Image processing board	P.102
32		Relay board	P.104
33		Printer control board	P.105
34		DIMM0, DIMM1	P.108
35		Hard disk drive	P.109
36		High voltage unit	P.110
37		Tray 1 paper size board	P.111
38		PC control board	P.112
39		Paper size detect board	P.114

No.	Section	Part name	Ref. page
40	Board and etc.	Inverter board	P.116
41		PH interface board	P.116
42	Unit	Multi bypass unit	P.118
43		PH unit	P.119
44		Transport drive assy	P.124
45		Hopper drive assy	P.126
46		Right door assy	P.128
47	IR section	Scanner motor	P.131
48		Scanner assy	P.135
49		Scanner drive cables	P.136
50		Original glass moving unit	P.145
51		Glass step seat	P.148
52	Others	PWB box	P.149
53		Color developing motor	P.153
54		Color PC drum motor	P.153
55		Toner supply motor C/K	P.153
56		Toner supply motor Y/M	P.154
57		Main motor	P.154
58		Fusing drive motor	P.155
59		Tray 2 lift-up motor	P.160
60		Tray 2 paper feed motor	P.160
61		Tray 2 vertical transport motor	P.162
62		IDC/registration sensor/F, IDC/registration sensor/R	P.163

6.2.2 Cleaning parts list

No.	Section	Part name	Ref.Page
1	PH	PH window	P.165
2	Processing section	Image transfer belt unit	P.166
3	Tray 1	Feed roller	P.166
4		Separation roller	P.166
5	Bypass	Feed roller	P.167
6		Separation roller	P.167
7	Tray 2	Feed roller	P.168
8		Pick-up roller	P.168
9		Separation roller	P.170
10		Transport roller	P.171
11	IR section	Scanner rail	P.171
12		Mirrors (1st/2nd/3rd)	P.172
13		Lens	P.173
14		Original glass	P.173
15		CCD sensor	P.174

6.3 Disassembly/assembly procedure

6.3.1 IR upper right cover/IR right cover/IR upper rear cover

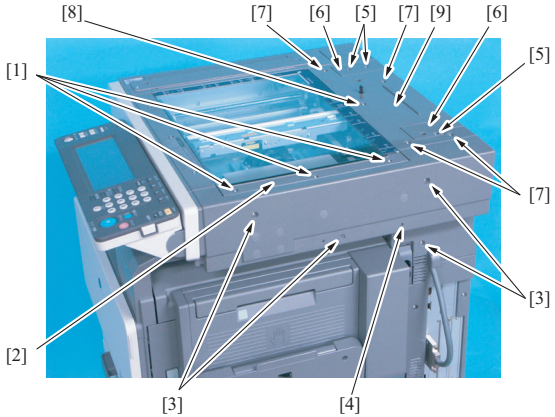

1. Remove three screws [1], and remove the IR upper right cover [2].
2. Open the fusing unit cover.
3. Remove the four screws [3], and remove the IR right cover [4].
4. Remove each screw [5], and remove two hinge covers [6].
5. Remove four shoulder screws [7] and the screw [8], and remove the IR upper rear cover [9].

6.3.2 Left cover/Upper front cover/IR left cover/IR lower left cover/IR upper front cover

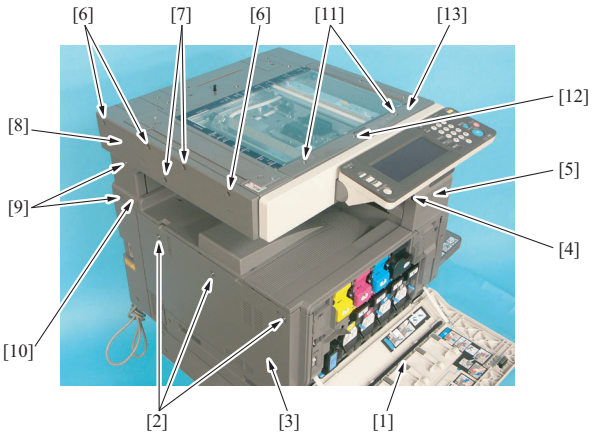

1. Open the front door [1].
2. Remove three screws [2], and remove the left tray [3].
3. Remove the screw [4], and remove the upper front cover [5].
4. Remove four shoulder screws [6] and the two screws [7], and remove the IR left cover [8].
5. Remove the two screws [9], and remove the IR lower left cover [10].
6. Remove two shoulder screws [11] and the screw [12], and remove the IR upper front cover [13].

6.3.3 Original glass/IR front cover

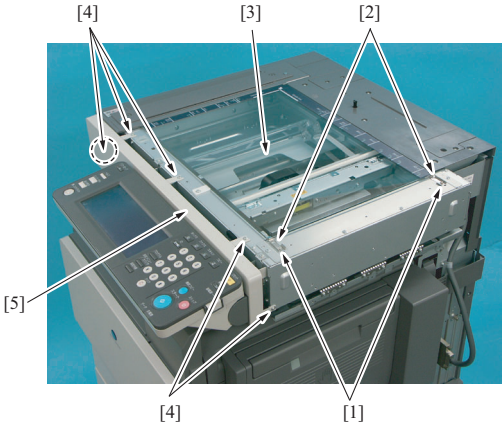

1. Remove the IR upper right cover.

See P.79

2. Remove each screw [1], and remove the original glass fixing bracket (near side/inmost side) [2].
3. Remove the original glass [3].
4. Remove the IR right cover and IR upper front cover.

See P.79, P.80

5. Remove the IR left cover.

See P.80

6. Remove five screws [4], and remove the IR front cover [5].

6.3.4 Exit tray/Upper rear cover/Lower rear cover/Rear left cover

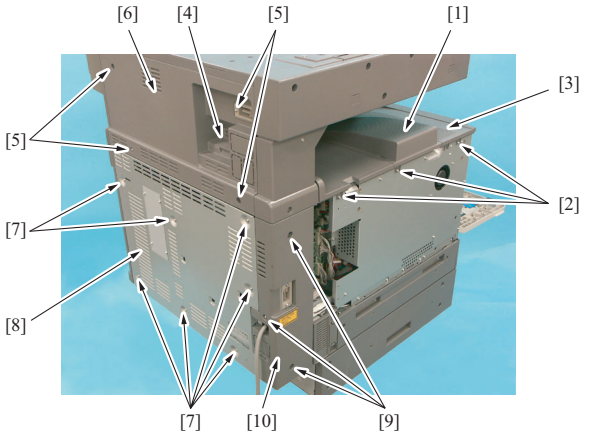

1. Remove the left cover.

See P.80

2. Remove the sub tray [1].
3. Remove three screws [2], and remove the exit tray [3].
4. Remove the dust filter/cooling fan [4].
5. Remove four screws [5], and remove the upper rear cover [6].
6. Remove seven screws [7], and remove the Lower rear cover [8].
7. Remove three screws [9], and remove the rear left cover [10].

6.3.5 Multi bypass tray left cover/Multi bypass tray right cover/Multi bypass tray upper cover

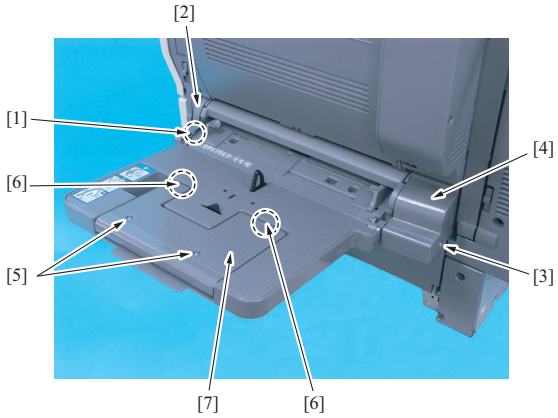

9J06F2C023DA

1. Unhook three tabs [1], and remove the multi bypass tray left cover [2].
2. Remove the screws [3], and remove the multi bypass tray right cover [4].
3. Remove two screws [5] and two tabs [6], and remove the multi bypass tray upper cover [7].

6.3.6 Front door

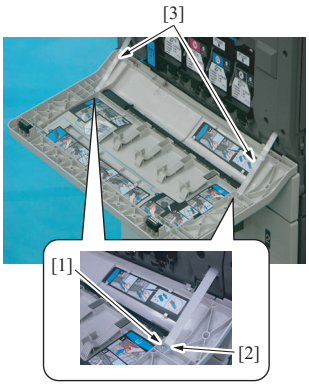

9J06F2C024DA

1. Open the front door.
2. Remove the screw [1] and suppression plate [2] each to remove the right and left stoppers [3].

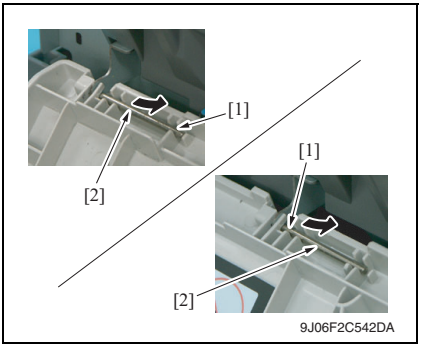

3. Pull out the right and left pins [1] to remove the front door [2].

6.3.7 Rear right cover

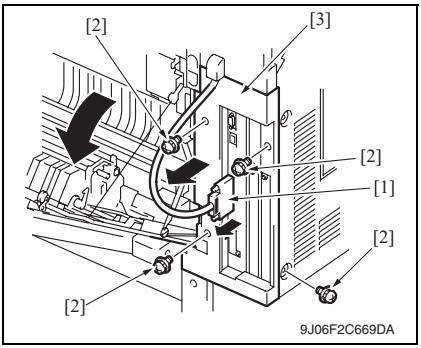

1. Disconnect the IR connector [1].
2. Open the right door.
3. Remove four screws [2], and remove the rear right cover [3].

6.3.8 Left cover

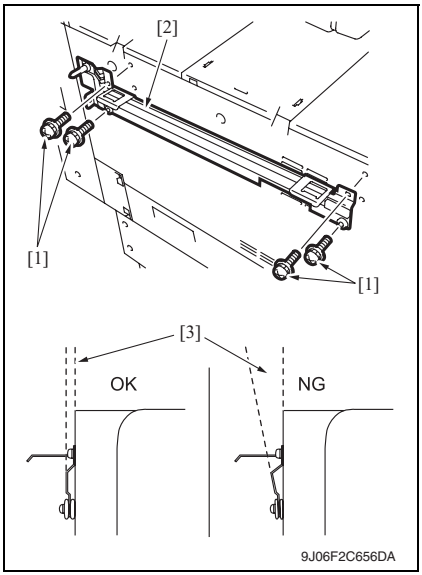

1. If the optional finisher FS-514 is mounted, remove it.

See FS-514 Service Manual.
See P.18

NOTE

- **After removing the finisher FS-514, remove four screws [1] and mounting plate [2].**
- **When reinstalling the mounting plate, do not secure two lower screws too tight, and make sure that the plate and the main unit will be parallel and the clearance between those two will be even.**

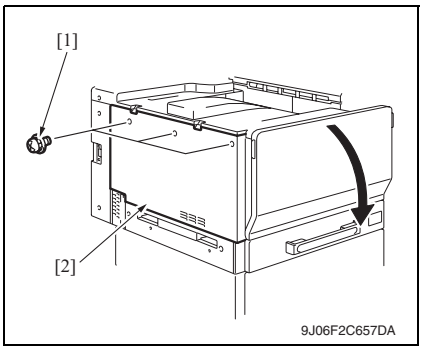

2. Open the front door.
3. Remove the three screws [1], and remove the left cover [2].

6.3.9 Control panel (UN201)

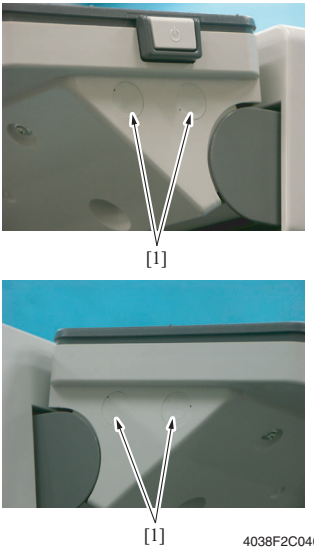

1. Remove four caps [1] at both ends of control panel.

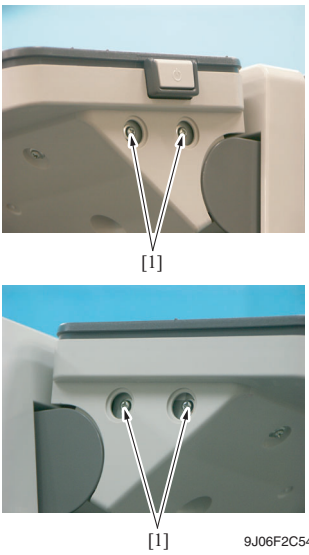

2. Remove four screws [1].

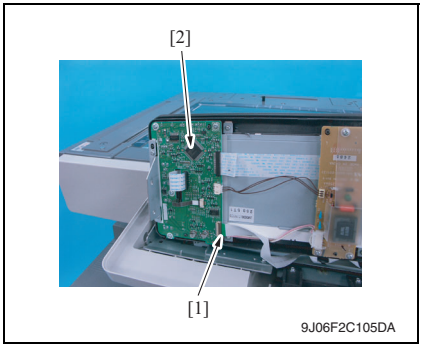

3. Remove the flat cable [1].
4. Remove the control panel [2].

6.3.10 Tray 1

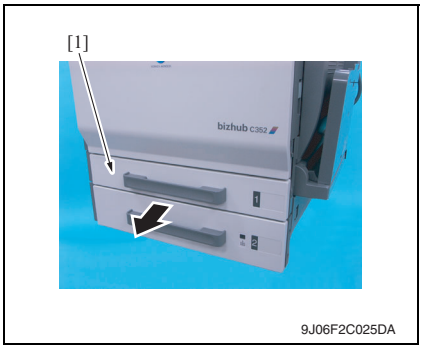

1. Slide out the tray 1 [1].

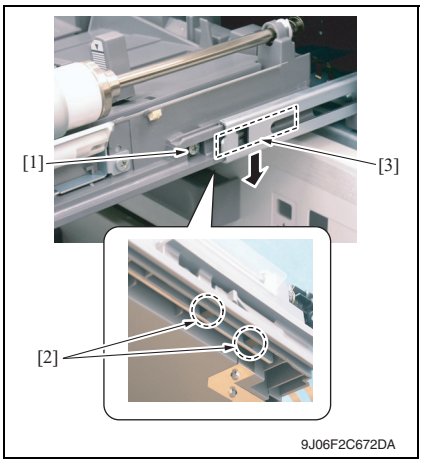

2. Loosen the screw [1], hold two tabs [2] and remove the spacer [3].

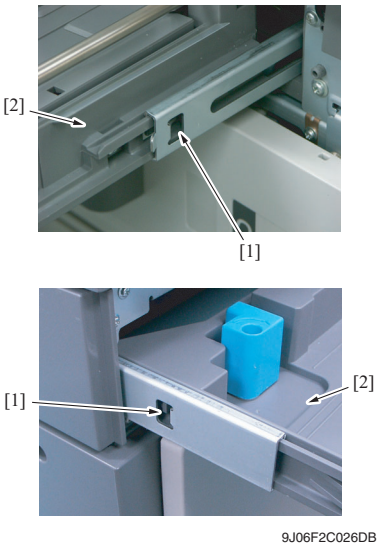

9J06F2C026DB

3. Slide out the tray 1 [2] while pressing the slide locks [1] at both ends.

6.3.11 Tray 2

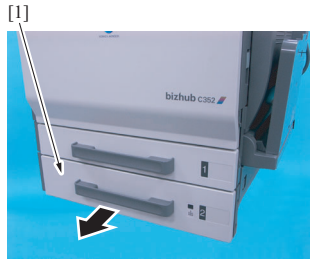

9J06F2C027DA

1. Slide out the tray 2 [1].

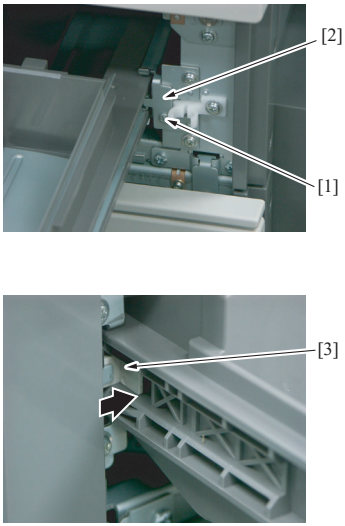

9J06F2C667DA

2. Remove the screw [1], and remove the stopper [2].
3. Slide out the tray 2 while pressing the slide locks [3].

6.3.12 Tray 2 rear right cover/Tray 2 rear left cover

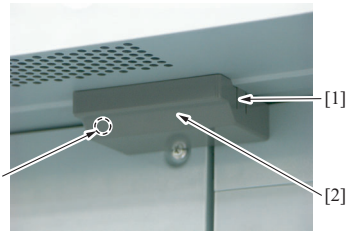

4038F2C047DA

1. Unhook two tabs [1], and remove the wiring cover [2].

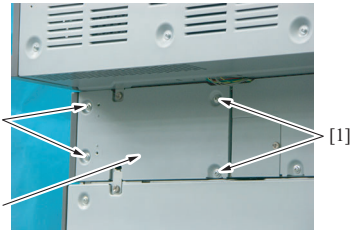

9J06F2C545DA

2. Remove four screws [1], and remove the tray 2 rear right cover [2].

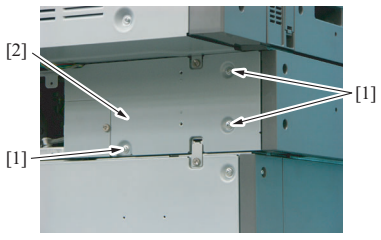

9J06F2C546DA

3. Remove three screws [1], and remove the tray 2 rear left cover [2].

6.3.13 Tray 2 right rear cover

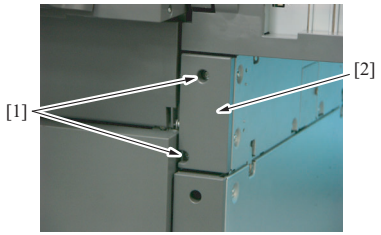

4038F2C050DA

1. Remove two screws [1], and remove the tray 2 right rear cover [2].

6.3.14 Front cover

1. Remove the front door.

See P.83

2. Remove the left cover, upper front cover and exit tray.

See P.80, P.82

3. Remove the toner cartridges (C, M, Y, K).

See P.35

4. Remove the waste toner bottle.

See P.28

5. Remove the imaging units (C, M, Y, K).

See P.36

NOTE

- **After the imaging unit has been removed from the main unit wrap it in the light shielding cloth and store it in a dark place. DO NOT leave the imaging unit exposed to light for a extended period of time as it will become damaged.**

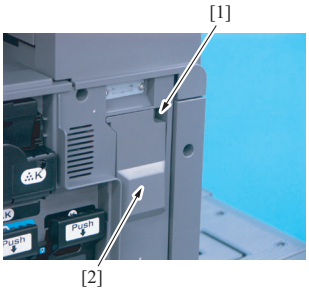

9J06F2C016DA

6. Remove the screw [1], and remove the connector protective cover [2].

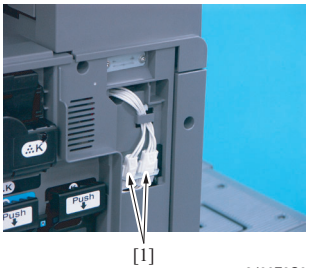

9J06F2C017DA

7. Disconnect two connectors [1].

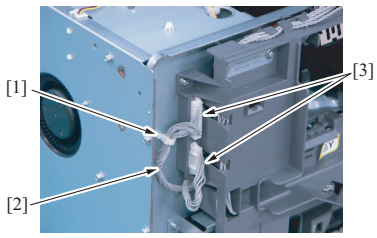

9J06F2C028DA

8. Remove the harness [2] from the wire saddle [1], and disconnect two connectors [3].

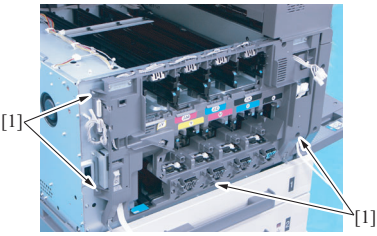

9J06F2C029DA

9. Remove four screws [1].

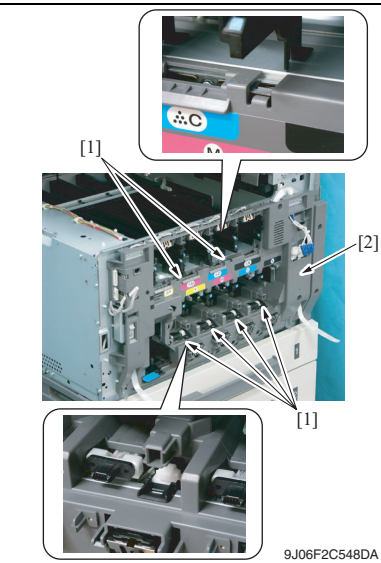

9J06F2C548DA

10. Unhook six tabs [1], and remove the front cover [2].

6.3.15 Mechanical control board (MFPB)

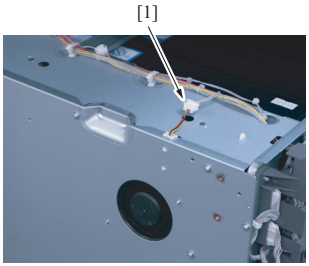

9J06F2C030DA

1. Remove the left cover.
See P.85
2. Remove the exit tray.
See P.82
3. Remove the rear left cover.
See P.82
4. Disconnect the connector [1].

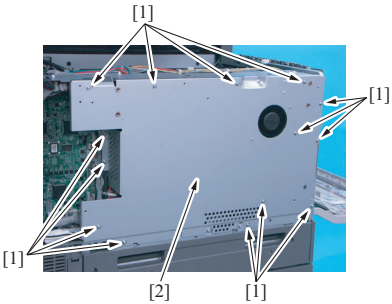

9J06F2C031DA

5. Remove fourteen screws [1], and remove the protective cover of DC power supply [2].

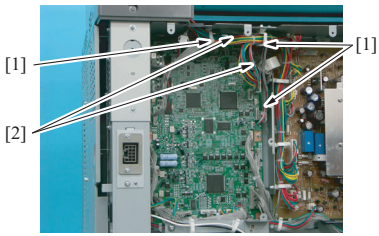

9J06F2C549DA

6. Remove the harness [2] from three wire saddles [1].

NOTE

- **When reinstalling the mechanical control board, make sure to fix the harness at the original position with the wire saddle.**

7. Remove all the connectors and flat cables on the mechanical control board.

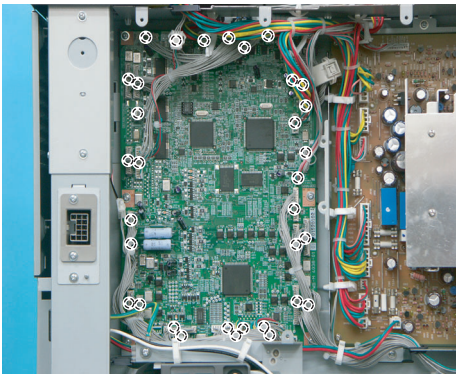

4037F2C058DB

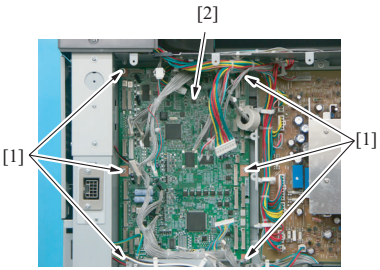

9J06F2C550DA

8. Remove six screws [1], and remove the mechanical control board [2].

NOTE

- **When mechanical control board (MFPB) is replaced, relocate the parameter chip (IC6).**
  Mount the parameter chip (IC6) of old mechanical control board onto the new mechanical control bard.

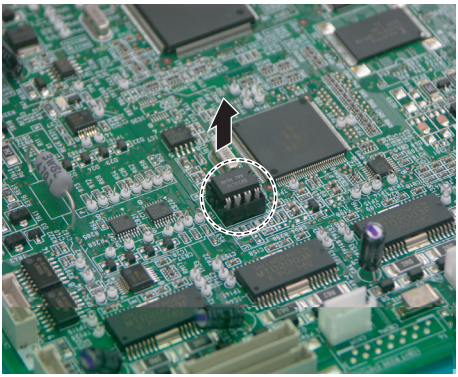

4037F2C061DB

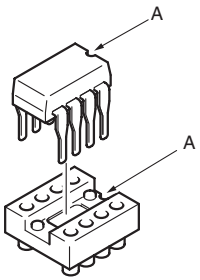

4037F2C534DA

NOTE

- **When the parameter chip (IC6) is mounted, precisely fit the directions of each "A."**

NOTE

- **When the mechanical control board is to be replaced, rewriting the firmware to the latest one.**

6.3.16 DC power supply (DCPU)

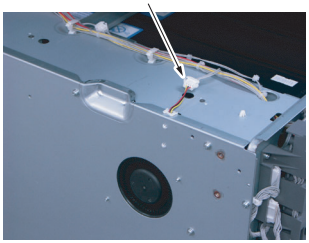

9J06F2C030DA

1. Remove the left cover.
See P.85
2. Remove the exit tray.
See P.82
3. Remove the rear left cover.
See P.82
4. Disconnect the connector [1].

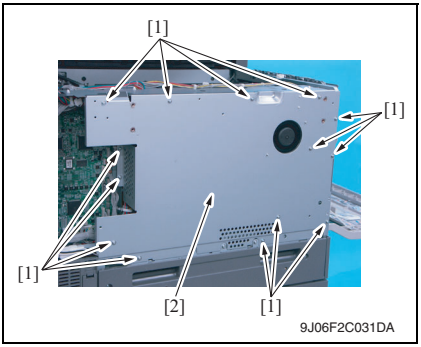

5. Remove fourteen screws [1], and remove the protective cover of DC power supply [2].

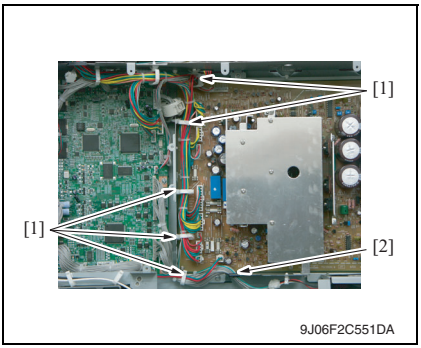

6. Remove five wire saddles [1] and the edge cover [2].

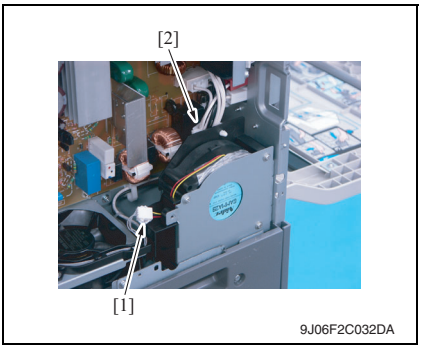

7. Disconnect the connector [1], and remove the harness from the wire saddles [2].

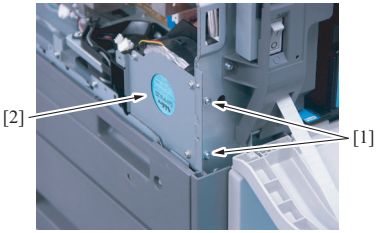

9J06F2C033DA

8. Remove two screws [1], and remove the toner suction fan motor assy [2].

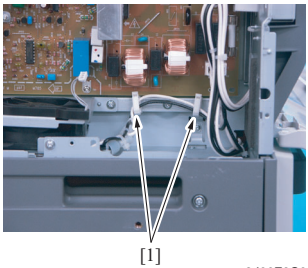

9J06F2C034DA

9. Remove the harness from the wire saddles [1].

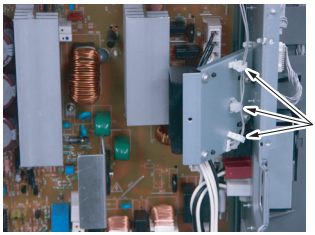

9J06F2C035DA

10. Remove three wire saddles [1].

9J06F2C036DA

11. Remove the harness from the wire saddles [1].

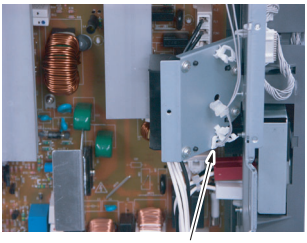

9J06F2C037DA

12. Remove the harness from the edge cover [1].

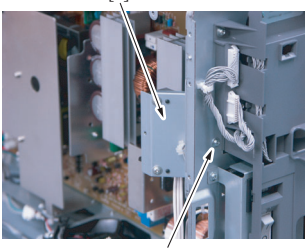

9J06F2C038DA

13. Remove the screw [1], and remove the duct assy [2].

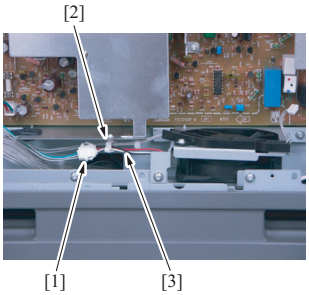

9J06F2C039DA

14. Disconnect the connector [1], and remove the harness [3] from the wire saddles [2].

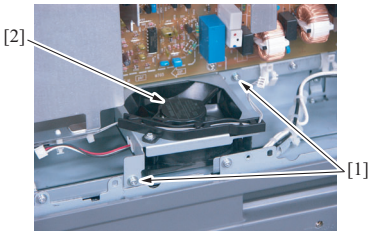

9J06F2C040DA

15. Remove two screws [1], and remove the power supply cooling fan motor/1 [2].

16. Remove all the connectors on the DC power supply.

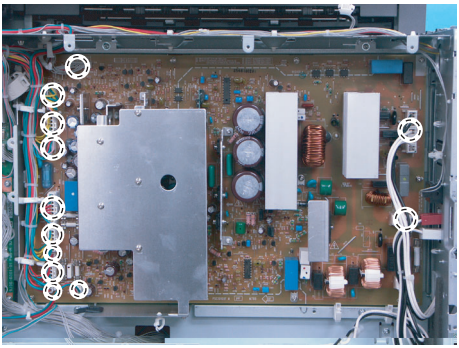

9J06F2C041DA

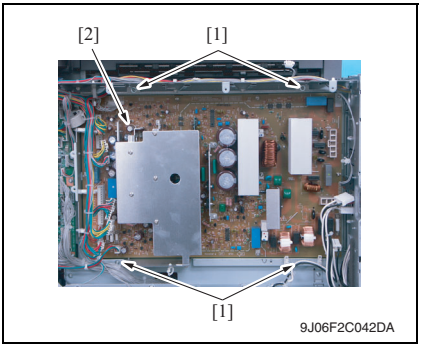

17. Remove four screws [1], and remove the DC power supply assy [2].

6.3.17 Scanner motor drive board (SCADB)

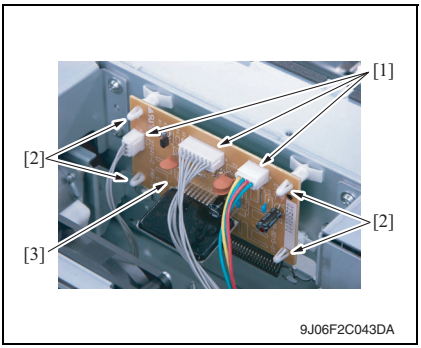

1. Remove the IR upper rear cover.
See P.79
2. Disconnect three connectors [1] and four board supports [2].
3. Remove the scanner motor drive board [3].

6.3.18 CCD unit

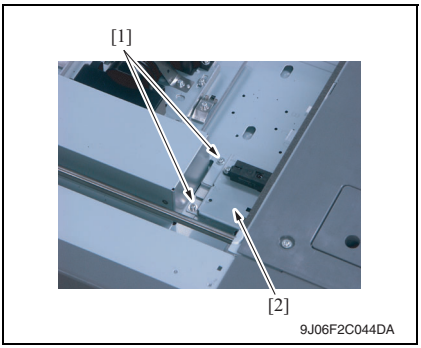

A. Removal procedure

1. Remove the original glass.
See P.81
2. Remove two screws [1], and remove the original size detection sensor assy [2].

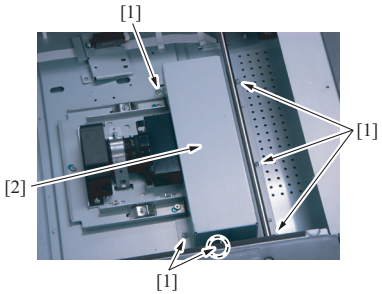

9J06F2C045DA

3. Remove six screws [1], and remove the CCD unit cover [2].

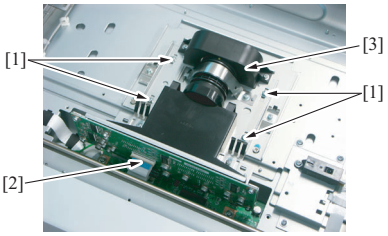

9J06F2C552DA

4. Remove four screws [1] and flat cable [4], and remove the CCD unit [3].

B. Reinstallation procedure

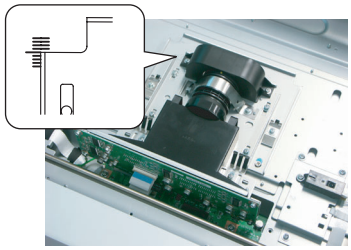

4038F2C071DA

1. Align the CCD unit with the center of the graduations as illustrated on the left and then tighten the four screws.
2. Reinstall the original glass.
3. Turn ON the main power switch.
4. Close the front door.
5. Carry out the [Cross Direction Adjustment]. If the specifications are not met, loosen the CCD unit mounting screws and move the CCD unit in the sub scan direction as necessary.

See P.318

NOTE

- **Hold the CCD unit by hand when moving it. NEVER use a screwdriver or similar tool to tap to move it, as a varied distance between the CCD sensor and lens results.**
- **When CCD unit is replaced, [Scan Calibration] and [Line Mag Setting] under [System 2] available in Service Mode should be OFF.**

6.3.19 Image processing board (IPB)

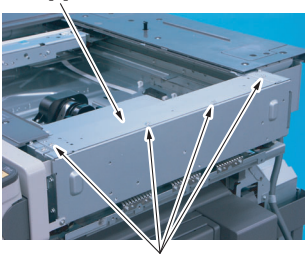

9J06F2C046DA

1. Remove the upper rear cover and IR right cover.

See P.82, P.79

2. Remove the CCD unit cover.

Refer to the step1 to 3 on P.174.

3. Remove four screws [1], and remove the IR frame protective cover [2].

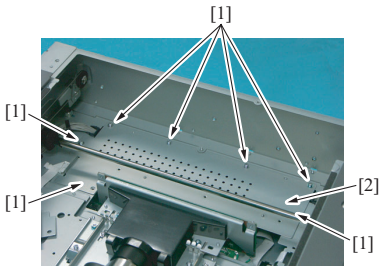

9J06F2C600DA

4. Remove seven screws [1], and remove the board cover [2].

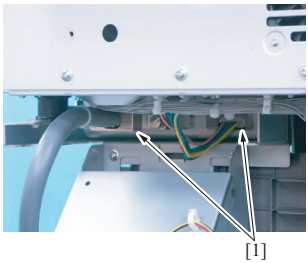

9J06F2C047DA

5. Disconnect two connectors [2].

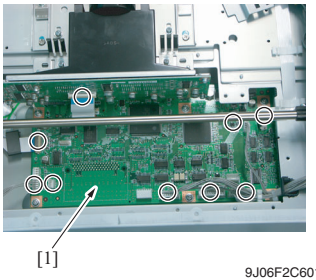

9J06F2C601DA

6. Remove all the connectors and the flat cables on the image processing board [1].

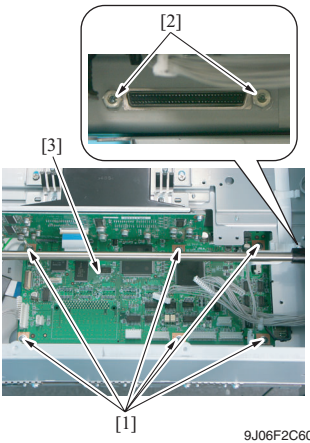

9J06F2C602DA

7. Remove six screws [1] and two bolts [2], and remove the image processing board [3].

NOTE

- **When the image processing board is replaced, make sure to update the firmware.**

6.3.20 Relay board (REYB)

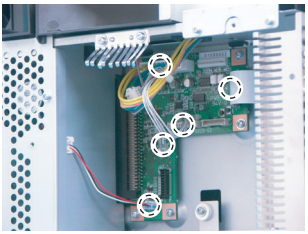
9J06F2C048DA

1. Remove the lower rear cover.
See P.82
2. Remove all the connectors and the flat cable on the relay board.

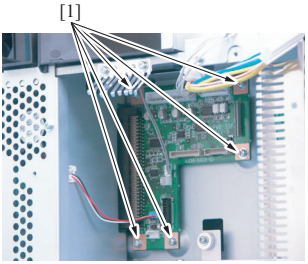

9J06F2C049DA

3. Remove five screws [1].

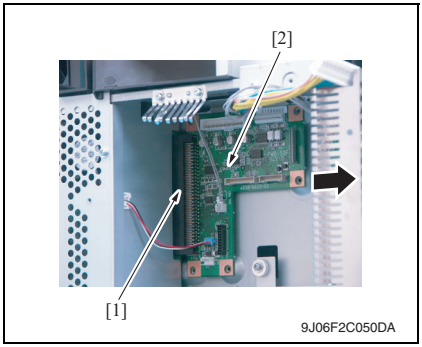

4. Disconnect the connector [1] connecting to the printer control board and remove the relay board [2].

6.3.21 Printer control board (PRCB)

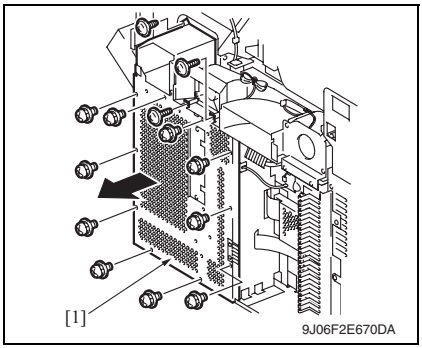

1. Remove the upper rear cover, lower rear cover and rear right cover.
See P.82, P.84
2. Remove thirteen screws, and remove the shield cover [1].

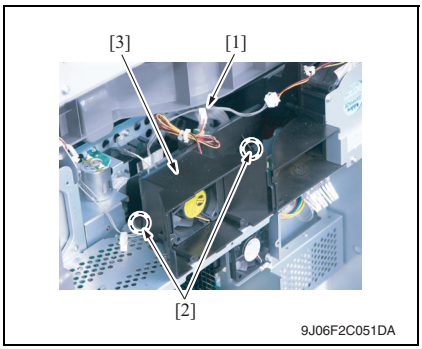

3. Remove the connector [1] and two hooks [2], and remove the duct [3].

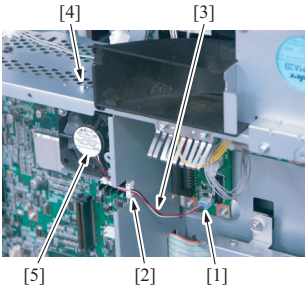

9J06F2C052DA

4. Remove the connector [1], and remove the harness [2] from the edge cover [3].
5. Remove the screw [4], and remove the printer control board cooling fan motor assy [5].

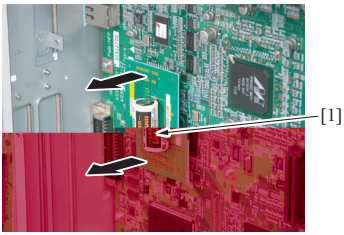

9J06F2C554DA

6. Remove the NVRAM [1] on the printer control board.

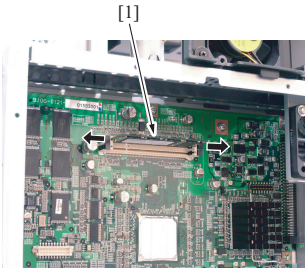

9J06F2C658DA

7. Remove the SODIMM/0 [1] on the printer control board.

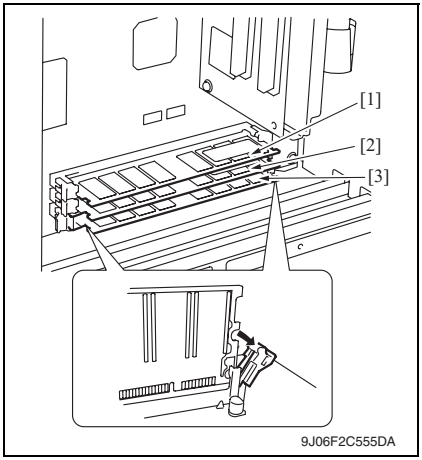

8. Remove the DIMM0 [1] and DIMM1 [2] on the printer control board.

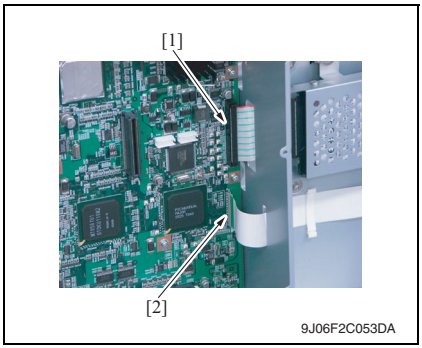

9. Disconnect the connector [1] and flat cable [2].

10. Remove the relay board.

See P.104

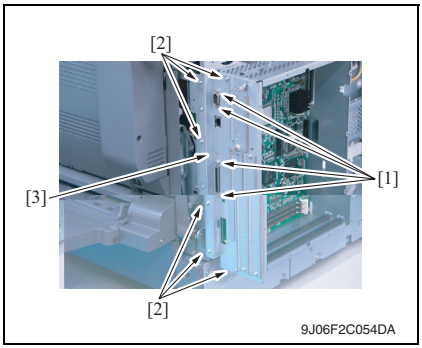

11. Remove four bolts [1] and six screws [2], and remove the interface cover [3].

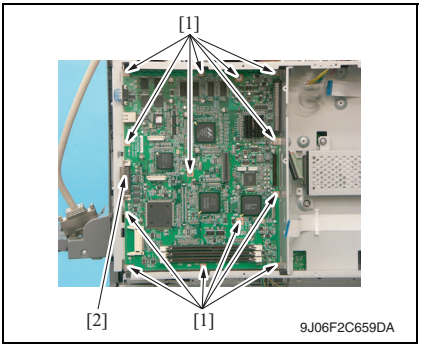

12. Remove thirteen screws [1], and remove the printer control board [2].

NOTE

- **When the printer control board is replaced, mount the removed NVRAM to the new printer control board.**
- **When the printer control board is replaced, make sure to update the firmware.**

NOTE

- **The following operation must be performed without fail when replacing the printer control board.**

① **Update the firmware to the latest version.**

② **Perform the following setting for all the patterns.**
[Service Mode] → [Imaging Process Adjustment] → [Gradation Adjust]

See P.323

③ **Perform the following setting.**
[Service Mode] → [Security Setting] → [NVRAM Data Backup]

See P.388

④ **When the copy protect pattern is registered, it needs to be reregistered.**

6.3.22 DIMM0 (Work0), DIMM1 (Work1)

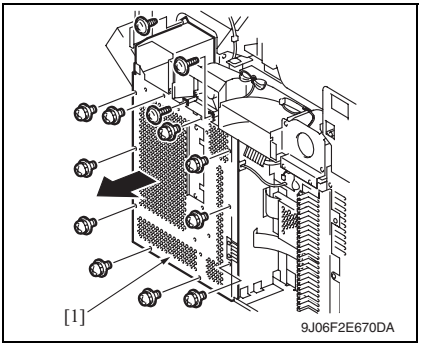

1. Remove the upper rear cover, lower rear cover and rear right cover.

See P.82, P.84

2. Remove thirteen screws, and remove the shield cover [1].

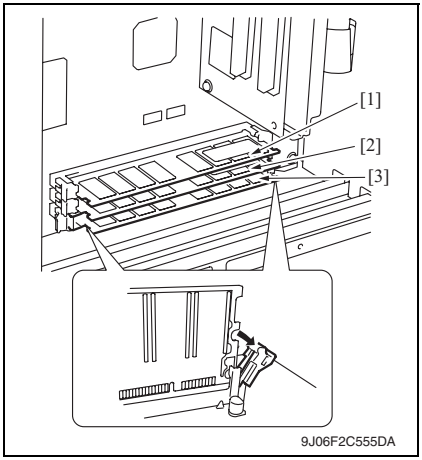

3. Remove the DIMM0 [1] and DIMM1 [2].

6.3.23 Hard disk drive (HDD)

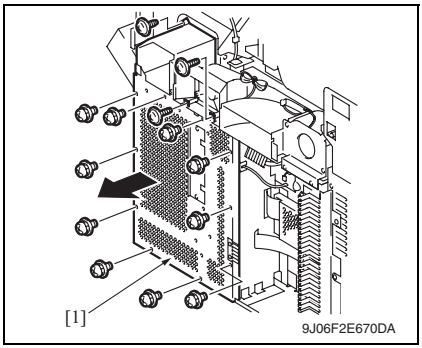

1. Remove the upper rear cover, lower rear cover and rear right cover.

See P.82, P.84

2. Remove thirteen screws, and remove the shield cover [1].

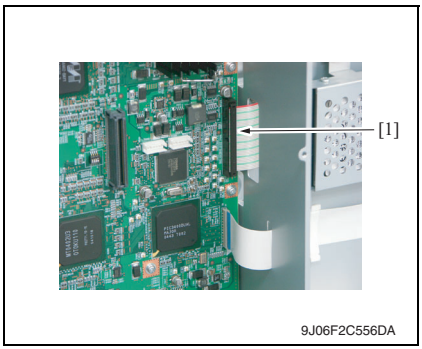

3. Disconnect the connector [1].

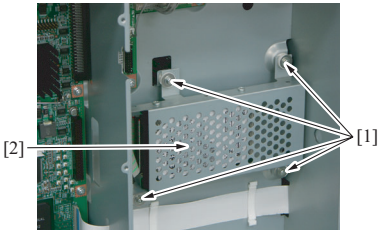

9J06F2C557DA

4. Remove the four screws [1], and remove the hard disk drive assy [2].

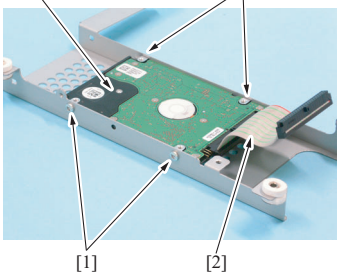

9J06F2C558DA

5. Remove four screws [1] and the flat cable [2], and remove the hard disk drive [3].

NOTE

- **When the hard disk is replaced, select [State Confirmation] → [Memory/HDD Adj.] → [HDD Format] in Service Mode for logical format.**

6.3.24 High voltage unit (HV1)

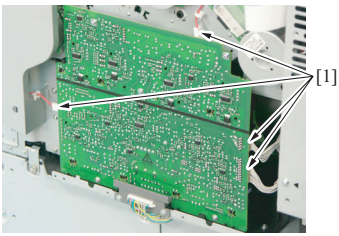

4038F2C085DA

1. Remove the PWB box.
See P.149
2. Disconnect four connectors [1].

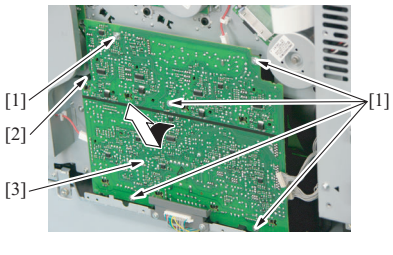

9J06F2C559DA

3. Remove five screws [1] and the tab [2], and remove the high voltage unit [3].

NOTE

- **When reinstalling the high voltage unit, make sure that the terminal end surely contacts.**

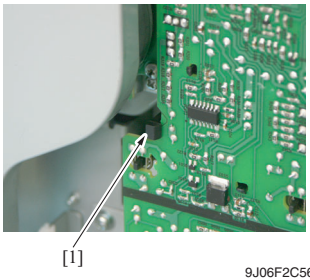

9J06F2C560DA

NOTE

- **When reinstalling the high voltage unit, make sure that the claw [1] shown in the left illustration is surely set up.**

6.3.25 Tray 1 paper size board (PSDTB)

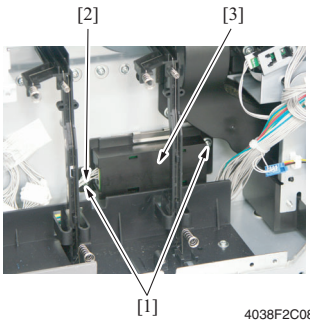

4038F2C088DA

1. Slide out the tray 1.
2. Remove the PWB box.

See P.149

3. Remove two screws [1] and connector [2], and remove the tray 1 paper size board assy [3].

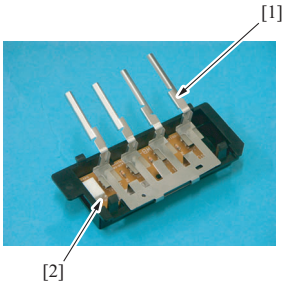

9J06F2C566DA

4. Remove the lever [1].
5. Remove the tray 1 paper size board [2].

6.3.26 PC control board (PCCB)

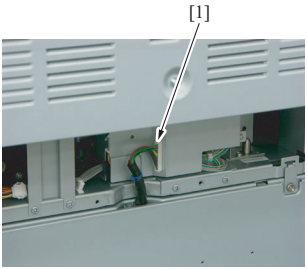

4038F2C089DA

1. Remove the tray 2 rear right cover and tray 2 rear left cover.
See P.89
2. If the optional paper feed cabinet is mounted, disconnect the connector [1].

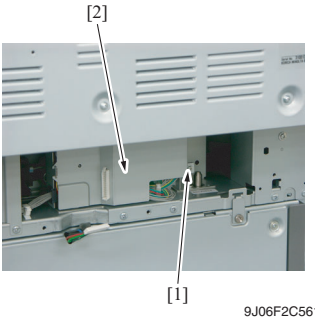

9J06F2C561DA

3. Remove the screw [1], and remove the metal blanking plate [2].

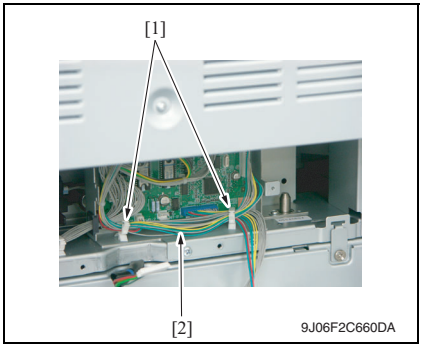

4. Remove the harness [2] from the wire saddles [1].

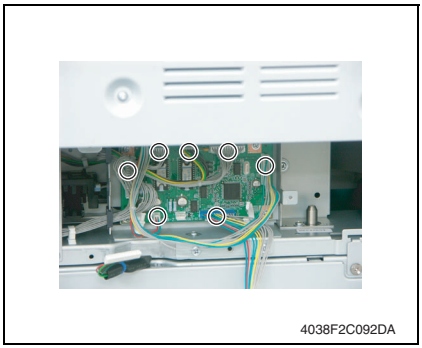

5. Remove all the connectors on the PC control board.

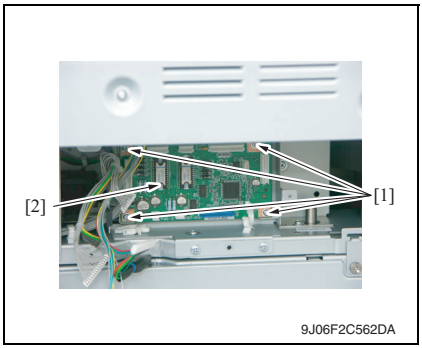

6. Remove four screws [1], and remove the PC control board [2].

6.3.27 Paper size detect board (PCDTB)

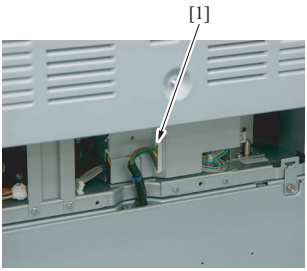

4038F2C089DA

1. Slide out the tray 2.
2. Remove the tray 2 rear right cover and tray 2 rear left cover.

See P.89

3. If the optional paper feed cabinet is mounted, disconnect the connector [1].

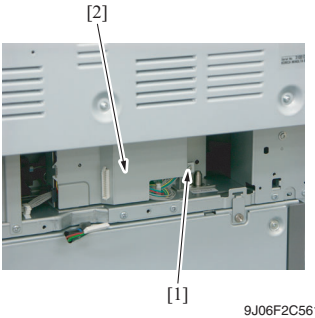

9J06F2C561DA

4. Remove the screw [1], and remove the metal blanking plate [2].

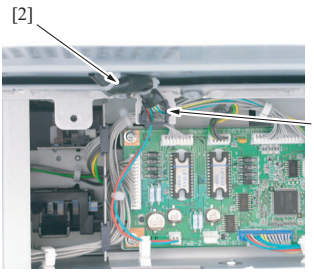

9J06F2C563DA

5. Remove the harness [2] from the edge cover [1].

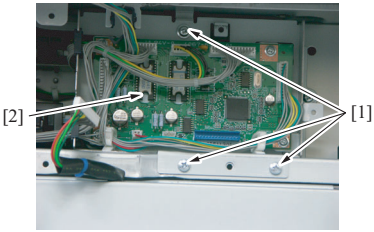

9J06F2C564DA

6. Remove three screws [1], and remove the PC control board assy [2].

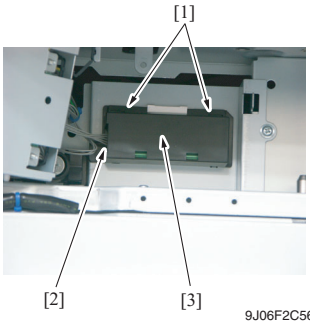

9J06F2C565DA

7. Remove two claws [1] and the connector [2], and remove the paper size detect board assy [3].

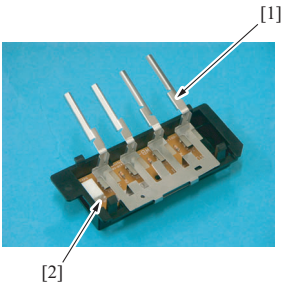

9J06F2C566DA

8. Remove the lever [1], and remove the paper size detect board [2].

6.3.28 Inverter board (INVB)

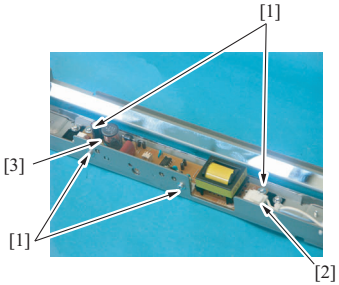

9J06F2C603DA

1. Remove the scanner assy.
See P.135
2. Remove four screws [1], and connector [2], and remove the inverter board [3].

6.3.29 PH interface board (PHICB)

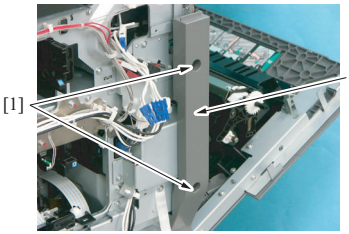

4038F2C097DA

1. Remove the front cover.
See P.91
2. Remove the image transfer belt unit.
See P.32
3. Remove two screws [1], and remove the front right cover [2].

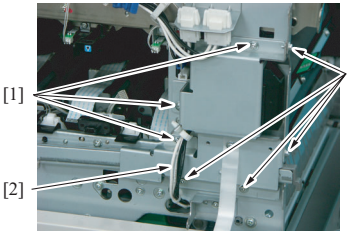

9J06F2C567DA

4. Remove seven screws [1], and remove the right door switch assy [2].

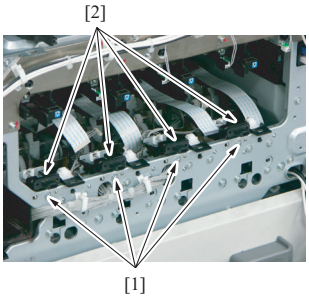

9J06F2C568DA

5. Remove the screw [1] each, and remove the imaging unit contact assy [2] of each color.

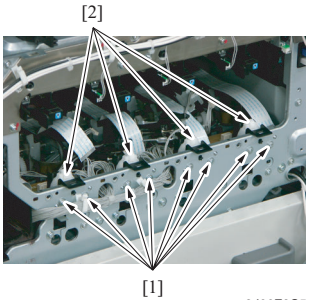

9J06F2C569DA

6. Remove two screws [1] each, and remove the imaging unit roll assy [2] of each color.

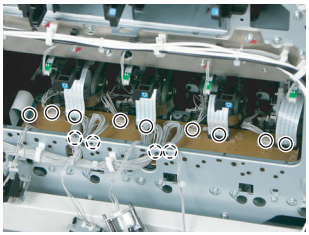

4038F2C101DA

7. Remove all the connectors and the flat cables on the PH interface board.

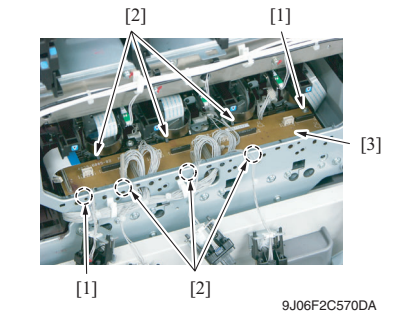

8. Remove two screws [1] and six tabs [2], and remove the PH interface board [3].

6.3.30 Multi bypass unit

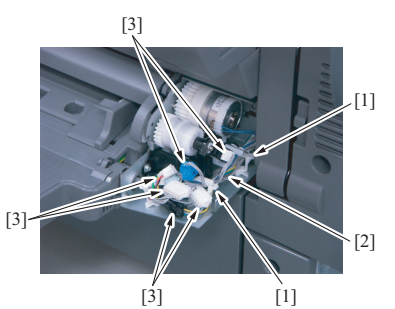

1. Remove the multi bypass tray right cover and the multi bypass tray left cover.

See P.83

2. Remove the harness [2] from the wire saddles [1].
3. Disconnect six connectors [3].

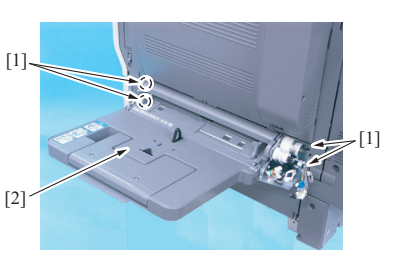

4. Remove four screws [1], and remove the multi bypass unit [2].

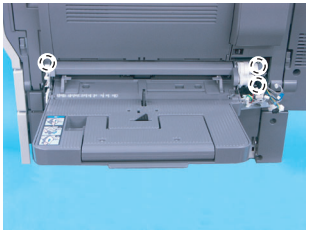

9J06F2C057DA

NOTE

- **When installing the multi bypass unit, fit the position of dowel shown in the left illustration.**

6.3.31 PH unit

NOTE

- **When replace the PH unit, replace 4-color PH units at the same time.**

A. Removal procedure

1. Remove the front cover.

See P.91

2. Remove the image transfer belt unit.

See P.32

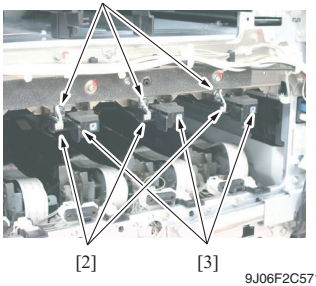

9J06F2C571DA

3. Remove the screw [1] and disconnect the connector [2] respectively, and remove three imaging unit Guide rails [3].

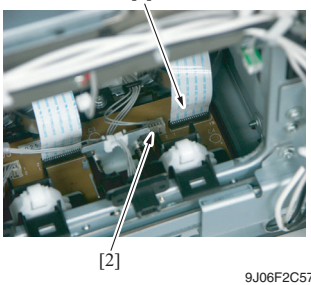

9J06F2C572DA

4. Disconnect the flat cable [1] and the connector [2] of the PH unit (black).

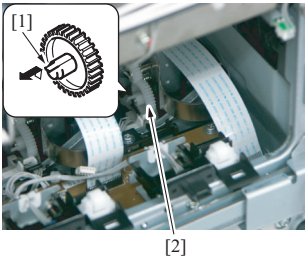

9J06F2C573DA

5. Unhook the tab [1], and remove the gear [2] of the PH unit (black).

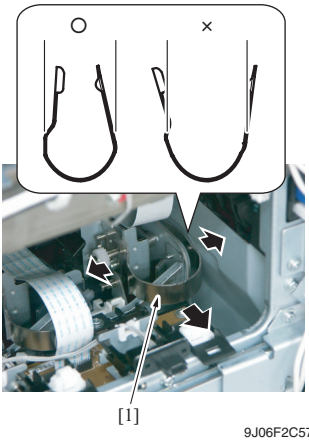

9J06F2C574DA

6. Remove the stopper [1] of the PH unit (black).

NOTE

- **When removing the stopper, use care so that both ends of the stopper will not open but stay parallel as shown on the left.**
  Keep using the stopper after once stretched out may cause uneven pitch or other image troubles.

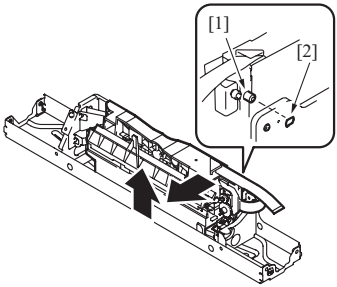

9J06F2C575DA

7. Remove the PH unit (black).

Move the front side of the PH unit to left a little, and remove the boss [1] from the locating hole [2].
Lift up the front side of the PH unit a little.

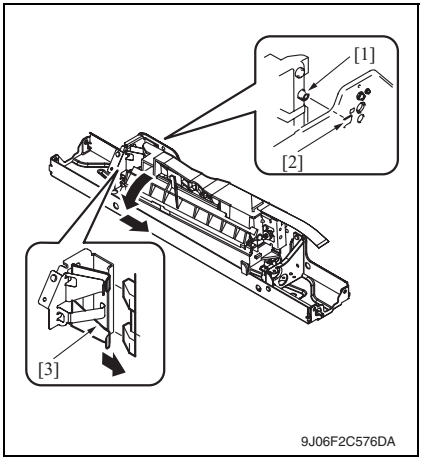

Remove the boss [1] at the rear side of the PH unit from the locating hole [2].

NOTE
Since the back of the PH unit is pushed to the right with the two plate springs [3], remove it by tilting the backside of the PH unit to the left as shown in the left illustration.

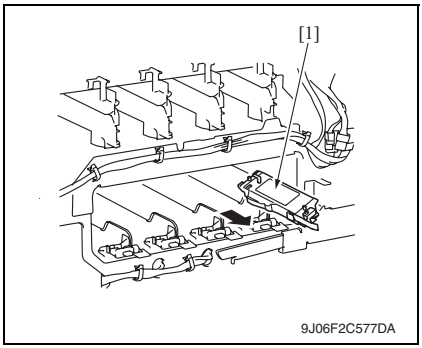

Remove the PH unit [1].

8. Follow the same procedures to remove all PH units.

B. Reinstall procedure

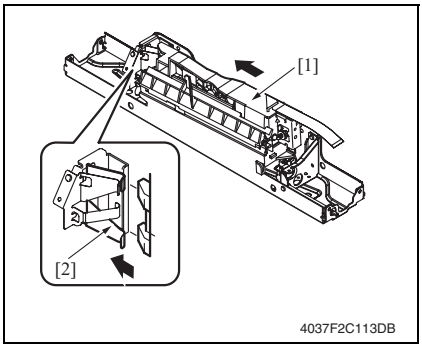

1. Fit the back of the PH unit [1] into the plate spring [2] of installation plate.

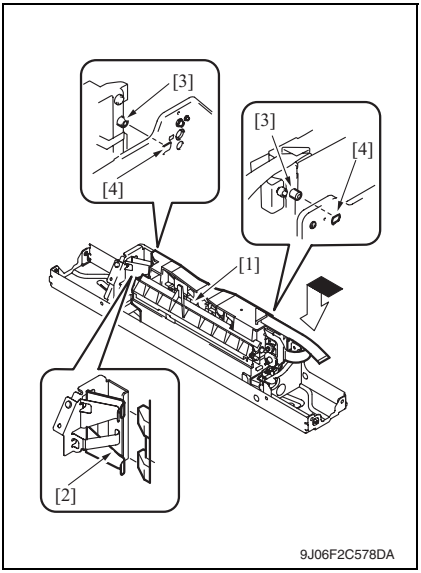

2. Push the PH unit [1] along the right side line of PH unit installation plate all the way and fit it into the plate spring [2].
3. Make sure that the two bosses [3] at front and rear side of the PH unit fit in the locating hole [4].

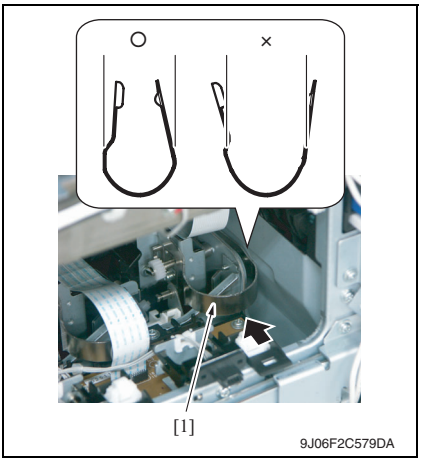

4. Reinstall the stopper [1].

NOTE

- **When reinstalling the stopper, use care so that both ends of the stopper will not open but stay parallel as shown on the left.**
  Keep using the stopper after once stretched out may cause uneven pitch or other image troubles.

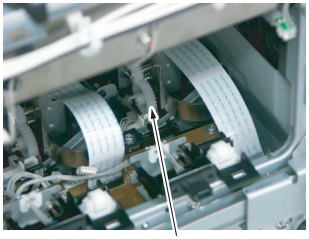

9J06F2C580DA

5. Reinstall the gear [1].

NOTE

- **Make sure that the gear claw is fit in.**

6. Connect the connector and the flat cable.

NOTE

- **Make sure the harness is installed along with the harness guide.**

7. Follow the same procedures to install all the PH units.

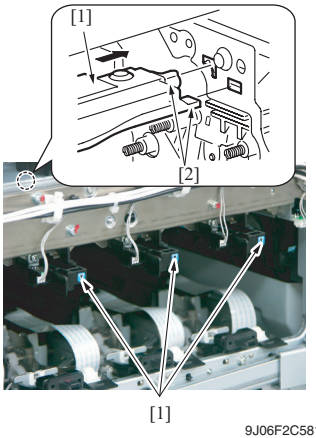

9J06F2C581DA

8. Install the imaging unit guide rail [1].

NOTE

- **Make sure that the two claws [2] at rear end of the rail are fit in the locating hole on the main unit.**

9. Reinstall the Image transfer belt unit.

10. Reinstall the front cover.

11. Make skew adjustment of the PH unit.

See P.409

NOTE

- **When replacing the PH unit, make sure to conduct PH unit skew adjustment.**

6.3.32 Transport drive assy

1. Remove the PWB box.
See P.149
2. Remove the high voltage unit.
See P.110
3. Remove the color developing motor.
See P.153
4. Remove the color PC drum motor.
See P.153
5. Remove the main motor.
See P.154
6. Remove the fusing drive motor.
See P.155

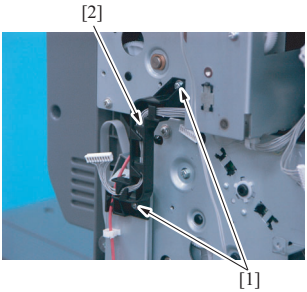

9J06F2C058DA

7. Remove two screws [1], and remove the harness guide [2].

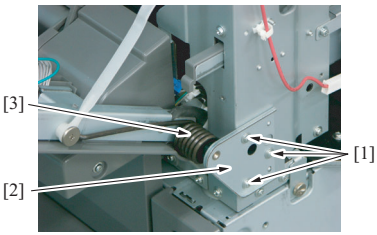

4038F2C118DA

8. Remove three screws [1], and remove the reinforcement plate [2] of the right door and spring [3].

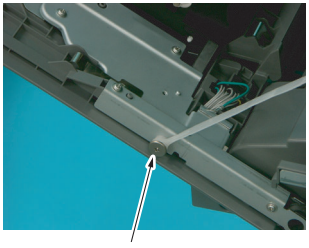

9J06F2C582DA

9. Remove the shoulder screw [1].

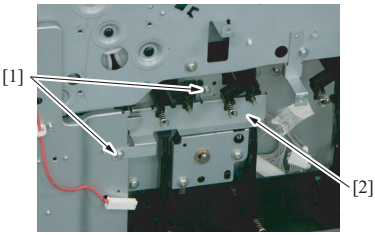

9J06F2C583DA

10. Remove two screws [1], and remove the metal blanking plate [2].

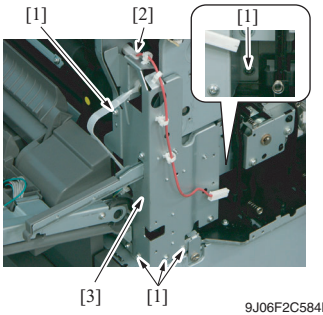

9J06F2C584DA

11. Remove five screws [1] and the connector [2], and remove the rear handle assy [3].

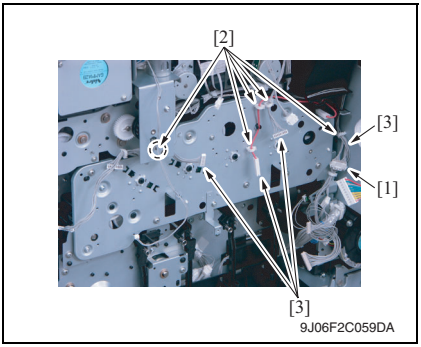

12. Disconnect the connector [1].
13. Remove the harnesses [2] from five wire saddles [3].

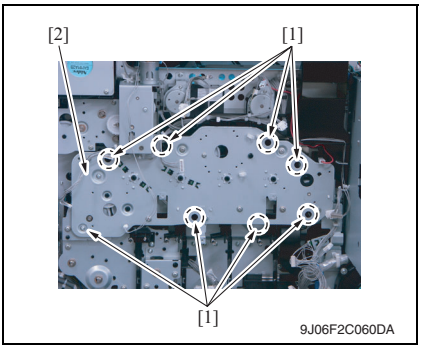

14. Remove eight screws [1], and remove the transport drive assy [2].

NOTE

- **The screw is fixed at the position with the triangle markers.**

6.3.33 Hopper drive assy

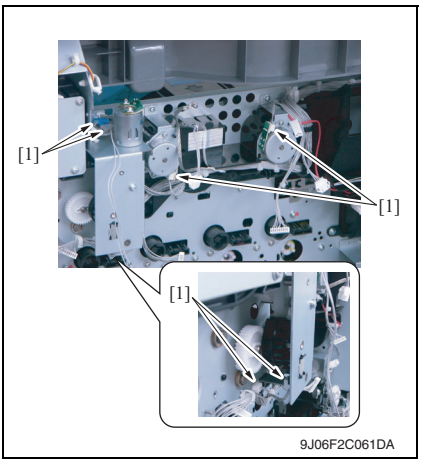

1. Remove the transfer drive assy.
See P.124
2. Disconnect six connectors [1].

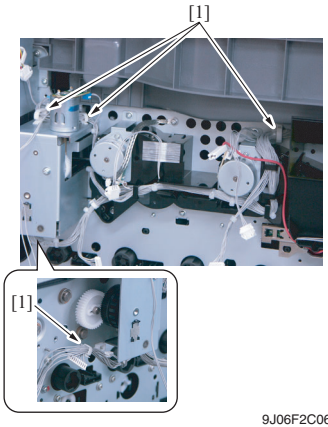

9J06F2C062DA

3. Remove the farness from four wire saddles [1].

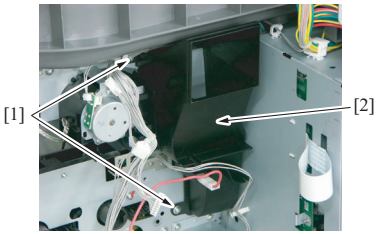

9J06F2C585DA

4. Remove two screws [1], and remove the duct [2].

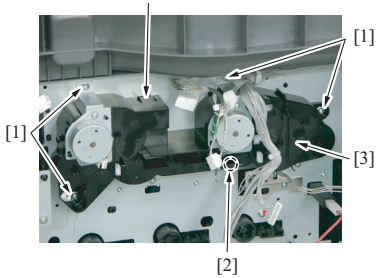

9J06F2C586DA

5. Remove four screws [1] and two claws [2], and remove the hopper drive assy [3].

6.3.34 Right door assy

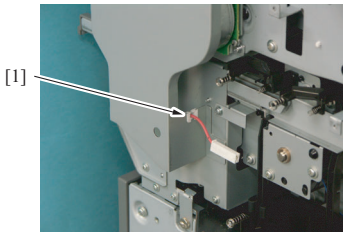

4038F2C153DA

1. Remove the PWB box.
See P.149
2. Remove the high voltage unit.
See P.110
3. Remove the IR right cover.
See P.79
4. Remove the harness from the edge cover [1].

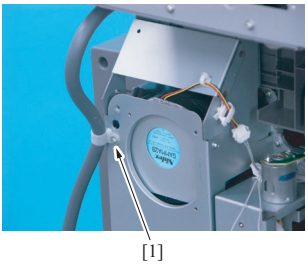

9J06F2C089DA

5. Remove the screw [1] fixing the IR cable.

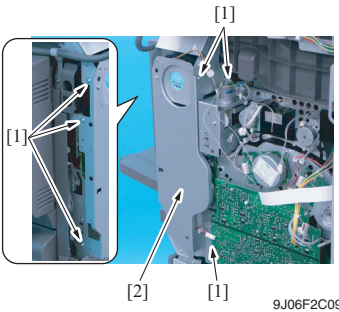

9J06F2C090DA

6. Remove six screws [1], and remove the motor cover [2].

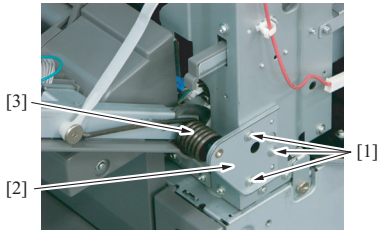

4038F2C118DA

7. Open the right door.
8. Remove three screws [1], and remove the reinforcement plate [2] of the right door and spring [3].

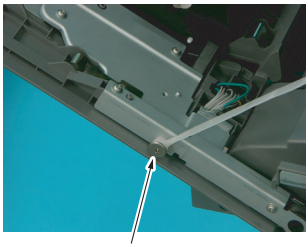

9J06F2C582DA

9. Remove the shoulder screw [1].

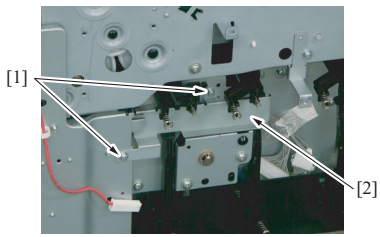

9J06F2C583DA

10. Remove two screws [1], and remove the metal blanking plate [2].

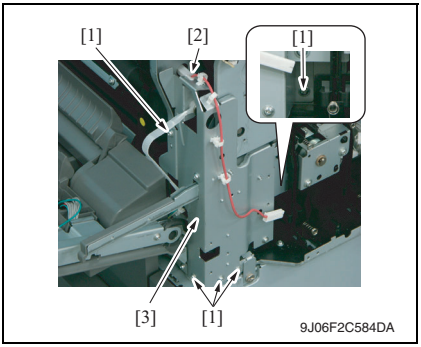

11. Remove five screws [1] and the connector [2], and remove the rear handle assy [3].

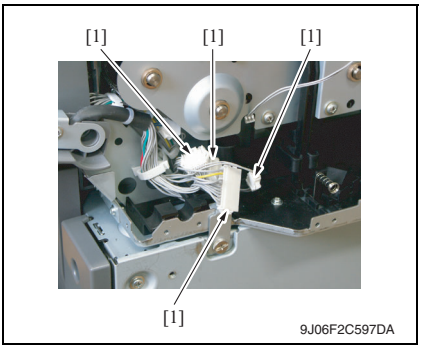

12. Disconnect four connectors [1].

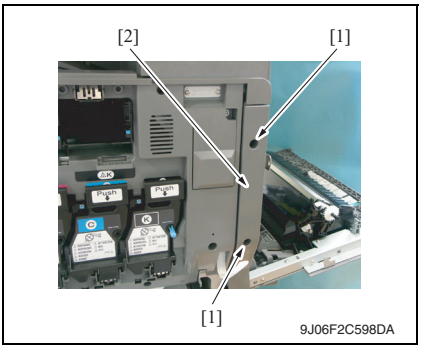

13. Remove the front door.
See P.83
14. Slide out the tray 1.
15. Remove two screws [1], and remove the front right cover [2].

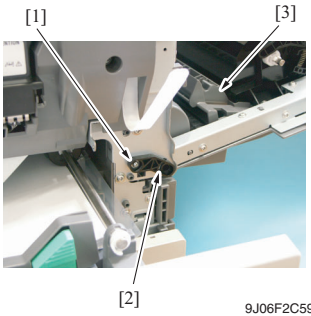

16. Remove the screw [1], and remove the shaft [2].
17. Remove the right door assy [3].

6.3.35 Scanner motor (M201)

A. Removal procedure

1. Remove the upper rear cover, the IR upper rear cover and IR left cover.
See P.82, P.79

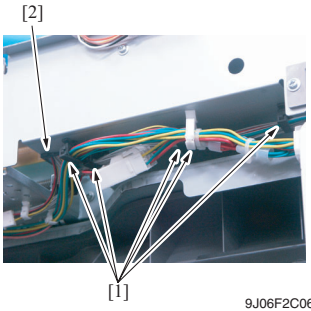

2. Remove the harness from five wire saddles [1] and the edge cover [2].

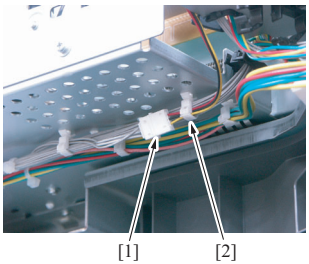

3. Disconnect the connector [1], and remove the harness from the wire saddle [2].

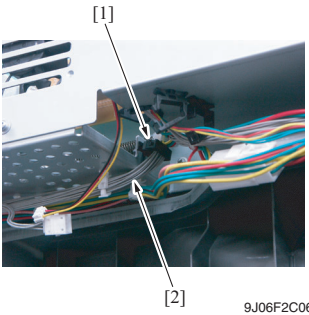

9J06F2C065DA

4. Remove the harness [2] from the wire saddle [1].

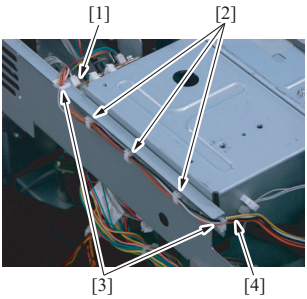

9J06F2C066DA

5. Remove the connector [1], and remove the harness [4] from three wire saddles [2] and two edge covers [3].

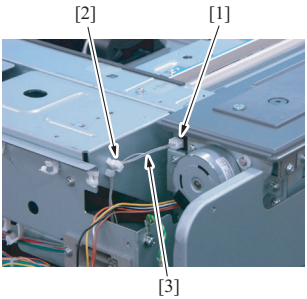

9J06F2C067DA

6. Remove the connector [1], and remove the harness [3] from the wire saddle [2].

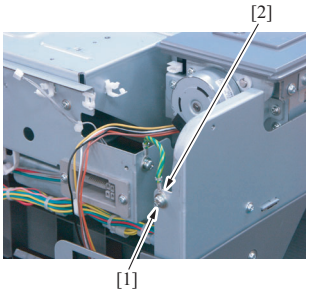

9J06F2C068DA

7. Remove the screw [1], and the ground terminal [2].

8. Remove 16 screws [1], and remove the IR reinforcement frame [2].

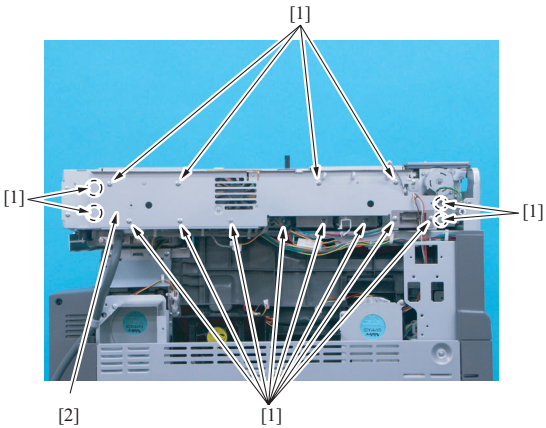

9J06F2C069DA

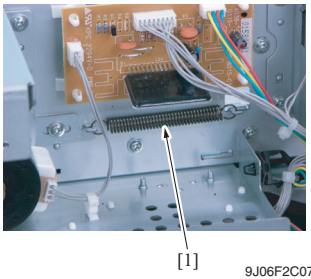

9J06F2C070DA

9. Remove the tension spring [1] for the scanner motor belt.

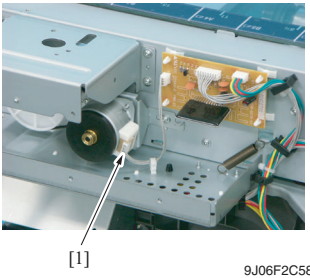

9J06F2C587DA

10. Disconnect the connector [1].

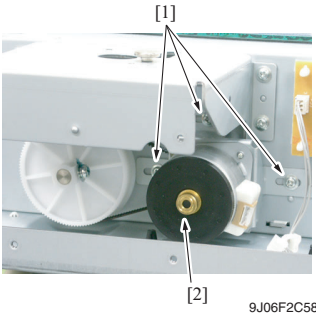

9J06F2C588DA

11. Remove three screws [1], and remove the scanner motor assy [2].

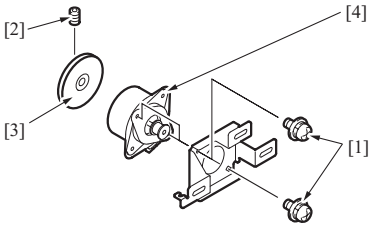

9J06F2C589DA

12. Remove two screws [1], set screw [2], damper [3], and remove the scanner motor [4].

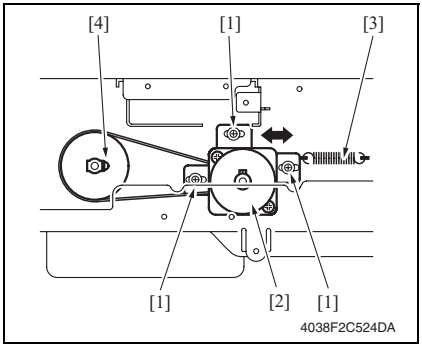

B. Reinstallation procedure

1. Temporarily secure the scanner motor assy [2] using three screws [1].
2. Hook the tension spring [3].
3. With the scanner drive gear set screw located on the right-hand side as shown on the left, slide the scanner motor assy to the left and check that it is returned to the original position by the tension of the spring. Perform this step three times.
4. Securely tighten the three screws to fix the scanner motor assy [2] into position.
5. Connect the connector and fix the harness to the wire saddle.

6.3.36 Scanner assy

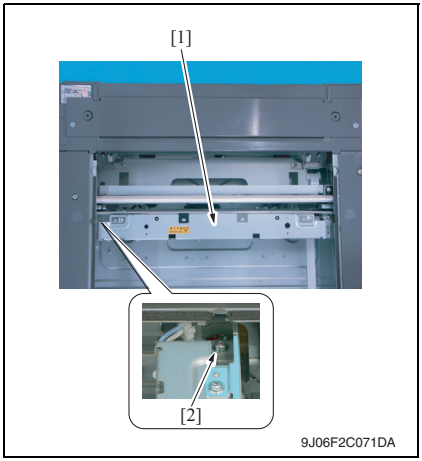

1. Remove the original glass.
See P.81
2. Move the scanner assy [1] to the notch position shown in the left illustration, and remove the mounting screws [2] at front and rear.

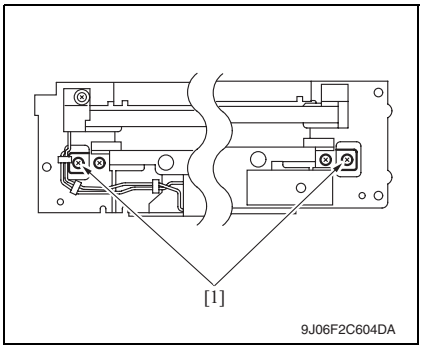

NOTE

- **Do not remove the scanner positioning screws (red-painted) [1].**

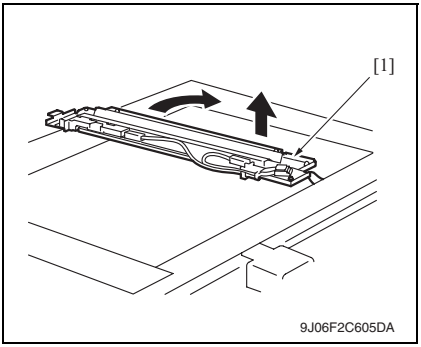

3. Take out the scanner assy [1] by turning it in the direction of the arrow shown.

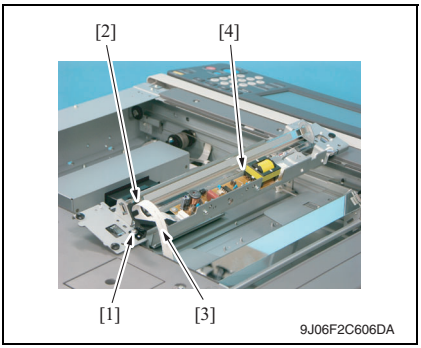

4. Remove the screw [1], and remove the holder [2].
5. Peel off the aluminum tape, and remove the flat cable [3].
6. Remove the scanner assy [4].

NOTE

- **When using the optional automatic document feeder DF-608, perform the following setting.**
  [Service Mode] → [ADF] → [Read Pos Adj]

See the optional DF-608 Service Manual.
See P.30

6.3.37 Scanner drive cables

A. Removal procedure

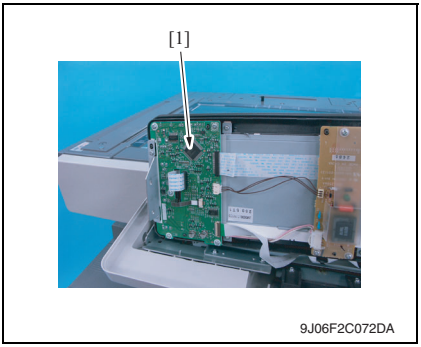

1. Remove the upper rear cover.
See P.82
2. Remove the control panel [1].
See P.86

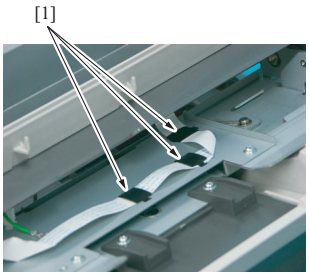

9J06F2C607DA

3. Remove three presser bars [1] of flat cable.

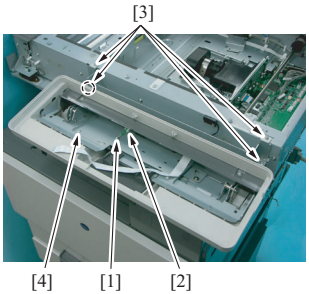

9J06F2C608DA

4. Remove the IR front cover.
See P.81
5. Remove the screw [1], and remove the ground cable from the wire saddle [2].
6. Remove four screws [3], and remove the control panel base [4].

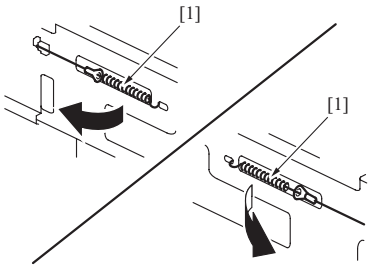

9J06F2C609DA

7. Remove the original glass.
See P.81
8. Remove the scanner assy.
See P.135
9. Remove the original glass moving unit
See P.145
10. Unhook the springs [1] of the scanner drive cables on the hook side, one each at the front and in the rear.

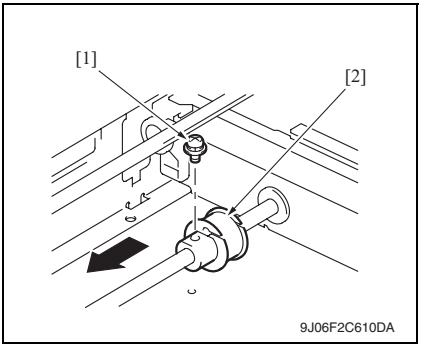

11. Remove the scanner motor assy.
See P.131

12. Remove the screw [1] and then slide the front pulley [2] toward the front.

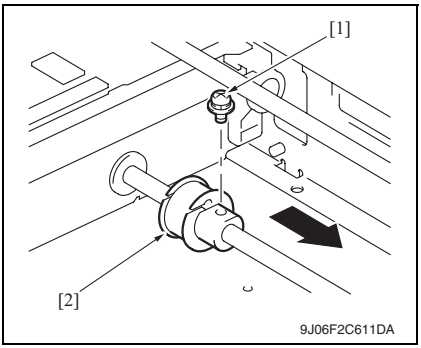

13. Remove the screw [1], and slide the wire pulley [2] (rear side) in the direction of front side.

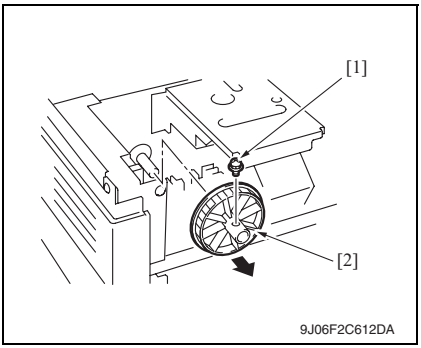

14. Remove the screw [1], and remove the scanner drive gear [2].

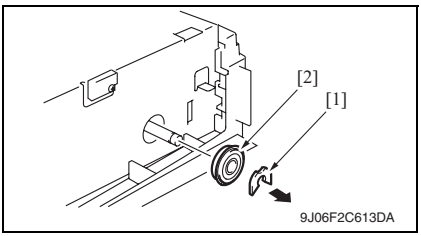

15. Snap off the C-clip [1], and remove the bushing [2] (front).

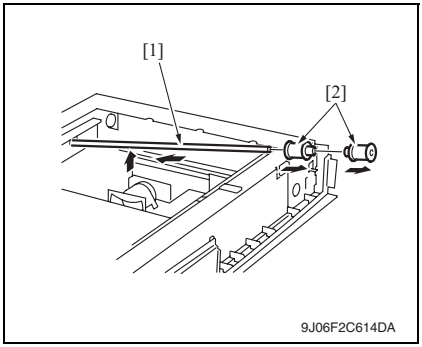

16. Slide the shaft [1] toward the rear and lift it. Then, remove the front and rear pulleys [2].

17. Remove the scanner drive cables.

B. Winding of the scanner drive cables

(1) Overall figure

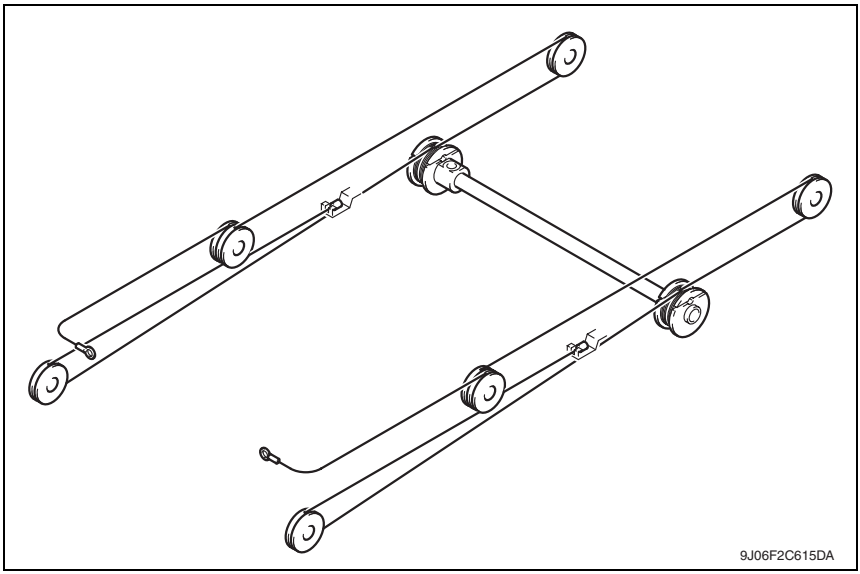

(2) Reinstallation procedure

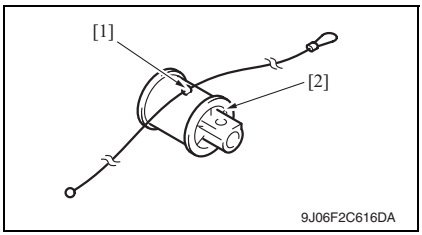

<Front>

1. Position the round bead [1] of the scanner drive cable in the pulley [2] as shown.

NOTE

- **Make sure that the bead snugly rests in the slit in the pulley.**

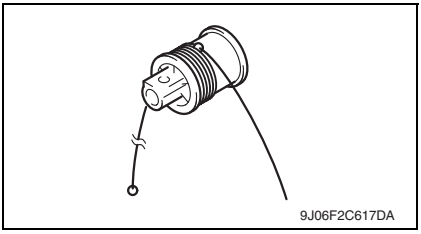

2. Wind the fixed bead end of the cable around the pulley five turns clockwise, from the rear toward the front side.

NOTE

- **Make sure that no part of the cable rides on the other.**

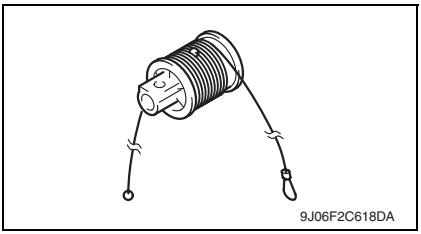

3. Wind the hook end of the cable around the pulley five turns counterclockwise, from the front toward the rear side.

NOTE

- **Make sure that no part of the cable rides on the other.**

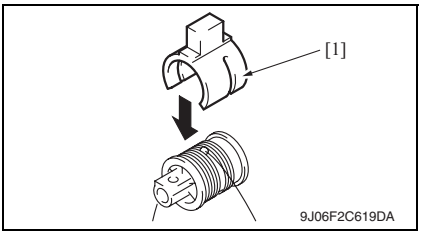

4. Slip the cable holding jig [1] onto the pulley to secure the cable in position.

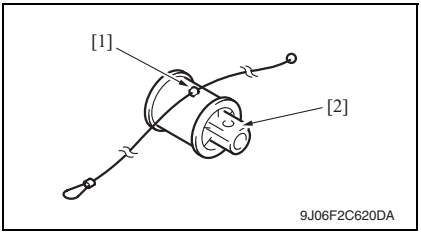

<Rear>

5. Position the round bead [1] of the scanner drive cable in the pulley [2] as shown.

NOTE

- **Make sure that the bead snugly rests in the slit in the pulley.**

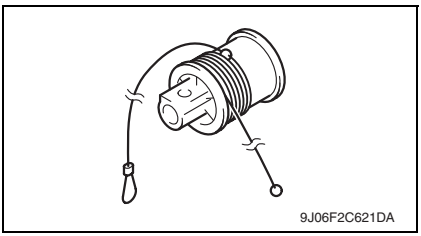

6. Wind the fixed bead end of the cable around the pulley five turns clockwise, from the front toward the rear side.

NOTE

- **Make sure that no part of the cable rides on the other.**

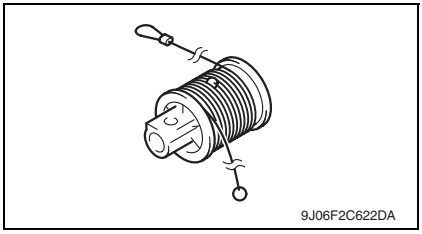

7. Wind the hook end of the cable around the pulley five turns counter-clockwise, from the rear toward the front side.

NOTE

- **Make sure that no part of the cable rides on the other.**

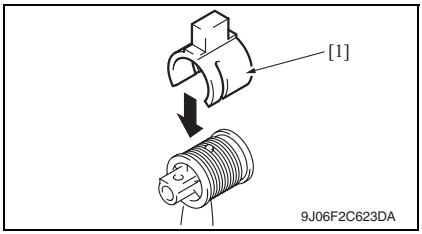

8. Slip the cable holding jig [1] onto the pulley to secure the cable in position.

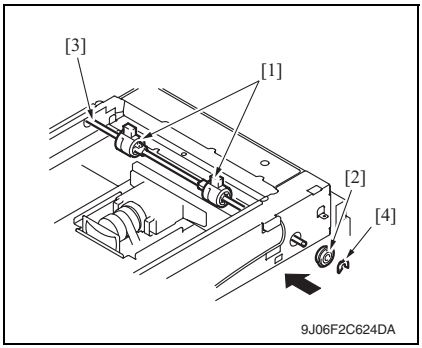

9. Install the front and rear pulleys [1] and bushings [2] onto the shaft [3] and fit the C-clip [4].

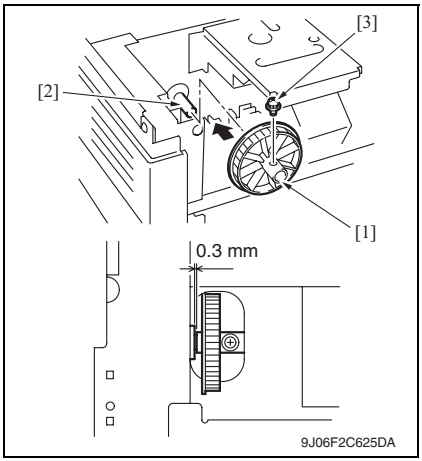

10. Mount the scanner drive gear [1] on the shaft [2] and secure it using the screw [3].

NOTE

- **Allow a clearance of about 0.3 mm between the scanner drive gear and bushing.**
- **Apply the screw lock on the screw.**

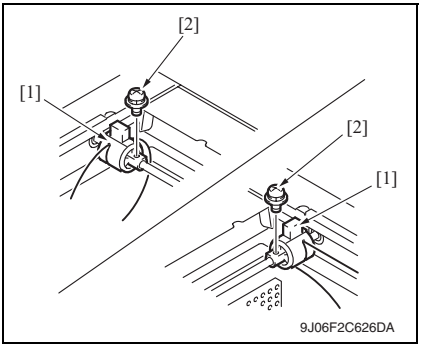

11. Secure the front and rear pulleys [1] using the screw [2] each.

NOTE

- **Apply the screw lock on the screw.**

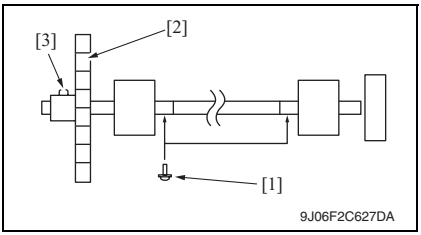

NOTE

- **Mount the screw [1] in the direction that is opposite against the direction for which scanner drive gear [2] and screw [3] are screwed together as shown in the left figure.**

12. Mount the scanner motor assy.
See P.131

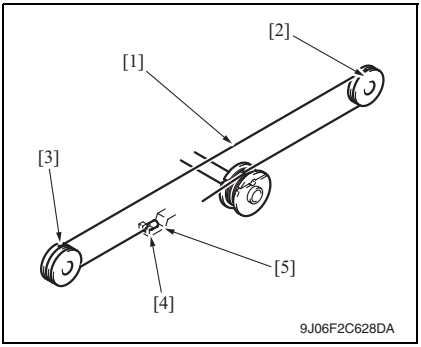

<Front>

13. Wind the bead end of the cable [1] around pulley C [2] and pulley B [3], then hook the bead [4] onto the adjustable anchor [5].

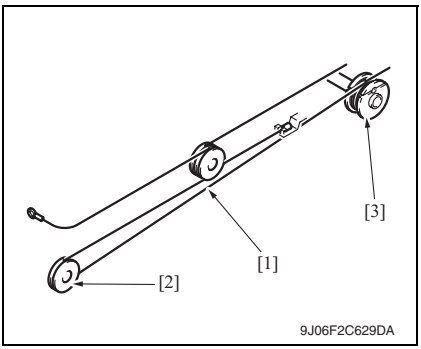

14. Wind the hook end of the cable [1] around pulley A [2] and pulley B [3].

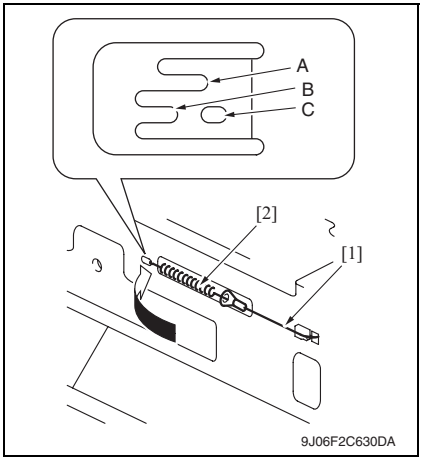

15. Fit the hook end of the cable [1] to the spring [2] and then hook the spring to the catch A in the frame.

16. Measure the spring length, and check if its length is within the range of 61.0 mm ± 1 mm.

<When out of the given range>

- In case of 62.1 mm or more:
  Retry to put the spring on the catch C.
- In case of 59.9 mm or less:
  Retry to put the spring on the catch B.

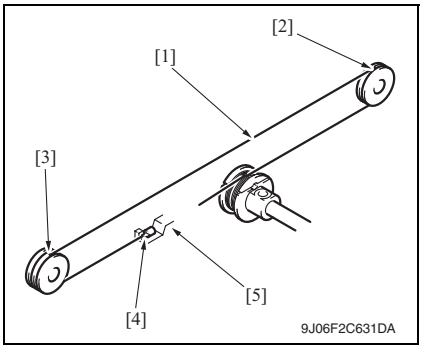

<Rear>

17. Wind the bead end of the cable [1] around pulley F [2] and pulley E [3], then hook the bead [4] onto the adjustable anchor [5].

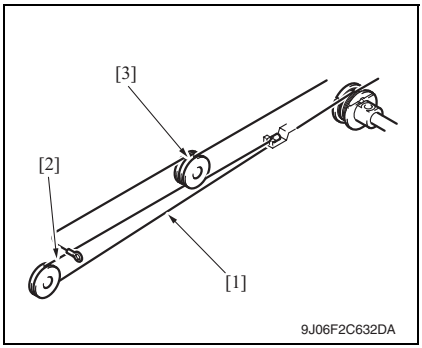

18. Wind the hook end of the cable [1] around pulley D [2] and pulley E [3].

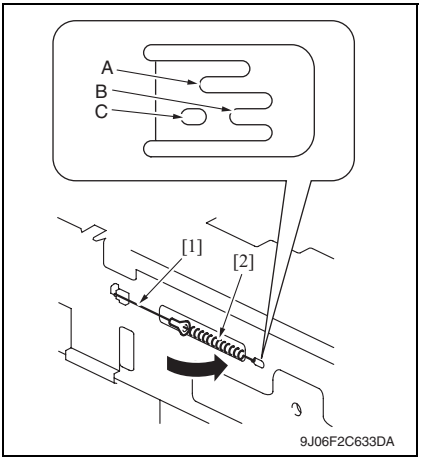

19. Fit the hook end of the cable [1] to the spring [2] and then hook the spring to the catch A in the frame.

20. Measure the spring length, and check if its length is within the range of 61.0 mm ± 1 mm.

<When out of the given range>

- In case of 62.1 mm or more:
  Retry to put the spring on the catch C.
- In case of 59.9 mm or less:
  Retry to put the spring on the catch B.

21. Remove the cable holding jigs from the front and rear pulleys.

22. Adjust the focus positioning of the scanner and mirrors unit.

See P.401

23. Adjust the position of the scanner and 2nd/3rd mirrors carriage.

See P.402

24. Mount the original glass moving unit, and adjust the height of the original glass moving unit.

See P.403

NOTE

- **Whenever the scanner drive cables have been removed, be sure to carry out the [Feed Direction Adjustment] procedure.**

See P.319

- **When using the optional automatic document feeder DF-608, perform the following setting.**
  [Service Mode] → [ADF] → [Read Pos Adj]

See the optional DF-608 Service Manual.

See P.30

6.3.38 Original glass moving unit

A. Removal procedure

1. Remove the IR right cover and IR left cover.

See P.79, P.80

2. Remove the original glass and IR front cover.

See P.81

3. Remove the IR upper rear cover and upper rear cover.

See P.79, P.82

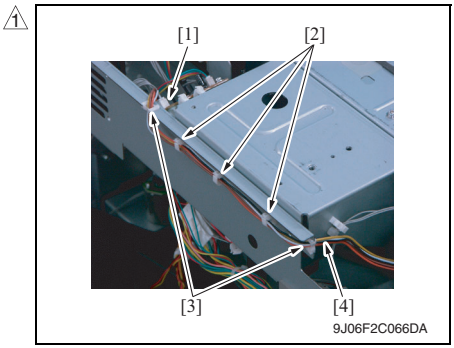

4. Remove the connector [1], and remove the harness [4] from three wire saddles [2], two edge covers [3].

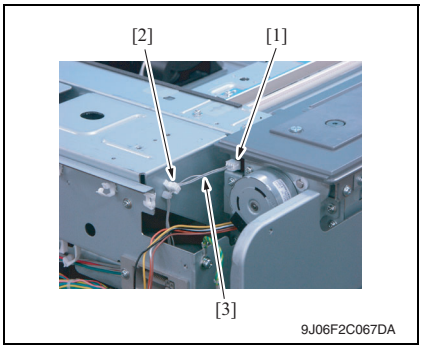

5. Remove the connector [1], and remove the harness [3] from the wire saddle [2].

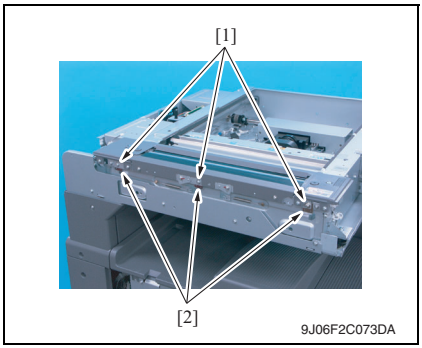

6. Remove three screws [1].

NOTE

- **Use care not to lose the spacer [2] mounted on each screw.**
- **Write down the type and numbers of the spacer [2].**
  The same numbers of the spacer of the same type with what is written should be mounted when replacing the original glass moving unit.

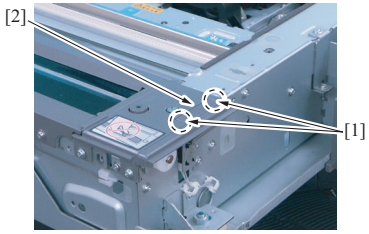

9J06F2C074DA

7. Unhook two tabs [1], remove the cover [2].

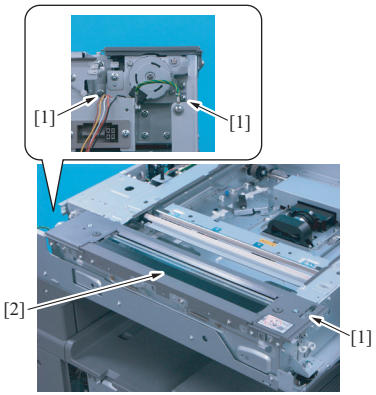

9J06F2C075DA

8. Remove the three screws [1], and remove the original glass moving unit assy [2].

B. Reinstall procedure

NOTE

- **When replacing the original glass moving unit, clean the glass surface of the original glass moving unit.**
  Clean the inside of the glass well since it cannot be easily cleaned once it is mounted.

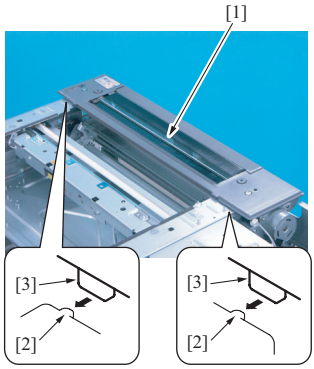

9J06F2C076DA

1. Mount the original glass moving unit [1] to the main unit.

NOTE

- **Mount the original glass moving unit [3] in a way that protruded parts on the unit will meet the tabs on the front and far side of the copier [2].**

2. Adjust the height of the original glass moving unit.

See P.403

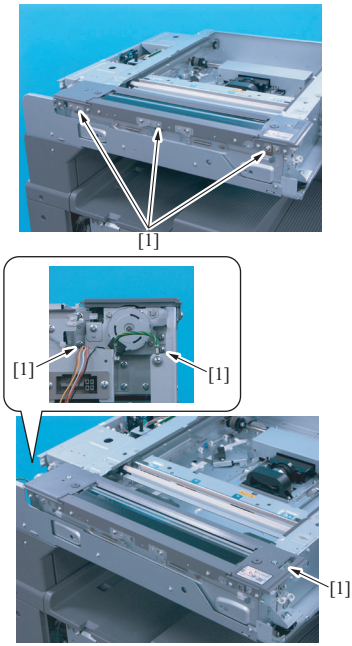

9J06F2C077DB

3. Secure six screws [1].

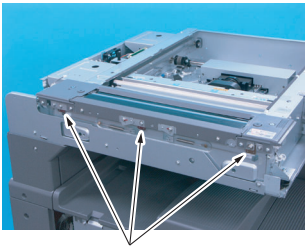

9J06F2C078DA

NOTE

- **When mounting the spacers [1] as securing the screws, spacers for the parts shown on the left should be the same numbers with the same type with the ones used before the original glass moving unit was removed.**

NOTE

- **When using the optional automatic document feeder DF-608, perform the following setting.**
  [Service Mode] → [ADF] → [Read Pos Adj]

See the optional DF-608 Service Manual.
See P.30

6.3.39 Glass step sheet

A. Removal procedure

1. Remove the IR left cover.

See P.80

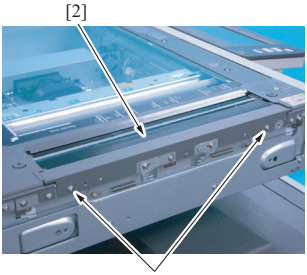

9J06F2C079DA

2. Remove two screws [1], and remove the glass step sheet [2].

B. Reinstall procedure

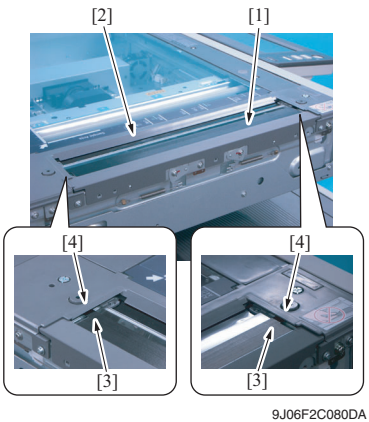

9J06F2C080DA

1. Mount the glass step sheet [1] to the original glass moving unit [2].

NOTE

- **Set the sheet [3] under the cover of the original glass moving unit [4].**
- **Use care not to bend the edge of the glass step sheet.**

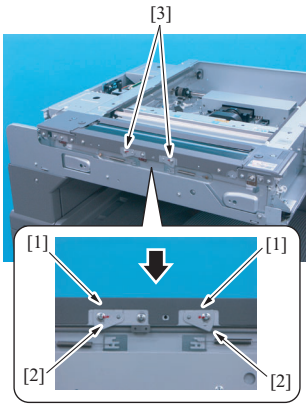

9J06F2C081DB

2. Set the points [1] of the glass step sheet to the edge of the scale plate on the original glass moving unit, and mount it with two screws [3].

NOTE

- **When using the optional automatic document feeder DF-608, perform the following setting.**
  [Service Mode] → [ADF] → [Read Pos Adj]

See the optional DF-608 Service Manual.
See P.30

6.3.40 PWB box

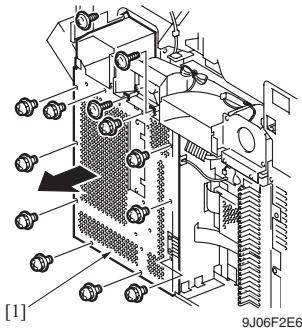

9J06F2E670DA

1. Remove the upper rear cover, lower rear cover and rear right cover.

See P.82, P.84

2. Remove thirteen screws, and remove the shield cover [1].

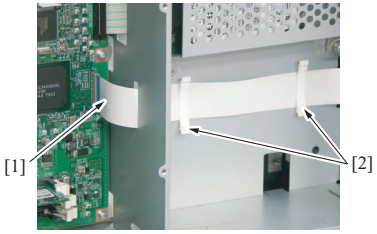

9J06F2C590DA

3. Disconnect the flat cable [1] on the printer control board, and remove two presser bars [2] of flat cable.

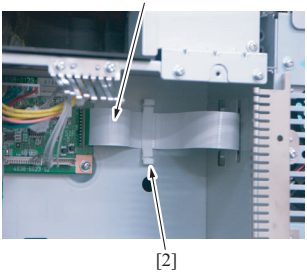

9J06F2C082DA

4. Disconnect the flat cable [1] on the relay board, and remove the presser bar [2] of flat cable.

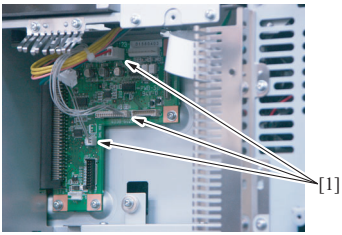

9J06F2C083DA

5. Disconnect three connectors [1] on the relay board.

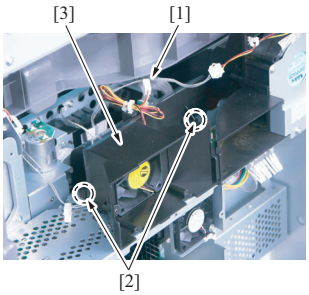

9J06F2C051DA

6. Remove the connector [1] and two hooks, and remove the duct [2].

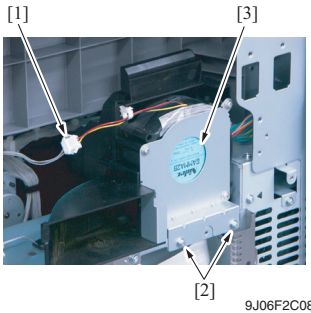

9J06F2C084DA

7. Disconnect the connector [1].
8. Remove two screws [2], and remove the cooling fan motor/1 assy [3].

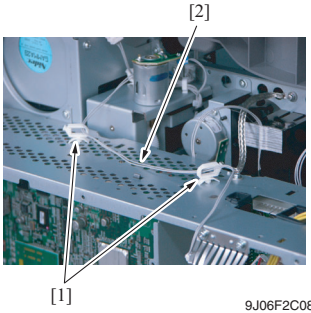

9J06F2C085DA

9. Remove the harness [2] from two wire saddles [1].

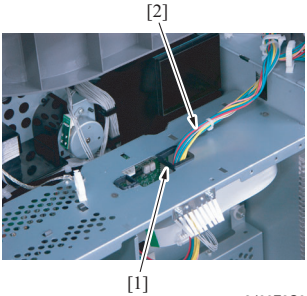

9J06F2C086DA

10. Remove the harness [2] from two edge covers [1].

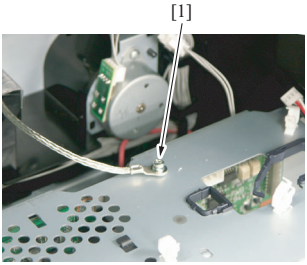

9J06F2C591DA

11. Remove the screw [1] of the ground terminal.

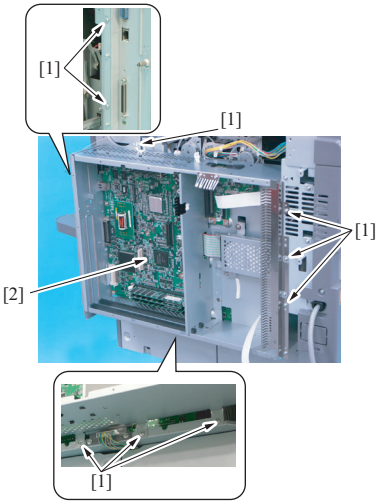

9J06F2C087DA

12. Remove nine screws [1], and remove the PWB box [2].

6.3.41 Color developing motor (M3)

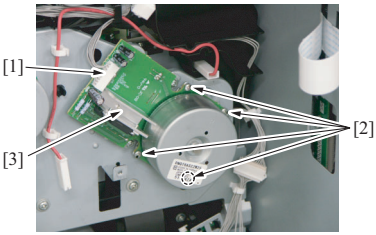

4038F2C149DA

1. Remove the PWB box.
See P.149
2. Remove the connector [1] and four screws [2], and remove the color developing motor [3].

6.3.42 Color PC drum motor (M2)

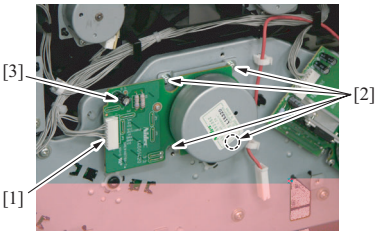

4038F2C150DA

1. Remove the PWB box.
See P.149
2. Remove the connector [1] and four screws [2], and remove the color PC drum motor [3].

6.3.43 Toner supply motor C/K (M7)

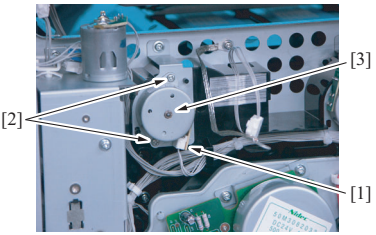

9J06F2C088DA

1. Remove the PWB box.
See P.149
2. Remove the connector [1] and two screws [2], and remove the toner supply motor C/K [3].

6.3.44 Toner supply motor Y/M (M6)

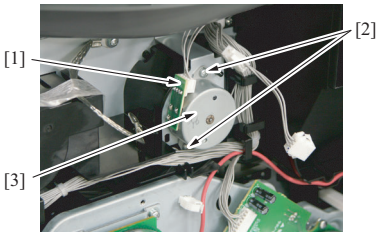

4038F2C152DA

1. Remove the PWB box.
See P.149
2. Remove the connector [1] and two screws [2], and remove the toner supply motor Y/M [3].

6.3.45 Main motor (M1)

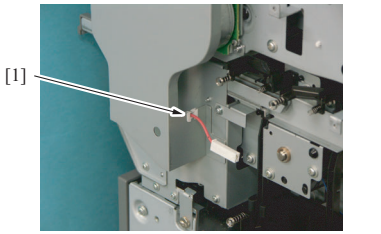

4038F2C153DA

1. Remove the PWB box.
See P.149
2. Remove the IR right cover.
See P.79
3. Remove the harness from the edge cover [1].

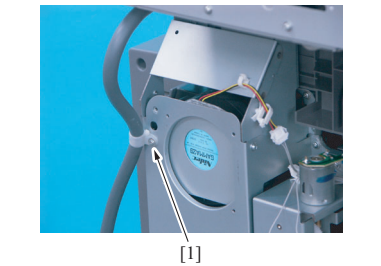

9J06F2C089DA

4. Remove the screw [1] fixing the IR cable.

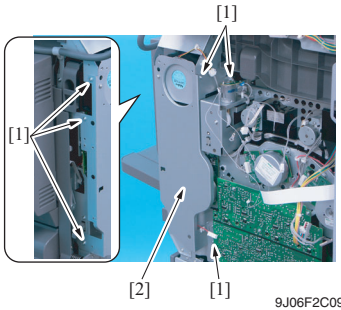

9J06F2C090DA

5. Remove six screws [1], and remove the motor cover [2].

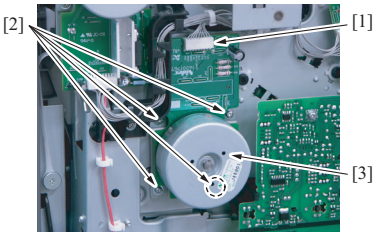

9J06F2C091DA

6. Remove the connector [1] and four screws [2], and remove the main motor [3].

6.3.46 Fusing drive motor (M4)

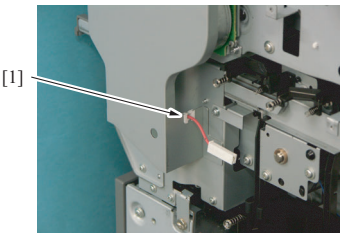

4038F2C153DA

1. Remove the PWB box.
See P.149
2. Remove the IR right cover.
See P.79
3. Remove the harness from the edge cover [1].

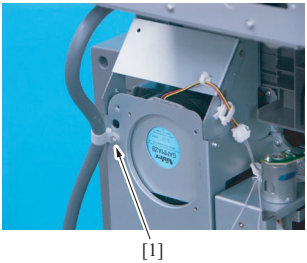

9J06F2C089DA

4. Remove the screw [1] fixing the IR cable.

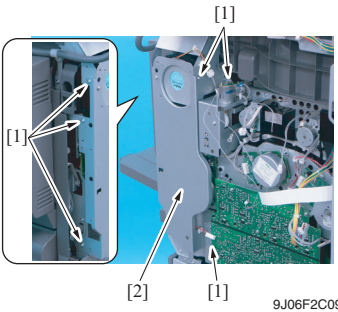

9J06F2C090DA

5. Remove six screws [1], and remove the motor cover [2].

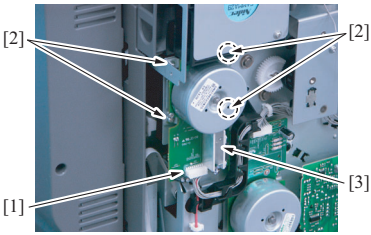

9J06F2C092DA

6. Remove the connector [1] and four screws [2], and remove the fusing drive motor [3].

6.3.47 Fusing pressure roller pressure/retraction motor (M24)

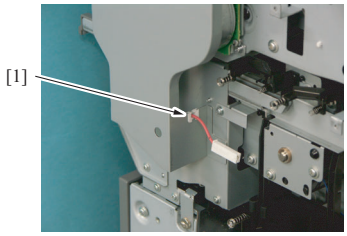

4038F2C153DA

1. Remove the PWB box.
See P.149
2. Remove the IR right cover.
See P.79
3. Remove the harness from the edge cover [1].

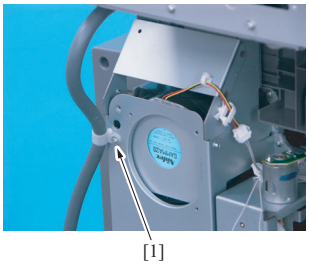

9J06F2C089DA

4. Remove the screw [1] fixing the IR cable.

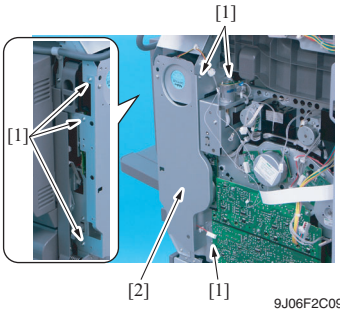

9J06F2C090DA

5. Remove six screws [1], and remove the motor cover [2].

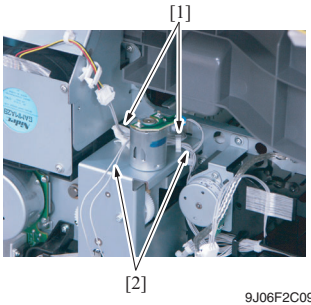

9J06F2C093DA

6. Remove the harness [2] from the wire saddles [1].

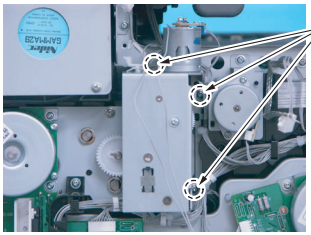

9J06F2C094DA

7. Remove three screws [1].

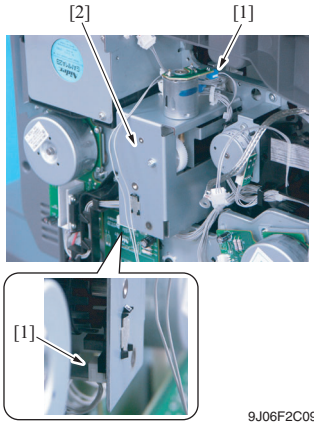

9J06F2C095DA

8. Remove two connectors [1], and remove the fusing pressure roller pressure/retraction drive assy [2].

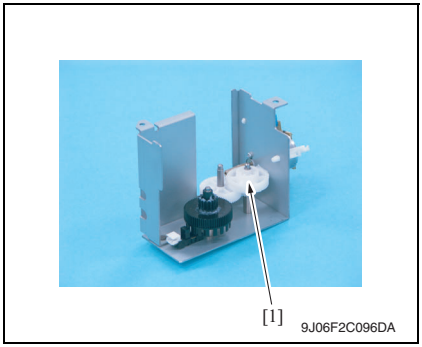

9. Remove the gear [1].

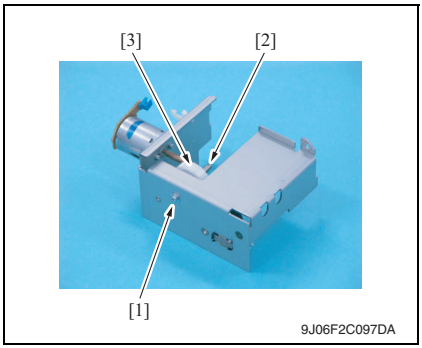

10. Remove the screw [1], and remove the shaft [2] and the gear [3].

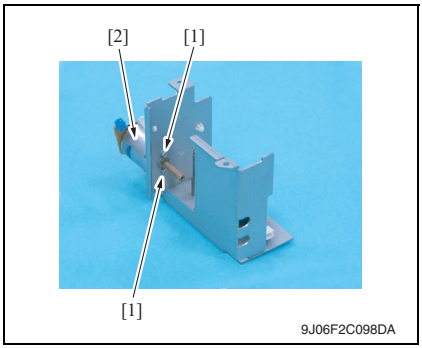

11. Remove two screws [1], and remove the fusing pressure roller pressure/ retraction motor [2].

6.3.48 Tray 2 lift-up motor (M3-PC)

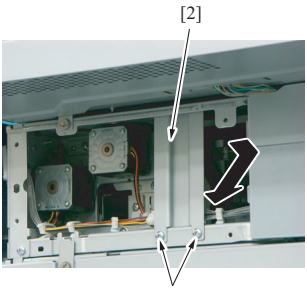

4038F2C165DA

1. If the optional paper feed cabinet is mounted, remove it.
2. Pull out the tray 2.
3. Remove the tray 2 rear right cover.

See P.89

4. Remove two screws [1], and remove the reinforcement plate [2].

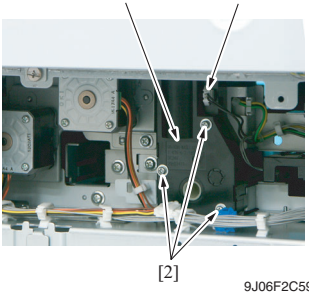

9J06F2C592DA

5. Disconnect the connector [1].
6. Remove three screws [2], remove and the tray 2 lift-up motor [3].

6.3.49 Tray 2 paper feed motor (M1-PC)

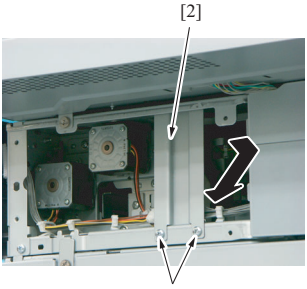

4038F2C165DA

1. Pull out the tray 2.
2. Remove the tray 2 rear right cover and the tray 2 rear left cover.

See P.89

3. Remove two screws [1], and remove the reinforcement plate [2].

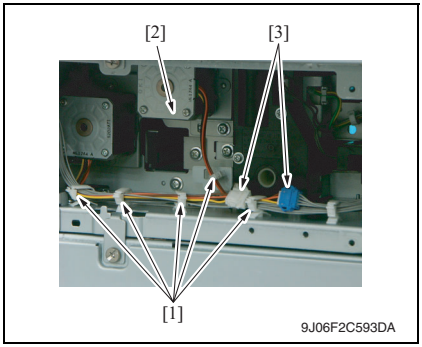

4. Remove the harness of the motor assy [2] from five wire saddles [1].
5. Disconnect two connectors [3].

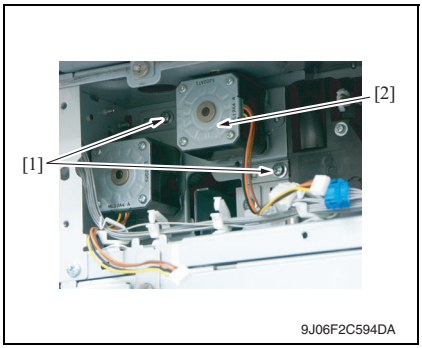

6. Remove two screws [1], and remove the motor assy [2].

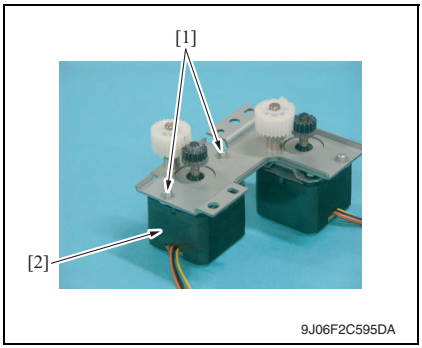

7. Remove two screws [1], and remove the tray 2 paper feed motor [2].

6.3.50 Tray 2 vertical transport motor (M2-PC)

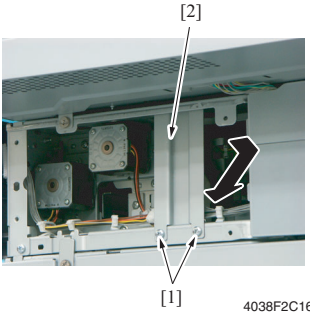

4038F2C165DA

1. Pull out the tray 2.
2. Remove the tray 2 rear right cover and the tray 2 rear left cover.

See P.89

3. Remove two screws [1], and remove the reinforcement plate [2].

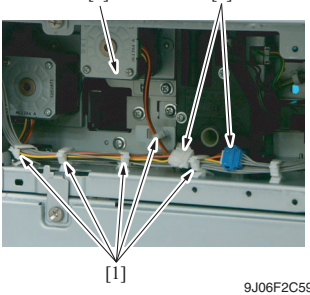

9J06F2C593DA

4. Remove the harness of the motor assy [2] from five wire saddles [1].
5. Disconnect two connectors [3].

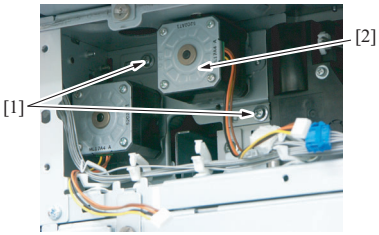

9J06F2C594DA

6. Remove two screws [1], and remove the motor assy [2].

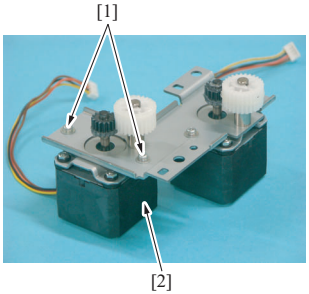

9J06F2C596DA

7. Remove two screws [1], and remove the tray 2 vertical transport motor [2].

6.3.51 IDC/registration sensor/F, IDC/registration sensor/R (SE1/SE2)

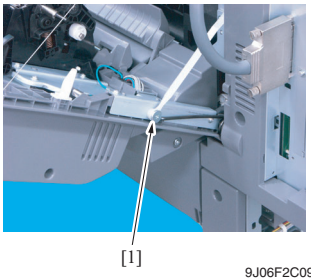

9J06F2C099DA

1. Remove the image transfer belt unit.
See P.32
2. Remove the multi bypass unit.
See P.118
3. Open the right door, and remove the shoulder screw [1].

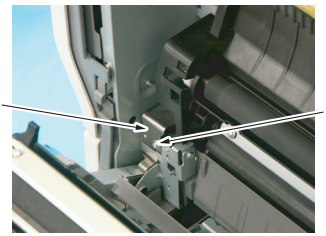

4038F2C169DA

4. Remove the screw [1], and remove the plate spring [2].

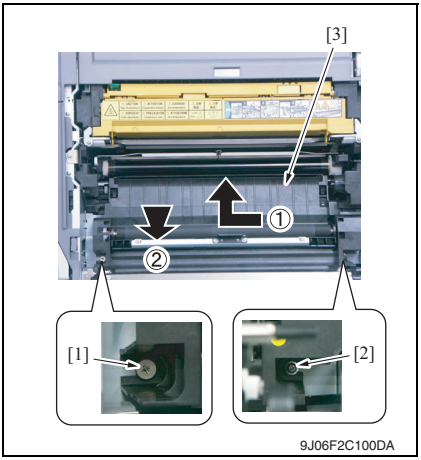

5. Remove the shoulder screw [1] and the screw [2].
6. Remove the vertical transport unit [3] in manner of the left illustration.

NOTE

- **Since multiple connectors are connected to the backside of the vertical transport assy, do not pull it by force.**

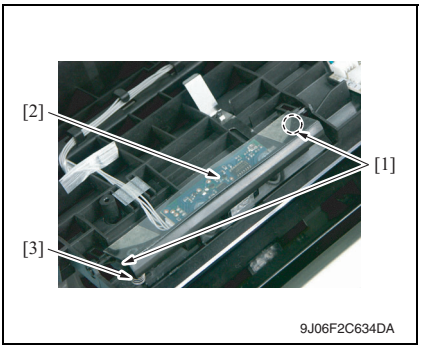

7. Remove the claws [1] of both sides, and remove the sensor cover [2].

NOTE

- **Use care not to miss the spring [3].**

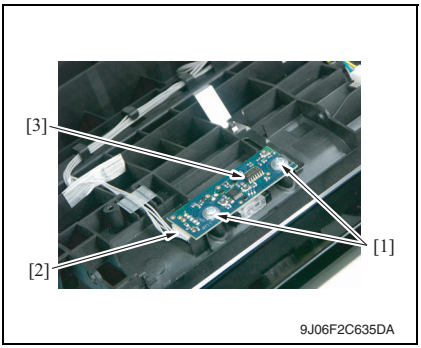

8. Remove two screws [1] and connector [2], and remove the IDC/registration sensor/F (front side) [3].

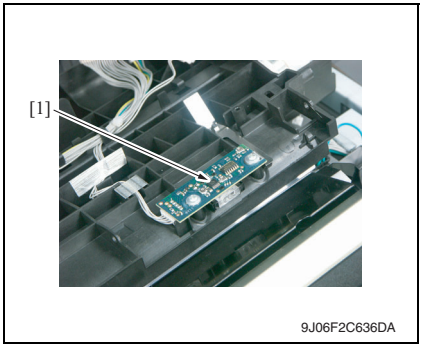

9. Repeat the step 7 and 8, and remove the IDC/registration sensor/R (rear side) [1].

6.4 Cleaning procedure

NOTE

- **The alcohol described in the cleaning procedure represents the isopropyl alcohol.**

6.4.1 PH window

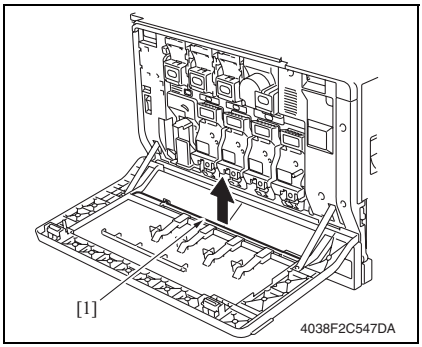

1. Open the front door.
2. Remove the PH window cleaning jig [1].

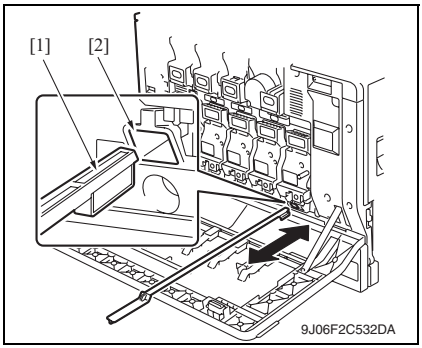

3. Insert the PH window cleaning jig [1] to the cleaning port [2] and clean it by putting the jig back and forth a couple times.

NOTE

- **Clean every PH window of CMYK.**

6.4.2 Image transfer belt unit

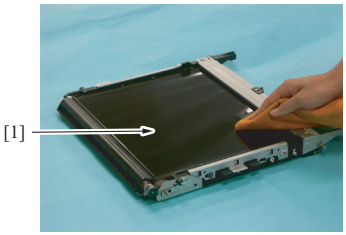

4038F2C174DA

1. Remove the image transfer belt unit. See P.32
2. Using a dried soft cloth, wipe the image transfer belt [1].

NOTE

- **If it is difficult to clean with dried soft cloth, dampen a soft cloth with a solvent.**
- **Do not wipe out with water.**
- **When solvent is used to dampen a cloth, do not use the ones other than shown below:**
  isopropyl alcohol, ethyl alcohol, PPC cleaner, Sol mix AP-7.
- **After cleaned with the solvent, make copies more than 28-piece of A3 white paper to eliminate the image noise.**

6.4.3 Tray 1 feed roller

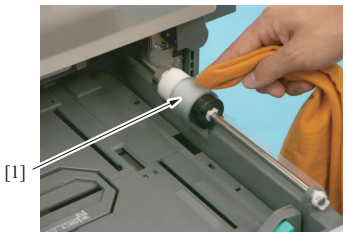

4038F2C175DA

1. Slide out the tray 1.
2. Using a soft cloth dampened with alcohol, wipe the tray 1 feed roller [1] clean of dirt.

6.4.4 Tray 1 separation roller

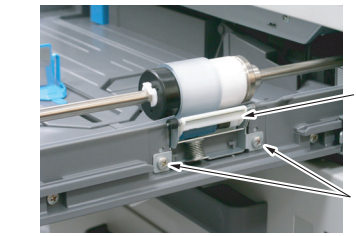

4038F2C002DB

1. Slide out the tray 1.
2. Remove two screws [1], and remove the tray 1 paper separation roller mounting bracket assy [2].

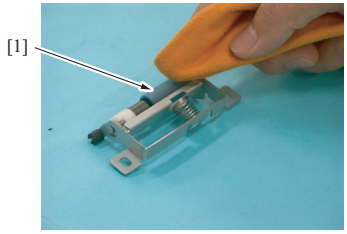

9J06F2C533DA

3. Using a soft cloth dampened with alcohol, wipe the tray 1 separation roller [1] clean of dirt.

6.4.5 Bypass tray feed roller

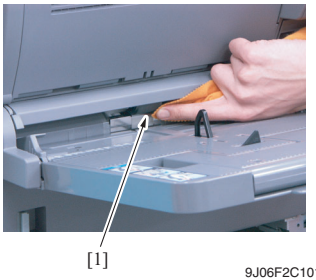

9J06F2C101DA

1. Remove the multi bypass unit.
See P.118
2. Using a soft cloth dampened with alcohol, wipe the bypass tray feed roller [1].

6.4.6 Bypass tray separation roller

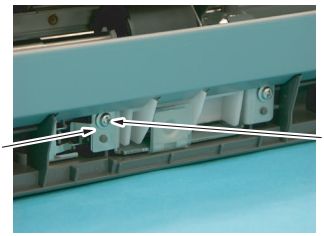

4038F2C009DA

1. Remove the multi bypass unit.
See P.118
2. Remove the screws [1], and remove the ground terminal [2].

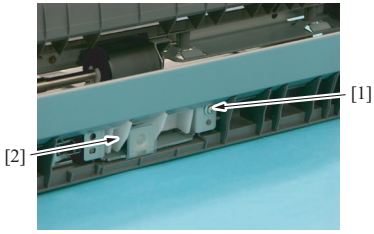

9J06F2C508DA

3. Remove the screw [1], and remove the bypass tray separation roller assy [2].

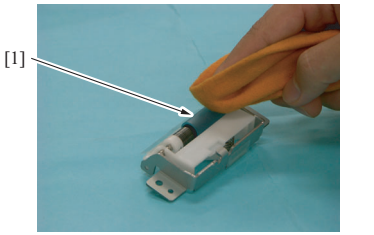

9J06F2C534DA

4. Using the soft cloth dampened with alcohol, wipe the bypass paper separation roller [1].

6.4.7 Tray 2 feed roller/tray 2 pick-up roller

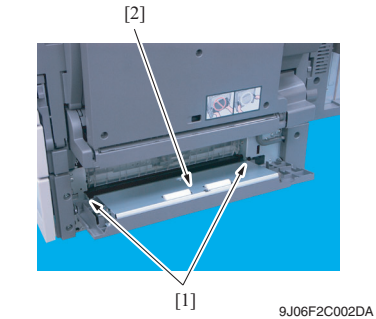

9J06F2C002DA

1. Slide out the tray 2.
2. Open the vertical transport door.
3. Remove two claws [1], and remove the vertical transport door [2].

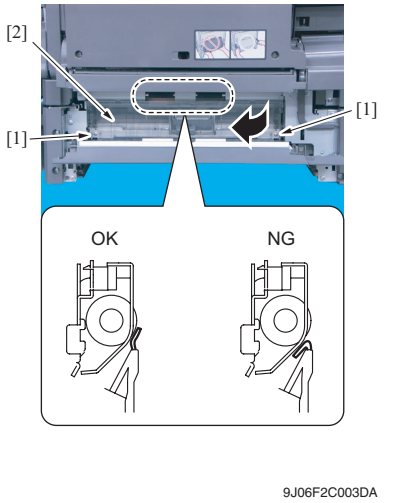

4. Remove two screws [1], and remove the jam clearing cover [2].

NOTE

- **When installing the jam clearing cover, make sure that the mylar is set to correct position.**

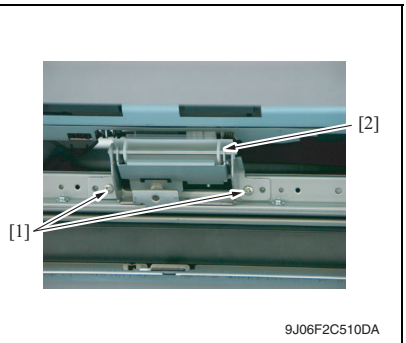

5. Remove two screws [1] and the tray 2 separation roller installation plate assy [2].

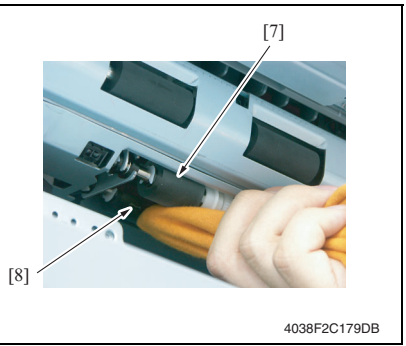

6. Using a soft cloth dampened with alcohol, wipe the tray 2 feed roller [1] and the tray 2 pick-up roller [2].

6.4.8 Tray 2 separation roller

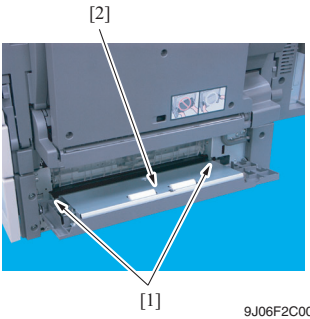

9J06F2C002DA

1. Slide out the tray 2.
2. Open the vertical transport door.
3. Remove two claws [1], and remove the vertical transport door [2].

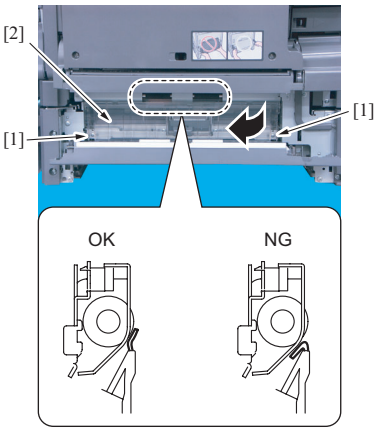

9J06F2C003DA

4. Remove two screws [1], and remove the jam clearing cover [2].

NOTE

- **When installing the jam clearing cover, make sure that the mylar is set to correct position.**

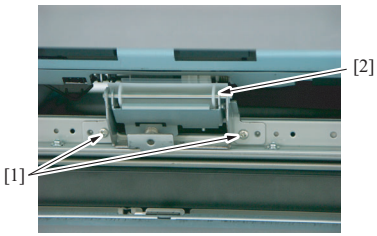

9J06F2C510DA

5. Remove two screws [1] and the tray 2 separation roller installation plate assy [2].

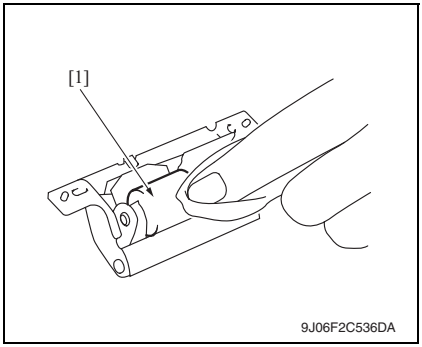

6. Using a soft cloth dampened with alcohol, wipe the tray 2 separation roller [1].

6.4.9 Tray 2 transport roller

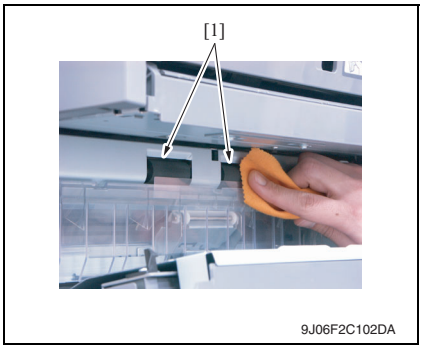

1. Open the vertical transport door.
2. Using a soft cloth dampened with alcohol, wipe the tray 2 transport roller [1].

6.4.10 Scanner rail

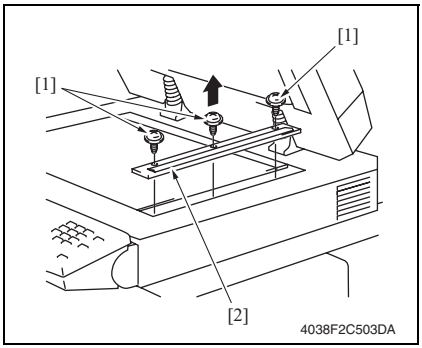

1. Remove three screws [1] and the IR upper right cover [2].

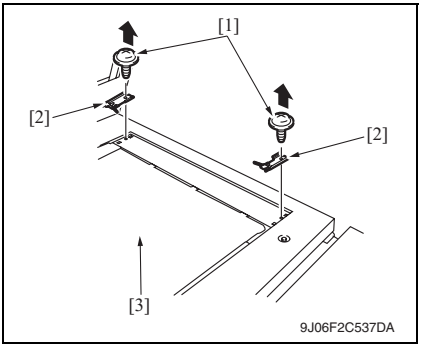

2. Remove two screws [1] and two original glass fixing brackets [2] (at the front and rear).
3. Remove the original glass [3].

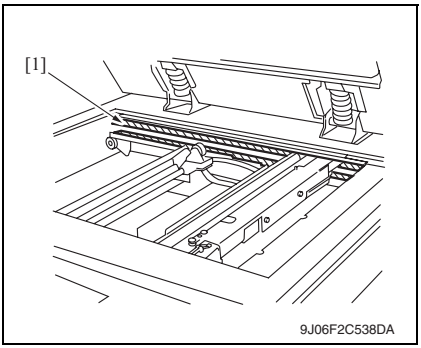

4. Using a soft cloth dampened with alcohol, wipe the scanner rails [1] clean of dirt.

NOTE

- **Apply lubricant after cleaning.**

6.4.11 Mirrors (1st/2nd/3rd)

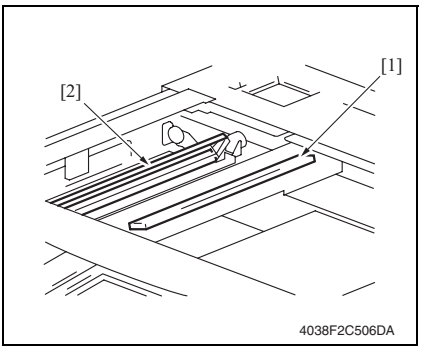

1. Remove the original glass.
See P.81
2. Using a soft cloth dampened with alcohol, wipe the mirror 1 [1] and mirror 2/3 [2].

6.4.12 Lens

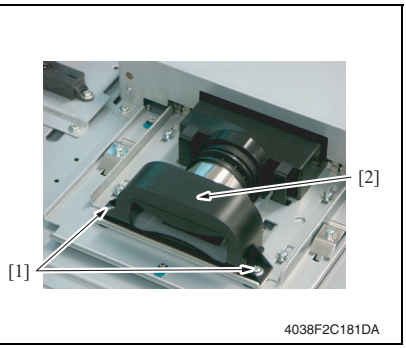

1. Remove the original glass.
See P.81
2. Remove two screws [1] and lens cover [2].

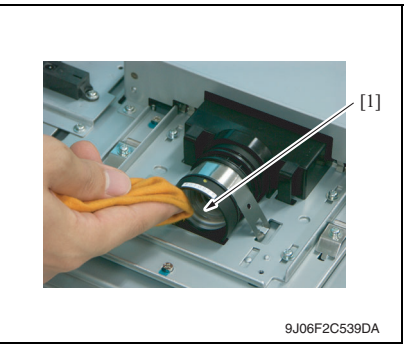

3. Using a soft cloth dampened with alcohol, wipe the lens [3] clean of dirt.

6.4.13 Original glass

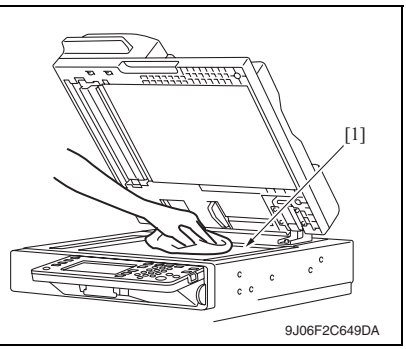

1. Using a soft cloth dampened with alcohol, wipe the original glass [1] clean of dirt.

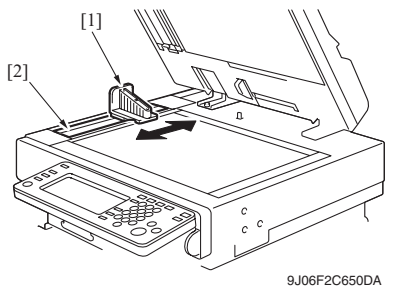

9J06F2C650DA

2. Clean the slit glass [2] with the cleaner [1].
(only when DF-608 is mounted)

6.4.14 CCD sensor

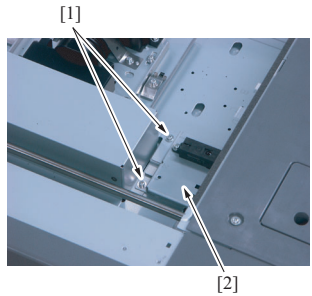

9J06F2C044DA

1. Remove the original glass.
See P.81
2. Remove two screws [1], and remove the original size detection sensor assy [2].

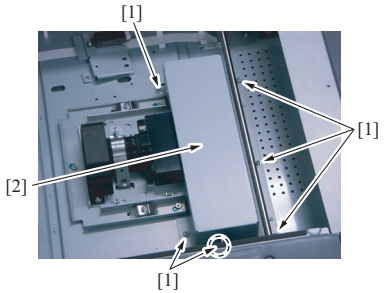

9J06F2C045DA

3. Remove six screws [1] and CCD unit protective cover [2].

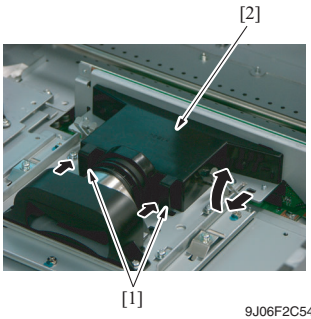

9J06F2C540DA

4. Unhook two hooks [1], and remove the lens cover [2].

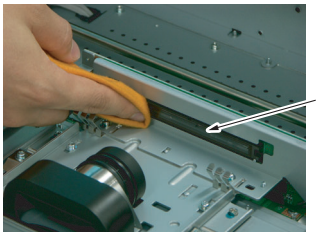

9J06F2C541DA

5. Using a soft lint free cloth dampened with alcohol, wipe the CCD sensor [1] clean of dirt.

6.5 Mount the original size detection 2 sensor (PC204)

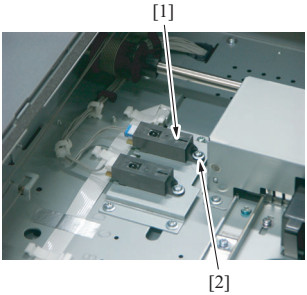

4037F2C113DB

1. Remove the original glass.
2. Using the screw [2], mount the original size detection 2 sensor (PC204) [1] and fix it.

<How to set the harness>

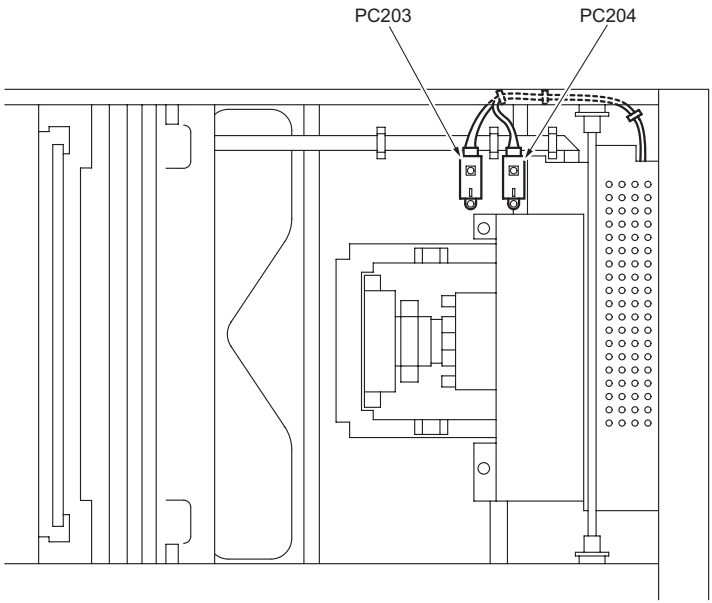

4037F2C114DB

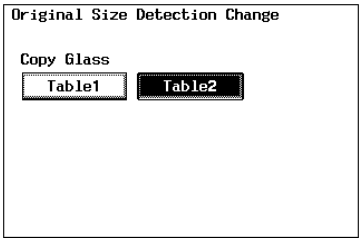

9J06F2E671DA

3. Select [Service Mode] → [System 1] → [Original Size Detection], and set the original glass to [Table2].

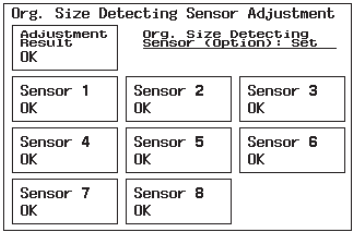

4037F2E531DA

4. Select [Service Mode] → [Machine] → [Org. Size Detecting Sensor Adj].
See P.312
5. Check to make sure that the [Org. Size Detecting Sensor (Option): Set] is displayed on the original size detection sensor adjustment screen.

6.6 Option counter

6.6.1 Installation method for the key counter

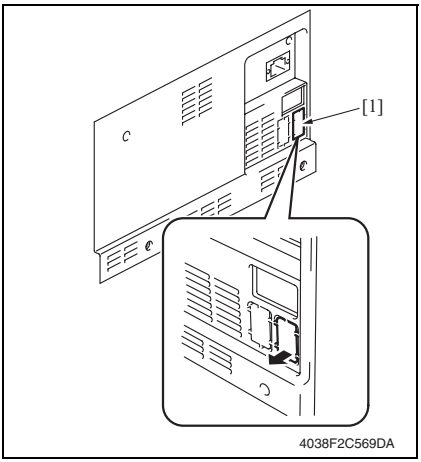

1. Cut out the knockouts [1] of the upper rear cover.
2. Remove the upper rear cover.

See P.82

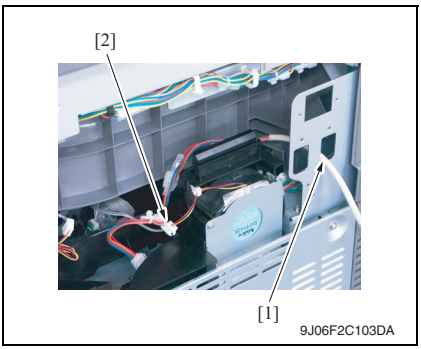

3. Pass the key counter harness [1] through the hole.
4. Mount the connector [2].

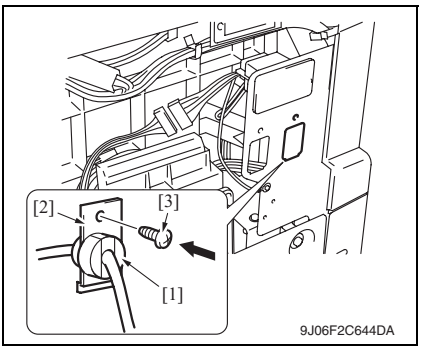

5. Secure the counter cable [1] and cable holder [2] with one screw [3].
6. Reinstall the upper rear cover.

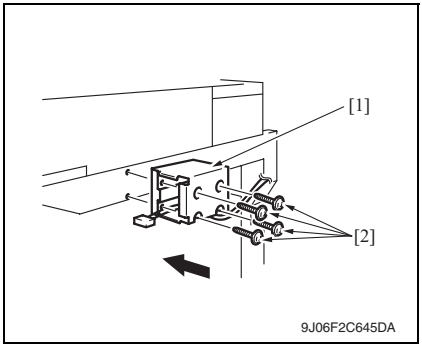

7. Using four screws [2], secure the counter mounting bracket [1].

NOTE

- **Secure the counter mounting bracket passing the connector into the bracket.**
- **Use the four long screws (9646 0418 14: M4x18) in the key counter kit to secure the counter mounting bracket.**
  When installing the key counter to the other products, use the short screws (9646 0408 14: M4x8).

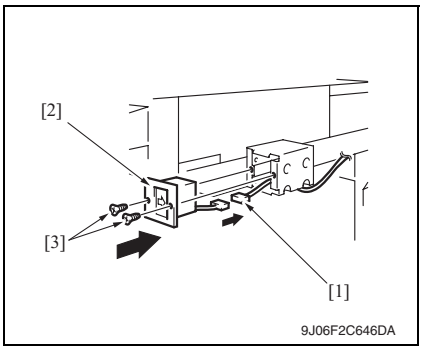

8. Connect the key counter socket connector [1].
9. Using two screws [11], secure the counter socket [2].

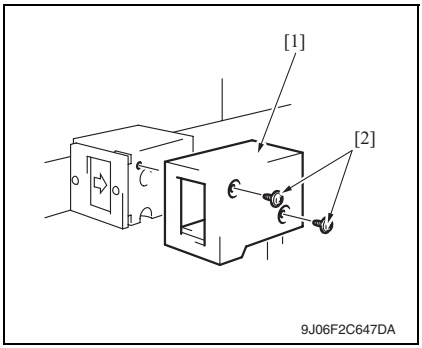

10. Using two screws [1], secure the key counter cover [2].

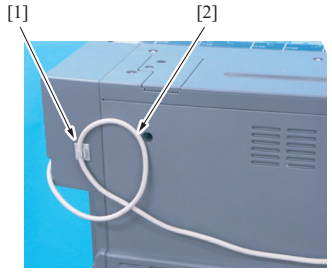

9J06F2C104DA

11. Fix the harness [2] with the cable clamp [1] as shown in the left figure.

12. Select [Service Mode] → [Billing Setting] → [Management Function Choice] → [Key Counter Only], [Vendor 1+Key Counter] or [Vendor 2+Key Counter]. Set color mode and message.

For details on setting, see “Adjustment/Setting.”
See P.391

Adjustment/Setting

7. How to use the adjustment section

- “Adjustment/Setting” contains detailed information on the adjustment items and procedures for this machine.
- Throughout this “Adjustment/Setting,” the default settings are indicated by “ ”.

Advance checks

- Before attempting to solve the customer problem, the following advance checks must be made. Check to see if:

- The power supply voltage meets the specifications.
- The power supply is properly grounded.
- The machine shares the power supply with any other machine that draws large current intermittently (e.g., elevator and air conditioner that generate electric noise).
- The installation site is environmentally appropriate: high temperature, high humidity, direct sunlight, ventilation, etc.; levelness of the installation site.
- The original has a problem that may cause a defective image.
- The density is properly selected.
- The original glass, slit glass, or related part is dirty.
- Correct paper is being used for printing.
- The units, parts, and supplies used for printing (developer, PC drum, etc.) are properly replenished and replaced when they reach the end of their useful service life.
- Toner is not running out.

⚠ CAUTION

- **To unplug the power cord of the machine before starting the service job procedures.**
- **If it is unavoidably necessary to service the machine with its power turned ON, use utmost care not to be caught in the scanner cables or gears of the exposure unit.**
- **Special care should be used when handling the fusing unit which can be extremely hot.**
- **The developing unit has a strong magnetic field. Keep watches and measuring instruments away from it.**
- **Take care not to damage the PC drum with a tool or similar device.**
- **Do not touch IC pins with bare hands.**

8. Utility Mode

8.1 Touch Panel Adjustment

Functions	• To adjust the position of the touch panel display
Use	• Make this adjustment if the touch panel is slow to respond to a pressing action. • Use during the setup procedure.
Setting/ Procedure	*1.* Press the Accessibility key. *2.* Touch [Touch Panel Adj.]. *3.* Using the tip of a pen or similar object, touch the four crosses (+) on the screen in sequence. • These crosses may be touched in any order; but be sure to touch the center of each cross. • Use care not to damage the screen surface with the tip of the pen. 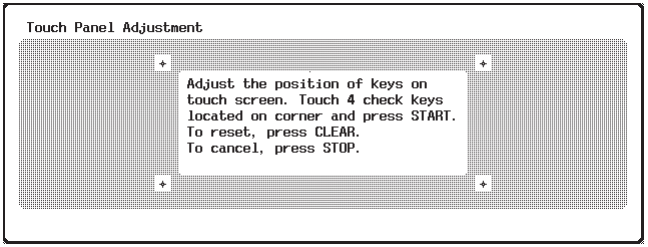 4037F3E512DA *4.* Touching all four crosses will turn the Start key ON in green. *5.* Press the Start key.

8.2 Utility Mode function tree

* The function tree is shown to comply with the format displayed on the screen.

NOTE

- **Keys displayed on screens are different depending on the setting.**
- **For displaying the keys with *, ** marks, see 224 "Administrator Security Level."** See P.292
- **For displaying the keys with *** marks, see 302 "Administrator Feature Level."** See P.387

Utility Mode					Ref. page
One-Touch Registration	Scan	Address Book	E-Mail		P.193
			FTP		P.193
			SMB		P.193
			User Box		P.193
		Group			P.193
		Program			P.194
		Subject/Text (for E-mail)	Subject		P.194
			Text		P.194
	Fax	Address Book	Abbr. Dial		P.194
			E-Mail		P.194
			User Box		P.195
			IP Address Fax Destination		P.195
			Internet Fax Address		P.195
		Group			P.195
		Program			P.195
		Subject/Text (for E-mail)	Subject		P.196
			Text		P.196
	User Box	Public/Personal User Box			P.196
		Bulletin Board User Box			P.196
		Relay User Box			P.197
User Setting	System Setting	Language Selection			P.197
		Measurement Unit Setting			P.197
		Paper Tray Setting	Auto Tray Select Setting		P.197
			Auto Tray Switch ON/OFF		P.197
			No Matching Paper in Tray Setting		P.198
			Print Lists		P.198
		Auto Color Level Adjustment			P.198
		Power Save Setting*	Low Power Mode Setting*		P.198
			Sleep Mode Setting*		P.199
		Output Setting**	Print/Fax Output Setting**	Print**	P.199
				Fax**	
			Output Tray Setting**		P.199
			Bin Setting **		P.200
		AE Level Adjustment**			P.200

Utility Mode				Ref. page
User Setting	Display Setting	Sub Screen Display ON/OFF		P.200
		Scan Basic Screen Default Seeing	Default Tab	P.200
			Program Default	P.201
			Address Book Default Index	P.201
			Address Type Symbol Display	P.201
		Fax Basic Screen Default Setting	Default Tab	P.201
			Default Program	P.201
			Address Book Default Index	P.202
			Address Type Symbol Display	P.202
			No. of Characters for Dest. Display	P.202
		Copy Screen	Copy Operating Screen	P.202
		Fax Active Screen	TX Display	P.203
			RX Display	P.203
		Copy Initial Screen Setting		P.203
		Job List Default		P.203
	Initial Setting			P.204
	Copier Setting	Auto Paper Select for Small Original		P.204
		Auto Booklet ON when Fold & Staple		P.204
		Auto Zoom for Combine/Booklet		P.205
		Sort/Group Auto Change		P.205
		Set for Incorrect AMS Direction		P.205
		Auto Magnification Selection (Platen)*		P.205
		Auto Magnification Selection (ADF)*		P.205
		Specify Default Tray when APS Off*		P.206
		Select Tray for Insert Sheet*		P.206
		Print Setting for Separate Scan		P.206
		Print Jobs During Copy Operation**		P.206
	Scanner Setting	JPEG Compression Level		P.207
		Black Compression Level		P.207
		TWAIN Lock Time		P.207
	Printer Setting	Basic Setting	PDL Setting	P.207
			Number of Sets	P.208
			Original Direction	P.208
			Spool Print Jobs in HDD before RIP	P.208
			A4/A3 ↔ LTR/LGR Auto Switch	P.208
			Banner Setting	P.208
		Paper Setting	Paper Tray	P.209
			Default Paper Size	P.209
			2-Sided Print	P.209
			Bind Direction	P.209
			Staple	P.209
			Hole-Punch	P.210

Utility Mode					Ref. page
User Setting	Printer Setting	Paper Setting	Banner Paper Tray		P.210
		PCL Setting	Font Setting		P.210
			Symbol Set		P.210
			Font Size		P.210
			Line/Page		P.211
			CR/LF Mapping		P.211
		PS Setting	PS Error Print		P.211
		Print Reports	Configuration Page		P.211
			Demo Page		
			PCL Font List		
			PS Font List		
	Change Password				P.212
	Change E-Mail Address				P.212
Administrator Setting	System Setting	Power Save	Low Power Mode Setting		P.213
			Sleep Mode Setting		P.213
			Power Save Key		P.213
			Entering Power Save Mode (Fax)		P.214
		Output Setting	Print/Fax Output Settings	Printer	P.214
				Fax	
			Output Tray Setting		P.214
			Bin Setting		P.215
			Offset Each Job Setting		P.215
		Date/Time Setting			P.215
		Daylight Savings Time Setting			P.215
		Weekly Timer Setting	Weekly Timer ON/OFF Setting		P.216
			Time Setting		P.216
			Date Setting		P.216
			Select Time for Power Save		P.216
			Password for Non-Business Hours		P.216
		Restrict User Access	Restrict Access to Saved Program Jobs		P.217
			Delete Saved Program Jobs		P.217
			Restrict Access to Job Settings	Changing Job Priority	P.217
				Deleting Other User's Jobs	P.217
				Registering and Changing Addresses	P.217
				Changing Zoom Ratio	P.218
				Changing the "From" Address	P.218
			Restrict Operation Setting	Restrict Fax Broadcasting	P.218

Utility Mode					Ref. page
Administrator Setting	System Setting	Expert Adjustment	AE Level Adjustment		P.218
			Printer Adjustment	Leading Edge Adjustment	P.219
				Centering	P.220
				Centering (Duplex 2nd Side)	P.221
				Media Adjustment	P.222
				Erase Leading Edge ***	P.222
			Finisher Adjustment	Center Staple Position	P.222
				Fold Position	
				Punch Horizontal Position	
				Punch Regist Loop Size	
			Density Adjustment	Thick Paper Image Density–Yellow	P.222
				Thick Paper Image Density–Magenta	
				Thick Paper Image Density–Cyan	
				Thick Paper Image Density–Black	
				Black Image Density	P.223
			Image Stabilization		P.223
			Pre-Detection of Lines	Detect Lines Prior to Job	P.224
				Detect & Remove During Job	P.225
			Color Registration Adjust	Color Registration Adjust (Yellow)	P.226
				Color Registration Adjust (Magenta)	
				Color Registration Adjust (Cyan)	
			Gradation Adjustment	Copy	P.227
				Printer (Gradation)	
				Printer (Resolution)	
			Scanner Adjustment ***	Leading Edge Adjustment ***	P.229
				Centering ***	P.230
				Horizontal Adjustment ***	P.231
				Vertical Adjustment ***	P.232
			ADF Adjustment ***	Centering***	P.232
				Original Stop Position***	
				Centering Auto Adjustment***	
				Auto Adj. of Stop Position***	
		List/Counter	Management List	Job Settings List	P.232
			Paper Size/Type Counter		P.233
			Meter Counter List		P.233
			Consumable Life List		P.233

Utility Mode						Ref. page
Administrator Setting	System Setting	Reset Setting	System Auto Reset			P.234
			Auto Reset			P.234
			Job Reset	When Account is changed		P.234
				When Original is set on ADF		P.234
				When NEXT JOB is selected	Staple Setting	P.235
					Original Set/ Bind Direction	P.235
					Reset Data After Job	P.235
		User Box Setting	Delete Unused User Box			P.235
			Delete Secure Print Documents			P.235
			Auto Delete Secure Documents			P.235
		Standard Size Setting***	Original Glass Original Size Detect***			P.236
			Foolscap Size Setting***			P.236
	Administra-tor/Machine Setting	Administrator Registration				P.236
		Input Machine Address				P.236
	One-Touch Registration	Scan	Address Book	E-Mail		P.236
				FTP		P.237
				SMB		P.237
				User Box		P.237
			Group			P.237
			Program			P.237
			Subject/Text (for E-mail)	Subject		P.237
				Text		P.238
		Fax	Address Book	Addr. Dial		P.238
				E-Mail		P.238
				User Box		P.238
				IP Address Fax Destination		P.238
				Internet Fax Address		P.239
			Group			P.239
			Program			P.239
			Subject/Text (for E-mail)	Subject		P.239
				Text		P.239
		User Box	Public/Personal User Box			P.240
			Bulletin Board User Box			P.240
			Relay User Box			P.240
			Annotation User Box			P.240
		One-Touch Registration List	Address Book List			P.240
			Group List			P.241
			Program List			P.241
			E-Mail Subject/Text List			P.241

Utility Mode					Ref. page
Administrator Setting	User Authentication / Account Track	General Settings			P.242
		User Authentication Setting	Administrative Setting	User Name List	P.244
				Default Function Permission	P.244
				Public User Key	P.244
			User Registration		P.245
			User Counter		P.245
		Account Track Setting	Account Track Registration		P.245
			Account Track Counter		P.245
		Print without Authentication			P.246
		Counter List			P.246
	Network Setting	TCP/IP Setting			P.246
		NetWare Setting			P.249
		http Server Setting			P.251
		FTP Setting			P.253
		SMB Setting			P.254
		AppleTalk Setting			P.256
		LDAP Setting	Enabling LDAP		P.257
			Setting Up LDAP		P.257
			Default LDAP Server Setting		P.261
		E-Mail Setting	E-Mail TX (SMTP)		P.261
			E-Mail RX (POP)		P.264
		Detail Setting	Device Setting		P.265
			Time Adjustment Setting		P.265
			Status Notification Setting	Notification Address Setting	P.266
				Notification Item Setting	P.266
				Notification Time Setting	P.266
			Total Counter Report Setting		P.266
			PING Confirmation		P.267
			SLP Setting		P.267
			LPD Setting		P.267
			Prefix/Suffix Setting	ON/OFF Setting	P.268
				Prefix/Suffix Setting	P.268
			Action for Invalid Certificate		P.268
		SNMP Setting			P.268
		Bonjour Setting			P.271
		TCP Socket Setting			P.272
		Network Fax Setting	Network Fax Function Settings	IP Address Fax	P.273
				Internet Fax	P.273
			SMTP TX Setting		P.273
			SMTP RX Setting		P.274

Utility Mode					Ref. page
Administrator Setting	Copier Setting	Auto Zoom (Platen)			P.274
		Auto Zoom (ADF)			P.274
		Select Tray when APS OFF			P.274
		Select Tray for Insert Sheet			P.275
		Print Jobs During Copy Operation			P.275
	Printer Setting	I/F Timeout			P.275
		Parallel I/F			P.275
		IEEE 1284/USB			P.275
	Fax Setting	Header Information			P.276
		Header/ Footer Position	Header Position		P.276
			To Name		P.276
			Footer Position		P.276
		Telephone Line Settings	Dialing Method		P.277
			Receive Mode		P.277
			Number of RX Call Rings		P.277
			Number of Redials		P.277
			Redial interval		P.277
	Fax Setting	Telephone Line Settings	Line Monitor Sound		P.278
			Line Monitor Sound Volume		P.278
		TX/RX Setting	Duplex Print (RX)		P.278
			Inch Paper Priority Over A4		P.278
			Print Paper Selection		P.278
		TX/RX Setting	Print Paper Size		P.279
			Incorrect User Box No. Entry		P.279
			Tray Selection for RX Print		P.279
			Min. Reduction for RX Print		P.279
			Print Separate Fax Pages		P.279
			File After Polling TX		P.280
			No. of Sets (RX)		P.280
		Function Setting	Function ON/ OFF Setting	F Code TX	P.280
				Relay RX	P.280
				Relay Print	P.281
				Destination Check Display Function	P.281
			Memory RX		P.281
			Closed Network RX		P.281
			Forward TX Setting		P.282
			Incomplete TX Hold		P.282
			PC-Fax RX Setting		P.282
			TSI User Box Setting		P.283
		PBX CN Set			P.283

Utility Mode					Ref. page
Administrator Setting	Fax Setting	Report Settings	Activity Report		P.283
			TX Report		P.283
			Sequential TX Report		P.284
			Timer Reservation TX Report		P.284
			Confidential RX Report		P.284
			Bulletin TX Report		P.284
			Relay TX Result Report		P.284
			Relay Request RX Report		P.284
			PC-FAX TX Error Report		P.285
			Broadcast Result Report		P.285
			TX Result Report Check		P.285
			Network Fax RX Error Report		P.285
			MDN Message		P.285
			DSN Message		P.286
			Receipt Mail Text		P.286
		Job Settings List			P.286
		Multi Lines Setting	Telephone Line Setting	Dialing Method	P.287
				Number of RX Call Rings	P.287
				Line Monitor Sound	P.287
			Function Setting	PC-FAX TX Setting	P.287
			Multi Lines Setting		P.288
			Sender Fax No.		P.288
		Network Fax Setting	Black Compression Level		P.288
			Internet Fax Rx Ability		P.289
			I-Fax Advanced Settings		P.289
	System Connection	OpenAPI Setting	Access Setting		P.290
			Port No.		P.290
			SSL		P.290
			Authentication		P.290
	System Connection	Call Remote Center			P.290
		Prefix/Suffix Auto Setting			P.291
	Security Setting	Administrator Password			P.291
		User Box Admin. Setting			P.291
		Administrator Security Level			P.292
		Security Details	Password Rules		P.293
			Prohibit Functions When Auth Error		P.294
			Manual Destination Input		P.294
			Print Data Capture		P.294
			Secure Document Access Method		P.295
			Restrict Fax TX		P.295

Utility Mode				Ref. page
Administrator Setting	Security Setting	Enhanced Security Mode		P.296
		HDD Setting	Check HDD Capacity	P.297
			Temporary Data Overwrite Setting	P.297
			Overwrite All Data	P.298
			HDD Lock Password	P.298
			HDD Formatting	P.299
			HDD Encryption Setting	P.299
		Management Function Setting	Each Function Setting	P.300
			Max Copy Set	P.300
			Network Function Setting	P.300
			Authentication Time Setting	P.301
		Delete Registered Stamp		P.301
Check Consumable Life				—
Banner Printing				P.301
Meter Count	Details	Print		—
		Toner Coverage		—
		Copy		—
		Print		—
		Scan/Fax		—
		Other		—

8.3 Utility Mode function setting procedure

8.3.1 Procedure

1. Press the Utility/Counter key.
2. The Utility Mode screen will appear.

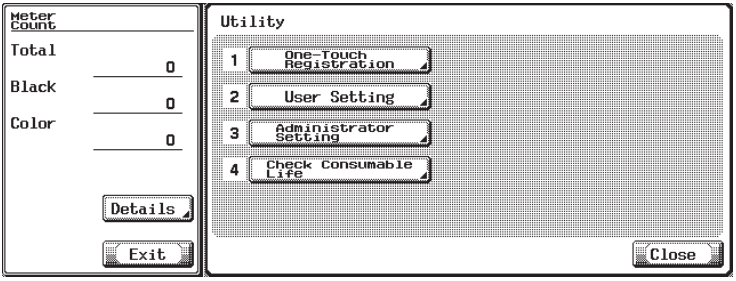

4037F3E522DA

8.3.2 Exiting

- Touch the [Close] key.

8.3.3 Changing the setting value in Utility Mode functions

- Use the [+] / [-] key to enter or change the setting value.
- Use the 10-key pad to enter the setting value.
  (To change the setting value, first press the Clear key before making an entry.)

8.4 One-Touch Registration

- It will not be displayed during the user authentication by the external server or MFP.

8.4.1 Scan

- It will not be displayed when the authentication device is set to “Set” by the following setting.
  [Service Mode] → [Billing Setting] → [Management Function Choice]

A. Address Book

(1) E-Mail

Functions Use	• To register/change e-mail address to send scanned data.
Setting/ Procedure	• A new address can be registered by touching [New]. • Select any displayed address to check, edit or delete the setting.

(2) FTP

Functions Use	• To register/change FTP address to send scanned data.
Setting/ Procedure	• A new address can be registered by touching [New]. • Select any displayed address to check, edit or delete the setting.

(3) SMB

Functions Use	• To register/change SMB address to send scanned data.
Setting/ Procedure	• A new address can be registered by touching [New]. • Select any displayed address to check, edit or delete the setting.

(4) User Box

Functions Use	• To register/change the Box address when storing the scanned data in the box in the hard disk in the main unit.
Setting/ Procedure	• A new address can be registered by touching [New]. • Select any displayed address to check, edit or delete the setting. • At least one User Box must be registered for registering a Box address.

B. Group

Functions Use	• To register/change a group to send scanned data simultaneously.
Setting/ Procedure	• A new address can be registered by touching [New]. • Select any displayed group to check, edit or delete them. • At least one address must be registered for registering a new group.

C. Program

Functions Use	• To register/change the scan program.
Setting/ Procedure	• Select any program No. to check, edit, or delete the setting.

D. Subject/Text (for E-mail)
(1) Subject

Functions Use	• To register the e-mail subject when transmitting the scanned data.
Setting/ Procedure	• A new address can be registered by touching [New]. • Select any displayed address to detail check, edit or delete the setting. • The subject can be set as default by selecting the subject displayed on the screen and pressing [Set as Default].

(2) Text

Functions Use	• To register the e-mail message when transmitting the scanned data.
Setting/ Procedure	• A new address can be registered by touching [New]. • Select any displayed address to detail check or delete the setting. • The text can be set as default by selecting the text displayed on the screen and pressing [Set as Default].

8.4.2 Fax

- Settings are available only when the optional fax kit (FK-502) is mounted.

A. Address Book
(1) Abbr. Dial

Functions Use	• To register/change the fax numbers.
Setting/ Procedure	• A new address can be registered by touching [New]. • Select any displayed address to check, edit or delete the setting.

(2) E-Mail

Functions Use	• To register/change the e-mail address when transmitting the fax data.
Setting/ Procedure	• A new address can be registered by touching [New]. • Select any displayed address to check, edit or delete the setting.

(3) User Box

Functions Use	• To register/change the box address when storing the fax original in the box of the hard disk in the machine.
Setting/ Procedure	• A new address can be registered by touching [New]. • Select any displayed address to check, edit or delete the setting. • At least one user box should be registered in order to register the Box address.

(4) IP Address Destination

- Setting will be available only when [IP Address FAX] is set to “ON” in the following settings.
  [Administrator Setting] → [Network Setting] → [Network Fax Setting] → [Network Fax Function Settings]

Functions Use	• To register/change the IP address fax destination when transmitting the IP address fax data.
Setting/ Procedure	• A new address can be registered by touching [New]. • Select any displayed address to check, change or delete the setting.

(5) Internet Fax Address

- Setting will be available only when [Internet FAX] is set to “ON” in the following settings.
  [Administrator Setting] → [Network Setting] → [Network Fax Setting] → [Network Fax Function Settings]

Functions Use	• To register/change the Internet fax address when transmitting the internet fax data.
Setting/ Procedure	• A new address can be registered by touching [New]. • Select any displayed address to check, change or delete the setting.

B. Group

Functions Use	• To register/change a group of addresses to send fax data simultaneously.
Setting/ Procedure	• A new group can be registered by touching [New]. • Select any displayed group to check, edit or delete the setting. • At least one address should be registered in order to register the group.

C. Program

Functions Use	• To register/change the fax program.
Setting/ Procedure	• Select any program No. to check, edit or delete the setting.

D. Subject/Text (for E-mail)

(1) Subject

Functions	• To register the e-mail subject when transmitting the fax original.
Use	
Setting/ Procedure	• A new subject can be registered by touching [New]. • Select any displayed subject to detail check, edit or delete the setting. • The subject can be set as default by selecting the subject displayed on the screen and pressing [Set as Default].

(2) Text

Functions	• To register the e-mail message when transmitting the fax original.
Use	
Setting/ Procedure	• A new message can be registered by touching [New]. • Select any displayed message to detail check or delete the setting. • The subject can be set as default by selecting the text displayed on the screen and pressing [Set as Default].

8.4.3 User Box

- It will not be displayed when the authentication device is set to “Set” by the following setting.
  [Service Mode] → [Billing Setting] → [Management Function Choice]

A. Public/Personal User Box

Functions	• To register/change the box for storing text data in the hard disk of the machine.
Use	• Shared or personal box can be registered according to its intended use.
Setting/ Procedure	• A new box can be registered by touching [New]. • Select any displayed box to change or delete it.

B. Bulletin Board User Box

- It will be displayed only when the optional fax kit (FK-502) is mounted.
- It will not be displayed during user authentication if the fax operation is set to “Restrict” by the function restriction.
- It will not be displayed when the following setting is set to “ON”.
  [Administrator Setting] → [System Connection] → [Prefix Suffix Auto Setting]

Functions	• To register/change the bulletin board user box.
Use	
Setting/ Procedure	• A new box can be registered by touching [New]. • Select any displayed box to change or delete it.

C. Relay User Box

- It will be displayed only when the optional FAX kit (FK-502) is mounted.
- It will not be displayed during User Authentication if the FAX control is set to “Restrict” by the function restriction.
- It will not be displayed when the following setting is set to “ON”.
  [Administrator Setting] → [System Connection] → [Prefix Suffix Auto Setting]

Functions	• To register/change the Relay User Box.
Use	
Setting/ Procedure	• A new box can be registered by touching [New]. • Select any displayed box to change or delete it.

8.5 User Setting

8.5.1 System Setting

A. Language Selection

Functions	• To select the language on the LCD display.
Use	• To change the language on the control panel to another language.
Setting/ Procedure	• The language options depend on the marketing area selected in [Marketing Area] available from [System 1] under Service Mode.

B. Measurement Unit Setting

Functions	• To select the unit displayed on the LCD display.
Use	• To change the unit displayed on the control panel.
Setting/ Procedure	• The default setting varies depending on the marketing area mm (Numerical Value) inch (Numerical Value) inch (Fraction)

C. Paper Tray Setting

- It will not be displayed when the following setting shows that vendor 1 is mounted.
  [Service Mode] → [Billing Setting] → [Management Function Choice]

(1) Auto Tray Select Setting

Functions	• To set the tray for automatic selection when APS is being set. • To establish the priority for switching the Tray when ATS is being set.
Use	• To specify the tray to be used when APS is being set. • To establish the priority of the Tray when ATS is being set.
Setting/ Procedure	• Select the tray on the [Auto Tray Select] screen. • Set the priority on the [Tray Priority] screen.

(2) Auto Tray Switch ON/OFF

Functions	• To set whether to automatically switch to another tray with same size paper when the paper feed tray runs out of paper during printing.
Use	• To switch the paper feed tray automatically.
Setting/ Procedure	• The default setting is Restrict. Allow “Restrict”

(3) No Matching Paper in Tray Setting

Functions Use	• To set whether to switch to another tray automatically when the specified tray runs out of paper during printing. Stop Printing (Tray Fixed) : It stops printing when the specified tray runs out of paper. Switch Trays (Tray Priority): To switch to another tray with the specified paper and print when the tray is out of paper
Setting/ Procedure	• The default setting is Stop Printing (Tray Fixed). "Stop Printing (Tray Fixed)" Switch Trays (Tray Priority)

(4) Print Lists

- It will not be displayed when the following setting shows that authentication device or the vendor is mounted.
  [Service Mode] → [Billing Setting] → [Management Function Choice]
  (It will be displayed when the key counter is mounted.)

Functions Use	• To set the paper feed tray for output the list for the meter count or the unit check. • It sets the simplex/duplex printing of the output for the sales counter or the unit check list. (only when the automatic duplex unit is mounted.)
Setting/ Procedure	<Paper tray> • The default setting is Tray 1. <Simplex/Duplex> • The default setting is 1-Sided.

D. Auto Color Level Adjustment

- It will not be displayed when the following setting shows that vendor 1 is mounted.
  [Service Mode] → [Billing Setting] → [Management Function Choice]

Functions	• To set the criterion level to discriminate between a colored original and a black-and-white original in the auto color mode
Use	• To change the criterion level for the partly colored image to be taken as a black-and-white original
Setting/ Procedure	• Five levels are available to choose from and the default setting is 3. Black Standard Full Color 1 2 "3" 4 5

E. Power Save

- It will be displayed only when the following setting is set to "Level 1".
  [Administrator Setting] → [Security Setting] → [Administrator Security Level]
- It will not be displayed when the following setting shows that the vendor 1 is mounted.

(1) Low Power Mode Setting

Functions	• To set the time until low power starts operating after the last key operation has been completed. • Low power: To turn LED and LCD OFF, and lower the power consumption.
Use	• To change the time until low power starts.
Setting/ Procedure	• Use the 10-key pad for setting. • The default setting is 15 min. "15 min." (10 to 240)

(2) Sleep Mode Setting

Functions	• To set the time until sleep mode starts operating after the last key operation has been completed. • Turn all lines OFF except 5 V line for control. • “OFF” will only be displayed when [No Sleep] in Service Mode is set.
Use	• To change the time until the sleep mode starts.
Setting/ Procedure	• Use the 10-key pad for setting. • The default setting is 30 min. “30 min.” (15 to 240) / OFF

F. Output Setting

- It will be displayed only when the following setting is set to “Level 2”.
  [Administrator Setting] → [Security Setting] → [Administrator Security Level]
- It will not be displayed when the following setting shows that authentication device or the vendor is mounted.
  [Service Mode] → [Billing Setting] → [Management Function Choice]
  (It will be displayed when the key counter is mounted.)

(1) Print/Fax Output Settings

Functions	• To set the timing for printing for the PC print job or fax received.
Use	Batch Print : Starts printing when all data are received Page Print : Starts printing every time data for each page are received
Setting/ Procedure	<Printer> • The default setting is Page Print. <Fax> • The default setting is Batch Print. **NOTE** • **[FAX] will be displayed only when the optional fax kit (FK-502) is mounted.**

(2) Output Tray Setting

- It will be displayed only when the optional finisher FS-514 is mounted.

Functions	• To set the priority output tray for each application (Copy print, Printer, Fax and Print Reports).
Use	• To change the output tray according to the application.
Setting/ Procedure	• The default settings are as follows. Copy : Tray 1 (Tray 3: When [Bin Setting] is enabled.) Print : Tray 1 Report Output : Tray 2 (Tray 3: When the optional OT-601 is mounted./When [Bin Setting] is enabled.) Fax : Tray 2 (Tray 3: When the optional OT-601 is mounted./When [Bin Setting] is enabled.)

(3) Bin Setting

- It will be displayed only when the optional mailbin kit MT-501 is mounted.

Functions	• Assign the first exit tray (tray 1) of the finisher to the mailbin 5, and the second exit tray (tray 2) to the mailbin 6. • The second exit tray (tray 2) can be assigned when the optional exit tray OT-601 is mounted.
Use	• Use when assigning the first and the second exit tray of the finisher to the mailbins.
Setting/ Procedure	• The default setting is Disable. Enable “Disable”

G. AE Level Adjustment

- It will be displayed only when the following setting is set to “Level 2”.
  [Administrator Setting] → [Security Setting] → [Administrator Security Level]
- It will not be displayed when the following setting shows that authentication device or the vendor is mounted.
  [Service Mode] → [Billing Setting] → [Management Function Choice]
  (It will be displayed when the key counter is mounted.)

Functions	• To set the default setting for AE (Auto Exposure) The larger the value becomes the more emphasized the background will be.
Use	To make the background level foggier: Increase the setting value To make the background level less foggy: Decrease the setting value
Setting/ Procedure	• The default setting is 2. “2” (0 to 4)

8.5.2 Display Setting

A. Sub Screen Display ON/OFF

Functions	• To set the sub screen display on the control panel.
Use	• To change the sub screen display. Setting Value : An illustration of the selected key will be displayed Job List : The list of job which are being executed will be displayed
Setting/ Procedure	• The default setting is Setting Value. “Setting Value” Job List

B. Scan Basic Screen Default Seeing

- It will not be displayed when the following setting shows that authentication device is mounted.
  [Service Mode] → [Billing Setting] → [Management Function Choice]

(1) Default Tab

Functions	• To set the basic screen display in scanner mode.
Use	• To change the basic screen display in scanner mode.
Setting/ Procedure	• The default setting is Program. “Program” Group Address Book Direct Input

(2) Program Default

Functions	• To set the default display for the program screen during scanner mode.
Use	• To keep the default display on the program screen which frequently changes during scanner mode
Setting/ Procedure	• The default setting is PAGE 1. Temporary One-Touch/ “PAGE1” to PAGE27

(3) Address Book Default Index

Functions	• To set the default display for the address book screen during scanner mode.
Use	• To keep the default display instead of search string on the address book which frequently changes during scanner mode.
Setting/ Procedure	• The default setting is Main. “Main” /ABC to WXYZ / etc

(4) Address Type Symbol Display

Functions	• To set whether to display the address type symbol on each address key when selecting the address to transmit scanned data.
Use	• To cancel displaying the address type symbol on the address key.
Setting/ Procedure	• The default setting is ON. “ON” OFF

C. Fax Basic Screen Default Setting

- It will be displayed only when the optional fax kit (FK-502) is mounted.

(1) Default Tab

Functions	• To set the basic screen display during fax mode.
Use	• To change the basic screen display during fax mode.
Setting/ Procedure	• The default setting is Program. “Program” Group Address Book Direct Input

(2) Default Program

Functions	• To set the default display for the program screen during fax mode.
Use	• To keep the default display on the program screen which frequently changes during fax mode.
Setting/ Procedure	• The default setting is PAGE 1. Temporary One-Touch / “PAGE1” to PAGE27

(3) Address Book Default Index

Functions	• To set the default display for abbreviation/address screen during fax mode.
Use	• To keep the default display instead of abbreviations/address search string which frequently changes during fax mode.
Setting/ Procedure	• The default setting is Main. "Main" / ABC to WXYZ / etc

(4) Address Type Symbol Display

Functions	• To set whether to display the address type symbol on each address key when selecting the address to transmit fax.
Use	• To cancel displaying the address type symbol on each address key.
Setting/ Procedure	• The default setting is ON. "ON" OFF

(5) No. of Characters for Dest. Display

Functions	• To set the number of characters for the address displayed on the address key when selecting the address to transmit fax.
Use	• To display the whole address which consists of over fifteen characters.
Setting/ Procedure	• The default setting is 14 char. "14 char." 24 char.

D. Copy Screen

- It will not be displayed when the following setting shows that key counter, vendor, or authentication device is mounted.
  [Service Mode] → [Billing Setting] → [Management Function Choice]

(1) Copy Operating Screen

Functions	• To set the display on the control panel screen during printing.
Use	• To display the screen to indicate printing when printing is being carried out. ON : The screen shows that the printing is being carried out. The job can be reserved with [Program Next Job]. OFF: The screen does not indicate the printing being carried out. The normal copy setting screen will be displayed. The copy reservation is available.
Setting/ Procedure	• The default setting is OFF. ON "OFF"

E. Fax Active Screen

- It will be displayed only when the optional fax kit (FK-502) is mounted.
- It will not be displayed when the following setting shows that key counter, vendor, or authentication device is mounted.
  [Service Mode] → [Billing Setting] → [Management Function Choice]

(1) TX Display

Functions	• To set the screen display for the control panel when transmitting fax.
Use	• To display [Sending] on the screen when transmitting fax.
Setting/ Procedure	• The default setting is OFF. ON "OFF"

(2) RX Display

Functions	• To set the screen display on the control panel when receiving fax.
Use	• To display [Receiving] on the screen when receiving the fax.
Setting/ Procedure	• The default setting is OFF. ON "OFF"

F. Copy Initial Screen Setting

Functions	• To select the initial screen when selecting the copy function.
Use	• To switch the initial screen to the quick screen (All basic copy settings can be done at the same time on the single screen) when selecting the copy function. Type 1: Normal initial screen Type 2: Quick screen
Setting/ Procedure	• The default setting is TYPE1. "TYPE1" TYPE2

G. Job List Default

Functions	• To set the displayed screen in default when pressing [Job List].
Use	• To change the displayed screen in default when pressing [Job List]. Current print jobs : [Current Jobs] screen is displayed. Print Job History : [Job History] screen is displayed.
Setting/ Procedure	• The default setting is Current Print Jobs. "Current Print Jobs" Print Job History

8.5.3 Initial Setting

- It will not be displayed when the following setting shows that authentication device or vendor is mounted.
  [Service Mode] → [Billing Setting] → [Management Function Choice]

Functions	• To register the default setting for the copy mode function, the scanner mode function, and the fax mode function. * The machine is initialized at the following timings: • The main power switch is turned ON. • Panel is reset. • In an Interrupt mode. • Auto Reset • The password entry screen for account track is changed.
Use	• To change the Initial mode setting to meet the user's need.
Setting/ Procedure	<Current Setting> • To register the copy mode, scanner mode, or fax mode set on the panel. • Carry out this setting after the necessary setting for each mode. <Factory Default> • Mode set prior to the shipping. • The corresponding setting will be the one which has been set prior to the shipping by carrying out this setting from each mode screen.

8.5.4 Copier Setting

A. Auto Paper Select for Small Original

Functions	• To make the copy setting when the paper is undetectably small, or no original is being set.
Use	• To copy the original such as business cards with which the original detection is not effective. Copy on Small Size : Copies on A5 paper. Copy on A4/Letter : Copies on A4 or Letter (8 $^1/_2$ x 11) size paper. Prohibit Copy : Does not copy since the original size cannot be detected. paper feed tray needs to be selected prior to pressing the Start key.
Setting/ Procedure	• The default setting is Prohibit Copy. Copy on Small Size Copy on A4/Letter "Prohibit Copy"

B. Auto Booklet ON when Fold & Staple

Functions	• To set whether to set the auto booklet when fold & staple is selected.
Use	• To cancel setting the auto booklet when fold & staple is selected.
Setting/ Procedure	• The default setting is Auto Select Booklet. "Auto Select Booklet" OFF

C. Auto Zoom for Combine/Booklet

Functions	• To set whether to select the appropriate magnification when combine or booklet is selected during auto paper select.
Use	• To cancel selecting the appropriate magnification when combine or booklet is selected during auto paper select.
Setting/ Procedure	• The default setting is Auto Display Zoom Ratio. "Auto Display Zoom Ratio" OFF

D. Sort/Group Auto Change

Functions	• To set whether to automatically switch sort/group according to the number of originals and the copies.
Use	• To cancel the function to automatically sort two originals or more when they are set to ADF.
Setting/ Procedure	• The default setting is ON. "ON" OFF

⚠1 E. Set for Incorrect AMS Direction

Functions	• To set whether to print when the original is set in different direction from the set paper during auto zoom select.
Use	• To display alarm when original is set in different direction from paper and to cancel the job during auto zoom select. Print : To print according to the selected direction and size of paper Delete Job : To display alarm and cancel the job
Setting/ Procedure	• The default setting is Print. "Print" Delete Job

F. Auto Magnification Selection (Platen)

Functions	• To set whether to function the auto magnification when the feed tray is selected with document set on the original glass (excepting at automatic paper selection mode.)
Use	• To function the auto magnification when the Tray is selected.
Setting/ Procedure	• The default setting is OFF. ON "OFF"

G. Auto Magnification Selection (ADF)

Functions	• To set whether to function the auto magnification when the feed tray is selected with document set on the ADF (excepting at automatic paper selection mode.)
Use	• To function the auto magnification when the feed tray is selected.
Setting/ Procedure	• The default setting is ON. "ON" OFF

H. Specify Default Tray when APS Off

Functions	• To set the tray to be used when APS is cancelled.
Use	• To set the tray for the initial setting when APS is cancelled.
Setting/ Procedure	• The default setting is Tray (Tray 1) Before APS OFF. "Tray Before APS ON" Default Tray

I. Select Tray for Insert Sheet

Functions	• To select the default setting of the tray for cover sheet paper.
Use	
Setting/ Procedure	• The default setting is Tray 2.

1 J. Print Setting for Separate Scan

Functions	• To set the output mode at Separate Scan setting.
Use	• To print all at once after reading all data. Auto Print : Print consecutively during the read operation. Batch print : Print all at once after reading all data. Copy setting can be changed after the read operation.
Setting/ Procedure	• The default setting is Auto Print. "Auto Print" Batch Print

K. Print Jobs During Copy Operation

Functions	• To set whether to accept the printing job for print data or fax data during copy operation.
Use	• To refuse print data or fax data during copy operation. Accept : Receives the print data or fax data to print. Receive Only : Print data or fax data will be printed when the copy operation is finished.
Setting/ Procedure	• The default setting is Accept. "Accept" Receive Only

8.5.5 Scanner Setting

A. JPEG Compression Level

Functions	• To set the JPEG compression method when scanning with JPEG while in scanner mode.
Use	• To change the compression rate when JPEG scanning. High Quality : Lowers the compression rate and puts priority in quality while scanning. Standard : Compression rate and quality are normally balanced while scanning. High Compression: Makes the compression rate higher and puts priority in lowering the data volume while scanning.
Setting/ Procedure	• The default setting is Standard. High Quality "Standard" High Compression

B. Black Compression Level

- It will not be displayed when the optional image controller IC-406 is mounted.

Functions	• To set the monochrome compression method for scanning in the monochrome mode while in scanner mode.
Use	• To be used when changing the monochrome mode while in scanner mode.
Setting/ Procedure	• The default setting is MMR. MH "MMR"

C. TWAIN Lock Time

- It will not be displayed when the optional image controller IC-406 is mounted.

Functions	• To set the period of time for unlocking the operation panel while in TWAIN scanning.
Use	
Setting/ Procedure	• The default setting is 120 sec. 120 sec. (30 to 300 sec.)

8.5.6 Printer Setting

- It will not be displayed when the optional image controller IC-406 is mounted.

A. Basic Setting

(1) PDL Setting

Functions	• To set the PDL (Page Description Language) for PC printing.
Use	• To fix the PDL as necessary. It usually switches automatically.
Setting/ Procedure	• The default setting is Auto. "Auto" PCL PS

(2) Number of Sets

Functions	• To set the number to be copied when not specified by the printer driver during PC printing.
Use	• To use when the number cannot be specified by the printer driver during printing from Windows DOS, etc.
Setting/ Procedure	• The default setting is 1. "1" (1 to 999)

(3) Original Direction

Functions Use	• To set the default setting for the direction of the original during PC printing.
Setting/ Procedure	• The default setting is Portrait. "Portrait" Landscape

(4) Spool Print Jobs in HDD before RIP

Functions Use	• To set whether to store the print data to HDD when receiving the next job during RIP process of the current job.
Setting/ Procedure	• The default setting is ON "ON" "OFF"

(5) A4/A3 ↔ LTR/LGR Auto Switch

Functions	• To set whether to switch between A4 and Letter (8 $^1/_2$ x 11) size paper, and A3 and Ledger (11 x 17) size paper in reading.
Use	• To output Letter (8 $^1/_2$ x 11) size document to A4 size, and Ledger (11 x 17) size document to A3 size. • To output A4 size document to Letter (8 $^1/_2$ x 11) size, and A3 size document to Ledger (11 x 17) size. **NOTE** • **When switching the size, the image will be printed in the same magnification.** • **The image will not be reduced when there is image deficiency.**
Setting/ Procedure	• The default setting is OFF. ON "OFF"

(6) Banner Setting

Functions	• To set whether or not to print on the banner (front cover) page.
Use	• To use when the banner (front cover) page is to be printed.
Setting/ Procedure	• The default setting is OFF. ON "OFF"

B. Paper Setting

(1) Paper Tray

Functions	• To set the paper feed tray when not specified by the printer driver during PC printing.
Use	• To use when paper feed tray cannot be specified by the printer driver when printing from Windows DOS, etc.
Setting/ Procedure	• The default setting is Auto.

(2) Default Paper Size

Functions	• To set the paper size when not specified by the printer diver during printing.
Use	• To use when the paper size cannot be specified by the printer driver during printing from Windows DOS, etc.

(3) 2-Sided Print

Functions	• To set whether to carry out duplex print during PC printing when not specified by the printer driver.
Use	• To use when 2-sided printing cannot be specified by the printer driver while printing by Windows DOS, etc.
Setting/ Procedure	• The default setting is OFF. ON “OFF”

(4) Bind Direction

Functions	• To set the binding direction during duplex printing when not specified by the printer driver during PC printing.
Use	• To use when binding direction cannot be specified by the printer driver during printing by Windows DOS, etc.
Setting/ Procedure	• The default setting is Left Bind. Top Bind “Left Bind” Right Bind

(5) Staple

Functions	• To set whether to staple or not when not specified by the printer driver during PC printing.
Use	• To use hen staple is not specified by the printer driver during printing by the Windows DOS, etc.
Setting/ Procedure	• The default setting is OFF. 1 Position 2 Positions “OFF”

(6) Hole-Punch

Functions	• To select whether to make punch-holes or not when not specified by the printer driver during PC printing.
Use	• To use when the printer driver cannot specify punching during printing from Windows DOS, etc.
Setting/ Procedure	• The default setting is OFF. ON "OFF"

(7) Banner Paper Tray

Functions	• To set the feed tray for printing on the banner (front cover) page.
Use	• To set the feed tray for printing on the banner (front cover) page.
Setting/ Procedure	• The default setting is Auto.

C. PCL Setting

(1) Font Setting

Functions	• To set the font when not specified by the printer driver during PC printing.
Use	• To use when the printer driver cannot specify the font during printing from Windows DOS, etc. • It can be selected from the internal font (Internal) or the download font (disk or soft).
Setting/ Procedure	• The default setting is Courier. *1.* When selecting from the Internal font, touch [Internal], and select the one from the displayed font list. *2.* When using the download font, select [Disk] or [Soft], and select the font using the font #.

(2) Symbol Set

Functions	• To set the font symbol set when not specified by the printer driver during PC printing.
Use	• To use when the font symbol set cannot be specified by the printer driver during printing from Windows DOS, etc.
Setting/ Procedure	• The default setting is Roman-8 or PC8, Code Page 437.

(3) Font Size

Functions	• To set the font size when not specified by the printer driver during PC printing.
Use	• To set the font size when it cannot be specified by the printer driver during printing from Windows DOS, etc. • To set scalable font (: Point) and bitmap font (: Pitch) respectively.
Setting/ Procedure	• The default setting is Scalable Font : 12.00 points Bitmap Font : 10.00 pitch

(4) Line/Page

Functions	• To set the number of lines per page for printing the text data.
Use	• To change the number of lines per page for printing the text data.
Setting/ Procedure	• Default setting value differs depending on the values by the following two different settings. [Utility] → [User Setting] → [Printer Setting] → [Basic Setting] → [Original Direction] [Utility] → [User Setting] → [Printer Setting] → [Paper Setting] → [Default Paper Size] "60 or 64 lines" (5 to 128)

(5) CR/LF Mapping

Functions	• To set the mode for replacing data when printing the text data.
Use	• To change the mode for replacing data when printing the text data. Mode 1 : Replacing CR with CR-LF Mode 2 : Replacing LF with CR-LF Mode 3 : Replacing with CR-LF OFF : Does not replace
Setting/ Procedure	• The default setting is OFF. Mode 1 Mode 2 Mode 3 "OFF"

D. PS Setting

(1) PS Error Print

Functions	• To set whether to print or not the error information when an error occurred during PS rasterizing.
Use	• To print the information concerning the postscript error.
Setting/ Procedure	• The default setting is OFF. ON "OFF"

E. Print Reports

- It will not be displayed when the following setting shows that authentication device or vendor is mounted.
  [Service Mode] → [Billing Setting] → [Management Function Choice]
  (It will be displayed when the key counter is mounted.)

Functions	• To output the report or demo page concerning the print setting.
Use	• To check the setting concerning the printer. The types of report available for output are as follows. Configuration Page : The list of printer setting will be output. Demo Page : The test page will be output. PCL Font List : PCL font list will be output. PS Font List : PS font list will be output.
Setting/ Procedure	*1.* Touch [User Setting] → [Printer Setting] → [Print Reports]. *2.* Select the report to be output. *3.* Select the feed tray. *4.* Select Simplex or Duplex print (Only when the auto duplex unit is mounted), and touch the Start key.

8.5.7 Change Password

- When conducting user authentication, it will be displayed only when the authentication is complete.

Functions	• To modify the password used for the user authentication.
Use	• To modify the user authentication password currently used.
Setting/ Procedure	• Enter the user authentication password with the keys on the control panel. Current Password : Enter the user authentication password currently used. New Password : Enter the new user authentication password to be used. Retype Password : Enter the new user authentication password again. **NOTE** • **When [Password Rules] which can be displayed by the following setting is set to "ON", password using the single letter or the password same with the previous one, less than 8-digit will not be modified.** **[Utility] → [Administrator Setting] → [Security Setting]** • **When the following setting is set to "ON", entering the incorrect password three times will cause access lock. When an access lock occurred, turn the main power switch OFF, and wait for 10 seconds or more and turn main power switch ON again to enter the password again.** **[Administrator Setting] → [Security Setting] → [Enhanced Security Mode]**

8.5.8 Change E-Mail Address

- When conducting user authentication, it will be displayed only when the authentication is complete.

Functions	• To modify the e-mail address which is registered as a user.
Use	• To use when modifying the e-mail address currently being used.
Setting/ Procedure	• Enter the new e-mail address using the keys on the control panel.

8.6 Administrator Setting

- The Administrator Setting will be available by entering the administrator password (8 digits) set by the administrator setting or Service Mode.
  (The administrator password is initially set to “12345678.”)

NOTE

- **When the following setting is set to “ON”, entering the incorrect administrator password three times will cause access lock. When an access lock occurred, turn the main power switch OFF, and wait for 10 seconds or more and turn main power switch ON again to enter the password again.**
  [Administrator Setting] → [Security Setting] → [Enhanced Security Mode]

8.6.1 System Setting

A. Power Save

(1) Low Power Mode Setting

Functions	• To set the time until low power starts operating after the last key operation has been completed. • Low power: To turn LED and LCD OFF, and lower the power consumption.
Use	• To change the time until low power starts.
Setting/ Procedure	• Use the 10-key pad for setting. • The default setting is 15 min. “15 min.” (10 to 240)

(2) Sleep Mode Setting

Functions	• To set the time until sleep mode starts operating after the last key operation has been completed. • Turn all lines OFF except 5 V line for control. • “OFF” will only be displayed when “No Sleep” in Service Mode is set.
Use	• To change the time until the sleep mode starts. **NOTE** • **The sleep mode will begin in 48 hours even if it sets it to “OFF.”**
Setting/ Procedure	• Use the 10-key pad for setting. • The default setting is 30 min. “30 min.” (15 to 240) / OFF

(3) Power Save Key

Functions	• To set the type of the power save mode which starts by pressing the Power Save key.
Use	• To change the power save function which starts by pressing the Power Save key.
Setting/ Procedure	• The default setting is Low Power. “Low Power” Sleep

(4) Entering Power Save Mode (Fax)

- It will be displayed only when the optional fax kit (FK-502) is mounted.

Functions	• To set whether to immediately switch to the power save mode after printing in case of receiving the fax during power save mode.
Use	• To immediately switch to the power save mode after printing in case of receiving the fax during power save mode. Normal : Switches to the power save mode according to the normal power save mode after the printing. Immediately : Switches to the power save mode immediately after the printing.
Setting/ Procedure	• The default setting is Normal. "Normal" Immediately

B. Output Setting

(1) Print/Fax Output Settings

Functions	• To set the timing for printing for the PC print job or fax received.
Use	Batch Print : Starts printing when all data are received Page Print : Starts printing every time data for each page are received
Setting/ Procedure	<Printer> • The default setting is Page Print. <Fax> • The default setting is Batch Print. **NOTE** • **[FAX] will be displayed only when the optional fax kit (FK-502) is mounted.**

(2) Output Tray Setting

- It will be displayed only when the optional finisher FS-514 is mounted.

Functions	• To set the priority output tray for each application (Copy print, Printer, Fax and Print Reports).
Use	• To change the output tray according to the application.
Setting/ Procedure	• The default settings are as follows. Copy : Tray 1 (Tray 3: When [Bin Setting] is enabled.) Print : Tray 1 Report Output : Tray 2 (Tray 3: When the optional OT-601 is mounted./When [Bin Setting] is enabled.) Fax (Main Line) : Tray 2 (Tray 3: When the optional OT-601 is mounted./When [Bin Setting] is enabled.) Fax (2nd Line) : Tray 2 (Tray 3: When the optional OT-601 is mounted./When [Bin Setting] is enabled.)

(3) Bin Setting

- It will be displayed only when the optional mailbin kit MT-501 is mounted.

Functions	• Assign the first exit tray (tray 1) of the finisher to the mailbin 5, and the second exit tray (tray 2) to the mailbin 6. • The second exit tray (tray 2) can be assigned when the optional exit tray OT-601 is mounted.
Use	• Use when assigning the first and the second exit tray of the finisher to the mailbins.
Setting/ Procedure	• The default setting is Disable. Enable “Disable”

(4) Offset Each Job Setting

- It will be displayed only when the optional finisher FS-514 is mounted.

Functions	• To set whether to offset each job when paper is printed using the finisher FS-514.
Use	• Some paper type may fail to be discharged or get deteriorated loading when large volume copies are printed using the finisher FS-514. This function is used to print large volume copies when FS-514 is mounted. (When this function is set to “OFF”, the paper is discharged without offsetting the paper to the center of the tray.)
Setting/ Procedure	• The default setting is ON. “ON” OFF

C. Date/Time Setting

Functions	• To set the date/time and the time zone to start the clock.
Use	• To change settings concerning the date/time. • This setting should be carried out for set up.
Setting/ Procedure	• For time zone, set the time difference with the world standard time. • Setting range for the time zone: -12:00 to +12:00 (by 30 minutes) • When the following setting is set to “ON”, [Set Data] will be displayed. Touch [Set Data] and modify the time. [Administrator Setting] → [Network Setting] → [Detail Setting] → [Time Adjustment Setting]

D. Daylight Saving Time Setting

Functions	• To set whether to set the daylight saving time. • To set the time difference in setting the daylight saving time.
Use	• To set the daylight saving time.
Setting/ Procedure	• The default setting is OFF. ON “OFF” • When setting to ON, set the time difference to move up. “60 min.” (1 to 150)

E. Weekly Timer Setting

- It will not be displayed when the following setting shows that vendor 1 or vendor 2 is mounted.
  [Service Mode] → [Billing Setting] → [Management Function Choice]

(1) Weekly Timer ON/OFF Setting

Functions	• To set whether to use or not to use the weekly timer.
Use	• To set the weekly timer.
Setting/ Procedure	• The default setting is OFF. ON "OFF"

(2) Time Setting

Functions	• To set the time to turn ON/OFF the weekly timer for each day of the week.
Use	
Setting/ Procedure	*1.* Touch the key of the day to be set. *2.* Using the 10-key pad, input the ON time and the OFF time. *3.* For cancelling the setting, press [Clear].

(3) Date Setting

Functions	• To select the date or the day of the week for the weekly timer to function.
Use	
Setting/ Procedure	*1.* Select the Year/Month with [+] / [-] keys. *2.* For setting by the date, touch the appropriate key of the day. *3.* For setting by the day of the week, touch the appropriate key of the week by [Daily Setting]. *4.* Check to make sure that the set key of the day is highlighted, and touch [OK].

(4) Select Time for Power Save

Functions	• To set the time to turn power OFF/ON when the weekly timer is set and the power is ON.
Use	• To turn power OFF for a certain period of time when the weekly timer is set.
Setting/ Procedure	• The default setting is OFF. ON "OFF" <Set Time for Power Save> • Using the 10-key pad, input the time to turn OFF and to turn back ON again.

(5) Password for Non-Business Hours

Functions	• To set whether to input the password before using when the weekly timer is set.
Use	• To set the password for turning the power ON temporarily when the weekly timer is set.
Setting/ Procedure	• The default setting is OFF. ON "OFF" • When setting to ON, enter the password (eight digits).

F. Restrict User Access

- It will not be displayed when the following setting shows that vendor 1 is mounted.
  [Service Mode] → [Billing Setting] → [Management Function Choice]

(1) Restrict Access to Saved Program Jobs

Functions	• To set the prohibition for modifying the registered copy program.
Use	• To be used when prohibiting the user from changing the copy program.
Setting/ Procedure	*1.* Touch the key for the appropriate copy program. *2.* Touch [OK].

(2) Delete Saved Program Jobs

Functions	• To delete the registered program job.
Use	• To delete the registered program job.
Setting/ Procedure	*1.* Touch the appropriate program job. *2.* Touch [Delete]. *3.* Touch [Yes] on the check screen to delete the program job.

(3) Restrict Access to Job Settings

<Changing Job Priority>

Functions	• To set whether to allow or restrict the change on the print priority for the job.
Use	• To restrict the change on the print priority for the job.
Setting/ Procedure	• The default setting is Allow. "Allow" Restrict

<Deleting Other User's Jobs>

Functions	• To set whether to allow or restrict job delete by other users when the user is authenticated.
Use	• To allow other users to delete the job when the user is authenticated.
Setting/ Procedure	• The default setting is Restrict. Allow "Restrict"

<Registering and Changing Addresses>

Functions	• To set whether to allow or restrict the change of the registered address.
Use	• To prohibit the change on the registered address.
Setting/ Procedure	• The default setting is Allow. "Allow" Restrict **NOTE** • **[Allow] cannot be selected when the following setting is set to "ON".** **[Administrator Setting] → [Security Setting] → [Enhanced Security Mode]**

<Changing Zoom Ratio>

Functions	• To set whether to allow or restrict the change on the registered magnification.
Use	• To prohibit the change on registered magnification.
Setting/ Procedure	• The default setting is Allow. "Allow" Restrict

<Changing the "From" Address>

Functions	• To set whether or not to prohibit the registered from address to be changed.
Use	• To prohibit changing the registered from address.
Setting/ Procedure	• The default setting is Allow. "Allow" Restrict

(4) Restrict Operation Setting

<Restrict Fax Broadcasting>

Functions	• To set whether or not to prohibit sending the fax to more than one address.
Use	• To prohibit sending the fax to more than one address.
Setting/ Procedure	• The default setting is OFF. ON "OFF"

G. Expert Adjustment

- It will not be displayed when the following setting shows that vendor 1 or vendor 2 is mounted.
  [Service Mode] → [Billing Setting] → [Management Function Choice]
  (It will be displayed when the Key Counter is mounted or when the following setting shows that switch No.33 is set to [01] at HEX assignment.
  [Service Mode] → [System 2] → [Software Switch Setting])

(1) AE Level Adjustment

Functions	• To set the default setting for AE (Auto Exposure) the larger the value becomes the more emphasized the background will be.
Use	To make the background level foggier: Increase the setting value To make the background level less foggy: Decrease the setting value
Setting/ Procedure	• The default setting is 2. "2" (0 to 4)

(2) Printer Adjustment

<Leading Edge Adjustment>

Functions	• To vary the print start position in the sub scan direction for each of different paper types in tray 1.
Use	• The PH unit has been replaced. • The paper type has been changed. • The image on the copy deviates in the sub scan direction. • A faint image occurs on the leading edge of the image.
Adjustment Specification	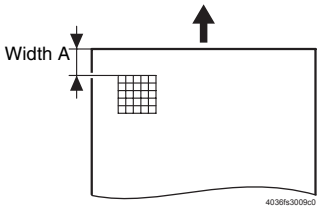 Width A on the test pattern produced should fall within the following range. Specifications: 4.2 ± 0.5 mm Setting range: -3.0 mm to +3.0 mm (in 0.2 mm increments)
Adjustment Instructions	If width A is longer than the specifications, make the setting value smaller than the current one. If width A is shorter than the specifications, make the setting value greater than the current one.
Setting/ Procedure	*1.* Call the Administrator Setting to the screen. *2.* Touch [System Setting] → [Expert Adjustment] → [Printer Adjustment] → [Leading Edge Adjustment]. *3.* Select the [Normal]. *4.* Press the Start key to let the machine produce a test pattern. *5.* Check the dimension of width A on the test pattern. *6.* If width A falls outside the specified range, change the setting using the [+] / [-] key. *7.* Press the Start key to let the machine produce a test pattern. *8.* Check the dimension of width A on the test pattern. *9.* If width A is outside the specified range, change the setting again and make a check again. *10.*If width A falls within the specified range, touch [OK]. *11.*Following the same procedure, adjust for thick 1 to 3, OHP, and envelope.

<Centering>

Functions	• To vary the print start position in the main scan direction for each paper source.
Use	• The PH unit has been replaced. • A paper feed unit has been added. • The image on the copy deviates in the main scan direction.
Adjustment Specification	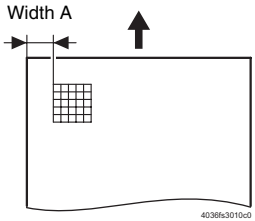 Width A on the test pattern produced should fall within the following range. Specifications: 3.0 ± 0.5 mm Setting range: -3.0 mm to +3.0 mm (in 0.2 mm increments)
Adjustment Instructions	If width A is longer than the specifications, make the setting value smaller than the current one. If width A is shorter than the specifications, make the setting value greater than the current one.
Setting/ Procedure	*1.* Call the Administrator Setting to the screen. *2.* Touch [System Setting] → [Expert Adjustment] → [Printer Adjustment] → [Centering]. *3.* Select the paper source to be adjusted. *4.* Press the Start key to let the machine produce a test pattern. *5.* Check the dimension of width A on the test pattern. *6.* If width A falls outside the specified range, change the setting using the [+] / [-] key. *7.* Press the Start key to let the machine produce a test pattern. *8.* Check the dimension of width A on the test pattern. *9.* If width A is outside the specified range, change the setting again and make a check again. *10.*If width A falls within the specified range, touch [OK]. *11.*Following the same procedure, adjust for all other paper sources. (Use A4 or 8 $^1/_2$ × 11 plain paper for the bypass.)

<Centering (Duplex 2nd Side)>

Functions	• To vary the print start position in the main scan direction for each paper source in the 2-sided mode.
Use	• To use when the optional automatic duplex unit AD-503 is set up. • The image on the backside of the 2-sided copy deviates in the main scan direction.
Adjustment Specification	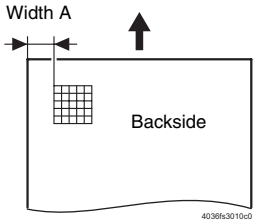 •Width A on the test pattern produced should fall within the following range. •For measurement, use the image produced on the backside of the test pattern. Specifications: 3.0 ± 0.5 mm Setting range: -3.0 mm to +3.0 mm (in 0.2 mm increments)
Adjustment Instructions	• If width A is longer than the specifications, make the setting value smaller than the current one. • If width A is shorter than the specifications, make the setting value greater than the current one.
Setting/ Procedure	*1.* Call the Administrator Setting to the screen. *2.* Touch [System Setting] → [Expert Adjustment] → [Printer Adjustment] → [Centering (Duplex 2nd Side)]. *3.* Select the paper source to be adjusted. *4.* Press the Start key to let the machine produce a test pattern. *5.* Check the dimension of width A on the test pattern. *6.* If width A falls outside the specified range, change the setting using the [+] / [-] key. *7.* Press the Start key to let the machine produce a test pattern. *8.* Check the dimension of width A on the test pattern on the backside of the copy. *9.* If width A is outside the specified range, change the setting again and make a check again. *10.*If width A falls within the specified range, touch [OK]. *11.*Following the same procedure, adjust for all other paper sources. (Use A4 or 8 $^1/_2$ × 11 plain paper for the manual bypass tray.)

<Media Adjustment>

Functions	• Adjust the 2nd image transfer output (ATVC) on the 1st page and the 2nd page for each paper type. • This function is provided to open [Transfer Output Fine Adjustment] → [2nd Transfer Adjust] of Service Mode up to administrator and the fine-adjusted value is reflected in the Service Mode setting.
Use	• To use when the transfer failure at the trailing edge occurs.
Adjustment Specification	"0" (-5 to +5)
Adjustment Instructions	To increase the ATVC value (in the direction of a foggier image): increase the setting value in + direction. To decrease the ATVC value (in the direction of a less foggy image): increase the setting value in - direction.
Setting/ Procedure	*1.* Call the Administrator Setting to the screen. *2.* Touch these keys in this order: [Expert Adjustment] → [Printer Adjustment] → [Media Adjustment]. *3.* Select the side of the image (Front side or Back side), on which the transfer failure at the trailing edge occurs. *4.* Select the paper type with the transfer failure at the trailing edge. *5.* Enter the new setting from the [+/-]. *6.* Touch [OK] to validate the adjustment value. *7.* Check the copy image for any image problem.

<Erase Leading Edge>

- It will be displayed only when the following setting is set to "Level 2".
  [Service Mode] → [Enhanced Security] → [Administrator Feature Level]

Functions	• To set the leading edge erase amount of the paper.
Use	• To change the width of the area not printed along the leading edge of the paper.
Setting/ Procedure	• The default setting is "4 mm". "4 mm" 5 mm 7 mm

(3) Finisher Adjustment

- For details of adjustment method, see FS-514 Service Manual.

See P.46

(4) Density Adjustment

<Thick Paper Image Density-Yellow, Magenta, Cyan, Black>

Functions	• To fine-adjust density of printed images of each color for thick paper and OHP transparencies.
Use	• To change the density of the printed image for each color with thick paper and OHP transparencies
Adjustment Range	Lighter (5 steps), "Std", Darker (5 steps)
Adjustment Instructions	Light color: Touch the Darker key. Dark color: Touch the Lighter key.
Adjustment Procedure	*1.* Call the Administrator Setting to the screen. *2.* Touch [System Setting] → [Expert Adjustment] → [Density Adjustment] → [Thick Paper Image Density-Yellow/Magenta/Cyan/Black]. *3.* Touch the Lighter or Darker key for the desired color to correct the image density.

<Black Image Density>

Functions	• To fine-adjust the density of the printed image for a black copy
Use	• To vary the density of the printed image of a black copy
Adjustment Range	Lighter (2 steps), “Std”, Darker (2 steps)
Adjustment Instructions	If the black is light, touch the Darker key. If the black is dark, touch the Lighter key.
Setting/ Procedure	*1.* Call the Administrator Setting to the screen. *2.* Touch [System Setting] → [Expert Adjustment] → [Density Adjustment] → [Black Image Density]. *3.* Touch the Lighter or Darker key as necessary to correct the image density.

(5) Image Stabilization

<Image Stabilization Only>

Functions	• The image stabilization sequence is carried out without clearing the historical data of image stabilization control.
Use	• Use if an image problem persists even after [Gradation Adjustment] has been executed. • When [D Max Density] and [Background Voltage Margin] of Service Mode are changed.
Setting/ Procedure	*1.* Call the Administrator Setting to the screen. *2.* Touch [System Setting] → [Expert Adjustment] → [Image Stabilization] → [Image Stabilization Only]. *3.* Press the Start key to start Stabilizer. The Start key turns orange and stays lit up orange during the Stabilizer sequence. *4.* Stabilizer is completed when the Start key turns green.

<Initialize+Image Stabilization>

Functions	• To carry out an image stabilization sequence after the historical data of image stabilization control has been initialized.
Use	• Use if an image problem persists even after [Gradation Adjustment] has been executed. • Use if tone reproduction and maximum density are faulty even after image stabilization has been executed.
Setting/ Procedure	*1.* Call the Administrator Setting to the screen. *2.* Touch [System Setting] → [Expert Adjustment] → [Image Stabilization] → [Initialize+Image Stabilization]. *3.* Press the Start key to start Stabilizer. The Start key turns orange and stays lit up orange during the Stabilizer sequence. *4.* Stabilizer is completed when the Start key turns green.

(6) Pre-Detection of Lines

<Detect Lines Prior to Job>

Functions	• To set whether or not to perform pre-detection of stain on the ADF original glass. • To set the detection level of the pre-detection of stain on the ADF original glass. • To set how to display the warning when stain on the ADF original glass is detected.
Use	• Use when changing the display of the warning which requests the cleaning of the stain on the glass detected by the pre-detection of the lines. 0: Warning will not be displayed. 1: Warning will be displayed by the maintenance mark. (warning code: D-1/D-2) 2: Warning will be displayed on the message area on the basic screen. 3: Warning will be displayed on all screens. • Use when changing the detection level for the pre-detection of stain on the original glass. Low : Stain on the glass will not be detected easily. Normal : Normal detection level High : Stain on the glass will easily be detected.
Setting/ Procedure	• The default setting is ON. "ON" OFF **NOTE** • **[Warning Level] and [Detection Level] can be set when "ON" is selected.** • **Be aware that selecting "OFF" and performing the pre-detection with the following setting will display "NG."** **[Service Mode] → [Machine] → [Thin Line Prior Detection]** <Warning Level> • The default setting is 2. 0 1 "2" 3 <Detection Level> • The default setting is Normal. Low "Normal" High

<Detect & Remove During Job>

Functions	• To set the operation for detection and removing operation of stain on the ADF original glass when feeding the original.
Use	• Use when changing the operation for detection and removing operation of stain on the ADF original glass when feeding the original. 0 : The glass will stop moving when the original is fed, and will not perform removing the stain. 1 : The glass will move between originals when feeding the original. 2 : When the original is fed, the glass will move while reading the original in order to remove the stain, and reduce the lines. 3 to 6 : When the original is fed, the glass will move while reading the original in order to remove the stain. The lines will be reduced also by the image process control. The level 3, 4, 5, and 6 of the image process are set in this order with 3 being the most efficient in reducing the lines. • When the following setting is set to “0” or “1”, the range which the administrator can set will be restricted to “0 (Disable)” or “1 (Enable).” [Service mode] → [System 2] → [Thin Line Detect. Setting] → [Detection during paper passing]
Setting/ Procedure	• The default setting is 1. 0 to 6

(7) Color Registration Adjust

- It will not be displayed when the following setting shows that Management Device 1 is mounted during the device power is OFF or no authentication is set.
  [Service Mode] → [Billing Setting] → [Management Function Choice]

<Color Registration Adjust (Yellow, Magenta, Cyan)>

Functions	• To adjust color shift if there is any when comparing the original with copy of the plain or thick paper.
Use	• To correct any color shift
Adjustment Range	"0" (-6 to +6 dot)
Adjustment Instructions	If the cross deviates in the direction of C, increase the setting. If the cross deviates in the direction of D, decrease the setting.
Setting/ Procedure	*1.* Call the Administrator Setting to the screen. *2.* Touch [System Setting] → [Expert Adjustment] → [Color Registration Adjust]. *3.* Load tray 1 with A3/11x17 or A4/8 $^1/_2$ x11 normal paper. *4.* Press the Start key. *5.* On the test pattern produced, check for deviation between the black line and the line of each color at positions X and Y. *6.* Select the color to be adjusted. *7.* Using the [+] / [-] key, change the setting value as necessary. (At this time, only the line of the selected color moves.) *8.* Produce another test pattern and make sure that there is no deviation. Check Procedure Check point X, Y 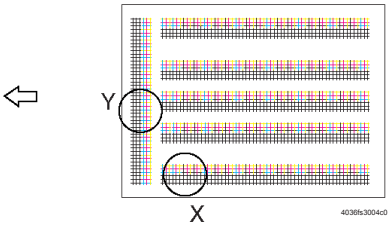 Adjustment for X direction: Check point X If the cross deviates in the direction of C, increase the setting. If the cross deviates in the direction of D, decrease the setting. Direction of C 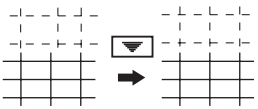 4036fs3005c0 Direction of D 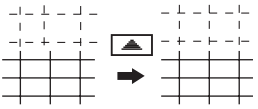 4036fs3006c0 Adjustment for Y direction: Check point Y If the cross deviates in the direction of C, increase the setting. If the cross deviates in the direction of D, decrease the setting. Direction of C 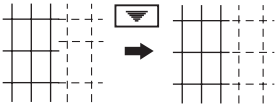 4036fs3007c0 Direction of D 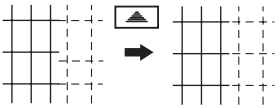 4036fs3008c0

(8) Gradation Adjustment

- It will not be displayed when the following setting is set to “ON”.
  [Service Mode] → [Imaging Process Adjustment] → [Dev. Bias Choice]
- It will not be displayed when the following setting shows that Management Device 1 is mounted during the device power is OFF or no authentication is set.
  [Service Mode] → [Billing Setting] → [Management Function Choice]

Functions	• To make an automatic adjustment of gradation based on the test pattern produced and the readings taken by the scanner
Use	• Color reproduction performance becomes poor. • The IU has been replaced. • The image transfer belt unit has been replaced. • Printer (Gradation) : It gives the highest priority to gradation performance of the image as it adjusts. • Printer (Resolution) : It gives the highest priority to reproduction performance of letters and lines as it adjusts. • Copy : It gives the highest priority to increasing the number of images to be stored in the memory as it adjusts.
Adjustment Procedure	**NOTE** • **Before conducting the gradation adjustment, make sure to turn main power switch OFF to stabilize the image. Wait for more than ten seconds and turn main power switch back ON.** *1.* Call the Administrator Setting to the screen. *2.* Touch [System Setting] → [Expert Adjustment] → [Gradation Adjustment]. *3.* Select the appropriate mode for the gradation adjustment. *4.* Press the Start key to let the machine produce a test pattern. *5.* Place the test pattern produced on the original glass. *6.* Place ten blank sheets of A3/11x17 paper on the test pattern and lower the original cover. *7.* Press the Start key. (The machine will then start scanning the test pattern.) *8.* Touch [OK] and repeat steps from 2 through 7 twice (a total of three times). • If the image is faulty, perform the troubleshooting procedures for image problems.

(9) Scanner Adjustment

- Use the following color chart for the adjustment of the scanner section.
- If the color chart is not available, a scale may be used instead.
- It will be displayed only when the following setting is set to “Level 2”.
  [Service Mode] → [Enhanced Security] → [Administrator Feature Level]
- It will not be displayed when the following setting shows that Management Device 1 is mounted during the device power is OFF or no authentication is set.
  [Service Mode] → [Billing Setting] → [Management Function Choice]

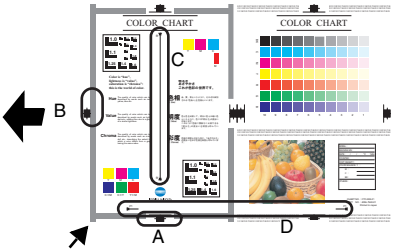

Original reference

4038F3C517DA

- A: Centering
- B: Leading Edge Adjustment
- C: Horizontal Adjustment
- D: Vertical Adjustment

<Leading Edge Adjustment>

Functions	• To adjust variations in mounting accuracy and sensitivity of the scanner home sensor and in mounting accuracy of the original width scale by varying the scan start position in the main scan direction.
Use	When the original glass is replaced. When the original width scale is replaced.
Adjustment Specification	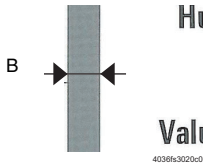 •B width on the color chart and one on the copy sample are measured and adjusted so that the difference of B width satisfies the specifications shown below. •An adjustment must have been completed correctly of [Leading Edge Adjustment] of the Printer Adjustment. Specifications B: ± 0.5 mm Setting range -5.0 to +5.0 (in 0.1 mm increments)
Adjustment Instructions	If the copy image is less than the specified length, increase the setting value. If the copy image exceeds the specified length, decrease the setting value.
Setting/ Procedure	*1.* Call the Administrator Setting to the screen. *2.* Touch [System Setting] → [Expert Adjustment] → [Scanner Adjustment] → [Leading Edge Adjustment]. *3.* Position the color chart correctly so that the original reference point is aligned with the scale. *4.* Press the Start key to make a copy. *5.* Check point B on the image of the copy. *6.* If the image falls outside the specified range, change the setting using the [+] / [-] key. *7.* Press the Start key to make another copy. *8.* Check the image on the copy to see if the specifications are met. *9.* Make adjustments until the specifications are met.

<Centering>

Functions	• To adjust part-to-part variations in accuracy of IR parts and their mounting accuracy by varying the scan start position in the main scan direction.
Use	• When the CCD unit is replaced. • When the original glass is replaced. • The scanner home sensor has been replaced.
Adjustment Specification	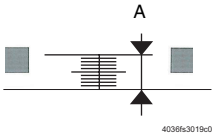 •A width on the color chart and one on the copy sample are measured and adjusted so that the difference of A width satisfies the specifications shown below. •An adjustment must have been completed correctly of [Leading Edge Adjustment] of the Printer Adjustment. Specifications A: ± 1.0 mm Setting range -10.0 to +10.0 (in 0.1 mm increments)
Adjustment Instructions	If the copy image is less than the specified length, increase the setting value. If the copy image exceeds the specified length, decrease the setting value.
Setting/ Procedure	*1.* Call the Administrator Setting to the screen. *2.* Touch [System Setting] → [Expert Adjustment] → [Scanner Adjustment] → [Centering]. *3.* Position the color chart correctly so that the original reference point is aligned with the scale. *4.* Press the Start key to make a copy. *5.* Check point A on the image of the copy. *6.* If the image falls outside the specified range, change the setting using the [+] / [-] key. *7.* Press the Start key to make a copy. *8.* Check point A of the image on the copy to see if the specifications are met. *9.* Make adjustments until the specifications are met.

<Horizontal Adjustment>

Functions	• To adjust the zoom ratio in the main scan direction for the scanner section
Use	• The CCD unit has been replaced.
Adjustment Specification	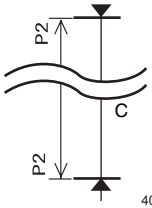 •Measure C width on the color chart and on the sample copy, and adjust the gap to be within the following specification. Specifications C: ± 1.0 mm Setting range 0.990 to 1.010 (in 0.001 increments)
Adjustment Instructions	If the C width on the copy sample is less than one on color chart, increase the setting. If the C width on the copy sample exceeds one on color chart, decrease the setting.
Setting/ Procedure	*1.* Call the Administrator Setting to the screen. *2.* Touch [System Setting] → [Expert Adjustment] → [Scanner Adjustment] → [Horizontal Adjustment]. *3.* Position the color chart correctly so that the original reference point is aligned with the scale. *4.* Press the Start key to make a copy. *5.* Check the C width on the image of the copy. *6.* If the image falls outside the specified range, change the setting using the [+] / [-] key. *7.* Press the Start key to make another copy. *8.* Check the image on the copy to see if the specifications are met. *9.* Make adjustments until the specifications are met.

<Vertical Adjustment>

Functions	• To adjust the zoom ratio in the sub scan direction for the scanner section
Use	• The scanner assy has been replaced. • The scanner motor has been replaced. • The scanner drive cables have been replaced.
Adjustment Specification	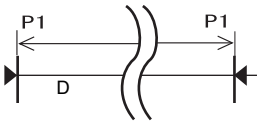 4038F3C518DA •Measure D width on the color chart and on the sample copy, and adjust the gap to be within the following specification. Specifications D: ± 1.5 mm Setting Range 0.990 to 1.010 (in 0.001 increments)
Adjustment Instructions	If the D width on the copy sample is less than one on color chart, increase the setting. If the D width on the copy sample exceeds one on color chart, decrease the setting.
Setting/ Procedure	*1.* Call the Administrator Setting to the screen. *2.* Touch [System Setting] → [Expert Adjustment] → [Scanner Adjustment] → [Vertical Adjustment]. *3.* Position the color chart correctly so that the original reference point is aligned with the scale. *4.* Press the Start key to make a copy. *5.* Check the D width on the image of the copy. *6.* If the image falls outside the specified range, change the setting using the [+] / [-] key. *7.* Press the Start key to make another copy. *8.* Check the image on the copy to see if the specifications are met. *9.* Make adjustments until the specifications are met.

(10) ADF Adjustment

- It will be displayed only when the following setting is set to “Level 2”.
  [Service Mode] → [Enhanced Security] → [Administrator Feature Level]
- For details of adjustment method, see DF-608 Service Manual.

See P.26

H. List/Counter

(1) Management List

- It will not be displayed when the following setting shows that vendor is mounted.
  [Service Mode] → [Billing Setting] → [Management Function Choice]

⚠1 (It will be displayed when the Key counter is mounted or when the following setting shows that switch No.33 is set to [01] at HEX assignment.
[Service Mode] → [System 2] → [Software Switch Setting])

Functions Use	• To output the value set by the setting menu.
Setting/ Procedure	*1.* Touch [Job Settings List]. *2.* Select the feed tray. *3.* Select simplex or duplex print, (only when the duplex unit is mounted), and touch the Start key.

(2) Paper Size/Type Counter

Functions	• To register the combination of the specific paper size and the paper type, and to set the count.
Use	
Setting/ Procedure	*1.* Press a key out of 1 to 10 registration keys. *2.* Select the paper type. *3.* Touch the paper size key to select the paper size.

(3) Meter Counter List

- Setting will be available only when the following setting shows that either Authentication Device, Management device 2, Vendor 1, Vendor 2 or Key counter IF vendor is mounted.
  [Service Mode] → [Billing Setting] → [Management Function Choice]

Functions	• To output the meter counter list.
Use	• To print out the list in this setting because counter list cannot be printed when the following setting shows that vendor is mounted. [Meter Counter] → [Details]
Setting/ Procedure	*1.* Touch [Meter Counter List]. *2.* Select the Feed tray. *3.* Select Simplex or Duplex print, (only when the Auto Duplex unit is mounted), and touch the Start key.

(4) Consumable Life List

- Setting will be available only when the following setting shows that either Authentication Device, Management device 2, Vendor 1, Vendor 2 or Key counter IF vendor is mounted.
  [Service Mode] → [Billing Setting] → [Management Function Choice]

Functions	• To output the consumable life list
Use	• To print out the list in this setting because the list cannot be printed when the following setting shows that Vendor is mounted. [Utility] → [Check Consumable Life]
Setting/ Procedure	*1.* Touch [Consumable Life List]. *2.* Select the Feed tray. *3.* Select Simplex or Duplex print, (only when the Auto Duplex unit is mounted), and touch the Start key.

I. Reset Setting

(1) System Auto Reset

Functions	• To set the period of time until system auto reset starts functioning.
Use	• To change the period of time until system auto reset starts functioning.
Setting/ Procedure	<Priority Mode> • To set the functions displayed during system auto reset from copier, scanner, fax and the Box. **NOTE** • **[Fax] will be displayed only when the optional fax kit (FK-502) is mounted.** • The default setting is Copy. "Copy" Scan Fax Box <System Auto Reset Time> • The default setting is 1 min. "1 min." (1 to 9, OFF)

(2) Auto Reset

Functions	• To set the period of time until auto reset starts functioning in "Copier", "Scanner", and the "Fax."
Use	• To change the period of time until auto reset starts functioning.
Setting/ Procedure	• The default setting is 1 min. "1 min." (1 to 9, OFF)

(3) Job Reset

<When Account is changed>

Functions	• To select whether to reset the copying mode functions to the default ones when the key counter is unplugged, a magnetic card is pulled out, user authentication/account track is set.
Use	• To select not to reset to the default settings even when the accounts are changed through the use of a data management device.
Setting/ Procedure	• The default setting is Reset. "Reset" Do Not Reset

<When Original is set on ADF>

Functions	• To set whether to set the copy mode to the default setting when the original is set to ADF.
Use	• To reset the copy mode to the default setting when the original is set to ADF.
Setting/ Procedure	• The default setting is Do Not Reset. Reset "Do Not Reset"

<When NEXT JOB is selected: Staple Setting>

Functions Use	• To set whether to cancel the staple setting when the staple setting job started and the next job setting has become available.
Setting/ Procedure	• The default setting is OFF. ON "OFF"

<When NEXT JOB is selected: Original Set / Bind Direction>

Functions Use	• To set whether to cancel the original set/bind direction when the job (which original set/bind direction is set) started and the next job setting has become available.
Setting/ Procedure	• The default setting is OFF. ON "OFF"

<When NEXT JOB is selected: Reset Data After Job>

Functions Use	• To set whether to cancel the setting for scanning or transmitting fax when the scanning is finished or fax is transmitted, making the next job setting available. (The address will be cleared even when [OFF] is selected.)
Setting/ Procedure	• The default setting is ON. "ON" OFF

J. User Box Setting

(1) Delete Unused User Box

Functions Use	• To delete the unnecessary box without data.
Setting/ Procedure	*1.* Touch [Delete Unused User Box]. *2.* Touch [Yes] on the Check screen.

(2) Delete Secure Print Documents

Functions Use	• To delete the whole classified documents in the box.
Setting/ Procedure	*1.* Touch [Delete Secure Documents]. *2.* Touch [Yes] on the Check screen.

(3) Auto Delete Secure Document

Functions Use	• To set whether or not to delete the confidential documents in the box after a certain period of time. It also sets the period of time to store data.
Setting/ Procedure	• The default setting is 1 Day. 12 Hours "1 Day" 2 Days 3 Days 7 Days 30 Days Save

K. Standard Size Setting

- It will be displayed only when the following setting is set to “Level 2”.
  [Service Mode] → [Enhanced Security] → [Administrator Feature Level]

(1) Original Glass Original Size Detect

Functions	• To change the document size detection table.
Use	• Use to change the setting for the document size detection table.
Setting/ Procedure	• The default setting is Table1. “Table1” Table2

(2) Foolscap Size Setting

Functions	• To set the size for foolscap paper.
Use	• Upon setup. • To change the size for foolscap paper.
Setting/ Procedure	• Select the size from among the following five. 220 x 330 mm $8^1/_2$ x 13 $8^1/_4$ x 13 $8^1/_8$ x $13^1/_4$ “8 x 13”

8.6.2 Administrator/Machine Setting

A. Administrator Registration

Functions Use	• To register the information on administrator and the from address for e-mail transmission.
Setting/ Procedure	*1.* Touch [Name], [E-Mail Address] to input them. *2.* Using the 10-key pad, enter the extension No.

B. Input Machine Address

Functions	• To register the name of the machine and e-mail address.
Use	Machine Name : When the file name of the transmitted file or the document name of document registered in Box is generated automatically, it is added. E-Mail : To be used as from address at internal Fax transmission.
Setting/ Procedure	*1.* Touch [Machine Name] and input the name. *2.* Touch [E-Mail] and input the E-Mail address.

2

8.6.3 One-Touch Registration

A. Scan

- It will not be displayed when the following setting shows that authentication device is mounted.
  [Service Mode] → [Billing Setting] → [Management Function Choice]

(1) Address Book

<E-Mail>

Functions Use	• To register/change the e-mail address for transmitting the scanned data by e-mail.
Setting/ Procedure	• Touch [New] to register the new address. • Select any displayed address to check, edit, or delete the setting.

<FTP>

Functions Use	• To register and change the FTP address for transmitting the scanned data by FTP.
Setting/ Procedure	• Touch [New] to register the new address. • Select any displayed address to check, edit, or delete the setting.

<SMB>

Functions Use	• To register or change the SMB address for transmitting the scanned data by SMB.
Setting/ Procedure	• Touch [New] to register the new address. • Select any displayed address to check, edit, or delete the setting.

<User Box>

Functions Use	• To register or change the box address for storing the scanned data to the box in the hard disk of the machine.
Setting/ Procedure	• Touch [New] to register the new address. • Select any displayed address to check, edit, or delete the setting. • At least one user box must be registered in order to register the box address.

(2) Group

Functions Use	• To register or change the group with a number of addresses to transmit data simultaneously.
Setting/ Procedure	• Touch [New] to register the new group. • elect any displayed group to check, edit, or delete the setting. • At least one address must be registered in order to register the group.

(3) Program

Functions Use	• To register or change the scan program.
Setting/ Procedure	• Select any program No. to check, edit or delete the setting.

(4) Subject/Text (for E-mail)

<Subject>

Functions Use	• To register the e-mail subject for transmitting the scanned data by e-mail.
Setting/ Procedure	• Touch [New] to register the new subject. • Select any displayed subject to detail check, edit, or delete the setting. • The subject can be set as default by selecting the subject displayed on the screen and pressing [Set as Default].

<Text>

Functions Use	• To register the e-mail message for transmitting the scanned data by e-mail.
Setting/ Procedure	• Touch [New] to register the new message. • Select any displayed message to detail check or delete the setting. • The text can be set as default by selecting the text displayed on the screen and pressing [Set as Default].

B. Fax

- Settings are available only when the optional fax kit (FK-502) is mounted.

(1) Address Book

<Addr. Dial>

Functions Use	• To register or change the fax number for transmitting the fax.
Setting/ Procedure	• Touch [New] to register the new address. • Select any displayed address to check, edit, or delete the setting.

<E-Mail>

Functions Use	• To register or change the e-mail address for transmitting the fax original by e-mail.
Setting/ Procedure	• Touch [New] to register the new address. • Select any displayed address to check, edit, or delete the setting.

<User Box>

Functions Use	• To register or change the box address in the hard disk of the machine when storing the fax data in the box.
Setting/ Procedure	• Touch [New] to register the new address. • Select any displayed address to check, edit, or delete the setting. • At least one user box must be registered in order to register the box address.

1 <IP Address Fax Destination>

- Setting will be available only when [IP Address FAX] is set to “ON” in the following settings.
  [Administrator Setting] → [Network Setting] → [Network Fax Setting] → [Network Fax Function Settings]

Functions Use	• To register/change the IP address fax destination when transmitting the IP address fax data.
Setting/ Procedure	• A new address can be registered by touching [New]. • Select any displayed address to check, change or delete the setting.

<Internet Fax Address>

- Setting will be available only when [Internet FAX] is set to “ON” in the following settings. [Administrator Setting] → [Network Setting] → [Network Fax Setting] → [Network Fax Function Settings]

Functions Use	• To register/change the Internet fax address when transmitting the internet fax data.
Setting/ Procedure	• A new address can be registered by touching [New]. • Select any displayed address to check, change or delete the setting.

(2) Group

Functions Use	• To register or change the group with a number of addresses to transmit the fax data simultaneously.
Setting/ Procedure	• Touch [New] to register the new address. • Select any displayed group to check, edit, or delete the setting. • At least one address of the group must be registered in order to register the group.

(3) Program

Functions Use	• To register or change the fax program.
Setting/ Procedure	• Select any Program No, to check, edit, or delete the setting.

(4) Subject/Text (for E-mail)

<Subject>

Functions Use	• To register the e-mail Subject for transmitting the fax original by e-mail.
Setting/ Procedure	• Touch [New] to register the new subject. • Select any displayed subject to detail check, edit, or delete the setting. • The subject can be set as default by selecting the subject displayed on the screen and pressing [Set as Default].

<Text>

Functions Use	• To register the e-mail message for transmitting the fax original by e-mail.
Setting/ Procedure	• Touch [New] to register the new message. • Select any displayed message to detail check or delete the setting. • The text can be set as default by selecting the text displayed on the screen and pressing [Set as Default].

C. User Box

- It will not be displayed when the following setting shows that authentication device or vendor is mounted.
  [Service Mode] → [Billing Setting] → [Management Function Choice]
  (It will be displayed when the key counter is mounted.)

(1) Public/Personal User Box

Functions	• To register or change the box for storing the text data in the hard disk of the machine.
Use	• To register the shared or personal box for any purpose.
Setting/ Procedure	• Touch [New] to register the new box. • Select any displayed box to edit or delete it.

(2) Bulletin Board User Box

Functions	• To register or change the bulletin board user box.
Use	
Setting/ Procedure	• Touch [New] to register the new box. • Select any displayed box to edit or delete it.

(3) Relay User Box

- It will be displayed when the following setting is set to “ON”.
  [Service Mode] → [FAX] → [System] → [Display Setting] → [Relay]

Functions	• To register/change the Relay User Box.
Use	
Setting/ Procedure	• A new box can be registered by touching [New]. • Select any displayed box to change or delete it.

(4) Annotation User Box

Functions	• To register or change the annotation user box.
Use	• To attach the image of the date, time, and/or filing number to the document data stored in the scanner mode, and to distribute them.
Setting/ Procedure	• Touch [New] key to register the new box. • Select any displayed box to change or delete it.

D. One-Touch Registration List

- It will not be displayed when the following setting shows that vendor is mounted.
  [Service Mode] → [Billing Setting] → [Management Function Choice]
  (It will be displayed when the key counter is mounted.)

(1) Address Book List

Functions	• To output the address book list.
Use	• To print the list of abbreviated addresses which are registered.
Setting/ Procedure	*1.* Select the destination type to be output. *2.* Specify the registration No. range to be output. *3.* Touch [Print], and select the paper feed tray. *4.* Select the simplex or duplex print (only when the automatic duplex unit is mounted), and press the Start key to output the list of abbreviated addresses.

(2) Group List

Functions	• To output the group list.
Use	• To print out the list of addresses of the group which are registered.
Setting/ Procedure	*1.* Specify the registration No. range to be output. *2.* Touch [Print], and select the paper feed tray. *3.* Select the simplex or duplex print (only when the automatic duplex unit is mounted), and press the Start key to output the list of abbreviated addresses.

(3) Program List

Functions	• To output the program list.
Use	• To print out the list of the program addresses which are registered.
Setting/ Procedure	*1.* Select the destination type to be output. *2.* Specify the registration No. range to be output. *3.* Touch [Print], and select the paper feed tray. *4.* Select the simplex or duplex print (only when the automatic duplex unit is mounted), and press the Start key to output the list of abbreviated addresses.

(4) E-Mail Subject/Text List

Functions	• To output the subject or the text list.
Use	• To print out the e-mail subject/text List which are registered.
Setting/ Procedure	*1.* Select the paper feed tray. *2.* Select the simplex or duplex print (only when the automatic duplex unit is mounted), and press the Start key to output the list of abbreviated addresses.

8.6.4 User Authentication/Account Track

- It will not be displayed when the following setting is not set to [Unset].
  [Service Mode] → [Billing Setting] → [Management Function Choice]

A. General Settings

(1) User Authentication

Functions	• To set the user authentication method.
Use	• To select whether to authenticate the user by the external server or MFP.
Setting/ Procedure	• The default setting is OFF. "OFF" ON (External Server) ON (MFP) **NOTE** • **[OFF] cannot be selected when the following setting is set to "ON".** **[Administrator Setting] → [Security Setting] → [Enhanced Security Mode]** • Select the type of authentication server when "On (External Server)" is selected. • Select the authentication server type, and conduct setting for each server type. • The default setting is "Active Directory" "Active Directory" NDS NTLM v1 NTLM v2 **NOTE** • **[NTLM v1] and [NTLM v2] will not be displayed when the following setting is set to "OFF".** **[Administrator Setting] → [Network Setting] → [SMB Setting] → [User Authentication (NTLM)]** • **[NDS] will not be displayed when the following setting is set to "OFF".** **[Administrator Setting] → [Network Setting] → [NetWare Setting] → [User Authentication Setting]**

(2) Public User Access

Functions Use	• To set whether to allow or prohibit the nonregistered user to use the system when User authentication has been set.
Setting/ Procedure	• The default setting is Restrict. "Restrict" Allow **NOTE** • **This setting is not available without user authentication.** • **[Allow] cannot be selected when the following setting is set to "ON".** **[Administrator Setting] → [Security Setting] → [Enhanced Security Mode]** • **[Allow] cannot be selected when [Synchronize User Authentication & Account Track] is set to "Do Not Synchronize".**

(3) Account Track

Functions	• To set whether to enable the account track function or not.
Use	• To enable the account track function.
Setting/ Procedure	• The default setting is OFF. "OFF" ON

(4) Account Track Input Method

Functions	• To set the authentication method for the account track.
Use	• To select whether to authenticate by password or by account name & password.
Setting/ Procedure	• The default setting is Account Name & Password. "Account Name & Password" Password Only **NOTE** • **This setting is not available without the account track.** • **"Password Only" cannot be set when using both user authentication and account track.**

(5) Scanner Setting

- It will be displayed only when the optional image controller IC-406 is mounted and user authentication or account track has been set.

Functions	• To set whether to use TWAIN scan function of fiery remote scan or not when user authentication or account track has been set.
Use	• To use TWAIN scan function at the fiery remote scan software supplied with the image controller when user authentication or account track has been set.
Setting/ Procedure	• The default setting is Restrict. "Restrict" Allow

(6) When # of Jobs Reach Maximum

Functions	• To set whether to stop the currently printing job and start the next job, or to stop the machine, when reaching to the upper limit for the number of printed pages set by the user authentication and the account track.
Use	• To stop the machine when the number of printed pages reach the upper limit set by the user authentication and the account track.
Setting/ Procedure	• The default setting is Skip Job. "Skip Job" Stop Job

(7) Synchronize User Authentication & Account Track

Functions	• To set whether to synchronize the user authentication and account track.
Use	• To be used when not to synchronize the user authentication and account track.
Setting/ Procedure	• The default setting is Synchronize. "Synchronize" Do not synchronize **NOTE** • **The setting is available only when carrying out the user authentication and account track.**

(8) # of Counters Assigned for Users

Functions	• To set the number available to be assigned for the user registration and account registration.
Use	• To change the number available to be assigned for the user registration and account registration.
Setting/ Procedure	• The default setting is 500. • The total number to be registered for the user authentication and account track is 1000. The number for the user registration will be set. When setting the [# of Counters Assigned for Users] to 50, the number available for Account Track will be 950. **NOTE** • **The setting is available only when carrying out the user authentication and account track.**

B. User Authentication Setting

- The settings are available only when carrying out the user authentication.

(1) Administrative Setting

<User Name List>

- It cannot select [OFF] when the following setting is set to “ON”.
  [Administrator Setting] → [Security Setting] → [Enhanced Security Mode]

Functions	• To set whether to display or not the list key for user names on user authentication screen.
Use	• To display the list key for user names on user authentication screen
Setting/ Procedure	• The default setting is OFF. ON “OFF”

<Default Function Permission>

Functions	• To set the default value for the function permission in user authentication by the external server.
Use	• To set the function which authenticated user can use when initially authenticating the user by the external server. • Items available for setting: Copy operation, scan operation, fax operation, and printing, and user box operation
Setting/ Procedure	• The default settings are Allow. “Allow” Restrict

<Public User Key>

Functions	• To set whether or not to authenticate the public user on the user authentication screen.
Use	• To authenticate the public user on user authentication screen when [Public User Access] available from [Authentication Method] is set to “Allow”.
Setting/ Procedure	• The default settings are Do Not Display. Display “Do Not Display”

(2) User Registration

Functions	• To register or change the user.
Use	• To register, change or delete the user for authentication.
Setting/ Procedure	*1.* Select the user (001 to 1000). *2.* Input the user name, user password, and e-mail address. ([E-Mail address] will not be displayed when IC-406 is mounted.) **NOTE** • **It cannot be entered when conducting authentication by external server.** *3.* Set the output permission, max allowance set, and function permission, and touch [OK]. **NOTE** • **When the public users are allowed, the output permission and the function permission can be set.**

(3) User Counter

Functions	• To display the status of use of the copier, printer, scanner, and fax for each user.
Use	• To check the status of use of the copier, printer, scanner, and fax for each user.
Setting/ Procedure	*1.* Select the user. *2.* Select the key to check to see the status of use. *3.* For clearing the counter, touch [Clear Counter]. *4.* For clearing the all counters, touch [Reset All Counters].

C. Account Track Setting

- The settings are available only when carrying out the account track.

(1) Account Track Registration

Functions	• To register and change the account.
Use	• To register, change or delete the account for account track.
Setting/ Procedure	*1.* Select the proper Account. *2.* Input the [Account Name] and the [Password]. *3.* Set the [Output Permission], and [Max. Allowance Set], and touch [OK].

(2) Account Track Counter

Functions	• To display the status of use of the copier, printer, scanner, and fax for each account.
Use	• To check the status of use of the copier, printer, scanner, and fax for each account.
Setting/ Procedure	*1.* Select the account. *2.* Select the key for the item to be checked. *3.* For clearing the counter, touch [Clear Counter]. *4.* For clearing the all counters, touch [Reset All Counters].

D. Print without Authentication

- It cannot select [Allow] when the following setting is set to “ON”.
  [Administrator Setting] → [Security Setting] → [Enhanced Security Mode]

Functions	• To set whether to allow or restrict the print which user and account are not specified.
Use	• To allow or restrict printing which user and account are not specified.
Setting/ Procedure	• The default setting is Restrict. Allow “Restrict”

E. Counter List

- The setting is available only when carrying out the user authentication or account track.

Functions	• To print out the User counter and the account counter.
Use	• To output the user counter and account counter to be checked.
Setting/ Procedure	*1.* Touch [Counter List]. *2.* Select the simplex or duplex print (only when the automatic duplex unit is mounted), and press the start key to output the counter list.

8.6.5 Network Setting

A. TCP/IP Setting

- It will not be displayed when the optional image controller IC-406 is mounted.

(1) TCP/IP Setting

Functions	• To set whether to enable or disable TCP/IP setting.
Use	• To disable TCP/IP setting.
Setting/ Procedure	• The default setting is ON. “ON” OFF **NOTE** • **When the setting is changed, turn off the main power switch and turn it on again more than 10 seconds after.**

(2) IP Address Setting Method

Functions	• To set whether to enter the IP address directly or to obtain it automatically.
Use	• To change the method for setting the IP address.
Setting/ Procedure	• The default setting is Auto Input. Manual Input “Auto Input” • When it is set to [Auto Input], select the method to obtain it automatically. DHCP Setting : ON OFF BOOTP Setting : ON OFF ARP/PING Setting : ON OFF AUTO IP Setting : ON OFF **NOTE** • **[ARP/PING Setting] and [Auto IP Setting] cannot be set to “OFF” simultaneously.** • **They will all be set to “ON” when [Manual Input] is changed to [Auto Input].**

(3) IP Address

- It cannot be set when [IP Address Setting Method] is set to “Auto Input”.

Functions	• To set the IP address of the device used in the network.
Use	• To enter the IP address of the machine.
Setting/ Procedure	• IP address version 4 format [0 to 255] . [0 to 255] . [0 to 255] . [0 to 255]

(4) Subnet Mask

- It cannot be set when [IP Address Setting Method] is set to “Auto Input”.

Functions	• To set the subnet mask of the device used in the network.
Use	• To enter the subnet mask of the machine.
Setting/ Procedure	• IP address version 4 format [0 to 255] . [0 to 255] . [0 to 255] . [0 to 255]

(5) Default Gateway

- It cannot be set when [IP Address Setting Method] is set to “Auto Input”.

Functions	• To set the gateway address of the device used in the network.
Use	• To enter the gateway address of the machine.
Setting/ Procedure	• IP address version 4 format [0 to 255] . [0 to 255] . [0 to 255] . [0 to 255]

(6) DNS Server Auto Obtain

Functions	• To set whether or not to enable the auto obtaining of the DNS server address.
Use	• To disable the auto obtaining of the DNS server address.
Setting/ Procedure	• The default setting is Enable. “Enable” Disable **NOTE** • **“Enable” cannot be set when [IP Address Setting Method] is set to “Auto Input”.**

(7) Priority DNS Server

Functions	• To set the priority DNS server.
Use	• To enter priority DNS server.
Setting/ Procedure	• IP address version 4 format [0 to 255] . [0 to 255] . [0 to 255] . [0 to 255]

(8) Substitute 1/2 DNS Server

Functions	• To set the substitute DNS server.
Use	• To enter the substitute DNS server.
Setting/ Procedure	• IP address version 4 format [0 to 255] . [0 to 255] . [0 to 255] . [0 to 255]

(9) DNS Domain Auto Obtain

Functions	• To set whether or not to enable the auto obtaining for the DNS domain name.
Use	• To disable the auto obtaining for the DNS domain name.
Setting/ Procedure	• The default setting is Enable. "Enable" Disable **NOTE** • **"Enable" cannot be set when [IP Address Setting Method] is set to "Auto Input".**

(10) DNS Default Domain Name

Functions	• To set the DNS default domain name.
Use	• To enter the DNS default domain name.
Setting/ Procedure	*1.* Touch [DNS Default Domain Name]. *2.* Enter the DNS Default Domain Name on the on-screen keyboard, and touch [OK].

(11) DNS Search Domain Name1 to 3

Functions	• To set the DNS search domain name.
Use	• To enter the DNS search domain name.
Setting/ Procedure	*1.* Touch [DNS Search Domain Name 1 to 3]. *2.* Enter the DNS domain name on the on-screen keyboard, and touch [OK].

(12) Dynamic DNS Setting

Functions	• To set whether or not to enable the dynamic DNS setting
Use	• To set the dynamic DNS.
Setting/ Procedure	• The default setting is Disable. Enable "Disable"

(13) Host Name

Functions	• To set the DNS host name.
Use	• To enter the DNS host name.
Setting/ Procedure	*1.* Touch [DNS Host Name]. *2.* Enter the DNS host name on the screen key board, and touch [OK].

(14) IP Filtering

Functions	• To set the IP filtering.
Use	• To set whether to receive IP address within the specified range of the value.
Setting/ Procedure	<Permit Access> *1.* Select Enable or “Disable” on [Permit Access]. *2.* Select range Set 1 to Set 5, and input address using the 10-key pad. *3.* Touch [OK]. <Deny Access> *1.* Touch [Deny Access]. *2.* Select Enable or “Disable” on [Deny Access]. *3.* Select range Set 1 to Set 5, and enter address using the 10-key pad. *4.* Touch [OK].

(15) RAW Port No.

Functions	• To set the RAW port No.
Use	• To set the RAW port number for the printer. • Several data can be accepted at the same time by selecting several ports.
Setting/ Procedure	*1.* Select the necessary port number. *2.* Select to use or not to use. *3.* When using the selected port, press the Clear key to clear the value, and enter the RAW port number using the 10-key pad. *4.* Touch [OK].

B. NetWare Setting

- It will not be displayed excluding [Ethernet Frame Type] when optional image controller IC-406 is mounted.

(1) IPX Setting

Functions	• To enable or disable the NetWare (IPX) setting.
Use	• To use NetWare (IPX) setting.
Setting/ Procedure	• The default setting is ON. “ON” OFF

(2) Ethernet Frame Type

Functions	• To set the ethernet frame type.
Use	• To specify the frame type for transmission.
Setting/ Procedure	• The default setting is Auto Detect. “Auto Detect” 802.2 802.3 Ethernet II 802.3SNAP

(3) User Authentication Setting

Functions	• To set whether or not to use the user authentication setting.
Use	• To conduct user authentication in netware environment.
Setting/ Procedure	• The default setting is ON. “ON” OFF

(4) Netware Print Mode

Functions	• To set the NetWare print mode.
Use	• To change the NetWare print mode.
Setting/ Procedure	• The default setting is PServer. OFF PServer Nprinter/Rprinter

(5) Status

Functions	• To display NetWare status.
Use	• To check NetWare status.
Setting/ Procedure	*1.* Touch [Status]. *2.* Touch up/down arrow keys to select the server to check. *3.* Check the NetWare status.

(6) Print Server Name/Print Server Password

Functions	• To set the print server name and print server password.
Use	• To enter the print server name or the print server password.
Setting/ Procedure	*1.* Touch [Print Server name] or [Print Server Password]. *2.* Enter the print server name or the print server password (up to 63 characters) using the on-screen keyboard, and touch [OK].

(7) Polling Interval

Functions	• To set the polling interval.
Use	• To set the interval to search the print queue.
Setting/ Procedure	*1.* Press the Clear key. *2.* Enter the polling interval between 1 and 65535 using the 10-key pad.

(8) NDS/Bindery Setting

Functions	• To set whether to enable or disable the bindery setting when using NetWare4.x model and after.
Use	• To enable the bindery service.
Setting/ Procedure	• The default setting is NDS. “NDS” NDS&Bindery

(9) File Server Name

Functions	• To set the file server name.
Use	• To set the full server name for the print server to logon.
Setting/ Procedure	*1.* Touch [File Server Name]. *2.* Enter the File server name (up to 47 characters) on the on-screen keyboard, and touch [OK].

(10) NDS Context Name

Functions	• To set the NDS context name (context name to register NDS print server)
Use	• To set the NDS context name.
Setting/ Procedure	*1.* Touch [NDS Context name]. *2.* Enter the NDS context name (up to 191 characters) on the on-screen keyboard, and touch [OK].

(11) NDS Tree Name

Functions	• To set the NDS tree name (name to login)
Use	• To set the NDS tree name.
Setting/ Procedure	*1.* Touch [NDS Tree Name]. *2.* Enter the NDS tree name (up to 63 characters) on the on-screen keyboard, and touch [OK].

(12) Printer Name

Functions	• To set the printer name.
Use	• To set the printer name.
Setting/ Procedure	*1.* Touch [Printer Name]. *2.* Enter the printer name (up to 63 characters) on the on-screen keyboard, and touch [OK].

(13) Printer Number

Functions	• To set the printer number.
Use	• To set the printer number.
Setting/ Procedure	*1.* Touch [Auto] and cancel the reverse display. *2.* Press the Clear key. *3.* Enter the number between 0 and 254 using the 10-key pad.

C. http Server Setting

(1) http Server Setting

Functions	• To set whether or not to use the http server setting.
Use	• Not to use the http server setting.
Setting/ Procedure	• The default setting is ON. "ON" OFF

(2) PSWC Setting

Functions	• To set whether to use the PageScope Web Connection.
Use	• Not to use the PageScope Web Connection.
Setting/ Procedure	• The default setting is ON. "ON" OFF

(3) IPP Setting

Functions	• To set whether to enable or disable IPP (Internet Printing Protocol) setting.
Use	• To disable IPP setting.
Setting/ Procedure	• The default setting is ON. "ON" OFF

(4) Accept IPP job

Functions	• To set whether to allow or restrict the IPP job.
Use	• To restrict the IPP job
Setting/ Procedure	• The default setting is ON. "ON" OFF

(5) Support Operation

Functions	• To set the operation support information.
Use	• For the response setting to see if IPP transmission supports each function.
Setting/ Procedure	*1.* Touch [Support Operation]. *2.* Set "ON" or OFF for each item.

(6) Printer Information

Functions	• To set the printer information.
Use	• To set the printer information.
Setting/ Procedure	*1.* Touch [Printer Information]. *2.* Enter the printer name, printer location, and printer information on the on-screen keyboard. *3.* Touch [Print URI] to check the printer URI information.

(7) IPP Authentication

Functions	• To set whether or not to use the IPP authentication setting.
Use	• To conduct IPP authentication.
Setting/ Procedure	• The default setting is ON. "ON" OFF

(8) Authentication Method

Functions	• To set the authentication method for IPP authentication.
Use	• To change the authentication method when conducting IPP authentication.
Setting/ Procedure	• The default setting is requesting-user-name. requesting-user-name basic digest

(9) User Name

Functions	• To set the User name for IPP authentication.
Use	
Setting/ Procedure	*1.* Touch [User Name]. *2.* Enter the user name on the on-screen keyboard, and touch [OK].

(10) Password

Functions	• To set the password for IPP authentication.
Use	
Setting/ Procedure	*1.* Touch [Password]. *2.* Enter the password on the on-screen keyboard, and touch [OK].

(11) realm

Functions	• To set the realm for identifying the authentication setting for IPP authentication.
Use	
Setting/ Procedure	*1.* Touch [realm]. *2.* Enter the realm on the on-screen keyboard, and touch [OK].

D. FTP Setting

- It will not be displayed excluding [FTP Server] when optional image controller IC-406 is mounted.

(1) Proxy Server Address

Functions	• To set the proxy server address.
Use	• To enter the proxy server address.
Setting/ Procedure	• IP address version 4 format [0 to 255] . [0 to 255] . [0 to 255] . [0 to 255] *1.* Touch [Host Address]. *2.* Select [IP Address Input] to enter the IP address. *3.* Select [Host Name Input] to enter the host name.

(2) Proxy Port Number

Functions	• To set the proxy server port number.
Use	• To enter the proxy server port number.
Setting/ Procedure	• Press the Clear key. • Enter the proxy server port number between 1 and 65535 using the 10-key pad.

(3) Port No.

Functions	• To set the port number to be used for transmission with FTP server.
Use	• To enter the port number to be used for transmission with FTP server.
Setting/ Procedure	*1.* Touch [Input]. *2.* Press the Clear key. *3.* Enter the proxy server port number between 1 and 65535 using the 10-Kay pad.

(4) Connection Timeout

Functions	• To set the timeout period for connecting to FTP server.
Use	• To change the timeout period for connecting.
Setting/ Procedure	*1.* Touch [Input]. *2.* Press the Clear key. *3.* Enter the connecting timeout period between 5 and 300 using the 10-key pad.

(5) FTP Tx

Functions	• To set whether to use “Scan to FTP (FTP transmission)” or not.
Use	• Not to use “Scan to FTP (FTP transmission).”
Setting/ Procedure	• The default setting is ON. “ON” OFF

(6) FTP Server

Functions	• To set whether to use FTP server or not.
Use	• Not to use FTP server.
Setting/ Procedure	• The default setting is ON. “ON” OFF **NOTE** • **[ON] cannot be selected when the following setting is set to “ON”.** **[Administrator Setting] → [Security Setting] → [Enhanced Security Mode]**

E. SMB Setting

(1) Print Setting

- It will not be displayed when the optional image controller IC-406 is mounted.

Functions	• To set whether to use SMB port or not in printer mode.
Use	• Not to use SMB port in printer mode.
Setting/ Procedure	• The default setting is ON. “ON” OFF

(2) NetBIOS Name

- It will not be displayed when the optional image controller IC-406 is mounted.

Functions	• To set NetBIOS name.
Use	• To set NetBIOS name.
Setting/ Procedure	*1.* Touch [NetBIOS Name]. *2.* Enter the NetBIOS name (up to 15 characters) on the on-screen keyboard, and touch [OK].

(3) Print Service Name

- It will not be displayed when the optional image controller IC-406 is mounted.

Functions	• To set the print service name.
Use	• To set the print service name.
Setting/ Procedure	*1.* Touch [Print Service Name]. *2.* Enter the print service name (up to 13 characters) on the on-screen keyboard, and touch [OK].

(4) Workgroup

- It will not be displayed when the optional image controller IC-406 is mounted.

Functions	• To set the workgroup.
Use	• To set the workgroup.
Setting/ Procedure	*1.* Touch [Workgroup]. *2.* Enter the workgroup (up to 15 characters) on the on-screen keyboard, and touch [OK].

(5) WINS Setting

- It will not be displayed when the optional image controller IC-406 is mounted.

Functions	• To set whether or not to enable the WINS setting.
Use	• To use the WINS (Windows Internet Name Service) setting is necessary. • By using the WINS, the traffic by broadcast can be reduced, and the communication becomes available with the network where broadcast does not reach.
Setting/ Procedure	• The default setting is ON. "ON" OFF

(6) Auto Obtain Setting

- It will not be displayed when the optional image controller IC-406 is mounted.

Functions	• To set whether or not to enable the auto obtaining of the WINS server address.
Use	• To acquire the WINS server address automatically. • To obtain the WINS server address from DHCP server. If there are more than on address settings, up to two can be acquired.
Setting/ Procedure	• The default setting is Enable. "Enable" Disable **NOTE** • **"Enable" cannot be set when [IP Address Setting Method] is set to "Auto Input".**

(7) WINS Server Address 1, 2

- It will not be displayed when the optional image controller IC-406 is mounted.

Functions	• To set the WINS server address.
Use	• To use when manually entering the WINS server address. • The primary address and the secondary address can be set. (The primary address has the priority during operation.)
Setting/ Procedure	• IP address version 4 format [0 to 255] . [0 to 255] . [0 to 255] . [0 to 255] *1.* Touch [WINS Server Address 1] or [WINS Server Address 2]. *2.* Enter the WINS server address.

(8) User Authentication (NTLM)

Functions	• To set whether or not to enable the user authentication setting by NTLM.
Use	• To use when conducting the user authentication by NTLM (NT LAN Manager).
Setting/ Procedure	• The default setting is ON. "ON" OFF

(9) SMB TX Setting

Functions	• To set whether or not to use the SMB transmission setting.
Use	• To use when setting the SMB transmission setting.
Setting/ Procedure	• The default setting is ON. "ON" OFF

(10) NTLM Setting

Functions	• To set the NTLM version for the user authentication.
Use	• To use when changing the NTLM version for user authentication. • NTLM has v1 and v2. Select the version which suits the network environment.
Setting/ Procedure	• The default setting is v1. "v1" v2 v1/v2

F. AppleTalk Setting

- It will not be displayed when the optional image controller IC-406 is mounted.

(1) AppleTalk Setting

Functions	• To set whether to enable or disable the AppleTalk setting.
Use	• To use AppleTalk setting.
Setting/ Procedure	• The default setting is OFF. ON "OFF"

(2) Printer Name

Functions	• To set the printer name displayed on the AppleTalk network.
Use	• To set the printer name displayed on the AppleTalk network.
Setting/ Procedure	*1.* Touch [Printer Name]. *2.* Enter the printer name (up to 31 characters) on the on-screen keyboard, and touch [OK].

(3) Zone Name

Functions	• To set the zone name connected with AppleTalk network.
Use	• To set the zone name connected with AppleTalk network.
Setting/ Procedure	*1.* Touch [Zone Name]. *2.* Enter the zone name (up to 31 characters) on the on-screen keyboard, and touch [OK].

(4) Current Zone

Functions	• To display the current zone on AppleTalk network.
Use	• To check the current zone on the AppleTalk network.

G. LDAP Setting

(1) Enabling LDAP

Functions	• To set whether to enable or disable the LDAP function.
Use	• To use LDAP function.
Setting/ Procedure	• The default setting is OFF. ON “OFF”

(2) Setting Up LDAP

- Registration and/or setting concerning the LDAP server can be conducted.
- Touch [Setting Up LDAP], and select the optional blank key to register and/or set.

<LDAP Server Name>

Functions	• Set the LDAP server name.
Use	
Setting/ Procedure	*1.* Touch [Server Name]. *2.* Enter the server name (up to 32 one-byte characters) on the on-screen keyboard, and touch [OK].

<Max. Search Results>

Functions	• To set the Max. results of address for LDAP search.
Use	• To change the Max. results of address for LDAP search.
Setting/ Procedure	*3.* Touch [Max. Search Results]. *4.* Press the Clear key. *5.* Enter the Max. Search result numbers between 5 and 1000 using the 10-key pad.

<Timeout>

Functions	• To set the Max. timeout period for LDAP search.
Use	• To change the Max. timeout period for LDAP search.
Setting/ Procedure	*1.* Touch [Timeout]. *2.* Press the Clear key. *3.* Enter the timeout period between 5 and 300 using the 10-key pad.

<Initial Setting for Search Details>

Functions	• To set the initial items for search conditions in LDAP detail search.
Use	• To set the initial items for search conditions in LDAP detail search.
Setting/ Procedure	*1.* Touch [Initial Setting for Search Details]. *2.* Touch the key about condition for each search item, and select the condition.

<Check Connection>

- It will not be displayed when [Enabling LDAP] is set to “OFF”.
- It will not be displayed when the following is set to “Restrict”.
  [Administrator Setting] → [Security Setting] → [Security Details] → [Manual Destination Input]

Functions	• To check the connection with the LDAP server which has been set.
Use	
Setting/ Procedure	*1.* Touch [Check Connection].

<Reset All Settings>

Functions	• To return the contents registered in the LDAP server to what they were prior to the shipping.
Use	
Setting/ Procedure	*1.* Touch [Reset All Settings]. *2.* Check the message and touch [Yes].

<Server Address>

Functions	• To set the LDAP server address.
Use	• To enter LDAP server address.
Setting/ Procedure	• IP address version 4 format [0 to 255] . [0 to 255] . [0 to 255] . [0 to 255] *1.* Touch [Server Address]. *2.* Enter the server name (up to 32 one-byte characters) on the on-screen keyboard, and touch [OK].

<Search Base>

Functions	• To set the directory path for LDAP server.
Use	• To enter the directory path for LDAP server.
Setting/ Procedure	*1.* Touch [Search Base]. *2.* Enter the search base (up to 255 characters) on the on-screen keyboard, and touch [OK].

<Enable SSL>

Functions	• To set whether to use SSL (data encryption) for connecting to LDAP server.
Use	• To use SSL (data encryption) for connecting to LDAP server.
Setting/ Procedure	• The default setting is OFF. ON "OFF"

<Port No.>

Functions	• To set the LDAP server port number.
Use	• To enter the LDAP server port number.
Setting/ Procedure	*1.* Touch [Input]. *2.* Press the Clear key. *3.* Enter the port number between 1 and 65535 using the 10-Kay pad.

<Port Number (SSL)>

Functions	• To set the port number for LDAP server when using SSL.
Use	• To enter the port number for LDAP server when using SSL.
Setting/ Procedure	*1.* Touch [Input]. *2.* Press the Clear key. *3.* Enter the port number between 1 and 65535 using the 10-Kay pad.

<Authentication Method>

Functions	• To set the authentication method to logon to LDAP server.
Use	• To change the authentication method to logon to LDAP server. anonymous : User name and password are not necessary (Dynamic authentication will be invalid when anonymous is selected.) Simple : Simple method which needs the user name and the password Digest-MD5 : Method available with normal LDAP server. When failing to authenticate with Digest-MD5, it automatically switches to CRAM-MD5. GSS-SPNEGO : Method available with Windows active directory (Kerberos authentication). NTLM (v1) : Standard user authentication format used for Windows NT, etc. NTLM (v2) : Standard user authentication format used for Windows NT, etc. It has been applied to the Windows NT4.0 SP4 and later versions. Its security has been enhanced compared to v1.
Setting/ Procedure	• The default setting is anonymous. "anonymous" Simple Digest-MD5 GSS-SPNEGO NTLM v1 NTLM v2

<Select Server Authentication Method>

Functions	• To set the authentication system when conducting LDAP server authentication.
Use	• To use when changing the server authentication system. Use Set Value : It conducts authentication with the setting value set by [LDAP Server Registration]. Use User Authentication ID and Password : It conducts authentication with the registration data for the copier's user authentication. Dynamic Authentication : It conducts authentication by dynamic authentication.
Setting/ Procedure	• The default setting is Use Set Value. "Use Set Value" Use User Authentication ID and Password Nprinter/Rprinter

<Use Referral>

Functions	• To set whether or not to use the referral setting.
Use	• To use when tracing the server with referral at the time of LDAP connection.
Setting/ Procedure	• The default setting is ON. "ON" OFF

<Login Name>

Functions	• To set the login name to connect to LDAP server.
Use	• To set the login name to connect to LDAP server.
Setting/ Procedure	*1.* Touch [Login Name]. *2.* Enter the logon name (up to 255 characters) on the on-screen keyboard, and touch [OK]. **NOTE** • **The setting is not available when authentication method is set to anonymous.**

<Password>

Functions	• To set the password for connecting to LDAP server.
Use	• To set the password for connecting to LDAP server.
Setting/ Procedure	• Touch [Password]. • Enter the password (up to 63 characters) on the on-screen keyboard, and touch [OK]. **NOTE** • **The setting is not available when authentication method is set to anonymous.**

<Domain Name>

Functions	• To set the domain name for connecting to LDAP server.
Use	• To set the domain name for connecting to LDAP server.
Setting/ Procedure	*1.* Touch [Domain Name]. *2.* Enter the domain name (up to 64 characters) on the on-screen keyboard, and touch [OK].

(3) Default LDAP Server Setting

Functions Use	• To set the server to be used as the default when searching LDAP
Setting/ Procedure	*1.* Touch [Default LDAP Server Setting]. *2.* Select the optional server.

H. E-Mail Setting

(1) E-Mail TX (SMTP)

<E-Mail TX Setting>

Functions	• To set whether to enable or disable the e-mail transmission setting.
Use	• To disable the e-mail transmission setting.
Setting/ Procedure	• The default setting is ON. "ON" OFF

<Scan to E-Mail>

- It will not be displayed when [E-Mail TX Setting] is set to "Restrict".

Functions	• To set whether or not to transfer scanned data by e-mail.
Use	• To use when not transferring scanned data by e-mail.
Setting/ Procedure	• The default setting is Allow. "Allow" Restrict

<E-Mail Notification>

- It will not be displayed when [E-Mail TX Setting] is set to "Restrict".

Functions	• To set whether or not to inform the status by e-mail.
Use	• To use when not informing the status by e-mail.
Setting/ Procedure	• The default setting is Allow. "Allow" Restrict

<Meter Count Notification>

- It will not be displayed when [E-Mail TX Setting] is set to "Restrict".

Functions	• To set whether or not to inform the total counter by e-mail.
Use	• To use when not informing the total counter by e-mail.
Setting/ Procedure	• The default setting is Allow. "Allow" Restrict

<SMTP Server Address>

Functions	• To set the SMTP server address.
Use	• To enter the SMTP server address.
Setting/ Procedure	• SMP server address version 4 format [0 to 255] . [0 to 255] . [0 to 255] . [0 to 255] *1.* Touch [Host Address]. *2.* Select [IP Address Input], and enter IP address. *3.* Select [Host Name Input], and enter the host name.

<Binary Division>

Functions	• To set whether to carry out binary division for data to be transmitted
Use	• Not to carry out binary division for data to be transmitted
Setting/ Procedure	• The default setting is ON. "ON" OFF

<Divided Mail Size>

Functions	• To set the dividing size when carrying out the binary division for data to be transmitted.
Use	• To change the dividing size of the data.
Setting/ Procedure	*1.* Press the Clear key. *2.* Enter the dividing mail size between 100 and 15000 (in 100 increments) using the 10-key pad.

<Connection Timeout>

Functions	• To set the timeout period for connection in transmitting e-mail to SMTP server.
Use	• To change the timeout period for connection in transmitting e-mail to SMTP server.
Setting/ Procedure	• Select the timeout period using [+] / [-] keys. • The default setting is 60 sec. "60 sec." (30 to 300, in 30 sec. increments)

<Server Capacity>

Functions	• To set the Max. capacity per mail which SMTP server can receive.
Use	• To change the Max. capacity per mail which SMTP server can receive.
Setting/ Procedure	• The default setting is No Limit. "No Limit" (1 to 100)

<SSL Setting>

Functions	• To set whether or not to use SSL when sending an e-mail.
Use	• To use when sending an e-mail using SSL.
Setting/ Procedure	• The default setting is OFF. ON "OFF"

<Port Number (SSL)>

Functions	• To set the port number when using SSL.
Use	• To use for entering the port number when using SSL.
Setting/ Procedure	*1.* Touch [Input]. *2.* Touch the Clear key. *3.* Enter the port number (SSL) between 1 and 65535 using the 10-key pad.

<Port Number>

Functions	• To set the port number for transmission with SMTP server.
Use	• To enter the port number for transmission with SMTP server.
Setting/ Procedure	*1.* Touch [Input]. *2.* Press the Clear key. *3.* Enter the port number between 1 and 65535 using the 10-key pad.

<Detail Setting: Authentication Setting: POP Before SMTP>

Functions	• To set whether or not to enable the POP Before SMTP authentication.
Use	• To use when conducting POP Before SMTP authentication.
Setting/ Procedure	• The default setting is OFF. ON "OFF"

<Detail Setting: Authentication Setting: SMTP Authentication>

Functions	• To set whether or not to enable SMTP authentication.
Use	• To use when conducting SMTP authentication.
Setting/ Procedure	• The default setting is OFF. ON "OFF" • When set to "ON", enter the [User ID], [Password] and [Domain Name].

<Detail Setting: POP Before SMTP Time>

Functions	• To set the time necessary for POP Before SMTP authentication.
Use	• To change the time necessary for POP Before SMTP authentication.
Setting/ Procedure	*1.* Touch [Input]. *2.* Press the Clear key. *3.* Enter the time for POP Before SMTP between 0 and 60 using the 10-key pad.

(2) E-Mail RX (POP)

<E-Mail RX Setting>

Functions	• To set whether to enable or disable the e-mail reception setting.
Use	• To disable the e-mail reception setting.
Setting/ Procedure	• The default setting is ON. "ON" OFF

<POP Server Address>

Functions	• To set the POP server address.
Use	• To enter the POP server address.
Setting/ Procedure	• SMTP server address version 4 format [0 to 255] . [0 to 255] . [0 to 255] . [0 to 255] *1.* Touch [Host Address]. *2.* Select [IP Address Input], and enter the IP address. *3.* Select [Host Name Input] to enter the host name, and touch [OK]. *4.* Enter the login name (Up to 63 characters). *5.* Enter the password (Up to 15 characters).

<SSL Setting>

Functions	• To set whether or not to use SSL when receiving an e-mail.
Use	• To use when receiving an e-mail which used SSL.
Setting/ Procedure	• The default setting is OFF. ON "OFF"

<Port Number (SSL)>

Functions	• To set the port number when using SSL.
Use	• To enter the port number when using SSL.
Setting/ Procedure	*1.* Touch [Input]. *2.* Touch the Clear key. *3.* Enter the port number (SSL) between 1 and 65535 using the 10-key pad.

<Detail Setting: APOP Authentication>

Functions	• To set whether to use APOP authentication
Use	• To use APOP authentication
Setting/ Procedure	• The default setting is OFF. ON "OFF"

<Detail Setting: Port No.>

Functions	• To set the port No. for transmitting with POP server.
Use	• To enter the port No. for transmitting with POP server.
Setting/ Procedure	*1.* Press the Clear key. *2.* Enter the port No. between 1 and 65535 using the 10-key pad.

<Detail Setting: Connection Timeout>

Functions	• To set the timeout period for connection in receiving e-mail to POP server.
Use	• To set the timeout period of connection in receiving e-mail to POP server.
Setting/ Procedure	• Select the timeout period of connection using +30/-30 keys.

I. Detail Setting

(1) Device Setting

<MAC Address>

Functions	• To display the MAC address of the machine.
Use	• To check the MAC address of the machine.
Setting/ Procedure	• The address cannot be changed.

<Network Speed>

Functions	• To set the network speed.
Use	• To set the specific network speed.
Setting/ Procedure	• The default setting is Auto. "Auto" 10Mbps Full Duplex 10Mbps Half Duplex 100Mbps Full Duplex 100Mbps Half Duplex **NOTE** • **When Network speed setting is changed, turn off the main power switch and turn it on again more than 10 seconds after.**

(2) Time Adjustment Setting

<NTP Setting>

Functions	• To set whether to enable or disable the NTP setting.
Use	• To synchronize the time between the server and the client.
Setting/ Procedure	• The default setting is OFF. ON "OFF"

<NTP Server Address>

Functions	• To set the NTP server address.
Use	• To enter the NTP server address.
Setting/ Procedure	• IP Address version 4 format [0 to 255] . [0 to 255] . [0 to 255] . [0 to 255] *1.* Touch [Host Address]. *2.* Select [IP Address Input], and enter the IP address. *3.* Select [Host name Input], and enter the host name.

<Port No.>

Functions	• To set the port No. for transmitting with NTP server.
Use	• To enter the port No. for transmitting with NTP server.
Setting/ Procedure	*1.* Press the Clear key. *2.* Enter the port number between 1 and 65535 using the 10-key pad.

(3) Status Notification Setting

<Notification Address Setting>

Functions	• To set the e-mail address for notifying the machine condition.
Use	• To set the e-mail address for notifying the machine condition.
Setting/ Procedure	*1.* Touch [E-mail Address Edit]. *2.* Enter the e-mail address (up to 320 characters) on the on-screen keyboard, and touch [OK].

<Notification Item Setting>

Functions	• To set the item for notifying the machine condition with e-mail.
Use	• To set the item for notifying the machine condition with e-mail.
Setting/ Procedure	*1.* Select the item to be notified and touch [ON]. *2.* Touch [OK].

<Notification Time Setting>

Functions	• To set the time necessary for notifying the machine condition by e-mail.
Use	• To change the time necessary for notifying the machine condition by e-mail.
Setting/ Procedure	*1.* Press the Clear key. *2.* Enter the time for notifying between 1 and 10 using the 10-key pad.

(4) Total Counter Report Setting

<Set Schedule>

Functions	• To set the schedule for informing the total counter value.
Use	• To use when informing the total counter value by e-mail regularly. • Two different schedules can be set for reporting.
Setting/ Procedure	*1.* Touch [Schedule 1] or [Schedule 2]. *2.* Select the reporting cycle from [Daily], [Weekly] or [Monthly]. *3.* When selecting [Daily] for the reporting cycle, set the Interval of day(s). *4.* When selecting [Weekly] for the reporting cycle, set the Interval of week(s) and day of the Week. *5.* When selecting [Monthly] for the reporting cycle, set the Interval of month(s) and date of the month.

<Set Notification Addresses>

Functions Use	• To set the e-mail address for reporting the total counter value. • Up to three e-mail addresses can be set. • It can be selected whether to apply the schedule of the [Set Schedule] to each address.
Setting/ Procedure	*1.* Touch [Address 1], [Address 2] or [Address 3]. *2.* Touch [E-Mail Address Edit]. *3.* Enter the e-mail address (up to 320 one-byte characters) on the on-screen keyboard, and touch [OK]. *4.* Touch [Set Schedule]. *5.* Select ON/OFF for each schedule.

<Device Nickname>

Functions Use	• To set the device nickname for identifying the copier when reporting the total counter.
Setting/ Procedure	*1.* Touch [Device Nickname]. *2.* Enter the model name (up to 20 one-byte characters) on the on-screen keyboard, and touch [OK].

<Send Now>

Functions Use	• To transfer the current total counter value to the set address.

(5) PING Confirmation

Functions	• To set the TCP/IP network diagnosis by PING.
Use	• To check the condition of TCP/IP network.
Setting/ Procedure	*1.* Touch [Host Address] for PING transmission. *2.* Select [IP Address Input] to enter IP address. *3.* Select [Host Name Input] to enter the host name. *4.* Touch [Check Connection] key to check the connection.

(6) SLP Setting

- It will not be displayed when the optional image controller IC-406 is mounted.

Functions	• To set whether to use SLP or not.
Use	• Not to use SLP (Service Location Protocol). Device search will be available with TWAIN by setting SLP enable.
Setting/ Procedure	• The default setting is Enable. "Enable" Disable

(7) LPD Setting

Functions	• To set whether to use LPD during printing or not.
Use	• Not to use LPD during printing.
Setting/ Procedure	• The default setting is Enable. "Enable" Disable

(8) Prefix/Suffix Setting

<ON/OFF Setting>

Functions	• To set whether to add prefix or suffix to the address when calling or entering an address.
Use	• To add prefix or suffix to the address.
Setting/ Procedure	• The default setting is OFF. ON "OFF"

<Prefix/Suffix Setting>

Functions	• To register or change the prefix or suffix. • Eight types of prefix and suffix can be added. Prefix: Letters added to the top of the text (header part) Suffix: Letters added to the bottom of the text (footer part)
Use	• To register or change the address displayed for prefix or suffix.
Setting/ Procedure	• Available number to be registered as prefix is up to 20 characters. • Available number to be registered as suffix is up to 64 characters.

(9) Action for Invalid Certificate

Functions Use	• To set how to process the job when SSL certificate becomes invalid.
Setting/ Procedure	• The default setting is Continue. "Continue" Delete the Job

J. SNMP Setting

- It will not be displayed when the optional image controller IC-406 is mounted.

(1) SNMP Setting

Functions	• To set whether to use SNMP (Simple Network Management Protocol) or not. • To set the SNMP version to be used.
Use	• Not to use SNMP. • To readout management information base and to enter community name for writing.
Setting/ Procedure	• The default setting is ON. "ON" OFF • To individually set whether or not to use SNMP v1/v2c (IP), SNMP v3 (IP), and SNMP v1 (IPX). • The default setting is ON. "ON" OFF

(2) UDP Port Number

Functions Use	• To set the UDP standby port number which is used for SNMP (IP).
Setting/ Procedure	*1.* Touch the Clear key. *2.* Enter the port number between 1 and 65535 using the 10-key pad.

(3) SNMP v1/v2c Setting

Functions	• To conduct setting when using SNMP v1/v2c.
Use	• To use when changing write setting. • To use when entering the community name for reading the Management Information Base (MIB) and writing to it.
Setting/ Procedure	<Write Setting> • The default setting is Enable. "Enable" Disable **NOTE** • **[Enable] cannot be selected when the following setting is set to "ON". [Administrator Setting] → [Security Setting] → [Enhanced Security Mode]** Read Community Name: Enter the read community name. Write Community Name: Enter the write community name.

(4) SNMP v3 Setting

<Context Name>

Functions	• Set the context name which is used for SNMP v3.
Use	
Setting/ Procedure	*1.* Touch [Name]. *2.* Enter the context name (up to 64 characters) on the on-screen keyboard, and touch [OK].

<Discovery User>

Functions	• To set whether or not to enable the discovery authority user which is used for SNMP v3.
Use	
Setting/ Procedure	• The default setting is Enable. "Enable" Disable

<Discovery User Name>

Functions	• To set the name of the discovery authority Users which is used for SNMP v3.
Use	
Setting/ Procedure	*1.* Touch [Name]. *2.* Enter the discovery user name (up to 32 characters) on the on-screen keyboard, and touch [OK]. **NOTE** • **The user name same with the read user name or the write user name cannot be set.**

<Read User Name>

Functions Use	• To set the read-only user name used for SNMP v3.
Setting/ Procedure	*1.* Touch [Name]. *2.* Enter the read user name (up to 32 characters) on the on-screen keyboard, and touch [OK]. **NOTE** • **The user Name same with the discovery user name cannot be used.**

<Security Level>

Functions	• To set the security level of the read-only user used for SNMP v3.
Use	• To use when changing the security level of the read-only user. Authentication OFF : No authentication will be conducted when the read-only user accesses. Auth Password : Conducts authentication only for the authentication password when the read-only user accesses. Auth Password/Priv Password : Conducts authentication by authentication password and privacy password when read-only User accesses.
Setting/ Procedure	• The default setting is Auth Password/Priv Password. Authentication OFF Auth Password "Auth Password/Priv Password"

<Read User Password>

Functions Use	• To set the Authentication password for the read-only User which is used for SNMP v3.
Setting/ Procedure	*1.* Touch [Auth Password] or [Priv Password]. *2.* Enter the password (up to 32 characters) on the on-screen keyboard, and touch [OK].

<Write User Name>

Functions Use	• To set the name of the reading/writing authority user which is used for SNMP v3.
Setting/ Procedure	*1.* Touch [Name]. *2.* Enter the write user name (up to 32 characters) on the on-screen keyboard, and touch [OK]. **NOTE** • **The user name same with the discovery use name cannot be used.**

<Security Level>

Functions	• To set the security level for the reading/writing authority user which is used for SNMP v3.
Use	• To use for changing the security level of the reading/writing authority user. Authentication OFF : Authentication will not be conducted when reading/writing authority user accesses. Auth Password : Conducts authentication only with authentication password when reading/writing authority user accesses. Auth Password/Priv Password : Conducts authentication by authentication password and privacy password when reading/writing authority user accesses.
Setting/ Procedure	• The default setting is Auth Password/Priv Password. Authentication OFF Auth Password "Auth Password/Priv Password" **NOTE** • **[Authentication OFF] cannot be selected when the following setting is set to "ON".** **[Administrator Setting] → [Security Setting] → [Enhanced Security Mode]**

<Write User Password>

Functions	• To set the authentication password for reading/writing authority user which is used for SNMP v3.
Use	
Setting/ Procedure	*1.* Touch [Auth Password] or [Priv Password]. *2.* Enter the password (up to 32 characters) on the on-screen keyboard, and touch [OK].

K. Bonjour Setting

- "Bonjour" is an alternative network technology to AppleTalk. It automatically detects and identifies the network only by physically connecting to the network.
  The name "Rendezvous" has been changed for Mac OS X 10.4 and later version.
- It will not be displayed when the optional image controller (IC-406) is mounted.

(1) Bonjour Setting

Functions	• To set whether or not to use the Bonjour setting.
Use	• To use when operating under the Bonjour service environment.
Setting/ Procedure	• The default setting is Enable. "Enable" Disable

(2) Bonjour Name

Functions	• To set the Bonjour name.
Use	• To set the name for identifying over the Bonjour network.
Setting/ Procedure	*1.* Touch [Bonjour Name]. *2.* Enter the Bonjour name (up to 64 characters) on the on-screen keyboard, and touch [OK].

L. TCP Socket Setting

(1) TCP Socket Setting

Functions	• To set whether or not to set the TCP socket.
Use	• To use when using the application, etc. for TCP socket transmission.
Setting/ Procedure	• The default setting is ON. "ON" OFF

(2) Port Number

Functions	• To set the port number for TCP socket transmission.
Use	• To be used when entering the port number used for TCP socket transmission.
Setting/ Procedure	*1.* Touch the Clear key. *2.* Enter the port number between 1 and 65535 using the 10-key pad.

(3) TCP Socket (ASCII Mode)

Functions	• To set whether or not to set the TCP socket for ASCII mode.
Use	• To use when using the application, etc. for TCP socket transmission by ASCII mode.
Setting/ Procedure	• The default setting is ON. "ON" OFF

(4) Port Number (ASCII Mode)

Functions	• To set the port number which is used for TCP socket transmission by ASCII mode.
Use	• To use when entering the port number for TCP socket transmission by ASCII mode.
Setting/ Procedure	*1.* Touch the Clear key. *2.* Enter the port number between 1 and 65535 using the 10-key pad.

(5) TCP Socket (SSL)

- It will be displayed when certificate is issued from PageScope Web Connection.

Functions	• To set whether or not to use TCP socket with SSL.
Use	• To use TCP socket with SSL.
Setting/ Procedure	• The default setting is ON. "ON" OFF

(6) Port Number (SSL)

- It will be displayed when certificate is issued from PageScope Web Connection.

Functions	• To set the port number when using SSL.
Use	• To enter the port number when using SSL.
Setting/ Procedure	*1.* Touch [Input]. *2.* Touch the Clear key. *3.* Enter the port number (SSL) between 1 and 65535 using the 10-key pad.

M. Network Fax Setting

(1) Network Fax Function Settings

- It will not be displayed on the screen when all items are set to “OFF” in the following settings.
  [Service Mode] → [System 2] → [Network Fax Settings]

<IP Address Fax>

- Setting will be available only when [IP Address Fax] is set to “ON” in the following settings.
  [Service Mode] → [System 2] → [Network Fax Settings]
- It will not be displayed when the optional Image Controller (IC-406) is mounted.

Functions	• To set whether or not to use IP address fax function.
Use	• To use IP address fax function
Setting/ Procedure	• The default setting is OFF. ON “OFF”

<Internet Fax>

- Setting will be available only when [Internet Fax] is set to “ON” in the following settings.
  [Service Mode] → [System 2] → [Network Fax Settings]

Functions	• To set whether or not to use Internet fax function.
Use	• To use Internet fax function
Setting/ Procedure	• The default setting is OFF. ON “OFF”

(2) SMTP TX Setting

Functions	• To set SMTP TX when network fax function is being used.
Use	• To set SMTP TX port number and connecting time out period when network fax function is being used.
Setting/ Procedure	<Port Number> *1.* Touch [Input]. *2.* Enter the port number between 1 and 65535 using the 10-key pad. <Connection Timeout> *1.* Touch [Input]. *2.* Enter the connection timeout time between 30 and 300 (sec.) using the 10-key pad.

(3) SMTP RX Setting

Functions	• To set SMTP RX when network fax function is being used.
Use	• To use SMTP RX function when network fax function is being used. • To set SMTP RX port number and connecting time out period when network fax function is being used.
Setting/ Procedure	<SMTP RX> • The default setting is ON. "ON" OFF <Port No.> *1.* Touch [Input]. *2.* Enter the port number between 1 and 65535 using the 10-key pad. <Connection Timeout> *1.* Touch [Input]. *2.* Enter the connection timeout time between 5 and 1000 (sec.) using the 10-key pad.

8.6.6 Copier Setting

- It will not be displayed when the following setting shows that vendor 1 is mounted.
  [Service Mode] → [Billing Setting] → [Management Function Choice]

A. Auto Zoom (Platen)

Functions	• To set whether to function the auto zoom when the tray is selected with document set on the original glass (excepting at automatic paper selection mode.)
Use	• To function the auto zoom when the feed tray is selected.
Setting/ Procedure	• The default setting is OFF. ON "OFF"

B. Auto Zoom (ADF)

Functions	• To set whether to function the auto zoom when the feed tray is selected with document set on the ADF (excepting at automatic paper selection mode.)
Use	• To function the auto zoom when the tray is selected.
Setting/ Procedure	• The default setting is ON. "ON" OFF

C. Select Tray when APS OFF

Functions	• To set the tray to be used when APS is cancelled.
Use	• To set the tray (tray 1) for the default setting when cancelling APS.
Setting/ Procedure	• The default setting is Tray Before APS ON. "Tray Before APS ON" Default Tray

D. Select Tray for Insert Sheet

Functions Use	• To select the initial value for the tray for the cover sheet paper.
Setting/ Procedure	• The default setting is Tray 2.

E. Print Jobs During Copy Operation

Functions	• To set whether to receive printing jobs for print data or fax data during copy operation.
Use	• To restrict receiving printing jobs for print data or fax data during copy operation. Accept : Receives the print data or fax data and print Receive Only : Print data or fax data will be printed when the copy operation is finished
Setting/ Procedure	• The default setting is Accept. "Accept" Receive Only

8.6.7 Printer Setting

A. I/F Timeout

Functions	• To set the time until timeout of communication input / output.
Use	• To set longer time when timeout occurs according to the network condition.
Setting/ Procedure	• Settings have to be done separately for IEEE1284, USB, and network. • Each default setting is 60 sec. "60 sec" (10 to 1000)

B. Parallel I/F

Functions	• To set data transfer mode when parallel I/F has been used.
Use	• To change the two-way communication method for parallel interface.
Setting/ Procedure	• The default setting is ECP. Compatible Nibble "ECP"

C. IEEE 1284/USB

Functions	• To set the interface to be used when mounting the local I/F kit.
Use	• To be used when using the parallel interface.
Setting/ Procedure	• The default setting is USB. IEEE1284 "USB"

8.6.8 Fax Setting

- Settings are available only when the optional fax kit (FK-502) is mounted.
- It will not be displayed when the following setting is set to “ON”.
  [Administrator Setting] → [System Connection] → [Prefix/Suffix Auto Setting]

A. Header Information

Functions	• To register the name of the sender and fax ID which will be printed when transmitting fax.
Use	• To register or change the name of the sender and fax ID
Setting/ Procedure	*1.* Touch [Sender Name] and enter the name of the sender (up to 30 characters) on the on-screen keyboard. *2.* Enter Sender Fax No. (up to 20 characters) using the 10-key pad and [+], [Space] displayed on the screen. • Up to 20 sender names can be registered by touching [Sender Name Registration]. The registered sender name can be selected when transmitting fax.

2

B. Header/Footer Position

(1) Header Position

Functions	• To set the position to print the header when transmitting fax.
Use	• To change the position to print the header.
Setting/ Procedure	• The default setting is Outside Body Text. Inside Body Text “Outside Body Text” OFF

1 #### (2) To Name

- It will not be displayed on the screen when [Fax Target] is set to “US” or “HK” in the following settings.
  [Service Mode] → [System 1] → [Marketing Area]

Functions	• To set whether to print the information of TX destination (Registered name or Fax No.) when transmitting fax.
Use	• To print information of TX destination. (Registered name or Fax No.)
Setting/ Procedure	• The default setting is OFF. ON OFF

(3) Footer Position

Functions	• To set whether to print the footer when transmitting fax.
Use	• To print the footer when transmitting fax.
Setting/ Procedure	• The default setting is OFF. Inside Body Text Outside Body Text “OFF”

C. Telephone Line Settings

(1) Dialing Method

Functions	• To set the dialing method.
Use	• To change the dialing method. • The displays are different depending on the country.
Setting/ Procedure	• The default setting is PB. "PB" 10 pps **NOTE** • **The displays are different depending on the country.**

(2) Receive Mode

- It will not be displayed when the following setting shows that management device 2 is mounted.
  [Service Mode] → [Billing Setting] → [Management Function Choice]

Functions	• To set the fax reception mode.
Use	• To change to manual reception when using the remote reception function, etc. when connected to the external telephone.
Setting/ Procedure	• The default setting is Auto RX. "Auto RX" Manual RX

(3) Number of RX Call Rings

Functions	• To set the number of times to receive call rings.
Use	• To change the number of times of the fake ringback tone after it starts calling until it starts receiving.
Setting/ Procedure	• The default setting is 2 X. "2 X" (0 to 15)

(4) Number of Redials

Functions	• To set the number of redials.
Use	• To change the number of times to redial when the line is busy, etc. • The line which can be set up is different depending on the country.
Setting/ Procedure	• The default setting is 3 X. "3 X" (0 to 7) **NOTE** • **The line which can be set up is different depending on the country.**

(5) Redial Interval

Functions	• To set the interval for redialing.
Use	• To change the interval for redialing.
Setting/ Procedure	• The default setting is 3 min. "3 min" (1 to 15)

(6) Line Monitor Sound

Functions	• To set whether to output the line monitor sound from the speaker or not.
Use	
Setting/ Procedure	• The default setting is ON. "ON" OFF

(7) Line Monitor Sound Volume

Functions	• To set the volume of the speaker.
Use	• To change the volume of the speaker.
Setting/ Procedure	• Change the volume by touching the [Lower] or [Higher].

D. TX/RX Setting

(1) Duplex Print (RX)

- It will not be displayed when [Print Separate Fax Pages] is set to "ON".

Functions	• To set whether to carry out the duplex print for the received original when receiving fax.
Use	• To carry out the duplex print for the received original.
Setting/ Procedure	• The default setting is OFF. ON "OFF"

(2) Inch Paper Priority Over A4

Functions	• To set weather to use the inch paper priority when receiving fax.
Use	• To use the inch paper priority when receiving fax.
Setting/ Procedure	ON OFF **NOTE** • **The default setting is different depending on the country.**

(3) Print Paper Selection

Functions	• To set the priority for paper feed tray when receiving fax.
Use	• To change the priority for paper feed tray when receiving fax. Auto select : Selected automatically Priority Size : Printed on size with priority. When the size is not set, it will be printed on the closest size. Fixed Size : Printed only on the fixed size.
Setting/ Procedure	• The default setting is Auto Select. "Auto Select" Fixed Size Priority Size

(4) Print Paper Size

Functions	• To set the paper size to print the text when receiving fax.
Use	• To change the paper size for printing the received text. • The displays are different depending on the country. • To make the setting of [Print Paper Size] enable, set [Tray Selection for RX Print] to [Auto].
Setting/ Procedure	• The initial setting is A4. A3 B4 “A4” **NOTE** • **The displays are different depending on the country.**

(5) Incorrect User Box No. Entry

Functions	• To set the operation when the unregistered box number is entered.
Use	• To change the operation when the unregistered box number is entered.
Setting/ Procedure	• The default setting is Print. “Print” Show Error Message Auto Create User Box

(6) Tray Selection for RX Print

Functions	• To select the paper tray to be fixed when printing the received text.
Use	• To fix the paper tray when printing the received text.
Setting/ Procedure	• The default setting is Auto. • Items available for selection are different depending on the paper feed option mounted. “Auto” Tray 1 Tray 2 Tray 3 Tray 4

(7) Min. Reduction for RX Print

Functions	• To set the print magnification for received text.
Use	• To change the print magnification for received text.
Setting/ Procedure	• The default setting is 96. “96” (87 to 96, x1.0)

(8) Print Separate Fax Pages

- It will not be displayed when [Duplex print (RX)] is set to “ON”.

Functions	• To set whether to divide the original into pages when it is longer than the standard size.
Use	• To divide the original into pages when it is longer than the standard size.
Setting/ Procedure	• The default setting is OFF. ON “OFF”

(9) File After Polling TX

Functions	• To set whether to delete the original which polling transmission has been completed.
Use	• For not deleting the original which polling transmission has been completed.
Setting/ Procedure	• The default setting is Delete. "Delete" Save

(10) No. of Sets (RX)

Functions	• To set the number of copies to be printed with the received document.
Use	• To use when changing the number of copies to be printed with the received document.
Setting/ Procedure	• The default setting is 1 set. 1 to 10 set.

E. Function Setting

(1) Function ON/OFF Setting

<F Code TX>

Functions	• To set whether to use the F code transmission.
Use	• To cancel the F code transmission.
Setting/ Procedure	• The default setting is ON. "ON" OFF **NOTE** • **When the setting is changed, turn off the main power switch and turn it on again more than 10 seconds after.**

1 <Relay RX>

- It will be displayed when the following setting is set to "ON".
  [Service Mode] → [FAX] → [System] → [Display Setting] → [Relay]

Functions	• To set whether to use the relay RX function.
Use	• To use the machine as the relay delivery station during relay TX.
Setting/ Procedure	• The default setting is ON. "ON" OFF

<Relay Print>

- It will be displayed when the following setting is set to “ON”.
  [Service Mode] → [FAX] → [System] → [Display Setting] → [Relay]

Functions	• To set whether to use the relay print function.
Use	• To print out the document that the machine relayed during relay TX. • The relay print will be output in the following case. *1.* When the relay delivery completes appropriately. *2.* When the delivery job is cancelled halfway by turning OFF sub power sitch. *3.* When the delivery job is cancelled due to redial over. *4.* When main power switch is turned OFF/ON during relay print error. *5.* When delivery job is deleted in user operation during redialing. *6.* When delivery job is deleted in user operation during relay delivery.
Setting/ Procedure	• The default setting is OFF. “ ON “OFF”

<Destination Check Display Function>

Functions	• To set whether or not to display the list of specified addresses when sending the fax.
Use	• To use when displaying and checking the list of specified addresses when sending the fax.
Setting/ Procedure	• The default setting is OFF. ON “OFF”

(2) Memory RX

- It will be displayed only when the following setting is set to “ON”.
  [Service Mode] → [FAX] → [System] → [Display Setting] → [Compulsory Memory RX]
- It will not be displayed when [PC-FAX RX Setting], [Forward TX Setting] or [TSI User Box Setting] is set to “ON”.

Functions	• To set whether to use the forced memory RX function.
Use	• To store the received text in the hard disk without printing, and print it out when ordered.
Setting/ Procedure	• The default setting is OFF. ON “OFF” • Enter the password (up to 8 digits) for printing when set to [ON].

(3) Closed Network RX

- It will be displayed when the following setting is set to “ON”.
  [Service Mode] → [FAX] → [System] → [Display Setting] → [Closed area RX]

Functions	• To set whether to use the closed network function.
Use	• To receive data only from the device which password matches.
Setting/ Procedure	• The default setting is OFF. ON “OFF” • When set to [ON], enter the password (up to 4 digits) to be used.

(4) Forward TX Setting

- It will not be displayed when [PC-FAX RX Setting], [Memory RX] or [TSI User Box Setting] is set to “ON”.
- It will not be displayed when the following setting shows that Vendor or Authentication Device is mounted.
  [Service Mode] → [Billing Setting] → [Management Function Choice]

Functions	• To set whether to use the forward fax function.
Use	• To forward the received text to the receiver which has been specified. Forward & Print : Forward the received text, and print all out Forward & Print (If TX Fails) : Forward the received text, and prints out only when fails to be forwarded
Setting/ Procedure	• The default setting is OFF. “OFF” Forward & Print Forward & Print (If TX Fails) • When set to [ON], set the address to forward to.

(5) Incomplete TX Hold

- It will be displayed when the following setting is set to “ON”.
  [Service Mode] → [FAX] → [System] → [Display Setting] → [Re-Transimission]
- It will not be displayed when the following setting shows that Management Device 2 is mounted.
  [Service Mode] → [Billing Setting] → [Management Function Choice]

Functions	To set whether to use incomplete TX hold function.
Use	• To re-send the data failed to be sent after a given time.
Setting/ Procedure	• The default setting is OFF. ON “OFF” • When set to ON, specify the Incomplete TX Hold Time.

(6) PC-Fax RX Setting

- It will not be displayed when [Forward TX Setting], [Memory RX] or [TSI User Box Setting] is set to “ON”.

Functions	• To set whether to use the PC-FAX reception function.
Use	• To store the received text file in the box in the hard disk.
Setting/ Procedure	• The default setting is OFF. ON “OFF” • When set to ON, specify the address to store the file.

(7) TSI User Box Setting

- It will not be displayed when [Forward TX Setting], [Memory RX] or [PC-Fax RX Setting] is set to “ON”.

Functions	• To set whether to use TSI distribution or not. • To set setting method when there is no matched box at receiving.
Use	• To use TSI distribution. • To change setting method when there is no matched box at receiving. RX print : To print the received data. Memory RX Use Box : To store the received data in the forced memory receiving box.
Setting/ Procedure	<TSI User Box Setting> • The default setting is OFF. ON “OFF” • Press [TSI User Box Registration] and register the distribution. <Non-matched Box Setting> • The default setting is RX Print. “RX Print” Memory RX User Box

F. PBX CN Set

Functions	• To set whether to use PBX connection setting or not.
Use	• This will be used when the machine is connected to PBX line.
Setting/ Procedure	• The default setting is OFF. ON “OFF” • When set to [ON], enter the external number between 0 and 9999.

G. Report Settings

(1) Activity Report

Functions	• To set whether to print out the activity report or not, and also the timing for printing.
Use	• To print out the activity report.
Setting/ Procedure	• The default setting is Every 100 Comm. OFF Daily “Every 100 Comm.” 100/ Daily

(2) TX Report

Functions	• To set whether to print out the TX report, and also the timing for printing.
Use	• To print out the TX report.
Setting/ Procedure	• The default setting is If TX Fails. ON “If TX Fails” OFF

(3) Sequential TX Report

Functions	• To set whether to print out the sequential TX report or not.
Use	• To print out the sequential TX report.
Setting/ Procedure	• The default setting is ON. "ON" OFF

(4) Timer Reservation TX Report

Functions	• To set whether to print out the reservation TX or not.
Use	• To print out the reservation TX.
Setting/ Procedure	• The default setting is ON. "ON" OFF

(5) Confidential RX Report

Functions	• To set whether to print out the confidential RX report.
Use	• To print out the confidential RX report.
Setting/ Procedure	• The default setting is ON. "ON" OFF

(6) Bulletin TX Report

Functions	• To set whether to print out the bulletin TX report or not.
Use	• To print out the bulletin TX report.
Setting/ Procedure	• The default setting is ON. "ON" OFF

(7) Relay TX Result Report

- It will be displayed when the following setting is set to "ON".
  [Service Mode] → [FAX] → [System] → [Display Setting] → [Relay]

Functions	• To set whether to print out the Relay TX Result Report or not.
Use	• To print out the relay TX result report after the relay delivery is completed when the machine is used as the relay delivery station.
Setting/ Procedure	• The default setting is ON. "ON" OFF

(8) Relay Request RX Report

- It will be displayed when the following setting is set to "ON".
  [Service Mode] → [FAX] → [System] → [Display Setting] → [Relay]

Functions	• To set whether to print out the Relay Request RX Report or not.
Use	• To print out the Relay request RX report during relay request RX when the machine is used as the relay delivery station.
Setting/ Procedure	• The default setting is ON. "ON" OFF

(9) PC-Fax TX Error Report

- It will not be displayed when the following setting shows that Management Device 2 is mounted.
  [Service Mode] → [Billing Setting] → [Management Function Choice]

Functions	• To set whether to print out the PC-Fax TX Error Report or not.
Use	• To print out the PC-Fax error report when TX error occurs during PC-Fax TX.
Setting/ Procedure	• The default setting is OFF. ON "OFF"

(10) Broadcast Result Report

Functions	• To set the format to output the broadcast result report.
Use	• To print out the broadcast result report All Dest. : Outputs all reports after transmitting to all addresses 1 Dest. at a time : Outputs a report after each transmission
Setting/ Procedure	• The default setting is All Dest. "All Dest." 1 Dest. at a time

(11) TX Result Report Check

Functions	• To set whether to display the TX result report screen.
Use	• To display the TX result report screen.
Setting/ Procedure	• The default setting is OFF. ON "OFF"

(12) Network Fax RX Error Report

- Settings will be available when either [IP Address Fax] or [Internet Fax] is set to "ON" in the following settings.
  [Administrator Setting] → [Network Setting] → [Network Fax Setting] → [Network Fax Function Settings]

Functions	• To set whether to print RX error report when network fax function is being used.
Use	• To print the error report at unusual situation such as receiving the image data that cannot be processed.
Setting/ Procedure	• The default setting is OFF. ON "OFF"

(13) MDN Message

- Settings will be available only when [Internet Fax] is set to "ON" in the following settings.
  [Administrator Setting] → [Network Setting] → [Network Fax Setting] → [Network Fax Function Settings]

Functions	• To set whether to print message when receiving response message to MDN request when internet fax function is being used.
Use	
Setting/ Procedure	• The default setting is Print. "Print" Do Not Print

(14) DSN Message

- Settings will be available only when [Internet Fax] is set to “ON” in the following settings.
  [Administrator Setting] → [Network Setting] → [Network Fax Setting] → [Network Fax Function Settings]

Functions Use	• To set whether to print message when receiving response message to DSN request when network fax function is being used.
Setting/ Procedure	• The default setting is Do Not Print. Print “Do Not Print”

(15) Receipt Mail Text

- Settings will be available only when [Internet Fax] is set to “ON” in the following settings.
  [Administrator Setting] → [Network Setting] → [Network Fax Setting] → [Network Fax Function Settings]

Functions	• To set whether to print mail text received normally as the report when internet fax function is being used.
Use	• To print the received mail text when printing the received image data.
Setting/ Procedure	• The default setting is Print. “Print” Do Not Print

H. Job Settings List

- It will not be displayed when the following setting shows that Vendor is mounted.
  [Service Mode] → [Billing Setting] → [Management Function Choice]
  (It will be displayed when the Key counter is mounted or when the following setting shows that switch No.33 is set to [01] at HEX assignment.
  [Service Mode] → [System 2] → [Software Switch Setting])

Functions Use	• The set value list of the fax set up into this machine can be printed.
Setting/ Procedure	*1.* Touch [Administrator Setting] → [Fax Setting] → [Job Settings List]. *2.* Select the feed tray. *3.* Select the simplex or duplex print (only when the automatic duplex unit is mounted), and touch the Start key.

I. Multi Lines Setting

- It will be displayed only when the optional fax multi line (ML-501) is mounted.

(1) Telephone Line Setting

<Dialing Method>

Functions	• To set the dial method for the expanded line.
Use	• To use when changing the dial method for the expanded line.
Setting/ Procedure	• The default setting is PB. "PB" 10 pps **NOTE** • **The displays are different depending on the country.**

<Number of Rx Call Rings>

Functions	• To set the number of RX call rings for the expanded line.
Use	• To change the number of artificial ringback tones with expanded line when receiving calls until it starts receiving operation.
Setting/ Procedure	• The default setting is 2 X. "2 X" (0 to 15)

<Line Monitor Sound>

Functions	• To set whether or not to output the line monitor sound of the expanded line from the speaker.
Use	
Setting/ Procedure	• The default setting is ON. "ON" OFF

(2) Function Setting

<PC-FAX TX Setting>

- It will not be displayed when the following setting shows that the management device 2 is mounted.
  [Service Mode] → [Billing Setting] → [Management Function Choice]

Functions	• To set the number of the line used for PC-FAX transmission.
Use	• To use when specifying the line to be used for PC-FAX transmission when using the expanded line.
Setting/ Procedure	• The default setting is No Selection. "No Selection" Line 1 Line 2

(3) Multi Lines Setting

Functions	• To set the system for using each line when using more than one line.
Use	• To use when setting the system for using each line when using more than one line.
Setting/ Procedure	<Multi Line Usage> • When selecting [Normal], perform the transmission setting for Line 2. <Line 2 Setting> • The default setting is TX and RX. "TX and RX" RX Only TX Only

(4) Sender Fax No.

Functions	• To register the fax ID when using the additional line.
Use	• To register the fax ID (for additional line).
Setting/ Procedure	• Use 10-key pad or [+] / [space], enter the fax ID (up to 20 characters).

J. Network Fax Setting

- It will be displayed only when either [IP Address Fax] or [Internet Fax] is set to "ON" in the following settings.
  [Administrator Setting] → [Network Setting] → [Network Fax Setting] → [Network Fax Function Settings]

(1) Black Compression Level

- It will be displayed only when either [IP Address Fax] or [Internet Fax] is set to "ON" in the following settings.
  [Administrator Setting] → [Network Setting] → [Network Fax Setting] → [Network Fax Function Settings]

Functions	• To set black compression level at monochrome TX mode when network fax function is being used.
Use	• To change black compression level at monochrome TX mode.
Setting/ Procedure	• The default setting is MH. "MH" MR MMR

(2) Internet Fax Rx Ability

- It will be displayed only when [Internet Fax] is set to “ON” in the following settings. [Administrator Setting] → [Network Setting] → [Network Fax Setting] → [Network Fax Function Settings]

Functions	• To set image data compression system, paper size and resolution, which can be received by the machine with internet fax.
Use	• To limit the data acceptable with internet fax.
Setting/ Procedure	• The following shows the options of each setting item. (The default setting is put in “ ”.)

Compression Type	Paper Size	Resolution
“MMR”	“A3”	Ultra Fine
“MR”	“B4”	Super Fine
“MH”	“A4”	Fine
—	—	Std.

(3) I-Fax Advanced Settings

- It will be displayed only when [Internet Fax] is set to “ON” in the following settings. [Administrator Setting] → [Network Setting] → [Network Fax Setting] → [Network Fax Function Settings]

Functions	• To set advanced functions of internet fax.
Use	MDN Request : To set whether to send MDN (Message Disposition Notification) request when transmitting through internet fax. DSN Request : To set whether to send DSN (Delivery Status Notification) request when transmitting through internet fax. MDN Response : To set whether to response for MDN request made by the other machine when receiving through internet fax. MDN/DSN Resuponse Watch Time : To set the period to observe the response from the other machine when sending MDN/DSN request. In the case of time over, time out message is notified. Max Resolution : To set maximum resolution for reading, TX/RX and record when internet fax function is being used. **NOTE** • **Only MDN Request will be sent when both MDN Request and DSN Request are set to “ON.”**
Setting/ Procedure	• Default settings are shown below.

MDN Request	: “ON”	OFF
DSN Request	: ON	“OFF”
MDN Response	: “ON”	OFF
MDN/DSN Response Watch Time	: “24 hours” (1 to 99)	OFF
Max Resolution	: Super Fine	“Ultra Fine”

8.6.9 System Connection

A. OpenAPI Setting

(1) Access Setting

Functions	• To allow or restrict the access from other systems with OpenAPI when using Page Scope Data Administrator.
Use	• To restrict access from other systems with OpenAPI.
Setting/ Procedure	• The default setting is Allow. "Allow" Restrict

(2) Port No.

Functions	• To set the access port for other systems with OpenAPI when using PageScope Data Administrator.
Use	• To change the access port number for other systems with OpenAPI.
Setting/ Procedure	*1.* Select Port No. or Port Number (SSL), and touch [Input]. *2.* Press the Clear key. *3.* Enter the port number between 1 and 65535 using the 10-key pad.

(3) SSL

- It will be displayed when certificate is issued from PageScope Web Connection.

Functions	• To set whether to encrypt access from other systems by SSL when using Page Scope Data Administrator.
Use	• To encrypt access by SSL from other systems using OpenAPI.
Setting/ Procedure	• The default setting is OFF. ON "OFF"

(4) Authentication

Functions	• To set whether to authenticate access of other systems which uses OpenAPI when using PageScope Data Administrator.
Use	• To set authentication of the access from other systems using OpenAPI.
Setting/ Procedure	• The default setting is OFF. ON "OFF" • When setting to [ON], enter the login name and the password to be set.

B. Call Remote Center

- It will be displayed when the setup at the CS Remote Care center is complete.

Functions Use	• To call the CS Remote Care center from the administrator, when the CS Remote Care setup is complete.
Setting/ Procedure	For details, see "CS Remote Care." See P.329

C. Prefix/Suffix Auto Setting

Functions Use	• To set whether or not to automatically use prefix and suffix.
Setting/ Procedure	• The default setting is OFF. ON "OFF"

8.6.10 Security Setting

A. Administrator Password

Functions	• To set/change the administrator password.
Use	• To change the administrator password.
Setting/ Procedure	• Enter the administrator password on the on-screen keyboard. Current Password : Enter the current administrator password New Password : Enter the new administrator password to be used Re-Input Password : Reenter the new administrator password **NOTE** • **When selecting Utility → [Administrator Setting] → [Security Setting] → [Security Details] leads to [Password Rules] being ON, the password with the same letters, the password which is same as the previous one and the password of less than eight digits cannot be changed.**

B. User Box Admin. Setting

Functions	• To set whether to allow or restrict the box administrator to use the system.
Use	• To allow the box administrator to use the system. The box administrator is the special administrator for box, who is allowed to browse contents in common box / individual box without the password. **NOTE** • **[Allow] cannot be set when the user authentication or account track is not carried out.**
Setting/ Procedure	• The default setting is Restrict. Allow "Restrict" **NOTE** • **[Allow] cannot be selected when user authentication and account track are not conducted.** • **[Allow] cannot be selected when the following setting is set to "ON". [Administrator Setting] → [Security Setting] → [Enhanced Security Mode]** • Set the password when setting to [Allow]. **NOTE** • **When the following setting shows that [Password Rules] is set to "ON", the Password using only a single letter or the password same with the previous one, or the password with less than eight letters cannot be accepted. [Administrator Setting] → [Security Setting]**

C. Administrator Security Level

- It will not be displayed when the following setting shows that vendor or authentication device is mounted.
  [Service Mode] → [Billing Setting] → [Management Function Choice]

Functions	• To set the level for administrator setting item open to the user.
Use	• To make part of the administrator setting items open to the user. Level 1 : [Power Save Setting], [Auto Magnification Selection (Platen)], [Auto Magnification Selection (ADF)], [Specify Default Tray when APS Off], and [Select Tray for Insert Sheet] are available to users. Level 2 : [Power Save Setting], [Output Setting], [Date/Time Setting], [Daylight Savings Time Setting], [AE Level Adjustment], [Auto Magnification Selection (Platen)], [Auto Magnification Selection (ADF)], [Specify Default Tray when APS Off], [Select Tray for Insert Sheet], and [Print Jobs During Copy Operation] are available to users. Prohibit : Not to allow the user to set neither Level 1 nor Level 2
Setting/ Procedure	• The default setting is Prohibit. Level 1 Level 2 “Prohibit”

D. Security Details

(1) Password Rules

Functions	• To set whether to apply the password rules.
Use	• To apply the password rule to enhance security. • Passwords to be covered: Password for CE, administrator, box user authentication, fax confidential print, classified document, user authentication, box transmission, account track and box admin. • Details of the password rules: Password except user password, box transmission password shall be 8 digits of one-bite alphanumeric characters. (Case-sensitive) User password shall be 8 digits of one-bite alphanumeric characters. (Case-sensitive) Box transmission password shall be 8 digits of one-bite alphanumeric characters. Password with only the same letter is prohibited. Password same with the one prior to change is prohibited. When the password rule is set to [ON], the password cannot be changed or registered unless it follows the above conditions.
Setting/ Procedure	• The default setting is OFF. ON “OFF” **NOTE** • **[OFF] cannot be selected when the following setting is set to “ON”.** **[Administrator Setting] → [Security Setting] → [Enhances Security Mode]** • **[ON] cannot be selected when the following setting is set to “OFF”.** **[Service Mode] → [Enhanced Security] → [CE Authentication]** **[CE Authentication] will not be displayed and cannot be set to “OFF” when [Password Rules] is set to “ON”.**

(2) Prohibit Functions When Auth. Error

Functions	• To set the function for prohibiting authentication operation in order to prevent the unauthorized access.
Use	• To use when setting the system to prohibit authentication failure when conducting authentication by password, etc. • Authentications which are subjected to this function: CE authentication, administrator authentication, user authentication, SNMP authentication, confidential authentication, box authentication. Mode 1 : When failed to authenticate, authentication operation (entering the password) will be prohibited for a certain period of time. Mode 2 : When failed to authenticate, authentication operation (entering the password) will be prohibited for a certain period of time. The number of times failure occurred will be counted, and when the number reaches to the specified time, authentication will be prohibited and the access will be locked. When the access is locked, touch [Release] on the main unit, or turn main power switch OFF/ON to cancel it. For CE authentication and administrator authentication, only turning main power switch OFF/ON will cancel it.
Setting/ Procedure	• The default setting is Mode 1. "Mode 1" Mode 2 **NOTE** • **[Mode 2] will be set from [Administrator Setting]. It cannot be changed. Only the number of times for trials up to the access lock can be changed.** • Set the number of times for trials up to the access lock when selecting [Mode 2].

(3) Manual Destination Input

Functions	• To set whether to allow or prohibit to manually enter the destination address on the Destination Input screen.
Use	• To prohibit entering the destination address manually.
Setting/ Procedure	• The default setting is Allow. "Allow" Restrict

(4) Print Data Capture

• It will not be displayed when the optional image controller IC-406 is mounted.

Functions	• To set whether to allow or restrict capturing the print job data.
Use	• To be used when carrying out [Service Mode] → [System 2] → [Data capture].
Setting/ Procedure	• The default setting is Allow. "Allow" Restrict **NOTE** • **[Allow] cannot be selected when the following setting is set to "ON". [Administrator Setting] → [Security Setting] → [Enhanced Security Mode]**

(5) Secure Document Access Method

Functions	• To display the status of the authentication system on the control panel for the confidential document access.
Use	• It cannot be changed at the operator's option since it will automatically be set according to the [Prohibit Functions When Auth. Error] setting. • It will be set to [Mode 1] when [Prohibit Functions When Auth. Error] is set to [Mode 1]. It will be set to [Mode 2] when [Prohibit Functions when Auth. Error] is set to [Mode 2]. Mode 1 : This mode is for authentication by confidential document ID and password. It displays the list of the corresponding confidential document to print them. Mode 2 : This mode is for authentication by confidential document ID. It displays the list of the corresponding confidential document, and print them with authentication by password.
Setting/ Procedure	• The default setting is Mode 1. "Mode 1" Mode 2

(6) Restrict Fax TX

Use	• To set whether or not to prohibit sending fax.
Setting/ Procedure	• To prohibit sending fax.
Use	• The default setting is OFF. ON "OFF"

E. Enhanced Security Mode

Use	• To set whether or not to enhance security.
Setting/ Procedure	• To use when enhancing the security function at user's option. • The following settings are necessary for setting the security enhancement "ON". Administrator Password : Change it with the one which meets password rules. User Authentication : Set to "User Authentication (MFP)" or "User Authentication (External Server)". HDD Lock Password or Encryption word : Set the HDD lock password or encryption word with 20 characters. (Encryption word can be set only when SC-503 is mounted.) SSL Certificate : Register self-certificate for SSL communication. Image Controller Setting : Set to [Controller 0]. CE Password : Change it with the one which meets password rules. CE Authentication : Set to [ON]. CS Remote Care : Conduct RAM clear, and cancel the setting. Management Function Choice : Set to "Unset".
Use	• The default setting is OFF. ON "OFF"

NOTE

- **Setting the Enhanced Security Mode "ON" will change the setting values for the following functions.**

Name of the function	Default setting	When Enhanced Security Mode is ON
Password Rules	OFF	ON (Cannot be changed)
Prohibit Functions When Auth. Error	Mode 1	Mode 2 (Cannot be changed) set to three times *Can change times (from once to three times)
User Name List	OFF	OFF (Cannot be change)
Print without Authentication	Restrict	Restrict (Cannot be changed)
User Box Admin. Setting	Restrict	Restrict (Cannot be changed)
Temporary Data Overwrite Setting	OFF	Mode 1 (Cannot be changed to Mode 2)
Secure Document Access Method	Mode 1	Mode 2 (Cannot be changed) *It will be changed according to "Prohibit Functions When Auth. Error".
SSL	OFF	ON (Cannot be changed)
FTP Server	ON	OFF (Cannot be changed)
SNMPv1/v2c	Read/Write allowed	Only "Read" is allowed (Cannot be changed)
Registering and Changing Addresses	Allow	Restrict (Cannot be changed)
Public User Access	Restrict	Restrict (Cannot be changed)
Print Data Capture	Allowed	Prohibited (Cannot be changed)

F. HDD Setting

(1) Check HDD Capacity

Functions	• To display the used space capacity, total space capacity, and the remaining capacity of the hard disk.
Use	• To check the capacity and the status of use of the hard disk

(2) Temporary Data Overwrite Setting

- When the image becomes unnecessary, temporary data overwrite function will write meaningless data over all area where images are stored, and destroy the image data itself.
  The structure of image data will be destroyed so that in case HDD is stolen, the remaining data included in the image data will not leak. Using the HDD lock password function or optional security kit (SC-503) along with this function will provide a high level of security which prevents images of great importance from leaking. It is recommended to use HDD lock password function or security kit (SC-503) along with this function for those who require high level of security.

Functions	• To set whether or not to use temporary data overwrite. • To set overwriting method to use temporary data overwrite function.
Use	• To use when making temporary data overwrite function valid. • All data are temporarily written into HDD or memory during PC print, copier print, scanning and fax transmission. When the operation is complete, perform overwriting to the area data were once written in HDD or memory in order to enhance security. • To change overwriting method to use temporary data overwrite function. Mode 1: To overwrite 0x00 one time. Mode 2: Overwrite 0x00 → overwrite 0xff → overwrite 0x61 →validation • "Encryption Priority/Overwrite Priority" can be selected when the optional security kit SC-503 is mounted. Encryption Priority : When the encryption word is set, the security level of the data will be enhanced before writing to HDD. When erasing data, they will all be converted into encryption data before overwritten. Therefore, overwriting will be executed with the value besides the value specified by the selected mode. Overwrite Priority : Standard encryption method will be applied to data written to HDD even when the encryption word is set, so overwriting and erasing will be performed without fail using the specified value in the selected mode. It is used for performing the overwriting and erasing according to the HDD data erase standard. **NOTE** • **It is necessary to make HDD format when encryption priority/overwrite priority setting is changed.**
Setting/ Procedure	• The default setting is OFF. "OFF" Mode 1 Mode 2 **NOTE** • **[OFF] cannot be selected when the following setting is set to "ON". [Administrator Setting] → [Security Setting] → [Enhanced Security Mode]** • The default setting is Encryption Priority. (Only when the optional security kit SC-503 is mounted.) "Encryption Priority" Overwrite Priority

(3) Overwrite All Data

Functions	• To delete the whole data in the hard disk by overwriting. • To initialize the area of use for the user stored in NVRAM.
Use	• To use when disposing of the hard disk. • Select the overwriting method from Mode 1 through 8. Mode 1 : It overwrites 0x00 once. Mode 2 : Overwrites with random numbers → overwrites with random numbers → overwrites with 0x00 Mode 3 : Overwrites with 0x00 → overwrites with 0xff → overwrites with random numbers → verifies Mode 4 : Overwrites with random numbers → overwrites with 0x00 → overwrites with 0xff Mode 5 : Overwrites with 0x00 → overwrites with 0xff → overwrites with 0x00 → overwrites with 0xff Mode 6 : Overwrites with 0x00 → overwrites with 0xff → overwrites with 0x00 → overwrites with 0xff → overwrites with 0x00 → overwrites with 0xff → overwrites with random numbers Mode 7 : Overwrites with 0x00 → overwrites with 0xff → overwrites with 0x00 → overwrites with 0xff → overwrites with 0x00 → overwrites with 0xff → overwrites with 0xaa Mode 8 : Overwrites with 0x00 → overwrites with 0xff → overwrites with 0x00 → overwrites with 0xff → overwrites with 0x00 → overwrites with 0xff → overwrites with 0xaa → verifies
Setting/ Procedure	*1.* Touch [Overwrite All Data]. *2.* Touch [Overwrite]. *3.* Touch [Yes] on the check screen. *4.* Touch [YES] on the confirmation screen. *5.* Turn off the main power switch and turn it on again more than 10 seconds after.

(4) HDD Lock Password

Functions	• To set the lock password for the hard disk.
Use	• To enter, change or delete the lock password for the hard disk.
Setting/ Procedure	*1.* Touch [HDD Lock Password]. *2.* Enter the password (20 characters) on the on-screen keyboard, and touch [OK]. **NOTE** • **Password using only a single letter is not acceptable.** • **Don't forget the password. When the password is forgotten, the replacement of hard disk is needed.** *3.* Re-enter the password to confirm. *4.* Turn OFF the main power switch and turn it ON again more than 10 seconds after.

(5) HDD Formatting

Functions	• To conduct logical formatting of HDD.
Use	• To initialize HDD. **NOTE** • **It is subject to logical formatting here, therefore if starting with physical formatting, follow as [Service Mode] → [State Confirmation] → [Memory/HDD Adj.] → [HDD Format].**
Setting/ Procedure	*1.* Touch [HDD Formatting]. *2.* Touch [Yes]. *3.* Turn off the main power switch and turn it on again more than 10 seconds after.

(6) HDD Encryption Setting

- It can be set only when the optional security kit (SC-503) is mounted.

Functions	• To set encryption key necessary to mount the optional security kit SC-503.
Use	• To setup security kit SC-503. • To re-set encrypting word due to exchange of NVRAM board or etc. **NOTE** • **This setting is available only when the optional security kit SC-503 is mounted.** • **HDD formatting is required after this setting. Therefore it is necessary to retrieve certain data from HDD in advance.** **The following data will be lost after HDD formatting.** **① Address data** **② Authentication data : Authentication mode, user authentication setting, account track setting** **③ Box setting data : Box and text in the box, setting information of each box, box for fax** **④ Job history, fax transmission history**
Setting/ Procedure	*1.* Press [HDD Encryption Setting]. *2.* Enter encryption key (20 characters) with the keyboard on the operation panel and press [OK]. **NOTE** • **Double-byte and identical characters are not acceptable.** *3.* Turn off the main power switch and turn it on again more than 10 seconds after. *4.* Open [Administrator Setting] and conduct HDD formatting according to the instruction appeared on the panel. *5.* Turn off the main power switch and turn it on again more than 10 seconds after.

G. Management Function Setting

(1) Each Function Setting

2 • It will be displayed only when the following setting shows that Vendor 2, Management Device or Key Counter IF Vendor is mounted.
[Service Mode] → [Billing Setting] → [Management Function Choice]

Functions	• To set whether to use management function for each item of [Copy], [PC print], [Send data] and [Print others]. [Print others] is not displayed when vendor is connected. • [ON] for [Send Data] will not be displayed when the optional image controller (IC-406) is mounted.
Use	• To set whether to use Management function for each item of [Copy], [PC print], [Send data] and [Print others]. [Print others] is not displayed when Vender is connected. • [ON] for [Send Data] will not be displayed when the optional Image Controller (IC-402) is connected. 2 • When Key Counter IF Vendor is mounted, only [ON]/[OFF] setting of [Copy] and [PC print] can be selected.
Setting/ Procedure	• The default setting is ON. "ON" OFF Prohibit

(2) Max Copy Set

• It will be displayed only when the following setting shows that vendor is mounted.
[Service Mode] → [Billing Setting] → [Management Function Choice]

Functions Use	• To set the upper limit of the number of copy or PC print when management function has been set.
Setting/ Procedure	• The default setting is 999. 1 to "999"

(3) Network Function Setting

Functions	• To set whether to use network function or not when management function has been set.
Use	• Not to use the network function whose counter is difficult to be managed when management function has been set. • The following are target functions. PC FAX transmission, HDD TWAIN, PS Box Operator, PS Scan Direct, PS Job Spooler, Fiery: Scan to Box
Setting/ Procedure	• The default setting is ON. "ON" OFF **NOTE** • **However, when the vendor or management device setting in the Service Mode is set, this setting is set to OFF.** **Exercise caution since it will stay in "OFF" setting even when "unset" is selected on vendor or management device setting in Service Mode later.**

(4) Authentication Time Setting

- It will be displayed only when the following setting shows that authentication device is mounted.
  [Service Mode] → [Billing Setting] → [Management Function Choice]

Functions	• To set the authentication mode when authentication device is used.
Use	• To change the authentication mode when authentication device is used. Keep Card : Authentication is available leaving the card in the given place when making authentication with the device. Touch and Go : Card is placed only when authentication is made with the device and if the card is left for a given time (Authentication reset time) the authentication setting is reset. • When selecting “Touch and Go”, authentication reset is set after completing the job in [Authentication Time].
Setting/ Procedure	<Authentication Method> • The default setting is Touch and Go. Keep Card “Touch and Go” <Authentication Time> • The default setting is 1 min. 1 to 30 min. <Authentication Log-out When Job is Completed> • The default setting is Yes. “Yes” No

H. Delete Registered Stamp

Functions	• Delete the registered stamp for the copy protect.
Use	• Delete the registered stamp for the copy protect.
Setting/ Procedure	*1.* Touch [Delete Registered Stamp]. *2.* Touch [YES] to delete it.

8.7 Banner Printing

Functions	• To shift to the banner printing mode.
Use	• To use when printing on the long size paper.
Setting/ Procedure	*1.* Set the long size paper to the bypass tray. *2.* Touch [Banner Printing], and touch [ON]. *3.* Send the job for the long paper print. *4.* Touch [Finish] to finish banner printing mode. **NOTE** • **Only PC print is available for the long paper print.** • **Normal job cannot be accepted during banner printing mode.**

9. Adjustment item list

Adjustment/setting items				Replacement part/Service job	No	Replace paper feed roller	Replace paper separation roller assy	Change paper (tray 1) kind	Change marketing area	Install paper feed unit	Replace CCD unit	Replace mirror unit	Replace IU	Replace image transfer belt unit
Service Mode	Machine	Printer Area		Print Positioning: Leading Edge	1			❍						
				Print Positioning: Side Edge	2					❍				
				Dup Print Positioning: Side	3									
		Scan Area		Image position: Leading Edge	4									
				Image position: Side Edge	5						(4)			
				Cross Direction Adjustment	6						(3)			
				Feed Direction Adjustment	7							(4)		
		Org. Detecting Sensor Adj.			8				❍					
	Touch Panel Adjust				9									
	State Confir-mation	Memory/ HDD Adjust		HDD R/W Check	10									
				HDD Format	11									
		Table Number			12									
	Firmware Version				13									
	System 1/2	Reentry of setting values			14									
		Serial Number			15									
		Scan Calibration			16						(1)			
		Line Mag Setting			17						(2)			
	Counter	Life		Counter Clear	18	❍	❍							
	Image Process Adjustment			Gradation Adjust	19								❍	❍
	ADF			Read Pos Adj *1	20							(3)		
	Enhanced Security			NVRAM Data Backup	21									
Re-entry of Utility settings					22									
Re-entry of Enhanced Security settings					23									
Parallel adjustment of scanner/mirrors carriage					24							(1)		
Positioning exposure unit					25							(2)		
Scanner motor belt adjustment					26									
Original glass moving unit height adjustment					27									
PH skew adjustment					28									
F/W upgrading					29									
Installation of original size sensor					30									
Remounting of parameter chip (mechanical control board)					31									
Remounting of NVRAM (printer control board)					32									
Replace image transfer belt unit					33									

*1: Only when the optional automatic document feeder DF-608 is mounted.

✻ This table shows the adjustment items that are required when a part of the machine has been replaced. Priority order, if applicable, during the adjustment procedures is indicated by the corresponding number in the parentheses.

No	Replace original size detection sensor	Replace PH unit	Wind scanner drive cables	Replace scanner motor	Replace scanner assy	Replace scanner home sensor	Replace original glass moving unit	Replace glass step sheet	Replace mechanical control board	Replace printer control board	Replace image processing board	Replace original glass	Replace IDC/registration sensor/F,R	Replace hard disk	Add key counter	Execute memory clear	Execute add. option	Execute F/W update	Add fax board
1		(2)																	
2		(3)																	
3																			
4												(2)							
5						❍						(1)							
6																			
7			(5)	(2)	(3)														
8	(3)																		
9																(6)			
10														(2)					
11														(1)					
12	(2)															(2)			
13																	❍	❍	
14																(4)			
15																(3)			
16																			
17																			
18																			
19										(3)									
20			(4)		(2)		(2)	❍											
21										(4)									
22																(1)			
23															❍	(5)			
24			(2)																
25			(3)		(1)														
26			(1)	(1)															
27							(1)												
28		(1)																	
29									(2)	(2)	❍								❍
30	(1)																		
31									(1)										
32										(1)									
33													❍						

10. Service Mode

10.1 Service Mode function setting procedure

NOTE

- **Ensure appropriate security for Service Mode function setting procedures. They should NEVER be shown to any unauthorized person not involved with service jobs.**

A. Procedure

1. Press the Utility/Counter key.
2. Touch [Details] on meter count display.
3. Press the following keys in this order.
   Stop → 0 → 0 → Stop → 0 → 1

NOTE

- **When selecting [CE Authentication] under [Enhanced Security] available from Service Mode, authentication by CE password is necessary.**
  Enter the 8 digits CE password, and touch [END].
  (The initial setting for CE password is "92729272.")
- **When the following setting is set to "ON", CE password authentication is necessary.**
  [Administrator Setting] → [Security Setting] → [Enhanced Security Mode]
- **If a wrong CE password is entered, re-enter the right password. The machine will not enter Service Mode unless the CE password is entered correctly. To return to the Basic screen, turn OFF the sub power switch and turn it ON again.**
  When the following setting is set to "Mode 2", operation will be prohibited since it indicates authentication failure by failing to enter the correct CE password within the specified number of times. It needs to be cancelled by turning main power switch OFF/ON.
- **The service code entered is displayed as "∗."**

4. The Service Mode menu will appear.

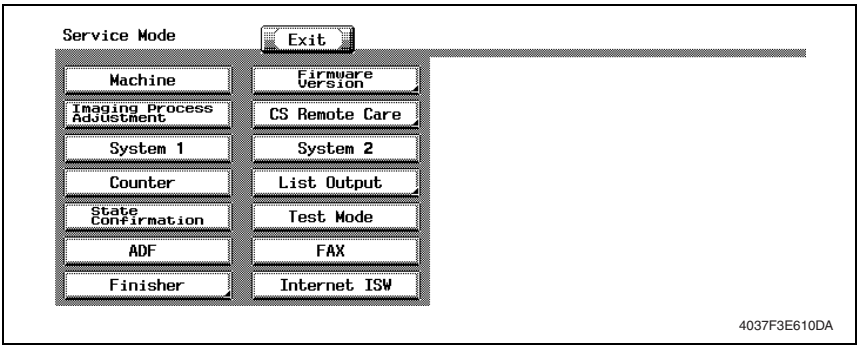

NOTE

- **Be sure to change the CE password from its default value.**
- **For the procedure to change the CE password, see the Enhanced Security.**

See P.385

B. Exiting

- Touch the [Exit] key.

C. Changing the setting value in Service Mode functions

- Use the [+] / [-] key to enter or change the setting value.
- Use the 10-key pad to enter the setting value. (To change the setting value, first press the Clear key before making an entry.)

10.2 Service Mode function tree

✻ The function tree is shown to comply with the format displayed on the screen.
*1: Settings are available only when the optional fax kit (FK-502) is mounted.
*2: It will be displayed only when the optional fax multi line (ML-501) is mounted.
*3: It will be displayed only when the [Internet ISW Set] is set to “ON.”

Service Mode			Ref. Page
Machine	Change Warm Up Time		P.310
	Fusing Temperature		P.311
	Fusing Transport Speed		P.312
	Org. Size Detecting Sensor Adj.		P.312
	Printer Area	Print Positioning: Leading Edge	P.313
		Print Positioning: Side Edge	P.314
		Dup Print Positioning: Side Edge	P.315
	Scan Area	Image Position: Leading Edge	P.316
		Image Position: Side Edge	P.317
		Cross Direction Adjustment	P.318
		Feed Direction Adjustment	P.319
	Printer Resist Loop		P.319
	Color Registration Adjustment	Cyan	P.320
		Magenta	
		Yellow	
	Fusing Loop Size		P.321
	Manual Bypass Tray Adjustment		P.321
	Lead Edge Erase Adjustment		P.321
	Thin Line Prior Detection		P.321
Firmware Version			P.322
Imaging Process Adjustment	Gradation Adjust		P.323
	D Max Density		P.324
	Background Voltage Margin		P.324
	Transfer Output Fine Adjustment	2nd Transfer Adjust	P.325
		1st Transfer Adjust	P.325
	Stabilizer	Stabilization Only	P.326
		Initialize+Image Stabilization	P.326
	Thick Paper Density Adjustment		P.327
	TCR Toner Supply		P.327
	Monochrome Density Adjustment		P.327
	Dev. Bias Choice		P.328
CS Remote Care			P.329
System 1	Marketing Area		P.349
	Tel/Fax Number		P.349
	Serial Number		P.349
	No Sleep		P.350
	Foolscap Size Setting		P.350

Service Mode		Ref. Page
System 1	Original Size Detection	P.350
	Install Date	P.351
	Initialization	P.350
	Communication System Setting	P.351
System 2	HDD	P.351
	Image Controller Setting	P.352
	Option Board Status	P.353
	Consumable Life Reminder	P.353
	Unit Change	P.353
	Software Switch Setting	P.353
	Scan Calibration	P.354
	LCT Paper Size Setting	P.354
	Line Mag Setting	P.354
	Data Capture	P.355
	Thin Line Detect. Setting	P.357
	Stamp	P.358
	Network Fax Setting	P.359
Counter	Life	P.360
	Jam	P.360
	Service Call Counter	P.361
	Warning	P.361
	Maintenance	P.361
	Service Total	P.361
	Counter Of Each Mode	P.362
	Service Call History (Data)	P.362
	ADF Paper Pages	P.362
	Paper Jam History	P.362
	Fax Connection Error	P.362
	Thin Line Counter	P.362
	Counter Reset	—
List Output	Machine Management List	P.363
	Adjustment List	P.363
	Parameter List	P.363
	Service Parameter	P.363
	Protocol Trace	P.363
	Fax Setting List	P.363
State Confirmation	Sensor Check	P.364
	Table Number	P.371
	Level History1	P.372
	Level History2	P.372
	Temp. & Humidity	P.372
	CCD Check	P.372

Service Mode			Ref. Page
State Confirmation	Memory/HDD Adj.	Memory Check	P.373
		Compress / Decompression Check	P.373
		Memory Bus Check	P.373
		Work Memory In/Out Check	P.374
		HDD Version Up	P.374
		HDD R/W Check	P.374
		HDD Format	P.375
		HDD Version Down	P.375
	Memory/HDD State		P.376
	Color Regist		P.376
	IU Lot No.		P.376
	Adjustment Data List		P.376
Test Mode	Gradation Pattern		P.377
	Halftone Pattern		P.378
	Lattice Pattern		P.378
	Solid Pattern		P.379
	Color Sample		P.379
	8 Color Solid Pattern		P.380
	Running Mode		P.380
	Fax Test		P.380
ADF	Original Stop Position		P.380
	Registration Loop Adj.		
	Auto Stop Position Adjustment		
	Paper Passage		
	Sensor Check		
	Original Tray Width		
	Read Pos Adj		
	Feed Zoom		
	Scanning Light Adjustment		
FAX *1	Line 1 *1	Modem/ECU *1	P.380
		NetWork *1	
		System *1	
		Fax File Format *1	
		Communication *1	
		List Output *1	
		Function Parameter *1	
		Initialization *1	
	Line 2 *1	Modem/ECU *1	
		NetWork *1	
		Communication *1	
		Initialization *1	

Service Mode		Ref. Page
Finisher	Fold & Staple Pos. Adjustment	P.380
	Finisher Check	
	Punch Regist Loop Size	
	Punch Horizontal Position	
Internet ISW	Internet ISW Set	P.381
	HTTP Setting *3	P.381
	FTP Setting *3	P.382
	Forwarding Access Setting *3	P.383
	Download *3	P.384

10.3 Date/Time Input mode

- This mode is used to set time-of-day and date.

10.3.1 Date & Time Setting mode screen

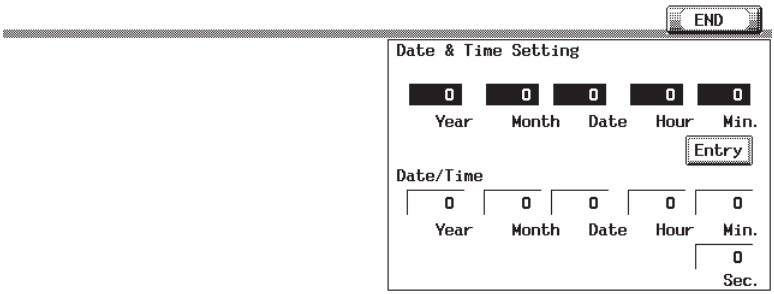

4038F3E510DA

A. Date & Time Setting mode setting procedure

1. Call the Service Mode to the screen.
2. Press the following keys in this order.
   Stop → 1 → 1 → 4 → 4 → Clear
3. Enter year, month, day, hour, and minute, in that order, from 10-key pad.
   (Year 4 digits → Month 2 digits → Day 2 digits → Hour 2 digits → Minute 2 digits)

NOTE

- **When setting the month, day, hour, or minute, enter “0” first if the data one digit.**

4. Make sure that correct figures have been entered and then touch [Entry].
5. Touch [END] to return to the Service Mode.

10.4 Machine

10.4.1 Change Warm Up Time

Functions	• To change the temperature control value for the fusing pressure roller until the warm up is complete.
Use	• Use when the curling of the paper occurs (mostly right after the warm up), or when the paper jam, exit error, as well as punching, stapling, or folding position error occurred due to the curling of the paper by using the recycled paper or low quality paper. Mode 1: Warm up is complete when the fusing pressure roller reaches 115 °C / 239 °F. (Warm-up time: 72 seconds) Mode 2: Warm up is complete when the fusing pressure roller reaches 135 °C / 275 °F, and prints by 17 ppm (A4, 11 x 8 $^1/_2$) until it reaches 145 °C / 293 °F. (Warm-up time: 99 seconds) Mode 3: Warm up is complete when the temperature of the fusing pressure roller reaches 165 °C / 329 °F. (Warm-up time: 180 seconds)
Setting/ Procedure	• The default setting is Mode 1. “Mode 1” Mode 2 Mode 3

10.4.2 Fusing Temperature

Functions	• To adjust individually the temperature of the heating roller and the fusing pressure roller for each type of paper, thereby coping with varying fusing performance under changing environmental conditions.
Use	• When fusing performance is poor, or wax streak or offset occurs when the type of paper is changed or environmental conditions change. • Use when the curling of the paper due to the paper type or environmental change occurred, or when the paper jam, as well as stapling or folding position error occurred due to the curling of the paper. • By setting the temperature higher (+), gloss of print or OHP transparencies can be improved. • By setting the temperature lower (-), exit roller mark or uneven transparencies of OHP can be reduced.
Adjustment Range	Heating Roller : -5 °C to +5 °C (step: 5 °C) ..... envelope :-20 °C to +5 °C (step: 5 °C) ..... others Pressure Roller : -5 °C to +5 °C (step: 5 °C) ..... envelope :-20 °C to +5 °C (step: 5 °C) ..... others
Adjustment Instructions	If fusing performance is poor, increase the setting. If wax streaks occur, decrease the setting. If offset is poor, decrease the setting. If curling of the paper occurs, decrease the setting.
Setting/ Procedure	**NOTE** • **To adjust the fusing temperature, adjust on the heating side first. If the further adjustment is necessary, adjust on the pressure side.** *1.* Call the Service Mode to the screen. *2.* Touch these keys in this order: [Machine] → [Fusing Temperature]. *3.* Select the paper type and fusing roller type. *4.* Enter the new setting from the [+] / [-] key. *5.* Touch [END] to validate the adjustment value. *6.* Return to the basic screen. *7.* Output two or three test printing and check to see whether the image has any problem. *8.* Make the adjustment for each type of paper.

10.4.3 Fusing Transport Speed

Functions	• To adjust the speed of the fusing drive motor so as to match the fusing speed with transport speed.
Use	• Brush effect or blurred image is evident as a result of changes in environmental conditions or degraded durability.
Variable Range	-2 % to +2 % (in 0.1 % increments)
Adjustment Instructions	If brush effect is evident, vary the setting value and check for image. If a blurred image occurs, decrease the setting.
Setting/ Procedure	*1.* Call the Service Mode to the screen. *2.* Touch these keys in this order: [Machine] → [Fusing Transport Speed]. *3.* Select the transport speed, at which the brush effect or blurred image has occurred. Transport speed / Paper Setting 167 mm/s: Plain paper: monochrome/color 56 mm/s: Thick paper, OHP film, envelope, postcard, labels : monochrome, color *4.* Enter the new setting from the 10-key pad. *5.* Touch [END] to validate the adjustment value. *6.* Check the copy image for any image problem.

10.4.4 Org. Size Detecting Sensor Adj.

Functions	• To automatically adjust the original detection distance for the original size sensor. • To display if the original size detection 2 Sensor is mounted.
Use	• When the sensor is replaced with a new one. • When an optional sensor has been added. • When an erroneous original size detection is made. • When the marketing area setting is changed.
Adjustment Instructions	If the adjustment has been successfully made, it completes the adjustment procedure. If the adjustment has turned out to be unsuccessful, check the optional original size sensors for correct installation and change the defective sensor or harness.
Setting/ Procedure	*1.* Place a blank sheet of A3 or 11 × 17 paper on the original glass and lower the original cover. *2.* Call the Service Mode to the screen. *3.* Touch these keys in this order: [Machine] → [Org. Size Detecting Sensor Adj.]. *4.* Press the Start key.

10.4.5 Printer Area

A. Print Positioning: Leading Edge

Functions	• To vary the print start position in the sub scan direction for each of different paper types in tray 1.
Use	• The PH unit has been replaced. • The paper type has been changed. • The image on the copy deviates in the sub scan direction. • A faint image occurs on the leading edge of the image.
Adjustment Specification	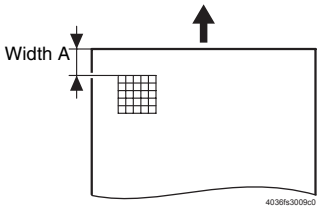 Width A on the test pattern produced should fall within the following range. Specifications: 4.2 ± 0.5 mm Setting range: -3.0 mm to +3.0 mm (in 0.2 mm increments)
Adjustment Instructions	If width A is longer than the specifications, make the setting value smaller than the current one. If width A is shorter than the specifications, make the setting value greater than the current one.
Setting/ Procedure	*1.* Call the Service Mode to the screen. *2.* Touch [Machine] → [Printer Area] → [Print Positioning: Leading Edge]. *3.* Select the [Plain Paper]. *4.* Press the Start key to let the machine produce a test pattern. *5.* Check the dimension of width A on the test pattern. *6.* If width A falls outside the specified range, change the setting using the [+] / [-] key. *7.* Press the Start key to let the machine produce a test pattern. *8.* Check the dimension of width A on the test pattern. *9.* If width A is outside the specified range, change the setting again and make a check again. *10.*If width A falls within the specified range, touch [END]. *11.*Following the same procedure, adjust for Thick 1 to 3, OHP film, and Enve.

B. Print Positioning: Side Edge

Functions	• To vary the print start position in the main scan direction for each paper source.
Use	• The PH Unit has been replaced. • A paper feed unit has been added. • The image on the copy deviates in the main scan direction.
Adjustment Specification	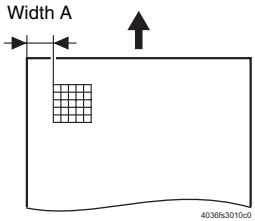 Width A on the test pattern produced should fall within the following range. Specifications: 3.0 ± 0.5 mm Setting range: -3.0 mm to +3.0 mm (in 0.2 mm increments)
Adjustment Instructions	If width A is longer than the specifications, make the setting value smaller than the current one. If width A is shorter than the specifications, make the setting value greater than the current one.
Setting/ Procedure	*1.* Call the Service Mode to the screen. *2.* Touch [Machine] → [Printer Area] → [Print Positioning: Side Edge]. *3.* Select the paper source to be adjusted. *4.* Press the Start key to let the machine produce a test pattern. *5.* Check the dimension of width A on the test pattern. *6.* If width A falls outside the specified range, change the setting using the [+] / [-] key. *7.* Press the Start key to let the machine produce a test pattern. *8.* Check the dimension of width A on the test pattern. *9.* If width A is outside the specified range, change the setting again and make a check again. *10.* If width A falls within the specified range, touch [END]. *11.* Following the same procedure, adjust for all other paper sources. (Use A4 or 8 $^1/_2$ × 11 plain paper for the bypass.)

C. Dup Print Positioning: Side Edge

Functions	• To vary the print start position in the main scan direction for each paper source in the 2-Sided mode.
Use	• The image on the backside of the 2-sided copy deviates in the main scan direction.
Adjustment Specification	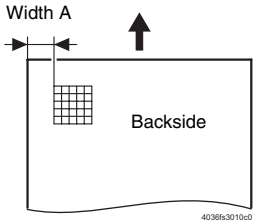 •Width A on the test pattern produced should fall within the following range. •For measurement, use the image produced on the backside of the test pattern. Specifications: 3.0 ± 0.5 mm Setting range: -3.0 mm to +3.0 mm (in 0.2 mm increments)
Adjustment Instructions	• If width A is longer than the specifications, make the setting value smaller than the current one. • If width A is shorter than the specifications, make the setting value greater than the current one.
Setting/ Procedure	*1.* Call the Service Mode to the screen. *2.* Touch [Machine] → [Printer Area] → [Dup Print Positioning: Side Edge]. *3.* Select the paper source to be adjusted. *4.* Press the Start key to let the machine produce a test pattern. *5.* Check the dimension of width A on the test pattern. *6.* If width A falls outside the specified range, change the setting using the [+] / [-] key. *7.* Press the Start key to let the machine produce a test pattern. *8.* Check the dimension of width A on the test pattern on the backside of the copy. *9.* If width A is outside the specified range, change the setting again and make a check again. *10.*If width A falls within the specified range, touch [END]. *11.*Following the same procedure, adjust for all other paper sources. (Use A4 or 8 $^1/_2$ × 11 plain paper for the manual bypass tray.)

10.4.6 Scan Area

- Use the following color chart for the adjustment of the scanner section.
- If the color chart is not available, a scale may be used instead.

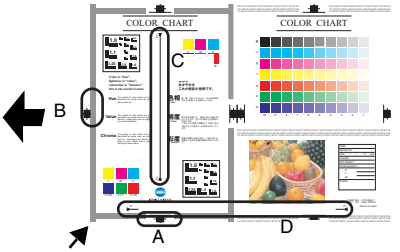

Original Reference

4038F3C517DA

- A: Image Position: Side Edge
- B: Image Position: Leading Edge
- C: Cross Direction Adjustment
- D: Feed Direction Adjustment

A. Image Position: Leading Edge

Functions	• To adjust variations in mounting accuracy and sensitivity of the scanner home sensor and in mounting accuracy of the original width scale by varying the scan start position in the main scan direction.
Use	When the original glass is replaced. When the original width scale is replaced.
Adjustment Specification	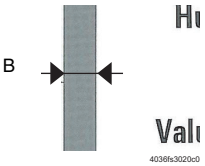 •B width on the color chart and one on the copy sample are measured and adjusted so that the difference of B width satisfies the specifications shown below. •An adjustment must have been completed correctly of [Print Positioning: Leading Edge] of [Printer Area]. Specifications B: ± 0.5 mm (10 ± 0.5 mm if a scale is used) Setting range -5.0 to +5.0 (in 0.1 mm increments)
Adjustment Instructions	If the copy image is less than the specified length, increase the setting value. If the copy image exceeds the specified length, decrease the setting value.
Setting/ Procedure	*1.* Call the Service Mode to the screen. *2.* Touch these keys in this order: [Machine] → [Scan Area] → [Image Position: Leading Edge]. *3.* Position the color chart correctly so that the original reference point is aligned with the scale. *4.* Press the Start key to make a copy. *5.* Check point B on the image of the copy. *6.* If width B on the copy falls outside the specified range, change the setting using the [+] / [-] key. *7.* Press the Start key to make another copy. *8.* Check the image on the copy to see if the specifications are met. *9.* Make adjustments until the specifications are met.

B. Image Position: Side Edge

Functions	• To adjust part-to-part variations in accuracy of IR parts and their mounting accuracy by varying the scan start position in the main scan direction.
Use	• When the CCD unit is replaced. • When the original glass is replaced. • The scanner home sensor has been replaced.
Adjustment Specification	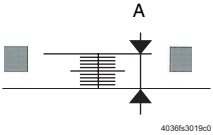 •A width on the color chart and one on the copy sample are measured and adjusted so that the difference of A width satisfies the specifications shown below. •An adjustment must have been completed correctly of [Print Positioning: Side Edge] of [Printer Area]. Specifications A: ± 1.0 mm Setting range -10.0 to +10.0 (in 0.1 mm increments)
Adjustment Instructions	If the copy image is less than the specified length, increase the setting value. If the copy image exceeds the specified length, decrease the setting value.
Setting/ Procedure	*1.* Call the Service Mode to the screen. *2.* Touch these keys in this order: [Machine] → [Scan Area] → [Image Position: Side Edge]. *3.* Position the color chart correctly so that the original reference point is aligned with the scale. *4.* Press the Start key to make a copy. *5.* Check point A on the image of the copy. *6.* If the image falls outside the specified range, change the setting using the [+] / [-] key. *7.* Press the Start key to make a copy. *8.* Check point A of the image on the copy to see if the specifications are met. *9.* Make adjustments until the specifications are met.

C. Cross Direction Adjustment

Functions	• To adjust the zoom ratio in the main scan direction for the scanner section
Use	• The CCD unit has been replaced.
Adjustment Specification	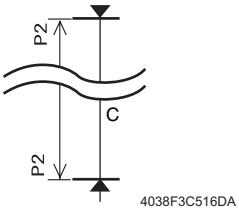 •Measure C width on the color chart and on the sample copy, and adjust the gap to be within the following specification. •An adjustment must have been completed correctly of “Paper Feed Direction Adj.” of [Printer Area]. Specifications C: ± 1.0 mm Setting range 0.990 to 1.010 (in 0.001 increments)
Adjustment Instructions	If the C width on the copy sample is less than one on color chart, increase the setting. If the C width on the copy sample exceeds one on color chart, decrease the setting.
Setting/ Procedure	*1.* Call the Service Mode to the screen. *2.* Touch these keys in this order: [Machine] → [Scan Area] → [Cross Direction Adjustment]. *3.* Position the color chart correctly so that the original reference point is aligned with the scale. *4.* Press the Start key to make a copy. *5.* Check the C width on the image of the copy. *6.* If the image falls outside the specified range, change the setting using the [+] / [-] key. *7.* Press the Start key to make another copy. *8.* Check the image on the copy to see if the specifications are met. *9.* Make adjustments until the specifications are met.

D. Feed Direction Adjustment

Functions	• To adjust the zoom ratio in the sub scan direction for the scanner section
Use	• The scanner assy has been replaced. • The scanner motor has been replaced. • The scanner drive cables have been replaced.
Adjustment Specification	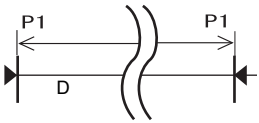 4038F3C518DA •Measure D width on the color chart and on the sample copy, and adjust the gap to be within the following specification. •An adjustment must have been completed correctly of “Paper Feed Direction Adj.” of [Printer Area]. Specifications D: ± 1.5 mm Setting range 0.990 to 1.010 (in 0.001 increments)
Adjustment Instructions	If the D width on the copy sample is less than one on color chart, increase the setting. If the D width on the copy sample exceeds one on color chart, decrease the setting.
Setting/ Procedure	*1.* Call the Service Mode to the screen. *2.* Touch these keys in this order: [Machine] → [Scan Area] → [Feed Direction Adjustment]. *3.* Position the color chart correctly so that the original reference point is aligned with the scale. *4.* Press the Start key to make a copy. *5.* Check the D width on the image of the copy. *6.* If the image falls outside the specified range, change the setting using the [+] / [-] key. *7.* Press the Start key to make another copy. *8.* Check the image on the copy to see if the specifications are met. *9.* Make adjustments until the specifications are met.

10.4.7 Printer Resist Loop

Functions	• To set the correction value of the paper loop length for each process speed of tray 1 to tray 4, bypass, and duplex. • To adjust the length of the loop formed in paper before the registration rollers. • Use “Paper Passage” for paper passage check.
Use	When a paper skew occurs. When a paper misfeed occurs.
Adjustment Range	Different setting ranges are set for different transport speeds. <Tray 1 to Tray 4, LCT, Bypass> 167 mm/s : -8 to +8 56 mm/s : -15 to +15 <Duplex> 167 mm/s : -8 to +8 56 mm/s : -8 to +8
Setting/ Procedure	*1.* Call the Service Mode to the screen. *2.* Touch these keys in this order: [Machine] → [Printer Resist Loop]. *3.* Select the transport speed. *4.* Enter the new setting from the 10-key pad.

10.4.8 Color Registration Adjustment

A. Cyan, Magenta, Yellow

Functions	• To adjust color shift if there is any when comparing the original with copy of the plain or thick paper.
Use	• To correct any color shift
Adjustment Range	"0" (-6 to +6 dot)
Adjustment Instructions	If the cross deviates in the direction of C, increase the setting. If the cross deviates in the direction of D, decrease the setting.
Setting/ Procedure	*1.* Call the Service Mode to the screen. *2.* Touch these keys in this order: [Machine] → [Color Registration Adjustment]. *3.* Load tray 1 with A3/11x17 or A4/8 $^1/_2$ x11 plain paper. *4.* Press the Start key. *5.* On the test pattern produced, check for deviation between the black line and the line of each color at positions X and Y. *6.* Select the color to be adjusted. *7.* Using the [+] / [-] key, change the setting value as necessary. (At this time, only the line of the selected color moves.) *8.* Produce another test pattern and make sure that there is no deviation. Check Procedure Check point X, Y 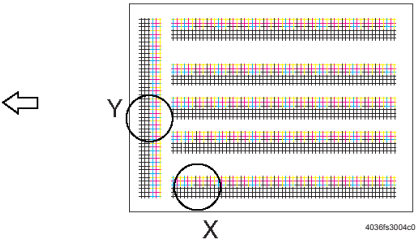 Adjustment for X direction: Check point X If the cross deviates in the direction of C, increase the setting. If the cross deviates in the direction of D, decrease the setting. Direction of C 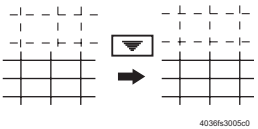 Direction of D 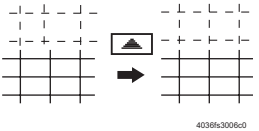 Adjustment for Y direction: Check point Y If the cross deviates in the direction of C, increase the setting. If the cross deviates in the direction of D, decrease the setting. Direction of C 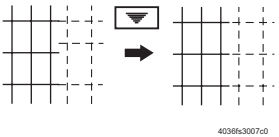 Direction of D 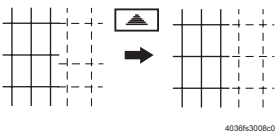

10.4.9 Fusing Loop Size

Functions	• To vary the timing to start fusing loop processing and adjust the fusing loop size at envelope printing.
Use	• To be used when paper wrinkle or transfer misalignment occur at envelope printing. Adjustment in +: Delay the timing to start fusing loop processing Adjustment in -: Put ahead the timing to start fusing loop processing
Setting/ Procedure	• The default setting is 0. “0” (-2 to +2)

10.4.10 Manual Bypass Tray Adjustment

Functions	• To set the maximum width and the minimum width for the manual bypass paper size unit of the manual bypass guide
Use	• Use when the manual bypass paper size unit of the manual bypass guide has been changed. • Use when a false paper size is displayed when the manual bypass is used.
Setting/ Procedure	*1.* Call the Service Mode to the screen. *2.* Touch these keys in this order: [Machine] → [Manual Bypass Tray Adjustment]. *3.* Touch [Max. Width]. *4.* Load the bypass tray with paper having a width of 301 mm. *5.* Press the Start key and check that the results are [OK]. *6.* Touch [Min. Width.]. *7.* Load the bypass tray with paper having a width of 89 mm. *8.* Press the Start key and check that the results are [OK]. ✻ Make the adjustment again if the results are [NG].

10.4.11 Lead Edge Erase Adjustment

Functions	• To set the leading edge erase amount of the paper.
Use	• To change the width of the area not printed along the leading edge of the paper
Setting/ Procedure	• The default setting is 4 mm. “4 mm” 5 mm 7 mm

10.4.12 Thin Line Prior Detection

Functions	• To check the stain on the ADF original glass and display the result.
Use	• To manually perform the pre-detection of the stain which is normally conducted when the main/sub power switch is turned ON, recovering from the sleep/low power mode, etc. • [Thin Line Prior Detection] will be conducted with the detection level set by the following setting. [Service Mode] → [System 2] → [Thin Line Detect. Setting] → [Prior Detection] When the above setting is set to “Not Set”, “NG” will be displayed even though the pre-detection is conducted.
Setting/ Procedure	*1.* Call the Service Mode to the screen. *2.* Touch [Thin Line Prior Detection]. *3.* Press the start key to start the pre-detection. *4.* Check to make sure that “OK” is displayed for the result. * When the result says “NG”, clean the glass and check again.

10.5 Firmware Version

Functions	• To check the firmware version.
Use	• Use when the firmware is upgraded. • When the firmware is upgraded or PWB is replaced.
Setting/ Procedure	*1.* Call the Service Mode to the screen. *2.* Touch [Firmware Version]. *3.* Select the appropriate key from 1 to 3 to check the Firmware Version.

10.6 Imaging Process Adjustment

10.6.1 Gradation Adjust

- It will not be displayed when the following setting is set to “ON”.
  [Service Mode] → [Image Process Adjustment] → [Dev. Bias Choice]

Functions	• To make an automatic adjustment of gradation based on the test pattern produced and the readings taken by the Scanner
Use	• Color reproduction performance becomes poor. • The IU has been replaced. • The image transfer belt unit has been replaced. ✻ The Adj. Values of “Dark” and “Highlight” shown on the gradation adjust screen represent how much corrections are made to produce an ideal image output. Conv. Value shows the difference from the ideal image density. ✻ The closer the Conv. Value to 0, the more ideal the image. • Gradation Mode : It gives the highest priority to gradation performance of the image as it adjusts. • Resolution Mode : It gives the highest priority to reproduction performance of letters and lines as it adjusts. • High Compression Mode : It gives the highest priority to increasing the number of images to be stored in the memory as it adjusts.
Adjustment Specification	Dark : 0 ± 100 Highlight : 0 ± 60
Setting/ Procedure	**NOTE** • **Before conducting the gradation adjustment, make sure to turn main power switch OFF to stabilize the image. Wait for more than ten seconds and turn main power switch back ON.** *1.* Touch [Gradation Adjust]. *2.* Select the appropriate mode for the gradation adjustment. *3.* Press the Start key to let the machine produce a test pattern. *4.* Place the test pattern produced on the original glass. *5.* Place ten blank sheets of A3/11x17 paper on the test pattern and lower the original cover. *6.* Press the Start key. (The machine will then start scanning the test pattern.) *7.* Touch [OK] and repeat steps from 2 through 6 twice (a total of three times). *8.* Touch [Gradation Adjust] to display the Adj. Values and Conv. Values of each color (C, M, Y and K) for Dark and Highlight. *9.* Use the following procedures to check the Conv. Value. **Dark: 0 ± 100 and Highlight: 0 ± 60: It completes the adjustment procedure.** **If neither Dark nor Highlight falls outside the ranges specified above: Perform steps from 2 to 6.** **NOTE** • **If the convergence falls within the specified range after the second Gradation Adjustment, further adjustment may not be necessary.** • If a fault is detected, “0” is displayed for all values. In that case, after turning off the main power switch, turn it on again more than 10 seconds after and then make the gradation adjustment again. • If either Dark or Highlight still remains outside the specified ranges perform D Max Density. • If a total of four sequences of gradation adjust do not bring the values into the specified range, check the image. • If the image is faulty, perform the troubleshooting procedures for image problems.

10.6.2 D Max Density

Functions	• To adjust gradation, color, and image density to target reproduction levels by varying the maximum amount of toner sticking to paper through auxiliary manual fine-adjustment of gamma of each color after gradation adjust.
Use	• An image quality problem is not corrected even after gradation adjust has been run.
Adjustment Range	"0" (-10 to +10)
Adjustment Instructions	To increase the maximum amount of toner sticking, increase the setting value. To decrease the maximum amount of toner sticking, decrease the setting value.
Setting/ Procedure	*1.* Call the Service Mode to the screen. *2.* Touch these keys in this order: [Imaging Process Adjustment] → [D Max Density]. *3.* Select [COPY] or [Printer]. *4.* Select the color to be adjusted. *5.* Enter the new setting from the 10-key pad or [+/-]. *6.* Touch [END] to return to the [Process] menu screen. *7.* Touch [Stabilizer]. *8.* Touch [Stabilizer Mode]. *9.* Press the Start key to validate the adjustment value. *10.*Check the copy image for any image problem. **NOTE** • **If the setting value has been changed, be sure to run an image stabilization sequence to make valid the new value.**

10.6.3 Background Voltage Margin

Functions	• To adjust the highlight portion (fog level) to the target reproduction level by making an auxiliary manual fine-adjustment of γ of each color after gradation adjust.
Use	• Use when a foggy background occurs due to a printer problem
Adjustment Range	"0" (-5 to +5)
Adjustment Instructions	To make the background level foggier, increase the setting value. To make the background level less foggy, decrease the setting value.
Setting/ Procedure	*1.* Call the Service Mode to the screen. *2.* Touch these keys in this order: [Imaging Process Adjustment] → [Background Voltage Margin]. *3.* Select the color to be adjusted. *4.* Enter the new setting from the 10-key pad. *5.* Touch [END] to return to the [Image Adjust] menu screen. *6.* Touch [Stabilizer]. *7.* Touch [Stabilization Only]. *8.* Press the Start key to validate the adjustment value. *9.* Check the copy image for any image problem. **NOTE** • **If the setting value has been changed, be sure to run an image stabilization sequence to make valid the new value.**

10.6.4 Transfer Output Fine Adjustment

A. 2nd Transfer Adjust

Functions	• Adjust the 2nd image transfer output (ATVC) on the 1st page and the 2nd page for each paper type.
Use	• To use when the transfer failure at the trailing edge occurs.
Adjustment Range	"0" (-5 to +5)
Adjustment Instructions	To increase the ATVC value (in the direction of a foggier image), decrease the setting value. To decrease the ATVC value (in the direction of a less foggy image), increase the setting value.
Setting/ Procedure	*1.* Call the Service Mode to the screen. *2.* Touch these keys in this order: [Imaging Process Adjustment] → [Transfer Output Fine Adjustment]. *3.* Select the side of the image (1st side or 2nd side), on which the transfer failure at the trailing edge occurs. *4.* Select the paper type with the transfer failure at the trailing edge. *5.* Enter the new setting from the [+] / [-] keys. *6.* Touch [END] to validate the adjustment value. *7.* Check the copy image for any image problem.

B. 1st Transfer Adjust

Functions	• Adjust the output value for the 1st image transfer voltage.
Use	• To use when white spots appeared.
Adjustment Range	"0" (-5 to +5)
Adjustment Instructions	Adjust the output value for the 1st image transfer voltage by; Increasing it: Increase the setting value (white spots will decrease) Decreasing it: Decrease the setting value
Setting/ Procedure	*1.* Call the Service Mode to the screen. *2.* Select [Test Mode] → [Halftone Pattern] to output the red or green test pattern. See P.378 *3.* When the test pattern image has white spots, adjust with the following procedure. *4.* Touch these keys in this order: [Imaging Process Adjustment] → [Transfer Output Fine Adjustment]. *5.* Select [1st transfer Adjust]. *6.* Change the setting value using the [+] / [-] keys. *7.* Touch [OK] key to set the adjustment value. Gradually increase the adjustment value to the acceptable white spots level while checking the test pattern. **NOTE** • **PC Drum memory (94 mm pitch) may occur by taking measure to white spots occurred by increasing the 1st image transfer voltage to adjust it. Check the image on the test print or the color chart when adjusting.**

10.6.5 Stabilizer

A. Stabilization Only

Functions	• The image stabilization sequence is carried out without clearing the historical data of image stabilization control.
Use	• Use if an image problem persists even after gradation adjustment has been executed. • When [D Max Density] and [Background Voltage Margin] of Service Mode are changed.
Setting/ Procedure	*1.* Call the Service Mode to the screen. *2.* Touch these keys in this order: [Imaging Process Adjustment] → [Stabilization Only]. *3.* Press the Start key to start Stabilizer. The Start key turns orange and stays lit up orange during the Stabilizer sequence. *4.* Stabilizer is completed when the Start key turns green.

B. Initialize+Image Stabilization

Functions	• To carry out an image stabilization sequence after the historical data of image stabilization control has been initialized.
Use	• Use if an image problem persists even after gradation adjustment has been executed. • Use if tone reproduction and maximum density are faulty even after Stabilizer Mode has been executed. • Use when adjusting the PH skew.
Setting/ Procedure	*1.* Call the Service Mode to the screen. *2.* Touch these keys in this order: [Imaging Process Adjustment] → [Initialize+Image Stabilization]. *3.* Press the Start key to start stabilizer. The Start key turns orange and stays lit up orange during the Stabilizer sequence. *4.* Stabilizer is completed when the Start key turns green.

1 C. Span

Functions	• Setting the period of the cycle for image stabilization
Use	• To use when making the period of the cycle before the image stabilization longer. 1: Image stabilization will be conducted by the normal cycle. 2: Image stabilization will be conducted by the longer period of the cycle.
Adjustment Procedure	• The default setting is 1. "1" 2

10.6.6 Thick Paper Density Adjustment

Functions	• To fine-adjust density of printed images of each color for thick paper and OHP transparencies.
Use	• To change the density of the printed image for each color with thick paper and OHP transparencies
Adjustment Range	Lighter (5 steps), “Std”, Darker (5 steps)
Adjustment Instructions	Light color: Touch the Darker key. Dark color: Touch the Lighter key.
Setting/ Procedure	*1.* Call the Service Mode to the screen. *2.* Touch these keys in this order: [Imaging Process Adjustment] → [Thick Paper Density Adjustment]. *3.* Touch the Lighter or Darker key for the desired color to correct the image density.

10.6.7 TCR Toner Supply

Functions	• To adjust the set T/C level by replenishing an auxiliary supply of toner when a low ID occurs due to a lowered T/C after large numbers of copies have been made of originals having a high image density.
Use	• When there is a drop in T/C.
Setting/ Procedure	*1.* Call the Service Mode to the screen. *2.* Touch these keys in this order: [Imaging Process Adjustment] → [TCR Toner Supply]. *3.* Select the color, for which supply of toner is to be replenished. *4.* Pressing the Start key will let the machine detect the current toner density and; if the density is lower than a reference value, a toner replenishing sequence and then a developer agitation sequence are run. *5.* These sequences are repeated up to a maximum of four times until the toner density reaches the reference value. If the toner density is found to be higher than the reference value, only a developer agitation sequence is carried out.

10.6.8 Monochrome Density Adjustment

Functions	• To fine-adjust the density of the printed image for a black copy
Use	• To vary the density of the printed image of a black copy
Adjustment Range	Lighter (2 steps), “Std”, Darker (2 steps)
Adjustment Instructions	If the black is light, touch the Darker key. If the black is dark, touch the Lighter key.
Setting/ Procedure	*1.* Call the Service Mode to the screen. *2.* Touch these keys in this order: [Imaging Process Adjustment] → [Monochrome Density Adjustment]. *3.* Touch [Lighter] or [Darker] as necessary to correct the image density.

10.6.9 Dev. Bias Choice

Functions	• To change the setting of the developing bias voltage • When this function is turned ON, it decreases the developing bias voltage, thereby preventing voltage leak from occurring.
Use	• Use when patches of white occur in the image in an ambience of low atmospheric pressure, such as in high altitudes. • If ON is set, the screen doesn't display [Service Mode] → [Imaging Process Adjustment] → [Gradation Adjust] and the Gradation Adjust is not allowed.
Setting/ Procedure	• The default setting is OFF. ON “OFF”

10.7 CS Remote Care

10.7.1 Outlines

- CS Remote Care enables the machine and the computer at CS Remote Care center to exchange data through telephone/fax line in order to control the machine.
- CS Remote Care enables the machine to call the computer at the center when trouble occurs. It also enables the computer at the center to contact the machine for the necessary data.
- Data which CS Remote Care handles can be divided into the following groups.
  a. Data which show the status of use of the machine such as total count, PM count.
  b. Data which show the abnormal situation on the machine such as where and how often errors occur.
  c. Data on adjustment
  d. Data on setting

NOTE

- **It cannot be set when the following setting is set to "ON".**
  [Administrator Setting] → [Security Setting] → [Enhanced Security Mode]

10.7.2 Setting up the CS Remote Care

NOTE

- **For resetting up the machine which CS Remote Care has already been set up, clear the RAM for CS Remote Care before resetting.**
  See P.339
- **When using the telephone line for connection, use the recommended modem. (For recommended modem, contact responsible person of KONICA MINOLTA.)**

Step	Procedure		
	Using the telephone line modem	Using the Fax line modem *1	Using E-mail
0	Register the device ID to the application at CS Remote Care center. The initial connection is not available unless the device ID is registered.		
1	Connecting the modem Turn the power for the modem OFF. Connect the machine and the modem with a modem cable. Connect the modem and the wall jack with a modular cable. * For connecting the modular cable, see the manual for the modem.	Be sure to remove the telephone line modem when the fax line is used.	Be sure to remove the telephone line modem when e-mail is used.
2	Clearing the RAM *1.* Select [Service Mode] → [CS Remove Care], and touch [Detail Setting]. *2.* Touch [RAM Clear]. *3.* Select Set, and touch [OK]. See P.339		

Step	Procedure		
	Using the telephone line modem	Using the Fax line modem *1	Using E-mail
3	Selecting the CS Remote Care function Select [Service Mode] → [CS Remove Care] → [System Selection], and touch [Modem].	Selecting the CS Remote Care function Select [Service Mode] → [CS Remove Care] → [System Selection], and touch [Fax].	Selecting the CS Remote Care function Select [Service Mode] → [CS Remote Care] → [System Setting], and touch [E-Mail].
4	Inputting the ID Code *1.* Select [Service Mode] → [CS Remote Care] → [ID Code], and touch [ID Code]. *2.* Input the seven digits ID of the service person, and touch [ID Code] again. See P.338		
5	Setting the date and time for CS Remote Care *1.* Select [Service Mode] → [CS Remote Care], and touch [Detail Setting]. *2.* Touch [Date & Time Setting]. *3.* Input the date, time and the time zone using the 10-key pad, and touch [Set]. See P.339		
6	Setting the Center ID *1.* Select [Service Mode] → [CS Remote Care], and touch [Detail Setting]. *2.* Touch [Machine Setting] → [Center ID], and input the Center ID (five digits). See P.339		
7	Setting the Device ID *1.* Select [Service Mode] → [CS Remote Care], and touch [Detail Setting]. *2.* Touch [Machine Setting] → [Device ID], and input Device ID (nine digits). See P.339		
8	Setting the telephone number of the Center *1.* Select [Service Mode] → [CS Remote Care], and touch [Detail Setting]. *2.* Touch [Machine Setting] → [Center Telephone Number]. *3.* Input the telephone number of the center using the 10-keys pad and [P], [T], [W], [-]. See P.339		Setting the Respond Timeout *1.* Select [Service Mode] → [CS Remote Care], and touch [Detail Setting]. *2.* Touch [Respond Timeout] and enter the response timeout using the 10-key pad. **NOTE** • **Under normal conditions, there is no need to change the default setting.** See P.339
9	Inputting the device telephone number *1.* Select [Service Mode] → [CS Remote Care], and touch [Detail Setting]. *2.* Touch [Machine Setting] → [Device Telephone Number]. *3.* Input the Device telephone number using the 10-key pad and [P], [T], [W], [-]. See P.339		Proceed to step 10.

Step	Procedure		
	Using the telephone line modem	Using the Fax line modem *1	Using E-mail
10	Inputting the AT command for initializing the modem *1.* Select [Service Mode] → [CS Remote Care] → and touch [Detail Setting]. *2.* Touch [AT Command]. *3.* Input AT Command. **NOTE** • **Change this command only when it is necessary. (They do not need to be changed in normal condition.)** • **For details on AT command, see the manual for the modem.** See P.340	Proceed to step 11.	Setting the E-mail address *1.* Select [Service Mode] → [CS Remote Care], and touch [Server Set]. *2.* Touch [Server for RX], and set POP3 server address, POP3 login name, POP3 password and POP3 port number. See P.340 *3.* Press [Receive], and set the E-Mail address, Mail Check, Connection Time Out and APOP Authentication. See P.340 *4.* Touch [Send], and set the SMTP server address, SMTP port number, Connection Time Out, and APOP Authentication. See P.340 *5.* Touch [TX/RX Test], and press Start key to carry out a transmission/reception test. If it fails to exchange messages, see the error message to take necessary measure, and try again. See P.340
11	Setting the DIPSW for CS Remote Care **NOTE** • **This setting is not normally necessary. Take this step only when necessary in a specific connecting condition.**		Proceed to step 12.
12	Executing the initial transmission *1.* Select [Service Mode] → [CS Remote Care], and touch [Detail Setting]. *2.* Touch [initial transmission] key on the right bottom of the screen to start initial transmission. *3.* When the machine is properly connected with the center, CS Remote Care setting screen will be displayed. **NOTE** • **The initial transmission key at the right bottom of the screen will be displayed only when the center ID, the device ID, Telephone number of the center and the device telephone number have been input.** See P.339		Receiving the initial connection E-mail message Sending the initial connection E-mail message from the center to the address of the copier. **NOTE** • **When receiving the initial connection E-mail message from the center while CS Remote Care-related screen is being displayed, the current setting information will be deleted, and CS Remote Care setting will be displayed.** • **For sending the initial connection E-mail, see the manual for CS Remote Care center.** • **Messages can be exchanged only between the center with initial connection and the copier.** • **The initial connection from the center will be carried out, and the E-mail address of the center will be stored in the copier.** • **When the initial registration is complete, the E-mail address of the center will be displayed by selecting [Service Mode] → [CS Remote Care] → [Detail Setting], [Basic Setting] → [E-Mail address].**

10.7.3 Software SW setting for CS Remote Care

NOTE

- **SW bits data are written into the NVRAM every time a change is made. In case you changed bit data by accident, be sure to restore the previous state.**

A. Input procedure

1. Select [Service Mode] → [CS Remote Care] → [Detail Setting], and touch [Software Switch Setting].
2. Touch [Switch No.], and input the switch number (two digits) using the 10-key pad.
3. Touch [Bit Assignment], and select switch bit number using the arrow keys, and input 0 or 1 using the 10-key pad.
   (For setting by hexadecimal numbers, touch [HEX Assignment] key, and input using the 10-key pad or A to F keys.)
4. Touch [Fix].

NOTE

- **About functions of each switch, see to "B. List of software SW for CS Remote Care."**

B. List of software SW for CS Remote Care

NOTE

- **Do not change any bit not described on this table.**

SW No.	Bit	Functions	0	1	Default
SW 01	0	Dial mode	Pulse	Tone	1
	1	Reservation	—	—	0
	2	Reservation	—	—	0
	3	Reservation	—	—	0
	4	Baud rate	*1	*1	0
	5		*1	*1	0
	6		*1	*1	0
	7		*1	*1	1
SW 02	0	Emergency transmission	Do not call	Call	1
	1	Auto call on date specification	Do not call	Call	1
	2	Reservation	—	—	0
	3	Reservation	—	—	0
	4	Reservation	—	—	0
	5	Auto call on the IC Life	Do not call	Call	1
	6	Auto call on CCD clamp/gain adjustment failure	Do not call	Call	1
	7	Reservation	—	—	0
SW 03	0	Reservation	—	—	0
	1	Auto call on the toner empty	Do not call	Call	1
	2	Reservation	—	—	0
	3	Auto call on the waste toner bottle full	Do not call	Call	1
	4 to 7	Reservation	—	—	0
SW 04	0 to 7	Reservation	—	—	0

SW No.	Bit	Functions	0	1	Default
SW 05	0	Modem redial interval	*2	*2	1
	1		*2	*2	1
	2		*2	*2	0
	3		*2	*2	0
	4 to 7	Reservation	—	—	0
SW 06	0	Modem redial times	*3	*3	0
	1		*3	*3	1
	2		*3	*3	0
	3		*3	*3	1
	4		*3	*3	0
	5		*3	*3	0
	6		*3	*3	0
	7	Reservation	—	—	0
SW 07	0	Redial for response time out	Do not redial	Redial	1
	1 to 7	Reserved	—	—	0
SW 08	0	Retransmission interval on e-mail delivery error	*4	*4	0
	1		*4	*4	1
	2		*4	*4	1
	3		*4	*4	0
	4 to 7	Reservation	—	—	0
SW 09	0	Retransmission times on e-mail delivery error	*5	*5	0
	1		*5	*5	1
	2		*5	*5	0
	3		*5	*5	1
	4		*5	*5	0
	5		*5	*5	0
	6		*5	*5	0
	7	Reservation	—	—	0
SW 10	0 to 7	Reservation	—	—	0
SW 11	0	Timer 1 RING reception → CONNECT reception	*6	*6	0
	1		*6	*6	0
	2		*6	*6	0
	3		*6	*6	0
	4		*6	*6	0
	5		*6	*6	1
	6		*6	*6	0
	7		*6	*6	0

SW No.	Bit	Functions	0	1	Default
SW 12	0	Timer 2 Dial request completed → CONNECT reception	*7	*7	0
	1		*7	*7	0
	2		*7	*7	0
	3		*7	*7	0
	4		*7	*7	0
	5		*7	*7	0
	6		*7	*7	1
	7		*7	*7	0
SW 13	0 to 7	Reservation	—	—	0
SW 14	0	Timer 4 Line connection → Start request telegram delivery	*8	*8	0
	1		*8	*8	0
	2		*8	*8	0
	3		*8	*8	0
	4		*8	*8	0
	5		*8	*8	1
	6		*8	*8	0
	7		*8	*8	0
SW 15	0	Timer 5 Wait time for other side's response	*9	*9	0
	1		*9	*9	1
	2		*9	*9	1
	3		*9	*9	1
	4		*9	*9	1
	5		*9	*9	0
	6		*9	*9	0
	7		*9	*9	0
SW 16	0 to 7	Reservation	—	—	0
SW 17	0 to 7	Reservation	—	—	0
SW 18	0	Attention display To set weather to give the alarm display when using the modem but the power for the modem is OFF.	Do not call	Call	1
	1 to 7	Reservation	—	—	0
SW 19 to SW 40	0 to 7	Reservation	—	—	0

*1: Baud rate

Mode	01-7	01-6	01-5	01-4
9600 bps	0	1	1	0
19200 bps	0	1	1	1
“38400 bps”	1	0	0	0

*2: Modem redial interval

Mode	05-3	05-2	05-1	05-0
1 minute	0	0	0	1
2 minutes	0	0	1	0
“3 minutes”	0	0	1	1
4 minutes	0	1	0	0
5 minutes	0	1	0	1
6 minutes	0	1	1	0
7 minutes	0	1	1	1
8 minutes	1	0	0	0
9 minutes	1	0	0	1
10 minutes	1	0	1	0

*3: Modem redial times

Mode	06-6	06-5	06-4	06-3	06-2	06-1	06-0
0 to 9 times	000 0000 to 000 1001						
“10 times”	0	0	0	1	0	1	0
11 to 99 times	000 1011 to 110 0011						

*4: Retransmission interval on e-mail delivery error

Mode	08-3	08-2	08-1	08-0
0 minute	0	0	0	0
10 minutes	0	0	0	1
20 minutes	0	0	1	0
30 minutes	0	0	1	1
40 minutes	0	1	0	0
50 minutes	0	1	0	1
“60 minutes”	0	1	1	0
70 minutes	0	1	1	1
80 minutes	1	0	0	0
90 minutes	1	0	0	1
100 minutes	1	0	1	0
110 minutes	1	0	1	1
120 minutes	1	1	0	0

*5: Retransmission times on e-mail delivery error

Mode	09-6	09-5	09-4	09-3	09-2	09-1	09-0
0 to 9 times	000 0000 to 000 1001						
“10 times”	0	0	0	1	0	1	0
11 to 99 times	000 1011 to 110 0011						

*6: Timer 1 (RING reception → CONNECT reception)

Mode	11-7	11-6	11-5	11-4	11-3	11-2	11-1	11-0
0 to 31 sec	0000 0000 to 0001 1111							
“32 sec”	0	0	1	0	0	0	0	0
33 to 255 sec	0010 0001 to 1111 1111							

*7: Timer 2 (Dial request completed → CONNECT reception)

Mode	12-7	12-6	12-5	12-4	12-3	12-2	12-1	12-0
0 to 63 sec	0000 0000 to 0011 1111							
“64 sec”	0	1	0	0	0	0	0	0
65 to 255 sec	0100 0001 to 1111 1111							

*8: Timer 4 (Line connection → Start request telegram delivery)

Mode	14-7	14-6	14-5	14-4	14-3	14-2	14-1	14-0
0 to 31 (x 100 msec)	0000 0000 to 0001 1111							
“32 (x 100 msec)”	0	0	1	0	0	0	0	0
33 to 255 (x 100 msec)	0010 0001 to 1111 1111							

*9: Timer 5 (Wait time for other side’s response)

Mode	15-7	15-6	15-5	15-4	15-3	15-2	15-1	15-0
0 to 29 sec	0000 0000 to 0001 1101							
“30 sec”	0	0	0	1	1	1	1	0
31 to 255 sec	0001 1111 to 1111 1111							

10.7.4 Setup confirmation

- **Follow the steps below to make sure that CS Remote Care has been properly set up.**

1. Call the Service Mode to the screen.
2. Touch [CS Remote Care].
3. Check to make sure that only selected item is displayed.

10.7.5 Calling the maintenance

- When CE starts maintenance, inputting the ID code of CE (seven digits: numbers which CE can identify. They are controlled by the distributor.) will transmit the information to the Center side and tells that the maintenance has started. When the maintenance is finished, touching [Maintenance Complete] key will transmit the information to the center and tells that it is finished.

A. When starting the maintenance

1. Select Service Mode and touch [CS Remote Care].
2. Touch [ID Code], and input ID Code.
3. Touch [ID Coke].

* The Start key blinks while maintenance is being carried out.

B. When finishing the maintenance

1. Select Service Mode and touch [CS Remote Care].
2. Touch [Maintenance Complete].

10.7.6 Calling the center from the administrator

- When the CS Remote Care setup is complete, the administrator can call the CS Remote Care center.

1. Select [Administrator Setting], and touch [System Connection].
2. Touch [Admin. transmission].
3. Press the Start key.
   When the setup is not complete or another transmission is being carried out, the Admin. transmission key will not be displayed, and the transmission is not available.

NOTE

- **For transmitting data of the machine by calling the center on the specified date and time, refer to the manual for CS Remote Care center.**

10.7.7 Checking the transmission log

- The transmission log list will be output to be checked.

1. Select [Service Mode] → [CS Remote Care], and touch [Detail setting].
2. Touch [Communication Log Print].
3. Load tray 1 or bypass tray with A4S paper.
4. Press the Start key to output transmission log.

10.7.8 Detail on settings

A. System Selection

Functions	• To select the system type for remote diagnosis.
Use	• Use to newly build or change the system.
Setting/ Procedure	• Select E-Mail, Modem, or Fax. • Fax is available only when the optional fax kit is being installed. E-Mail (Not Used) Modem Fax

B. ID Code

Functions	• To register the service ID.
Use	• Use when registering and changing service ID.
Setting/ Procedure	• Enter a 7-digit code from the 10-key pad. (0000001 to 9999999) <Registration> • Touch ID code and enter the service ID. • Touch [ID code] to register the ID. • The [Detail Setting] will appear when the ID has been registered.

C. Detail Setting

(1) Basic Setting

Functions	• Execute the primary setting.
Use	• Use to change the set contents. • Use to register the machine to the CS Remote Care center.
Setting/ Procedure	*1.* Call the Service Mode to the screen. *2.* Touch [CS Remote Care]. *3.* Touching the [Detail Setting] will display the primary setting. Primary Setting • Set the center ID, Device ID, and the phone No. • When e-mail is selected for system and all setup procedures are completed, e-mail address of the center is displayed. * When entering the phone number, 10-keys and keys on the screen have following meanings. [-] Pose : Waits to start transmitting after dialing [W] Wait : Detects the dial tone of the other end [T] Tone dial : Carry out tone dialing [P] Pulse dial : Carry out pulse dialing [*],[#] : To be used as necessary Initial Transmission • Touching the Initial Transmission key will sent the information to the CS Remote Care center to register the machine. (Only when the modem or fax is selected on the system Input.)

(2) Date & Time Setting

Functions	• To set the data and time-of-day
Use	• Use to set or change the date and time-of-day.
Setting/ Procedure	*1.* Call the Service Mode to the screen. *2.* Touch [CS Remote Care]. *3.* Touch [Detail Setting] to access Date & Time Setting. *4.* Enter the date (month, day and year), time-of-day, and the time zone from the 10-key pad. *5.* Touch [SET] to start the clock.

(3) RAM Clear

Functions	• To clear the following data at the center ID Code, Primary Setting, Date/Time Input (Time Zone), Software SW Setting and AT Command.
Use	• To be used for setting CS Remote Care. • To be used for reset the every data of the center to default. **NOTE** • **If RAM clear is selected during transmission, RAM clear processing will be implemented at the time the transmission is completed regardless of whether it is done properly or not.**
Setting/ Procedure	• The default setting is “Unset.” Set “Unset”

(4) Communication Log Print

Functions	• To print out the communication log.
Use	• Use to output and use the communication log.
Setting/ Procedure	*1.* Call the Service Mode on the screen. *2.* Touch [CS Remote Care]. *3.* Touch [Detail Setting] to access communication log print. *4.* Load tray 1 or bypass tray with A4S or $8^1/_2$ x 11 paper. *5.* Press Start key to print out the communication log.

(5) Software Switch Setting

Functions	• To change the CS Remote Care settings.
Use	• To change the settings for CS Remote Care as necessary.
Setting/ Procedure	• Refer to “Software SW setting for CS Remote Care” for the setting. See P.332

(6) Response Time Out

Functions	• It sets the intervals for resending e-mails when transmission error occurred. • It can be set only when [E-Mail] is selected by System Setting.
Use	• To use when changing the intervals for resending e-mails when transmission error occurred.
Setting/ Procedure	• The default setting is 60 minute. “60 minute” (10 to 1440)

D. AT Command

Functions	• To set the command to be issued at the time of modem initialization. • This setting is available only when [Modem] is selected for the system setting.
Use	• To set the command to be issued at the time of modem initialization.
Setting/ Procedure	• Enter the command and touch [SET] to register.

E. Server Setting

• Server Setting can be set only when [E-Mail] is selected by System Setting.

(1) Server for RX

<POP3 server>

Functions	• To set the POP3 server address used for the CS Remote Care.
Use	• To set the address of the POP3 Server. • POP3 server address can be set with IP address or the domain name.
Setting/ Procedure	<Input IP Address> • IP address version 4 format [0 to 255].[0 to 255].[0 to 255].[0 to 255] <Input FQDN> • Enter the domain name.

<POP3 login name>

Functions	• To set the logon name for the POP3 server used for the CS Remote Care.
Use	• To set the logon name for the POP3 server.
Setting/ Procedure	• The default setting is No. • Up to 64 characters (alphanumeric characters and symbols) can be used.

<POP3 password>

Functions	• To set the logon password for the POP3 server used for the CS Remote Care.
Use	• To set the logon password for the POP3 server.
Setting/ Procedure	• The default setting is No. • Up to 15 characters (alphanumeric characters and symbols) can be used.

<POP3 port number>

Functions	• To set the POP3 port number used for the CS Remote Care.
Use	• To set the port number for the POP3 server.
Setting/ Procedure	• The default setting is 110. "110" (1 to 65535)

(2) Receive

<E-mail Address>

Functions	• To set the e-mail address used for the CS Remote Care.
Use	• To set the e-mail address.
Setting/ Procedure	• The default setting is No. • Up to 129 characters (alphanumeric characters and symbols) can be used.

<Mail Check>

Functions	• To set whether or not to use mail check and the time interval for the POP server used for the CS Remote Care.
Use	• To set whether or not to use mail check and the time interval for the POP server used for the CS Remote Care. • To change the time interval for mail check.
Setting/ Procedure	• The default setting is No. "No" (1 to120 min., No)

<Connection timeout>

Functions	• To set the timeout period for connection during reception.
Use	• To change the timeout period for connection during reception.
Setting/ Procedure	• The default setting is 60 Sec. "60 Sec" (30 to 300 Sec)

<APOP Authentication>

Functions	• To set whether or not to authenticate the APOP during reception.
Use	• To authenticate the APOP during reception.
Setting/ Procedure	• The default setting is No. Yes “No”

(3) Send

<SMTP server>

Functions	• To set the SMTP sever address for transmission used for the CS Remote Care.
Use	• To set the SMTP server address • SMTP server address can be set by the IP address or the domain name.
Setting/ Procedure	<Input IP Address> • IP address version 4 format [0 to 255].[0 to 255].[0 to 255].[0 to 255] <Input FQDN> • Enter the domain name.

<SMTP port number>

Functions	• To set the SMTP port number for transmission used for the CS Remote Care.
Use	• To set the Port Number of the SMTP Server.
Setting/ Procedure	• The default setting is 25. “25” (1 to 65535)

<SMTP Connection Time-out>

Functions	• To set the timeout period for transmission.
Use	• To change the timeout period for connection during transmission.
Setting/ Procedure	• The default setting is 60 Sec. “60 Sec” (30 to 300 Sec)

<Authentication Setting>

Functions	• To set whether or not to authenticate during transmission via SMTP server.
Use	• To use when authenticating during transmission. Available authentication mode: POP Before SMTP, SMTP authentication
Setting/ Procedure	• The default setting is OFF. "OFF" POP Before SMTP SMTP Authentication * Setting to "POP Before SMTP" will set the time for POP Before SMTP. • The default setting is 60 Sec. "60 Sec" (0 to 60 Sec) * When setting to SMTP authentication, touch the "Setting Check" key for authentication. User ID : Enter the user ID for SMTP authentication. Password : Enter the password for SMTP authentication. Domain name : Enter the domain name for SMTP authentication.

(4) TX/RX Test

Functions	• To determine the correct transmission and reception using CS Remote Care.
Use	• Use to determine the correct transmission and reception using CS Remote Care.
Setting/ Procedure	• Press the Start key to let the machine start the transmission and reception test. • The test procedure and result will be displayed on the screen.

(5) Data Initialization

Functions	• To initialize the contents for the sever setting.
Use	• Use to initialize the contents for the server setting.
Setting/ Procedure	• The default setting is No. Yes "No"

10.7.9 List of the CS Remote Care error code

A. When connecting by modem

Error code	Error	Solution
0001	The line is busy (Busy detection)	• Transmit again manually.
0002	Failure of the Modem default setting at transmitting (When the transmission completes with modem initial setting failed)	• Check if the power of the modem is ON. • Check the connecting condition between the modem and the main unit.
0003	Timeout of CONNECT at transmitting (No response to ATD)	• Transmit again manually • Check if the power of the modem is ON. • Check the connecting condition between the modem and the main unit.
0005	Timeout of CONNECT at receiving (No response to ATA)	• Check if the power of the modem is ON. • Check the connecting condition between the modem and the main unit.
0006	Shut down of the data modem line (Host) (Carrier OFF is detected)	• No solution, because the line is shut down at the host side.
0008	Timeout of start request telegram delivery (Start request telegram is not delivered after line connection)	• Transmit again manually.
0009	Timeout of finish request telegram delivery (Finish request telegram is not delivered (Start of shut down).)	• Transmit again manually.
000A	Receiving rejection (Receiving is made when the main unit is set to reject receiving.)	• Check the setting condition of the host side. • Check the setting condition of the main unit side.
000B	RS232C driver over run (When the modem detects over run.)	• If the same error is detected several times, turn the modem power OFF and ON.
000C	If the same error is detected several times, turn the modem power OFF and ON.	• If the same error is detected several times, turn the modem power OFF and ON.
000D	Break Interrupt (BI) indicator (When the modem detects Break Interrupt (BI) indicator.)	• If the same error is detected several times, turn the modem power OFF and ON.
0011	Baud rate ERROR (When selected baud rate is out of the specification (9600 bps to 38400 bps).)	• Check the baud rate of the software DipSW.
0018	Machine ID has already been registered (Request telegram 2 (SET-UP) comes from the main unit that has already registered machine ID.)	• Set the initial registrations again for all including the host side.
0019	Center ID error (Center ID of the host is not identical with the one of start request telegram.)	• Check center ID setting of the main unit side. • Check center ID setting of the main unit side.

Error code	Error	Solution
001A	Device ID inconsistency (Device ID of the host is not identical with the one of start request telegram.)	• Check device ID setting of the main unit side. • Check the setting of the host side.
001B	Device ID unregistered (Request telegram 2 (Constant data transmitting, emergency call) comes from the main unit that has not registered machine ID yet.)	• Check device ID setting of the main unit side. • Check the setting of the host side.
001E	Impossible to change (during printing) (Setting cannot be changed because the setting change is made during the machine is printing or starts printing.)	• Try again when the machine is not printing.
0020	Timeout of telegram delivery (At waiting mode of telegram delivery the machine fails to receive the telegram in a given time.)	• Try communication again.
0027	Transmission / receiving collision (Receiving is detecting during transmitting processing)	• Try communication again.

NOTE

- **When a code other than the ones listed above is displayed, contact KONICA MINOLTA and inform the error code.**

B. When connecting by e-mails

Error code	Error	Solution
0001	Connection timeout during transmission	• Check the SMTP server on User side.
0###	Transmission error ***: SMTP responding code (hexadecimal)	• Check the SMTP server on User side.
0003	Connection timeout when receiving	• Check the POP3 server on User side.
0005	Receiving error	• Check the POP3 server on User side.
1030	Machine ID mismatching • Received an e-mail which tells that machine ID mismatches.	• Check the machine ID setting. • Check the machine ID setting on host side.
1062	Modifying not available due to the copy job currently performing • When informing the host that it cannot be modified due to the copy job currently performing.	• Ask the host to send another instruction mail for modifying.
1081	Frame No. error • The last frame has not been received. • There are missing frame No.	• Check the status of the machine registration on host side.
1084	Date expired • Expiration date for data modification command has passed.	• Ask the host to send another instruction mail for modifying.
1092	Received an error mail when center setup is not complete	• Check the status of the machine registration on host side.
2039	Socket is not connected. • LAN cable on the copier side is detached.	• Check the SMTP server and POP3 server on user side.
203E	Network is down. • LAN cable on the copier side is detached.	• Check the connection between the copier on the user's side and the network connector. • Check the network environment on the user's side.
3000	POP3_AUTHORIZATION_ERR	• Check the POP3 server environment on user's side.
3001	POP3_TRANSACTION_ERR	• Check the POP3 server environment on user's side.
3002	POP3_CONNECT_ERR	• Check the POP3 server environment on user's side.
3003	POP3_TIMEOUT_ERR	• Check the POP3 server environment on user's side.
3004	POP3_FORMAT_ERR	• Check the POP3 server environment on user's side.
3005	POP3_MEMORY_ERR	• Check the POP3 server environment on user's side.
3006	POP3_JOBID_ERR	• Check the POP3 server environment on user's side.
3007	POP3_NO_DATA_ERR	• Check the POP3 server environment on user's side.

Error code	Error	Solution
3008	POP3_DELETE_FAIL_ERR	• Check the POP3 server environment on user's side.
3009	POP3_MAILBOX_FULL	• Check the POP3 server environment on user's side.
4103	Not ready • Tried to transmit or receive an e-mail when the machine was not yet in the e-mail receiving status after power was turned ON.	• Wait for a while and try transmitting again.
4104	SMTP channel not ready	• Wait for a while and try transmitting again.
4105	POP3 channel not ready	• Wait for a while and try transmitting again.
4106	Not Ready other than the ones listed above.	• Wait for a while and try transmitting again.

NOTE

- **When a code other than the ones listed above is displayed, contact KONICA MINOLTA and inform the error code.**

C. When connecting by Fax modem

Error code	Error	Solution
T50	Host terminal ID not correct	• Check the telephone number set for host.
R80	Serial number received from the host not correct.	• Check the status of the Machine registration on host side.
R81	Disconnection of writing instruction from host during machine is running.	• Wait for a while and try transmitting again.
R82	Disconnection of FAX-CSRC instruction when FASX-CSRC is not allowed.	• Check the status of the Machine registration on host side.
R83	Host command error.	• Contact KONICA MINOLTA and inform the error code.
R84	NVRAM writing error.	• Contact KONICA MINOLTA and inform the error code.

NOTE

- **When a code other than the ones listed above is displayed, see the FK-502 Service Manual.**

10.7.10 Troubleshooting for CS Remote Care

If communication is not done properly, check the condition by following the procedures shown below.

1. Shift the screen in the order of [Service Mode] → [CS Remote Care] → [Detail Setting]. At this time, in the cases of initial transmitting / administrator transmitting / maintenance start transmitting / maintenance finish transmitting, the communication result will be displayed at the top of the screen.

* For the communication result, the following message will be displayed based on its success or failure.

Display of communication result	Cause	Solution
Communicating	—	—
Communication trouble with the center	Although the machine tries to communicate with the center, there is any trouble and the communication completes unsuccessfully.	• See the list of error message and confirm the corresponding point. See P.344
Complete successfully	—	—
Modem trouble	Although the machine tries to communicate with the center, there is any trouble in the modem.	• Check if the power of modem in ON. • Check if there is any problem in connection between the modem and the main unit.
Busy line	Although the machine tries to communicate with the center, the line to the center is busy.	• Communicate with the center again.
No response	Although the machine tries to communicate with the center, there is no response from the center.	• Communicate with the center again. • Check the communication environment of the center side.

10.8 System 1

10.8.1 Marketing Area

Functions	• To make the various settings (language, paper size, fixed zoom ratios, etc.) according to the applicable marketing area.
Use	• Upon setup.
Setting/ Procedure	<Marketing Area> • Select the applicable marketing area and touch [END] to set the marketing area. JAPAN US Europe Others1 Others2 Others3 Others4 ✻ These are the languages that can be selected on the Utility screen according to different marketing area settings:

Japan	English, Japanese
US	English, French, Spanish, Japanese
Europe	English, French, Italian, German, Spanish, Japanese
Others1	English, French, Spanish, Japanese
Others2	English, Japanese, German, French, Italian, Spanish
Others3	
Others4	

<Fax Target>
1. Touch the [Fax Target].
2. Select the applicable marketing area using [+] and [-] keys, and touch [END].

10.8.2 Tel/Fax Number

Functions	• To enter the tel/fax number of the service contact that will appear on the control panel when a malfunction occurs in the machine.
Use	• Upon setup.
Setting/ Procedure	• Enter the tel/fax number (19 digits) from the 10-key pad. • Use Interrupt key to enter "-."

10.8.3 Serial Number

Functions	• To register the serial numbers of the machine and options. • The numbers will be printed on the list output.
Use	• Upon setup. **NOTE** • **When main power switch was turned ON while the serial No. was not entered (including initial status), the message to require entering the serial No. will be displayed. Make sure to enter the serial No. at setup.**
Setting/ Procedure	• Type the serial numbers. 9 digits (0 to 9) Printer, Scanner, ADF, LCT, Sorter/FN, Duplex, Vendor, Fax1, Fax2

10.8.4 No Sleep

Functions	• To display the option of “OFF” for the sleep mode setting screen available from administrator setting.
Use	• To display the option of “OFF” for the sleep mode setting. **NOTE** • **The sleep mode will begin in 48 hours even if it sets it to “OFF.”**
Setting/ Procedure	• The default setting is “Prohibit.” Permit “Prohibit”

10.8.5 Original Size Detection

Functions	• To change the document size detection table.
Use	• Use to change the setting for the document size detection table. Copy Glass : To change the size detection table for the document glass.
Setting/ Procedure	<Copy Glass> • The default setting is “Table1.” “Table1” Table2 **NOTE** • **Table 2 can be set only when original size detection 2 sensor is being mounted.**

10.8.6 Foolscap Size Setting

Functions	• To set the size for foolscap paper.
Use	• Upon setup. • To change the size for foolscap paper.
Setting/ Procedure	• Select the size from among the following five. 220 x 330 mm $8^1/_2$ x 13 $8^1/_4$ x 13 $8^1/_8$ x $13^1/_4$ 8 x 13

10.8.7 Initialization

A. Data Clear

Functions	• To initialize the setting data.
Use	• To clears the setting data. For details on items to be cleared, see “Contents to be cleared by reset function.” See P.397 **NOTE** • **When removing or installing the hard disk after registering the data below, be sure to clear the data.** **Referring data: One-touch registration, user authentication/account track.**
Setting/ Procedure	*1.* Call the Service Mode on the screen. *2.* Select the key as follows. [System 1] → [Initialization] → [Data clear]. *3.* Press the Start key. *4.* When [OK] is displayed, turn off the main power switch and turn it on again more than 10 seconds after.

B. System Error Clear

Functions	• To reset the trouble data.
Use	• Use to clear the [Jam], [Trouble], [Error] displays, and other improper displays. For details on items to be cleared, see "Contents to be cleared by reset function." See P.397
Setting/Procedure	*1.* Call the Service Mode on the screen. *2.* Select the key as follows. [System 1] → [Initialization] → [System Error Clear]. *3.* Press the Start key. *4.* When [OK] is displayed, turn off the main power switch and turn it on again more than 10 seconds after.

10.8.8 Install Date

Functions	• To register the date the main unit was installed.
Use	• Upon setup.
Setting/Procedure	*1.* Call the Service Mode on the screen. *2.* Select the key as follows. [System 1] → [Install Date]. *3.* Enter the date (Year 4 digit → Month 2 digit → date 2 digit) from the 10-key pad. *4.* Touch [Entry] to set the date of installation.

10.8.9 Communication System Setting

Functions	• To select communication system used for RS-232C port.
Use	• To switch RS-232C port in order to connect with the CS remote care modem or the JScribe- enabled-device. • Communication requirements for each setting are shown below. **NOTE** • **If connecting the machine to the JScribe-enabled-device, the optional Expanded Memory (EM-309) needs to be mounted.**
Setting/Procedure	• The default setting is CS Remote Care. "CS Remote Care" JScribe1 JScribe2

	CS Remote Care	JScribe1	JScribe2
Baud rate	9,600 bps	19,200 bps	19,200 bps
Data bit	8 bit	7 bit	8 bit
Parity bit	None	Odd	None
Stop bit	1 bit	1 bit	1 bit

10.9 System 2

10.9.1 HDD

Functions	• Not used.
Use	
Setting/Procedure	

10.9.2 Image Controller Setting

Functions	• To set the type of the controller. • [Peripheral Mode] appears when [Others] is selected.
Use	• When setting up the controller.
Setting/ Procedure	Image Controller Setting • Select the controller to be used. "Controller 0" : The standard controller is used. Controller 1 : The optional image controller IC-406 is used. Controller 2 : undefined. Controller 3 : undefined. Others : undefined. Peripheral Mode • Select the operating mode of the Scanner. Mode 1: undefined. Mode 2: undefined. Mode 3: undefined. **NOTE** • **When the following setting is "ON", this setting should be set to "Controller 0".** **[Administrator Setting] → [Security Setting] → [Enhanced Security Mode]** **When [Enhanced Security Mode] is set to "ON", this setting cannot be changed.** • **After changing setting, make sure to turn off the main power switch and turn it on again more than 10 seconds after.** **Note on returning the setting from "Controller 1" to "Controller 0".** • Selecting "Controller 0" will initialize the following settings made while "Controller 1" was selected. Reset the following items as necessary when using the internal standard controller. <Control panel on the machine> • Setting items included in [Network Setting] available from [Administrator Setting]. (Except [Status Notification Setting] and [Prefix/Suffix Setting] available from the following setting. [Administrator Setting] → [Network Setting] → [Detail Setting].) • The following setting [Administrator Setting] → [User Authentication /Account Track] →[General Settings] → [External Server] • The following setting [Administrator Setting] → [System Connection] → [IS OpenAPI Setting] • Mailbox Destination (scan) • Information on the original specified by the Program Destination • [User Setting] → [Initial Setting] → [Scan] <Page Scope Web Connection> • SSL/TLS

10.9.3 Option Board Status

Functions	• To set when the optional fax mount kit, local interface kit is mounted.
Use	• Use when setting up the optional fax mount kit, local interface kit is mounted.
Setting/ Procedure	• Setting modes are Fax (Main), Fax (Sub), local I/F and JPEG. • The default settings are “Unset.” Fax (Main) : Set “Unset” Fax (Sub) : Set “Unset” local I/F : Set “Unset” JPEG : Set “Unset” **NOTE** • **When the setting has been changed, turn off the main power switch and turn it on again more than 10 seconds after.**

10.9.4 Consumable Life Reminder

Functions	• To select whether or not to give the display of PM parts lifetime PM parts lifetime display: An entire screen warning is given when the service life of a specific unit has been reached, prompting the user to replace the part. • Applicable units: Transfer belt unit, fusing unit, imaging unit (C, M, Y, K)
Use	• Use to select not to give the display of PM parts lifetime.
Setting/ Procedure	• The default setting is “Yes.” “Yes” No

10.9.5 Unit Change

Functions	• To select who is to replace a unit. • When the unit life arrives, the warning display is intended for the specific person who is going to replace the unit. When “User” is selected : Copying is inhibited. When “Service” is selected : Life warning.
Use	• Upon setup
Setting/ Procedure	• The following are the default settings: US, Japan, Others 4 Europe, Others1/2/3 Toner Cartridge : “User” Service “User” Service Imaging Unit : User “Service” “User” Service Waste Toner Box : User “Service” “User” Service Punch Dust Box : User “Service” “User” Service

10.9.6 Software Switch Setting

Functions	• Not used.
Use	
Setting/ Procedure	

10.9.7 Scan Caribration

Functions	• To set whether to use the calibration adjustment value set prior to the shipping.
Use	• To be used when CCD unit has bee changed. After replacing the CCD unit, the default value needs to be set since the calibration value set for each unit changes to control the differences in reading performance on each scanner (CCD).
Setting/ Procedure	• The default setting is ON. "ON" OFF **NOTE** • **When the setting is changed, the function becomes available by turning the sub power switch OFF and ON again.**

10.9.8 LCT Paper Size Setting

Functions	• To set the paper size for the LCT
Use	• Use to change the paper size for the LCT.
Setting/ Procedure	The default setting depends on the setting made for the applicable marketing area. A4 $8^1/_2$ x 11

10.9.9 Line Mag Setting

Functions	• To set whether to use the offset value which has been set prior to the shipping.
Use	• To be used after replacing the CCD unit. After replacing the CCD unit, the default value needs to be set since the magnification offset value between the lines set for each unit changes to control the differences in reading performance on each scanner (CCD).
Setting/ Procedure	• The default setting is ON. "ON" OFF **NOTE** • **When the setting is changed, the function becomes valid by turning the sub power switch OFF and ON again.**

10.9.10 Data Capture

Functions	• When an error occurs, it acquires the print job data in order to analyze the cause of the error.
Use	• When an error occurs, this will be used to analyze the cause of the error according to the print job data.
Setting/ Procedure	**NOTE** • **The following conditions are necessary for this function.** **When selecting [Security Setting] → [Security Details] → [Print Data Capture] in Administrator Setting, [Allow] must be set.** **The hard disk must be mounted to the machine.** **When selecting [Administrator Setting] → [Network Setting] → [FTP Setting], [FTP Server: ON] must be set.** • **This function is not available when using the optional image controller (IC-406).** *1.* Select [Service Mode] → [System 2], and touch [Data Capture]. Select [ON]. (While the Data Capture setting is [ON], the print job data from the PC will be stored in the hard disk.) *2.* Check the IP address of the machine. *3.* Connect the PC (Windows) and the machine with ethernet cable. *4.* Start the DOS command prompt of the PC, and specify the IP address of the machine to start FTP. 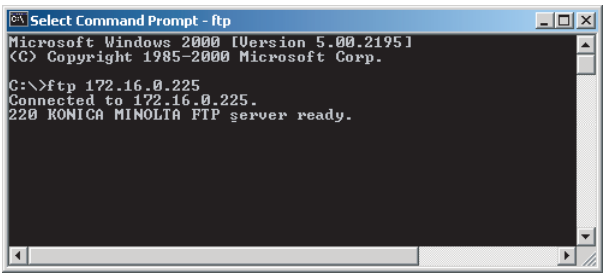 4037F3E538DA *5.* Input the user name and the password. User name: capture Password: sysadm 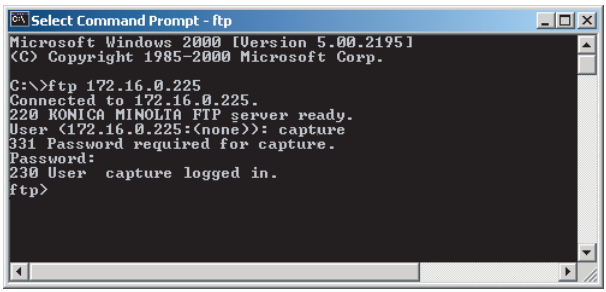 4037F3E539DA

Setting/ Procedure	*6.* Using the “ls” command, display the list of the file available for capture.

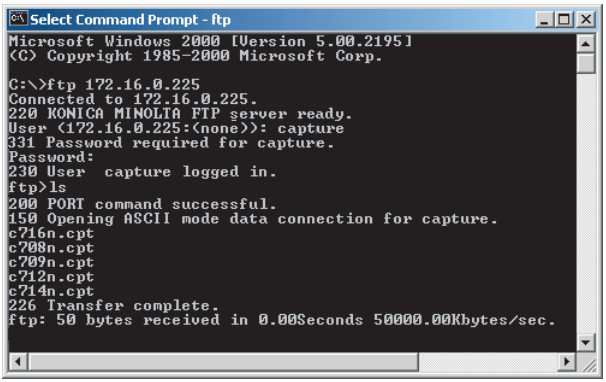

4037F3E540DA

7. Using the “binary” command, set the File transfer mode to the binary transfer.

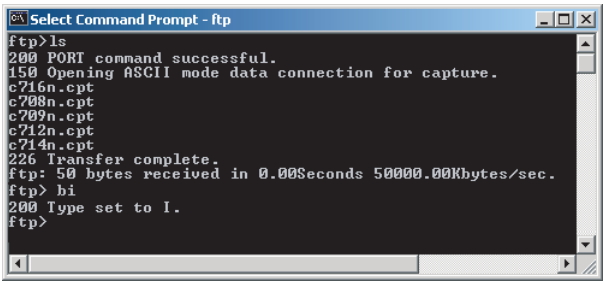

4037F3E541DA

Setting/ Procedure	*8.* Using the “get” command, transfer the data for capture to PC. 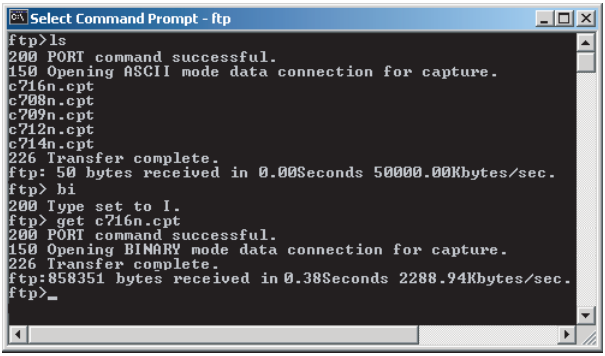 4037F3E542DA *9.* Finish the command prompt. **NOTE** • **When the data capture is set to [ON], all print job data will be stored in the hard disk.** • **After receiving capture data, select [Administrator Setting] → [Security Setting] → [Security Detail], and select [Restrict] for print data capture in order to delete the job data stored in the hard disk.**

10.9.11 Thin Line Detect. Setting

A. Prior Detection

Functions	• To set the detection level for the pre-detection of stain on the ADF original glass.
Use	• Use when changing the setting for whether or not to detect the stain on the ADF original glass when opening/closing ADF as well as its detection level as the main/sub power being ON, recovering from the sleep/low power mode, etc. Not Set : Detection of stain on the glass will not be conducted. Low : Stain on the glass will not be detected easily. Normal : Normal level detection. High : Stain on the glass will easily be detected. **NOTE** • **Be aware that selecting “Not Set” and performing the pre-detection with the following setting will display “NG.”** **[Service Mode] → [Machine] → [Thin Line Prior Detection]**
Setting/ Procedure	• The default setting is “Normal.” Not Set Low “Normal” High

B. Warning Level

Functions	• To set how to display the warning when stain on the ADF original glass is detected.
Use	• Use when changing the display of the warning which requests the cleaning of the stain on the glass detected by the pre-detection of the lines. 0: Warning will not be displayed. 1: Warning will be displayed by the maintenance mark. (warning code: D-1/D-2) 2: Warning will be displayed on the message area on the basic screen. 3: Warning will be displayed on all screens. **NOTE** • **This setting is invalid when [Prior Detection] is set to "Not Set."**
Setting/ Procedure	• The default setting is 2. 0 1 "2" 3

C. Detection during paper passing

Functions	• To set the operation for detection and removing operation of stain on the ADF original glass when feeding the original.
Use	• Use when changing the operation for detection and removing operation of stain on the ADF original glass when feeding the original. 0 : The glass will stop moving when the original is fed, and will not perform removing the stain. 1 : The glass will move between originals when feeding the original. 2 : When the original is fed, the glass will move while reading the original in order to remove the stain, and reduce the lines. 3 to 6 : When the original is fed, the glass will move while reading the original in order to remove the stain. The lines will be reduced also by the image process control. The level 3, 4, 5, and 6 of the image process are set in this order with 3 being the most efficient in reducing the lines. • When setting to "0" or "1", the setting area available for the administrator by the following setting will be restricted to "0 (Disable)" or "1 (Enable)." [Administrator Setting] → [System Setting] → [Expert Adjustment] → [Pre-Detection of Lines] → [Detect & Remove During Job]
Setting/ Procedure	• The default setting is 1. 0 to 6

10.9.12 Stamp

Functions	• To set the mounting status of the optional stamp unit SP-501.
Use	• To use when setting up the stamp unit SP-501.
Setting/ Procedure	• The default setting is Unset. Set "Unset"

10.9.13 Network Fax Settings

Functions	• To set whether or not to use network fax function.
Use	• To use network fax function (IP address fax, internet fax). • Selection will be available when each network fax function is set to “ON” in the following settings. [Administrator Setting] → [Network Setting] → [Network Fax Setting] → [Network Fax Function Settings]
Setting/ Procedure	• The default settings are OFF. IP Address Fax : ON “OFF” SIP-Fax : Not Used Internet Fax : ON “OFF”

10.10 Counter

- The counter displays the counts of various counters to allow the technical representative to check or set as necessary.

10.10.1 Procedure

1. Touch [Counter] to show the counter menu.
2. Select the specific counter to be displayed.
3. To clear the counts of two or more counters within a group or across different groups at once, touch [Counter Reset], select the specific counters to be cleared, and touch [END]. Two or more counters can be selected.

10.10.2 Life

Functions	• To check the number of hours or times each of the different maintenance parts has been used. • To clear the count of each counter.
Use	• When each of the maintenance parts is replaced.
Setting/ Procedure	• To clear the count of a counter, select the specific part and press the Clear key. • If a counter is cleared mistakenly, press the Interrupt key, which will undo the clearing operation. • It is not possible to clear the count of the counters for the fusing unit, transfer belt unit, and IU, which are provided with a new unit detection function. <1> • Fusing Unit : Number of times a sheet of paper is fed through • Transfer Unit : Number of times a sheet of paper is fed through • 1st. : Number of sheets of paper fed from tray 1 • 2nd. : Number of sheets of paper fed from tray 2 • 3rd. : Number of sheets of paper fed from tray 3 • 4th. : Number of sheets of paper fed from tray 4 • Manual Tray : Number of sheets of paper fed from the bypass
	<2> • Cyan IU : Period of time over which the cyan imaging unit has been used. • Magenta IU : Period of time over which the magenta imaging unit has been used. • Yellow IU : Period of time over which the yellow imaging unit has been used. • Black IU : Period of time over which the black imaging unit has been used. • LCT Parts : Number of sheets of paper fed from the LCT • ADF Feed : Number of sheets of paper fed through the take-up section of the ADF • ADF Reverse : Number of sheets of paper fed through the turnover unit of the ADF • Sorter/Finisher: Number of sheets of paper fed out of the sorter/finisher

10.10.3 Jam

Functions	• To check the number of misfeeds that have occurred at different locations in the machine. • To clear the count of each counter.
Use	• To check the number of paper misfeeds that have occurred
Setting/ Procedure	• To clear the count of a counter, select the specific part and press the Clear key. • If a counter is cleared mistakenly, press the Interrupt key, which will undo the clearing operation.

10.10.4 Service Call Counter

Functions	• To check the number of malfunctions that have occurred at different locations in the machine • To clear the count of each counter.
Use	• To check the number of malfunctions that have occurred
Setting/ Procedure	• To clear the count of a counter, select the specific part and press the Clear key. • If a counter is cleared mistakenly, press the Interrupt key, which will undo the clearing operation.

10.10.5 Warning

Functions	• To check the number of warning conditions detected according to the warming type • To clear the count of each counter.
Use	• To check the number of warning conditions that have been detected
Setting/ Procedure	• To clear the count of a counter, select the specific part and press the Clear key. • If a counter is cleared mistakenly, press the Interrupt key, which will undo the clearing operation. • When a warning condition occurs, an oil mark appears at the lower left corner of the basic screen. • Touching the oil mark will display the warning code screen.

10.10.6 Maintenance

Functions	• To set a count value for maintenance of any given part.
Use	• When any given part is replaced.
Setting/ Procedure	Maint.-Set • Enter the maintenance counter value from the 10-key pad. Maint.-Count • Counts up when a sheet of paper is fed through the machine. • Pressing the Clear key will clear the count. • If the count is cleared mistakenly, press the Interrupt key, which will undo the clearing operation.

10.10.7 Service Total

A. Total

Functions	• To display the count value for the service total counter.
Use	• Use to check the total No. of printed pages including the ones printed by the Service Mode.
Setting/ Procedure	Service Total : No. of pages printed by user mode and Service Mode. Service Total (Duplex) : No. of pages printed by user mode and Service Mode in duplex.

B. Paper Size

Functions	• To display the count value for service total counter of each paper size.
Use	• To check the total number of printed pages including the one at Service Mode according to each paper size.

10.10.8 Counter of Each Mode

Functions	• To display the printed pages in the following specified modes; copy, printer, scanner, and fax. It also displays the count value of using the specified mode.
Use	• Use to check the printed pages in the following specified modes; copy, printer, scanner, and fax, as well as No. of times each mode was used, in order to know the using condition.

10.10.9 Service Call History (Data)

Functions	• To display the trouble history in chronological order.
Use	• Use to check the trouble history in chronological order.

10.10.10 ADF Paper Pages

Functions	• To display the No. of pages fed to the automatic document feeder.
Use	• Use to check the No. of pages fed to the automatic document feeder.

10.10.11 Paper Jam History

Functions	• To display the jam history in chronological order.
Use	• Use to check the jam history in chronological order. **NOTE** • **[Code] displayed on the screen of JAM history indicates JAM code. For details of JAM code, see "Trouble shooting" on page 319.**

10.10.12 Fax Connection Error

Functions	• To display the No. of fax transmission errors occurred.
Use	• Use to check the No. of fax transmission errors occurred.

10.10.13 Thin Line Counter

Functions	• To display the average number of detected stain on the ADF original glass at the pre-detection or detection during the paper feed. Pre-detect Large Size : Large-sized detected stain divided by the number of times pre-detection is practiced (average number of detected lines) will be displayed. Pre-detect Small Size : Small-sized detected stain divided by the number of times pre-detection is practiced (average number of detected lines) will be displayed. Detect Thin line in acting : Number of detected stain on the original glass during the original feed divided by the number of scanning by ADF (average number of detected lines) will be displayed.
Use	• Used for checking the number of detected stain on the ADF original glass.
Setting/ Procedure	• To clear each counter value, select the items to be cleared, and press the Clear key. (When selecting [Pre-detect Large Size] or [Pre-detect Small Size] is selected, both values will be cleared.) • If the count is cleared mistakenly, press the Interrupt key, which will undo the clearing operation.

10.11 List Output

10.11.1 Machine Management List

Functions	• To produce an output of a list of setting values, adjustment values, total counter values, and others.
Use	• At the end of setup or when a malfunction occurs.
Setting/ Procedure	• Load the A4S plain paper to a paper source. • Press the Start key, which will let the machine produce the list. • The time-of-day and date will also be printed.

10.11.2 Adjustment List

Functions	• To output the adjustment list for machine adjustment, process adjustment, etc. in Service Mode.
Use	• At the end of setup or when a malfunction occurs.
Setting/ Procedure	• Load the A4S plain paper to a paper source. • Press the Start key, which will let the machine produce the list. • The time-of-day and date will also be printed.

10.11.3 Parameter List

For details, see FK-502 Service Manual.

10.11.4 Service Parameter

For details, see FK-502 Service Manual.

10.11.5 Protocol Trace

For details, see FK-502 Service Manual.

10.11.6 Fax Setting List

For details, see FK-502 Service Manual.

10.12 State Confirmation

10.12.1 Sensor Check

Functions	• To display the states of the input ports of sensors and switches when the machine remains stationary.
Use	• Used for troubleshooting when a malfunction or a misfeed occurs.
Setting/ Procedure	• The operation of each of the switches and sensors can be checked on a real-time basis. • It can be checked as long as the 5-V power line remains intact even when a door is open.

A. Electrical components check procedure through input data check

- When a paper misfeed occurs in the paper feed section of the machine, the tray 2 paper take-up sensor is considered to be responsible for it.

1. Remove the sheet of paper misfed.
2. From the sensor check list that follows, check the panel display of the tray 2 paper take-up sensor. For the tray 2 paper take-up sensor, you check the data of “Take-Up” of “Tray 2.”
3. Call the Service Mode to the screen.
4. Select [State Confirmation] → [Sensor Check] and then select the screen that contains “Take-Up” under “Tray 2.” For “Take-Up” under “Tray 2,” select “1” on the left-hand side of the screen.
5. Check that the data for “Take-Up” under “Tray 2” is “0” (sensor blocked).
6. Move the actuator to unblock the tray 2 paper take-up sensor.
7. Check that the data for “Take-Up” under “Tray 2” changes from “0” to “1” on the screen.
8. If the input data is “0,” change the sensor.

B. Sensor check screens

- These are only typical screens which may be different from what are shown on each individual machine.

```
Sensor Check                                                    END
1  Sensors 1
2   Tray1                    Upper Limit      0   Near Empty       0  Paper Passage
     Device Detection       0 Tray3                Vertical Transport 0   Registration Roller   0
3    Paper Empty            0   Device Detection 0  Take-Up          0  Exit                  0
     Near Empty             0   Paper Empty      0  Upper Limit      0  OHP Detect            0
4    Chain Feed             0   Near Empty       0 Manual(Bypass)       Fusing Loop Detect    0
   Tray2                        Vertical Transport 0  Multi FD Size1 0 PC Drive Detect
5    Device Detection       0   Take-Up          0  Multi FD Size2 0   Color PC Drive Main Sensor 0
     Paper Empty            0   Upper Limit      0  Multi FD Size3 0   Color PC Drive Sub Sensor  0
     Near Empty             0 Tray 4                Lift-Up Position Sensor 0  Black PC Drive Main Sensor 0
     Vertical Transport     0   Device Detection 0  Paper Empty      0  Black PC Drive Sub Sensor  0
     Take-Up                0   Paper Empty      0
```

```
Sensor Check                                                    END
1  Sensors 2
2   LCT                      Manual Button Down 0  Paper Detect Reverse Sensor 0 2nd Transfer
     Lift-Up Upper          0 Division Board Position 0                           Retraction   0
3    Lift-Up Lower          0 Cassette Open  0                                   Transfer Belt
     Shift Tray Home        0 Shift Motor Pulse 0                                 Retraction   0
4    Shift Tray Stop        0 Elevator Motor Pulse 0                             Waste Toner
     Take-Up                0 Duplex                                              Toner Full   0
5    Vertical Transport     0   Set              0                               Fusing Unit
     Paper Empty            0   Paper Passage1   0                                Fusing Roller Retraction 0
     Main Tray Empty        0   Paper Passage2   0
     Shift Tray Empty       0 Horizontal Trans. Unit
     Lower Over Run         0   Horizontal Transport 0
```

```
Sensor Check                                                    END
1  Sensors 3    / Built-In Finisher1
2   Carrying Paper Passage 0 Elevate Tray Proliferation 0  Punch Position2 0
    Middle Paper Passage   0   Elevate Position       0  Punch Dust Full 0
3   Home1(CD-Align)        0 Home(Shutter)            0  Remain in Reverse Section 0
    Home2(CD-Align)        0 Home (Exit Paddle)       0  Stapler Save Position    0
4   Elevate Tray Raised/Lowered 0 Home(Exit R)        0  Fan Motor Lock            0
    Shutter                0 Empty(Finisher)          0  Exit OP Machine Set      0
5   Front Cover            0 Home(Staple CD)          0
    Punch Pulse            0 Self Priming             0
    Home(Saddle In and Out) 0 Staple Empty            0
    Elevate Tray Lowered   0 Home(Stapler)            0
    Surface(Elev.)         0 Punch Position1          0
```

```
Sensor Check                                                    END
1  Sensors 4    / Built-In Finisher2
2   Saddle Exit            0   Self Priming     0  Bin2
    Folding R Home         0 Saddle             0   Empty        0
3   Middle Guide           0 Saddle Empty       0   Full         0
    Saddle Guide           0 Home (Saddle Exit) 0  Bin3
4   Saddle Stapler1          Bin                     Empty        0
     Home                  0   Paper Passage1   0   Full         0
     Staple Empty          0   Paper Passage2   0  Bin4
5    Self Priming          0   Door (Jam)       0   Empty        0
    Saddle Stapler2          Bin1                    Full         0
     Home                  0   Empty            0
     Staple Empty          0   Full             0
```

```
Sensor Check                                                    END
1  Sensors 5
2   Scanner                  Original Size Detection 1 0
     Home Sensor            0 Original Size Detection 2 0
3   Org. Detecting Sensor      Original Size Detection 3 0
     Original Cover         0 Original Size Detection 4 0
4    20 Degree              0 Original Size Detection 5 0
     Original Size Detection 6 0
5    Original Size Detection 7 0
     Original Size Detection 8 0
```

9J06F3E504DA

C. Sensor check list

(1) Sensors 1 (Main unit, PC-103, PC-203)

Symbol	Panel display		Part/signal name	Operation characteristics/ panel display	
				1	0
PC12-PC	Tray 1	Device Detection	Tray 1 device detection sensor	In position	Out of position
PC10-PC		Paper Empty	Tray 1 paper empty sensor	Paper not present	Paper present
PC11-PC		Near Empty	Tray 1 near empty sensor	Blocked	Unblocked
MFDTB		Chain Feed	Tray 1 chain feed sensor	Paper present	Paper not present
PC2-PC	Tray 2	Device Detection	Tray 2 device detection sensor	In position	Out of position
PC6-PC		Paper Empty	Tray 2 paper empty sensor	Paper not present	Paper present
PC1-PC		Near Empty	Tray 2 near empty sensor	Blocked	Unblocked
PC8-PC		Vertical Transport	Tray 2 vertical transport sensor	Paper present	Paper not present
PC9-PC		Take-Up	Tray 2 take-up sensor	Paper present	Paper not present
PC7-PC		Upper Limit	Tray 2 lift-up sensor	At raised position	Not at raised position
PC112-PC	Tray 3	Device Detection	Tray 3 set sensor	In position	Out of position
PC115-PC		Paper Empty	Tray 3 paper empty sensor	Paper not present	Paper present
PC113-PC		Near Empty	Tray 3 paper near empty sensor	Blocked	Unblocked
PC117-PC		Vertical Transport	Tray 3 vertical transport sensor	Paper present	Paper not present
PC116-PC		Take-Up	Tray 3 paper take-up sensor	Paper present	Paper not present
PC114-PC		Upper Limit	Tray 3 lift-up upper limit sensor	At raised position	Not at raised position
PC121-PC	Tray 4	Device Detection	Tray 4 set sensor	In position	Out of position
PC124-PC		Paper Empty	Tray 4 paper empty sensor	Paper not present	Paper present
PC122-PC		Near Empty	Tray 4 paper near empty sensor	Blocked	Unblocked
PC126-PC		Vertical Transport	Tray 4 vertical transport sensor	Paper present	Paper not present
PC125-PC		Take-Up	Tray 4 paper take-up sensor	Paper present	Paper not present
PC123-PC		Upper Limit	Tray 4 lift-up sensor	At raised position	Not at raised position

Symbol	Panel display		Part/signal name	Operation characteristics/ panel display	
				1	0
PC19	Manual (Bypass)	Multi FD Size1	Manual (bypass) multi FD size1 sensor	ON	OFF
PC20		Multi FD Size2	Manual (bypass) multi FD size2 sensor	ON	OFF
PC21		Multi FD Size3	Manual (bypass) multi FD size3 sensor	ON	OFF
PC14		Lift-Up Position Sensor	Manual (bypass) lift-up position sensor	At raised position	Not at raised position
PC13		Paper Empty	Manual (bypass) paper empty sensor	Paper not present	Paper present
PC1	Paper Pas-sage	Registration Roller	Registration roller sensor	Paper present	Paper not present
PC2		Exit	Exit sensor	Paper present	Paper not present
PC4		OHP Detect	OHP detect sensor	OHP	Not OHP
PC3		Fusing Loop Detect	Fusing loop detect sensor	Loop present	Loop not present
PC15	PC Drive Detect	Color PC Drive Main Sensor	Color PC drum main sensor	Blocked	Unblocked
PC17		Color PC Drive Sub Sensor	Color PC drum sub sensor	Blocked	Unblocked
PC16		Black PC Drive Main Sensor	Black PC drum main sensor	Blocked	Unblocked
PC18		Black PC Drive Sub Sensor	Black PC drum sub sensor	Blocked	Unblocked

D. Sensors 2 (Main unit, PC-403)

Symbol	Panel display		Part/signal name	Operation characteristics/ panel display	
				1	0
PC4-LCT	LCT	Lift-Up Upper	Lift-up upper sensor	At raised position	Not at raised position
PC13-LCT		Lift-Up Lower	Lift-up lower sensor	At lower limit	Not at lower limit
PC12-LCT		Shift Tray Home	Shift tray home sensor	At home	Out of home
PC11-LCT		Shift Tray Stop	Shift tray stop sensor	At stop position	Not at stop position
PC1-LCT		Take-Up	Paper take-up sensor	Paper present	Paper not present
PC2-LCT		Vertical Transport	Vertical transport sensor	Paper present	Paper not present
PC3-LCT		Paper Empty	Paper empty board	Paper present	Paper not present
PWB-E LCT		Main Tray Empty	Main tray empty sensor board	Paper present	Paper not present
PC9-LCT		Shift Tray Empty	Shift tray empty sensor	Paper present	Paper not present
PC7-LCT		Lower Over Run	Lower over run sensor	Malfunction	Operational
NU1-LCT		Manual Button Down	Manual button down board	ON	OFF
PC14-LCT		Division Board Position	Division board motor	At home	Out of home
PC6-LCT		Cassette Open	Cassette open sensor	In position	Out of position
PC8-LCT		Shift Motor Pulse	Shift motor pulse sensor	Blocked	Unblocked
PC10-LCT		Elevator Motor Pulse	Elevator motor pulse sensor	Blocked	Unblocked
PCI DU	Duplex	Set	Duplex unit door set sensor	Close	Open
PI1 DU		Paper Passage1	Duplex unit transport sensor 1	Paper present	Paper not present
PC2 DU		Paper Passage2	Duplex unit transport sensor 2	Paper present	Paper not present
—	Horizon-tal Trans. Unit	—	Not used.	—	—
—		—	Not used.	—	—
PC7	2nd Transfer	Retraction	2nd transfer retraction sensor	Not Retracted	Retracted
PC6	Transfer Belt	Retraction	Transfer belt retraction sensor	Not Retracted	Retracted
PC8	Waste Toner	Toner Full	Waste toner full sensor	Blocked	Unblocked
PC23	Fusing Unit	Fusing Roller Retraction	Fusing roller retraction sensor	Not Retracted	Retracted

E. Sensors 3 (FS-514)

Symbol	Panel display		Part/signal name	Operation characteristics/ Panel display	
				1	0
PC1	Built-In Finisher 1	Carrying Paper Passage	Entrance sensor	Paper present	Paper not present
PC2		Middle Paper Passage	Transport sensor	Paper present	Paper not present
PC7		Home1 (CD-Align)	Alignment home position sensor /1	At home	Not at home
PC8		Home2 (CD-Align)	Alignment home position sensor /2	At home	Not at home
S3		Elevate Tray Raised/ Lowered	Elevator tray switch	ON	OFF
S2		Shutter	Shutter detect switch	Closed	Open
S1		Front Cover	Front door switch	Closed	Open
PC700		Punch Pulse	Punch motor pulse sensor	Blocked	Unblocked
PC23-SK		Home (Saddle In and Out)	In & out guide home sensor	Blocked	Unblocked
PC13		Elevate Tray Lowered	Elevator tray lower limit sensor	Blocked	Unblocked
PC12		Surface (Elev.)	Elevator top face detection sensor	Blocked	Unblocked
-		Elevate Tray Proliferation	Short connector	Set	Not set
PC11		Elevate Position	Elevator tray home position sensor	Blocked	Unblocked
PC14		Home (Shutter)	Shutter home position sensor	Blocked	Unblocked
PC6		Home (Exit Paddle)	Exit paddle home position sensor	Blocked	Unblocked
PC5		Home (Exit R)	Exit roller home position sensor	Blocked	Unblocked
PC3		Empty (Finisher)	Storage tray detect sensor	Blocked	Unblocked
PC9		Home (Staple CD)	Staple home position sensor	Blocked	Unblocked
-		Self Printing	Self-priming sensor	Blocked	Unblocked
-		Staple Empty	Staple empty detection sensor	Blocked	Unblocked
-		Home (Stapler)	Staple home position sensor	Blocked	Unblocked
PC500		Punch Position1	Punch cam sensor	Unblocked	Blocked
PC600		Punch Position2	Punch home position sensor	Unblocked	Blocked
PC30		Punch Dust Full	Punch Trash full sensor	Blocked	Unblocked
PC4		Remain in Reverse Section	Entrance switch back sensor	Unblocked	Blocked
PC10		Stapler Save Position	Stapler save position sensor	Blocked	Unblocked
M9		Fan Motor Lock	Cooling fan motor	When turning	When stopped
S4		Exit OP Machine Set	Slide switch	Set	Not set

F. Sensors 4 (SD-503, MT-501)

Symbol	Panel display		Part/Signal name	Operation characteristics/Panel display	
				1	0
PC20-SK	Built-In Finisher 2	Saddle exit	Saddle exit sensor	Paper present	Paper not present
PC22-SK		Folding R home	Crease roller home position sensor	Paper present	Paper not present
S5		Middle guide	Middle guide switch	Open	Closed
PC24-SK		Saddle guide	Layable guide home sensor	Blocked	Unblocked
—		Saddle stapler 1			
—		Home	Staple Home Position Sensor 1	Blocked	Unblocked
—		Staple empty	Staple Empty Detection Sensor 1	Blocked	Unblocked
—		Self priming	Self-Priming Sensor 1	Blocked	Unblocked
—		Saddle stapler 2			
—		Home	Staple Home Position Sensor 2	Blocked	Unblocked
—		Staple empty	Staple Empty Detection Sensor 2	Blocked	Unblocked
—		Self priming	Self-Priming Sensor 2	Blocked	Unblocked
S4-SK		Saddle	Saddle interlock switch	Open	Closed
PC21-SK		Saddle empty	Saddle tray empty sensor	Paper present	Paper not present
PC18-SK		Home (Saddle exit)	Saddle exit roller home position sensor	Paper present	Paper not present
PC10-MK	Bin	Paper Passage 1	Lower transport sensor	Paper present	Paper not present
PC9-MK		Paper Passage 2	Upper transport sensor	Paper present	Paper not present
PC11-MK		Door (Jam)	Cover open/close sensor	Open	Close
PC1-MK	Bin 1	Empty	Paper detection sensor 1	Paper not present	Paper present
PC5-MK		Full	Paper full detection sensor 1	Blocked	Unblocked
PC2-MK	Bin 2	Empty	Paper detection sensor 2	Paper not present	Paper present
PC6-MK		Full	Paper full detection sensor 2	Blocked	Unblocked
PC3-MK	Bin 3	Empty	Paper detection sensor 3	Paper not present	Paper present
PC7-MK		Full	Paper full detection sensor 3	Blocked	Unblocked
PC4-MK	Bin 4	Empty	Paper detection sensor 4	Paper not present	Paper present
PC8-MK		Full	Paper full detection sensor 4	Blocked	Unblocked

G. Sensors 5 (Main unit)

Symbol	Panel display		Part/signal name	Operation characteristics/ panel display	
				1	0
PC201	Scanner	Home Sensor	Scanner home sensor	At home	Out of home
S201	Org. Detecting Sensor	Original Cover	Original cover/DF open sensor	Lowered	Raised
PC202		20 Degree	20 degree sensor	Less than 20°	20° or more
PC203		Original Size Detection 1	Original size detection 1 sensor	Original loaded, not mounted	Original not loaded
PC204		Original Size Detection 2	Original size detection 2 sensor	Original loaded, not mounted	Original not loaded
—		Original Size Detection 3	Not used	—	—
—		Original Size Detection 4	Not used	—	—
—		Original Size Detection 5	Not used	—	—
—		Original Size Detection 6	Not used	—	—
—		Original Size Detection 7	Not used	—	—
—		Original Size Detection 8	Not used	—	—

10.12.2 Table Number

Functions	• To display the Vg/Vdc output values calculated for the image density of the test pattern (amount of toner sticking) produced on the Transfer Belt during an AIDC detection sequence. • Reference values: C, M, Y K Vdc: around 400 V, Vg: around 500 V
Use	• Used for troubleshooting of image problems.
Setting/ Procedure	• If the value is high, correct so that the image density becomes low. • If the value is low, correct so that the image density becomes high.

10.12.3 Level History1

Functions	• To display TCR (T/C ratio), IDC/registration sensor output values, and fusing temperature.
Use	• Used for troubleshooting of image problems.
Setting/ Procedure	• TCR-C/-M/-Y/-K: Shows the T/C output reading taken last. • IDC1/IDC2 : Shows the latest IDC data. • Temp-Heat : Shows the latest heating roller temperature data. • Temp-Press. : Shows the latest fusing pressure roller temperature data. “Reading taken last” means • Density of toner of the latest image • When a test print is produced by pressing the Start key while level history 1 is being displayed.

10.12.4 Level History2

Functions	• IDC Sensor (Transfer belt bare surface level) as adjusted through the image stabilization sequence and ATVC value.
Use	• Used for troubleshooting of image problems.
Setting/ Procedure	• IDC Sensor: Shows the intensity adjustment value (0 to 255) of the IDC sensor. • ATVC (C, M, Y, K): Shows the first image transfer ATVC adjustment value (-500 V to 3000 V). • ATVC (2nd) : Shows the second image transfer ATVC adjustment value (1000 V to 4800 V).

10.12.5 Temp. & Humidity

Functions	• To display the temperature and humidity of a specific location (AIDC sensor portion) inside the machine and fusing temperature.
Use	• Used as reference information when a malfunction occurs.
Setting/ Procedure	• Temp-Inside : 0 to 100 °C in 1 °C increments • Temp-Heater : 0 to 255 °C in 1 °C increments • Temp-press. : 0 to 255 °C in 1 °C increments • Humidity : 0 to 100 % in 1 % increments • Absolute Humidity : 0 to 100 in 1 increments

10.12.6 CCD Check

Functions	• To display the D/A value of CCD clamp/gain for R, G, and B.
Use	• Used for troubleshooting for the CCD sensor.
Setting/ Procedure	• Use the following guidelines on the correct range of values. CLAMP: The difference between the max. and min. output values should be within ±100. GAIN : The difference from the CLAMP values (R, B) should be within (90 for R and B. The difference from the CLAMP value (G) should be within ±50 for G. The difference between each pair of RO and RE, GO and GE, and BO and BE should be within 30.

10.12.7 Memory/HDD Adj.

A. Memory Check

Functions	• To check correspondence of data written to and that read from memory through write/read check. Rough Check • A check is made to see if the image data reading and writing are correctly made in a very limited area. • The progress of the check sequence is displayed in percentage. Detail Check • A check is made to see if the image data reading and writing are correctly made at the addresses and buses in all areas. • The progress of the check sequence is displayed in percentage.
Use	• If the copy image is faulty.
Adjustment Procedure	*1.* Call the Service Mode to the screen. *2.* Touch these keys in this order: [State Confirmation] → [Memory / HDD Adj.] → [Memory Check]. *3.* Select the desired type of check, either [Rough Check] or [Detail Check]. *4.* Press the Start key to start the check procedure. *5.* When the check procedure is completed, the results are shown on the screen. If the check results are NG, check the memory for connection or replace the memory with a new one. ✻ Press the Stop key to interrupt the check sequence.

B. Compress / Decompression Check

Functions	• To check whether compression and decompression are carried out properly.
Use	• If the copy image is faulty.
Adjustment Procedure	*1.* Call the Service Mode to the screen. *2.* Touch these keys in this order: [State Confirmation] → [Memory / HDD Adj.] → [Compress / Decompression Check]. *3.* Pressing the Start key will automatically start to complete a compression/decompression check sequence. *4.* The check result will be displayed,

C. Memory Bus Check

Functions	• To check to see if image data is correctly transferred from scanner to memory, and from memory to printer.
Use	• If the copy image is faulty.
Adjustment Procedure	*1.* Call the Service Mode to the screen. *2.* Touch these keys in this order: [State Confirmation] → [Memory / HDD Adj.] → [Memory Bus Check]. *3.* Select either [Scanner → Memory], [Memory → PRT], or both. *4.* Pressing the Start key will start the memory bus check and be terminated automatically. *5.* The check result will be displayed, [OK] or [NG].

D. Work Memory In/Out Check

Functions	• To check to see if input and output of image data of work memory are correctly performed.
Use	• If the print image is faulty.
Adjustment Procedure	*1.* Call the Service Mode to the screen. *2.* Touch these keys in this order: [State Confirmation] → [Memory / HDD Adj.] → [Work Memory In/Out Check]. *3.* Select either [Input Check], [Output Check], or both. *4.* Pressing the Start key will start the work memory input/output operation check sequence and be terminated automatically. *5.* The check result will be displayed, [OK] or [NG].

E. HDD Version Up

Functions	• To upgrade administration data (Document management information, address information, etc.) other than image data in HDD.
Use	
Adjustment Procedure	*1.* Open the Service Mode. *2.* Set the following setting. [State Confirmation] → [Memory/HDD Adj.] → [HDD Version Up] *3.* Touch the Start key to start upgrading the version. *4.* When upgrading the version is complete, the outcome will be displayed on the screen. **NOTE** • **Make sure to turn main power switch OFF when upgrading is complete, and wait for ten seconds to turn back ON.**

F. HDD R/W Check

Functions	• To check to see if the hard disk is connected properly, and if read/write operation of the hard disk is correctly performed.
Use	• When the hard disk is mounted.
Adjustment Procedure	*1.* Call the Service Mode to the screen. *2.* Touch these keys in this order: [State Confirmation] → [Memory / HDD Adj.] → [HDD R/W Check]. *3.* Pressing the Start key will start the hard disk R/W check sequence and be terminated automatically. *4.* The check result will be displayed, [OK] or [NG].

G. HDD Format

Functions	• To format the hard disk • The function proceeds in the order of physical format to logical format. • If the hard disk is yet to be formatted, the malfunction code “C-D010” will appear. Ignore this code and continue with the formatting procedure.
Use	• When the hard disk is mounted. • When the hard disk is to be initialized. (Physical format to logical format)
Adjustment Procedure	*1.* Call the Service Mode to the screen. *2.* Touch these keys in this order: [State Confirmation] → [Memory / HDD Adj.] → [HDD Format]. **(1) Physical Format** *1.* Touch [Physical Format]. *2.* Press the Start key to start the formatting sequence. *3.* The sequence will be automatically terminated as it is completed. *4.* Turn off the main power switch and turn it on again more than 10 seconds after. **(2) Logical Format (only when initial is set up)** *1.* Touch [Logical Format]. *2.* Press the Start key to start the formatting sequence. *3.* The sequence will be automatically terminated as it is completed. *4.* Turn off the main power switch and turn it on again more than 10 seconds after. ✻ Formatting the hard disk will erase all data contained in it.

⚠ H. HDD Version Down

Functions	• Not used.
Use	
Adjustment Procedure	

10.12.8 Memory/HDD State

Functions	• To display the condition and amount of the memory and hard disk. • To display the mounting condition of the optional encryption board (security kit SC-503).
Use	• Use to check the condition and amount of the memory and hard disk. • Use to setup the optional security kit SC-503.
Setting/ Procedure	• When an add-on memory is mounted, the machine automatically recognizes it and displays its capacity. • When the encryption board is mounted, the machine automatically recognizes it and displays [Set].

10.12.9 Color Regist

Functions	• To check each of C, M, Y, and K for color shift amount. • The data is updated after a color shift correction has been made or color shift adjustment has been completed.
Use	• Use for check when color shift is evident. • Use for adjustment of PH skew.
Setting/ Procedure	• For each of C, M, Y, and K, the color shift amount (in X and Y directions) at two locations (one at the front and the other in the rear) and the difference in color shift amount between the front and rear (X and Y directions) are displayed. • Display unit: dots • The shift amount is displayed with reference to K for C, M, and Y, and that for K is displayed with reference to an ideal position.

10.12.10 IU Lot No.

Functions	• To display the 10-digit lot number for each of C, M, Y, and K IUs. • The lot number data is stored in EEPROM of each IU.
Use	• Use for checking the IU Lot No.
Setting/ Procedure	• The IU lot number is displayed even with the front door opened; however, the display is blank, since the machine is unable to read the lot number when the main power switch is turned ON with the front door open. Nonetheless, the lot number will be displayed when the front door is closed. (The engine obtains the IU lot number information when the front door is closed.)

10.12.11 Adjustment Data List

Functions	• To display the adjustment and setting value set in the main unit.
Use	• Use to check the adjustment and setting value set in the main unit.

10.13 Test Mode

- To check the image on the printer side by letting the machine produce various types of test pattern. It also tests the printing operation in running mode, as well as the fax transmission.
- The machine searches through the paper sources in the order of tray 2, tray 3, tray 4, and tray 1 for paper of the maximum size for printing.

10.13.1 Procedure for test pattern output

1. Touch [Test Mode] to display the test mode menu.
2. Touch the desired test pattern key.
3. Set up the desired functions and press the Start key.

10.13.2 Gradation Pattern

Functions	• To produce a gradation pattern.
Use	• Used for checking gradation reproducibility.
Pattern	SINGLE HYPER Gradation Cyan
Setting/ Procedure	• # of Print (“1” to 999) • Select “SINGLE” (single copy) or MULTI (multi copy). • Select FEET or “HYPER”. • Select “Gradation” or Resolution if HYPER has been selected. • Select the color mode. “Cyan”, Magenta, Yellow, Black (4PC), CMYK, 8Color, 4Color, Black (1PC) • Black (4PC): Uses four colors. • Black (1PC): Uses one color of black.

10.13.3 Halftone Pattern

Functions	• To produce a solid halftone pattern.
Use	• Used for checking uneven density and pitch noise.
Pattern	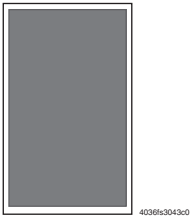 SINGLE HYPER Gradation Cyan Density: 255
Setting/ Procedure	• # of Print (“1” to 999) • Select “SINGLE” (single copy) or MULTI (multi copy). • Select FEET or “HYPER.” • Select “Gradation” or Resolution if HYPER has been selected. • Select the color mode. “Cyan”, Magenta, Yellow, Black (4PC), Red, Green, Blue, CMYK, 3 Color, 4 Color, Black (1PC), MIX • Type the density level (0 to “255”).

10.13.4 Lattice Pattern

Functions	• To produce a lattice pattern.
Use	• Used for checking fine line reproducibility and uneven density. • A reverse pattern is also used to check for fine line reproducibility of white letters on a solid background.
Pattern	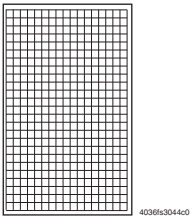 SINGLE FEET Cyan CD Width: 5 FD Width: 5 Density: 255 Normal
Setting/ Procedure	• # of Print (“1” to 999) • Select “SINGLE” (single copy) or MULTI (multi copy). • Select “FEET” or HYPER. • Select Gradation or Resolution. (Only select HYPER) • Select the color mode. “Cyan”, Magenta, Yellow, Black (4PC), Red, Green, Blue, CMYK, 3 Color, 4 Color, Black (1PC) • Enter CD width and FD width (0 to 191 dots). • Type the density level (0 to “255”). • Select “Normal” or Reverse.

10.13.5 Solid Pattern

Functions	• To produce each of the C, M, Y, and K solid patterns.
Use	• Used for checking reproducibility of image density.
Pattern	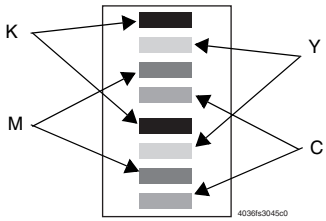 SINGLE HYPER Gradation Density: 255
Setting/ Procedure	• # of Print (“1” to 999) • Select “SINGLE” (single copy) or MULTI (multi copy). • Select FEET or “HYPER.” • Select “Gradation” or Resolution if HYPER has been selected. • Type the density level (0 to “255”).

10.13.6 Color Sample

Functions	• To produce a color sample.
Use	• Used for checking reproducibility of each of the different colors.
Pattern	 SINGLE HYPER Gradation
Setting/ Procedure	• # of Print (“1” to 999) • Select “SINGLE” (single copy) or MULTI (multi copy). • Select FEET or “HYPER.” • Select “Gradation” or Resolution if HYPER has been selected. • Produce 12-gradation-level patches of C, M, Y, K, R, G, and B, and a patch of each of the 12 reference colors in the hue circle with lightness and saturation corrected.

10.13.7 8 Color Solid Pattern

Functions	• To produce an 8-color solid pattern.
Use	• Used for checking color reproducibility and uneven density of each color.
Pattern	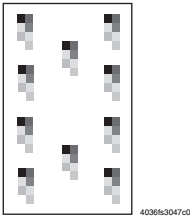 SINGLE HYPER Gradation Density: 255
Setting/ Procedure	• # of Print (“1” to 999) • Select “SINGLE” (single copy) or MULTI (multi copy). • Select FEET or “HYPER.” • Select “Gradation” or Resolution if HYPER has been selected. • Type the density level (0 to “255”).

10.13.8 Running Mode

Functions	• To test the printing operation in running mode.
Use	• Use to check the printing operation in running mode from each paper source.
Setting/ Procedure	*1.* Call the Service Mode to the screen. *2.* Touch these keys in this order: [Test Mode] → [Running Mode]. *3.* Select the paper size (Tray 1, bypass only). *4.* Select the paper type. *5.* Press the Start key to start the running mode. *6.* Pressing the Stop key will stop operation.

10.13.9 Fax Test

For details, see FK-502 Service Manual.

10.14 ADF

For details, see DF-608 Service Manual.
See P.26

10.15 FAX

For details, see FK-502 Service Manual.

10.16 Finisher

For details, see FS-514 Service Manual.
See P.46

10.17 Internet ISW

- By using this setting, the firmware stored in the server can be downloaded over internet for upgrading.
- For details for upgrading the firmware, refer to “Firmware upgrade” in the Maintenance section.

See P.43

10.17.1 Internet ISW Set

Functions	• To set whether or not to enable each setting for Internet ISW.
Use	• To use when upgrading the firmware by Internet ISW. • Each setting such as Server setting will be valid by setting this to “ON”. **NOTE** • **When the following setting is set to “ON”, this setting will automatically be set to “OFF” and cannot be changed.** **[Administrator Setting] → [Security Setting] → [Enhanced Security Mode]**
Setting/ Procedure	• The default setting is OFF. ON “OFF”

10.17.2 HTTP Setting

- It will be displayed only when [Internet ISW Set] is set to “ON”.

A. Data Input Setting

Functions	• To set whether or not to enable downloading using the HTTP protocol.
Use	• To use when accessing the server using the HTTP protocol. • Setting on the proxy server will be valid when this setting is “ON”.
Setting/ Procedure	• The default setting is OFF. ON “OFF”

B. Connect Proxy

Functions	• To set whether or not to connect via proxy server when accessing the server.
Use	• To use when accessing the server via proxy server.
Setting/ Procedure	• The default setting is OFF. ON “OFF”

C. Proxy Server

Functions	• To set the address and the port number for the proxy server.
Use	• To use when accessing the server via proxy server.
Setting/ Procedure	<Server Address> • Enter the IP address using the version 4 method or FQDN method. <Port Number> • Enter the value between 1 and 65535 using the 10-key pad.

D. Proxy Authentication

Functions	• To set the login name or password when authentication is necessary for accessing the proxy server.
Use	• To use when authentication is necessary for accessing the proxy server.
Setting/ Procedure	<Authentication> • The default setting is OFF. ON "OFF" <Log-in Name> • Enter the login name (up to 32 one-byte characters) on the on-screen keyboard. <Password> • Enter the password (up to 32 one-byte characters) on the on-screen keyboard.

E. Connection Time-Out

Functions	• To set the time for the timeout for accessing the server.
Use	• To use when changing the time for the timeout for accessing the server.
Setting/ Procedure	• The default setting is 60 sec. 30 to 300 sec.

10.17.3 FTP Setting

- It will be displayed only when [Internet ISW Set] is set to "ON".

A. Data Input Setting

Functions	• To set whether or not to enable downloading using FTP protocol.
Use	• To use when accessing the server with FTP protocol. • Setting this to "ON" will enable the proxy server setting.
Setting/ Procedure	• The default setting is ON. "ON" OFF

B. Connect Proxy

Functions	• To set whether or not to access the server via proxy server.
Use	• To use when accessing the server via proxy server.
Setting/ Procedure	• The default setting is OFF. ON "OFF"

C. Proxy Server

Functions	• To set the address and the port No. of the proxy server.
Use	• To use when accessing the server via proxy server.
Setting/ Procedure	<Server Address> • Enter the IP address using the version 4 method or FQDN method. <Port Number> • Enter the value between 1 and 65535 using the 10-key pad.

D. Connection Setting

Functions	• To set the port No. and the time for timeout when accessing the FTP server, and also to set whether or not to enable PASV mode.
Use	• To use when accessing the FTP server. • To use when connecting by the PASV (passive) mode (FTP server side will inform the connection port before connecting).
Setting/ Procedure	<Port Number> • Enter the value between 1 and 65535 using the 10-key pad. <Connection Time Out> • Enter the value between 1 and 60 (min.) using the 10-key pad. <PASV Mode> • The default setting is OFF. ON “OFF”

10.17.4 Forwarding Access Setting

A. User ID

Functions Use	• To register the user ID for accessing the program server where firmware is to be stored.
Setting/ Procedure	*1.* Select [User ID]. *2.* Enter the user ID (up to 64 one-byte characters) on the on-screen keyboard.

B. Password

Functions Use	• To register the password for accessing the program server where firmware is to be stored.
Setting/ Procedure	*1.* Select [Password]. *2.* Enter the password (up to 64 characters) on the on-screen keyboard.

C. URL

Functions Use	• To register the address and directory of the program server where the firmware is to be stored in URL.
Setting/ Procedure	*1.* Select [URL]. *2.* Enter the URL (up to 256 one-byte characters) on the on-screen keyboard. **NOTE** • **Enter the URL which format suits the protocol to be used.** **When connecting to http http:// (Host name or IP address)/ directory name or https:// (Host name or IP address)/directory name.** **When connecting to ftp ftp:// (Host name or IP address) / directory name.**

D. FileName

Functions Use	• To register the file name of the firmware data to be downloaded.
Setting/ Procedure	*1.* Select [FileName]. *2.* Enter the file name (up to 63 one-byte characters) on the on-screen keyboard.

10.17.5 Download

Functions	• Access the program server according to the Internet ISW setting, and download the firmware.
Use	• To use when updating the firmware via network.
Setting/ Procedure	*1.* Select [Download]. *2.* Touch [ISW Start] to start downloading the firmware. *3.* The message to show the status will be displayed on the screen while connecting and transferring data. **NOTE** • **When it failed to connect to the program server, or failed to download, the error code and the message will be displayed. Check the cause of the error by the error code, and follow the message for resetting.** **Refer to "Error cord list" for the error codes.** See P.73 *4.* When the firmware is normally upgraded, the main unit will automatically be restarted to complete the Internet ISW.

11. Enhanced Security

11.1 Enhanced Security function setting procedure

11.1.1 Procedure

1. Call the Service Mode to the screen.
2. Press the following keys in this order.
   Stop → 0→ Clear
3. Enhanced Security menu will appear.

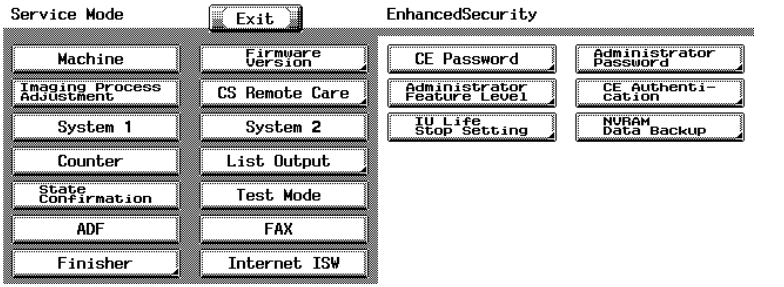

4037F3E611DA

11.1.2 Exiting

- Touch the [Exit].

11.2 Enhanced Security function tree

Service Mode		Ref. Page
Enhanced Security	CE Password	P.386
	Administrator Password	P.386
	Administrator Feature Level	P.387
	CE Authentication	P.387
	IU Life Stop Setting	P.387
	NVRAM Data Backup	P.388

11.3 Settings in the Enhanced Security

11.3.1 CE Password

Functions	• To set and change the CE password.
Use	• Use to change the CE password.
Setting/ Procedure	• Enter the CE password (8 digits) on the on-screen keyboard. • The initial setting is “92729272.” Current Password : Enter the currently using CE password. New Password : Enter the new CE password. Re-Input Password : Enter the new CE password again. **NOTE** • **When the following setting leads to the Password Rules [ON], the password with the same letters as well as the password which is same as the previous one cannot be changed.** **[Administrator Setting] → [Security Setting]** • **NEVER forget the CE password. When forgetting the CE password, call responsible person of KONICA MINOLTA.**

11.3.2 Administrator Password

Functions	• To set and change the administrator password.
Use	• Use to change the administrator password. • Use this function when the administrator forget the administrator password because a new password can be set without entering the current administrator password with this.
Setting/ Procedure	• Enter the administrator password (8 digits) on the on-screen keyboard. • The initial setting is “12345678.” New Password : Enter the new administrator password. Re-Input Password : Enter the new administrator password again. **NOTE** • **When the following setting leads to the Password Rules [ON], the password with the same letters, the password which is same as the previous one and the password of less than eight digits cannot be changed.** **[Administrator Setting] → [Security Setting]**

11.3.3 Administrator Feature Level

Functions	• To set which modes to be allowed for the administrator to use in Service Mode.
Use	• Use when allowing the administrator to use some modes in Service Mode. • The modes allowed for the administrator to use in each setting are as follows.

Administrator setting function			Level 1	Level 2
[System Setting] → [Expert Setting]	Printer Adjustment	Erase Leading Edge	—	❍
	Scanner Adjustment	Leading Edge Adjustment	—	❍
		Centering	—	❍
		Horizontal Adjustment	—	❍
		Vertical Adjustment	—	❍
	ADF Adjust-ment	Centering	—	❍
		Original Stop Position	—	❍
		Centering Auto Adjustment	—	❍
		Auto Adj. of Stop Position	—	❍
[Standard Size Setting]	Original Glass Original Size Detect		—	❍
	Foolscap Size Setting		—	❍

Setting/ Procedure	• The default setting is Prohibit. Level1 Level2 “Prohibit”

11.3.4 CE Authentication

- It will not be displayed when the following settings are set to “ON”.
  [Administrator Setting] → [Security Setting] → [Enhanced Security Mode] or [Password Rules].

Functions	• To determine whether or not to authenticate CE password as entering Service Mode.
Use	• Use when authenticating CE password as entering Service Mode. **NOTE** • **For setting the following setting to “ON”, set the CE Authentication to “ON” and change the initial CE password beforehand.** **[Administrator Setting] → [Security Setting] → [Enhanced Security Mode] or [Password Rules]**
Setting/ Procedure	• The default setting is OFF. ON “OFF”

11.3.5 IU Life Stop Setting

Functions	• To select whether or not to stop a print cycle when the IU reaches its service life.
Use	• Use to select not to stop the print cycle when the IU reaches its service life.
Setting/ Procedure	The default setting is Stop. “Stop” No Stop

11.3.6 NVRAM Data Backup

Functions	• To backup NVRAM data in the main unit to the flash memory.
Use	• To backup current data in order to prevent data in NVRAM from being erased unexpectedly. • To backup data manually. It usually makes backup every hour automatically. • Backup data can be restored by following the specified procedure when the trouble (CD3XX) occurred. Refer to “Troubleshooting” for details on restoration procedure. See P.482
Setting/ Procedure	*1.* Touch [NVRAM Data Backup]. *2.* Touch [Start] to start making a backup. *3.* Check the message [Backup is completed.], and turn main power switch OFF. Wait for ten seconds or more and turn main power switch back ON.

12. Billing Setting

12.1 Billing Setting function setting procedure

12.1.1 Procedure

1. Call the Service Mode to the screen.
2. Press the following keys in this order.
   Stop → 9
3. Billing Setting menu will appear.

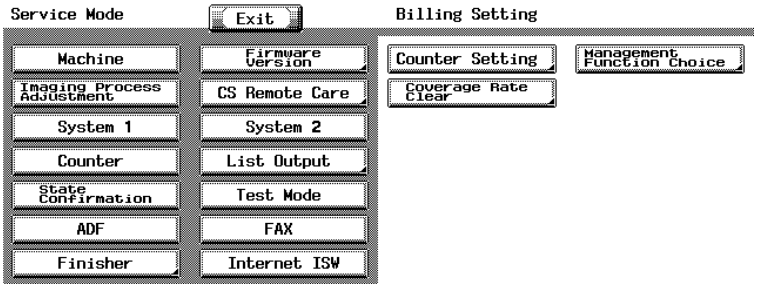

4037F3E612DA

12.1.2 Exiting

- Touch the [Exit].

12.2 Billing Setting function tree

Service Mode		Ref. Page
Billing Setting	Counter Setting	P.390
	Management Function Choice	P.391
	Coverage Rate Clear	P.396

12.3 Settings in the Billing Setting

12.3.1 Counter Setting

Functions	• To set the counting method for the total counter and size counter. • To set the size regarded as the large size (2 counts.)
Use	• Use to change the counting method for the counters.
Setting/ Procedure	Total Counter Mode 1: 1 count per 1 copy cycle (Default: Others 4, Japan) Mode 2: Large size is double counts (Default: US, Europe, Others 1, Others 2, Others 3) 2 **NOTE** • **The content of this setting is reflected in the count method with the key counter.**
	Size Counter • A3/11 x 17 : When it exceeds 279 mm in the main scan direction and 420 mm in the sub scan direction (exceeds 399 mm at fax scan), it is regarded as the large size. • A3/B4/11 x 17/8 1/2 x 14 : When it exceeds 215 mm in the main scan direction and 355 mm in the sub scan direction (exceeds 337 mm at fax scan), it is regarded as the large size. • A3/11 x 17/B4/8 1/2 x 14/Foolscap : When it exceeds 203 mm in the main scan direction and 330 mm in the sub scan direction (exceeds 313 mm at fax scan), it is regarded as the large size (However the size in the main scan direction changes according to the foolscap size setting.) • Not counted (Default: Others 4, Japan) • A3 and 11 x 17 (Default: US) • A3, B4, 11 x 17, and 8 1/2 x 14 (Default: Europe, Others 1, Others 2, Others 3) • A3, B4, Foolscap, 11 x 17, 11 x 14, and 8 1/2 x 14 ✻ Count-up table

Copying	1-Sided				2-Sided			
Size	Sizes other than those specified		Specified sizes		Sizes other than those specified		Specified sizes	
Mode	Mode		Mode		Mode		Mode	
	1	2	1	2	1	2	1	2
Total	1	1	1	2	2	2	2	4
Size	0	0	1	1	0	0	2	2
2-sided Total	0	0	0	0	1	1	1	1

0: No count; 1: 1 count; 2: 2 counts; 3: 3 counts; 4: 4 counts

Setting/ Procedure	Long Length Paper Counter Mode • When printing on the long paper (457.3 mm or over), the counting value will be the total of the value set by the total counter mode and the value by this setting. • The default setting is Mode 4. Mode 1 : + 0 count Mode 2 : + 1 count Mode 3 : + 2 counts (457.3 to 915.0 mm will be + 1 count) Mode 4 : + 3 counts (457.3 to 686.0 mm will be + 1 count, and 686.1 to 915.0 mm will be + 2 count)

12.3.2 Management Function Choice

- To set whether or not the following items are to be mounted.
  Key Counter, Management Device (Data controller), Authentication Device, Vendor or Key Counter IF Vendor

NOTE
- **It will not be displayed when the following setting is set to "ON".**
  [Administrator Setting] → [Security Setting] → [Enhanced Security Mode]
- **When the setting shows that [Management Device 1], [Management Device 2], [Vendor 1], [Vendor 2] or [Key Counter IF Vendor] is mounted, the following applications will be invalid.**
  PC FAX transmission / HDD TWAIN/PS Box Operator / PS Scan Direct / PS Job Spooler / Fiery: Scan to Box
  Also, the following setting will be set to "Disable".
  [Administrator Setting] → [Security Setting] → [Management Function Setting] → [Network Function Setting]

A. Key Counter IF Vendor

Functions	• To set whether or not the Key Counter IF Vendor is installed.
Use	• Set when the Key Counter IF Vendor is mounted.
Setting/ Procedure	• Select color mode of Key Counter. (Only for Key counter, the type of the color mode is same after mounting.) • Select message of Vendor. ✻ Message Type 1: Message for Key Counter Type 2: Message for Card scanning Type 3: Message for ID management

B. Authentication Device

Functions	• To set whether or not the authentication device is installed.
Use	• Set when the authentication device (PageACSES) is mounted.
Setting/ Procedure	**NOTE** • **The setting is available only when user authentication and account track are set "OFF" with [Administrator Setting] → [User Authentication/Account Track] → [General Setting].** • **When the Authentication Device mount setting is set to "mount", make sure that the [Internet Fax] setting is set to "OFF" with [Service Mode] → [System 2] → [Network Fax Settings].**

C. Key Counter Only

Functions	• To set whether or not the key counter is installed.
Use	• Set when the key counter is mounted. • Select [Color Mode] and [Message] when the key counter is mounted.
Setting/ Procedure	✻ Color Mode • When [Mode 1] is set on [Total Counter Mode] after selecting [Billing Setting] → [Counter setting]. Mode 1: 1 count per 1 copy cycle Mode 2: 2 counts per 1 copy cycle Mode 3: 3 counts per 1 copy cycle Mode 4: 4 counts per 1 copy cycle Mode 5: 5 counts per 1 copy cycle • When [Mode 2] is set on [Total Counter Mode] after selecting [Billing Setting] → [Counter setting] and large size is selected on [Large Size Counter Mode] Mode 1: 2 counts per 1 copy cycle Mode 2: 4 counts per 1 copy cycle Mode 3: 6 counts per 1 copy cycle Mode 4: 8 counts per 1 copy cycle Mode 5: 10 counts per 1 copy cycle • When [Mode 2] is set on [Total Counter Mode] after selecting [Billing Setting] → [Counter setting] and sizes other than large size are selected on [Large Size Counter Mode] Mode 1: 1 count per 1 copy cycle Mode 2: 2 counts per 1 copy cycle Mode 3: 3 counts per 1 copy cycle Mode 4: 4 counts per 1 copy cycle Mode 5: 5 counts per 1 copy cycle
Setting/ Procedure	✻ Message Select the message type when the administrative unit is mounted. Type 1: Message for key counter Type 2: Message for card scanning Type 3: Message for ID management Type 4: Message for remote SW **NOTE** • **The setting is available only when user authentication and account track are set "OFF" with [Administrator Setting] → [User Authentication/Account Track] → [General Setting].**

D. Management Device 1

Functions	• To set whether or not the management device 1 is installed.
Use	• Set when the management device 1 is mounted.
Setting/ Procedure	**NOTE** • **The setting is available only when user authentication is set "OFF" and account track is set "Off" or "Account Name + Password" with [Administrator Setting] → [User Authentication/Account Track] → [General Settings].**

E. Management Device 2

Functions	• To set whether or not the management device 2 is installed.
Use	• Set when the management device 2 is mounted.
Setting/ Procedure	✻ Management Setting • Select the Management Setting Mode Mode 1: Use contact type device (Logout with ID key is not allowed.) Mode 2: Use non-contact type device (Logout with ID key is allowed.) **NOTE** • **The setting is not available when either "External Server" of user authentication, "Password Only" of account track, "Do not synchronize" of user authentication and account track or "Allow" of public user access has been set with [Administrator Setting] → [User Authentication/Account Track] → [General Settings].**

F. Vendor 1

Functions	• To set whether or not the vendor 1 is installed.
Use	• Set when the vendor 1 is mounted. **NOTE** • **When using the vendor along with the key counter, inserting the key counter will set it to the "Key Counter Mode" and removing it will set it to the "Vendor Mode".**
Setting/ Procedure	• Select color mode and message of key counter. (Only for key counter, the type of the color mode and message are same after mounting.) • Select I/F and message of vendor. ✻ I/F Type 1: Coin vendor Type 2: Card keeper ✻ Message Type 1: Message for key counter Type 2: Message for card scanning Type 3: Message for ID management **NOTE** • **The setting is available only when user authentication and account track are set "OFF" with [Administrator Setting] → [User Authentication/Account Track] → [General Setting].**

G. Vendor 2

Functions	• To set whether or not the vendor 2 is installed.
Use	• Set when the vendor 2 is mounted. **NOTE** • **When using the vendor along with the key counter, inserting the key counter will set it to the "Key Counter Mode" and removing it will set it to the "Vendor Mode".**
Setting/ Procedure	• Select color mode and message of key counter. (Only for key counter, the type of the color mode and message are same after mounting.) • Select I/F and message of vendor. ✻ I/F Type 1: Coin vendor Type 2: Card keeper ✻ Message Type 1: Message for key counter Type 2: Message for card scanning Type 3: Message for ID management **NOTE** • **The setting is available only when user authentication and account track are set "OFF" with [Administrator Setting] → [User Authentication/Account Track] → [General Setting].**

NOTE

- **Performing the setup for each unit to be mounted will internally change the setting values below. It needs resetting when cancelling the setting in order to set back to "not mounted" because the setting value will remain.**

2 Setting Item		Vendor 1	Vendor 2	Key Counter IF Vendor	Authentication Device	Key Counter	Management Device 1	Management Device 2
Utility	Initial Setting	Factory Default	Factory Default	Factory Default	Factory Default	—	—	—
	Copy Operating Screen	ON				—	—	—
	Fax Active Screen	ON				—	—	—
	Fax Basic Screen Default Setting Default Tab	Direct Input			—	—	—	—
Administrator Setting	Network Function Setting	OFF			—	—	OFF	
	Each Function Setting (When IC-406 is not mounted)	Copy will be set to "ON". PC print, Send Data, and Print others will be set to "OFF".	Copy, PC print, Send Data, and Print others will be set to "ON".	Copy and PC print will be set to "ON".	Copy, PC print, Send Data, and Print others will be set to "ON".	—	Copy will be set to "ON". PC print, Send Data, and Print others will be set to "OFF".	Copy, PC print, Send Data, and Print others will be set to "ON".
	Each Function Setting (When IC-406 is mounted)	Send Data will be set to "OFF". (Other settings are the same as IC-406 is not mounted.)						

2	Setting Item	Vendor 1	Vendor 2	Key Counter IF Vendor	Authentication Device	Key Counter	Management Device 1	Management Device 2
Administrator Setting	Administrator Security Level	Prohibit				—	—	—
	Weekly Timer ON/OFF Setting	OFF			—	—	—	—
	Restrict Access to Job Settings	Changing Job Priority, Deleting Other User's Jobs, Registering and Changing Addresses, Changing Zoom Ratio will be set to "Restrict".				—	—	—
	Auto Zoom (Platen)	OFF	—	OFF	—	—	—	—
	Auto Zoom (ADF)	OFF	—	OFF	—	—	—	—
	Telephone Line Settings	—	—	—	—	—	—	Auto RX
	Forward TX Setting	OFF				—	—	—
	Incomplete TX Hold	OFF						—
	OpenAPI Setting	Access Setting will be set to "Restrict" and Authentication will be changed to "OFF" setting.				—	—	—
	IPP Setting	—	—	—	IPP Setting will be set to "OFF", and Accept IPP job will be set to "OFF".	—	—	—
	AppleTalk Setting	—	—	—	OFF	—	—	—
	SMB Setting	—	—	—	Scan Setting, Print Setting will be set to "OFF".	—	—	—
	E-Mail TX (SMTP)	—	—	—	E-Mail TX Setting, Scan to E-Mail, E-Mail Notification, Meter Count Notification will be set to "Restrict".	—	—	—
	E-Mail RX (POP)	—	—	—	E-Mail RX Setting will be set to "OFF".	—	—	—
	LDAP Setting	—	—	—	Enabling LDAP will be set to "OFF".	—	—	—
	Status Notification Setting Notification Item Setting	—	—	—	All setting items will be set to "OFF".	—	—	—
	Prefix/Suffix Setting	—	—	—	ON/OFF Setting will be set to "OFF".	—	—	—

12.3.3 Coverage Rate Clear

Functions	• To clear the coverage rate
Use	• Use to clear the coverage rate
Setting/ Procedure	• The default setting is Unset. Set "Unset" • Touching [END] key will clear the coverage rate.

13. Procedure for resetting

13.1 Trouble resetting

Functions	• If the all troubles occur and the status would not be cleared by turning main power switch OFF and ON again, or opening and closing the front door, clear the status of the machine.
Use	• To be used when the status would not be cleared by turning main power switch OFF and ON again, or opening and closing the front door in case of a trouble.
Setting/ Procedure	*1.* Turn OFF the main power switch. *2.* Turn main power switch ON while pressing the Utility/Counter key. *3.* Touch [Trouble Reset]. *4.* Check to make sure that [OK] is displayed and the it has been reset. *5.* After turning off the main power switch, turn it on again more than 10 seconds after and check if the machine starts correctly.

13.2 Contents to be cleared by reset function

Items for clearing / Contents to be cleared			Front door open/close	Main power switch OFF/ON	Trouble resetting	Initialization	
						System Error Clear	Data Clear
Jam display			❍	—	—	❍	❍
Malfunction display	Rank A	Fusing	—	—	❍	❍	—
		Optical	—	—	❍	❍	❍
	Rank B		❍	—	❍	—	—
	Rank C		—	❍	❍	—	—
Erratic operation / display			—	❍	—	—	—
Utility Mode (Except items on Expert Adjustment.)			—	—	—	—	❍
Service Mode (System 1/2)			—	—	—	—	❒ *1
Billing Setting	Counter Setting		—	—	—	—	❍
	Management Function Choice		—	—	—	—	❍
Adjustment of the touch panel position			—	—	—	—	❍

❍: Will be cleared (initialized)
-: Will not be cleared

❒ *1: Items to be cleared	
System 1	Marketing Area (Fax Target only)
	Foolscap Size Setting
	Install Date
	Tel/Fax Number
	No Sleep
	Original Size Detection
System 2	HDD
	Image Controller Setting

14. Mechanical adjustment

14.1 Mechanical adjustment of the scanner section

14.1.1 Adjustment of the scanner motor belt

This adjustment must be made in the following case:
- **The scanner motor assy has been removed.**
- **The scanner drive cables have been rewound.**

1. Remove the upper rear cover and the IR rear cover.
See P.82, P.79

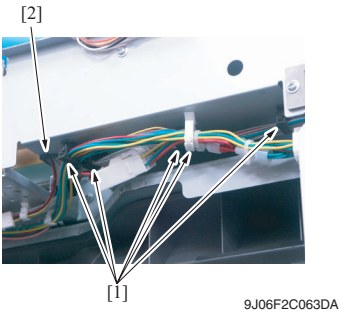

2. Remove the harness from five wire saddles [1] and the edge cover [2].

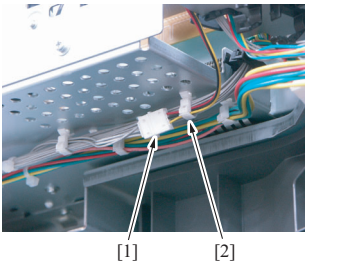

3. Disconnect the connector [1], and remove the harness from the wire saddle [2].

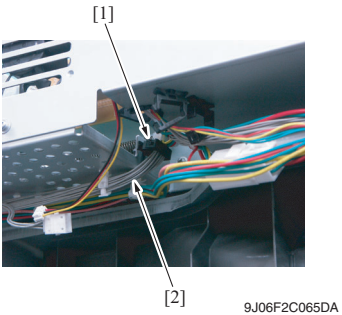

4. Remove the harness [2] from the wire saddle [1].

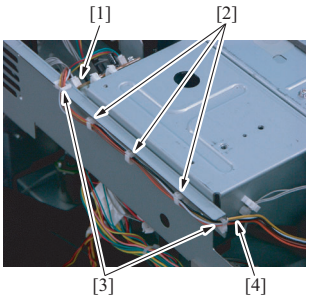

5. Remove the connector [1], and disconnect the harness [4] from three wire saddles [2] and two edge covers [3].

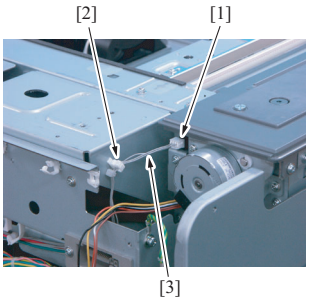

6. Remove the connector [1], and disconnect the harness [3] from the wire saddle [2].

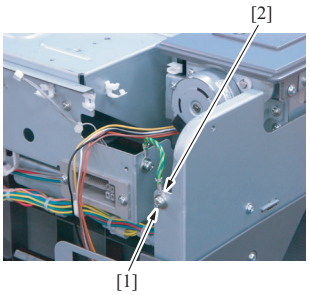

7. Remove the connector [1], and disconnect the harness [3] from the wire saddle [2].

8. Remove 16 screws [1], and remove the reinforcement frame [2].

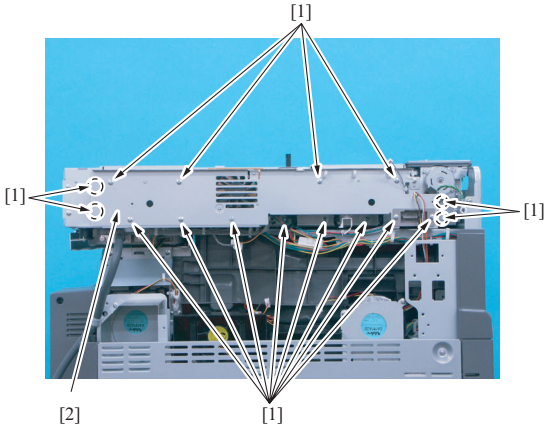

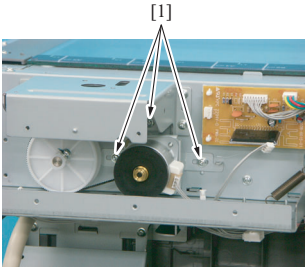

9. Loosen the three screws [1] that secure the scanner motor mounting bracket.

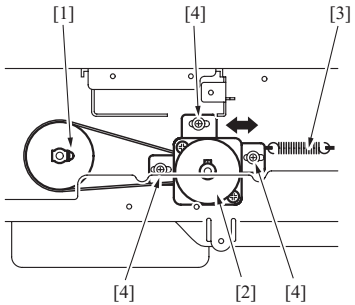

10. With the scanner drive gear set screw [1] located on the right-hand side as shown on the left, slide the scanner motor assy [2] to the left and check that it is returned to the original position by the tension of the spring [3].
Perform this step three times.

11. Tighten the three screws [4] to fix the scanner motor assy into position.

14.1.2 Focus positioning of the scanner and mirrors unit

This adjustment must be made in the following case:

- **The scanner drive cables have been rewound**

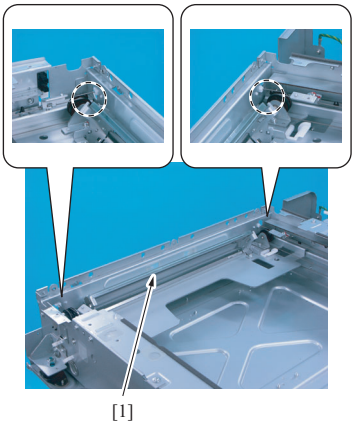

9J06F3C001DA

1. Move the mirror unit [1] to the left edge of the IR frame completely.

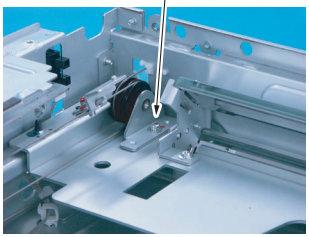

9J06F3C002DB

2. When both edges of the mirror unit do not touch the left edge of the IR frame, loosen the adjustment screw (red-painted) [1] on the mirror unit. Move the mirror unit until it touches the left edge of the IR fame, and tighten it back.
3. Then conduct scanner positioning adjustment.

14.2 Scanner position adjustment

This adjustment must be made in the following case:

- **The scanner drive cables have been rewound.**
- **Focus positioning of the scanner and mirrors unit must be completed.**

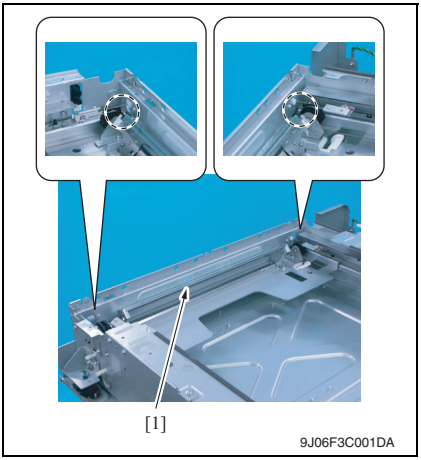

1. Move the mirror unit [1] to the left edge of the IR frame completely.

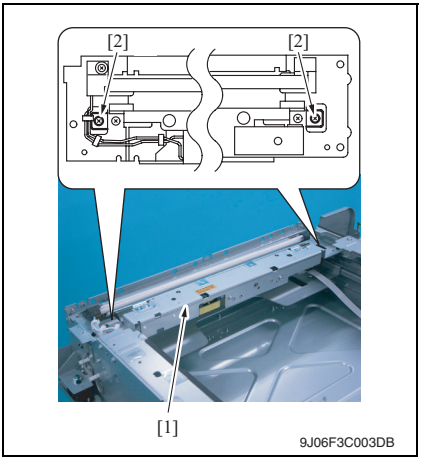

2. Move the mirror unit [1] to the left edge of the IR frame completely.
3. Secure the scanner unit with scanner's two positioning screws [2].
4. Mount the original glass moving unit, and adjust the height of the original glass moving unit.

See P.403

NOTE

- **Whenever the scanner drive cables have been removed, be sure to carry out the [Feed Direction Adjustment] procedure.**

See P.319

- **When using the optional automatic document feeder DF-608, perform the following setting.**
  [Service Mode] → [ADF] → [Read Pos Adj]

See the optional DF-608 Service Manual.

See P.30

14.2.1 Adjusting the height of the original glass moving unit

This adjustment must be made in the following case:

- **When replacing the original glass moving unit.**

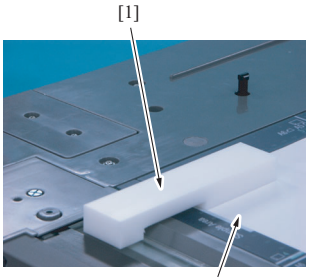

9J06F3C004DA

1. Set the height adjustment jig for the original glass moving unit [1].
   Insert the paper [2] between the original glass and the height adjusting jig for the original glass moving unit.

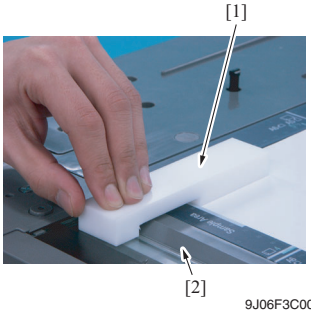

9J06F3C005DA

2. Press the height adjusting jig for the original glass moving unit [1] on the original glass moving unit side [2].

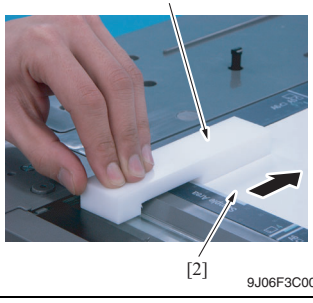

9J06F3C006DA

3. Pull the paper [2] while pressing the height adjusting jig for the original glass moving unit [1] and make sure that the paper will not come out.

NOTE

- **Pull the paper [2] while pressing the height adjusting jig for the original glass moving unit [1] and make sure that the paper will not come out.**

4. When the paper comes off, the adjustment of the height is necessary by the following procedure.

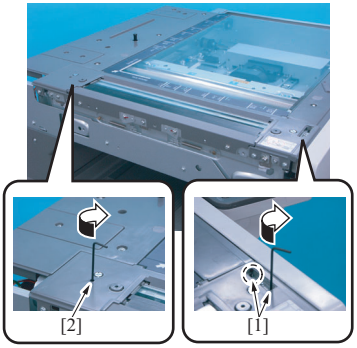

9J06F3C007DA

5. Turn the small adjusting screw for adjusting the original glass moving unit (two points on the near side [1] and one point on the far side [2]) using the hexagon wrench (2.0 mm) to adjust the height.

Turning clockwise: Up
Turning counterclockwise: Down

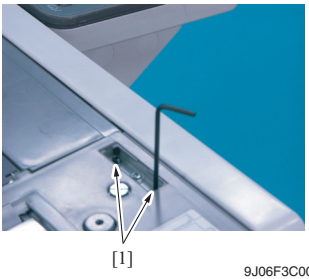

9J06F3C008DA

NOTE

- **Adjust two small screws [1] on the near side so both ends of the original glass moving unit will be fixed stable.**

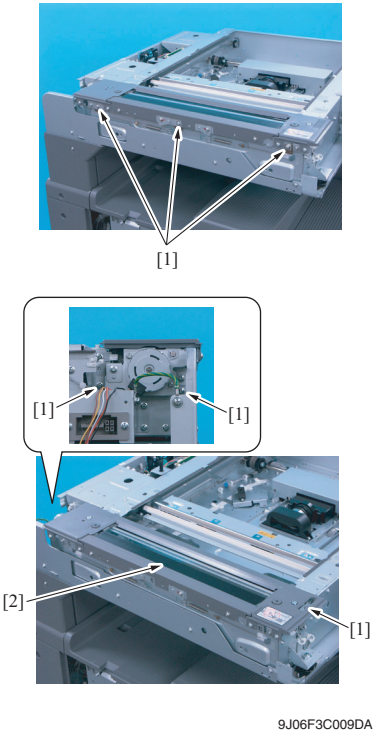

9J06F3C009DA

6. Fix the original glass moving unit [2] temporarily with six screws [1].
7. Check the height of the original glass moving unit again by following the steps 1 to 3.
8. Secure six screws [1].

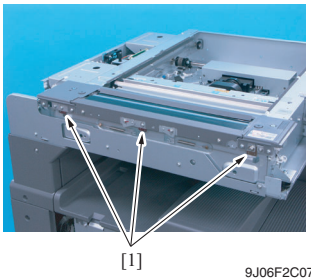

9J06F2C078DA

NOTE

- **When securing the screws, use the same number of spacers [1] of the same type with the ones used before removing the original glass moving unit.**

14.2.2 Adjusting the height of the guide support for the original glass moving unit

This adjustment must be made in the following case:

- **Only when original jam, bend, or tilt occurred during original feeding by ADF.**

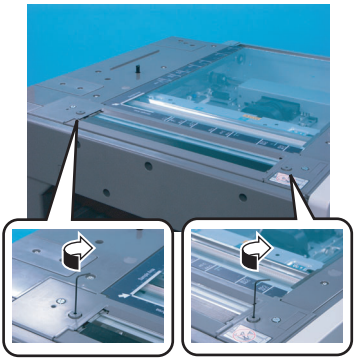

9J06F3C010DA

1. Adjust the guide support for the original glass moving unit by rotating the small screws (one on the near side and one on the far side) with the hexagon wrench (1.5 mm) to adjust the height.

Turning clockwise: Up
Turning counterclockwise: Down

NOTE

- **Feed a paper with ADF, and adjust so that no original jam, bending, or tilt will occur.**

14.3 Mechanical adjustment of the bypass tray section

14.3.1 Adjustment of the bypass paper size unit

This adjustment must be made in the following case:

- **The bypass paper size unit has been removed.**

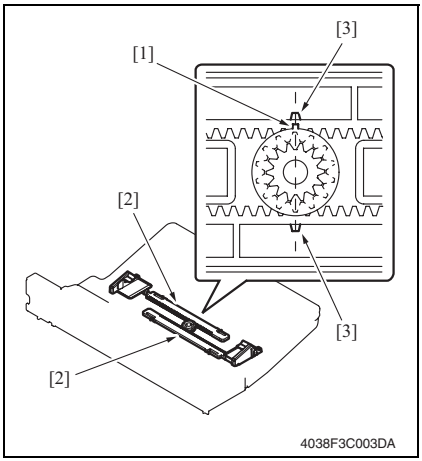

1. Install the gear so that the protrusion of the gear [1] and the mark [3] on the bypass guide rack gear [2] are aligned in a straight line.

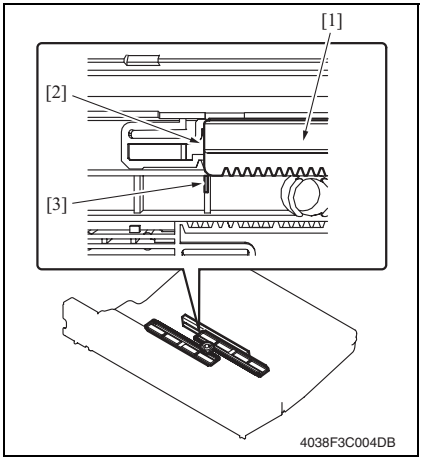

2. Install the bypass unit cover so that part A (edge) [2] of the rack gear [1] for the bypass paper size unit and part B [3] of the bypass unit cover are aligned in a straight line.

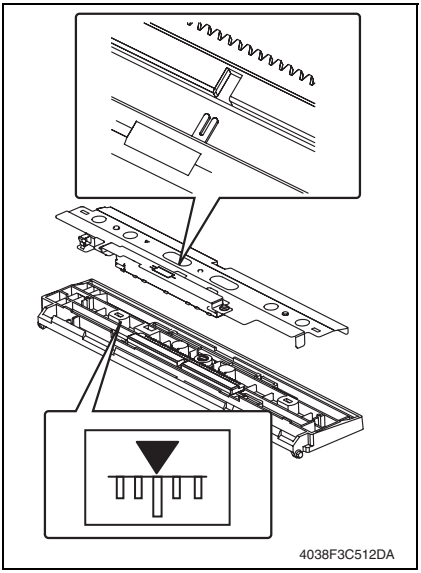

3. When the bypass paper size unit base is mounted, align the lever position of the bypass paper size unit with the tab at the center in a straight line.

4. After the bypass paper size unit base has been mounted, check that the lever of the bypass paper size unit moves smoothly in a manner operatively connected to the bypass guide.
5. Call the Service Mode to the screen and select [Machine] → [Manual Bypass Tray Adjustment]. Then, carry out manual bypass tray adjustment.

See P.321

14.4 PH unit mechanical adjustment

14.4.1 Skew adjustment

This adjustment must be made in the following case:

- **When PH unit is replaced.**

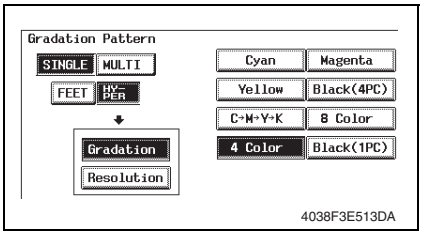

1. Turn ON the main power switch.
2. Select [Service Mode] → [Test Mode] → [Gradation Pattern] and output the test pattern with the following conditions.

Conditions: SINGLE, HYPER, Gradation, 4 Color

3. Using the output test pattern, check if each color of CMYK is printed in correct pattern.
   If the pattern is not correct, any troubles such as connecting failure in PH unit of the corresponding color may occur, which should be modified.
   If there isn't any problem, proceed to step 4.
4. Touch [Service Mode] → [Imaging Process Adjustment] → [Stabilizer] → [Initialize + Image Stabilization].
5. After image stabilization is completed, display [Service Mode] → [State Confirmation] → [Color Regist] and check if the Step Value: X of each color C, M, Y, is within the specification.

Specification: within ± 4

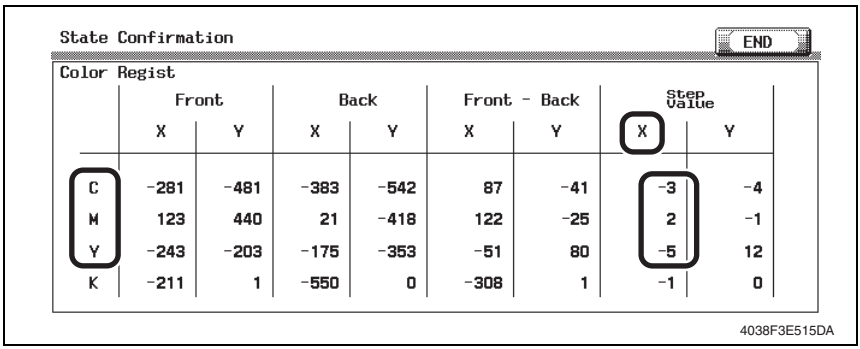

	Front		Back		Front - Back		Step Value	
	X	Y	X	Y	X	Y	X	Y
C	-281	-481	-383	-542	87	-41	-3	-4
M	123	440	21	-418	122	-25	2	-1
Y	-243	-203	-175	-353	-51	80	-5	12
K	-211	1	-550	0	-308	1	-1	0

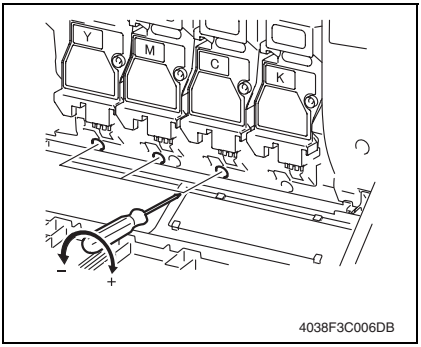

- If either value is out of the specification, follow the procedures shown below to adjust it to satisfy the specification.
- If the value of all color, C, M, Y satisfy the specification, proceed to step 10.

6. Open the front door.

7. Turn the skew adjustment dial of the corresponding PH with flathead screwdriver.

- To the left : When the step value goes - direction
- To the right : When the step value goes + direction

<Adjustment sample>
If the yellow value, among the step values confirmed in step 5, is [-5], which means out of the specification, turn the skew adjustment dial of PH (yellow) to the left (- direction) for 5 clicks.

NOTE
- **Do not execute the skew adjustment of black PH unit.**

8. Close the front door and touch [Imaging Process Adjustment] → [Stabilizer] → [Initialize + Image Stabilization].

9. After image stabilization is completed, display [Service mode] → [State Confirmation] → [Color Regist] again and check if the step value: X of each color C, M, Y is within the specification.

NOTE
- **Each color's Step value displayed on [Color Regist] changes every time the image stabilization is conducted. Therefore the value may change even if skew adjustment is not made.**

- If either value is out of the specification, repeat step 6 to 9 to continue the adjustment until all C, M, Y colors satisfy the specification.

10. Exit the Service Mode.

Troubleshooting

15. Jam display

15.1 Misfeed display

- When a paper misfeed occurs, the misfeed message, misfeed location, and paper location are displayed on the control panel of the machine.

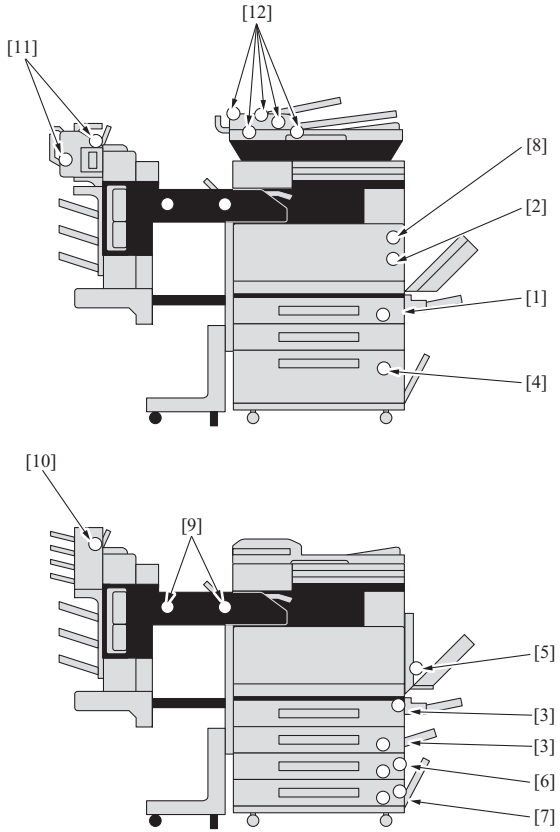

9J06F4C501DA

Display	Code *1	Misfeed location	Misfeed processing location	Action
[1]	1101	Tray 1 feed section	Right door, tray 1	P.416
[2]	3001	2nd image transfer section	Right door	P.417
[3]	1201	Tray 2 feed section	Tray 2 right door, tray 2	P.418
	2001	Tray 2 vertical transport section		
	1001	Manual bypass feed section	Right door	
[4]	1501	LCT feed section	LCT right door, tray 3	P.420
	2001	LCT vertical transport section		
[5]	9301	Duplex unit transport section	Duplex unit door	P.423
	9201	Duplex unit pre-registration section	Duplex unit door, right door	
[6]	1301	Tray 3 feed section	Tray 3 right door, tray 3	P.421
	2001	Tray 3 vertical transport section		
[7]	1401	Tray 4 feed section	Tray 4 right door, tray 4	P.422
	2001	Tray 4 vertical transport section		
[8]	3201	Fusing, exit section	Right door	P.425
[9]	7501 7502 7503 7504 7508	Finisher FS-514	Finisher front door Finisher transport cover	*2 P.61
[10]	7509	Mailbin MT-501	Finisher front door Misfeed-clearing door	*3 P.15
[11]	7503 7505 7506 7507	Saddle stitcher SD-503	Finisher door Misfeed-clearing door	*4 P.38
[12]	6601 6602 6603 6604 6605	Automatic Document Feeder DF-608	ADF left cover Original feed tray Original exit tray	*5 P.51

*1: JAM code is displayed at [Paper Jam History] under [Counter] available from Service Mode.
*2: See the optional FS-514 Service Manual.
*3: See the optional MT-501 Service Manual.
*4: See the optional SD-503 Service Manual.
*5: See the optional DF-608 Service Manual.

15.1.1 Misfeed display resetting procedure

- Open the corresponding door, clear the sheet of paper misfed, and close the door.

15.2 Sensor layout

- System mounted with PC-203.

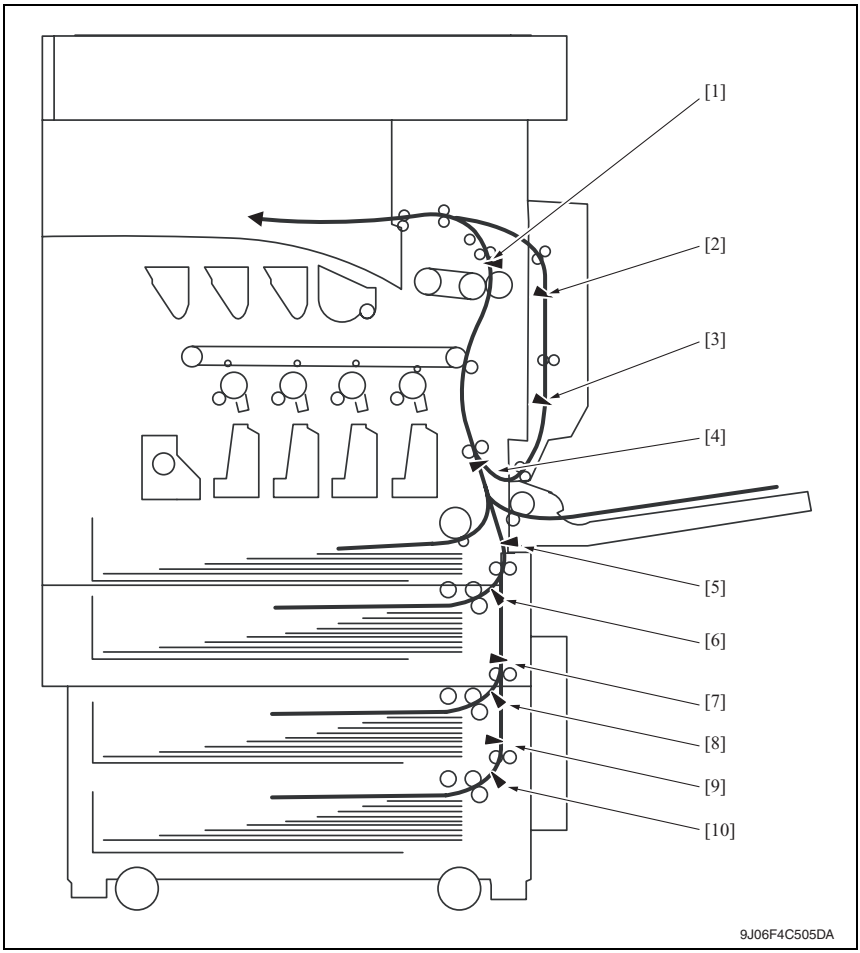

[1]	Exit sensor	PC2	[6]	Tray 2 paper take-up sensor	PC9-PC
[2]	Duplex unit transport sensor 1	PC1 DU	[7]	Tray 3 vertical transport sensor	PC117-PC
[3]	Duplex unit transport sensor 2	PC2 DU	[8]	Tray 3 take-up sensor	PC116-PC
[4]*1	Registration roller sensor	PC1	[9]	Tray 4 vertical transport sensor	PC126-PC
[4]*1	OHP detect sensor	PC4	[10]	Tray 4 take-up sensor	PC125-PC
[5]	Tray 2 vertical transport sensor	PC8-PC			

*1: Two different types of sensors are located in the area near [4].

- System mounted with PC-403.

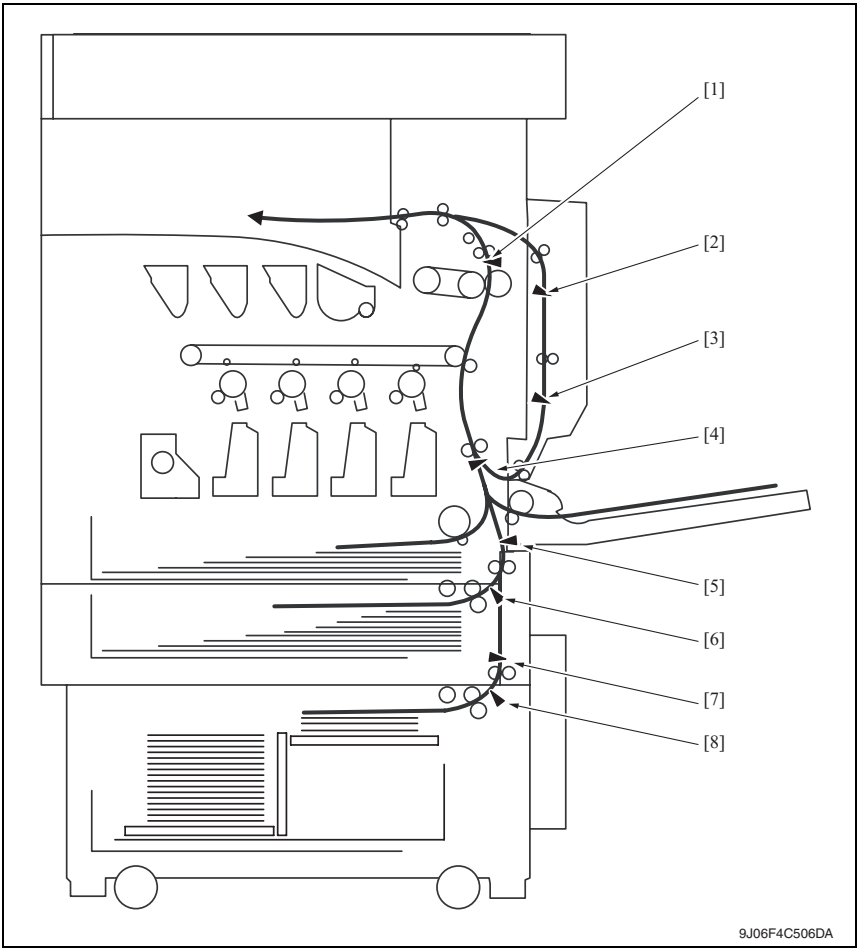

[1]	Exit sensor	PC2	[5]	Tray 2 vertical transport sensor	PC8-PC
[2]	Duplex unit transport sensor 1	PC1 DU	[6]	Tray 2 paper take-up sensor	PC9-PC
[3]	Duplex unit transport sensor 2	PC2 DU	[7]	Vertical transport sensor	PC2-LCT
[4]*1	Registration roller sensor	PC1	[8]	Paper take-up sensor	PC1-LCT
[4]*1	OHP detect sensor	PC4			

*1: Two different types of sensors are located in the area near [4].

15.3 Solution

15.3.1 Initial check items

- When a paper misfeed occurs, first perform the following initial check items.

Check item	Action
Does paper meet product specifications?	Replace paper.
Is the paper curled, wavy, or damp?	See “Solution when paper curl occurs” on P.415.
Is a foreign object present along the paper path, or is the paper path deformed or worn?	Clean the paper path and replace if necessary.
Are rolls/rollers dirty, deformed, or worn?	Clean or replace the defective roll/roller.
Are the edge guide and trailing edge stop at the correct position to accommodate the paper?	Set as necessary.
Are the actuators operating correctly?	Correct or replace the defective actuator.

15.3.2 Solution when paper curl occurs

Step	Check items/actions		
1	Turn over the stacked paper in the paper tray.	OK	—
		NG	Go to step 2.
2	Does paper curl occur just after a warm-up has been completed or the sleep mode has been turned OFF?	YES	Go to step 3.
	Does paper curl occur under normal conditions (under conditions other than those mentioned above)?	YES	Go to step 5.
3	*1.* Call the Service Mode to the screen. *2.* Select [Machine] → [Change Warm Up Time]. *3.* Change the setting to [Mode2]. See P.310	OK	—
		NG	Go to step 4.
4	*1.* Call the Service Mode to the screen. *2.* Select [Machine] → [Change Warm Up Time]. *3.* Change the setting to [Mode3]. See P.310	—	—
5	*1.* Call the Service Mode to the screen. *2.* Select [Machine] → [Fusing Temperature]. *3.* Select a paper type. *4.* Change the temperature of Heater Roller to [-10 °C]. See P.311	OK	—
		NG	Go to step 6
6	*1.* Call the Service Mode to the screen. *2.* Select [Machine] → [Fusing Temperature]. *3.* Select a paper type. *4.* Change the temperature of Heater Roller to [-20 °C]. See P.311	—	—

15.3.3 Misfeed at tray 1 feed section

A. Detection timing

Type	Description
Detection of misfeed at tray 1 feed section	The leading edge of the paper does not block the registration roller sensor (PC1) even after the lapse of a given period of time after the tray 1 paper feed clutch (CL2) has been energized.
Tray 1 feed section loop registration reversing jam	Rise timing of load for registration is earlier than the one for making the loop at front of the registration roller at tray 1 feed.

B. Action

Relevant electrical parts	
Tray 1 paper feed clutch (CL2) Registration roller sensor (PC1)	Mechanical control board (MFPB)

Step	Action	WIRING DIAGRAM	
		Control signal	Location (Electrical component)
1	Initial check items	—	—
2	PC1 I/O check, sensor check	MFPB CNSEN-3 (ON)	C-3
3	CL2 operation check	MFPB CNLP-13 (ON)	C-9 to 10
4	Change MFPB	—	—

15.3.4 Misfeed at 2nd image transfer section

A. Detection timing

Type	Description
Detection of misfeed at 2nd image transfer section	The leading edge of the paper does not block the exit sensor (PC2) even after the lapse of a given period of time after the registration roller clutch (CL1) has been energized.
	The registration roller sensor (PC1) is not unblocked even after the lapse of a given period of time after it has been blocked by the paper.
Detection of paper left in 2nd image transfer section	The registration roller sensor (PC1) is blocked when the main power switch is turned ON, a door or cover is opened and closed, or a misfeed or malfunction is reset.
	The OHP sensor (PC4) is blocked when the main power switch is turned ON, a door or cover is opened and closed, or a misfeed or malfunction is reset.
	The exit sensor (PC2) is blocked when the image transfer belt unit is being cleaned.
Misfeed detected as a result of delayed deactivation of sensor	Registration roller sensor (PC1) does not transmit the paper even after the lapse of a given period of time after the paper has blocked PC1 at tray 1 feed.
2nd image transfer section loop registration reversing jam	Rise timing of load for registration is earlier than the one for making loop at front of the registration roller when the sensor at front of the registration roller is blocked at paper feed.

B. Action

Relevant electrical parts	
Registration roller sensor (PC1) Exit sensor (PC2) OHP sensor (PC4) Registration roller clutch (CL1)	Mechanical control board (MFPB)

Step	Action	WIRING DIAGRAM	
		Control signal	Location (Electrical component)
1	Initial check items	—	—
2	PC1 I/O check, sensor check	MFPB CNSEN-3 (ON)	C-3
3	PC2 I/O check, sensor check	MFPB CNTH2-8 (ON)	C-13
4	PC4 I/O check, sensor check	MFPB CNSEN-6 (ON)	C-3
5	CL1 operation check	MFPB CNSEN-18 (ON)	C-5
6	Change MFPB	—	—

15.3.5 Misfeed at tray 2 feed, tray 2 vertical transport section

A. Detection timing

Type	Description
Detection of misfeed at tray 2 feed section	The leading edge of the paper does not block the tray 2 vertical transport sensor (PC8-PC) even after the lapse of a given period of time after the tray 2 paper feed motor (M1-PC) has been energized.
Detection of misfeed at tray 2 vertical transport section	The registration roller sensor (PC1) is not blocked even after the lapse of a given period of time after the paper has blocked the tray 2 vertical transport sensor (PC8-PC).
	Tray 2 vertical transport sensor (PC8-PC) does not transmit the paper even after the lapse of a given period of time after the paper has blocked PC8-PC.
Tray 2 vertical transport section loop registration reversing jam	Rise timing of load for registration is earlier than the one for making the loop at front of the registration roller at tray 2 feed.
Detection of paper left in tray 2	Tray 2 vertical transport sensor (PC8-PC) is blocked when the main power switch is turned ON, a door or cover is opened and closed, or a misfeed or malfunction is reset.
	Tray 2 paper take-up sensor (PC9-PC) is blocked when the main power switch is turned ON, a door or cover is opened and closed, or a misfeed or malfunction is reset.

B. Action

Relevant electrical parts	
Tray 2 paper take-up sensor (PC9-PC) Tray 2 vertical transport sensor (PC8-PC) Registration roller sensor (PC1) Tray 2 paper feed motor (M1-PC)	PC control board (PCCB) Mechanical control board (MFPB)

Step	Action	WIRING DIAGRAM	
		Control signal	Location (Electrical component)
1	Initial check items	—	—
2	PC9-PC I/O check, sensor check	PCCB PJ6PCCB-8 (ON)	S-25
3	PC8-PC I/O check, sensor check	PCCB PJ6PCCB-11 (ON)	S-25
4	PC1 I/O check, sensor check	MFPB CNSEN-3 (ON)	C-3
5	M1-PC operation check	PCCB PJ5PCCB-1 to 4	M-25
6	Change PCCB	—	—
7	Change MFPB	—	—

15.3.6 Misfeed at manual bypass feed section

A. Detection timing

Type	Description
Detection of misfeed at manual bypass feed section	The leading edge of the paper does not block the registration roller sensor (PC1) even after the lapse of a given period of time after the bypass paper feed clutch (CL5) has been energized.
Manual bypass feed section loop registration reversing jam	Rise timing of load for registration is earlier than the one for making the loop at front of the registration roller at bypass feed.

B. Action

Relevant electrical parts	
Registration roller sensor (PC1) Bypass paper feed clutch (CL5)	Mechanical control board (MFPB)

Step	Action	WIRING DIAGRAM	
		Control signal	Location (Electrical component)
1	Initial check items	—	—
2	PC1 I/O check, sensor check	MFPB CNSEN-3 (ON)	C-3
3	CL5 operation check	MFPB CNTRY1-2 (ON)	C-8
4	Change MFPB	—	—

15.3.7 Misfeed at LCT feed and LCT vertical transport section (PC-403)

A. Detection timing

Type	Description
Detection of misfeed at LCT feed section	The leading edge of the paper does not block the paper take-up sensor (PC1-LCT) or vertical transport sensor (PC2-LCT) even after the lapse of a given period of time after the take-up motor (M1-LCT) has been energized.
Detection of misfeed at LCT vertical transport section	The tray 2 vertical transport sensor (PC8-PC) is not blocked even after the lapse of a given period of time after the paper has blocked the vertical transport sensor (PC2-LCT).
	The vertical transport sensor (PC2-LCT) is not unblocked even after the lapse of a given period of time after it has been blocked by the paper.
LCT vertical transport section loop registration reversing jam	Rise timing of load for registration is earlier than the one for making the loop at front of the registration roller at LCT feed.
Detection of paper left in LCT	The vertical transport sensor (PC2-LCT) is blocked when the main power switch is turned ON, a door or cover is opened and closed, or a misfeed or malfunction is reset.

B. Action

Relevant electrical parts	
Paper take-up sensor (PC1-LCT) Vertical transport sensor (PC2-LCT) Tray 2 vertical transport sensor (PC8-PC) Take-up motor (M1-LCT) Registration roller sensor (PC1)	Control board (PWB-C1 LCT) Mechanical control board (MFPB)

Step	Action	WIRING DIAGRAM	
		Control signal	Location (Electrical component)
1	Initial check items	—	—
2	PC1 I/O check, sensor check	MFPB CNSEN-3 (ON)	C-3
3	PC1-LCT I/O check, sensor check	PWB-C1 LCT PJ5C1 LCT-2 (ON)	PC-403 E-10
4	PC2-LCT I/O check, sensor check	PWB-C1 LCT PJ5C1 LCT-5 (ON)	PC-403 E-10
5	PC8-PC I/O check, sensor check	PCCB PJ6PCCB-11 (ON)	S-25
6	M1-LCT operation check	PWB-C1 LCT PJ6C1 LCT-1 to 4	PC-403 E-11
7	Change PWB-C1 LCT	—	—
8	Change MFPB	—	—

15.3.8 Misfeed at tray 3 feed and tray 3 vertical transport section (PC-103/PC203)

A. Detection timing

Type	Description
Detection of misfeed at tray 3 feed or vertical transport section	The leading edge of the paper does not block the tray 3 vertical transport sensor (PC117-PC) even after the lapse of a given period of time after the tray3 take-up motor (M122-PC) has been energized.
	The tray 2 vertical transport sensor (PC8-PC) is not blocked even after the lapse of a given period of time after the paper has blocked the tray 3 vertical transport sensor (PC117-PC).
	The tray 3 vertical transport sensor (PC117-PC) is not unblocked even after the lapse of a given period of time after it has been blocked by the paper.
Tray 3 vertical transport section loop registration reversing jam	Rise timing of load for registration is earlier than the one for making the loop at front of the registration roller at tray 3 feed.
Detection of paper left in Tray 3	The tray 3 vertical transport sensor (PC117-PC) is blocked when the main power switch is turned ON, a door or cover is opened and closed, or a misfeed or malfunction is reset.
	The tray 3 take-up sensor (PC116-PC) is blocked when the main power switch is turned ON, a door or cover is opened and closed, or a misfeed or malfunction is reset.

B. Action

Relevant electrical parts	
Tray 3 take-up sensor (PC116-PC) Tray 3 vertical transport sensor (PC117-PC) Tray 2 vertical transport sensor (PC8-PC) Tray3 take-up motor (M122-PC) Registration roller sensor (PC1)	Control board (PWB-C2 PC) Mechanical control board (MFPB)

Step	Action	WIRING DIAGRAM	
		Control signal	Location (Electrical component)
1	Initial check items	—	—
2	PC1 I/O check, sensor check	MFPB CNSEN-3 (ON)	C-3
3	PC116-PC I/O check, sensor check	PWB-C2 PC PJ6C2 PC-8 (ON)	PC-103, PC-203 B-2
4	PC117-PC I/O check, sensor check	PWB-C2 PC PJ6C2 PC-11 (ON)	PC-103, PC-203 B-2
5	PC8-PC I/O check, sensor check	PCCB PJ6PCCB-11 (ON)	S-25
6	M122-PC operation check	PWB-C2 PC PJ5C2 PC-1 to 4	PC-103, PC-203 B-3
7	Change PWB-C2 PC	—	—
8	Change MFPB	—	—

15.3.9 Misfeed at tray 4 feed and tray 4 vertical transport section (PC203)

A. Detection timing

Type	Description
Detection of misfeed at tray 4 feed or vertical transport section	The leading edge of the paper does not block the tray 4 vertical transport sensor (PC126-PC) even after the lapse of a given period of time after the tray4 take-up motor (M123-PC) has been energized.
	The tray 3 vertical transport sensor (PC117-PC) is not blocked even after the lapse of a given period of time after the paper has blocked the tray 4 vertical transport sensor (PC126-PC).
	The tray 4 take-Up sensor (PC125-PC) is not unblocked even after the lapse of a given period of time after it has been blocked by the paper.
Tray 4 vertical transport section loop registration reversing jam	Rise timing of load for registration is earlier than the one for making the loop at front of the registration roller at tray 4 feed.
Detection of paper left in tray 4	The tray 4 vertical transport sensor (PC126-PC) is blocked when the main power switch is turned ON, a door or cover is opened and closed, or a misfeed or malfunction is reset.
	The tray 4 take-up sensor (PC125-PC) is blocked when the main power switch is turned ON, a door or cover is opened and closed, or a misfeed or malfunction is reset.

B. Action

Relevant electrical parts	
Tray 4 take-up sensor (PC125-PC) Tray 4 vertical transport sensor (PC126-PC) Tray 3 vertical transport sensor (PC117-PC) Tray4 take-up motor (M123-PC) Registration roller sensor (PC1)	Control board (PWB-C2 PC) Mechanical control board (MFPB)

Step	Action	WIRING DIAGRAM	
		Control signal	Location (Electrical component)
1	Initial check items	—	—
2	PC1 I/O check, sensor check	MFPB CNSEN-3 (ON)	C-3
3	PC125-PC I/O check, sensor check	PWB-C2 PC PJ10C2 PC-8 (ON)	PC-203 G-5
4	PC126-PC I/O check, sensor check	PWB-C2 PC PJ11C2 PC-2 (ON)	PC-203 G-5~6
5	PC117-PC I/O check, sensor check	PWB-C2 PC PJ6C2 PC-11 (ON)	PC-103, PC-203 B-2
6	M123-PC operation check	PWB-C2 PC PJ9C2 PC-1 to 4	PC-203 G-4 to 5
7	Change PWB-C2 PC	—	—
8	Change MFPB	—	—

15.3.10 Misfeed at duplex transport section (AD-503)

A. Detection timing

Type	Description
Detection of misfeed at duplex transport section	The duplex unit transport sensor 2 (PC2 DU) is not blocked even after the lapse of a given period of time after the paper has blocked the duplex unit transport sensor 1 (PC1 DU).
	The duplex unit transport sensor 1 (PC1 DU) is not unblocked even after the lapse of a given period of time after it has been blocked by the paper.
	The duplex unit transport sensor 2 (PC2 DU) is not unblocked even after the lapse of a given period of time after it has been blocked by the paper.
Detection of paper left in duplex transport section	Duplex unit transport sensor 1 (PC1 DU) or duplex unit transport sensor 2 (PC2 DU) is blocked when the main power switch is turned ON, a door or cover is opened and closed, or a misfeed or malfunction is reset.

B. Action

Relevant electrical parts	
Duplex unit transport sensor 1 (PC1 DU) Duplex unit transport sensor 2 (PC2 DU) Duplex unit switchback motor (M1 DU) Duplex unit transport motor (M2 DU)	Duplex control board (PWB-A DU) Mechanical control board (MFPB)

Step	Action	WIRING DIAGRAM	
		Control signal	Location (Electrical component)
1	Initial check items	—	—
2	PC1 DU I/O check, sensor check	—	Q-21
3	PC2 DU I/O check, sensor check	—	Q-22
4	M1 DU operation check	PWB-A DU PJ4A DU-1 to 4	S-22
5	M2 DU operation check	PWB-A DU PJ5A DU-1 to 4	S-22 to 23
6	Change PWB-A DU	—	—
7	Change MFPB	—	—

15.3.11 Misfeed at duplex unit pre-registration section (AD-503)

A. Detection timing

Type	Description
Detection of misfeed at duplex pre-registration section	The Registration roller sensor (PC1) is not blocked even after the lapse of a given period of time after a duplex paper feed sequence has been started.
Duplex unit pre-registration section loop registration reversing jam detection	Rise timing of load for registration is earlier than the one for making the loop at front of the registration roller at pre-registration feed.

B. Action

Relevant electrical parts	
Registration roller sensor (PC1)	Duplex control board (PWB-A DU) Mechanical control board (MFPB)

Step	Action	WIRING DIAGRAM	
		Control signal	Location (Electrical component)
1	Initial check items	—	—
2	PC1 I/O check, sensor check	MFPB CNSEN-3 (ON)	C-3
3	Change PWB-A DU	—	—
4	Change MFPB	—	—

15.3.12 Misfeed at fusing/exit section

A. Detection timing

Type	Description
Detection of misfeed at fusing/ exit section	The exit sensor (PC2) is not unblocked even after the lapse of a given period of time after the paper has blocked PC2.
	The exit sensor (PC2) is unblocked before the lapse of a given period of time after the paper has blocked PC2.
	The exit sensor (PC2) is not unblocked even after the lapse of a given period of time during the switch back operation.
	The duplex unit transport sensor 1 (PC1 DU) is not blocked even after the lapse of a given period of time after the exit sensor (PC2) has been unblocked by the paper during a switchback sequence.
Detection of paper left in exit section	The exit sensor (PC2) is blocked when the main power switch is turned ON, a door or cover is opened and closed, or a misfeed or malfunction is reset.

B. Action

Relevant electrical parts	
Exit sensor (PC2) Duplex unit transport sensor 1 (PC1 DU)	Duplex control board (PWB-A DU) Mechanical control board (MFPB)

Step	Action	WIRING DIAGRAM	
		Control signal	Location (Electrical component)
1	Initial check items	—	—
2	PC2 I/O check, sensor check	MFPB CNTH2-8 (ON)	C-13
3	PC1 DU I/O check, sensor check	—	Q-22
4	Change PWB-A DU	—	—
5	Change MFPB	—	—

16. Malfunction code

16.1 Alert code

- The machine's CPU performs a self-diagnostics function that, on detecting a malfunction, gives the corresponding warning code and maintenance call mark on the control panel.
- Touching the maintenance call mark will display the corresponding warning code on the state confirm screen.

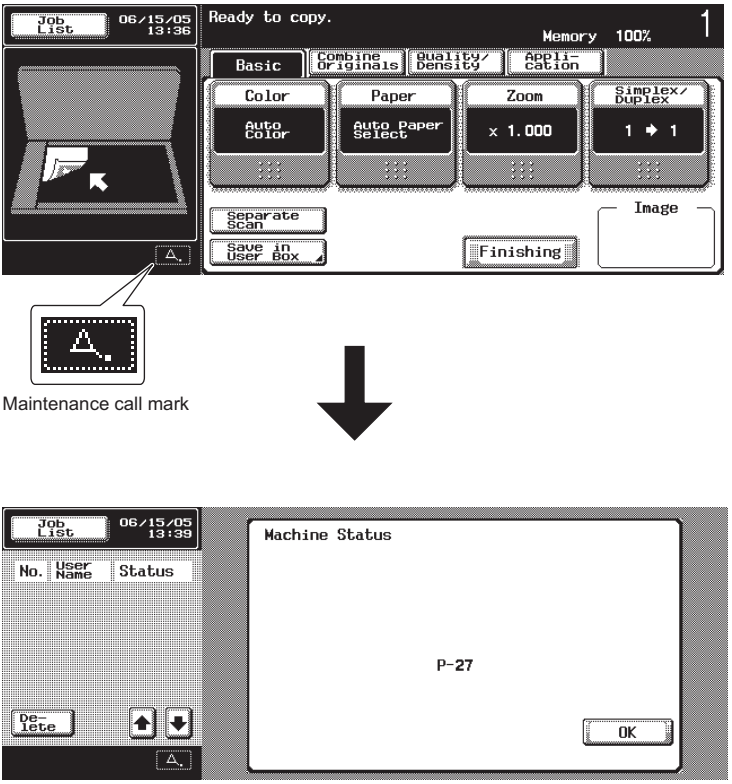

4038F4E512DA

16.1.1 Alert code list

- If an image stabilization or scanner fault occurs, the corresponding warning code appears.

Code	Item	Description
S-1	CCD clamp gain adjustment failure	• It is detected that the CCD clamp gain adjustment value is faulty.
D-1	Thin line detection	• While recovering from the power save mode or when the main/sub power switch is ON, it detects whether or not stain exist at the original glass moving unit when the ADF is closed. This warning will be displayed if the original is set to ADF when stain exist. • The thin line detection level and the warning display can be changed by the following setting. [Service Mode] → [System 2] → [Thin line Detect. Setting]
D-2	ADF scanning guide stain detection	• While recovering from the power save mode or when the main/sub power switch is ON, it detects whether or not stain exist at the scanning guide when the ADF is closed. This warning will be displayed if the original is set to ADF when stain exist. • This setting is valid only when the [Detection during Paper Passing] available from the following setting is set to one between 2 and 6. [Service Mode] → [System 2] → [This Line Detect. Setting]
P-5	IDC sensor (front) failure	• All outputs of Sensor photoreceiver section from the detection point (unprinted surface on the Image Transfer Belt) are 0.5 V or less or 4.3 V or more at output checking during IDC/registration sensor adjustment. • All outputs of sensor photoreceiver section from the detection point (unprinted surface on the image transfer belt) are 1.9 V or less or 4.4 V or more at density setting during IDC/registration sensor adjustment. • The output of sensor photoreceiver section from the detection point (toner pattern on the image transfer belt) is 1.0 V or less after the adjustment. • During image stabilization (gamma correction control), the voltage output by the sampling from the adjustment pattern made on the image transfer belt is at the half of the voltage on the image transfer belt or under. • During stabilization (gamma correction control), the output value of the IDC sensor detected from the adjustment pattern made on the image transfer belt does not indicate the value which is half of the voltage on the image transfer belt or under for three consecutive times.
P-28	IDC sensor (back) failure	
P-6	Cyan imaging unit failure	• All density readings taken from the density pattern produced on the transfer belt are 1.0 g/m² (IDC sensor photoreceiver output) or less during max. density adjustment (Vg/Vdc adjustment).
P-7	Magenta imaging unit failure	
P-8	Yellow imaging unit failure	
P-9	Black imaging unit failure	

Code	Item	Description
P-21	Color shift test pattern failure	• The number of points detected in the main scan direction is more or less than the specified value during main scan direction registration correction. • The number of points detected in the sub scan direction is more or less than the specified value during sub scan direction registration correction.
P-22	Color shift adjust failure	• The color shift amount is greater than the specified range during main scan direction registration correction. • The color shift amount is greater than the specified range during sub scan direction registration correction.
P-26	1st image transfer ATVC (K) failure	• An abnormal average value is detected during an adjustment of the first image transfer ATVC value of black.
P-27	2nd image transfer ATVC failure	• An abnormal average value is detected during an adjustment of the second image transfer ATVC value.
P-29	1st image transfer ATVC (color) failure	• An abnormal average value is detected during an adjustment of the first image transfer ATVC value of color.
P-30	Color PC drum sensor malfunction	• The output from the color PC drive main and sub sensors remains unchanged for a continuous period of 1,000 ms while the color PC drum motor is turning stably and the lock signal is active (LOW-0).
P-31	Black PC drum sensor malfunction	• The output from the black PC drive main and sub sensors remains unchanged for a continuous period of 1,000 ms while the main motor is turning stably and the lock signal is active (LOW-0).

16.2 Solution

16.2.1 S-1: CCD clamp/gain adjustment failure

Relevant electrical parts	
Scanner assy	CCD sensor unit Image processing board (IPB)

Step	Action
1	Correct the harness connection between CCDB and IPB if faulty.
2	Check for possible extraneous light and correct as necessary.
3	Clean the lens, mirrors, CCD surface, and shading sheet if dirty
4	Correct reflective mirror of the scanner if faulty, or change scanner.
5	Change CCD sensor unit.
6	Change IPB.

16.2.2 D-1: Thin line detection

Relevant electrical parts	
Original glass moving unit	Image processing board (IPB) Mechanical control board (MFPB)

Step	Action
1	Wipe clean the glass surface of the original glass moving unit.
2	Correct the harness connection between IPB and MFPB if faulty.
3	Change original glass moving unit.
5	Change IPB.
6	Change MFPB.

16.2.3 D-2: ADF scanning guide stain detection

Relevant electrical parts	
ADF scanning guide (DF-608)	

Step	Action
1	Wipe clean the surface of the ADF scanning guide with a soft cloth, if it is dirty. See the DF-608 Service Manual. See P.11

16.2.4 P-5: IDC sensor (front) failure

16.2.5 P-28 IDC sensor (back) failure

Relevant electrical parts	
IDC / registration sensor /F (SE1) IDC / registration sensor /R (SE2)	Mechanical control board (MFPB) High voltage unit (HV1) Image transfer belt unit

Step	Action
1	Wipe clean the surface of the transfer belt with a soft cloth, if it is dirty
2	Change the image transfer belt unit if the transfer belt is damaged.
3	Reinstall or reconnect SE1 or SE2, sensor shutter or connector, if it is installed or connected improperly.
4	Clean SE1 or SE2 if it is dirty
5	Check the HV1 connector for proper connection and correct as necessary.
6	Open/close the front door, run an image stabilization sequence, and select [State Confirmation] → [Level History 1] to check the IDC value. IDC1: SE1, IDC2: SE2 If the value is 1.0 V or less, change SE1 or SE2.
7	Change MFPB

16.2.6 P-6: Cyan imaging unit failure

16.2.7 P-7: Magenta imaging unit failure

16.2.8 P-8: Yellow imaging unit failure

16.2.9 P-9: Black imaging unit failure

Relevant electrical parts	
Imaging unit /C Imaging unit /M Imaging unit /Y Imaging unit /K	Image transfer belt unit High voltage unit (HV1)

Step	Action
1	Select [Imaging Process Adjustment] → [D Max Density] and, if the setting value is negative, readjust.
2	Check the drive transmission portion of the Imaging Unit and correct as necessary.
3	Clean the IDC / registration sensor /F (SE1) or IDC / registration sensor /R (SE2) window if dirty.
4	Clean the contact of the imaging unit connector if dirty.
5	Check the HV1 connector for proper connection and correct as necessary.
6	Change imaging unit.
7	Change the image transfer belt unit.

16.2.10 P-21: Color shift test pattern failure

Relevant electrical parts	
Image transfer belt unit	

Step	Action
1	Wipe clean the surface of the transfer belt with a soft cloth, if it is dirty.
2	Change the image transfer belt unit if the transfer belt is damaged.

16.2.11 P-22: Color shift adjust failure

Relevant electrical parts	
IDC / registration sensor /F (SE1)	IDC / registration sensor /R (SE2)

Step	Action
1	Slide out the imaging unit and reinstall it in position.
2	Reinstall or reconnect SE1 or SE2 if it is installed or connected improperly.
3	Check the vertical transport guide for installed position and correct as necessary.

16.2.12 P-26: 1st image transfer ATVC (black) failure

16.2.13 P-27: 2nd image transfer ATVC failure

16.2.14 P-29: 1st image transfer ATVC (color) failure

Relevant electrical parts	
High voltage unit (HV1) Mechanical control board (MFPB)	Image transfer belt unit

Step	Action
1	Check the contact of the transfer belt unit and that of HV1 for connection and clean or correct the contact as necessary.
2	Change the image transfer belt unit.
3	Change HV1.
4	Change MFPB.

16.2.15 P-30: Color PC drum sensor malfunction

Relevant electrical parts	
Color PC drive main sensor (PC15) Color PC drive sub sensor (PC17)	Transport drive assy Mechanical control board (MFPB)

Step	Action
1	Perform the faulty sensor check procedure. *1
2	Check the sensor, for which a faulty condition has been checked, for installed position and proper connector connection.
3	Wipe the sensor, for which a faulty condition has been checked, clean of dirt if any.
4	If P-30 occurs again, change the transport drive assy.
5	Change MFPB.

*1: Faulty sensor check procedure

1. Open the front door and turn ON the main power switch of the machine.
2. Call the [Sensor Check] screen to the screen by way of Service Mode.

For details how to display, see “Adjustment /Setting.”
See P.364

3. Close the front door and start [Stabilizer].
4. During the stabilizer sequence, check to see if the values of the phase detection sensors (color PC drive main/sub sensors) change.
5. A sensor is faulty if its value does not change.

16.2.16 P-31: Black PC drum sensor malfunction

Relevant electrical parts	
Black PC drive main sensor (PC16) Black PC drive sub sensor (PC18)	Transport drive assy Mechanical control board (MFPB)

Step	Action
1	Perform the faulty sensor check procedure. *1
2	Check the sensor, for which a faulty condition has been checked, for installed position and proper connector connection.
3	Wipe the sensor, for which a faulty condition has been checked, clean of dirt if any.
4	If P-31 persists, change the transport drive assy.
5	Change MFPB.

*1: Faulty sensor check procedure

1. Open the front door and turn ON the main power switch of the machine.
2. Call the [Sensor Check] screen to the screen by way of Service Mode.

For details how to display, see “Adjustment /Setting.”
See P.364

3. Close the front door and start [Stabilizer].
4. During the stabilizer sequence, check to see if the values of the phase detection sensors (black PC drive main/sub sensors) change.
5. A sensor is faulty if its value does not change.

16.3 Trouble code

- The machine's CPU performs a self-diagnostics function that, on detecting a malfunction, gives the corresponding malfunction code on the control panel.

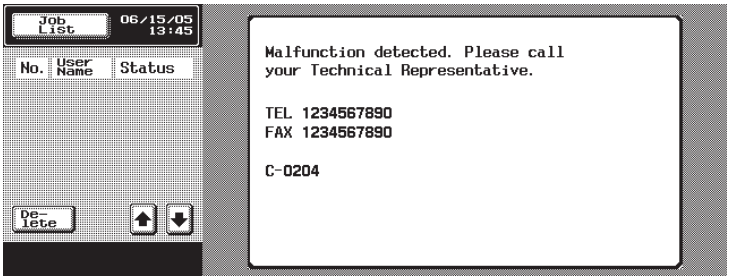

4038F4E513DA

16.3.1 Trouble code list

* For the details of the malfunction codes of the options, see the Service Manual for the corresponding option.

Code	Item	Description	Rank
C0001	LCT connection failed	See PC-403 Service Manual. See P.30	B
C0102	LCT vertical transport motor malfunction		B
C0204	Tray 2 elevator failure	• The lift-up sensor is not blocked even after the lapse of a given period of time after the lifting motion has been started.	B
C0206	Tray 3 elevator failure	See PC-103/PC-203 Service Manual. See P.24	B
C0208	Tray 4 elevator failure		B
C0209	LCT elevator motor malfunction (elevator malfunction)	See PC-403 Service Manual. See P.30	B
C0210	LCT ascent motion failure		B
C0211	Manual tray rise descent error	• The bypass lift-up sensor is not blocked even when the tray 2 vertical transport motor has turned for a given number of pulses after the sequence to move the paper lifting plate from the standby position to the feed position was started. • The bypass lift-up sensor is not unblocked even when the tray 2 vertical transport motor has turned for a given number of pulses after the sequence to move the paper lifting plate from the feed position to the standby position was started.	B
C0212	LCT ejection failure	See PC-403 Service Manual. See P.30	B
C0213	LCT shift gate malfunction		B
C0214	LCT shifting failure		B
C0215	LCT shift motor malfunction		B
C0301	Suction fan motor's failure to turn	• The fan lock signal remains HIGH for a predetermined continuous period of time while the motor remains stationary.	B

Code	Item	Description	Rank
C1183	Finishing option elevator drive malfunction	See FS-514 Service Manual. See P.65	B
C1190	Finishing option aligning bar moving mechanism malfunction 1		B
C1191	Finishing option aligning bar moving mechanism malfunction 2		B
C11A0	Paper holding drive failure		B
C11A1	Finishing option exit roller pressure/retraction failure		B
C11A2	Saddle exit roller pressure/ retraction failure	See SD-503 Service Manual. See P.42	B
C11A3	Shutter drive failure	See FS-514 Service Manual. See P.65	B
C11A4	Saddle exit motor failure	See SD-503 Service Manual. See P.42	B
C11A5	Saddle in & out guide motor failure		B
C11A6	Saddle layable guide drive failure		B
C11B0	Finishing option stapler unit CD drive failure	See FS-514 Service Manual. See P.65	B
C11B2	Finishing option stapling mechanism malfunction 1		B
C11B5	Side staple 1 drive failure	See SD-503 Service Manual. See P.42	B
C11B6	Side staple 2 drive failure		B
C11C0	Punch motor malfunction	See FS-514 Service Manual. See P.65	B
C11D0	Crease motor drive failure	See SD-503 Service Manual. See P.42	B
C1301	Finishing option cooling fan motor failure	See FS-514 Service Manual. See P.65	B
C2151	2nd image transfer roller separation	• The 2nd image transfer pressure position sensor doesn't turn ON (retracting) even after the lapse of a given period of time after the 2nd image transfer pressure/retraction motor has started rotating during the 2nd image transfer roller is retracting. • The 2nd image transfer pressure position sensor doesn't turn OFF (pressuring) even after the lapse of a given period of time after the 2nd image transfer pressure/retraction motor has started rotating during the 2nd image transfer roller is pressuring.	B

Code	Item	Description	Rank
C2152	Transfer belt separation	• The 1st image transfer pressure/retraction position sensor doesn't turn ON (retracting) even after the lapse of a given period of time after the 1st image transfer pressure/retraction clutch has turned ON during the transfer belt is retracting. • The 1st image transfer pressure/retraction position sensor doesn't turn OFF (pressuring) even after the lapse of a given period of time after the 1st image transfer pressure/retraction clutch has turned ON during the transfer belt is pressuring.	B
C2253	Color PC drum motor's failure to turn	• The motor lock signal remains HIGH for a predetermined continuous period of time while the motor is turning.	B
C2254	Color PC drum motor's turning at abnormal timing	• The motor lock signal remains LOW for a predetermined continuous period of time while the motor remains stationary.	B
C2255	Color developing motor's failure to turn	• The motor lock signal remains HIGH for a predetermined continuous period of time while the motor is turning.	B
C2256	Color developing motor's turning at abnormal timing	• The motor lock signal remains LOW for a predetermined continuous period of time while the motor remains stationary.	B
C2451	Transfer cleaner unit new article release	• A new installation is not detected when a new transfer cleaner unit (image transfer belt unit) is installed.	B
C2551	Abnormally low toner density detected cyan TCR sensor	• TC ratio in the developing machine, which is determined by toner replenishing amount control mechanism, is 5 % or less for a given number of times consecutively.	B
C2552	Abnormally high toner density detected cyan TCR sensor	• TC ratio in the developing machine, which is determined by Toner replenishing amount control mechanism, is 12 % or more for a given number of times consecutively.	B
C2553	Abnormally low toner density detected magenta TCR sensor	• TC ratio in the developing machine, which is determined by toner replenishing amount control mechanism, is 5 % or less for a given number of times consecutively.	B
C2554	Abnormally high toner density detected magenta TCR sensor	• TC ratio in the developing machine, which is determined by toner replenishing amount control mechanism, is 12 % or more for a given number of times consecutively.	B
C2555	Abnormally low toner density detected yellow TCR sensor	• TC ratio in the developing machine, which is determined by toner replenishing amount control mechanism, is 5 % or less for a given number of times consecutively.	B
C2556	Abnormally high toner density detected yellow TCR sensor	• TC ratio in the developing machine, which is determined by toner replenishing amount control mechanism, is 12 % or more for a given number of times consecutively.	B

Code	Item	Description	Rank
C2557	Abnormally low toner density detected black TCR sensor	• TC ratio in the developing machine, which is determined by toner replenishing amount control mechanism, is 4 % or less for a given number of times consecutively.	B
C2558	Abnormally high toner density detected black TCR sensor	• TC ratio in the developing machine, which is determined by toner replenishing amount control mechanism, is 12 % or more for a given number of times consecutively.	B
C2559	Cyan TCR sensor adjustment failure	• TCR sensor automatic adjustment does not function properly, failing to adjust to an appropriate value.	B
C255A	Magenta TCR sensor adjustment failure		B
C255B	Yellow TCR sensor adjustment failure		B
C255C	Black TCR sensor adjustment failure		B
C2651	Cyan imaging unit EEPROM access error	• The re-written data, which has been read out, checked and founded as error, is read out again and found as error. • The error was found when reading out the counter value.	C
C2652	Magenta imaging unit EEPROM access error		C
C2653	Yellow imaging unit EEPROM access error		C
C2654	Black imaging unit EEPROM access error		C
C2A01	Cyan toner cartridge EEPROM access error	• The re-written data, which has been read out, checked and founded as error, is read out again and found as error. • The error was found when reading out the counter value.	C
C2A02	Magenta toner cartridge EEPROM access error		C
C2A03	Yellow toner cartridge EEPROM access error		C
C2A04	Black toner cartridge EEPROM access error		C
C3101	Fusing pressure roller separation failure	• With the pressure roller being retracted, the pulse of the encoder sensor does not change even after the specified period of time has passed after the fusing pressure roller pressure/retraction motor started rotating. • With the pressure roller being pressed, the encoder pulse sensor does not change even after the specified period of time has passed after the fusing pressure roller pressure/retraction motor started rotating. • With the pressure roller being pressed, the fusing roller retraction sensor did not turn ON (pressed) even after the encoder pulse sensor counted up the specified number of pulse after the fusing pressure roller pressure/retraction motor started rotating.	B
C3201	Fusing drive motor failure to turn	• The motor lock signal remains HIGH for a predetermined continuous period of time while the motor remains stationary.	B

Code	Item	Description	Rank
C3202	Fusing drive motor turning at abnormal timing	• The motor lock signal remains LOW for a predetermined continuous period of time while the motor remains stationary.	B
C3301	Fusing cooling fan Motor/1's failure to turn	• The fan lock signal remains HIGH for a predetermined continuous period of time while the motor remains stationary.	B
C3302	Fusing cooling fan motor/2's failure to turn	• The fan lock signal remains HIGH for a predetermined continuous period of time while the motor remains stationary.	B
C3451	Heat. heater trouble	• The heating roller thermistor/1 (TH1) fails to raise a given degree of temperature even after the lapse of a given period of time after the Heating roller heater lamp/1 (H1) is turned ON. • When the warm up started and the highest temperature and the lowest temperature of the heating roller thermistor/1 (TH1) are compared for the specified period of time, the difference of these two is either lower than the specified value or at the specified value or over. • During the warm up, if the counted value for zero cross signal input is not modified for the specified period of time, the zero cross signal error will be counted. This malfunction will be detected when the counted value exceeds the specified value.	A
C3452	Press. heater trouble	• When the warm up started, if the temperature detected by the fusing pressure roller thermistor/1 (TH2) is at the specified value or under, and lower than the temperature detected by the heating roller thermistor/1 (HT1) for a specified degree, the highest temperature and the lowest temperature detected by the fusing pressure roller thermistor/1 (TH2) are compared for the specified period of time. The malfunction will be detected if the temperature difference is either lower than specified or at the specified value or over. • Voltage for the fusing pressure roller heater lamp (H3) at the time of stand-by after the warm up will be measured to be set as the reference value. After the temperature adjustment for the fusing pressure roller, if the temperature detected by the fusing pressure roller thermistor/1 (TH2) is lower than the specified, the voltage will be measured again to be compared with the reference value. The malfunction will be detected when the difference between the reference value and the measured value is at the specified value or over for the specified period of time.	A
C3461	New fusing unit new article release	• A new installation is not detected when a new fusing Unit is installed.	B
C3751	Abnormal high temp. (heater)	• The temperatures of the heating roller thermistor/1 (TH1) is higher than a given level of degree for 1 second or more uninterruptedly. • The heater relay is OFF.	A

Code	Item	Description	Rank
C3752	Abnormal high temp. (press)	• The temperature of the fusing pressure roller thermistor/1 (TH2) is higher than a given level of degree for 1 second or more uninterruptedly before the Heater temperature control starts. • The temperature of the fusing pressure roller thermistor/1 (TH2) is higher than a given level of degree for 1 second or more uninterruptedly after the heater temperature control starts.	A
C3851	Abnormal low temp. (Heater)	• The temperature of the heating roller thermistor/1 (TH1) is lower than a given level of degree for 1 second or more uninterruptedly during ready mode, low power mode or printing. • With the normal fusing temperature control, if the counting value for the zero cross signal input was not modified for the specified period of time, the counting will be performed for the zero cross signal error detection. The malfunction will be detected when the counted error value is over the specified value.	A
C3852	Abnormal low temp. (press)	• The temperature of the fusing pressure roller thermistor /1 (TH2) is lower than a given level of degree for 1 second or more uninterruptedly during ready mode, low power mode or printing.	A
C4151	Polygon motor/C failure to turn	• The polygon motor fails to turn stably even after the lapse of a given period of time after activating the polygon motor. • Motor lock signal detects HIGH for a given period time consecutively during the polygon motor is rotating.	B
C4152	Polygon motor/M failure to turn		B
C4153	Polygon motor/Y failure to turn		B
C4154	Polygon motor/K failure to turn		B
C4551	Laser malfunction (cyan)	• SOS signal is not detected even after the lapse of a given period of time after staring the laser output. • SOS signal is not detected for a given period of time during printing or IDC sensor adjustment.	B
C4552	Laser malfunction (magenta)		B
C4553	Laser malfunction (yellow)		B
C4554	Laser malfunction (black)		B
C4705	Image output time out	• No image data is output from the printer control board (PRCB).	C
C4761	Compression hardware timeout	• The hardware involved with the compression function offered by the printer control board (PRCB) does not respond.	C
C4765	Extraction hardware timeout	• The hardware involved with the extraction function offered by the printer control board (PRCB) does not respond.	C

Code	Item	Description	Rank
C4770	JBIG0 error	• The printer control board (PRCB) is faulty.	C
C4771	JBIG1 error		C
C4772	JBIG2 error		C
C4773	JBIG3 error		C
C4780	Compressor 0 command buffer stop failure		C
C4781	Compressor 1 command buffer stop failure		C
C4782	Compressor 2 command buffer stop failure		C
C4783	Compressor 3 command buffer stop failure		C
C5102	Main motor's failure to turn	• The motor lock signal remains HIGH for a predetermined continuous period of time while the motor is turning.	B
C5103	Main motor turning at abnormal timing	• The motor lock signal remains LOW for a predetermined continuous period of time while the motor remains stationary.	B
C5351	Power supply cooling fan motor/1's failure to turn	• The fan lock signal remains HIGH for a predetermined continuous period of time while the motor remains stationary.	B
C5353	Cooling fan motor 2's failure to turn	• The fan lock signal remains HIGH for a predetermined continuous period of time while the motor remains stationary.	B
C5354	Ozone ventilation fan motor's failure to turn	• The fan Lock signal remains HIGH for a predetermined continuous period of time while the motor remains stationary.	B
C5355	Cooling fan motor 3's failure to turn	• The fan lock signal remains HIGH for a predetermined continuous period of time while the motor remains stationary.	B
C5357	Cooling fan motor/1's failure to turn	• The fan lock signal remains HIGH for a predetermined continuous period of time while the motor remains stationary.	B
C5358	Power supply cooling fan motor/2's failure to turn	• The fan lock signal remains HIGH for a predetermined continuous period of time while the motor remains stationary.	B
C6102	Drive home sensor malfunction	• The scanner home sensor is unable to detect the scanner located at its home position. • The scanner home sensor is unable to detect a scanner even when the scanner motor has been driven to move the scanner over the maximum travelling distance. • The scanner home sensor detects the scanner when the scanner has moved 5 mm from the position, at which it blocks the scanner Home Sensor.	B

Code	Item	Description	Rank
C6103	Slider over run	• The scanner home sensor detects the scanner at its home position during a period of time that begins with the time when a prescan command and a scan preparation command are executed and ends when a home return command is executed.	B
C6301	Scanner cooling fan motor's failure to turn	• The fan lock signal remains HIGH for a predetermined continuous period of time while the motor remains stationary.	B
C6302	Exposure lamp cooling fan motor's failure to turn	• The fan lock signal remains HIGH for a predetermined continuous period of time while the motor remains stationary.	B
C6704	Image input time out	• Image data is not input from the image processing board (IPB) to the printer control board (PRCB).	C
C6751	CCD clamp/gain adjustment failure	• The adjustment value is 0 or 255 during a CCD clamp adjustment. • The peak value of the output data is 64 or less during a CCD gain adjustment.	B
C8101	Pressure/retraction mechanism failure before image reading	See DF-608 Service Manual. See P.56	B
C8102	Pressure/retraction mechanism failure at the turnover section		B
C8103	Lift up mechanism failure		B
C8104	Original glass travel failure		B
C8105	Original feeding interval failure		B
C8302	Cooling fan failure		B
C9401	Exposure lamp's failure to turn ON	• The output from the CCD sensor is a predetermined value or less during CCD sensor gain adjustment.	A
C9402	Exposure lamp turning ON at abnormal timing	• The average output value of the CCD sensor with the scanner at its standby position is a predetermined value or more at the end of a scan job.	A
CA051	Standard controller configuration failure	• The controller of the printer control board (PRCB) is faulty.	C
CA052	Controller hardware error	• A controller hardware error is detected in the network I/F.	C
CA053	Controller start failure	• A controller start failure is detected in the controller interface.	C
CB001	FAX board error 1	See FK-502 Service Manual.	C
CB002	FAX board error 2		C
CB003	FAX board error 3		C
CB051	FAX board mount failure line 1		C
CB052	FAX board mount failure line 2		C
CB110	FAX driver error: Instance generation error or observer registration error		C
CB111	FAX driver error: Configuration space initialization NG		C

Code	Item	Description	Rank
CB112	FAX driver error: Semaphore acquisition, release error	See FK-502 Service Manual.	C
CB113	FAX driver error: Sequence error among main body tasks		C
CB114	FAX driver error: Message queue control error		C
CB115	FAX driver error: Main body - sequence error among FAX boards		C
CB116	FAX driver error: FAX board nonresponse (Nonresponse after initialization)		C
CB117	FAX driver error: ACK waiting timeout error		C
CB118	FAX driver error: Receiving undefined frame		C
CB119	FAX driver error: DMA transfer error		C
CB120	JC soft error		C
CB122	Device error (GA LOCAL SRAM)		C
CB123	Device error (DRAM)		C
CB125	Device error (GA)		C
CB126	Timeout error due to nonresponse from DC during suspension process		C
CB127	Timeout error due to nonresponse from CC during suspension process		C
CB128	Timeout error due to nonresponse from LINE during suspension process		C
CB129	Timeout error due to nonresponse from file system/file driver during suspension process		C
CB130	MIF driver error: Driver soft error		C
CB131	MIF driver error: Reception frame length error from main		C
CB132	MIF driver error: Reception frame header error from main		C
CB133	MIF driver error: 232C i/f sequence error		C
CB134	MIF driver error: DPRAM i/f sequence error		C
CB135	MIF driver error: DPRAM CTL/ STL register error		C
CB136	MIF driver error: AKC waiting timeout		C

Code	Item	Description	Rank
CB137	MIF driver error: DPRAM RESET reception	See FK-502 Service Manual.	C
CB140	MSG I/F Error with JC		C
CB141	I/F error with main: I/F error with driver		C
CB142	I/F error with main: Undefined command reception		C
CB143	I/F error with main: Command frame length error		C
CB144	I/F error with main: Command parameter length error		C
CB145	I/F error with main: Undefined parameter		C
CB146	I/F error with main: Command/ response sequence error		C
CB150	Line control: External class instance acquisition error		C
CB151	Line control: Job start error (Starting job parameter error/ child job generation error)		C
CB152	Line control: Doc access error (Report buf access error)		C
CB153	Line control: Response wait timeout from external task		C
CB154	Line control: Internal que table control error (create/enque/ deque)		C
CB160	1 destination control: Instance generation error		C
CB161	1 destination control: Timeout error		C
CB162	1 destination control: Interface error		C
CB163	1 destination control: Message que control error		C
CB164	1 destination control: Semaphore acquisition release error		C
CB165	1 destination control: Observer registration error		C
CB166	1 destination control: Reception resource check error		C
CB167	1 destination control: Deployment error of sending image information		C
CB168	1 destination control: Serialization error of receiving image		C
CB169	1 destination control: Access error to quick memory data		C

Code	Item	Description	Rank
CB170	Page control: Internal que table control error (create/enque/deque)	See FK-502 Service Manual.	C
CB171	Page control: Instance generation error		C
CB172	Page control: Timeout error		C
CB173	Page control: Interface error		C
CB174	Page control: Semaphore acquisition release error		C
CB175	Page control: Observer registration error		C
CB176	Page control: Unable to check TTI domain		C
CB177	Page control: Error return from TTI rasterizer		C
CB178	Page control: Receiving job generation error		C
CB185	Page control: Receiving data size logic error (Receiving data are not multiples of dotline)		C
CB186	Page control: Image buf acquisition (alloc) error		C
CB187	Page control: Error return from compressor		C
CB188	Page control: BandBuf control error (newInstance/get/free)		C
CC001	Vendor connection failure	• It is detected that communications with the vendor are interrupted for a given period of time or more with “Installed” selected for the setting of vendor installation.	C
CC151	ROM contents error upon startup (MSC)	• A fault is detected in a sequence of ROM contents check of the MSC (PRCB) during starting	C
CC152	ROM contents error upon startup (scanner)	• A fault is detected in a sequence of ROM contents check of the IPB during starting.	C
CC153	ROM contents error upon startup (PRT)	• A fault is detected in a sequence of ROM contents check of the mechanical control board (MFPB) during starting.	C
CC154	ROM contents error upon startup (PH)	• A fault is detected in a sequence of ROM contents check of the PH interface board (PHICB) during starting.	C
CC155	Finisher ROM error	See FS-514 Service Manual. See P.65	C
CC156	ADF ROM error	See DF-608 Service Manual. See P.56	C
CC163	ROM contents error (PRT)	• The wrong model of firmware is detected in the engine during the initial connection to the engine is being checked.	C

	Code	Item	Description	Rank
1	CD001	Hard disk initialization abnormality	• Abnormality of saved data (document information) is detected at data check in hard disk during starting.	C
	CD002	JOB RAM save error	• The error in save of JOB data to the memory/hard disk and its read error are detected.	C
	CD004	Hard disk access error	• Unable to communicate between the hard disk and printer control board (PRCB).	C
	CD005	Hard disk error 1	• Hard disk is faulty.	C
	CD006	Hard disk error 2		C
	CD007	Hard disk error 3		C
	CD008	Hard disk error 4		C
	CD009	Hard disk error 5		C
	CD00A	Hard disk error 6		C
	CD00B	Hard disk error 7		C
	CD00C	Hard disk error 8		C
	CD00D	Hard disk error 9		C
	CD00E	Hard disk error A		C
	CD00F	Hard disk data transfer error	• Data transfer from the hard disk is faulty.	C
	CD010	Hard disk unformat	• Unformatted hard disk is connected.	C
	CD011	Hard disk specifications error	• A hard disk that falls outside the specifications is connected.	C
	CD020	Hard disk verify error	• The data abnormality is detected by the HDD verify check.	C
1	CD201	File memory mounting error	• The file memory is not mounted. • The file has any abnormality.	C
1	CD202	Memory capacity discrepancy	• File memory capacity on the Printer control board (PRCB) is not enough. • File memory capacity necessary for duplex printing is not enough during Duplex unit mounting.	C
1	CD203	Memory capacity discrepancy 2	• File memory capacity on the Printer control board (PRCB) is not enough.	C
1	CD204	Expanded memory unit not mounted at JScribe able	• The optional expanded memory unit is not mounted when Jscribe is set able at Service Mode.	C
1	CD211	PCI-SDRAM DMA operation failure	• Hardware related to the transfer of memory image of the Printer control board (PRCB) fails to respond.	C
1	CD212	Compression/extraction timeout detection	• Hardware related to the BTC compression function of the Printer control board (PRCB) fails to respond.	C
	CD22#	Trouble related to security	• Contact the responsible people of KONICA MINOTLTA before taking some countermeasures.	-
1	CD231	No Fax memory at FAX board mounting	• The DIMM for FAX is not mounted during the FAX board is mounting. • The FAX board is not mounted when the FAX board mounting is set ON at Service Mode.	C
1	CD241	Encryption board setting error	• Initialization error of the encrypted ASIC is detected during the machine is starting.	C

	Code	Item	Description	Rank
⚠1	CD242	Encryption board mounting error	• The faulty of the installation of encrypted ASIC is detected during the machine is starting.	C
⚠1	CD251	No JPEG board mounting at JPEG board mount setting	• JPEG board (Scan Accelerator Kit) is not mounted when the JPEG board mounting is set ON at Service Mode.	C
	CD3##	NVRAM data error	• Abnormality is detected by the abnormal check of each NVRAM data.	-
⚠1	CD370	NVRAM data multiple errors	• Multiple errors (Over 5) are detected by the abnormal check of each NVRAM data.	-
	CDC##	Trouble related to security	• Contact the responsible people of KONIKA MINOTLTA before taking some countermeasures.	-
	CE001	Abnormal message queue	• Printer control board (PRCB) is faulty.	C
	CE002	Message and method parameter failure		C
	CE003	Task error		C
	CE004	Event error		C
	CE005	Memory access error		C
	CE006	Header access error		C
	CE007	DIMM initialize error		C
	CEEE1	MSC undefined malfunction occurring	• An undefined malfunction occurs in the MSC of the printer control board (PRCB).	C
	CEEE2	Scanner section undefined malfunction	• An undefined malfunction occurs in the scanner section.	C
	CEEE3	Engine section undefined malfunction	• An undefined malfunction occurs in the engine section (MFPB, etc.).	C

- The machine displays an abort code (CF###) on the control panel as it becomes unable to process tasks properly through its software control.
- When the system program is aborted, check the electrical component, unit, option, and connection relating to the specific type of the abort condition.

Code	Item		Relevant electrical components, units, and options	Rank
CF001	CT_singleList table abnormal	An exceptional instance occurred due to the unexpected Parameter in the System F/W.	• Printer control board (PRCB)	C
CF002	CT_doubleList table abnormal			C
CF003	CT_doubleList table abnormal			C
CF004	CT_queue full abnormal			C
CF011	Array link abnormal			C
CF012	FAT link abnormal			C
CF013	File size abnormal			C
CF021	setDelayMessage Table OverFlow			C
CF022	procSetBootParamTcpipAddress() injustice			C
CF023	MsgQue OverFlow			C
CF031	getJobPageToIPE() page number injustice			C
CF032	getJobHDDPageToIPE() page number injustice			C
CF033	setDivTbl() limitation over			C
CF034	HDDQUEUE Over Flow			C
CF041	getAPPPtrFromAPPID() abnormal			C
CF042	getAPPIndexFromAPPID() abnormal			C
CF051	CC_InputPageEntry:operator[] page injustice			C
CF061	IdeCommand_Set() status abnormal			C
CF062	IdeCommand_Set() parameter abnormal			C
CF091	PCI ASIC1 ERROR	ASIC1 error		C
CF092	PCI ASIC2 ERROR	ASIC2 error		C
CF093	PCI ASIC4 ERROR	ASIC3 error		C
CF101	SCAN TIME OUT	Image transfer malfunctions		C
CF111	Compress TIME OUT	Compression malfunctions		C
CF112	Compress table OverFlow			C
CF113	Compress table check	Compression malfunctions		C
CF121	Expand TIME OUT			C
CF122	Expand table OverFlow			C
CF123	Expand expandLine abnormal			C

Code	Item		Relevant electrical components, units, and options	Rank
CF131	Print TIME OUT	Image transfer malfunctions	• Printer control board (PRCB)	C
CF201	startIRReadAnd Compress()Sequence	An exceptional instance occurred due to the unexpected parameter in the system F/W.		C
CF202	startWorkSave()Sequence abnormal			C
CF203	convAPItoIJCParameter()page abnormal			C
CF204	calcCompresserUse()CmpExpID Abnormal			C
CF211	setParameterBandColorPlane() Table OverFlow			C
CF212	convAPItoIJCParameter()page abnormal			C
CF213	calcExpandUse() CmpExpID abnormal			C
CF221	startPrintOutput outputsize zero			C
CF222	Next request comes during processing of startPrintOutput ()			C
CF223	Next request comes during processing of startWorkLoad-Output ()			C
CF300	IR Bus Check Timeout	Image transfer error on IR input bus		C
CF411	Parity error	Communication error (between IR-Systems)		C
CF421	Overrun error			C
CF431	Parity error + Overrun error			C
CF441	Framing error			C
CF451	Parity error + Framing error			C
CF461	Overrun error + Framing error			C
CF471	Parity error + Overrun error + Framing error			C
CF412	Parity error			C
CF422	Overrun error			C
CF432	Parity error + Overrun error			C
CF442	Framing error			C
CF452	Parity error + Framing error			C
CF462	Overrun error + Framing error			C
CF472	Parity error + Overrun error + Framing error			C
CF510	Parity error			C

Code	Item		Relevant electrical components, units, and options	Rank
CF520	Framing error	Communication error (IR detected)	• Printer control board (PRCB)	C
CF530	Parity error + Framing error			C
CF540	Overrun error			C
CF550	Parity error + Overrun error			C
CF560	Overrun error + Framing error			C
CF570	Parity error + Overrun error + Framing error			C
CF580	Frame distortion of ADF			C
CF600	Report receiving of print start that is out of sequence		• Printer control board (PRCB)/Engine	C
CF601	Report receiving of paper feeding that is out of sequence			C
CF604	Outside IF/Command queue		• Printer control board (PRCB)	C
CF614	“Output sequence” queue	An exceptional instance occurred due to the unexpected parameter in the system F/W.		C
CF624	Panel LCD date queue			C
CF704	Common data “Delete-waiting HDD accumulated job ID” queue			C
CF714	IRC/Command queue			C
CF724	Engine/Command queue		• Printer control board (PRCB)/Engine	C
CF734	Panel/Command queue		• Printer control board (PRCB)/Control Panel	C
CF744	File memory transfer start-waiting command queue		• Printer control board (PRCB)	C
CF754	File memory compression requesting command queue			C
CF764	Panel instruction delete job queue			C
CF774	Warning delete job queue			C
CF784	Application instruction delete job queue			C
CF794	Output page information for duplex back side queue			C
CF7A4	Paper feed completion output pate information queue			C
CF7B4	Exposure compaction output page information queue			C
CF7C4	Pre-discharge completion output page information queue			C
CF7D4	Touch panel coordinate data queue	An exceptional instance occurred due to the unexpected parameter in the system F/W.		C
CF7E4	Direct key data queue			C
CF7F4	Scan sequence queue			C

Code	Item		Relevant electrical components, units, and options	Rank
CF802	SIO sending port...ENG		• Printer control board (PRCB)/Engine	C
CF806	SIO sending port...IRC		• Printer control board (PRCB)	C
CF807	SIO sending port...ADF			C
CF812	SIO sending port...Fiery			C
CF815	SIO sending port...PIC/PIC terminal			C
CF8ED	SIO sending port...EPNet			C
CF902	SIO receiving port...ENG		• Printer control board (PRCB)/Engine	C
CF906	SIO receiving port...IRC		• Printer control board (PRCB)	C
CF912	SIO receiving port...Fiery			C
CF915	SIO receiving port...PIC/PIC terminal			C
CF9ED	SIO receiving port...EPNet			C
CFA01	getOneImgTransInfoFromTh() No applied thread	An exceptional instance occurred due to the unexpected parameter in the system F/W.		C
CFA02	chkEnableAllocExec() default error			C
CFA03	setTransBandAndRepeatNum() error			C
CFA04	Application ID error			C
CFA05	Thread selection image processing mode error			C
CFA06	getOneImgIndexNumFromTh() No applied thread			C
CFA07	setBufBandFromOut() No applied thread			C
CFA08	chkStartOutput() No applied thread			C
CFA09	rptReleaseMemResultACS() No applied thread			C
CFA10	rptEndBandTrans() No applied thread			C
CFA11	cancelTransExec() No applied thread			C
CFA12	CC_ImgTransInfo:allocTransIndex			C
CFA13	CC_MultiThreadProfile:rptBuf2MemClrEnd			C
CFA21	Outside image input start			C
CFA22	Inside image outside output start			C

Code	Item		Relevant electrical components, units, and options	Rank
CFA23	Engine input start	An exceptional instance occurred due to the unexpected parameter in the system F/W.	• Printer control board (PRCB)	C
CFA24	Buffer memory → File memory transfer start			C
CFA25	BTC compression/CMM start			C
CFA26	Inside image PCIBridegDMA input/output start			C
CFA27	File memory → Buffer memory transfer start			C
CFA28	BTC extension start	An exceptional instance occurred due to the unexpected parameter in the system F/W.		C
CFA29	JPEG compression start			C
CFA30	JPEG extension start			C
CFA31	Software resolution conversion start			C
CFA32	Hardware resolution conversion start			C
CFA33	Software rotating processing start			C
CFA34	Other Sequence malfunction			C
CFA35	Buffer Array malfunction			C
CFA36	Thread Service malfunction			C
CFA37	Input image height 0			C
CFA38	Output image width 0			C
CFA41	pcbuf_exinput.cpp,h			C
CFA42	pcbuf_inout.cpp,h			C
CFA43	pcbuf_exoutput.cpp,h			C
CFA61	DMA A			C
CFA62	DMA B			C
CFA63	DMA C			C
CFA64	DMA D			C
CFA65	DMA E			C
CFA66	DMA F			C
CFA67	DMA G			C
CFA68	DMA H			C
CFA69	DMA I			C
CFA70	DMA J			C
CFA71	Interruption			C
CFA72	Common register setting			C
CFA73	PCIBridgeDMA			C
CFA74	BTC compression/Extension device			C
CFA75	CMM			C

Code	Item		Relevant electrical components, units, and options	Rank
CFB52	DMA_A error interruption	Error concerning data transmission bus or hardware (IR input system)	• Printer control board (PRCB)	C
CFB53	DMA_B error interruption	Error concerning data transmission bus or hardware (inside the board)		C
CFB54	DMA_C error interruption			C
CFB55	DMA_D 0 error interruption	Error concerning data transmission bus or hardware (Engine output system)	• Printer control board (PRCB)/Engine	C
CFB56	DMA_D 1 error interruption			C
CFB57	DMA_D 2 error interruption	Error concerning data transmission bus or hardware (inside the board)		C
CFB58	DMA_D 3 error interruption			C
CFB59	DMA_E error interruption	An exceptional instance occurred due to the unexpected parameter in the system F/W.	• Printer control board (PRCB)	C
CFB5A	DMA_F error interruption			C
CFB5B	DMA_G error interruption			C
CFB5C	DMA_H error interruption			C
CFB5D	DMA_I error interruption			C
CFB5E	DMA_J error interruption		• Printer control board (PRCB)/Engine	C
CFB5F	Watch dog timer error interruption		• Printer control board (PRCB)	C
CFB60	PCI slave error interruption		• Printer control board (PRCB)/FAX Board/Local I/F Board	C
CFB61	Local bus error interruption	An exceptional instance occurred due to the unexpected parameter in the system F/W.	• Printer control board (PRCB)	C
CFB6E	Underrun at DMA_D 0 image output interface 1	Error concerning data transmission bus or hardware (Engine output system)		C
CFB6F	Underrun at DMA_D 1 image output interface 1			C
CFB70	Underrun at DMA_D 2 image output interface 1			C
CFB71	Underrun at DMA_D 3 image output interface 1			C

Code	Item		Relevant electrical components, units, and options	Rank
CFB72	Underrun at DMA_G image output interface 1	An exceptional instance occurred due to the unexpected parameter in the system F/W.	• Printer control board (PRCB)	C
CFB73	Overflow at DMA_A/B image output interface 1			C
CFB74	Underrun at DMA_F ASIC 1 image output interface			C
CFB75	Overflow at DMA_C ASIC 1 image input interface			C
CFB76	Target abort	PCI bus connection device error	• Printer control board (PRCB)	C
CFB77	Master abort			C
CFB78	Forced stoppage			C
CFB79	Retry error detection of PCI master			C
CFB7A	Master read data parity error			C
CFB7B	Master write data parity error			C
CFB7C	System error			C
CFB7D	Slave read data parity error			C
CFB7E	Slave write data parity error			C
CFB7F	Address parity error			C
CFB80	DMA-M error interruption			C
CFB81	DMA-N0 error interruption			C
CFB82	DMA-N1 error interruption			C
CFB83	DMA-N2 error interruption			C
CFB84	DMA-N3 error interruption			C
CFBA4	JpegASIC Error interruption DMA_A error occurred.		• Printer control board (PRCB)/ JPEG board	C
CFBA5	JpegASIC error interruption DMA_C error occurred.			C
CFBA6	JpegASIC error interruption DMA_D error occurred.			C
CFBA7	JpegASIC error interruption Watch dog timer error occurred.			C
CFBA8	JpegASIC error interruption PCI slave detected an error.			C
CFBAF	JpegASIC error interruption JPEG system interruption occurred during inner process mode with DMA_A. Error interruption			C
CFBB2	JpegASIC error interruption JPEG system interruption occurred in more than one status during inner process mode with DMA_A.			C
CFBB3	JpegASIC error interruption EOI is not detected even after the set volume of data is transferred during extension with DMA_A.			C

Code	Item		Relevant electrical components, units, and options	Rank
CFBB4	JpegASIC error interruption Compressed data exceeded the set value during compression with DMA_A.		• Printer control board (PRCB)/ JPEG board	C
CFBB5	JpegASIC error interruption EOI is not detected even after the set volume of data is transferred during compression with DMA_A.			C
CFBB6	JpegASIC error interruption Target abort occurred.			C
CFBB7	JpegASIC error interruption Master abort occurred.			C
CFBB8	JpegASIC error interruption Forced outage occurred.			C
CFBB9	JpegASIC error interruption PCI master detected the retrial error.			C
CFBBA	JpegASIC error interruption Master read data parity error occurred.			C
CFBBB	JpegASIC error interruption Master write data parity error occurred.			C
CFBBC	JpegASIC error interruption System error occurred.			C
CFBBD	JpegASIC error interruption Slave read data parity error occurred.			C
CFBBE	JpegASIC error interruption Slave write data parity error occurred.			C
CFBBF	JpegASIC error interruption Address parity error occurred.			C
CFC01	Color Number faulty	An exceptional instance occurred due to the unexpected parameter in the system F/W.	• Printer control board (PRCB)	C
CFC02	Thread Sequence malfunction			C
CFC03	Thread Service Sequence malfunction			C
CFC04	Thread Message Q malfunction			C
CFC12	Output of output buffer 2 surpasses clear.			C
CFC13	Image transfer control information acquisition malfunction			C
CFD00	ASIC10 timeout number of DMA under operation and transfer completion line=0: DMA_A0			C
CFD01	ASIC10 timeout number of DMA under operation and transfer completion line=0: DMA_A1			C
CFD02	ASIC10 timeout number of DMA under operation and transfer completion line=0: DMA_A2			C
CFD03	ASIC10 timeout number of DMA under operation and transfer completion line=0: DMA_B0			C
CFD04	ASIC10 timeout number of DMA under operation and transfer completion line=0: DMA_B1			C

Code	Item	Relevant electrical components, units, and options	Rank
CFD05	ASIC10 Timeout number of DMA under operation and transfer completion line=0: DMA_B2	• Printer control board (PRCB)	C
CFD06	ASIC10 Timeout number of DMA under operation and transfer completion line=0: DMA_C		C
CFD07	ASIC10 Timeout number of DMA under operation and transfer completion line=0: DMA_D		C
CFD08	ASIC10 Timeout number of DMA under operation and transfer completion line=0: DMA_E		C
CFD09	ASIC10 Timeout number of DMA under operation and transfer completion line=0: DMA_F		C
CFD0A	ASIC10 Timeout number of DMA under operation and transfer completion line=0: DMA_G		C
CFD0B	ASIC10 Timeout number of DMA under operation and transfer completion line=0: DMA_H0		C
CFD0C	ASIC10 Timeout number of DMA under operation and transfer completion line=0: DMA_H1		C
CFD0D	ASIC10 Timeout number of DMA under operation and transfer completion line=0: DMA_H2		C
CFD0E	ASIC10 Timeout number of DMA under operation and transfer completion line=0: DMA-I		C
CFD0F	ASIC10 Timeout number of DMA under operation and transfer completion line=0: DMA-J		C
CFD10	ASIC10 timeout number of DMA under operation and transfer completion line=0: DMA PCI Bridge		C
CFD11	ASIC10 Timeout number of DMA under operation and transfer completion line=0: DMA 19 ASIC1		C
CFD12	ASIC10 timeout number of DMA under operation and transfer completion line=0: DMA JPEG		C
CFD13	ASIC10 timeout number of DMA under operation and transfer completion line=0: DMA NO		C
CFD15	ASIC10 timeout number of DMA under operation and transfer completion line=0: DMA-N		C
CFE00	ASIC10 timeout number of DMA under operation and transfer completion line=0: DMA_A0		C
CFE01	ASIC10 timeout number of DMA under operation and transfer completion line≠0: DMA_A1		C
CFE02	ASIC10 timeout number of DMA under operation and transfer completion line≠0: DMA_A2		C
CFE03	ASIC10 timeout number of DMA under operation and transfer completion line≠0: DMA_B0		C
CFE04	ASIC10 timeout number of DMA under operation and transfer completion line≠0: DMA_B1		C
CFE05	ASIC10 timeout number of DMA under operation and transfer completion line≠0: DMA_B2		C
CFE06	ASIC10 timeout number of DMA under operation and transfer completion line≠0: DMA_C		C

Code	Item	Relevant electrical components, units, and options	Rank
CFE07	ASIC10 timeout number of DMA under operation and transfer completion line≠0: DMA_D	• Printer control board (PRCB)	C
CFE08	ASIC10 timeout number of DMA under operation and transfer completion line≠0: DMA_E		C
CFE09	ASIC10 timeout number of DMA under operation and transfer completion line≠0: DMA_F		C
CFE0A	ASIC10 timeout number of DMA under operation and transfer completion line≠0: DMA_G		C
CFE0B	ASIC10 timeout number of DMA under operation and transfer completion line≠0: DMA_H0		C
CFE0C	ASIC10 timeout number of DMA under operation and transfer completion line≠0: DMA_H1		C
CFE0D	ASIC10 timeout number of DMA under operation and transfer completion line≠0: DMA_H2		C
CFE0E	ASIC10 timeout number of DMA under operation and transfer completion line≠0: DMA-I		C
CFE0F	ASIC10 timeout number of DMA under operation and transfer completion line≠0: DMA-J	• Printer control board (PRCB)/Engine	C
CFE10	ASIC10 timeout number of DMA under operation and transfer completion line≠0: DMAPCI bridge	• Printer control board (PRCB)	C
CFE11	ASIC10 timeout number of DMA under operation and transfer completion line≠0: DMA19 ASIC1		C
CFE12	ASIC10 timeout number of DMA under operation and transfer completion line≠0: DMA JPEG		C
CFE13	ASIC10 timeout number of DMA under operation and transfer completion line≠0: DMA NO		C
CFE15	ASIC10 timeout number of DMA under operation and transfer completion line=0: DMA-N		C
CFF00	ASIC10 timeout waiting state of DMA band preparation register setting:DMA_A0		C
CFF01	ASIC10 timeout waiting state of DMA band preparation register setting:DMA_A1		C
CFF02	ASIC10 timeout waiting state of DMA band preparation register setting:DMA_A2		C
CFF03	ASIC10 timeout waiting state of DMA band preparation register setting:DMA_B0		C
CFF04	ASIC10 timeout waiting state of DMA band preparation register setting:DMA_B1		C
CFF05	ASIC10 timeout waiting state of DMA band preparation register setting:DMA_B2		C
CFF06	ASIC10 timeout waiting state of DMA band preparation register setting:DMA_C		C
CFF07	ASIC10 timeout waiting state of DMA band preparation register setting:DMA_D		C
CFF08	ASIC10 timeout waiting state of DMA band preparation register setting:DMA_E		C

Code	Item	Relevant electrical components, units, and options	Rank
CFF09	ASIC10 timeout waiting state of DMA band preparation register setting:DMA_F	• Printer control board (PRCB)	C
CFF0A	ASIC10 timeout waiting state of DMA band preparation register setting:DMA_G		C
CFF0B	ASIC10 timeout waiting state of DMA band preparation register setting:DMA_H0		C
CFF0C	ASIC10 timeout waiting state of DMA band preparation register setting:DMA_H1		C
CFF0D	ASIC10 timeout waiting state of DMA band preparation register setting:DMA_H2		C
CFF0E	ASIC10 timeout waiting state of DMA band preparation register setting:DMA-I		C
CFF0F	ASIC10 timeout waiting state of DMA band preparation register setting:DMA-J		C
CFF10	ASIC10 timeout waiting state of DMA band preparation register setting:DMA PCI bridge		C
CFF11	ASIC10 timeout waiting state of DMA band preparation register setting:DMA 19 ASIC1		C
CFF12	ASIC10 timeout waiting state of DMA band preparation register setting:DMA JPEG		C
CFF13	ASIC10 timeout waiting state of DMA band preparation register setting:DMA NO		C
CFF15	ASIC10 timeout waiting state of DMA band preparation register setting: DMA-N		C

16.4 How to reset

- Different malfunction resetting procedures apply depending on the rank of the trouble code.

* List of malfunction resetting procedures

Trouble code rank	Resetting procedures
Rank A	• Trouble reset For details of Trouble Reset, see Adjustment/Setting. See P.397
Rank B	• Opening/closing the front door
Rank C	• Turning main power switch OFF/ON

16.5 Solution

16.5.1 C0204: Tray 2 elevator failure

Relevant electrical parts	
Tray 2 lift-up sensor (PC7-PC) Tray 2 lift-up motor (M3-PC)	PC control board (PCCB)

Step	Action	WIRING DIAGRAM	
		Control signal	Location (Electrical component)
1	Check the M3-PC connector for proper connection and correct as necessary.	—	—
2	Check the connector of M3-PC for proper drive coupling and correct as necessary.	—	—
3	PC7-PC I/O check, sensor check	PCCB PJ6PCCB-3 (ON)	S-24
4	M3-PC operation check	PCCB PJ4PCCB-4 to 5	M-27
5	Change PCCB	—	—

16.5.2 C0211: Manual tray rise descent error

Relevant electrical parts	
Manual bypass lift-up position sensor (PC14) Main motor (M1)	Mechanical control board (MFPB)

Step	Action	WIRING DIAGRAM	
		Control signal	Location (Electrical component)
1	Check the M1 connector for proper connection and correct as necessary.	—	—
2	Check the connector of M1 for proper drive coupling and correct as necessary.	—	—
3	PC14 I/O check, sensor check	MFPB CNTRY1-10 (ON)	C-9
4	M1 operation check	MFPB CNDM1-5 (REM) MFPB CNDM1-8 (LOCK)	L-2
5	Change MFPB	—	—

16.5.3 C0301: Suction fan motor's failure to turn

Relevant electrical parts	
Mechanical control board (MFPB)	Right door assy

Step	Action	WIRING DIAGRAM	
		Control signal	Location (Electrical component)
1	Check the connector of motor for proper connection and correct as necessary.	—	—
2	Change the right door assy	—	—
3	Change MFPB	—	—

16.5.4 C2151: 2nd image transfer roller separation

Relevant electrical parts	
Mechanical control board (MFPB)	Right door assy

Step	Action	WIRING DIAGRAM	
		Control signal	Location (Electrical component)
1	Check the connector of motor for proper connection and correct as necessary.	—	—
2	Change the right door assy and MFPB	—	—

16.5.5 C2152: Transfer belt separation

Relevant electrical parts	
Transfer belt retraction sensor (PC6) 1st image transfer pressure/retraction clutch (CL3)	Main motor (M1) Mechanical control board (MFPB)

Step	Action	WIRING DIAGRAM	
		Control signal	Location (Electrical component)
1	Check the M1 connector for proper connection and correct as necessary.	—	—
2	PC6 I/O check, sensor check	—	—
3	CL3 operation check	MFPB CNDM1-11 (ON)	L-1
4	M1 operation check	MFPB CNDM1-5 (REM) MFPB CNDM1-8 (LOCK)	L-2
5	Change MFPB	—	—

16.5.6 C2253: Color PC drum motor's failure to turn

Relevant electrical parts	
Color PC drum motor (M2)	Mechanical control board (MFPB)

Step	Action	WIRING DIAGRAM	
		Control signal	Location (Electrical component)
1	Check the connector of motor for proper connection and correct as necessary.	—	—
2	Check the connector of motor for proper drive coupling and correct as necessary.	—	—
3	Check the MFPB connector for proper connection and correct as necessary.	—	—
4	M2 operation check (C0018)	MFPB CNDM3-5 (REM) MFPB CNDM3-8 (LOCK)	C-21
5	Change MFPB	—	—

16.5.7 C2254: Color PC drum motor's turning at abnormal timing

Relevant electrical parts	
Color PC drum motor (M2)	Mechanical control board (MFPB)

Step	Action	WIRING DIAGRAM	
		Control signal	Location (Electrical component)
1	M2 operation check	MFPB CNDM3-5 (REM) MFPB CNDM3-8 (LOCK)	C-21
2	Change MFPB	—	—

16.5.8 C2255: Color developing motor's failure to turn

Relevant electrical parts	
Color developing motor (M3)	DC power supply (DCPU) Mechanical control board (MFPB)

Step	Action	WIRING DIAGRAM	
		Control signal	Location (Electrical component)
1	Check the connector of motor for proper connection and correct as necessary.	—	—
2	Check the connector of motor for proper drive coupling and correct as necessary.	—	—
3	Check the DCPU connector for proper connection and correct as necessary.	—	—
4	Check the MFPB connector for proper connection and correct as necessary.	—	—
5	M3 operation check	MFPB CNDM2-5 (REM) MFPB CNDM2-8 (LOCK)	C-20
6	Change DCPU	—	—
7	Change MFPB	—	—

16.5.9 C2256: Color developing motor's turning at abnormal timing

Relevant electrical parts	
Color developing motor (M3)	DC power supply (DCPU) Mechanical control board (MFPB)

Step	Action	WIRING DIAGRAM	
		Control signal	Location (Electrical component)
1	M3 operation check	MFPB CNDM2-5 (REM) MFPB CNDM2-8 (LOCK)	C-20
2	Change DCPU	—	—
3	Change MFPB	—	—

16.5.10 C2451: Transfer cleaner unit new article release

Relevant electrical parts	
Mechanical control board (MFPB)	

Step	Action	WIRING DIAGRAM	
		Control signal	Location (Electrical component)
1	Reinstall unit	—	—
2	Change MFPB	—	—

16.5.11 C2551: Abnormally low toner density detected cyan TCR sensor

16.5.12 C2553: Abnormally low toner density detected magenta TCR sensor

16.5.13 C2555: Abnormally low toner density detected yellow TCR sensor

Relevant electrical parts	
Imaging unit /C Imaging unit /M Imaging unit /Y Toner supply motor C/K (M6) Toner supply motor Y/M (M7)	Mechanical control board (MFPB) Printer control board (PRCB)

Step	Action	WIRING DIAGRAM	
		Control signal	Location (Electrical component)
1	Perform image troubleshooting procedure if image density is low.	—	—
2	Clean the TCR sensor window on the underside of the imaging unit if dirty	—	—
3	M6, M7 operation check	MFPB CNDM2-10 to 13 (M6) MFPB CNDM3-10 to 13 (M7)	C-20 C-21
4	Reinstall imaging unit	—	—
5	Change imaging unit	—	—
6	Change MFPB	—	—
7	Change PRCB.	—	—

16.5.14 C2552: Abnormally high toner density detected cyan TCR sensor

16.5.15 C2554: Abnormally high toner density detected magenta TCR sensor

16.5.16 C2556: Abnormally high toner density detected yellow TCR sensor

Relevant electrical parts	
Imaging unit /C Imaging unit /M Imaging unit /Y	Mechanical control board (MFPB) Printer control board (PRCB)

Step	Action	WIRING DIAGRAM	
		Control signal	Location (Electrical component)
1	Clean the TCR sensor window on the underside of the imaging unit if dirty	—	—
2	Reinstall imaging unit	—	—
3	Change imaging unit	—	—
4	Change MFPB	—	—
5	Change PRCB	—	—

16.5.17 C2557: Abnormally low toner density detected black TCR sensor

Relevant electrical parts	
Imaging unit /K Toner supply motor C/K (M7)	Mechanical control board (MFPB) Printer control board (PRCB)

Step	Action	WIRING DIAGRAM	
		Control signal	Location (Electrical component)
1	Perform image troubleshooting procedure if image density is low.	—	—
2	Clean the TCR sensor window on the underside of the imaging unit if dirty	—	—
3	M7 operation check	MFPB CNDM3-10 to 13	C-21
4	Reinstall Imaging unit	—	—
5	Change imaging unit /K	—	—
6	Change MFPB	—	—
7	Change PRCB.	—	—

16.5.18 C2558: Abnormally high toner density detected black TCR sensor

Relevant electrical parts	
Imaging unit /K	Mechanical control board (MFPB) Printer control board (PRCB)

Step	Action	WIRING DIAGRAM	
		Control signal	Location (Electrical component)
1	Correct the TCR connection on the underside of the imaging unit if faulty.	—	—
2	Reinstall imaging unit	—	—
3	Change imaging unit	—	—
4	Change MFPB	—	—
5	Change PRCB	—	—

16.5.19 C2559: Cyan TCR sensor adjustment failure

16.5.20 C255A: Magenta TCR sensor adjustment failure

16.5.21 C255B: Yellow TCR sensor adjustment failure

Relevant electrical parts	
Imaging unit /C Imaging unit /M Imaging unit /Y Toner supply motor Y/M (M6) Toner supply motor C/K (M7)	Mechanical control board (MFPB) Printer control board (PRCB)

Step	Action	WIRING DIAGRAM	
		Control signal	Location (Electrical component)
1	Clean the TCR sensor window on the underside of the imaging unit if dirty	—	—
2	M6, M7 operation check	MFPB CNDM2-10 to 13 (M6) MFPB CNDM3-10 to 13 (M7)	C-20 C-21
3	Reinstall imaging unit	—	—
4	Change imaging unit	—	—
5	Change MFPB	—	—
6	Change PRCB	—	—

16.5.22 C255C: Black TCR sensor adjustment failure

Relevant electrical parts	
Imaging unit /K Toner supply motor C/K (M7)	Mechanical control board (MFPB) Printer control board (PRCB)

Step	Action	WIRING DIAGRAM	
		Control signal	Location (Electrical component)
1	Clean or correct each contact of the imaging unit if faulty.	—	—
2	M7 operation check	MFPB CNDM3-10 to 13	C-21
3	Reinstall imaging unit /K	—	—
4	Change imaging unit /K	—	—
5	Change MFPB	—	—
6	Change PRCB	—	—

16.5.23 C2651: Cyan imaging unit EEPROM access error

16.5.24 C2652: Magenta imaging unit EEPROM access error

16.5.25 C2653: Yellow imaging unit EEPROM access error

16.5.26 C2654: Black imaging unit EEPROM access error

Relevant electrical parts	
Imaging unit /C Imaging unit /M Imaging unit /Y Imaging unit /K	Mechanical control board (MFPB)

Step	Action	WIRING DIAGRAM	
		Control signal	Location (Electrical component)
1	Clean the connection between the imaging unit and the machine if dirty	—	—
2	Reinstall imaging unit	—	—
3	Change imaging unit	—	—
4	Change MFPB	—	—

16.5.27 C2A01: Cyan toner cartridge EEPROM access error

16.5.28 C2A02: Yellow toner cartridge EEPROM access error

16.5.29 C2A03: Magenta toner cartridge EEPROM access error

16.5.30 C2A04: Black toner cartridge EEPROM access error

Relevant electrical parts	
Toner cartridge /C Toner cartridge /M Toner cartridge /Y Toner cartridge /K	Mechanical control board (MFPB)

Step	Action	WIRING DIAGRAM	
		Control signal	Location (Electrical component)
1	Clean the connection between the toner cartridge and the machine if dirty	—	—
2	Reinstall toner cartridge	—	—
3	Check the harness for proper connection and correct as necessary.	—	—
4	Change toner cartridge	—	—
5	Change MFPB	—	—

16.5.31 C3101: Fusing pressure roller separation failure

Relevant electrical parts	
Fusing roller retraction sensor (PC23) Fusing pressure roller pressure/retraction motor (M24)	Mechanical control board (MFPB) Fusing unit

Step	Action	WIRING DIAGRAM	
		Control signal	Location (Electrical component)
1	Check the connector of motor for proper connection and correct as necessary.	—	—
2	PC23 I/O check, sensor check	MFPB CNDM4-12 (ON)	K-8
3	PC23 operation check	—	—
4	M24 operation check	MFPB CNDM4-13 to 14	K-8
5	Change fusing unit	—	—
6	Change MFPB	—	—

16.5.32 C3201: Fusing drive motor failure to turn

Relevant electrical parts	
Fusing drive motor (M4)	Mechanical control board (MFPB)

Step	Action	WIRING DIAGRAM	
		Control signal	Location (Electrical component)
1	Check the connector of motor for proper connection and correct as necessary.	—	—
2	Check the loading status of the fusing unit drive, and correct the error as necessary.	—	—
3	Check the fusing unit, MFPB for proper connection and correct or change as necessary.	—	—
4	M2 operation check	MFPB CNDM4-5 (REM) MFPB CNDM4-8 (LOCK)	K-7
5	Change MFPB	—	—

16.5.33 C3202: Fusing drive motor turning at abnormal timing

Relevant electrical parts	
Fusing drive motor (M4)	Mechanical control board (MFPB)

Step	Action	WIRING DIAGRAM	
		Control signal	Location (Electrical component)
1	M4 operation check	MFPB CNDM4-5 (REM) MFPB CNDM4-8 (LOCK)	K-7
2	Change MFPB	—	—

16.5.34 C3301: Fusing cooling fan motor /1's failure to turn

Relevant electrical parts	
Fusing cooling fan motor/1 (M11)	Mechanical control board (MFPB)

Step	Action	WIRING DIAGRAM	
		Control signal	Location (Electrical component)
1	Check the connector of motor for proper connection and correct as necessary.	—	—
2	Check the fan for possible overload and correct as necessary.	—	—
3	M11 operation check	MFPB CNDM1-12 (ON) MFPB CNDM1-14 (LOCK)	L-1
4	Change MFPB	—	—

16.5.35 C3302: Fusing cooling fan motor /2's failure to turn

Relevant electrical parts	
Fusing cooling fan motor/2 (M13)	Mechanical control board (MFPB)

Step	Action	WIRING DIAGRAM	
		Control signal	Location (Electrical component)
1	Check the connector of motor for proper connection and correct as necessary.	—	—
2	Check the fan for possible overload and correct as necessary.	—	—
3	M13 operation check	MFPB CNR2FAN-10 (ON) MFPB CNR2FAN-12 (LOCK)	L-3
4	Change MFPB	—	—

16.5.36 C3451: Heat. heater trouble

16.5.37 C3452: Press. heater trouble

16.5.38 C3751: Abnormal high temp. (heater)

16.5.39 C3752: Abnormal high temp. (press)

16.5.40 C3851: Abnormal low temp. (heater)

16.5.41 C3852: Abnormal low temp. (press)

Relevant electrical parts	
Fusing unit	DC power supply (DCPU) Mechanical control board (MFPB)

Step	Action	WIRING DIAGRAM	
		Control signal	Location (Electrical component)
1	Check the fusing unit for correct installation (whether it is secured in position).	—	—
2	Check the open/close operation of the right door.	—	—
3	Check the fusing unit, MFPB and DCPU for proper connection and correct or change as necessary.	—	—
4	Change fusing unit	—	—
5	Change MFPB	—	—
6	Change DCPU	—	—

16.5.42 C3461: Fusing unit new article release

Relevant electrical parts	
Fusing unit	Mechanical control board (MFPB)

Step	Action	WIRING DIAGRAM	
		Control signal	Location (Electrical component)
1	Check the fusing unit for correct installation (whether it is secured in position).	—	—
2	Check the fusing unit, MFPB for proper connection and correct or change as necessary.	—	—
3	Reinstall fusing unit	—	—
4	Change fusing unit	—	—
5	Change MFPB	—	—

16.5.43 C4151: Polygon motor/C failure to turn

16.5.44 C4152: Polygon motor/M failure to turn

16.5.45 C4153: Polygon motor/Y failure to turn

16.5.46 C4154: Polygon motor/K failure to turn

Relevant electrical parts	
PH unit	PH interface board (PHICB) Mechanical control board (MFPB)

Step	Action	WIRING DIAGRAM	
		Control signal	Location (Electrical component)
1	Check the connector for proper connection and correct as necessary.	—	—
2	Change PH unit	—	—
3	Change PHICB	—	—
4	Change MFPB	—	—

16.5.47 C4551: Laser malfunction (cyan)

16.5.48 C4552: Laser malfunction (magenta)

16.5.49 C4553: Laser malfunction (yellow)

16.5.50 C4554: Laser malfunction (black)

Relevant electrical parts	
PH unit	PH interface board (PHICB) Mechanical control board (MFPB)

Step	Action	WIRING DIAGRAM	
		Control signal	Location (Electrical component)
1	Check the connector for proper connection and correct as necessary.	—	—
2	Change PH unit	—	—
3	Change PHICB	—	—
4	Change MFPB	—	—

16.5.51 C4705: Image output time out

Relevant electrical parts	
Printer control board (PRCB)	

Step	Action	WIRING DIAGRAM	
		Control signal	Location (Electrical component)
1	Select [Service Mode] → [State Confirmation] → [Memory/HDD Adj.] → [Memory Bus Check] → [Memory→PRT], and conduct the memory bus check function.	—	—
2	Check the connectors on PRCB for proper connection and correct as necessary.	—	—
3	Change PRCB	—	—

16.5.52 C4761: Compression hardware timeout

16.5.53 C4765: Extraction hardware timeout

16.5.54 C4770: JBIG0 error

16.5.55 C4771: JBIG1 error

16.5.56 C4772: JBIG2 error

16.5.57 C4773: JBIG3 error

16.5.58 C4780: Compressor 0 command buffer stop failure

16.5.59 C4781: Compressor 1 command buffer stop failure

16.5.60 C4782: Compressor 2 command buffer stop failure

16.5.61 C4783: Compressor 3 command buffer stop failure

Relevant electrical parts	
Printer control board (PRCB)	DIMM0 (Work0) DIMM1 (Work1)

Step	Action	WIRING DIAGRAM	
		Control signal	Location (Electrical component)
1	When the error is displayed after the memory check, remove and insert the DIMM0 and DIMM1 again to recheck (C4765).	—	—
2	Change PRCB	—	—

16.5.62 C5102: Main motor's failure to turn

Relevant electrical parts	
Main motor (M1)	Mechanical control board (MFPB) DC power supply (DCPU)

Step	Action	WIRING DIAGRAM	
		Control signal	Location (Electrical component)
1	Check the M1 connector for proper connection and correct as necessary.	—	—
2	Check M1 for proper drive coupling and correct as necessary.	—	—
3	Check the MFPB connector for proper connection and correct as necessary.	—	—
4	M1 operation check	MFPB CNDM1-5 (REM) MFPB CNDM1-8 (LOCK)	L-2
5	Change MFPB	—	—
6	Change DCPU	—	—

16.5.63 C5103: Main motor turning at abnormal timing

Relevant electrical parts	
Main motor (M1)	Mechanical control board (MFPB) DC power supply (DCPU)

Step	Action	WIRING DIAGRAM	
		Control signal	Location (Electrical component)
1	M1 operation check	MFPB CNDM1-5 (REM) MFPB CNDM1-8 (LOCK)	L-2
2	Change MFPB	—	—
3	Change DCPU	—	—

16.5.64 C5351: Power supply cooling fan motor/1's failure to turn

Relevant electrical parts	
Power supply cooling fan motor/1 (M8)	DC power supply (DCPU)

Step	Action	WIRING DIAGRAM	
		Control signal	Location (Electrical component)
1	Check the connector of motor for proper connection and correct as necessary.	—	—
2	Check the fan for possible overload and correct as necessary.	—	—
3	M8 operation check	MFPB CNLV3-2 (ON) MFPB CNLV3-3 (LOCK)	C-25
4	Change DCPU	—	—

16.5.65 C5353: Cooling fan motor 2's failure to turn

Relevant electrical parts	
Cooling fan motor/2 (M22)	Mechanical control board (MFPB)

Step	Action	WIRING DIAGRAM	
		Control signal	Location (Electrical component)
1	Check the connector of motor for proper connection and correct as necessary.	—	—
2	Check the fan for possible overload and correct as necessary.	—	—
3	M22 operation check	MFPB CNRE-3 (ON) MFPB CNR2FAN-6 (LOCK)	L-8
4	Change MFPB	—	—

16.5.66 C5354: Ozone ventilation fan motor's failure to turn

Relevant electrical parts	
Ozone ventilation fan motor (M14)	Mechanical control board (MFPB)

Step	Action	WIRING DIAGRAM	
		Control signal	Location (Electrical component)
1	Check the connector of motor for proper connection and correct as necessary.	—	—
2	Check the fan for possible overload and correct as necessary.	—	—
3	M14 operation check	MFPB CNLP-9 (ON) MFPB CNLP-11 (LOCK)	C-10
4	Change MFPB	—	—

16.5.67 C5355: Cooling fan motor 3's failure to turn

Relevant electrical parts	
Cooling fan motor/3 (M23)	Mechanical control board (MFPB)

Step	Action	WIRING DIAGRAM	
		Control signal	Location (Electrical component)
1	Check the connector of motor for proper connection and correct as necessary.	—	—
2	Check the fan for possible overload and correct as necessary.	—	—
3	M23 operation check	MFPB CNR2FAN-4 (ON) MFPB CNR2FAN-6 (LOCK)	L-3
4	Change MFPB	—	—

16.5.68 C5357: Cooling fan motor/1's failure to turn

Relevant electrical parts	
Cooling fan motor/1 (M12)	Mechanical control board (MFPB)

Step	Action	WIRING DIAGRAM	
		Control signal	Location (Electrical component)
1	Check the connector of motor for proper connection and correct as necessary.	—	—
2	Check the fan for possible overload and correct as necessary.	—	—
3	M12 operation check	MFPB CNR2FAN-7 (ON) MFPB CNR2FAN-9 (LOCK)	L-3
4	Change MFPB	—	—

16.5.69 C5358: Power supply cooling fan motor/2's failure to turn

Relevant electrical parts	
Power supply cooling fan motor/2 (M9)	Mechanical control board (MFPB)

Step	Action	WIRING DIAGRAM	
		Control signal	Location (Electrical component)
1	Check the connector of motor for proper connection and correct as necessary.	—	—
2	Check the fan for possible overload and correct as necessary.	—	—
3	M9 operation check	MFPB CNLP-15 (ON) MFPB CNLP-16 (LOCK)	C-10
4	Change MFPB	—	—

16.5.70 C6102: Drive home sensor malfunction

16.5.71 C6103: Slider over run

Relevant electrical parts	
Scanner home sensor (PC201) Scanner motor (M201)	Scanner motor drive board (SCADB) Image processing board (IPB)

Step	Action	WIRING DIAGRAM	
		Control signal	Location (Electrical component)
1	Correct or change the scanner drive (cable, pulley, gear, belt) if it is faulty.	—	—
2	Correct the scanner motor set screw if loose.	—	—
3	Adjust [Image Position Leading Edge] and [Feed Direction Adjustment].	—	—
4	Check the PC201, M201, SCADB and IPB connector for proper connection and correct as necessary.	—	—
5	PC201 I/O check, sensor check	IPB PJ11IPB-8 (ON)	T-13
6	M201 operation check	SCADB PJ3SCADB-1 (REM) SCADB PJ3SCADB-3 (LOCK)	Y-7
7	Change SCADB.	—	—
8	Change IPB.	—	—

16.5.72 C6301: Scanner cooling fan motor's failure to turn

Relevant electrical parts	
Scanner cooling fan motor (M202)	Image processing board (IPB) Mechanical control board (MFPB)

Step	Action	WIRING DIAGRAM	
		Control signal	Location (Electrical component)
1	Check the connector of motor for proper connection and correct as necessary.	—	—
2	Check the fan for possible overload and correct as necessary.	—	—
3	M202 operation check	IPB PJ81IPB-2 (REM) IPB PJ81IPB-3 (LOCK)	U-10
4	Change IPB	—	—
5	Change MFPB	—	—

16.5.73 C6302: Exposure lamp cooling fan motor's failure to turn

Relevant electrical parts	
Exposure lamp cooling fan motor (M203)	Image processing board (IPB) Mechanical control board (MFPB)

Step	Action	WIRING DIAGRAM	
		Control signal	Location (Electrical component)
1	Check the connector of motor for proper connection and correct as necessary.	—	—
2	Check the fan for possible overload and correct as necessary.	—	—
3	M203 operation check	IPB PJ82IPB-2 (REM) IPB PJ82IPB-3 (LOCK)	U-11
4	Change IPB	—	—
5	Change MFPB	—	—

16.5.74 C6704: Image input time out

Relevant electrical parts	
Printer control board (PRCB)	Image processing board (IPB)

Step	Action	WIRING DIAGRAM	
		Control signal	Location (Electrical component)
1	Select [Service Mode] → [State Confirmation] → [Memory/HDD Adj.] → [Memory Bus Check] → [Scanner→Memory], and conduct the memory bus function.	—	—
2	Check the connectors between IPB and PRCB for proper connection and correct as necessary.	—	—
3	Change PRCB	—	—
4	Change IPB	—	—

16.5.75 C6751: CCD clamp/gain adjustment failure

Relevant electrical parts	
Scanner assy	CCD sensor unit Image processing board (IPB)

Step	Action	WIRING DIAGRAM	
		Control signal	Location (Electrical component)
1	Correct the harness connection between CCDB and IPB if faulty.	—	—
2	Check for possible extraneous light and correct as necessary.	—	—
3	Clean the lens, mirrors, CCD surface, and shading sheet if dirty	—	—
4	Correct reflective mirror of the scanner if faulty, or change scanner.	—	—
5	Change CCD sensor unit.	—	—
6	Change IPB	—	—

16.5.76 C9401: Exposure lamp's failure to turn ON

16.5.77 C9402: Exposure lamp turning ON at abnormal timing

Relevant electrical parts	
Scanner assy Flat cable	Image processing board (IPB)

Step	Action	WIRING DIAGRAM	
		Control signal	Location (Electrical component)
1	Check the flat cable for proper connection and correct or change as necessary.	—	—
2	Change scanner assy	—	—
3	Change IPB	—	—

16.5.78 CA051: Standard controller configuration failure

16.5.79 CA052: Controller hardware error

16.5.80 CA053: Controller start failure

Relevant electrical parts	
Printer control board (PRCB)	

Step	Action	WIRING DIAGRAM	
		Control signal	Location (Electrical component)
1	Check to see if the following setting has been correctly made: [Service Mode] → [System 2] → [Image Controller Setting]. If changing the setting, turn OFF the main power switch and turn it ON again after 10 seconds or more.	—	—
2	Check the connectors of the printer control board (PRCB) for proper connection and correct as necessary.	—	—
3	Change PRCB	—	—

16.5.81 CC001: Vendor connection failure

Relevant electrical parts	
Mechanical control board (MFPB)	Coin vendor (Japan) Coin vendor kit (North America, Europe)

Step	Action	WIRING DIAGRAM	
		Control signal	Location (Electrical component)
1	Check the vendor connector for proper connection and correct as necessary.	—	—
2	Check the MFPB connector for proper connection and correct as necessary.	—	—
3	Change MFPB	—	—

16.5.82 CC151: ROM contents error upon startup (MSC)

16.5.83 CC152: ROM contents error upon startup (Scanner)

16.5.84 CC153: ROM contents error upon startup (PRT)

16.5.85 CC154: ROM contents error upon startup (PH)

Step	Action	WIRING DIAGRAM	
		Control signal	Location (Electrical component)
1	Check the ROM version.	—	—
2	Rewrite the firmware.	—	—
3	Replace the appropriate board.	—	—

16.5.86 CC163: ROM contents error (PRT)

Relevant electrical parts	
Mechanical Control Board (MFPB)	

Step	Action	WIRING DIAGRAM	
		Control signal	Location (Electrical component)
1	Check the ROM version.	—	—
2	Rewrite the firmware.	—	—
3	Change MFPB	—	—

1 16.5.87 CD001: Hard disk initialization abnormality

16.5.88 CD002: JOB RAM save error

Relevant electrical parts	
Printer control board (PRCB)	Hard disk

Step	Action	WIRING DIAGRAM	
		Control signal	Location (Electrical component)
1	Check the hard disk connector for proper connection and correct as necessary.	—	—
2	Format hard disk.	—	—
3	Change hard disk.	—	—
4	Change PRCB.	—	—

16.5.89 CD004: Hard disk access error

16.5.90 CD005: Hard disk error 1

16.5.91 CD006: Hard disk error 2

16.5.92 CD007: Hard disk error 3

16.5.93 CD008: Hard disk error 4

16.5.94 CD009: Hard disk error 5

16.5.95 CD00A: Hard disk error 6

16.5.96 CD00B: Hard disk error 7

16.5.97 CD00C: Hard disk error 8

16.5.98 CD00D: Hard disk error 9

16.5.99 CD00E: Hard disk error A

16.5.100 CD00F: Hard disk data transfer error

16.5.101 CD020: Hard disk verify error

Relevant electrical parts	
Printer control board (PRCB)	Hard disk

Step	Action	WIRING DIAGRAM	
		Control signal	Location (Electrical component)
1	Check the hard disk connector for proper connection and correct as necessary.	—	—
2	Reinstall the hard disk.	—	—
3	Change hard disk.	—	—
4	Change PRCB.	—	—

16.5.102 CD010: Hard disk unformat

Relevant electrical parts	
Printer control board (PRCB)	Hard disk

Step	Action	WIRING DIAGRAM	
		Control signal	Location (Electrical component)
1	Select [Service Mode] → [State Confirmation] → [Memory/HDD Adj.] → [HDD Format], and conduct the HDD format function.	—	—
2	Change hard disk.	—	—
3	Change PRCB	—	—

16.5.103 CD011: Hard disk specifications error

Relevant electrical parts	
Hard disk	

Step	Action	WIRING DIAGRAM	
		Control signal	Location (Electrical component)
1	Check the hard disk specifications.	—	—
2	Change the hard disk.	—	—

16.5.104 CD201: File memory mounting error

16.5.105 CD202: Memory capacity discrepancy

16.5.106 CD203: Memory capacity discrepancy 2

Relevant Electrical Parts	
Printer control board (PRCB)	DIMM/0 (WORK0) DIMM/1 (WORK1)

Step	Action	WIRING DIAGRAM	
		Control Signal	Location (Electrical Component)
1	Check to see if the memory (DIMM/0, DIMM/1) on PRCB is installed correctly.	—	—
2	Change the memory (DIMM/0, DIMM/1) on PRCB.	—	—
3	Change PRCB.	—	—

16.5.107 CD204: Expanded memory unit not mounted at JScribe able

Relevant Electrical Parts	
Printer control board (PRCB)	Expanded memory unit EM-309 (option)

Step	Action	WIRING DIAGRAM	
		Control Signal	Location (Electrical Component)
1	Check to see if JScribe is able or disable in the following setting. [Service Mode] → [System 1] → [Communication System Setting] * When JScribe function is not used, select “CS Remote Care”. For details of setting, see “Adjustment/Setting.” See P.351	—	—
2	Check to see if the optional expanded memory unit (EM-309) is installed correctly.	—	—
3	Change the optional expanded memory unit (EM-309).	—	—
4	Change PRCB.	—	—

16.5.108 CD211: PCI-SDRAM DMA operation failure

16.5.109 CD212: Compression/extraction timeout detection

Relevant Electrical Parts	
Printer control board (PRCB)	

Step	Action	WIRING DIAGRAM	
		Control Signal	Location (Electrical Component)
1	Change PRCB.	—	—

16.5.110 CD231: No Fax memory at FAX board mounting

Relevant Electrical Parts	
Printer control board (PRCB) PCI expansion board	FAX board FAX meory

Step	Action	WIRING DIAGRAM	
		Control Signal	Location (Electrical Component)
1	Check to see if the FAX memory is installed correctly.	—	—
2	Check to see if the FAX board is installed correctly.	—	—
3	Check to see if the PCI expansion board is installed correctly.	—	—
4	Change FAX memory.	—	—
5	Change PRCB.	—	—

16.5.111 CD241: Encryption board setting error

16.5.112 CD242: Encryption board mounting error

Relevant Electrical Parts	
Encryption board (SC-503)	

Step	Action	WIRING DIAGRAM	
		Control Signal	Location (Electrical Component)
1	Check the encryption board connector for proper connection and correct as necessary.	—	—
2	Change encryption board.	—	—

16.5.113 CD251: No JPEG board mounting at JPEG board mount setting

Relevant Electrical Parts	
Printer control board (PRCB)	JPEG board (SA-501) PCI expansion board

Step	Action	WIRING DIAGRAM	
		Control Signal	Location (Electrical Component)
1	Check the JPEG board connector for proper connection and correct as necessary.	—	—
2	Check the PCI expansion board connector for proper connection and correct as necessary.	—	—
3	Change JPEG board.	—	—
4	Change PCI expansion board.	—	—
5	Change PRCB.	—	—

16.5.114 CE001: Abnormal message queue

16.5.115 CE003: Task error

16.5.116 CE004: Event error

16.5.117 CE005: Memory access error

16.5.118 CE006: Header access error

16.5.119 CE007: DIMM initialize error

Relevant electrical parts	
Printer control board (PRCB)	

Step	Action	WIRING DIAGRAM	
		Control signal	Location (Electrical component)
1	Check the connectors on PRCB for proper connection and correct as necessary.	—	—
2	Change PRCB.	—	—

16.5.120 CD3##: NVRAM data error

- When the data stored due to the NVRAM trouble is lost, backup data can be used for restoration.
- Trouble code [C-D370] will be displayed when multiple errors (over 5) of NVRAM data are detected, which can be restored with one restoration command.
- Data backup will be automatically performed every hour. Backup can also be performed manually with the following setting.
  [Service Mode] → [Enhanced Security] → [NVRAM Data Back Up]

See P.388

1. Touch the following code on the trouble code display screen.
   Stop → 0 → 7 → 1 → 3 → 9
2. [*] will be displayed on the trouble code screen.

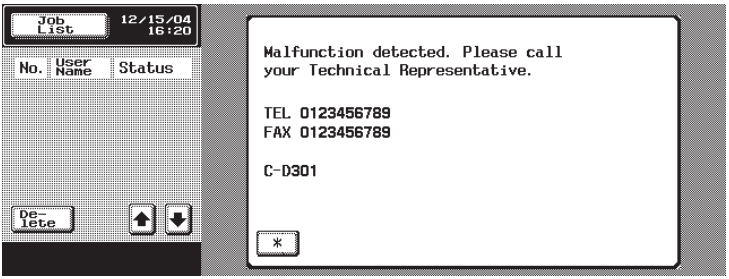

4037F4E602DA

3. Touch [✳].
4. The screen will be shifted to the data restoration screen to perform data restoration.

NOTE

- **When the restoration is performed in a short time, data restoration screen may not be displayed.**

5. Check the message which indicates that the data restoration was successfully conducted. Turn OFF the main power switch and turn it ON again more than 10 seconds after.

NOTE

- **In case it failed to restore data, return to the trouble code screen.**

16.5.121 CE002: Message and method parameter failure

Relevant electrical parts	
Printer control board (PRCB)	Hard disk

Step	Action	WIRING DIAGRAM	
		Control signal	Location (Electrical component)
1	If it occurred after upgrading the firmware, conduct the following setting. [Service Mode] → [Sate Confirmation] → [Memory/HDD Adj.] → [HDD Version Up] See P.374	—	—
2	Turn OFF the main power switch and turn it ON again, and conduct the following setting. [Service Mode] → [System 1] → [Initialization] → [Data Clear]. See P.350	—	—
3	Format hard disk.	—	—
4	Change hard disk.	—	—
5	Change PRCB.	—	—

16.5.122 CEEE1: MSC undefined malfunction occurring

Relevant electrical parts	
Printer control board (PRCB)	

Step	Action	WIRING DIAGRAM	
		Control signal	Location (Electrical component)
1	Check the connectors on PRCB for proper connection and correct as necessary.	—	—
2	Change PRCB	—	—

16.5.123 CEEE2: Scanner section undefined malfunction

Relevant electrical parts	
Scanner assy	CCD board (CCDB) Image processing board (IPB)

Step	Action	WIRING DIAGRAM	
		Control signal	Location (Electrical component)
1	Correct the connector connection between CCDB and IPB if faulty.	—	—
2	Change IPB	—	—
3	Change CCDB	—	—

16.5.124 CEEE3: Engine section undefined malfunction

Relevant electrical parts	
Mechanical control board (MFPB)	

Step	Action	WIRING DIAGRAM	
		Control signal	Location (Electrical component)
1	Check the MFPB connector for proper connection and correct as necessary.	—	—
2	Change MFPB	—	—

17. Power supply trouble

17.1 Machine is not energized at all (DCPU operation check)

Relevant electrical parts	
Main power switch (S1) Mechanical control board (MFPB)	DC power supply (DCPU)

Step	Check item	WIRING DIAGRAM (Location)	Result	Action
1	Is a power voltage supplied across PJ1DCPU-1 and 2 on DCPU?	R-2	NO	Check the WIRING from the wall outlet to S1 PJ1DCPU.
2	Are the fuses on DCPU conducting?	—	NO	Change DCPU.
3	Is DC24 V being output from PJ5DCPU-2 on DCPU?	P-7	NO	Change DCPU.
4	Is DC5 V being input to PJ7DCPU-3 on DCPU?	P-7	NO	Change DCPU.
5	Is DC5 V being input to CNPOW-4 on the Control Board? (LED on MFPB does not blink.)	I-7	NO	Change DCPU.
			YES	Change MFPB

17.2 Control panel indicators do not light.

Relevant electrical parts	
Image processing board (IPB) Control panel (UN201)	DC power supply (DCPU)

Step	Check item	WIRING DIAGRAM (Location)	Result	Action
1	Is the I/F cable between the scanner and engine connected properly?	—	NO	Reconnect or change the I/F cable.
2	Is a power voltage being applied across PJ1DCPU-1 and 2 on DCPU?	R-2	NO	Check the WIRING from the wall outlet to S1 PJ1DCPU.
3	Is the fuse on DCPU conducting?	—	NO	Change DCPU.
4	Is DC5 V being output from PJ13DCPU-1 on DCPU and DC24 V from PJ12DCPU-5?	R-8	NO	Change DCPU.
5	Is PJ12IPB on IPB securely connected?	X-10 to 12	NO	Reconnect.
6	Is CN1UN201 on UN201 securely connected?	X-20	NO	Reconnect.
			YES	Change UN201. Change IPB.

17.3 Fusing heaters do not operate

Relevant electrical parts	
Primary interlock switch (S2) Fusing unit	DC power supply (DCPU)

Step	Check item	WIRING DIAGRAM (Location)	Result	Action
1	Is the power source voltage applied across PJ2DCPU-1 to 3 on DCPU? During this time, the right door should be closed.	R-3 to 5	NO	Check wiring from power outlet to S2 to PJ2DCPU.
2	Is the power source voltage applied across CN30-1 and 3, or across 2 and 3?	S-6 to 7	YES	Fusing unit
			NO	Change DCPU.

17.4 Power is not supplied to option

17.4.1 Automatic document feeder (DF-608)

Step	Check item	WIRING DIAGRAM (Location)	Result	Action
1	Is DC24 V being output from CN51-1 on DF-608?	Z-8	YES	Malfunction in DF-608
2	Is DC24 V being output from PJ12DCPU-6 on DCPU?	R-8	NO	Check wiring from DCPU to ADF.
3	Is the fuse on DCPU conducting?	—	YES	Change DCPU.
			NO	Malfunction in DF-608

17.4.2 Paper feed cabinet (PC-103/203/403)

Step	Check item	WIRING DIAGRAM (Location)	Result	Action
1	Is DC24 V being applied to hookup connector CN12-2?	Q-26	NO	Malfunction in paper feed cabinet
2	Is DC24 V being output from CNCST-2 on MFPB?	J-24	NO	Check wiring from MFPB to CN12 to paper feed cabinet.
3	Is the fuse on DCPU conducting?	—	YES	Change DCPU.
			NO	Malfunction in paper feed cabinet

17.4.3 Duplex unit (AD-503)

Step	Check item	WIRING DIAGRAM (Location)	Result	Action
1	Is DC24 V being output from CN19-2 on Duplex?	K-22	NO	Malfunction in duplex.
2	Is DC24 V being output from CNDUP-2 on MFPB?	J-22	NO	Check wiring from MFPB to CN19 to duplex.
3	Is the fuse on DCPU conducting?	—	YES	Change DCPU.
			NO	Malfunction in duplex.

17.4.4 Finisher (FS-514)

Step	Check item	WIRING DIAGRAM (Location)	Result	Action
1	Are DC24 V being applied to CN65-1 of the Finisher?	E-27	NO	Malfunction in finisher.
2	Are DC24 V being applied to PJ6DCPU-1 on DCPU?	R-7	NO	Check wiring from DCPU to finisher.
3	Is the fuse on DCPU conducting?	—	YES	Change DCPU.
			NO	Malfunction in finisher.

18. Image quality problem

18.1 How to read element date

- As part of troubleshooting procedures, the numeric values set for “State Confirmation” available from “Service Mode” can be used to isolate the cause of the image problem.

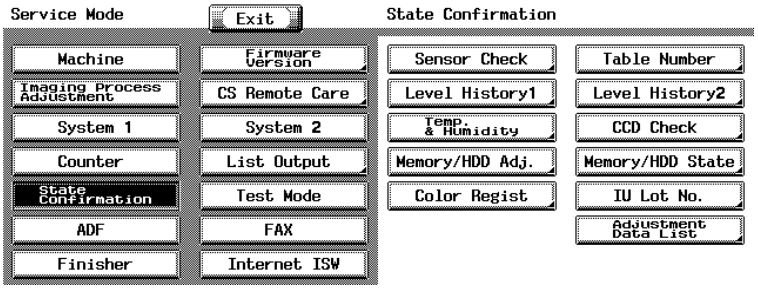

9J06F3E506DA

18.1.1 Table number

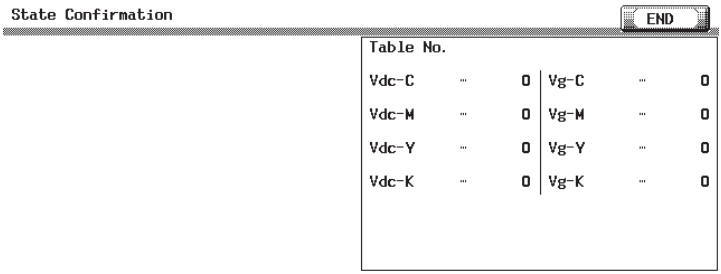

4038F4E517DA

Vdc-C Vdc-M Vdc-Y Vdc-K	• Shows the developing bias value of each color of toner when an image is produced. • Standard values: around 400 V • A correction is made to make the image lighter when the numeric value is greater. • A correction is made to make the image darker when the numeric value is smaller. • Relevant Components: Imaging unit, high voltage unit (developing bias)
Vg-C Vg-M Vg-Y Vg-K	• Shows the grid voltage value of each color of toner when an image is produced. • Standard values: around 500 V • A correction is made to make the image lighter when the numeric value is greater. • A correction is made to make the image darker when the numeric value is smaller. • Relevant Components: Imaging unit, high voltage unit (developing bias)

18.1.2 Level history 1

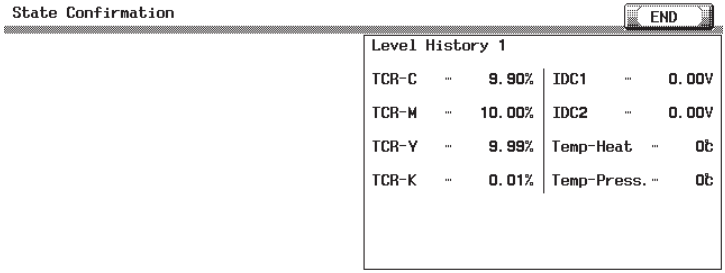

4038F4E515DA

TCR-C TCR-M TCR-Y TCR-K	• Shows the T/C ratio (in 0.01 % increments). • Standard value: 8 ± 2 % (TCR-C/M/Y), 7 ± 2 % (TCR-K) • Relevant components: PH unit, TCR sensor K
IDC1 IDC2	• Shows the IDC bare surface output reading taken last (in 0.01 V increments). • It should normally be around 4.3 V. • The output range is 0 V to 5 V. • “Reading taken last” means: Latest toner density When the Start key is pressed, the output value is displayed while a test print is being produced. • Relevant components: IDC sensor, transfer belt unit
Temp-Belt. Temp-Press.	• Shows the temperature of the heating roller (Temp-Heat) and the fusing pressure roller (Temp-Press.) (in 1 °C increments). • Relevant components: Fusing unit

18.1.3 Level history 2

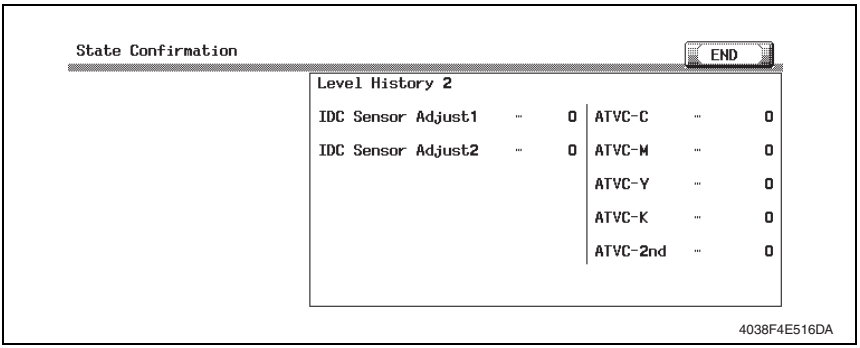

IDC Sensor Adjust 1 IDC Sensor Adjust 2	• Shows the IDC intensity adjustment value. • It should normally be around 40 and can range from 0 to 255. • The value becomes greater as the transfer belt unit has been used more. • Relevant components: IDC sensor, transfer belt unit
ATVC -C ATVC -M ATVC -Y ATVC -K ATVC -2nd	• Shows the latest ATVC level (which varies according to the paper type). • 300 V to 3000 V (ATVC-C/-M/-Y/-K) • 300 V to 4800 V (ATVC-2nd) • Relevant components: Transfer belt unit, High voltage unit (Image transfer, neutralizing)

18.2 How to identify problematic part

- This chapter is divided into two parts: “Initial check items” and “Troubleshooting procedure by a particular image quality problem.”
- When an image quality problem occurs, first go through the “Initial check items” and, if the cause is yet to be identified, go to “Troubleshooting procedure by a particular image quality problem.”

18.2.1 Initial check items

A. Initial check items 1

- Check first to see if image data is properly transmitted between scanner and memory, and between memory and printer.

Action	Result	Next Step
Enter the Service Mode, select [State Confirmation] → [Memory/HDD Adj.] → [Memory Bus Check], and select and carry out [Scanner→Memory] and [Memory→PRT] checks.	OK	Initial check items 2
	NG	P.474, P.469 (action as instructed)

B. Initial check items 2

- Let the machine produce a test print and determine whether the image problem is attributable to the scanner or printer system.

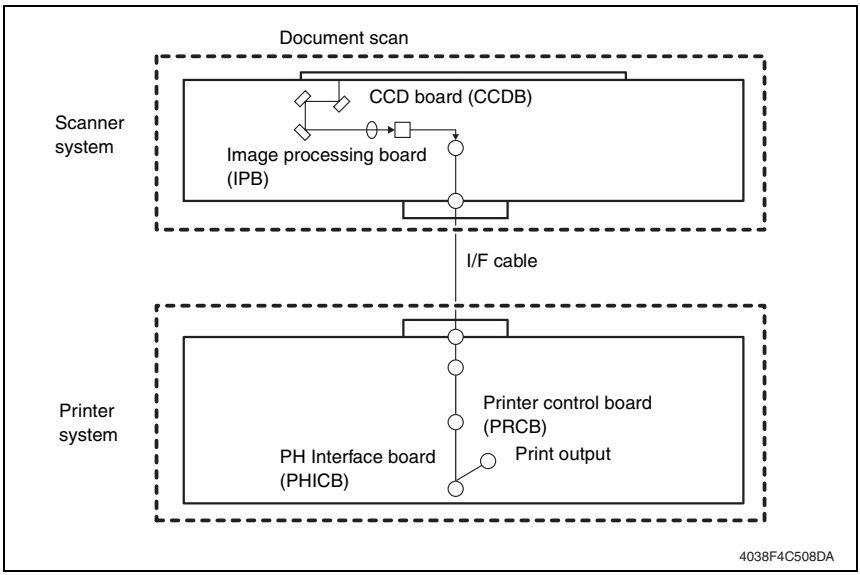

- Evaluation procedure

Image problem	Action	Result	Cause	Next step
Lines, bands	From [Service Mode], select [Test Mode] → [Halftone Pattern] → [SINGLE] → [HYPER] → [Gradation] → [C→M→Y→K] → [Density 64], and produce a test print. Is image problem evident?	YES	Printer	Initial check items 3
		NO	Scanner	P.493

C. Initial check items 3

- If the printer is responsible for the image problem, let the machine produce a test print and determine whether the image problem occurs in a specific single color or four colors

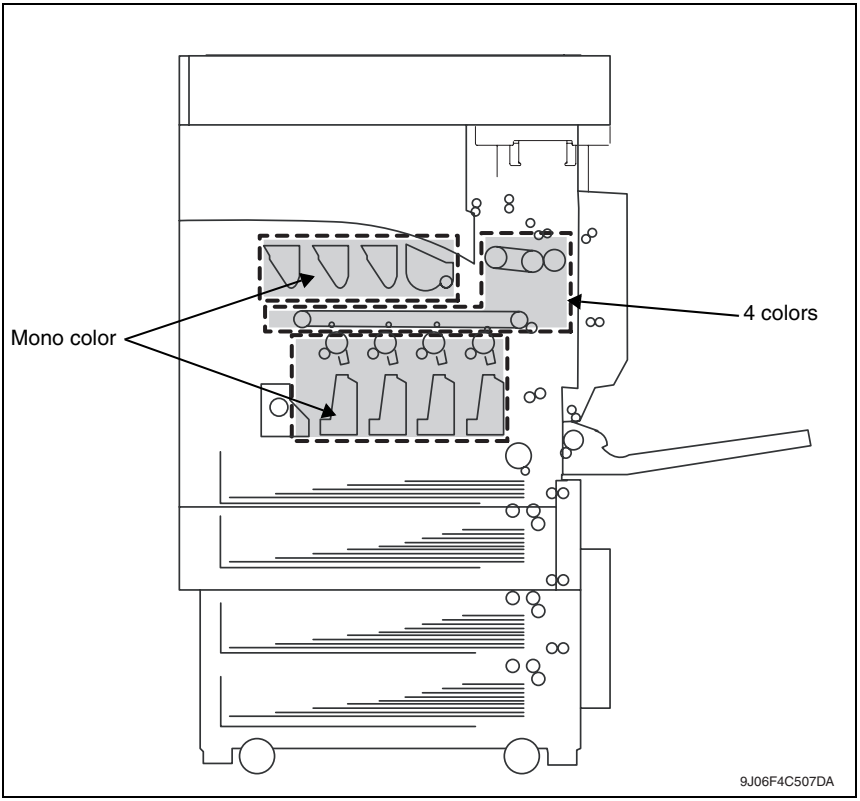

- Evaluation procedure

Image problem	Action	Result	Cause	Next step
Lines, bands	From [Service Mode], select [Test Mode] → [Halftone Pattern] → [SINGLE] → [HYPER] → [Gradation] → [C→M→Y→K] → [Density 64], and produce a test print. Is image problem evident in each of all four colors?	YES	Printer, 4 colors	P.522
		NO	Printer, single color	P.508

18.3 Solution

18.3.1 Scanner system: white lines in sub scan direction, white bands in sub scan direction, colored lines in sub scan direction, and colored bands in sub scan direction

A. Typical faulty images

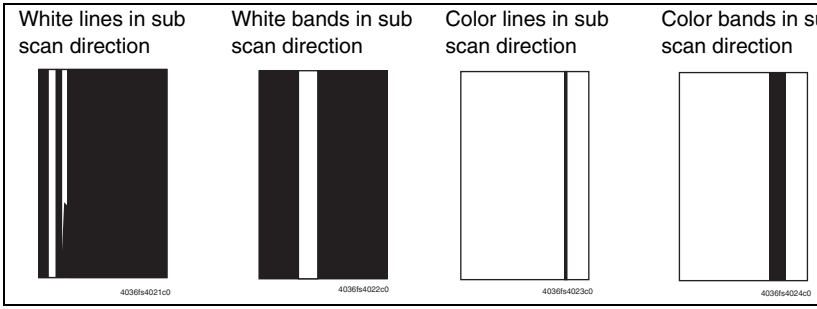

B. Troubleshooting procedure

(1) When the original glass is used

Step	Section	Check item	Result	Action
1	Original	Original is damaged or dirty.	YES	Change original.
2	Original cover	Original pad is dirty.	YES	Clean.
3	Original glass	Original glass is dirty.	YES	Wipe the surface clean with a soft cloth.
4	Shading sheet	Shading sheet is dirty.	YES	Wipe the surface clean with a soft cloth.
5	Mirror, lens, exposure Lamp, and reflectors	Mirror is dirty	YES	Clean.
		Lens is dirty	YES	Clean.
		Exposure lamp is dirty	YES	Clean.
		Reflectors are dirty	YES	Clean.
6	Machine → Scan Area → Image Position: Side Edge (Service Mode)	The adjustment value for [Image Position: Side Edge] falls within the specified range.	NO	Readjust.
7		The white lines/bands or colored lines/bands are blurry.	YES	Change scanner assy. Change CCD unit.

(2) When the ADF is used

Step	Section	Check item	Result	Action
1	Original	Original is damaged or dirty.	YES	Change original.
2	ADF reading section	Glass is dirty.	YES	Clean.
3	ADF scanning guide	ADF scanning guide is damaged or dirty.	YES	Clean.
4	Mirror, lens, exposure Lamp, and reflectors	Mirror is dirty	YES	Clean.
		Lens is dirty	YES	Clean.
		Exposure lamp is dirty	YES	Clean.
		Reflectors are dirty	YES	Clean.
5	Machine → Scan Area → Image Position: Side Edge (Service Mode)	The adjustment value for [Image Position: Side Edge] falls within the specified range.	NO	Readjust.
6	Glass step sheet for the original glass moving unit	The glass step sheet is tilted.	YES	Readjust.
7	ADF read position	The white lines/bands or colored lines/bands occurs when reading the original from ADF.	YES	Readjust.
8		The white lines/bands or colored lines/bands are blurry.	YES	Change scanner assy. Change CCD unit.

18.3.2 Scanner system: white lines in main scan direction, white bands in main scan direction, colored lines in main scan direction, and colored bands in main scan direction

A. Typical faulty images

White lines in main scan direction	White bands in main scan direction	Color lines in main scan direction	Color bands in main scan direction
4036fs4025c0	4036fs4026c0	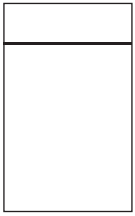 4036fs4027c0	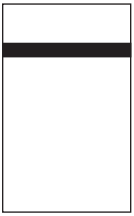 4036fs4028c0

B. Troubleshooting procedure

Step	Section	Check item	Result	Action
1	Original	Original is damaged or dirty.	YES	Change original.
2	Original cover	Original pad is dirty.	YES	Clean.
3	Original glass	Original glass is dirty.	YES	Wipe the surface clean with a soft cloth.
4	Machine → Scan Area → Image Position: Top Edge (Service Mode)	The adjustment value for [Image Position: Leading Edge] falls within the specified range.	NO	Readjust.
5		The problem has been eliminated through the checks of steps up to 4.	NO	Change scanner assy. Change CCD unit.

18.3.3 Scanner system: color spots

A. Typical faulty images

B. Troubleshooting procedure

Step	Section	Check item	Result	Action
1	Original	Original is damaged or dirty.	YES	Change original.
2	Original cover	Original pad is dirty.	YES	Clean.
3	Original glass	Original glass is dirty.	YES	Wipe the surface clean with a soft cloth.
4		The problem has been eliminated through the checks of steps up to 3.	NO	Change scanner assy. Change CCD unit.

18.3.4 Scanner system: fog

A. Typical faulty images

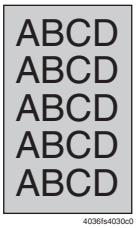

B. Troubleshooting procedure

Step	Section	Check item	Result	Action
1	Original	Original is damaged or dirty.	YES	Change original.
2	Original cover	Original pad is dirty.	YES	Clean.
3		Original cover does not lie flat.	YES	Change original cover if it is deformed or hinges are broken.
4	Original glass	Original glass is dirty.	YES	Wipe the surface clean with a soft cloth.
5	Shading sheet	Shading sheet is dirty.	YES	Wipe the surface clean with a soft cloth.
6	Mirror, lens, Exposure lamp, and reflectors	Mirror is dirty.	YES	Clean.
7		Lens is dirty.	YES	Clean.
8		Exposure lamp is dirty.	YES	Clean.
9		Reflectors are dirty.	YES	Clean.
10	Basic screen Quality/Density	The problem is eliminated when the image is produced in the manual exposure setting.	NO	Try another exposure level in manual.
11		The problem has been eliminated through the checks of steps up to 10.	NO	Change scanner assy. Change CCD unit.

18.3.5 Scanner system: blurred image, blotchy image

A. Typical faulty images

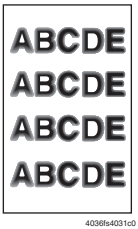

B. Troubleshooting procedure

Step	Section	Check item	Result	Action
1	Original	Original does not lie flat.	YES	Change original.
2	Original cover	Original cover does not lie flat.	YES	Change original cover if it is deformed or hinges are broken.
3	Original glass	Original glass tilts.	YES	Position original glass correctly. Check original loading position.
4	2nd/3rd mirrors carriage	Scanner is not aligned with the 2nd/3rd mirrors carriage.	YES	Perform “Focus Positioning of the scanner and 2nd/3rd mirrors carriage” and “Scanner Position Adjustment.”
5		The problem has been eliminated through the checks of steps up to 4.	NO	Change scanner assy. Change CCD unit.

18.3.6 Scanner system: incorrect color image registration, sync shift (lines in main scan direction)

A. Typical faulty images

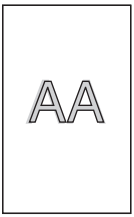

4036fs4032c0

B. Troubleshooting procedure

Step	Section	Check item	Result	Action
1	Original	Original does not lie flat.	YES	Change original.
2	Original cover	Original cover does not lie flat.	YES	Change original cover if it is deformed or hinges are broken.
3	Scanner rails	Foreign matter on rails.	YES	Clean and apply lubricant.
4	Drive cables	Cable kinks or is damaged.	YES	Correct or change.
5	Scanner assy	Scanner moves smoothly.	NO	Adjust the scanner motor timing belt. → Change bushing. → Change scanner motor.
6		The problem has been eliminated through the checks of steps up to 5.	NO	Change CCD unit.

18.3.7 Scanner system: moire

A. Typical faulty images

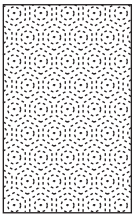

4036fs4033c0

B. Troubleshooting procedure

Step	Section	Check item	Result	Action
1	Original	Moire distortions recur even after the orientation of original has been changed.	NO	Change the original mode (select one other than that resulted in moire).
2	Basic screen Quality/Density	Moire distortions recur even after the original mode has been changed.	YES	Select “Text Mode” or “Photo Mode”.
3	Basic screen Zoom	The problem has been eliminated through the checks of steps up to 2.	NO	Change the zoom ratio.

18.3.8 Scanner system: skewed image

A. Typical faulty images

4036fs4034c0

B. Troubleshooting procedure

Step	Section	Check item	Result	Action
1	Original	Original is skew.	YES	Reposition original.
2	Original glass	Original glass is in positive contact with the flat spring without being tilt.	NO	Reinstall the glass. Check the original loading position.
3	2nd/3rd mirrors carriage	Scanner assy is not properly aligned with 2nd/3rd mirrors carriage.	YES	Perform “Focus Positioning of the scanner and 2nd/3rd mirrors carriage” and “Scanner Position Adjustment.”
4		The problem has been eliminated through the checks of steps up to 3.	NO	Change scanner assy. Change CCD unit.

18.3.9 Scanner system: distorted image

A. Typical faulty images

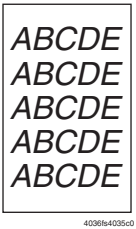

B. Troubleshooting procedure

Step	Section	Check item	Result	Action
1	Installation	Machine is installed on a level surface.	NO	Reinstall.
2	2nd/3rd mirrors carriage	Scanner assy is not properly aligned with 2nd/3rd mirrors carriage.	YES	Perform “Focus positioning of the scanner and 2nd/3rd mirrors carriage” and “Scanner Position Adjustment.”
3	Scanner motor	Scanner motor turns smoothly.	NO	Change belt. Change scanner motor.
4		The problem has been eliminated through the checks of steps up to 3.	NO	Change scanner assy. Change CCD unit.

18.3.10 Scanner system: low image density, rough image

A. Typical faulty images

B. Troubleshooting procedure

Step	Section	Check item	Result	Action
1	Original glass	Original Glass is dirty.	YES	Wipe the surface clean with a soft cloth.
2	Shading sheet	Shading sheet is dirty.	YES	Wipe the surface clean with a soft cloth.
3	Mirror, lens, Exposure lamp, and reflectors	Mirror is dirty.	YES	Clean.
4		Lens is dirty.	YES	Clean.
5		Exposure lamp is dirty.	YES	Clean.
6		Reflectors are dirty.	YES	Clean.
7		The problem has been eliminated through the checks of steps up to 6.	NO	Clean Exposure lamp. → Change scanner assy. → Change CCD unit.

18.3.11 Scanner system: defective ACS

A. Typical faulty images

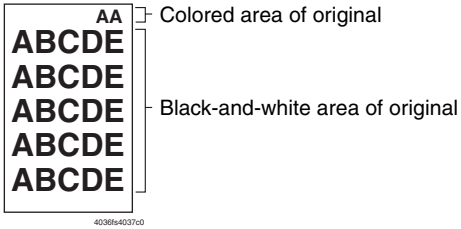

B. Troubleshooting procedure

Step	Section	Check item	Result	Action
1	Auto Color Level Adjustment [User Setting]	The problem persists even after the ACS determination level adjust function has been changed.	YES	Change the original loading direction. Make manual settings according to the type of original. (If the original contains a colored area in one of its corners, the machine may fail to properly detect the colored area.)

18.3.12 Scanner system: blank copy, black copy

A. Typical faulty images

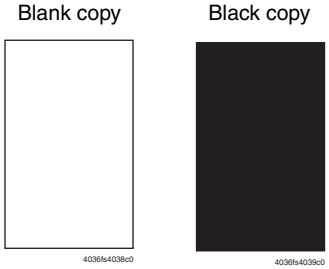

B. Troubleshooting procedure

Step	Section	Check item	Result	Action
1	Cable connecting scanner and printer	Connector is connected properly with no pins bent.	NO	Reconnect.
2	Image processing board (IPB)	Connectors on the image processing board are connected properly.	NO	Reconnect.
3	CCD Unit	Connectors of the CCD unit are connected properly.	NO	Reconnect.
4	Test Mode [Service Mode]	The problem is eliminated as checked with the image on a test pattern produced.	NO	Change I/F connection cable.
5	Image processing board (IPB)	The problem is eliminated after the I/F connection cable has been changed.	NO	Change image processing board.

18.3.13 Scanner system: abnormal image

A. Typical faulty images

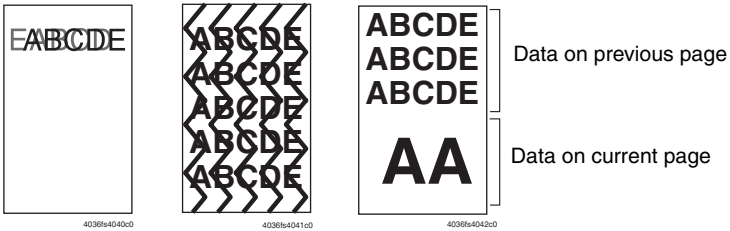

B. Troubleshooting procedure

Step	Section	Check item	Result	Action
1	Cable connecting scanner and printer	Connector is connected properly with no pins bent.	NO	Reconnect.
2	Image processing board (IPB)	Connectors on the image processing board are connected properly.	NO	Reconnect.
3	Printer control board (PRCB)	Data on previous page is mixed with data on current page.	NO	Reinstall expanded memory.
4	Test Mode [Service Mode]	The problem is eliminated as checked with the image on a test pattern produced.	NO	Change interface connection cable.
5	Image Processing Board (IPB)	The problem is eliminated after the interface connection cable has been changed.	NO	Change image processing board.
6	Printer control board (PRCB)	The problem has been eliminated through the checks of steps up to 5.	NO	Change printer control board.

18.3.14 Scanner system: uneven density

A. Typical faulty images

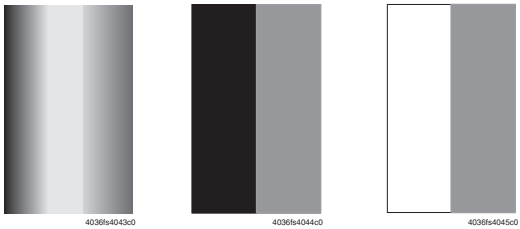

B. Troubleshooting procedure

(1) When the original glass is used

Step	Section	Check item	Result	Action
1	2nd/3rd mirrors carriage	Scanner assy is not properly aligned with 2nd/3rd mirrors carriage.	YES	Perform “Focus positioning of the scanner and 2nd/3rd mirrors carriage” and “Scanner Position Adjustment.”
2	Scanner motor	Scanner motor turns smoothly.	NO	Change belt. Change scanner motor.
3		The problem has been eliminated through the checks of steps up to 2.	NO	Change scanner assy. Change CCD unit.

(2) When the ADF is used

Step	Section	Check item	Result	Action
1	ADF read position	The uneven density occurs when reading the original from ADF.	YES	Readjust.
2	Guide support for the original glass moving unit	Guide support is tilted.	YES	Readjust.
3	Original glass moving unit	The original glass moving unit is tilted.	YES	Readjust.

18.3.15 Printer monocolor: white lines in sub scan direction, white bands in sub scan direction, colored lines colored bands in sub scan direction

A. Typical faulty images

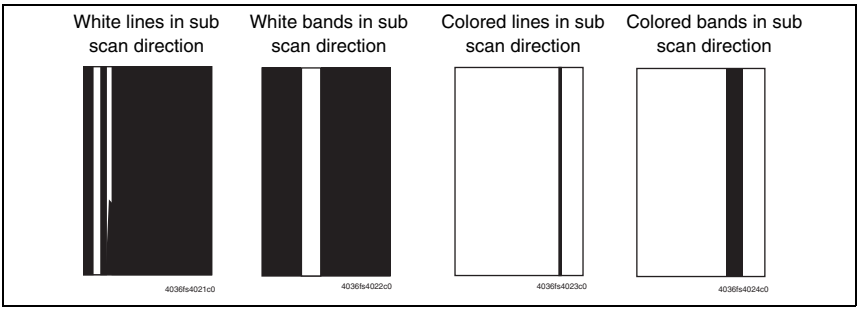

B. Troubleshooting procedure

Step	Section	Check item	Result	Action
1	Image check	A white line or black line in sub scan direction is sharp.	NO	Clean the comb electrode by moving the comb electrode cleaning lever.
2	Imaging unit	The surface of the PC drum is scratched.	YES	Change imaging unit.
3		Dirty on the outside.	YES	Clean.
4		Contact terminals make good connection between each IU and machine.	NO	Clean contact terminals.
5		Developing bias contact terminal makes good connection.	NO	Clean contact terminal and check terminal position.
6	PH unit	The surface of the PH window is dirty.	YES	Clean with cleaning jig.
7		The problem has been eliminated through the checks of steps up to 6.	NO	Change imaging unit. → Change image transfer belt unit. → Change PH unit.

18.3.16 Printer monocolor: white lines in main scan direction, white bands in main scan direction, colored lines in main scan direction, colored bands in main scan direction

A. Typical faulty images

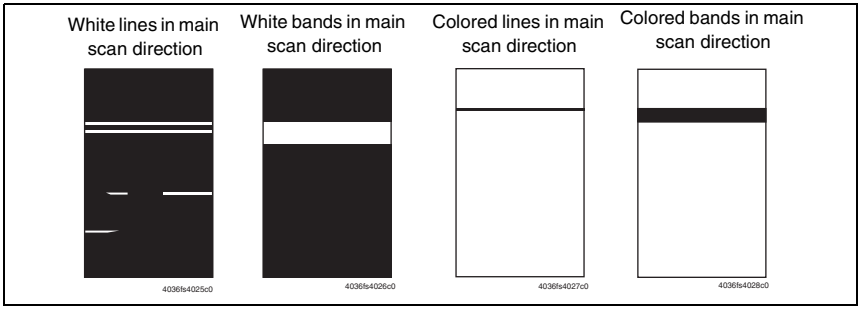

B. Troubleshooting procedure

Step	Section	Check item	Result	Action
1	Image check	A white line or black line in sub scan direction is sharp.	NO	Clean the comb electrode by moving the comb electrode cleaning lever.
2	Imaging Unit	The surface of the PC drum is scratched.	YES	Change imaging unit.
3		Dirty on the outside.	YES	Clean.
4		Contact terminals make good connection between each IU and machine.	NO	Clean contact terminals.
5		Developing bias contact terminal makes good connection.	NO	Clean contact terminal and check terminal position.
6	PH Unit	The surface of the PH window is dirty.	YES	Clean with cleaning jig.
7		The problem has been eliminated through the checks of steps up to 6.	NO	Change imaging unit. → Change image transfer belt unit. → Change PH unit.

18.3.17 Printer monocolor: uneven density in sub scan direction

A. Typical faulty images

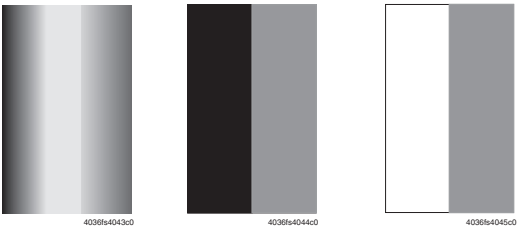

B. Troubleshooting procedure

Step	Section	Check item	Result	Action
1	High image density original	Uneven density in sub scan direction occurs at a pitch of 40 mm to 50 mm when a multi-copy cycle is run using an original with high image density (50% or more).	YES	Feed 10 to 20 blank sheets of paper with no originals placed, as the IU fails to keep up with a high demand for toner.
2	Imaging unit	The surface of the PC drum is scratched.	YES	Change imaging unit.
3		Dirty on the outside.	YES	Clean.
4	PH unit	The surface of the PH window is dirty.	YES	Clean with cleaning jig.
5	Image transfer belt unit	Cam gear operates properly.	NO	Change image transfer belt unit.
6		The problem has been eliminated through the checks of steps up to 5.	NO	Change IU. → Change PH unit. → Change High voltage unit (Image transfer, neutralizing).

18.3.18 Printer monocolor: uneven density in main scan direction

A. Typical faulty images

4036fs4046c0

4036fs4047c0

B. Troubleshooting procedure

Step	Section	Check item	Result	Action
1	Imaging unit	The surface of the PC drum is scratched.	YES	Change imaging unit.
2		Dirty on the outside.	YES	Clean.
3	PH unit	The surface of the PH window is dirty.	YES	Clean with cleaning jig.
4	Image transfer belt unit	Image transfer belt unit makes positive contact with plates on rails.	NO	Check and correct contacts.
5		Cam gear operates properly.	NO	Change image transfer belt unit.
6		The problem has been eliminated through the checks of steps up to 5.	NO	Change imaging unit. → Change PH unit. → Change high voltage unit (Image transfer, neutralizing).

18.3.19 Printer monocolor: low image density

A. Typical faulty images

4036fs4036c0

B. Troubleshooting procedure

Step	Section	Check item	Result	Action
1	State Confirm → Table Number (Service Mode)	Check data for Vg and Vdc. Color Vdc: around 400 V Vg : around 500 V Black Vdc: around 400 V Vg : around 500 V	NO	Go to next step.
2	State Confirmation → Level History 1 (Service Mode)	Check TCR data.	NO	Go to next step.
3		IDC output value is around 4.3 V.	NO	Clean IDC sensor. Check image transfer belt for damage.
4	Level history data check results	Low TCR and low Vg and Vdc	YES	Go to step 8.
5		Low TCR and high Vg and Vdc	YES	Go to step 13.
6		TCR falling within specified range and low Vg and Vdc	YES	Go to step 8.
7		TCR falling within specified range and high Vg and Vdc	YES	Go to step 13.
8	Imaging unit	Dirty on the outside.	YES	Clean.
9	PH unit	The surface of the PH window is dirty.	YES	Clean with cleaning jig.
10	TCR sensor window	The color TCR sensor window on the LED assy is dirty.	YES	Clean.
11	Image transfer belt unit	Image transfer belt unit makes positive contact with plates on rails.	NO	Check and correct contacts.
12		Cam gear operates properly.	NO	Change image transfer belt unit.
13	Hopper unit	Connectors are loose.	YES	Reconnect.
14		Gear is cracked.	YES	Change gear.
15	Image Process Adjustment → TCR Toner Supply (Service Mode)	Toner is properly supplied when TCR toner supply is run.	NO	Go to next step.

Step	Section	Check item	Result	Action
16	Image Process Adjustment →Gradation Adjust (Service Mode)	"Conv. Value" falls within the specified range as checked through gradation adjust. Dark: 0 ± 100 Highlight = 0 ± 60	YES	Go to step 19.
17	Image Process Adjustment → D Max Density (Service Mode)	The problem has been eliminated through the adjust of D Max.	NO	Go to next step.
18	Image Process Adjustment → Stabilizer → Reset + Stabilizer (Service Mode)	After the Reset + Stabilizer sequence has been completed, run gradation adjust.	NO	Go to next step.
19		The problem has been eliminated through the checks of steps up to 18.	NO	Change imaging unit. → Change printer control board → Change PH unit. → Change high voltage unit (Image transfer, neutralizing).

18.3.20 Printer monocolor: gradation reproduction failure

A. Typical faulty images

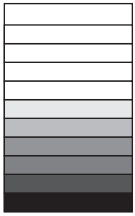
4036fs4048c0

4036fs4049c0

B. Troubleshooting procedure

Step	Section	Check item	Result	Action
1	Photo/density	Original type and screen pattern are selected properly.	NO	Change screen pattern.
2	Imaging unit	Dirty on the outside.	YES	Clean.
3	PH unit	The surface of the PH window is dirty.	YES	Clean with cleaning jig.
4	TCR sensor window	TCR sensor window is dirty.	YES	Clean.
5	State Confirmation → Level History 1 (Service Mode)	IDC output value is around 4.3 V.	NO	Clean IDC sensor. Check image transfer belt for damage.
6	Image Process Adjustment →Gradation Adjust (Service Mode)	“Conv. Value” falls within the specified range as checked through gradation adjust. Dark: 0 ± 100 Highlight = 0 ± 60	YES	Go to step 9.
7	Image Process Adjustment → D Max Density (Service Mode)	The problem has been eliminated through the adjust of D Max.	NO	Go to next step.
8	Image Process Adjustment → Stabilizer → Reset + Stabilizer (Service Mode)	After the Reset + Stabilizer sequence has been completed, run gradation adjust;	NO	Go to next step.
9		The problem has been eliminated through the checks of steps up to 8.	NO	Change imaging unit. → Change printer control board → Change PH unit. → Change high voltage unit (Image transfer, neutralizing).

18.3.21 Printer monocolor: foggy background

A. Typical faulty images

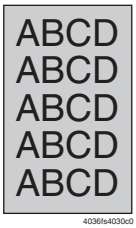

B. Troubleshooting procedure

Step	Section	Check item	Result	Action
1	State Confirmation → Table Number (Service Mode)	Check data for Vg and Vb. Color Vdc: around 400 V Vg : around 500 V Black Vdc: around 400 V Vg : around 500 V	NO	Go to next step.
2	State Confirmation → Level History 1 (Service Mode)	Check TCR data.	NO	Go to next step.
3		IDC output value is around 4.3 V.	NO	Clean IDC sensor. Check transfer belt for damage.
4	Level history data check results	Low TCR and low Vg and Vdc	YES	Go to step 8.
5		Low TCR and high Vg and Vdc	YES	Go to step 11.
6		TCR falling within specified range and low Vg and Vdc	YES	Go to step 8.
7		TCR falling within specified range and high Vg and Vdc	YES	Go to step 11.
8	Imaging unit	Dirty on the outside.	YES	Clean.
9	PH unit	The surface of the PH window is dirty.	YES	Clean with cleaning jig.
10	TCR sensor window	The color TCR sensor window is dirty.	YES	Clean.
11	Image Process Adjustment → Background Voltage Margin (Service Mode)	The problem is eliminated after background voltage margin has been adjusted.	NO	Go to next step.
12	Image Process Adjustment →Gradation Adjust (Service Mode)	“Conv. Value” falls within the specified range as checked through gradation adjust. Dark: 0 ± 100 Highlight = 0 ± 60	YES	Go to step 15.
13	Image Process Adjustment → D Max Density (Service Mode)	The problem has been eliminated through the adjust of D Max.	NO	Go to next step.

Step	Section	Check item	Result	Action
14	Image Process Adjustment → Stabilizer → Reset + Stabilizer (Service Mode)	After the Reset + Stabilizer sequence has been completed, run gradation adjust.	NO	Go to next step.
15		The problem has been eliminated through the checks of steps up to 14.	NO	Change imaging unit. → Change printer control board → Change PH unit. → Change high voltage unit (Image transfer, neutralizing).

18.3.22 Printer monocolor: void areas, white spots

A. Typical faulty images

Void areas

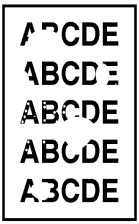

4036fs4050c0

White spots

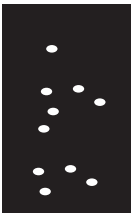

4036fs4051c0

B. Troubleshooting procedure

Step	Section	Check item	Result	Action
1	Image Check	There are void areas at the front side or high density section.	YES	See P.512
2		There is void area at the rear side section.	YES	Perform [Transfer Adjust] of [Image Process Adjustment] under Service Mode.
3	Imaging unit	The surface of the PC drum is scratched.	YES	Change imaging unit.
4		Dirty on the outside.	YES	Clean.
5	Toner cartridge	Foreign matter or caked toner in the toner cartridge.	YES	Remove foreign matter.
6	Installation enviroment	Is the atmospheric pressure at the installation site low?	YES	Make the following adjustment: [Service Mode] → [Image Process Adjustment] → [Dev. Bias Choice].

18.3.23 Printer monocolor: colored spots

A. Typical faulty images

Colored spots

4036fs4052c0

B. Troubleshooting procedure

Step	Section	Check item	Result	Action
1	Imaging unit	Developing bias contact terminal makes good connection.	NO	Clean contact terminal and check terminal position.
2		The surface of the PC drum is scratched.	YES	Change imaging unit.
3		Dirty on the outside.	YES	Clean.

18.3.24 Printer monocolor: blurred image

A. Typical faulty images

Blurred image

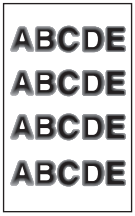

4036fs4031c0

B. Troubleshooting procedure

Step	Section	Check item	Result	Action
1	PH unit	The surface of the PH window is dirty.	YES	Clean with cleaning jig.
2	Imaging unit	Dirty on the outside.	YES	Clean.
3		The problem has been eliminated through the checks of steps up to 2.	NO	Change imaging unit. → Change PH unit.

18.3.25 Printer monocolor: blank copy, black copy

A. Typical faulty images

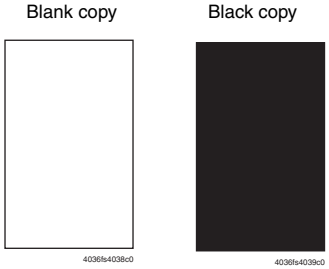

B. Troubleshooting procedure

Step	Section	Check item	Result	Action
1	Image check	A blank copy occurs.	YES	Check PH unit connector for proper connection.
2	Imaging unit	Coupling of IU drive mechanism is installed properly.	NO	Check and correct drive transmitting coupling. Change IU.
3		The PC drum charge corona voltage contact or PC drum ground contact of the imaging unit is connected properly.	NO	Check, clean, or correct the contact.
4	High voltage unit (Image transfer, neutralizing)	Connector is connected properly.	NO	Reconnect.
5		The problem has been eliminated through the check of step 4.	NO	Change high voltage unit (Image transfer, neutralizing). → Change printer control board → Change PH unit.

18.3.26 Printer monocolor: uneven image

A. Typical faulty images

B. Troubleshooting procedure

Step	Section	Check item	Result	Action
1	Toner cartridge	The toner cartridge of every color is surely installed.	NO	Re-install it.
2	PH unit	The PH unit is surely installed.	NO	Re-install it.
3		Uneven pitch occurs in 3.0 mm pitch.	YES	Replace the PH unit holder.
4	Toner cartridge	There is any stain or breakage on the drive section of the toner cartridge.	YES	Clean/replace the toner cartridge.
5	Imaging unit	There is any stain, damage or abrasion on the PC drum.	YES	Replace the imaging unit.
6	Transfer roller	There is any stain, damage, deformation or abrasion on the transfer roller.	YES	Replace the transfer roller.
7	Fusing unit	There is any stain, damage, deformation or abrasion on the roller and drive section of the fusing unit.	YES	Replace the fusing unit.
8		The problem has been eliminated through the check of step 7.	NO	Replace the image transfer belt unit.

18.3.27 Printer 4-color: white lines in sub scan direction, white bands in sub scan direction, colored lines in sub scan direction, and colored bands in sub scan direction

A. Typical faulty images

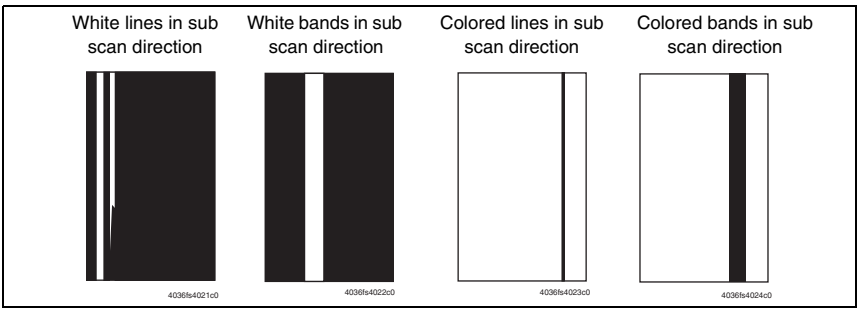

B. Troubleshooting procedure

Step	Section	Check item	Result	Action
1	Image check	A white line or colored line in sub scan direction.	YES	Clean the comb electrode by moving the comb electrode cleaning lever.
2	Image transfer belt unit	Fingerprints, oil, or other foreign matter is evident on the image transfer belt.	YES	Clean with specified solvent. (See Maintenance.)
3		Image transfer belt is dirty or scratched.	YES	Clean dirty belt with a soft cloth. Change Image transfer belt unit if belt is damaged.
4		Cleaning blade is not effective in removing toner completely.	YES	Clean cleaning blade. Change Image transfer belt unit.
5	2nd image transfer roller unit	Image transfer roller is dirty or scratched.	YES	Change 2nd image transfer roller unit.
6	Paper path	There is foreign matter on paper path.	YES	Remove foreign matter.
7		Image transfer paper separator fingers are damaged or dirty.	YES	Clean or change.
8	Fusing unit	Fusing entrance guide plate is dirty or damaged.	YES	Clean. Change fusing unit.
9		Fusing paper separator fingers are dirty.	YES	Clean.
10		The problem has been eliminated through the checks of steps up to 9.	NO	Change printer control board

18.3.28 Printer 4-color: white lines in main scan direction, white bands in main scan direction, colored lines in main scan direction, and colored bands in main scan direction

A. Typical faulty images

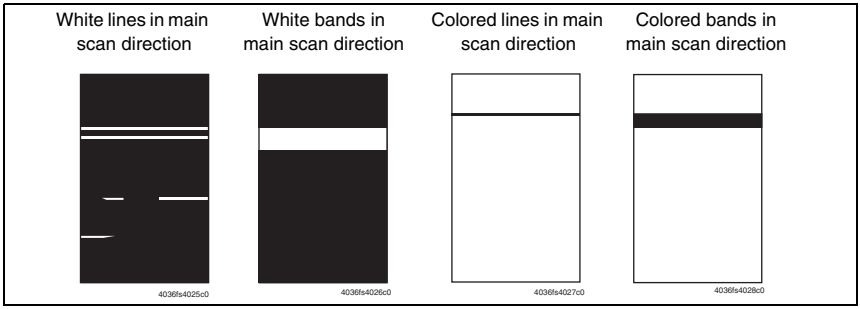

B. Troubleshooting procedure

Step	Section	Check item	Result	Action
1	Image transfer belt unit	Fingerprints, oil, or other foreign matter is evident on the Image transfer belt.	YES	Clean with specified solvent. (See Maintenance.)
2		Image transfer belt is dirty or scratched.	YES	Clean dirty belt with a soft cloth. Change image transfer belt unit if belt is damaged.
3		Cleaning blade is not effective in removing toner completely.	YES	Clean cleaning blade. change image transfer belt unit.
4	2nd image transfer roller unit	Image transfer roller is dirty or scratched.	YES	Change 2nd image transfer roller unit.
5	Paper path	There is foreign matter on paper path.	YES	Remove foreign matter.
6		Image transfer paper separator fingers are damaged or dirty.	YES	Clean or change.
7	Fusing unit	Fusing entrance guide plate is dirty or damaged.	YES	Clean. Change fusing unit.
8		Fusing paper separator fingers are dirty.	YES	Clean.
9	Neutralizing brush	The resistance values between the neutralizing brush and the ground terminal is not ∞.	NO	Check the contact. modify. Change neutralizing brush.
10		The problem has been eliminated through the checks of steps up to 9.	NO	Change printer control board

18.3.29 Printer 4-color: uneven density in sub scan direction

A. Typical faulty images

B. Troubleshooting procedure

Step	Section	Check item	Result	Action
1	Image transfer belt unit	Fingerprints, oil, or other foreign matter is evident on the image transfer belt.	YES	Clean with specified solvent. (See Maintenance.)
2		Image transfer belt is dirty or scratched.	YES	Clean dirty belt with a soft cloth. Change image transfer belt unit if belt is damaged.
3		Terminal is dirty.	YES	Clean.
4	2nd image transfer roller unit	Image transfer roller is installed properly.	NO	Reinstall.
5		Image transfer roller is dirty or scratched.	YES	Change 2nd image transfer roller unit.
6		The problem has been eliminated through the checks of steps up to 5.	NO	Change image transfer belt unit.

18.3.30 Printer 4-color: uneven density in main scan direction

A. Typical faulty images

4036fs4046c0

4036fs4047c0

B. Troubleshooting procedure

Step	Section	Check item	Result	Action
1	Image transfer belt unit	Fingerprints, oil, or other foreign matter is evident on the Image transfer belt.	YES	Clean with specified solvent. (See Maintenance.)
2		Image transfer belt is dirty or scratched.	YES	Clean dirty belt with a soft cloth. Change image transfer belt unit if belt is damaged.
3		Terminal is dirty.	YES	Clean.
4	2nd image transfer roller unit	Image transfer roller is installed properly.	NO	Reinstall.
5		Image transfer roller is dirty or scratched.	YES	Change 2nd image transfer roller unit.
6		The problem has been eliminated through the checks of steps up to 5.	NO	Change image transfer belt unit. → Change high voltage unit (Image transfer, neutralizing).

18.3.31 Printer 4-color: low image density

A. Typical faulty images

B. Troubleshooting procedure

Step	Section	Check item	Result	Action
1	Paper	Paper is damp.	YES	Change paper to one just unwrapped from its package. Install paper dehumidifying heater.
2	Image transfer belt unit	Terminal is dirty.	YES	Clean.
3	2nd image transfer roller unit	Image transfer roller is installed properly.	NO	Reinstall.
4		Image transfer roller is dirty or scratched.	NO	Change 2nd image transfer roller unit.
5	IDC sensor	Sensor is dirty.	YES	Clean with blower brush.
6	Image Process Adjustment →Gradation Adjust (Service Mode)	“Conv. Value” falls within the specified range as checked through gradation adjust. Dark: 0 ± 100 Highlight: 0 ± 60	YES	Go to step 9.
7	Image Process Adjustment → D Max Density (Service Mode)	The problem has been eliminated through the adjust of D Max Density.	NO	Go to next step.
8	Image Process Adjustment → Stabilizer → Reset + Stabilizer (Service Mode)	After the Reset + Stabilizer sequence has been completed, run gradation adjust.	NO	Go to next step.
9		The problem has been eliminated through the checks of steps up to 8.	NO	Change image transfer belt unit. → Change printer control board → Change high voltage unit (Image transfer, neutralizing).

18.3.32 Printer 4-color: poor color reproduction

A. Typical faulty images

4036fs4058c0

B. Troubleshooting procedure

Step	Section	Check item	Result	Action
1	Paper	Paper is damp.	YES	Change paper to one just unwrapped from its package. Install paper dehumidifying heater.
2	Image transfer belt unit	Terminal is dirty.	YES	Clean.
3	2nd image transfer roller unit	Image transfer roller is installed properly.	NO	Reinstall.
4		Image transfer roller is dirty or scratched.	NO	Change image transfer roller unit.
5	IDC sensor	Sensor is dirty.	YES	Clean with blower brush.
6	Image Process Adjustment → Gradation Adjust (Service Mode)	"Conv. Value" falls within the specified range as checked through gradation adjust. Dark: 0 ± 100 Highlight: 0 ± 60	YES	Go to step 9.
7	Image Process Adjustment →D Max Density (Service Mode)	The problem has been eliminated through the adjust of D Max Density.	NO	Go to next step.
8	Image Process Adjustment → Stabilizer → Reset + Stabilizer (Service Mode)	After the Reset + Stabilizer sequence has been completed, run gradation adjust.	NO	Go to next step.
9		The problem has been eliminated through the checks of steps up to 8.	NO	Change image transfer belt unit. → Change printer control board → Change high voltage unit (Image transfer, neutralizing).

18.3.33 Printer 4-color: incorrect color image registration

A. Typical faulty images

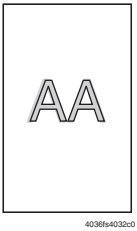

B. Troubleshooting procedure

Step	Section	Check item	Result	Action
1	Warning display	The maintenance call mark is displayed on the panel.	YES	Take action according to the warning code shown on the state confirm screen.
2	Machine condition	Vibration is given to the machine after main power switch has been turned ON.	YES	Turn off the main power switch and turn it on again more than 10 seconds after.
3	Image transfer belt unit	Fingerprints, oil, or other foreign matter is evident on the image transfer belt.	YES	Clean with specified solvent. (See Maintenance.)
4		Image transfer belt is dirty or scratched.	YES	Clean dirty belt with a soft cloth. Change image transfer belt unit if belt is damaged.
5		Drive coupling to the machine is dirty.	YES	Clean.
6	Imaging unit	The surface of the PC drum is scratched.	YES	Change imaging unit.
7	2nd image transfer roller unit	Image transfer roller is installed properly.	NO	Reinstall.
8		Image transfer roller is dirty or scratched.	YES	Change 2nd image transfer roller unit.
9	Machine → Fusing Transport Speed (Service Mode)	Brush effect or blurred image occurs.	YES	Readjust fusing transport speed.
10	Machine → Color registration Adjustment (Service Mode)	Check the specific color in which color shift occurs.	YES	Perform “Color registration Adjustment.” If color shift is not corrected even with a correction of ± 1 dot, go to next step.
11		The problem has been eliminated through the checks of steps up to 10.	NO	Change image transfer belt unit. → Change printer control board

18.3.34 Printer 4-color: void areas, white spots

A. Typical faulty images

Void areas

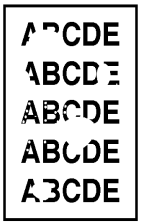

4036fs4050c0

White spots

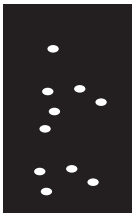

4036fs4051c0

B. Troubleshooting procedure

Step	Section	Check item	Result	Action
1	Image check	There are void areas at the front side or high density section.	YES	P.527
2		There are void areas in the trailing edge.	YES	Perform [Transfer Adjust] of [Image Process Adjustment] under Service Mode.
3	Transfer belt unit	Fingerprints, oil, or other foreign matter is evident on the transfer belt.	YES	Clean with specified solvent. (See Maintenance.)
4		Transfer belt is dirty or scratched.	YES	Clean dirty belt with a soft cloth. Change transfer belt unit if belt is damaged.
5	2nd image transfer roller unit	Transfer roller is dirty or scratched.	YES	Change 2nd image transfer roller unit.
6		Charge neutralizing cloth is not separated and ground terminal is connected properly.	NO	Correct or change.
7	Paper path	There is foreign matter on paper path.	YES	Remove foreign matter.
8		Pre-image transfer guide plate is damaged or dirty.	YES	Clean or change.
9		The problem has been eliminated through the checks of steps up to 8.	NO	Change image transfer belt unit.

18.3.35 Printer 4-color: colored spots

A. Typical faulty images

B. Troubleshooting procedure

Step	Section	Check item	Result	Action
1	Imaging unit	The surface of the PC drum is scratched.	YES	Change imaging unit.
2	Image transfer belt unit	Fingerprints, oil, or other foreign matter is evident on the image transfer belt.	YES	Clean with specified solvent. (See Maintenance.)
3		Image transfer belt is dirty or scratched.	YES	Clean dirty belt with a soft cloth. Change image transfer belt unit if belt is damaged.
4	2nd image transfer roller unit	Image transfer roller is dirty or scratched.	YES	Change 2nd image transfer roller unit.
5	Paper path	There is foreign matter on paper path.	YES	Remove foreign matter.
6	Fusing unit	Fusing belt is dirty or scratched.	YES	Change fusing unit.
7		The problem has been eliminated through the checks of steps up to 6.	NO	Change image transfer belt unit.

18.3.36 Printer 4-color: poor fusing performance, offset

A. Typical faulty images

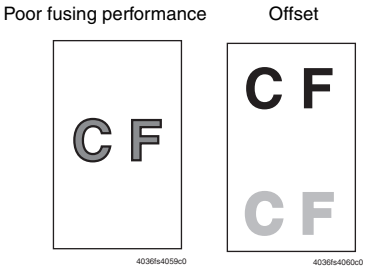

B. Troubleshooting procedure

Step	Section	Check item	Result	Action
1	Paper	Paper type does not match.	YES	Change the setting.
2	Machine→ Fusing Temperature (Service Mode)	Changing fusing temperature eliminates the problem of poor fusing performance and offset.	YES	Readjust fusing temperature.
3		The problem has been eliminated through the checks of steps up to 2.	NO	Change fusing unit.

18.3.37 Printer 4-color: brush effect, blurred image

A. Typical faulty images

Brush effect

4036fs4061c0

Blurred image

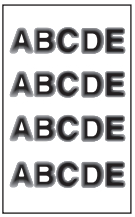

4036fs4031c0

B. Troubleshooting procedure

Step	Section	Check item	Result	Action
1	Paper	Paper is damp.	YES	Change paper to one just unwrapped from its package. Install paper dehumidifying heater.
2		Paper type does not match.	YES	Change the setting.
3	Fusing unit	Fusing entrance guide plate is dirty.	YES	Clean.
4		Fusing belt is dirty or scratched.	YES	Change fusing unit.
5	Machine → Fusing Transport Speed (Service Mode)	Changing fusing speed eliminates the problem of brush effect and blurred image.	YES	Readjust fusing transport speed.

18.3.38 Printer 4-color: back marking

A. Typical faulty images

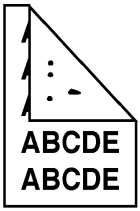

4036fs4062c0

4036fs4063c0

B. Troubleshooting procedure

Step	Section	Check item	Result	Action
1	2nd image transfer roller unit	Image transfer roller is scratched or dirty.	YES	Change 2nd image transfer roller unit.
2	Paper path	There is foreign matter on paper path.	YES	Remove foreign matter.
3	Fusing unit	Fusing entrance guide plate is scratched or dirty.	YES	Clean or change.
4		Lower fusing roller is scratched or dirty.	YES	Change fusing unit.
5	Transfer belt unit	Fingerprints, oil, or other foreign matter is evident on the Transfer Belt.	YES	Clean with specified solvent. (See Maintenance.)
6		The problem has been eliminated through the checks of steps up to 5.	NO	Change image transfer belt unit. → Change high voltage unit (Image transfer, neutralizing).

18.3.39 Printer 4-color: uneven image

A. Typical faulty images

B. Troubleshooting procedure

Step	Section	Check item	Result	Action
1	Toner cartridge	The Toner cartridge of every color is surely installed.	NO	Re-install it.
2	PH unit	The PH unit is surely installed.	NO	Re-install it.
3		Uneven pitch occurs in 3.0 mm pitch.	YES	Replace the PH unit holder.
4	Toner cartridge	There is any stain or breakage on the drive section of the toner cartridge.	YES	Clean/replace the toner cartridge.
5	Imaging unit	There is any stain, damage or abrasion on the PC drum.	YES	Replace the imaging unit.
6	Transfer roller	There is any stain, damage, deformation or abrasion on the transfer roller.	YES	Replace the transfer roller.
7	Fusing unit	There is any stain, damage, deformation or abrasion on the roller and drive section of the fusing unit.	YES	Replace the fusing unit.
8		The problem has been eliminated through the check of step 7.	NO	Replace the image transfer belt unit.

Appendix

19. Parts layout drawing

19.1 Main unit

19.1.1 IR section

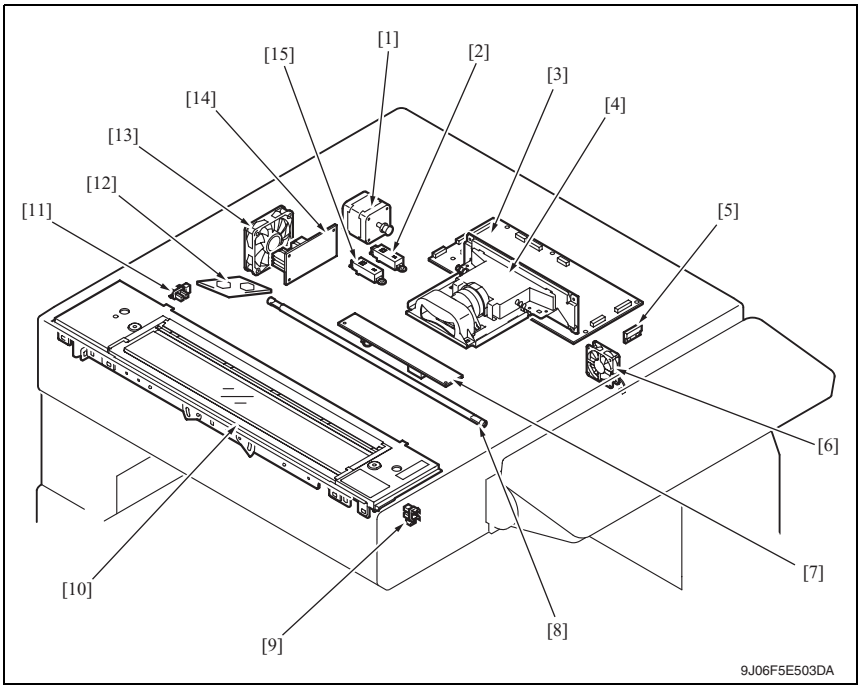

[1]	Scanner motor (M201)	[9]	Home sensor (PC201)
[2]	Original size detection 1 sensor (PC203)	[10]	Original glass moving unit
[3]	Image processing board (IPB)	[11]	20 degree sensor (PC202)
[4]	CCD board (CCDB)	[12]	Original glass position control board (OGPCB) *1
[5]	Original cover/DF open sensor (S201)	[13]	Scanner cooling fan motor (M202)
[6]	Exposure lamp cooling fan motor (M203)	[14]	Scanner motor drive board (SCADB)
[7]	Inverter board (INVB)	[15]	Original size detection 2 sensor (PC204)
[8]	Exposure lamp (FL201)		

*1: Only when the optional automatic document feeder (DF-608) is mounted.

19.1.2 Engine section

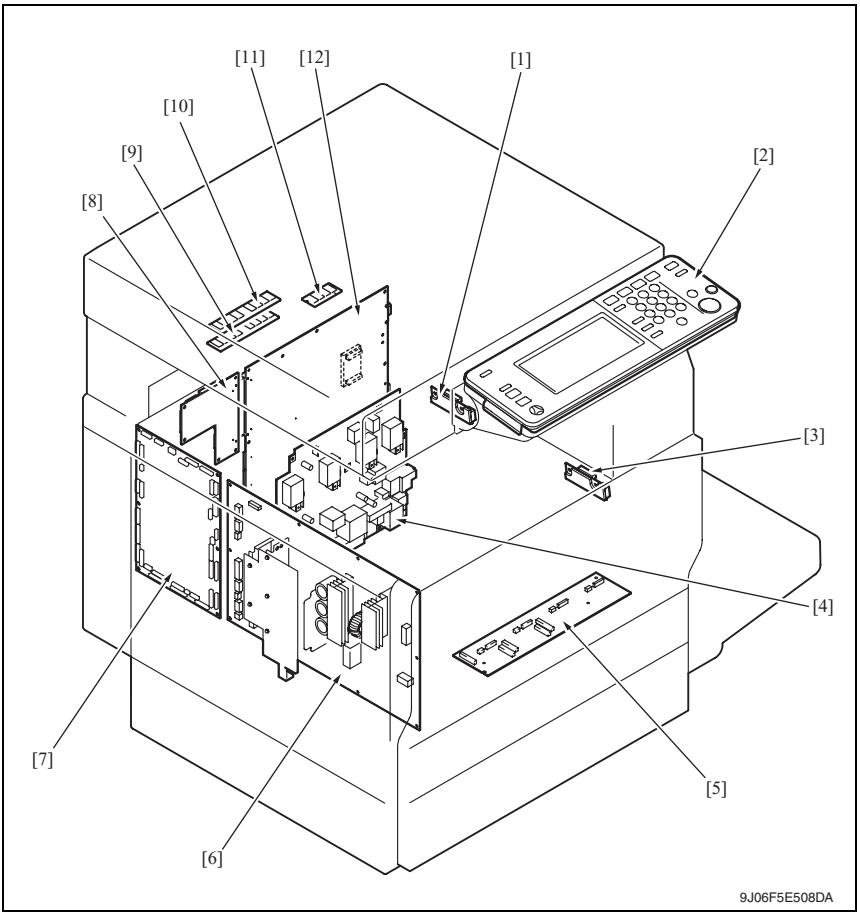

[1]	IDC registration sensor/R (SE2)	[7]	Mechanical control board (MFPB)
[2]	Control panel (UN201)	[8]	Relay board (REYB)
[3]	IDC registration sensor/F (SE1)	[9]	DIMM/1 (WORK1)
[4]	High voltage unit (HV1)	[10]	DIMM/0 (WORK0)
[5]	PH interface board (PHICB)	[11]	SODIMM/0 (SODIMM/0)
[6]	DC power supply (DCPU)	[12]	Printer control board (PRCB)

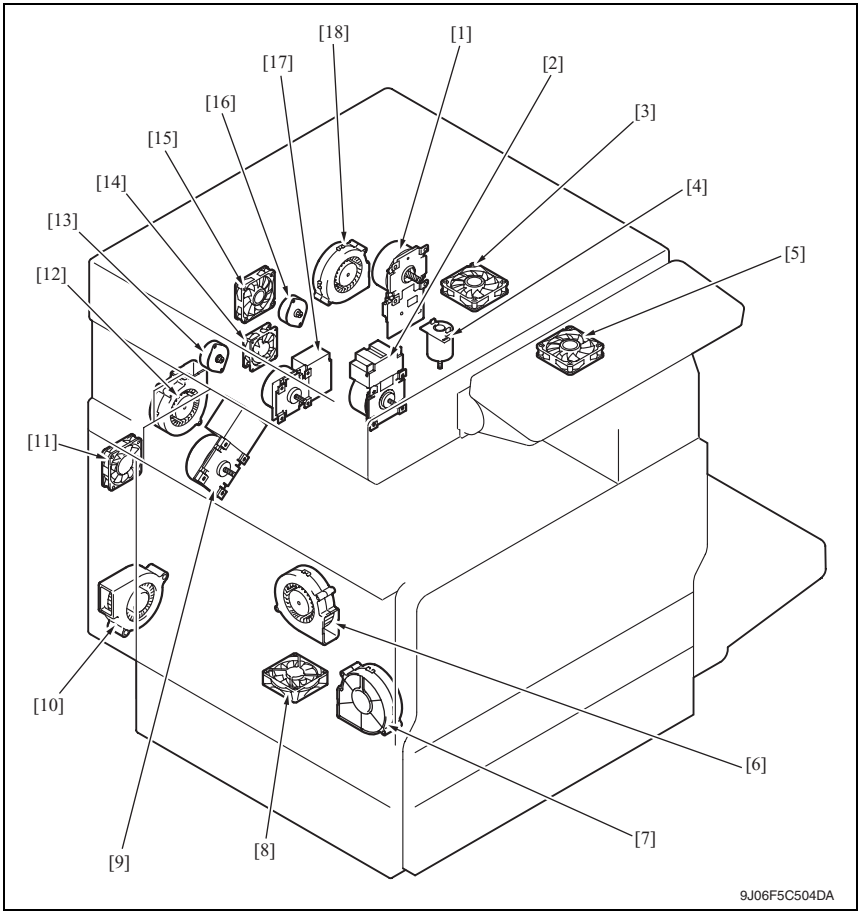

[1]	Fusing drive motor (M4)	[10]	Ozone ventilation fan motor (M14)
[2]	Main motor (M1)	[11]	Power supply cooling fan motor/2 (M9)
[3]	Fusing cooling fan motor/1 (M11)	[12]	Cooling fan motor/1 (M12)
[4]	Fusing pressure roller pressure/retraction motor (M24)	[13]	Toner supply motor Y/M (M6)
[5]	Fusing cooling fan motor/3 (M15)	[14]	Printer control board cooling fan (M25)
[6]	Cooling fan motor/3 (M23)	[15]	Cooling fan motor/2 (M22)
[7]	Toner suction fan motor (M17)	[16]	Toner supply motor C/K (M7)
[8]	Power supply cooling fan motor/1 (M8)	[17]	Color PC drum motor (M2)
[9]	Color developing motor (M3)	[18]	Fusing cooling fan motor/2 (M13)

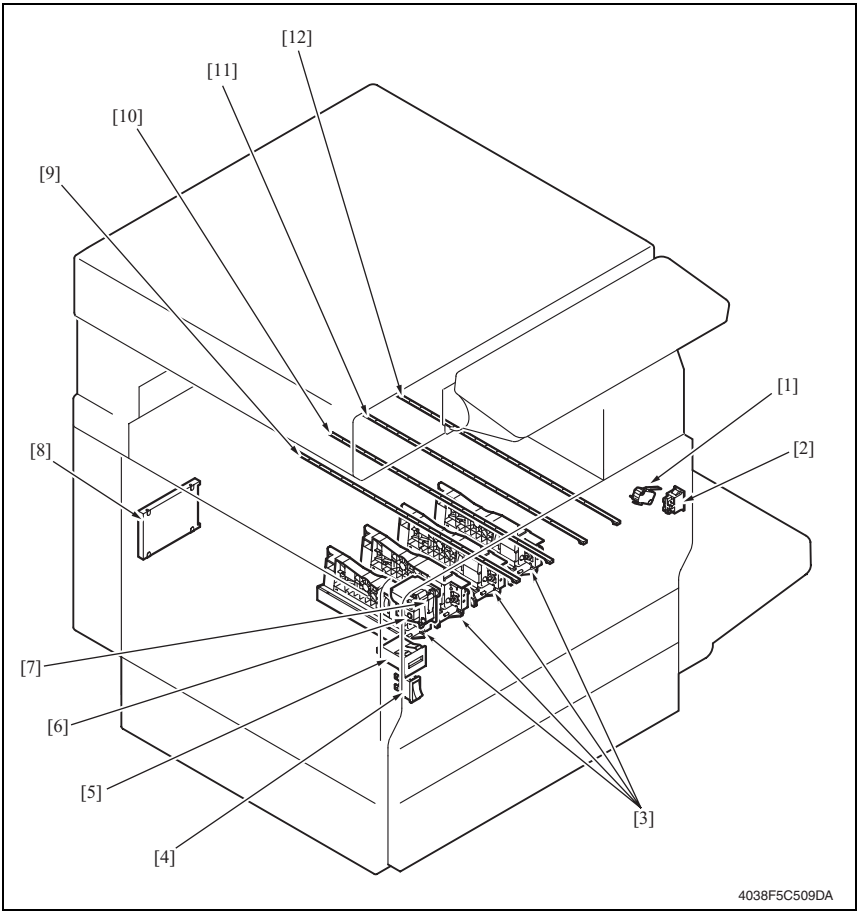

[1]	Right door switch (S5)	[7]	Front door switch/2 (S4)
[2]	Primary interlock switch (S2)	[8]	Hard disk drive (HDD)
[3]	PH unit	[9]	Main erase lamp/Y (LA4)
[4]	Main power switch (S1)	[10]	Main erase lamp/M (LA3)
[5]	Total counter (CNT1)	[11]	Main erase lamp/C (LA2)
[6]	Front door switch/1 (S3)	[12]	Main erase lamp/K (LA1)

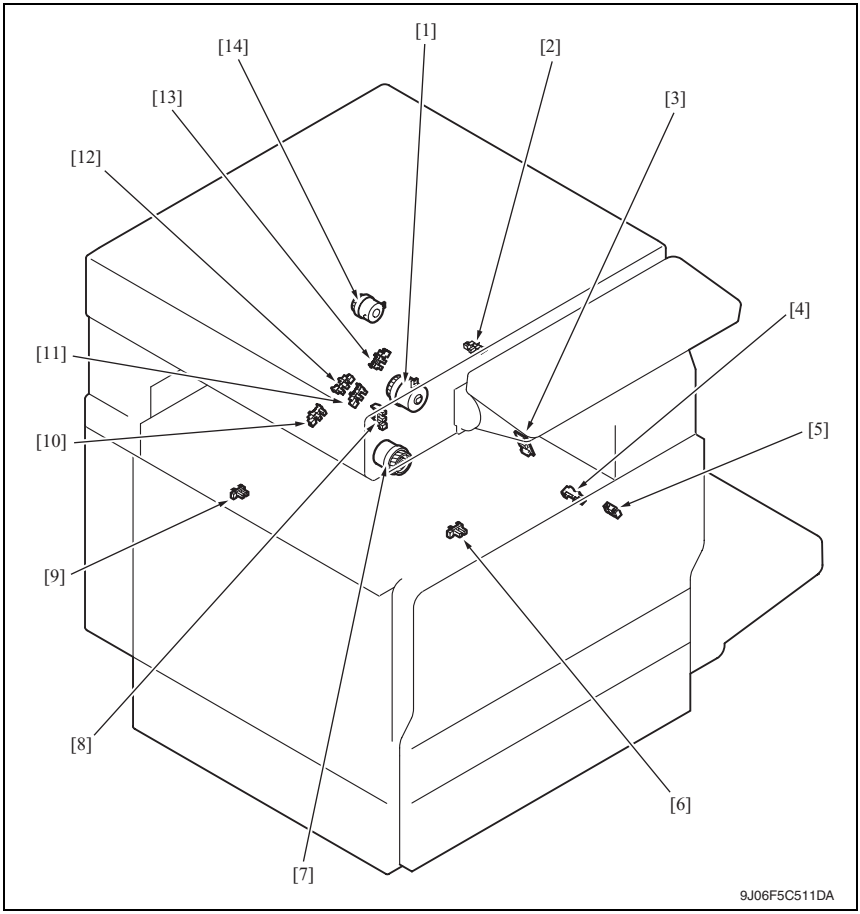

[1]	Developing clutch/K (CL4)	[8]	Fusing roller retraction (PC23)
[2]	Exit sensor (PC2)	[9]	Toner full sensor (PC8)
[3]	Temperature/humidity sensor (SE3)	[10]	Color PC drive main sensor (PC15)
[4]	Registration roller sensor (PC1)	[11]	Color PC drive sub sensor (PC17)
[5]	OHP sensor (PC4)	[12]	Black PC drive main sensor (PC16)
[6]	Transfer belt retraction sensor (PC6)	[13]	Black PC drive sub sensor (PC18)
[7]	Registration roller clutch (CL1)	[14]	1st image transfer pressure/retraction clutch (CL3)

19.1.3 Tray 1

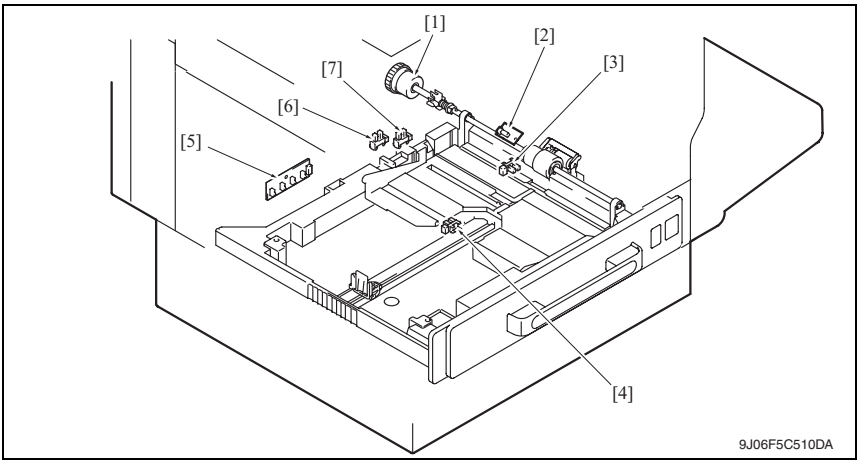

[1] Tray 1 paper feed clutch (CL2)
[2] Multi feed detection board (MFDTB)
[3] Tray 1 paper empty sensor (PC10-PC)
[4] Tray 1 CD paper size sensor (PC9-PC)
[5] Tray 1 paper size board (PSDTB)
[6] Tray 1 paper near empty sensor (PC11-PC)
[7] Tray 1 device detection sensor (PC12-PC)

19.1.4 Tray 2/multiple bypass tray

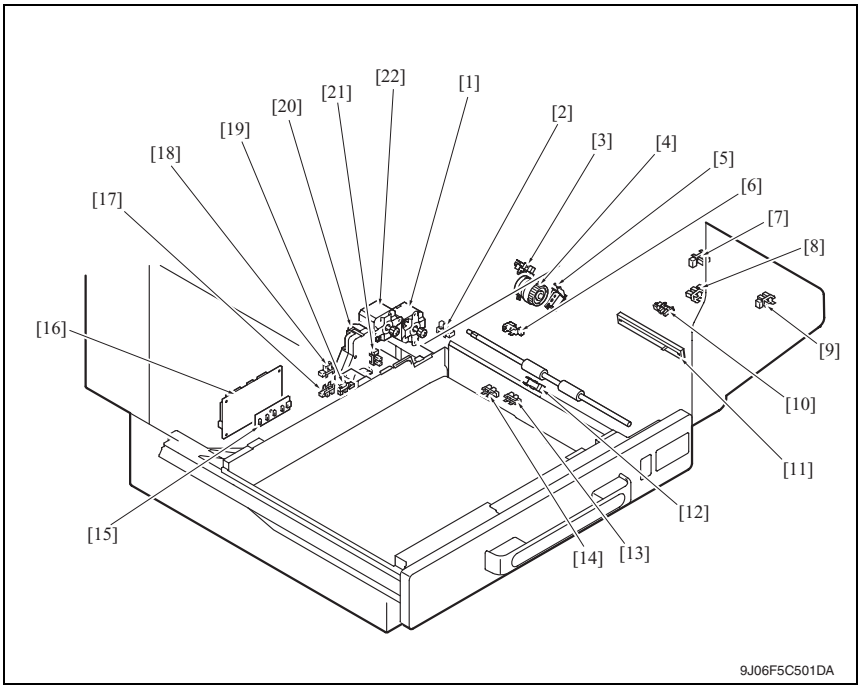

[1]	Tray 2 vertical transport motor (M2-PC)	[12]	Tray 2 take-up sensor (PC9-PC)
[2]	Tray 2 door set sensor (PC5-PC)	[13]	Tray 2 paper empty sensor (PC6-PC)
[3]	Bypass lift-up position sensor (PC14)	[14]	Tray 2 upper limit sensor (PC7-PC)
[4]	Bypass paper feed clutch (CL5)	[15]	Paper size detect board (PCDTB)
[5]	Bypass paper pick-up solenoid (SL2)	[16]	PC control board (PCDTB)
[6]	Tray 2 vertical transport sensor (PC8-PC)	[17]	Tray 2 CD paper size sensor/1 (PC4-PC)
[7]	Multi FD size 3 sensor (PC21)	[18]	Tray 2 device detection sensor (PC2-PC)
[8]	Multi FD size 1 sensor (PC19)	[19]	Tray2 CD paper size sensor/2 (PC3-PC)
[9]	Multi FD size 2 sensor (PC20)	[20]	Tray 2 lift-up motor (M3-PC)
[10]	Bypass paper empty (PC13)	[21]	Tray 1 paper near empty sensor (PC1-PC)
[11]	Paper width detection resistor (UN1)	[22]	Tray 2 paper feed motor (M1-PC)

19.2 Automatic duplex unit (AD-503)

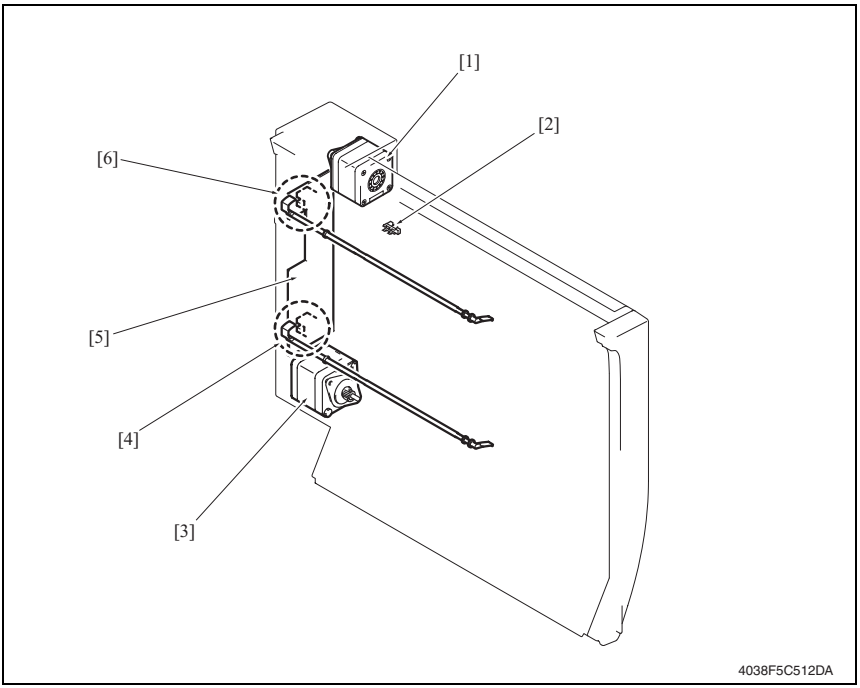

[1]	Duplex unit switchback motor (M1 DU)	[4]	Duplex unit transport sensor 2 (in PWB-A DU) (PC2 DU)
[2]	Duplex unit door set sensor (PCI DU)	[5]	Duplex control board (PWB-A DU)
[3]	Duplex unit transport motor (M2 DU)	[6]	Duplex unit transport sensor 1 (in PWB-A DU) (PC1 DU)

19.3 DF-608 (option)

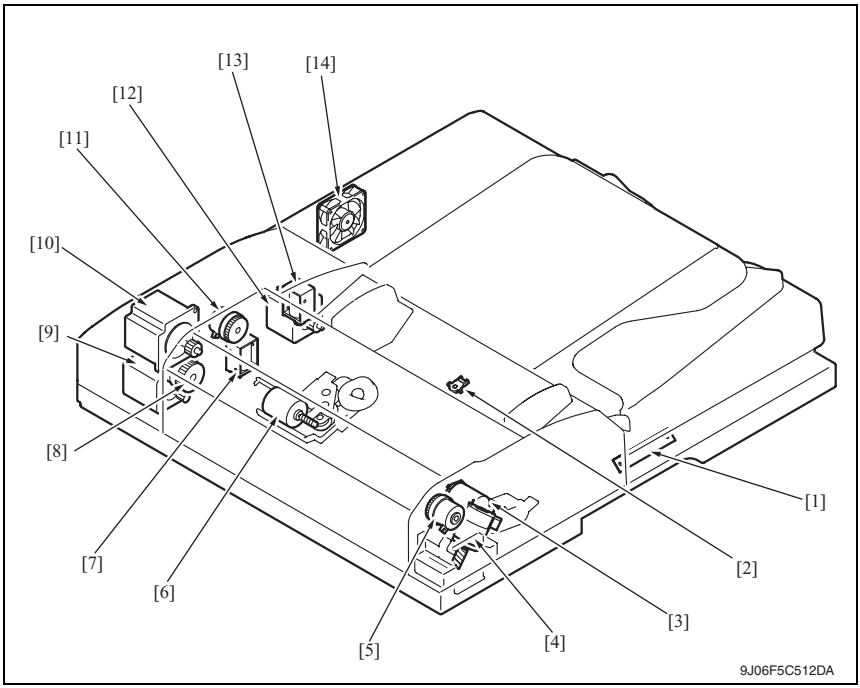

[1]	Jam indicator board (JAMIB)	[8]	Regist clutch (CL1)
[2]	Document width detection variable resistor (R1)	[9]	Reading motor (M1)
[3]	Switchback roller pressure/retraction motor (M5)	[10]	Take-up motor (M2)
[4]	Reading roller pressure/retraction motor (M4)	[11]	Take-up clutch (CL2)
[5]	Brake clutch (CL3)	[12]	Exit motor (M3)
[6]	Lift-up motor (M7)	[13]	Switch back solenoid (SL1)
[7]	Exit switch back solenoid (SL2)	[14]	Cooling fan (M6)

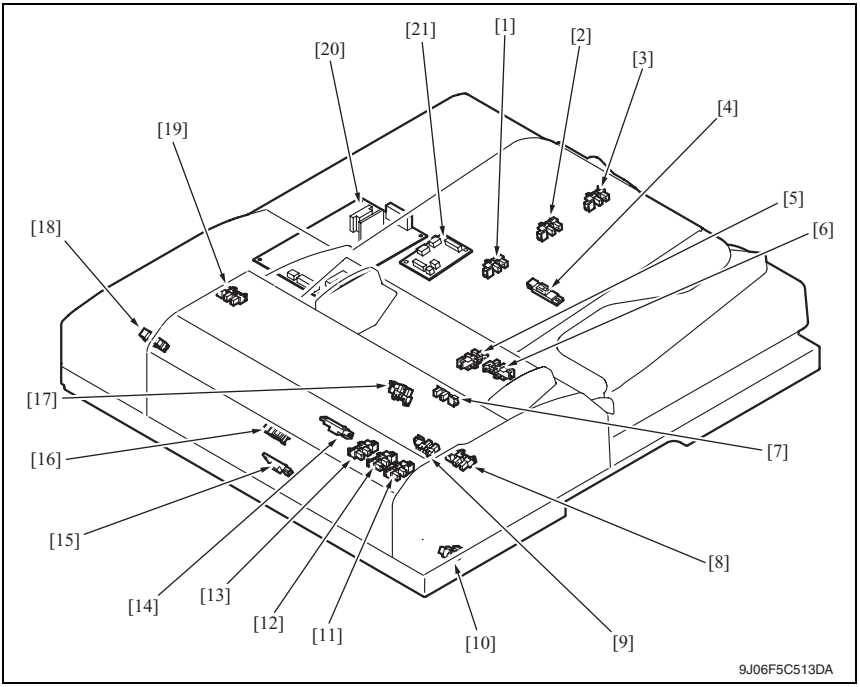

[1] Length sensor 1 (PC10)
[2] Length sensor 3 (PC12)
[3] Length sensor 4 (PC13)
[4] Length sensor 2 (PC11)
[5] Lift up upper sensor (PC16)
[6] Empty sensor (PC14)
[7] After separate sensor (PC4)
[8] Reverse roller sensor (PC7)
[9] Lift up lower sensor (PC15)
[10] Read roller sensor (PC6)
[11] Mixed sensor 3 (PC17)
[12] Mixed sensor 2 (PC18)
[13] Mixed sensor 1 (PC19)
[14] Reverse regist sensor (PC8)
[15] Before read sensor (PC9)
[16] Registration sensor (PC3)
[17] Eject sensor (PC5)
[18] Read open & close sensor (PC2)
[19] Feed open & close sensor (PC1)
[20] DF control board (DFCB)
[21] Document size detect board (DSDTB)

19.4 PC-103/PC-203 (option)

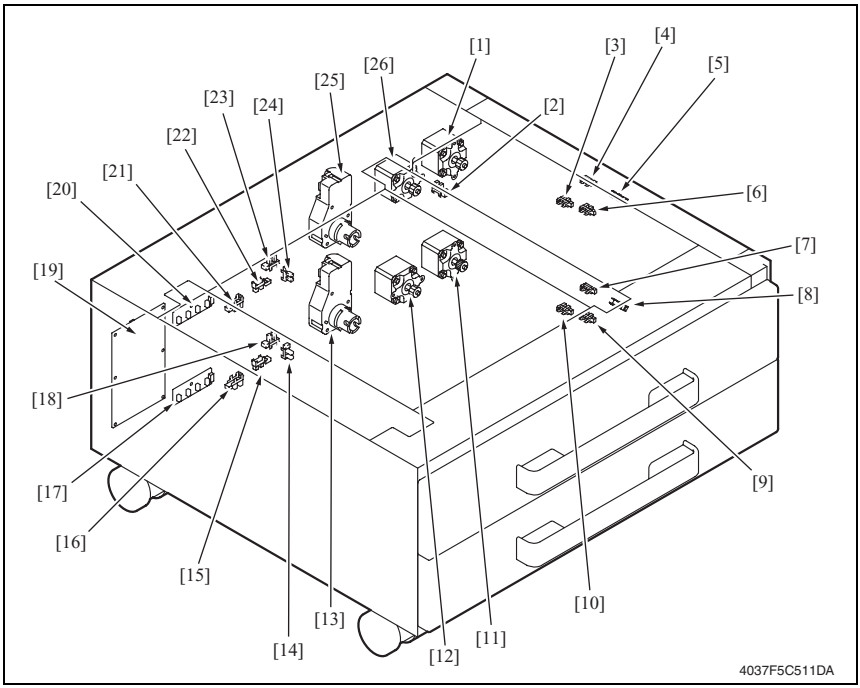

[1]	Tray 3 vertical transport motor (M120-PC)	[14]	Tray 4 near empty sensor (PC122-PC)
[2]	Tray 3 door set sensor (PC111-PC)	[15]	Tray 4 CD paper size sensor/2 (PC128-PC)
[3]	Tray 3 lift-up upper sensor (PC114-PC)	[16]	Tray 4 CD paper size Sensor/1 (PC127-PC)
[4]	Tray 3 vertical transport sensor (PC117-PC)	[17]	Tray 4 paper size board (PWB-I/(4) PC)
[5]	Tray 3 paper take-up sensor (PC116-PC)	[18]	Tray 4 device detection sensor (PC121-PC)
[6]	Tray 3 empty sensor (PC115-PC)	[19]	Control board (PWB-C2 PC)
[7]	Tray 4 vertical transport sensor (PC126-PC)	[20]	Tray 3 paper size board (PWB-I/(3) PC)
[8]	Tray 4 paper take-up sensor (PC125-PC)	[21]	Tray 3 CD paper size sensor/1 (PC118-PC)
[9]	Tray 4 empty sensor (PC124-PC)	[22]	Tray 3 CD paper size sensor 2 (PC119-PC)
[10]	Tray 4 lift-up upper sensor (PC123-PC)	[23]	Tray 3 device detection sensor (PC112-PC)
[11]	Tray4 vertical transport motor (M121-PC)	[24]	Tray 3 near empty sensor (PC113-PC)
[12]	Tray4 take-up motor (M123-PC)	[25]	Tray 3 lift-up motor (M124-PC)
[13]	Tray 4 lift-up motor (M125-PC)	[26]	Tray3 take-up motor (M122-PC)

19.5 PC-403 (option)

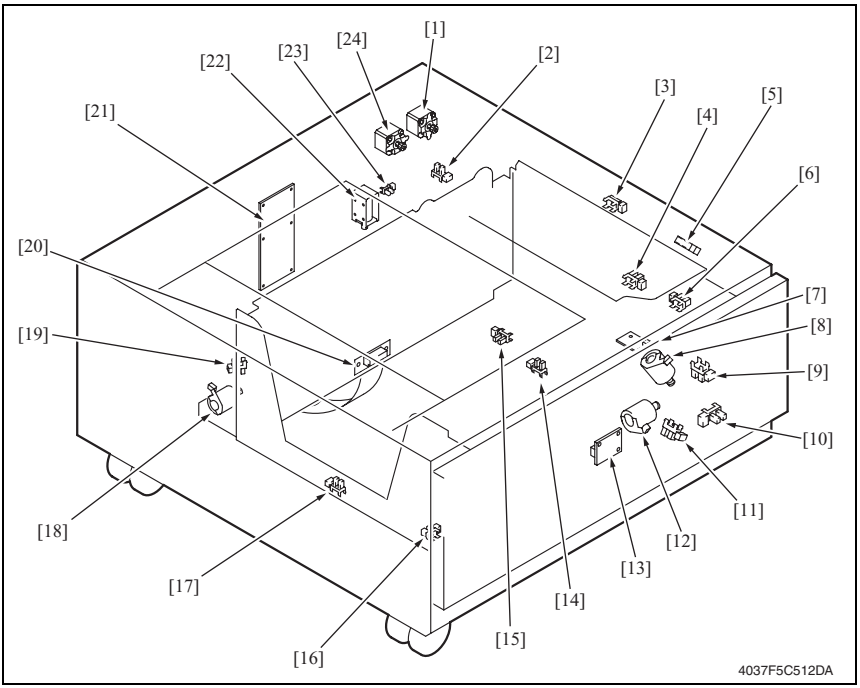

[1]	Vertical transport motor (M2-LCT)	[13]	Manual button down board (NU1-LCT)
[2]	Door set sensor (PC5-LCT)	[14]	Shift tray stop sensor (PC11-LCT)
[3]	Vertical transport sensor (PC2-LCT)	[15]	Lift-up lower sensor (PC13-LCT)
[4]	Lift-up upper sensor (PC4-LCT)	[16]	Shift tray empty sensor (PC9-LCT)
[5]	Paper take-up motor (PC1-LCT)	[17]	Shift tray home sensor (PC12-LCT)
[6]	Paper empty sensor (PC3-LCT)	[18]	Division board motor (M3-LCT)
[7]	Main tray empty sensor board (PWB-E LCT)	[19]	Division board position sensor (PC14-LCT)
[8]	Elevator motor (M5-LCT)	[20]	Motor connection board (PWB-N LCT)
[9]	Elevator motor pulse sensor (PC10-LCT)	[21]	Control board (PWB-C1 LCT)
[10]	Lower over run sensor (PC7-LCT)	[22]	Tray lock solenoid (SL1-LCT)
[11]	Shift motor pulse sensor (PC8-LCT)	[23]	Cassette open sensor (PC6-LCT)
[12]	Shift tray motor (M4-LCT)	[24]	Take-up motor (M1-LCT)

19.6 FS-514 (option)

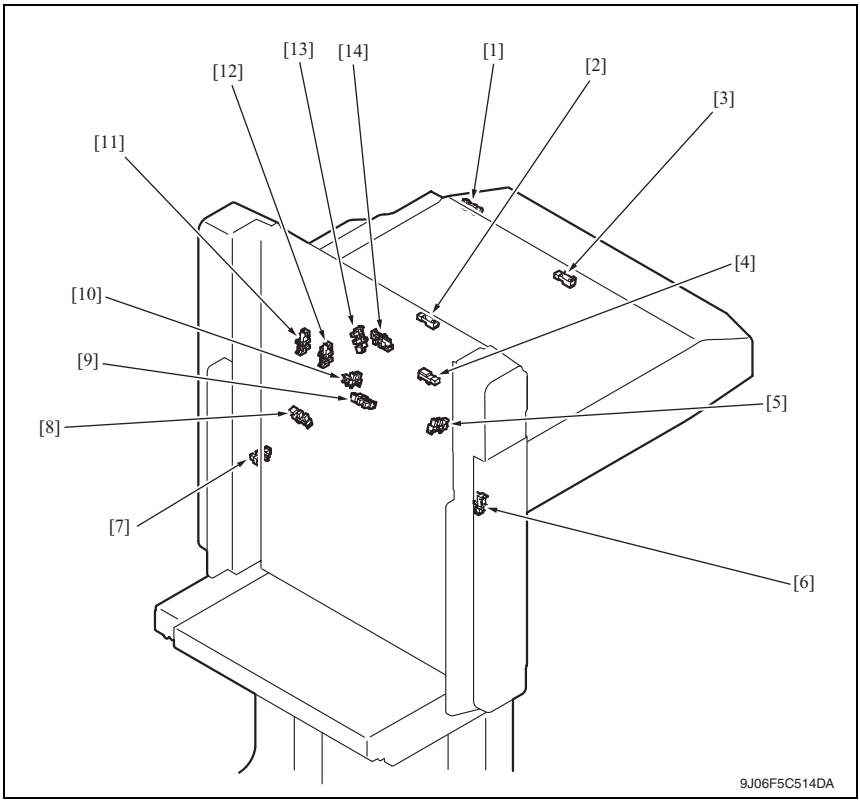

[1]	Entrance switch back sensor (PC4)	[8]	Elevator top face detection sensor (PC12)
[2]	Transport sensor (PC2)	[9]	Exit paddle home position sensor (PC6)
[3]	Entrance sensor (PC1)	[10]	Alignment home position sensor /1 (PC7)
[4]	Storage tray detect sensor (PC3)	[11]	Stapler save position sensor (PC10)
[5]	Alignment home position sensor /2 (PC8)	[12]	Staple home position sensor (PC9)
[6]	Elevator tray home position sensor (PC11)	[13]	Shutter home position sensor (PC14)
[7]	Elevator tray lower limit sensor (PC13)	[14]	Exit roller home position sensor (PC5)

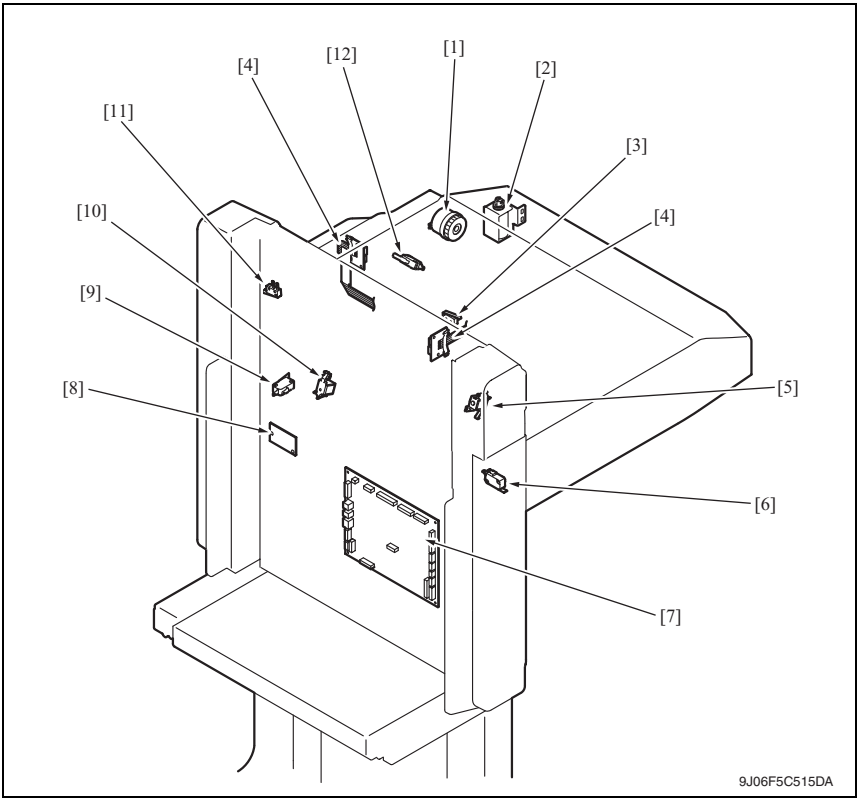

[1]	Skew registration clutch (CL1)	[7]	FS control board (FSCB)
[2]	Duplex guide solenoid (SL3)	[8]	Relay board/1 (REYB/1)
[3]	Shutter detect switch (S2)	[9]	Slide switch (S4)
[4]	Relay board/2 (REYB/2)	[10]	Exit paddle solenoid (SL2)
[5]	Storage paddle solenoid (SL1)	[11]	Elevator tray switch (S3)
[6]	Front door switch (S1)	[12]	Middle guide switch (S5)

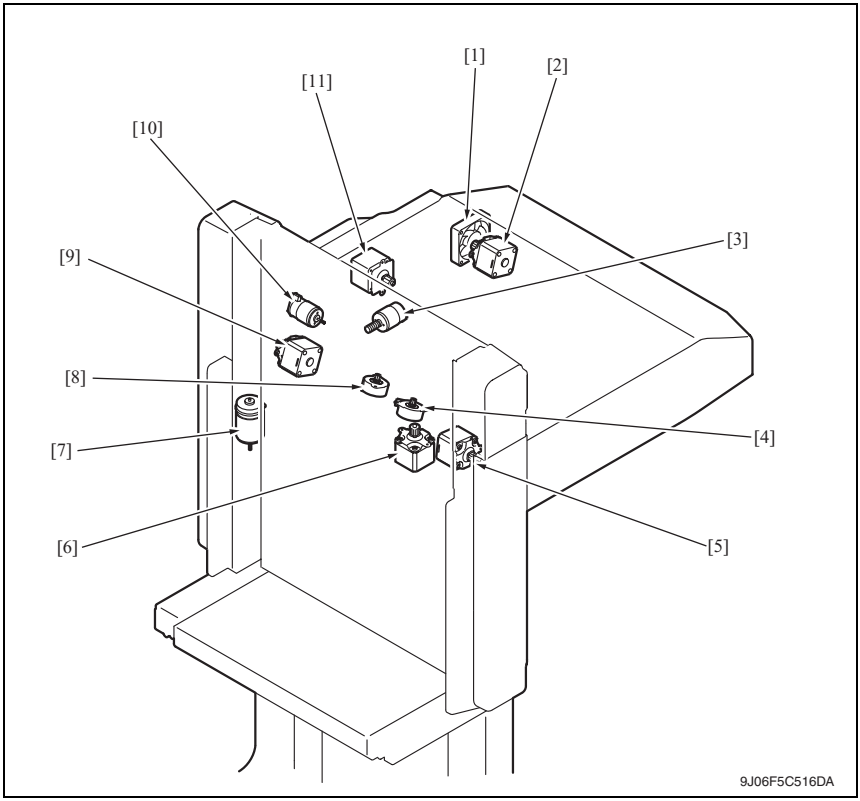

[1] Cooling fan motor (M9)
[2] Entrance motor (M1)
[3] Exit roller motor (M10)
[4] Align motor/2 (M6)
[5] Exit motor (M4)
[6] Stapling unit moving motor (M7)
[7] Elevator motor (M11)
[8] Align motor/1 (M5)
[9] Transport motor/2 (M3)
[10] Shutter motor (M8)
[11] Transport motor/1 (M2)

19.7 PK-510 (option)

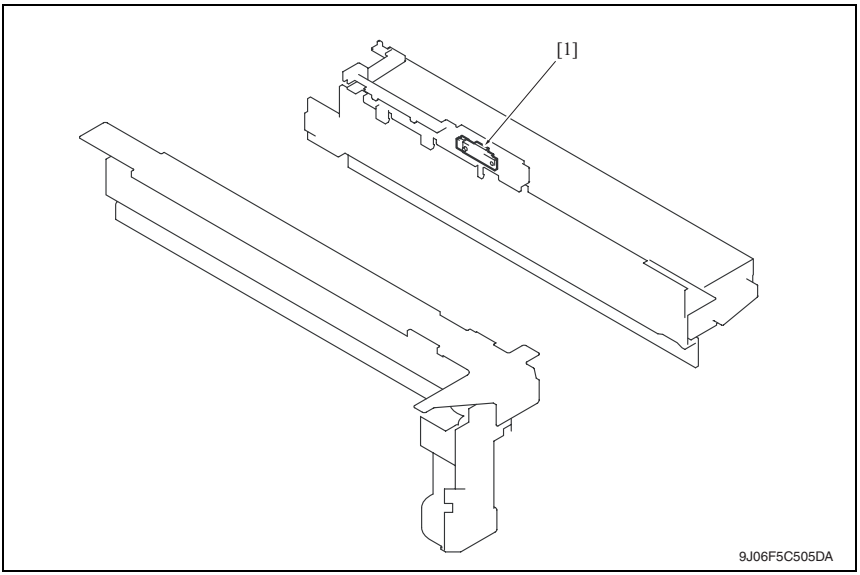

[1] Punch Trash full sensor (PC30)

19.8 MT-501 (option)

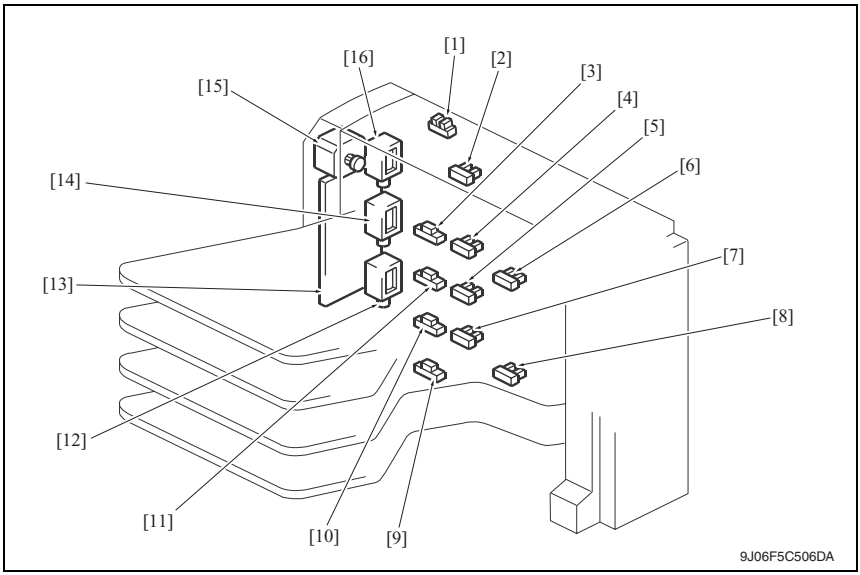

[1]	Cover open/close sensor (PC11-MK)	[9]	Paper detection sensor 1 (PC1-MK)
[2]	Paper full detection sensor 4 (PC8-MK)	[10]	Paper detection sensor 2 (PC2-MK)
[3]	Paper detection sensor 4 (PC4-MK)	[11]	Paper detection sensor 3 (PC3-MK)
[4]	Paper full detection sensor 3 (PC7-MK)	[12]	Bin entrance switching solenoid 1 (SL1-MK)
[5]	Paper full detection sensor 2 (PC6-MK)	[13]	Main control board (PWB-A MK)
[6]	Upper transport sensor (PC9-MK)	[14]	Bin entrance switching solenoid 2 (SL2-MK)
[7]	Paper full detection sensor 1 (PC5-MK)	[15]	Transport motor (M1-MK)
[8]	Lower transport sensor (PC10-MK)	[16]	Bin entrance switching solenoid 3 (SL3-MK)

19.9 SD-503 (option)

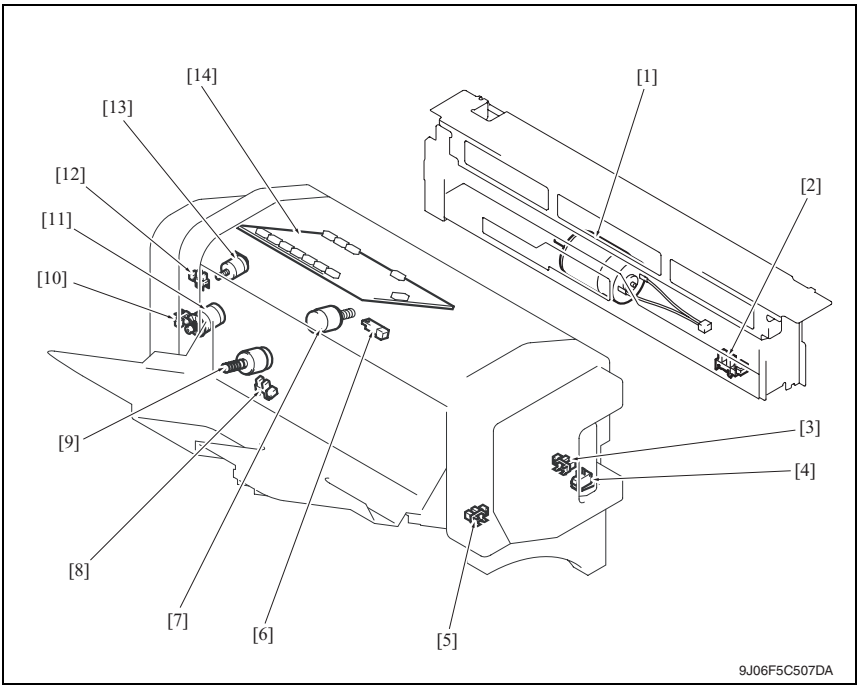

[1]	Crease motor (M10-SK)	[8]	Saddle tray empty sensor (PC21-SK)
[2]	Crease roller home position sensor (P22-SK)	[9]	In & out guide motor (M13-SK)
[3]	Layable guide home sensor (PC24-SK)	[10]	Transport pulse sensor (PC25-SK)
[4]	Saddle interlock switch (S4-SK)	[11]	Saddle exit motor (M8-SK)
[5]	In &out guide home sensor (PC23-SK)	[12]	Saddle exit roller home position sensor (PC18-SK)
[6]	Saddle exit sensor (PC20-SK)	[13]	Saddle exit open/close motor (M9-SK)
[7]	Layable guide motor (M14-SK)	[14]	Main control board (PWB-C SK)

20. Connector layout drawing

Description

Number of pin → ① Possible to confirm by removing external cover.

→ 1 Not possible to confirm by removing external cover.

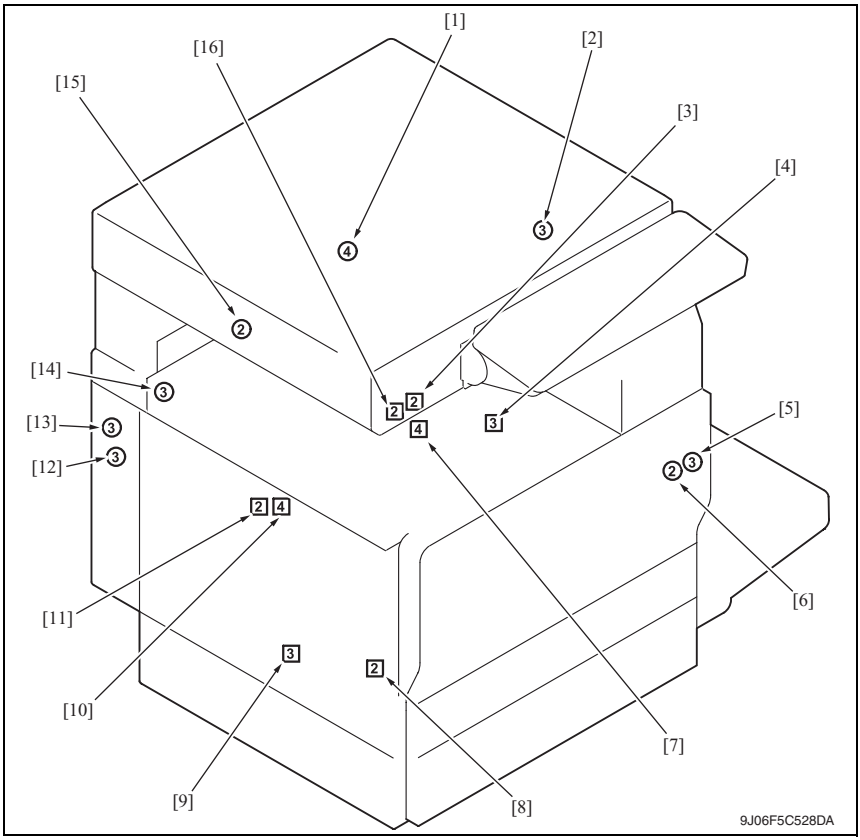

No.	CN No.	Location	No.	CN No.	Location
[1]	CN57	U-14	[9]	CN7	E-25
[2]	CN35	U-11	[10]	CN101	N-24
[3]	CN43	E-10	[11]	CN84	Q-23
[4]	CN14	K to L-2	[12]	CN5	D-7
[5]	CN30	S-6	[13]	CN4	E-7
[6]	CN31	S-6 to 7	[14]	CN23	E-9
[7]	CN21	E-7	[15]	CN54	U-13
[8]	CN1	T-2	[16]	CN38	E-11

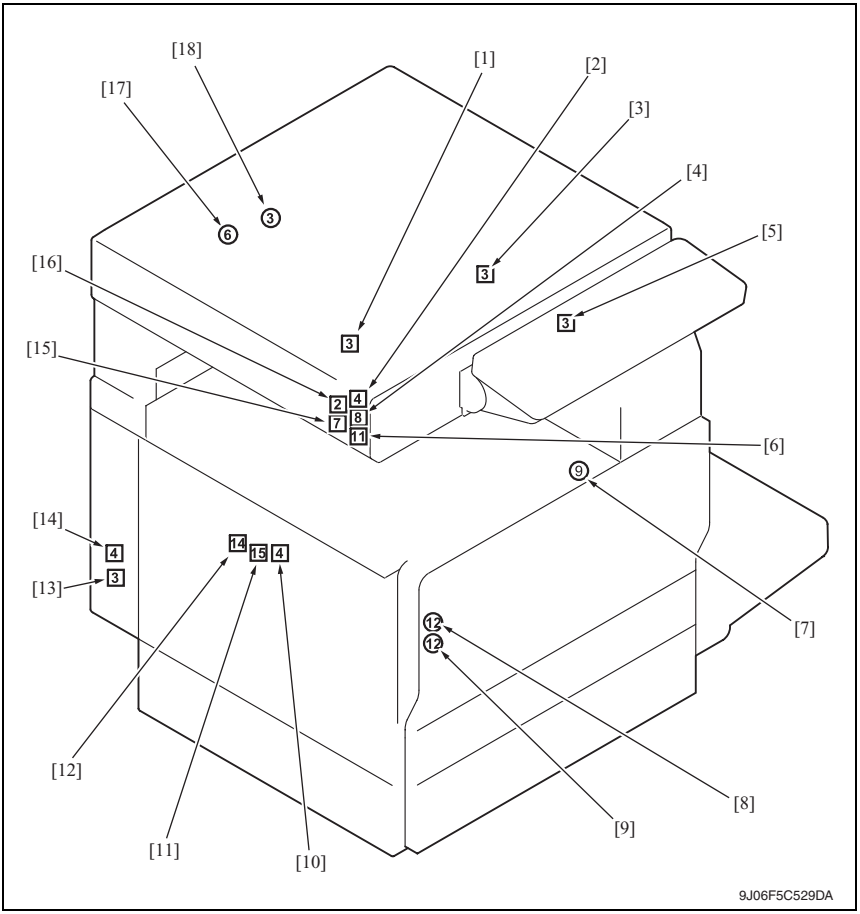

No.	CN No.	Location	No.	CN No.	Location
[1]	CN93	K-2	[10]	CN102	N-25
[2]	CN45	K-2	[11]	CN107	Q to R-24 to 25
[3]	CN96	K-3	[12]	CN44	K-23 to 24
[4]	CN3	E-19	[13]	CN40	E-10
[5]	CN98	K to L-2	[14]	CN18	E-11
[6]	CN13	K-21 to 22	[15]	CN19	K-22
[7]	CN37	J-9 to 10	[16]	CN59	K-2
[8]	CN56	E-16	[17]	CN10	Y-8
[9]	CN55	E-14	[18]	CN11	U-10 to 11

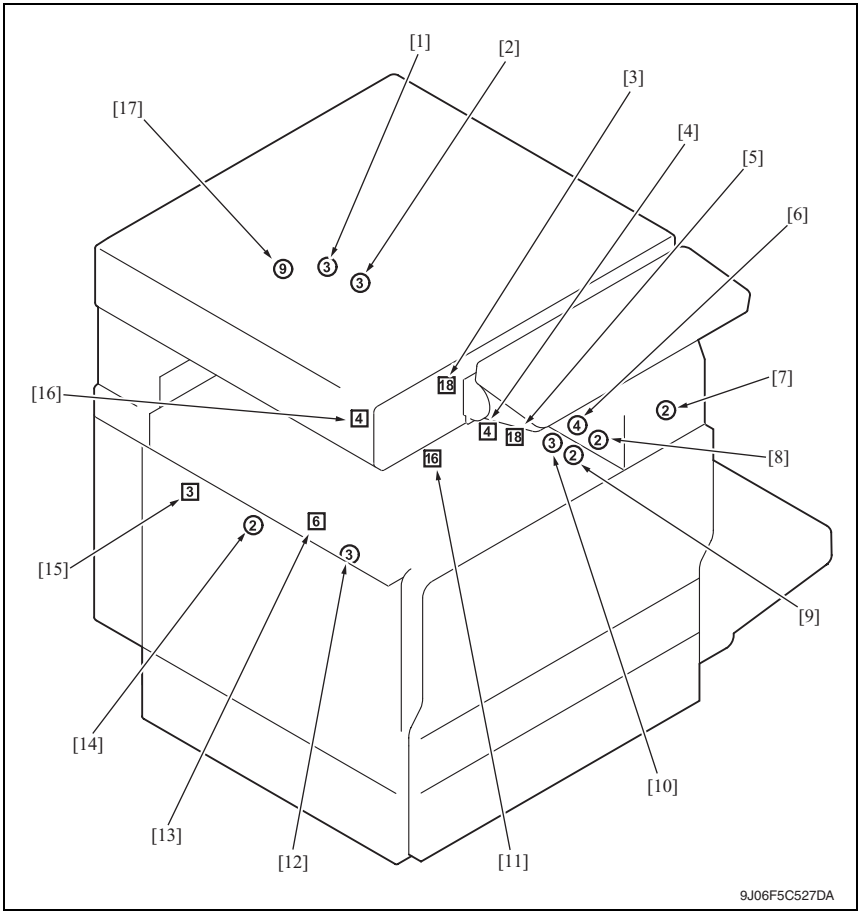

No.	CN No.	Location	No.	CN No.	Location
[1]	CN39	K-3	[10]	CN29	E-9
[2]	CN81	J-8	[11]	CN32	E-12
[3]	CN20	E-3 to 4	[12]	CN94	K to L-3
[4]	CN8	D-7	[13]	CN9	E-2
[5]	CN6	E-3 to 4	[14]	CN26	U-14
[6]	CN22	E-8	[15]	CN95	K-3
[7]	CN58	U-15	[16]	CN36	J-9
[8]	CN28	E-8	[17]	CN25	U-14
[9]	CN27	E-8			

21. Timing chart

21.1 Main unit

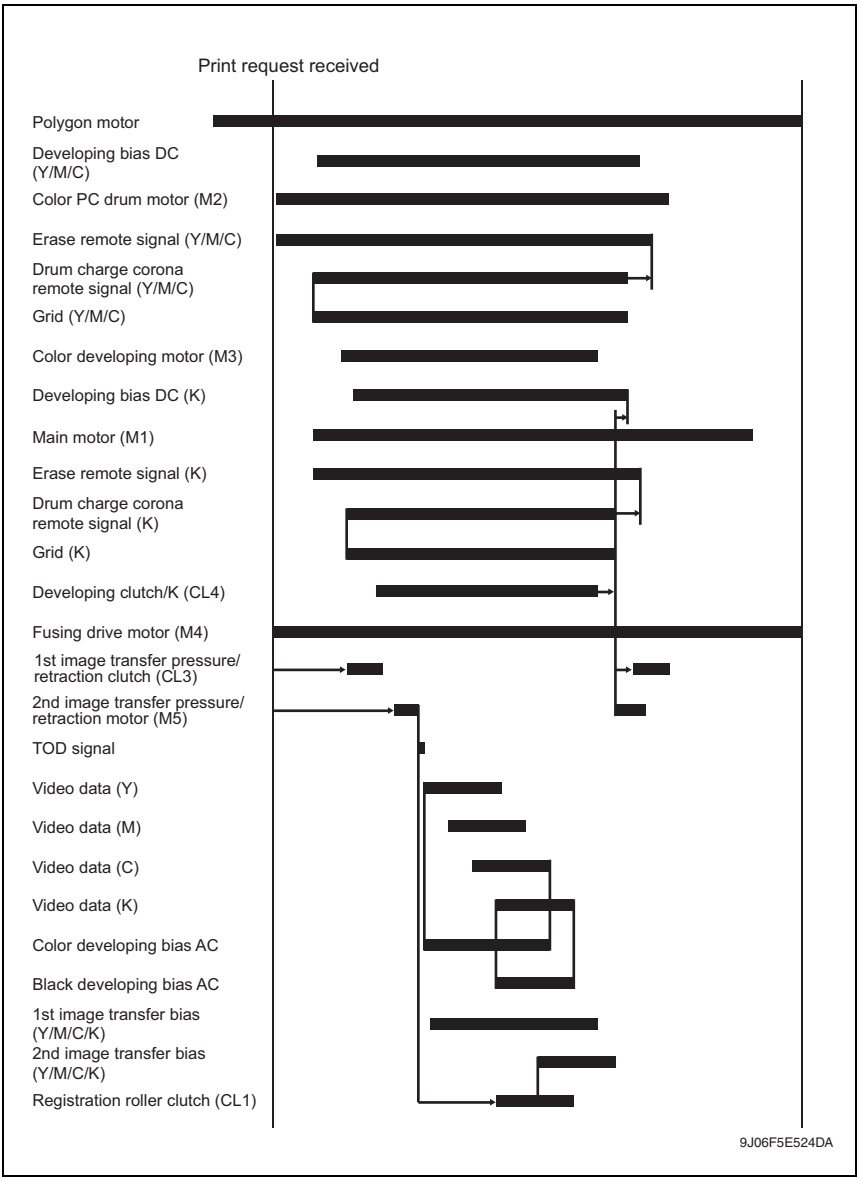

21.2 Automatic document feeder

21.2.1 1-sided mode

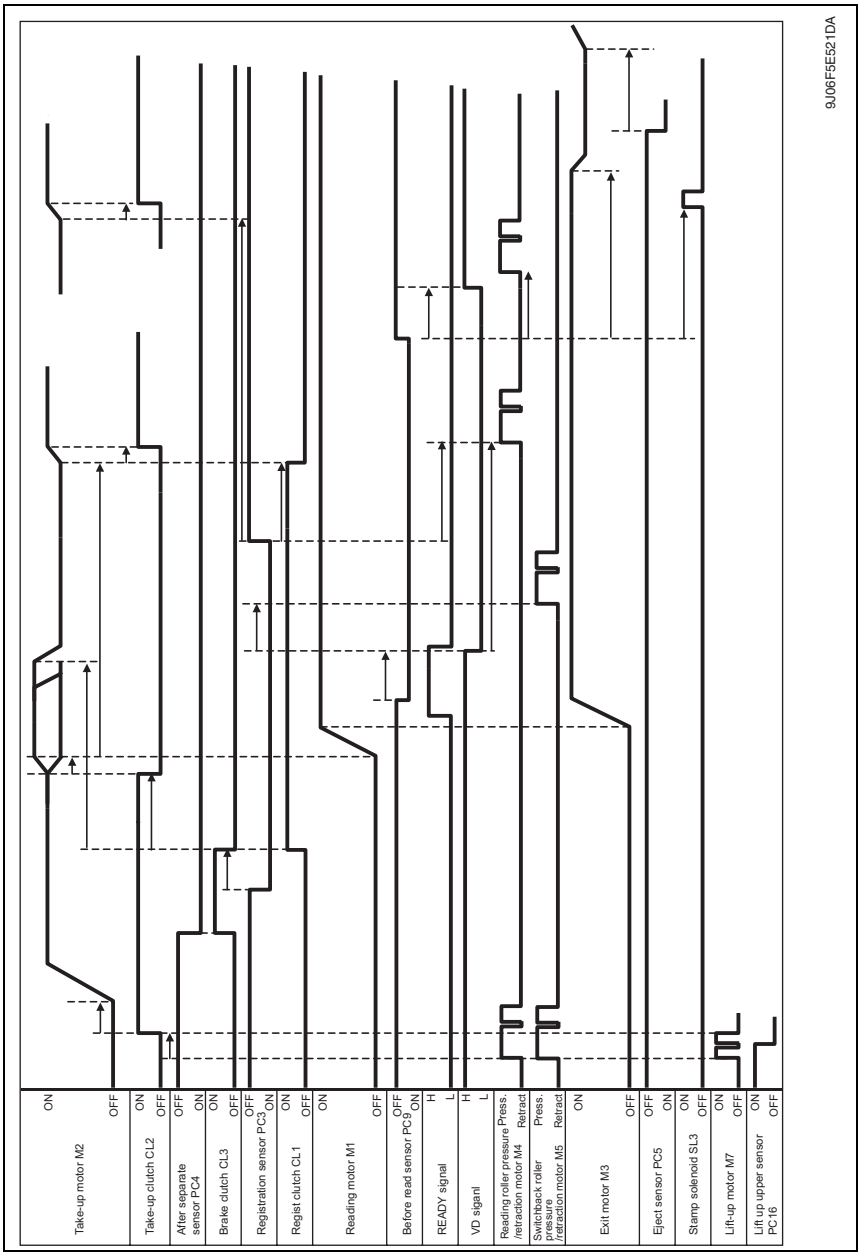

21.2.2 2-sided mode

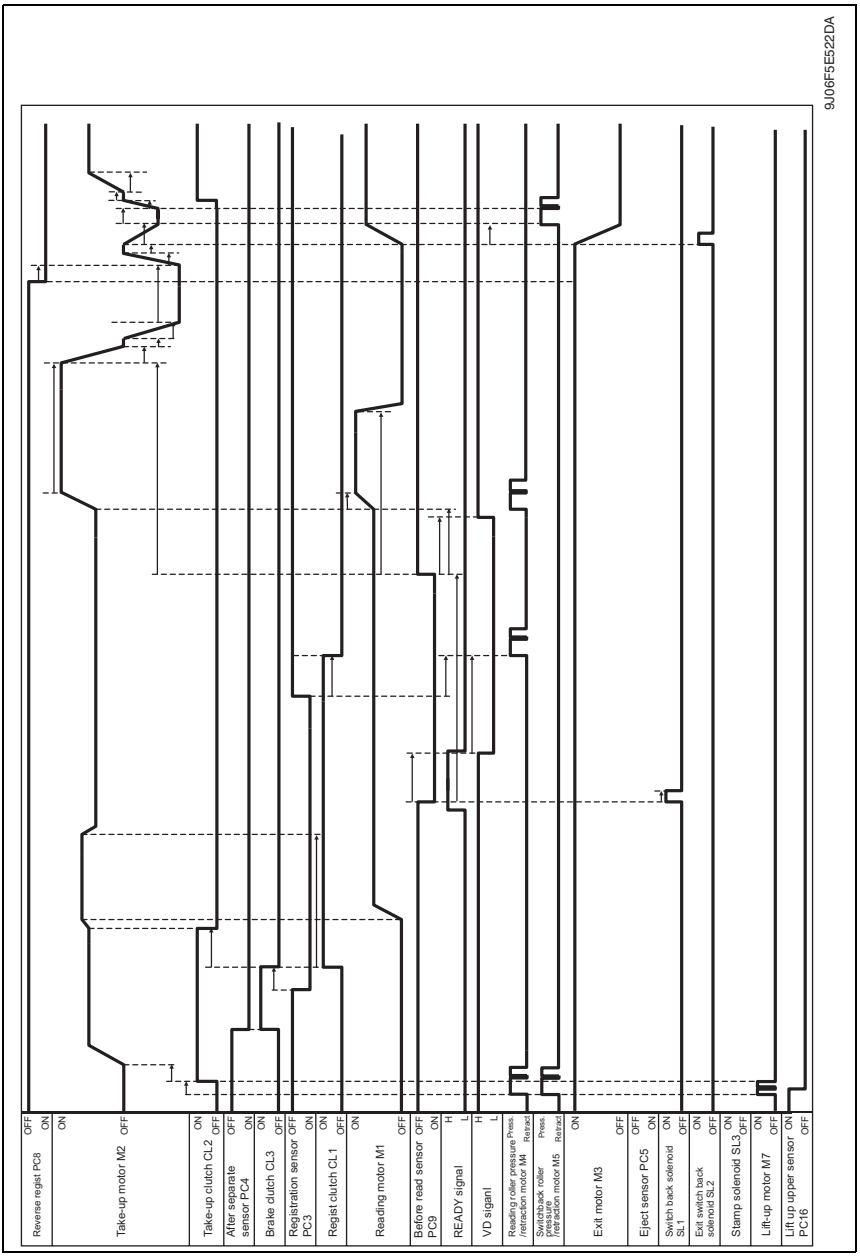

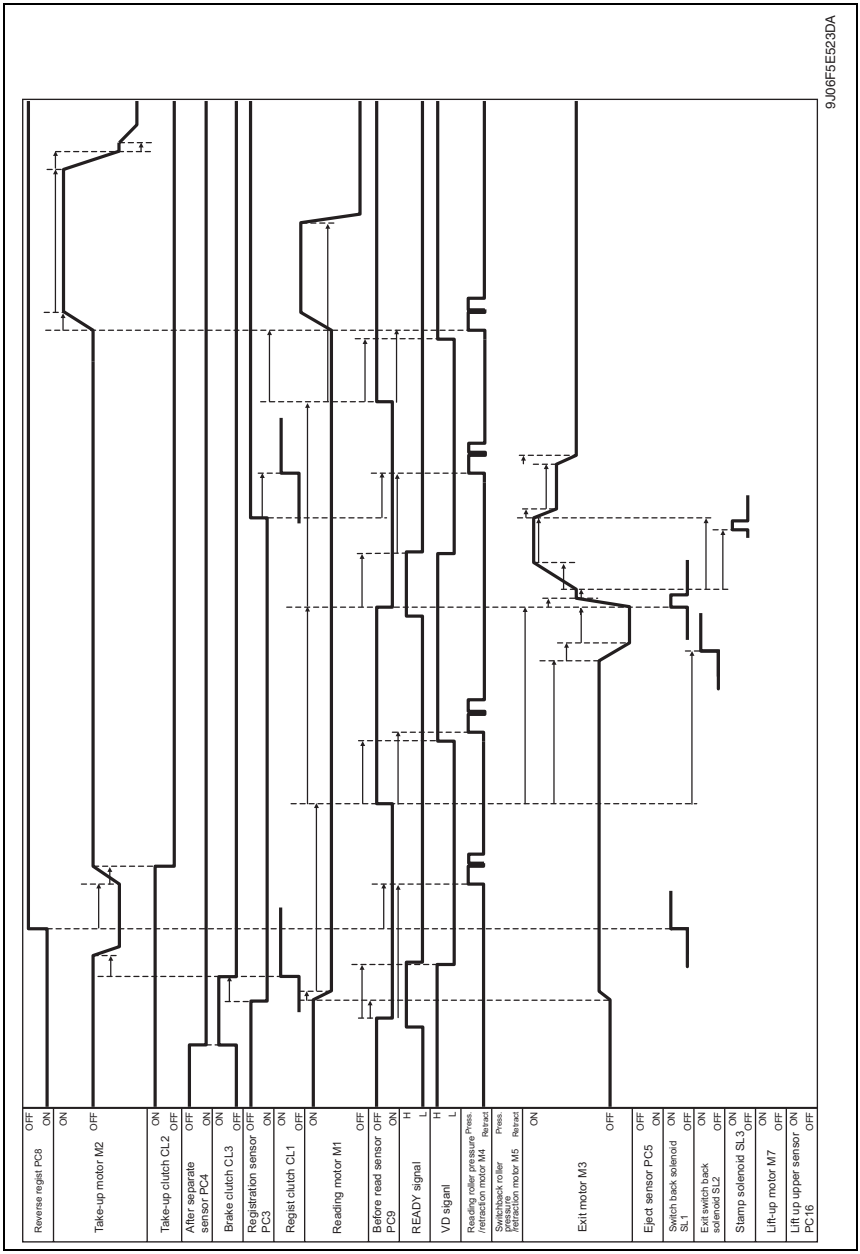
Reverse regist PC8
OFF
ON
Take-up motor M2
ON
OFF
Take-up clutch CL2
ON
OFF
After separate sensor PC4
OFF
ON
Brake clutch CL3
ON
OFF
Registration sensor PC3
OFF
ON
Regist clutch CL1
ON
OFF
Reading motor M1
ON
OFF
Before read sensor PC9
OFF
ON
READY signal
H
L
VD siganl
H
L
Reading roller pressure /retraction motor M4
Press.
Retract.
Switchback roller /retraction motor M5
Press.
Retract.
Exit motor M3
ON
OFF
Eject sensor PC5
OFF
ON
Switch back solenoid SL1
ON
OFF
Exit switch back solenoid SL2
ON
OFF
Stamp solenoid SL3
ON
OFF
Lift-up motor M7
ON
OFF
Lift up upper sensor PC16
ON
OFF
9J06F5E523DA

Blank Page

KONICA MINOLTA

SERVICE MANUAL

FIELD SERVICE

bizhub

C300/C352
Standard Controller

2006.08

KONICA MINOLTA BUSINESS TECHNOLOGIES, INC. Ver. 2.0

Revision history

After publication of this service manual, the parts and mechanism may be subject to change for improvement of their performance.
Therefore, the descriptions given in this service manual may not coincide with the actual machine.

When any change has been made to the descriptions in the service manual, a revised version will be issued with a revision mark added as required.

Revision mark:

- To indicate clearly a section revised, show △1 to the left of the revised section.
  A number within △1 represents the number of times the revision has been made.

- To indicate clearly a section revised, show ▲1 in the lower outside section of the corresponding page.
  A number within ▲1 represents the number of times the revision has been made.

NOTE

Revision marks shown in a page are restricted only to the latest ones with the old ones deleted.

- When a page revised in Ver. 2.0 has been changed in Ver. 3.0:
  The revision marks for Ver. 3.0 only are shown with those for Ver. 2.0 deleted.
- When a page revised in Ver. 2.0 has not been changed in Ver. 3.0:
  The revision marks for Ver. 2.0 are left as they are.

Date	Service manual Ver.	Revision mark	Descriptions of revision
2006/08	2.0	△1	Error corrections / Corresponded to a Card Version G4
2006/03	1.0	—	Issue of the first edition

CONTENTS

Standard Controller

General

1. Controller specifications 1
1.1 Type 1
1.2 Supporting client specifications 2

Maintenance

2. Checking the controller firmware version 3
3. Firmware upgrade 3
3.1 Outline 3
3.2 Preparations for firmware rewriting by Cygwin 3
3.2.1 Outline 3
3.2.2 Service environment 3
3.2.3 Installing the Cygwin 3
3.2.4 Settings of the Windows Environmental Variable 6
3.2.5 Writing into the compact flash 7
3.3 Preparations for firmware rewriting by Firmware Imaging Toolkit 2006 10
3.3.1 Correspond model 10
3.3.2 Function outline 10
3.3.3 System environment 10
3.3.4 Installation of software 11
3.3.5 Update of software 13
3.3.6 Screen 14
3.3.7 Details of each function 16
3.3.8 How to write firmware data 18
3.4 Firmware rewriting by compact flash 23
3.4.1 Updating method 23
3.4.2 Action when data transfer fails 26
3.5 Updating the firmware with the Internet ISW 27
3.5.1 Outline 27
3.5.2 Service environment 27
3.5.3 Preparations for firmware rewriting 27
3.5.4 Firmware rewriting 30
3.5.5 Error code list for the Internet ISW 33

Adjustment/Setting

4. Checking the image controller setting 37

Troubleshooting

5. Checking the system configuration 39
6. Status codes 39
7. Troubleshooting procedures 39
7.1 Unable to print over the network. 39
7.2 Unable to transmit data through Scan to FTP. 41
7.3 Unable to transmit data through Scan to E-Mail. 42
7.4 E-mail does not reach the destination when transmission through Scan to E-Mail is completed. 42

General

1. Controller specifications

1.1 Type

Type	Built-in type controller	
Print speed	bizhub C352	35 ppm (Color/B&W, A4 or 8 $^1/_2$ x 11 paper, and simplex) 32 ppm (Color/B&W, A4 or 8 $^1/_2$ x 11 paper, and duplex)
	bizhub C300	30 ppm (Color/B&W, A4 or 8 $^1/_2$ x 11 paper, and simplex) 30 ppm (Color/B&W, A4 or 8 $^1/_2$ x 11 paper, and duplex)
Printer language	PCL5e/c emulation PCL XL Ver. 2.1 emulation PostScript 3 emulation (3011.xx.xx)	
CPU	PPC750 FX 600 MHz	
Program ROM	64 MB	
⚠1 RAM	1 GB	
Hard Disk	40 GB	
Host interface	Standard: Ethernet (10Base-T or 100Base-TX) Optional: USB 1.1, USB 2.0, or IEEE 1284 *1	
Network protocol	IPX/SPX (Auto, Ethernet II, 802.2, 802.3, 802.3 SNAP) NetBEUI, TCP/IP SMTP. POP3, FTP, SNMP, HTTP 1.1 DHCP, ARP/ICMP, BOOTP, SLP Apple Talk, Bonjour	
Network print service	Pserver (NDS) ... NetWare 4.x, 5.x, 6.x Pserver (Bindery) ... NetWare 4.x NDPS ... NetWare 5.x, 6.x SMB, RAW port printing IPP 1.1, LPD	
Network scan functions	Scan to FTP with URL notification Scan to PC with URL notification Scan to e-mail Scan to HDD with URL notification, TWAIN	
Driver	PCL6 printer driver (Windows98/98SE/Me, NT4.0, 2000, XP, Server2003) PS3 printer driver (Windows 98SE/Me, NT4.0, 2000, XP, Server2003, MacOS 9.2, MacOS X 10.2/10.3/10.4) TWAIN driver	
Utility	PageScope Web Connection	
Compatible paper size	Max. standard paper size A3 Wide	
Resolution	Equivalent to 1800 dpi in main scanning direction × 600 dpi in sub scanning direction	
Power requirements	Shared with Main unit	
Operating environmental requirements	10 to 30 °C (50 to 86 °F) 15 to 85 %	
Fonts	PCL	Latin 80 fonts
	PS	Latin 136 fonts
Options	Not available	

*1: The optional local interface kit (EK-702) is required.

1.2 Supporting client specifications

PC	IBM PC and its compatible, Macintosh		
RAM	64 MB or more (128MB or more for XP)		
OS	Windows 98/98SE, Windows Me, Windows 2000, Windows XP, Windows NT 4.0, Windows Server 2003 Mac OS 9.2, OS X Ver.10.2 or later, UNIX, LINUX		
Interface	With a network connection	Connection method	Ethernet 10Base-T/100Base-TX
		Protocols	TCP/IP, NetBEUI, IPX/SPX (NetWare 4.x, 5.x, 6.x)
	With a local connection	USB 1.1/2.0 IEEE1284 (Compatible/Nibble/ECP)*1	
Browser	Microsoft Internet Explorer 6 or later recommended (Java-Script enabled, cookies enabled) Microsoft XML Parser MSXML3.X must be installed when using Internet Explorer 5.X. Netscape Navigator 7.02 or later (JavaScript enabled, cookies enabled) Macromedia® Flash® (version 7.0 or later plugin) required		

*1:The optional local interface kit (EK-702) is required.

NOTE

- **These specifications are subject to change without notice.**

Maintenance

2. Checking the controller firmware version

- The version of the controller firmware can be checked on the Control panel of the machine.

1. Call the Service Mode to the screen.
2. Touch [Firmware Version].
3. Check the firmware versions.

3. Firmware upgrade

3.1 Outline

- There are two ways to update the firmware: One is by directly connecting with the main unit using the compact flash, and the other is by downloading over a network using the Internet ISW.

⚠1 3.2 Preparations for firmware rewriting by Cygwin

3.2.1 Outline

- Write the firmware into the compact flash using Cygwin.
- Cygwin consists of two types: Full install version and light version that is comprised only of necessary files.

3.2.2 Service environment

- OS: Windows 2000/XP
- Drive which enables writing/reading of compact flash
- Compact flash (Service tool: 4038 R717 ##)

3.2.3 Installing the Cygwin

A. For the full installation version

1. Double click the [setup.exe] on CD-ROM in which Cygwin is stored.

4037F2C501DA

2. Click [Next (N)].

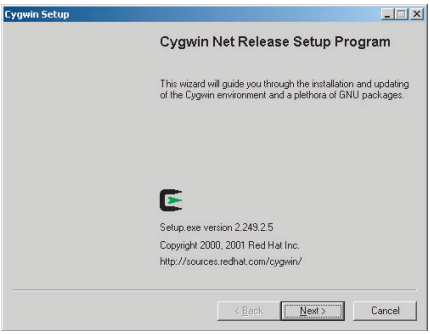

4037F2E545DA

3. Select “Install from Local Directory”, and click [Next (N)].

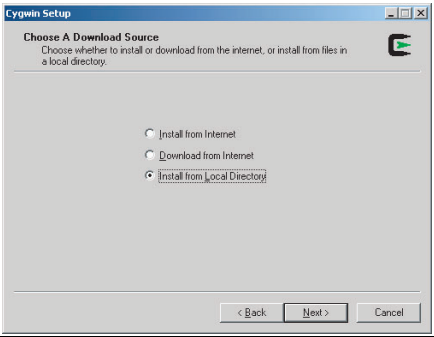

4037F2E546DA

4. Specify the folder for installation.
Check to make sure that “Root Directory” is in default setting, [C:\cygwin].

NOTE

- **Make sure to check that “Root Directory” is in default setting, [C:\cygwin].**
- **Do not change the setting value except “Root Directory.”**

5. Click [Next (N)].

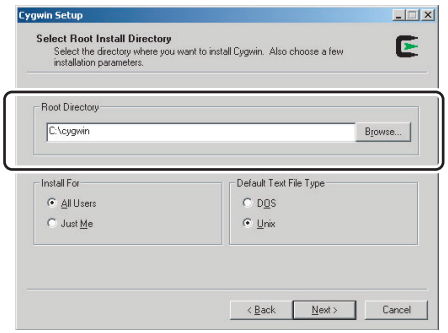

4037F2E547DA

6. Specify the place of the data to be installed.
   For installing from CD-ROM, select the [cygwin] folder in CD-ROM drive.
   (Described below is the sample procedure when CD-ROM drive is E-drive.)
7. Click [Next (N)].

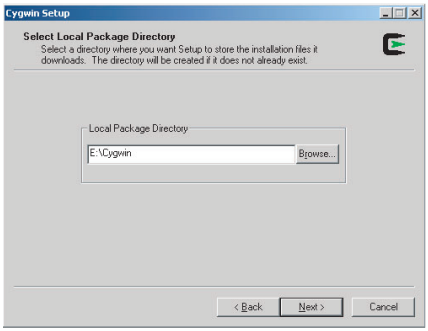

4037F2E548DA

8. Click [Next (N)].

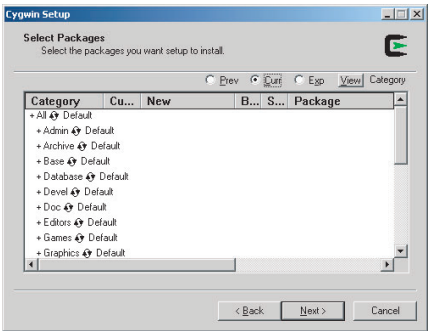

4037F2E549DA

9. Click [Complete] to start installing.

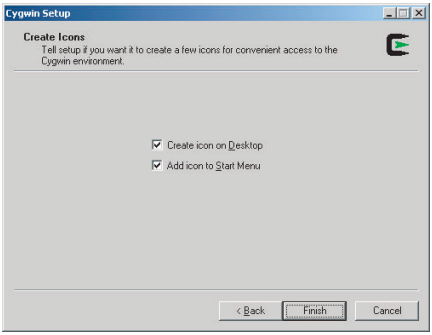

4037F2E550DA

B. For the light version

1. Decompress the downloaded compressed file “cygwin_rhein_phase2.zip” directly to the C drive (Windows system drive).
2. Confirm that the “Cygwin” folder is created directly in the C drive (Windows system drive).

3.2.4 Settings of the Windows Environmental Variable

1. After installing, open the property of “My Computer”, and click the “Environmental Variable” of “Advanced” tab.
2. Click the “New” in System Variable Setting.

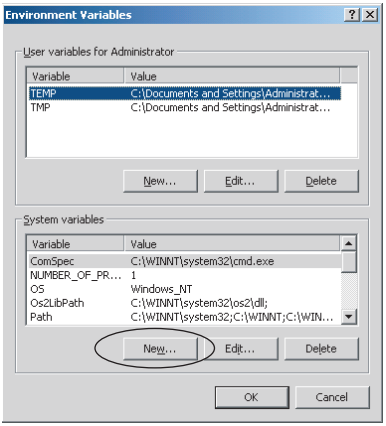

4036fs2620e0

3. Set the following two values as the Windows environmental variable.

Variable name	Variable value
CYGWIN	ntsec
HOME	/home/username

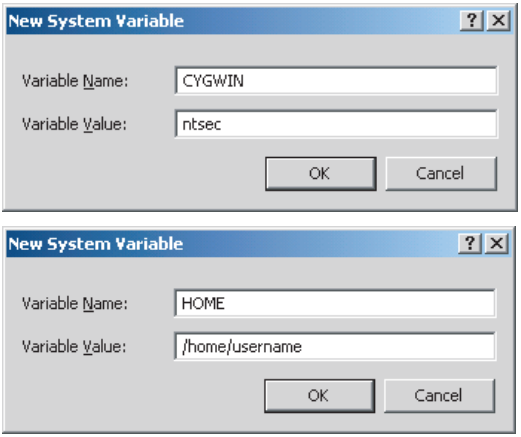

4036fs2621e0

3.2.5 Writing into the compact flash

1. Put the data of firmware in the optional directory. (C:\bizhub in the below figure)

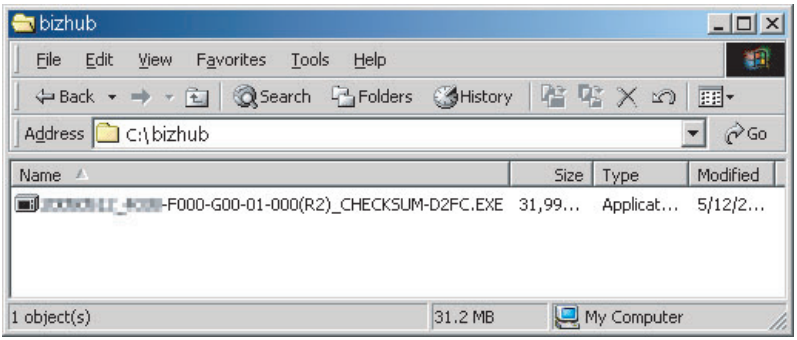

4038F2E562DB

NOTE

- **The file name of firmware data consists of the "Release Date_Version_CHECKSUM-****.exe."**

2. Double-click the firmware data, and specify the directory to be uncompressed, and then uncompress it.

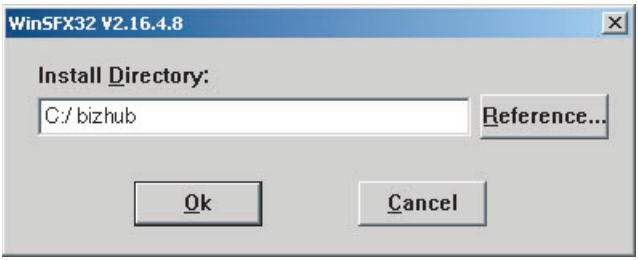

4038F2E563DB

NOTE

- **When old firmware is still left in the specified directory to be uncompressed, delete it before uncompressing.**
- **When the firmware data is decompressed, "card_work" folder is created in the selected directory and the data is decompressed in this folder.**

3. Mount the compact flash on the PC, and check the drive name, which was recognized in the Windows. (F-drive in the following figure)

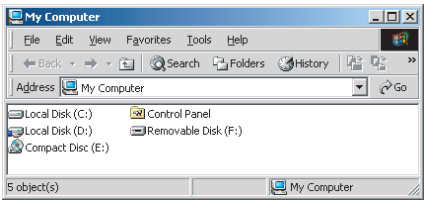

4036fs2623e0

4. Click [Start] → [Program] → [Accessories] → [Command Prompt] to open the command prompt.

5. Use the command prompt to move into the uncompressed directory.

6. Specify the drive of compact flash, which was recognized through the procedure 3, and execute the “mksf.bat.” (Input the C: \bizhub\card_work>mkcf f (drive number): in the below figure, and push the “Enter”.)

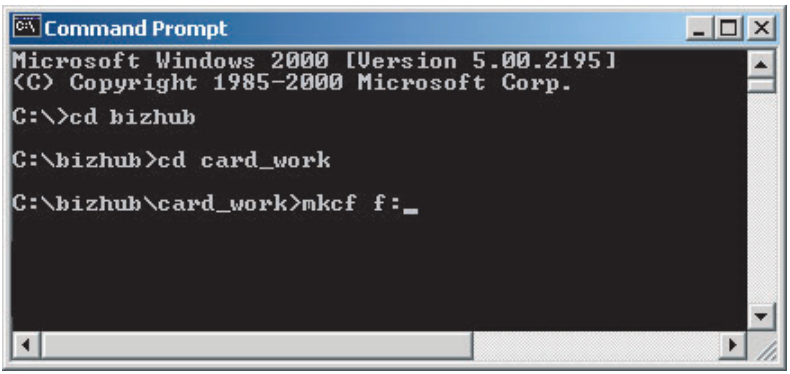

4038F2E564DB

7. Once the “mkcf.bat” is executed, data writing into the compact flash is started.
8. Upon completion of writing, CHECKSUM is executed. If CHECKSUM value is precisely matched, “VERIFY OK” appears.

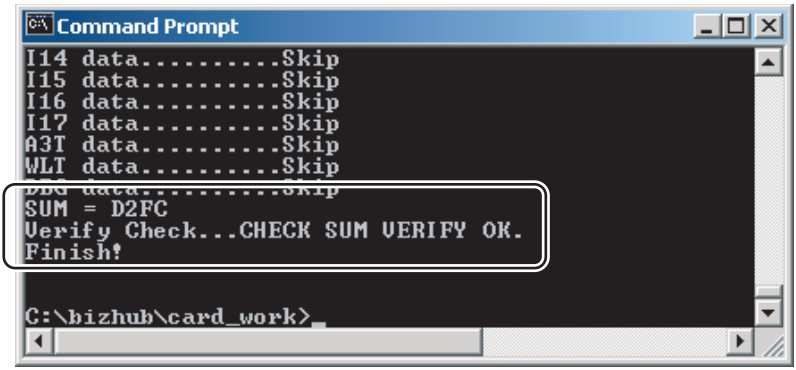

4038F2E565DB

9. Remove the compact flash from PC.

NOTE

- **When removing the compact flash, be sure to check if data is written as normal and then remove it according to the precise removing method.**

3.3 Preparations for firmware rewriting by Firmware Imaging Toolkit 2006

- This software is designed as the tool to write firmware data of MFP/printer released by KMBT into the compact flash card.

3.3.1 Correspond model

- Correspond models of the software is as follows.

Color machine	• bizhub C250/C300/C350/C351/C352/C450 • bizhub C250P/C352P/C450P
B/W machine	• bizhub 200/250/350 • Di2510/3010/3510/2510f/3010f/3510f

3.3.2 Function outline

- The following functions are available with this software.

Function type	Function name	Description
Basic functions	Write Firmware to a card	• Write firmware data into the compact flash card. See P.16
	Compare Firmware with a card	• Compare the firmware data written into the compact flash card with the one saved in PC. See P.16
Advanced functions	Create a Firmware Image from a card	• Create the firmware image form using the firmware data written into the compact flash card. See P.17
	Format a card	• Format the compact flash card by the FAT or vxWorks form. **NOTE** • **vxWorks form is not applicable** See P.17
	Display information about a card	• Acquisition the information of firmware data written into the compact flash card. See P.17

3.3.3 System environment

- The following system environments are required or recommended to use the software.

Computer	• IBM PC/AT compatible machine
CPU	• Pentium III / 500 MHz or higher is recommended.
Correspond OS	• Windows 2000, Windows XP or Windows Server 2003
Required memory	• More than 128 MB (Windows 2000), 256MB (Windows XP/2003) is recommended.
Others	• Drive that is able to Read/Write compact flash

3.3.4 Installation of software

- Follow the procedures shown below to install the software.

NOTE

- **Install the software to the PC with the administration authentication.**
- **When any anti-virus program is activated, quite the program before the installation.**

1. Double click [setup.exe] to start the installation of the software.

9J06F2C673DA

2. Click [Next >].

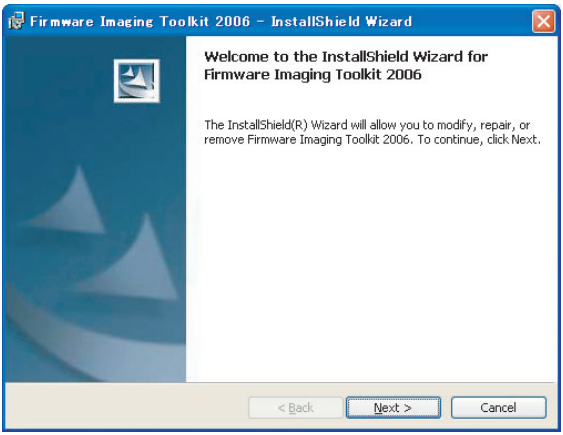

9J06F2E700DA

3. After checking the contents of license agreement, select [I accept the terms in the license agreement] and click [Next >].

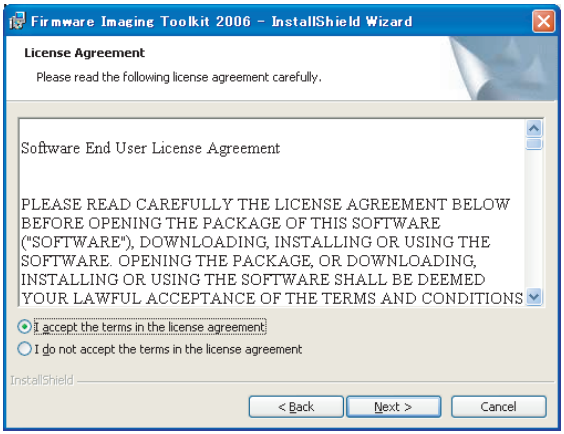

9J06F2E701DA

4. Select the installed destination folder of Firmware Imaging Toolkit 2006, and click [Next>].

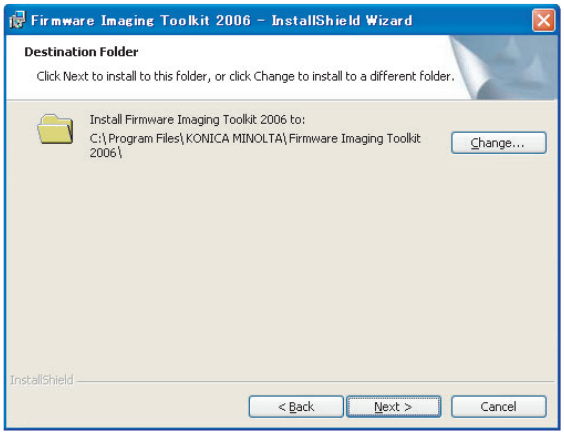

9J06F2E702DA

5. Click [Install] to start installation.
6. Click [Finish] to complete the installation.

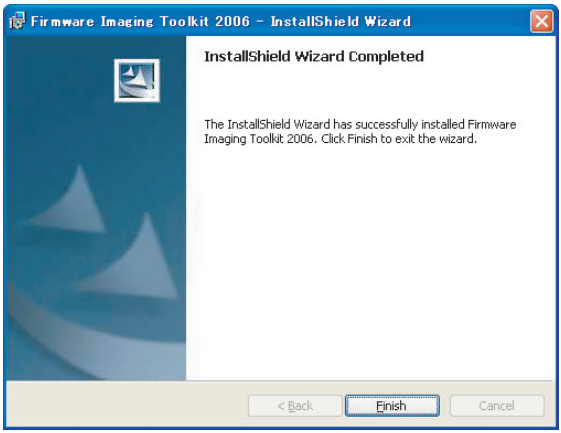

9J06F2E703DA

7. Shortcut file will be created inside Windows Start menu ([Program] → [KONICA MINOLTA] → [Firmware Imaging Toolkit 2006]).

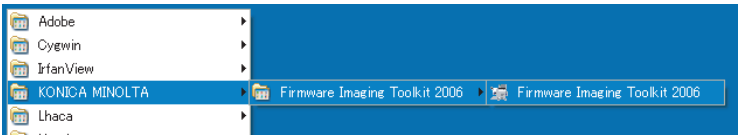

9J06F2E708DA

3.3.5 Update of software

- To update the software version, delete (uninstall) the currently installed program and install the new version.
- Follow the procedures shown below to delete (uninstall) the program.

1. Quite the program if the software is activated.
2. Select [Firmware Imaging Toolkit 2006] of [Add/Remove Programs] in Windows Control Panel menu to delete the program.

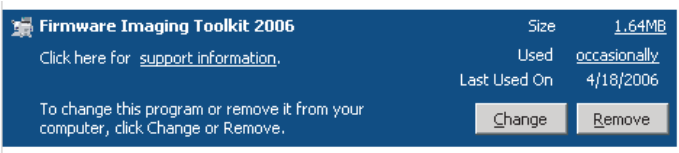

9J06F2E709DA

3.3.6 Screen

A. Main window

- The main window will be displayed after activating the software.
- Main window consists of 2 patterns: Basic mode, Advanced mode

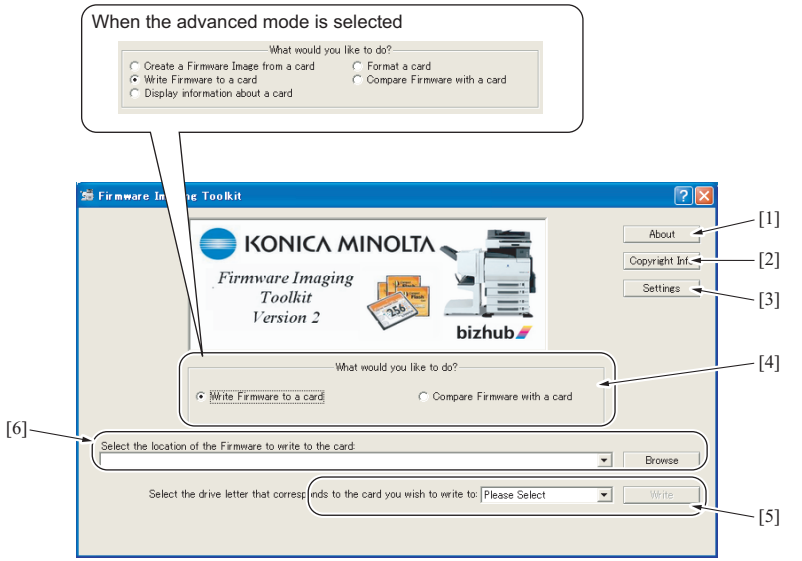

9J06F2E704DA

[1]	About	• To display the outline of the tool.
[2]	Copyright Info	• To display the license agreement and version information of the tool.
[3]	Settings	• To display the dialog to enable the advanced functions. • Select the check box of [Enabled Advanced Features] to enable advanced functions at main window. See P.15
[4]	What would you like to do?	• To select the function to be used. • Displayed screen is different between Basic mode and Advanced mode. See P.16
[5]	Select the location of the Firmware to write to the card:	• To select the compact flash drive to which the data to write.
[6]	Select the drive letter that corresponds to the card you wish to write to:	• To select the location where the firmware is stored in PC.

B. Settings dialog

- It will be displayed by clicking [Settings] at main window.
- Other settings will be enabled by selecting the check box of [Enabled Advanced Features].

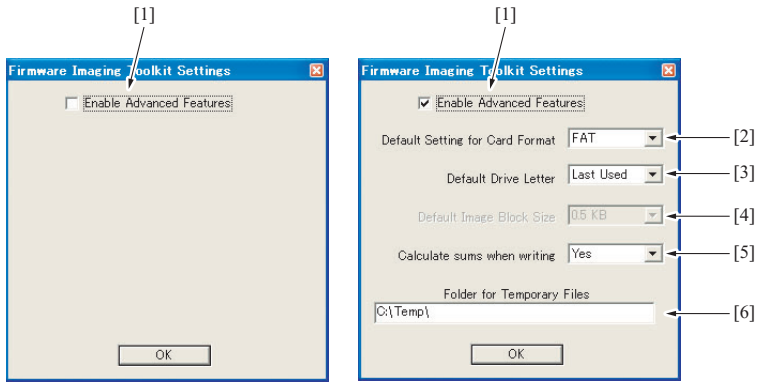

9J06F2E705DA

[1]	Enable Advanced Features	• Enable the setting of advanced functions at the dialog by selecting the check box. Also advanced functions can be selected at the main window.
[2]	Default Setting for Card Format	• Select the default card format during software starting. FAT : The format to be used by all models that the software supports. vxWorks : Not available yet.
[3]	Default Drive Letter	• Select how to set default of compact flash drive during software starting. LastUsed : The drive used at previous time is selected. None : [Please Select] is displayed on the screen every starting and the drive should be selected every time.
[4]	Default Image Block Size	• Not available yet.
[5]	Calculate sums when writing	• Set whether to calculate check sums during data writing. • If [YES] is selected, data consistency can be ensured by data verification of check sums during data writing. However, it takes more time for data writing compared to the case without sums calculation (Basically this mode shall be selected.) • If [No] is selected, check sums calculation is skipped during data writing. Although it take less time for data writing compared to the case with sums calculation, it fails to ensure the reliability of the written data.
[6]	Folder for Temporary Files	• Set the folder for saving temporary files during the tool is activating. The temporary file is automatically deleted after the operation completes normally.

3.3.7 Details of each function

A. Basic functions

(1) Write Firmware to a card

- To write FW data into the compact flash. The FW data of the models shown below can be written.
- To write FW data into the compact flash. The FW data of the models shown below can be written.

<Corresponding models and firmware file type>

File type / Models	Indexed firmware type	Compressed firmware type	Uncompressed firmware type	Di3510/350/250/200 firmware type
C450/C450P/C351	rhein1_cf.tar.gz	*.img.gz	*.img	—
C352/C352P/C300	rhein2_cf.tar.gz			—
C350	tss2_cf.tar.gz			—
C250/C250P	rhein3_cf.tar.gz			—
Di2510/3010/3510/2510f/3010f/3510f	—	—	—	ma001
200/250/350	—	—	—	ma001a

NOTE

- **The above-mentioned [Indexed firmware type] and [Di3510/350/250/200 firmware type] shall be comprised of multiple files and one of the files shall be named as above.**
- **[Compressed firmware type] means the compressed formed image file that is created using the tool's function of the [Create a Firmware Image from a card].**
- **[Uncompressed firmware type] means the image file that is uncompressed the compressed firmware file.**
- **To write the image file data (*.img.gz or *.img) into the compact flash, use the compact flash with the same capacity as the one used for the original image file. Although the compact flash with larger capacity than the original one can be used, it is not covered under warranty.**
- **C350 firmware requires the compact flash over 64 MB.**
- **Firmware of C450/C450P/C351/C352/C352P/C300/C250/C250P requires the compact flash over 128 MB.**

(2) Compare Firmware with a card

- Compare the firmware data written into the compact flash and the one (file) saved in PC.
- After the comparison, display the check sum information (comparison result dialog) of the firmware data of the compact flush and the file.
- The firmware data (file) format saved in PC shall consistent with the one written into the compact flash.

B. Advanced functions

(1) Create a Firmware Image from a card

- Create the image file from the firmware data written into the compact flash.
  Create the image file by dumping directly the data in the card. This function allows us to save the various type of firmware data in the compact flash as the image file and hold as copy data.
- The created FW image file is automatically compressed and created as the Compressed firmware file (*.img.gz).
  The image file is written into the compact flash in the uncompressed form, however, the uncompressed data would occupy too much capacity, which makes file control difficult. Therefore this tool doesn't create uncompressed firmware file (*.img).

(2) Format a card

- Make format of the compact flash in FAT or vxWork form.
- To write the firmware data into the compact flash, the card should be formatted in FAT form to clear (initialize) the description of the compact flash.

NOTE

- **In current version, only FAT format is available but not vxWork format.**
- **After the firmware data is written into the compact flash, it becomes the own file style that is different from the FAT, and the compact flash that the firmware data is written cannot be browsed on the Windows OS.**

(3) Display information about a card

- Display the information of the firmware data written into the compact flash.
  The information to be displayed is according to the type of written FW data.
- For the series of Di3510/200/250/350 series, MSC version is displayed.
- For the series of C450/C450P/C351/C352/C352P/C300/C250/C250P, check sums of each firmware data is displayed.

3.3.8 How to write firmware data

A. In the case of C450/C450P/C351/C352/C352P/C300/C250/C250P series

1. Put the firmware data in the optional directory. (C:\bizhub in the below figure)

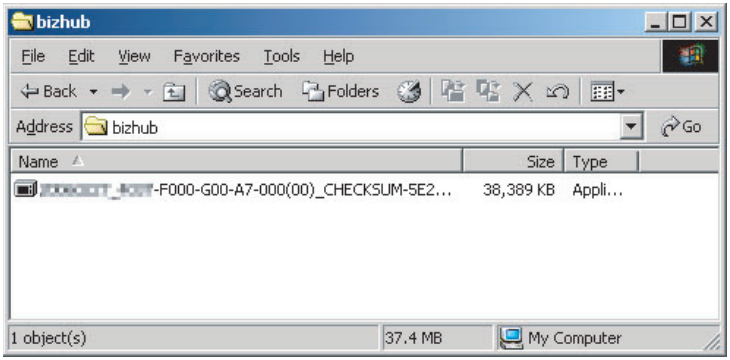

9J06F2E710DA

NOTE

- **The file name of firmware data consists of the "Release Date_Version_CHECKSUM-****.exe."**

2. Double-click the firmware data, and specify the directory to be uncompressed, and then uncompress it.

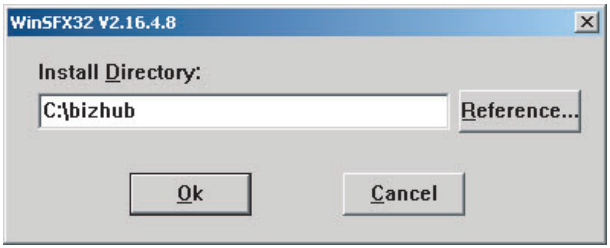

9J06F2E711DA

NOTE

- **When old firmware is still left in the specified directory to be uncompressed, delete it before uncompressing.**

3. Mount the compact flash on the PC, and check the drive name, which was recognized in the Windows. (F-drive in the following figure)

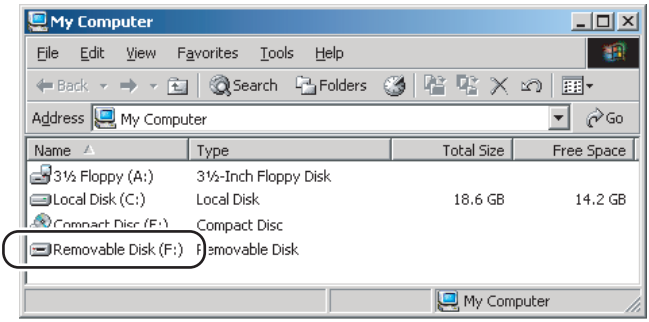

9J06F2E712DA

4. Start Firmware Imaging Toolkit 2006.

NOTE

- **When using the external compact flash drive such as USB be sure to connect them before starting this tool.**

5. Select the check box of [Write Firmware to a card].

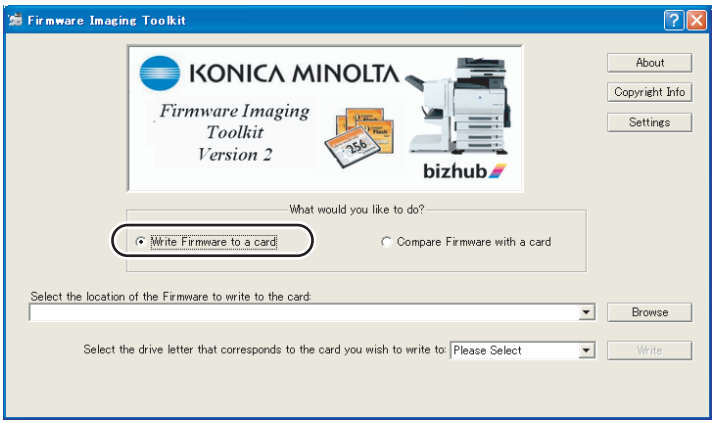

9J06F2E706DA

6. Click [Browse].

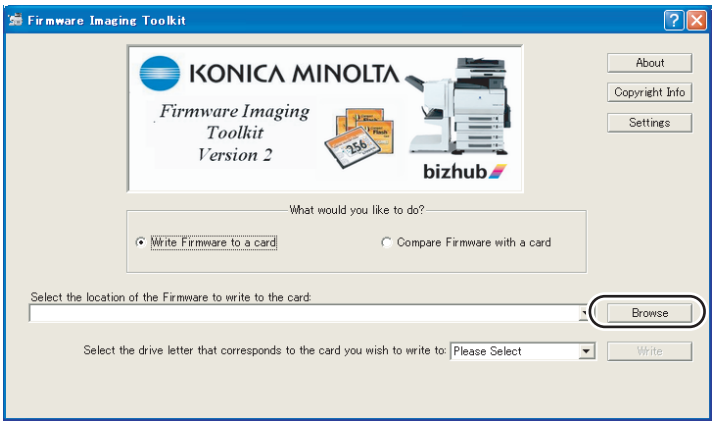

9J06F2E707DA

7. Select the file type [C450/ C351/C352/ C300/C350/C250 Indexed Firmware].

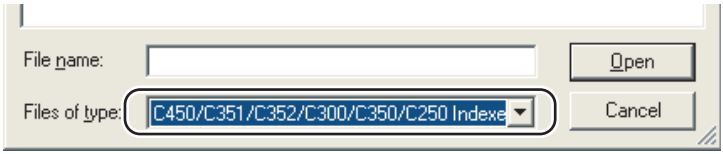

9J06F2E713DA

8. Move to the folder decompressed at step 2, confirm that only "###_cf.tar.gz" (### is for model name) is displayed, and select.

NOTE

- **If the file extension is set to be not displayed in Windows, the file name ".gz" will not be displayed.**

9. Click [Open].

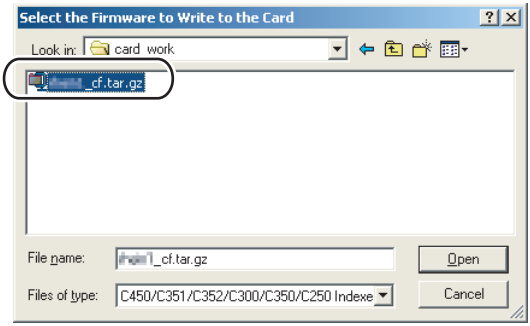

9J06F2E714DA

10. Select the drive that the compact flash is inserted, which is confirmed at step 3.

NOTE

- **The drives other than the compact flash that is recognized as "Removable Disk" can be selected for the writing destination. If these drives are selected mistakenly to make the writing, it may give fatal damage on Windows system or delete the saved data. Therefore pay close attention when selecting the drive.**

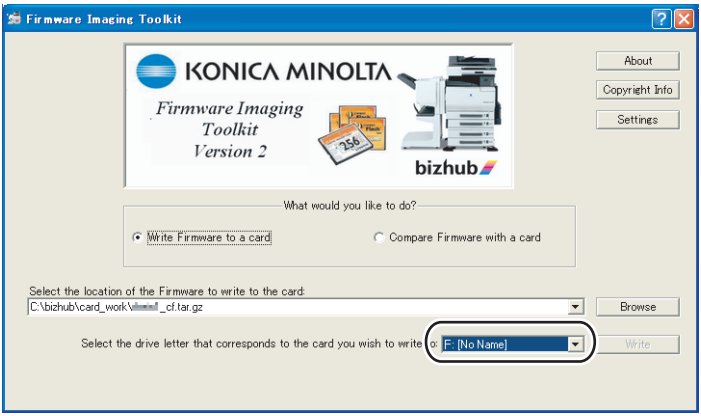

9J06F2E715DA

11. [Write] button is changed form gray into active status.
When clicking [Write] button, the following dialog is displayed.

12. In the dialog, re-confirm the firmware data and the written destination drive, and click [YES].
(If [NO] is clicked, the screen goes back of the main window.)

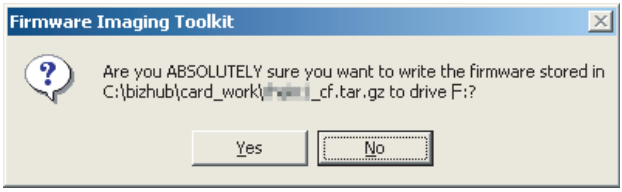

9J06F2E716DA

13. Click [Yes], and data writing starts.

NOTE

- **Writing a card is a resource intensive operation for your computer - do not attempt to multitask (use the computer for anything else) during the writing procedure.**

14. When the writing is completed, the following screen appears.
In this screen, check sums will be compared between the firmware data and one written into the compact flash.

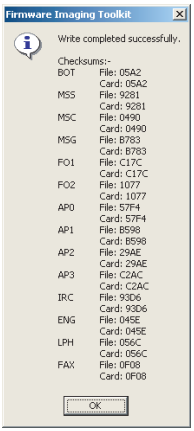

9J06F2E717DA

NOTE

- **The contents displayed on the screen may different according to the model type. The above is the screen displayed for firmware data writing of bizhub C450.**

15. Confirm each check sums are identical and quit Firmware Imaging Toolkit 2006.
16. Take out the compact flash from the PC.

NOTE

- **When removing the compact flash, be sure to check if data is written as normal and then remove it according to the precise removing method.**

3.4 Firmware rewriting by compact flash

- The firmware is updated using the compact flash.

3.4.1 Updating method

NOTE

- **NEVER remove or insert the compact flash card with the machine power turned ON.**

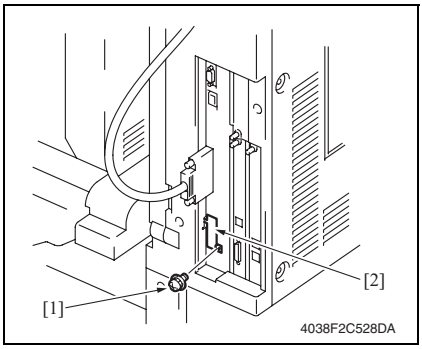

1. Open the front door, and turn OFF the main power switch.
2. Remove the screw [1] and the metal blanking plate [2].

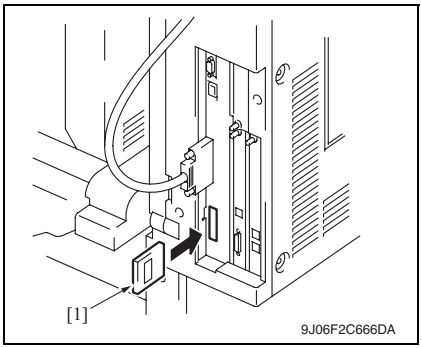

3. Insert the compact flash card [1] into the slot.

4. Turn ON the main power switch and the sub power switch.
5. Control panel shows up to four types of F/W to be updated.
6. Select the particular type of F/W to be updated. (Select [YES].)

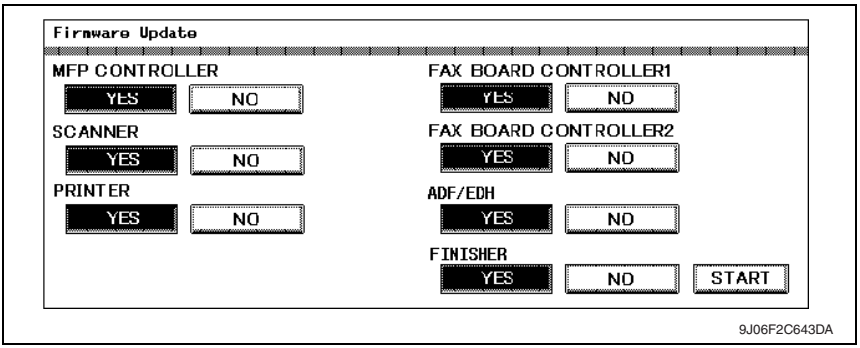

F/W to be updated	Appropriate board
MFP CONTROLLER	Printer control board (PRCB)
SCANNER	Image processing board (IPB)
PRINTER	Mechanical control board (MFPB)
FAX BOARD CONTROLLER1	Fax board (Main) *1
FAX BOARD CONTROLLER2	Fax board (Sub) *2
ADF/EDH	DF control board (DFCB) *3
FINISHER	FS control board (FSCB) *4

*1: The optional fax kit is necessary for the above procedure.
*2: The optional fax multi line ML-501 is necessary for the above procedure.
*3: The optional automatic document feeder DF-608 is necessary for the above procedure.
*4: The optional finisher FS-514 is necessary for the above procedure.

7. Press the [START]. (At this time, the Start key starts blinking red.)
8. Check that the control panel shows the message indicating that the data has been rewritten correctly ([Downloading Completed]). Check also the check sum value ([Check Sum ####]) shown on the control panel. (The Start key blinks green.)
9. Turn OFF the main power switch.
10. Remove the compact flash card from the slot.
11. Turn ON the main power switch, and close the front door.

NOTE

- **When turning the main power switch ON for the first time after the firmware is updated, data may sometimes be internally updated.**
  In that case, the following message will be displayed. Never turn the main power switch OFF until either the serial number input screen or the trouble code screen is displayed.

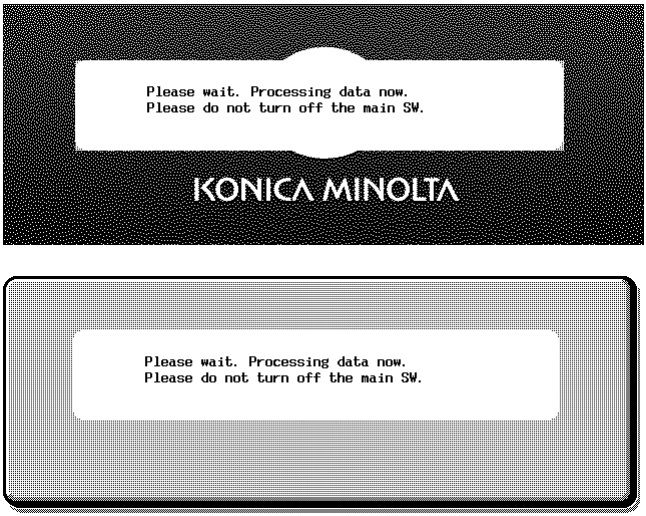

4037F2E627DA

12. Call the Service Mode to the screen.
13. Select [Firmware Version].
14. Make sure if the version of firmware is updated.

3.4.2 Action when data transfer fails

- If “NG” appears on the control panel, indicating that rewriting has been unsuccessful (in which case the Start key lights up red), take the following steps.

1. Perform the data rewriting procedure again.
2. If the procedure is abnormally terminated, change the compact flash for a new one and try another rewriting sequence.
3. If the procedure is still abnormally terminated, change the board that has caused “NG” and carry out data rewriting procedure.

MFP CONTROLLER	Printer control board (PRCB)
SCANNER	Image processing board (IPB)
PRINTER	Mechanical control board (MFPB)
FAX BOARD CONTROLLER1	Fax board (Main) *1
FAX BOARD CONTROLLER2	Fax board (Sub) *2
ADF/EDH	DF control board (DFCB) *3
FINISHER	FS control board (FSCB) *4

*1: The optional fax kit is necessary for the above procedure.
*2: The optional fax multi line ML-501 is necessary for the above procedure.
*3: The optional automatic document feeder DF-608 is necessary for the above procedure.
*4: The optional finisher FS-514 is necessary for the above procedure.

3.5 Updating the firmware with the Internet ISW

3.5.1 Outline

- [Internet ISW] is the system which gives the instruction for updating the firmware with the control panel of the main unit, so the main unit will automatically receive the firmware from the program server over a network for updating. With the Internet ISW, the firmware can be updated when the CE is at the user's without firmware data.

3.5.2 Service environment

The following conditions are necessary for using the Internet ISW function.
- The main unit is connected to such a network environment that the firmware can be downloaded on the internet using the ftp or http protocol.

The "Internet ISW" will not operate under the following conditions.
- Main power switch is set to OFF.
- Sub power switch is set to OFF.
- When the following setting is set to "ON":
  [Administrator Setting] → [Security Setting] → [Enhanced Security Mode]
- The Main unit has the job currently performing.

3.5.3 Preparations for firmware rewriting

- For using the Internet ISW, the network parameter, program server address as well as firewall address need to be set to the main unit.
- For details of each setting item, refer to main unit service manual, Adjustment/Setting "Internet ISW".

See P.381 of the main unit service manual.

A. Internet ISW Set

1. Call the Service Mode to the screen.
2. Touch [Internet ISW Set] which is available from [Internet ISW].

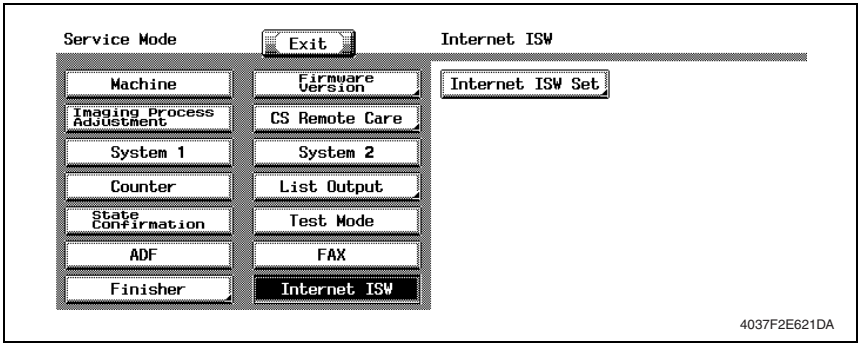

3. Touch [ON], and touch [END].

NOTE
- **Settings such as server setting, etc. will be available by selecting "ON" on this setting.**
- **When the following setting is set to "ON", "ON" cannot be selected on this setting. [Administrator Setting] → [Security Setting] → [Enhanced Security Mode]**

B. Protocol setting

- **It performs the setting concerning the protocol (ftp or http) for connecting to the Internet ISW.**
- **When connecting to the program server using a proxy server, perform the setting for a proxy server.**

Step	Connecting by http	Connecting by ftp
0	Select [Internet ISW] which is available from [Service Mode].	
1	Data Input Setting • Touch [HTTP Setting], and select [ON].	Data Input Setting • Touch [FTP Setting], and select [ON].
2	Connect Proxy • For connecting via proxy server, select [ON].	
3	Proxy Server • For connecting via proxy server, set the proxy server address and the port number. *1.* Select the [Server Address], and set the proxy server address by IP addressing scheme or FQDN scheme. *2.* Select [Port Number], and set the port number for the proxy server from 1 through 65535.	
4	Proxy Authentication • Set the login name and the password which may be necessary for authentication when accessing to the proxy server. *1.* When Authentication is necessary for accessing to the proxy server, select [Authentication], and select [ON]. *2.* Select [Log-in Name], and enter the login name on the on-screen keyboard. *3.* Select [Password], and enter the password on the on-screen keyboard.	Connection Setting • Perform the setting for accessing FTP server. *1.* Select [Port Number], and set the port number for FTP server from 1 through 65535. *2.* Select [Connection Time Out], and set the time for the connection time out from 1 through 60. *3.* When connecting in PASV mode, select [PASV Mode], and select [ON]. *PASV Mode: This mode is for transferring the file with FTP under the condition where communication is restricted such as inside the firewall. Since with PASV mode, the client with restriction sets the port number, data transmission port can be secured to enable the file transmission.
5	Connection Time-Out • Select [Connection Time-Out], and set the time for the connection time out between 30 and 300 seconds.	—

C. Forwarding access setting

- To make the access setting for the program server which stores the firmware data.

1. Select [Internet ISW] which is available from [Service Mode].
2. Touch [Forwarding Access Setting].

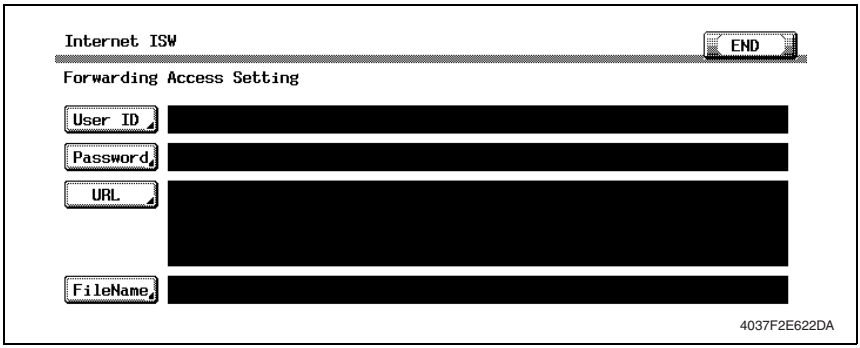

3. Select [User ID], and enter the user ID which is necessary for connecting to the program server on the on-screen keyboard, and touch [END].
4. Select [Password], and enter the password which is necessary for connecting to the program server on the on-screen keyboard, and touch [END].
5. Select [URL], and enter the directory which stores the program server address and the firmware on the on-screen keyboard by URL method, and touch [END].

NOTE

- **Enter the URL which matches to the protocol to be used.**

When connecting to http	**http://(host name or IP address)/directory name**
or	**https://(host name or IP address)/directory name**
When connecting to ftp	**ftp://(host name or IP address)/directory name**

6. Select [File Name], and enter the file name of the firmware data to be downloaded on the on-screen keyboard, and touch [END].
7. Touch [END] to finish setting.

3.5.4 Firmware rewriting

NOTE

- **When performing the Internet ISW, ask the administrator for permission beforehand.**
- **DO NOT turn OFF the main/sub power switch while downloading.**

A. Conducting rewriting on the control panel.

1. Perform the following setting.
[Service Mode] → [Internet ISW] → [Download]

2. Touch [ISW Start].

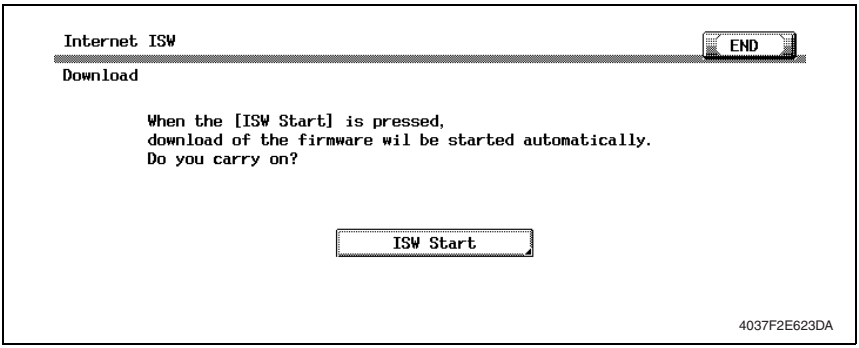

3. The main unit will automatically start running, and it starts accessing the server.

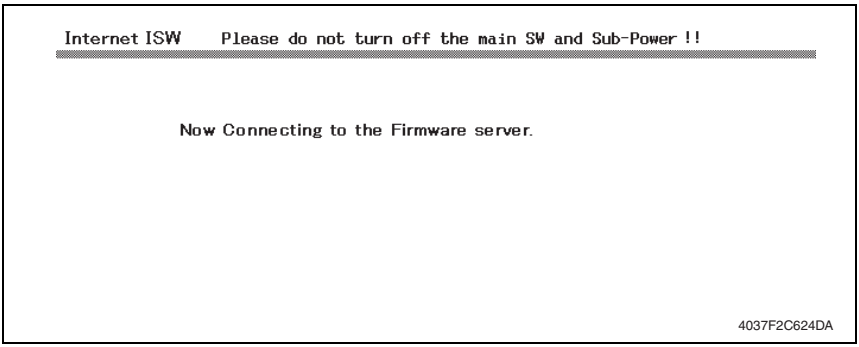

4. Select the F/W to be updated, and start downloading.

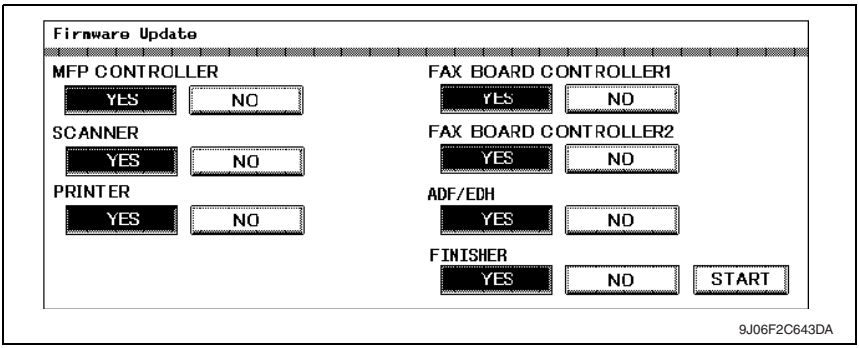

B. During firmware updating

1. The message to indicate the status will be displayed on the screen while connecting or transferring data.

C. Completed or failed

(1) Firmware updated normally

1. When the Firmware is normally updated, restart the main unit in auto or manual mode to display the outcome, and touch [OK] to return to the main screen.

NOTE

- **When turning the main power switch ON for the first time after the firmware is updated, data may sometimes be internally updated.**
  In that case, the following message will be displayed. Never turn the main power switch OFF until either the serial number input screen or the trouble code screen is displayed.

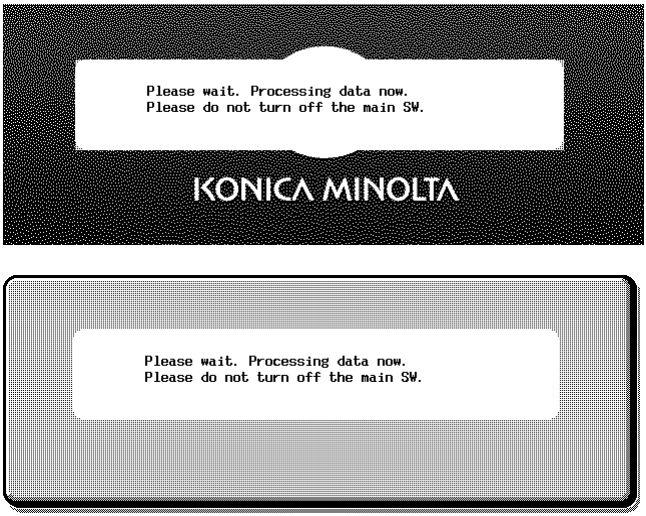

4037F2E627DA

(2) Failing to update the firmware due to the network trouble

1. When updating failed to complete due to the trouble on connecting to the network, an error code and the message will be displayed.
2. Restart the main unit in auto or manual mode, and touch [OK]. It can be used with the firmware version before conducting updating.
3. Check the settings for the network by error codes, and try updating again.

NOTE

- **For error codes, refer to “Error code list for the Internet ISW”.**

See P.33

(3) Failing to update the firmware after downloading has started

1. Once firmware updating has started, the ROM in the main unit will be deleted.
   When it failed right after updating has started, restart the main unit, and shift to the standby screen to retry downloading.
2. When updating on the control panel, touch [settings] on the standby screen, and check the Network settings again.
   Touch [Download], and restart the Internet ISW.

NOTE

- **Return to the standby screen without fail after turning the main power switch OFF/ON if the firmware is not updated.**
- **Firmware can be updated with the Compact flash with the main power switch OFF.**

D. Confirming the firmware version

1. Call the Service Mode to the screen.
2. Select the [Firmware Version].
3. Check if the firmware version is updated.

3.5.5 Error code list for the Internet ISW

- When a trouble occurred while conducting the Internet ISW and it was not normally connected, the message on the status and the error code will be displayed on the control panel.
  When updating with CS Remote Care, the error code will be sent to the CS Remote Care center.

<Sample display>

```
Internet ISW

Failed to connect to the Firmware server.
Turn main switch OFF and ON.
Please do not turn  Sub-Power Off!

Code: 0x00003200
```

4037F2C619DA

Error code Control panel	Description	Countermeasure
0x00000001	Illegal error on the control	• Check if the following setting is set to “Valid”. [Service Mode] → [Internet ISW] → [Internet ISW setting] • Check the status of the following setting. [Service Mode] → [Internet ISW] → [Transfer access setting] • If the above process does not solve the problem, inform the corresponding error code to the KONICA MINOLTA.
0x00000010	Parameter error	• Check if the following setting is set to “Valid”. [Service Mode] → [Internet ISW] → [Internet ISW setting] • If the above process does not solve the problem, inform the corresponding error code to KONICA MINOLTA.
0x00111000	Error concerning the network • Connection has been completed.	• Check the User’s network environment. (LAN cable’s connection) • Check the status of the following setting. [Service Mode] → [Internet ISW] → [Transfer access setting] • Check to see if the FTP server operates normally.

Error code Control panel	Description	Countermeasure
0x00111001	Error concerning the network • It cannot be connected to the server.	• Check the network environment of the User. • Check to see if the FTP server operates normally.
0x00111100	Error concerning the network • Communication timeout.	
0x00111101	Error concerning the network • Disconnection occurred	• Check the network environment of the User. • Check to see if the FTP server operates normally.
0x00111110	Error concerning the network • The network is not connected.	
0x00110010	Error concerning the network • Others	
0x00001###	FTP error • Reply code when it failed to be connected	• Check to see if FTP server normally operates. • Check the IP address, user's name, etc.
0x00002###	FTP error • Error reply code for the user command or pass command	• Check to see if FTP server operates normally.
0x00003###	FTP error • Error reply code for CWD command	
0x00004###	FTP error • Error reply code for the TYPE command.	• Check to see if FTP server operates normally.
0x00005###	FTP error • Error reply code for the PORT command.	
0x00006###	FTP error • Error reply code for the PASV command.	• Check to see if FTP server operates normally. • Set the PASV mode to "Invalid", and try it again.
0x00007###	FTP error • Error rely code for the RETR command.	• Check to see if FTP server operates normally. • Wait for about 30 minutes and try it again.
0x1000 0100	• It cannot be accepted because of the job currently being executed. • ISW being executed by other method.	• Wait for the current job to be completed and try it again.
0x10000101	• It cannot be accepted because the sub power switch is OFF.	• Turn sub power switch ON and try it again.
0x10000102	• The Internet ISW is already being executed.	• Wait for the current Internet ISW to be completed.
0x10000103	• It failed to prohibit the job. (It failed to lock the operation.) → It failed to lock the job because the operation is already locked with PSWC, etc.	• Check if the following setting is set to "Valid". [Service Mode] → [Internet ISW] → [Internet ISW setting] • If the above process does not solve the problem, inform the corresponding error code to the KONICA MINOLTA.
0x10000104	• There is no space for F/W data to be downloaded.	
0x10000106	• Check sum error	

Error code Control panel	Description	Countermeasure
0x10000107	File access error • The file downloaded has an error. • The header of the file which has been read has an error. • The size of the file to be downloaded is too large. • When it is identified to be the different type of F/W.	• Check to see if the downloaded F/W is of the correct type.
0x10000108	• The area F/W is stored is destroyed, and another ISW is necessary.	• Wait until ISW is automatically executed on MFP side.
0x20000000	The temporary error when running the subset • When starting the Internet ISW in a normal program, the rebooting will start and the Internet ISW will be executed with the subset program. During the process by the subset program, it has to be in the “Failed” status unless the Internet ISW is successfully conducted. This code is used temporarily to make it in error status.	

Blank Page

Adjustment/Setting

4. Checking the image controller setting

- Whenever the controller is mounted, it is necessary to select “Controller 0” in [Image Controller Setting].

1. Call the Service Mode to the screen.
2. Touch [System 2].
3. Check that “Controller 0” is selected in [Image Controller Setting].

NOTE

- **If the setting is changed, be sure to turn OFF the main power switch and turn it ON again more than 10 seconds after. The change of the setting becomes valid when the main power switch is turned OFF and ON after the appropriate change has been made on the panel.**

A. Note on returning the setting from “Controller 1” to “Controller 0.”

- Selecting “Controller 0” will initialize the following settings made while “Controller 1” was selected. Reset the following items as necessary when using the internal standard controller.

<Control panel on the machine>

- Setting items included in [Network Setting] available from [Administrator Setting]. (Except [Status Notification Setting] and [Prefix/Suffix Setting] available from the following setting. [Administrator Setting] - [Network Setting] - [Detail Setting].)
- [Administrator Setting]-[User Authentication/Account Track]-[General Settings]-[External Server]
- [Administrator Setting]-[System Connection]-[OpenAPI Setting]
- ⚠1 Mailbox Destination (scan)
- Information on the original specified by the Program Destination
- [User Setting] → [Initial Setting] → [Scan]

<PageScope Web Connection>

- SSL/TLS

Blank Page

Troubleshooting

5. Checking the system configuration

- When a malfunction occurs, let the printer print a configuration page to check for system configuration.

1. Press the Utility/Counter key.
2. Touch [User Setting] → [Printer Setting] → [Print Reports].
3. Touch [Configuration Page] and press the Start key.

6. Status codes

Code	Description	Action
CA051	Standard controller configuration failure	Change the Printer control board (PRCB).
CA052	Faulty controller hardware	Change the Printer control board (PRCB).
CA053	Controller start failure	Change the Printer control board (PRCB) if the problem occurs again when turning OFF the Main Power Switch and turn it ON again more than 10 seconds after.

See P.105 of the main unit service manual.

7. Troubleshooting procedures

7.1 Unable to print over the network.

	Check		Possible Cause	Action	Remark
1	Is the print job displayed on the machine control panel?	Yes	An error on machine side (paper running out, toner running out, etc.)	Correct the error.	See “User’s Guide [Copy Operations]” of the machine.
			Waiting its turn	Check the machine control panel for jobs in print queue. Priority may be changed as necessary.	
			The job is locked.	Enter the password to unlock the job.	See “User’s Guide [Print Operations].”
			The correct division ID has not been entered.	Enter the correct division ID in the printer driver and try re-transmitting the job again. (access code)	
		No	Data is yet to be received.	Go to item 2.	

	Check		Possible Cause	Action	Remark
2	Is the response of Ping sent from the PC to the machine?	Yes	The print destination port setting is wrong.	Set the correct port.	See “User’s Guide [Print Operations].”
			PC operates erratically temporarily.	Restart the PC.	
			Printer driver incorrectly installed	Uninstall the printer driver through the proper steps and then reinstall it properly.	See “User’s Guide [Print Operations].”
		No	Controller board (MFP Control Board) operates erratically temporarily.	Restart the controller board.	Turn OFF the Main Power Switch and turn it ON again more than 10 seconds after.
			Network cable is disconnected or a relay device is faulty.	Reconnect the cable and restart or change the faulty relay device.	Check with the controller network LED.
			IP address and/or subnet mask incorrectly set.	Set the correct IP address and subnet mask.	See “TCP/IP Setting” in Installation Guide.

7.2 Unable to transmit data through Scan to FTP.

	Check	Possible Cause	Action	Remark
1	The message “Failed to connect to the destination” appears.	The FTP server is not in service.	Check with the network administrator.	
		IP address of the FTP server is wrong.	Check with the network administrator and enter the correct IP address.	See “User’s Guide [Network Scanner Operations].”
		Proxy setting is wrong.	Check with the network administrator and make the correct proxy setting.	
		Port number is wrong.	Check with the network administrator and enter the correct port number.	
		A directory not existing in the FTP server is specified.	Check with the network administrator and enter the correct directory.	
		Failed to log on to the FTP server because of the wrong user account.	Check with the network administrator and enter the correct user name and password.	
		A timeout condition occurs.	Set a longer value for “FTP Connection Timeout.” The timeout value depends on the network’s traffic conditions and load on the FTP server.	
2	The message “Server Connect error” appears.	The network is disconnected during file transfer.	Send Ping from PC to the controller and FTP server to check to see if both parties are connected to the network or not.	
		The FTP server hard disk becomes full during file transfer.	Check with the network administrator.	
		The FTP server stops during file transfer.	Check with the network administrator.	

7.3 Unable to transmit data through Scan to E-Mail.

	Check	Possible Cause	Action	Remark
1	The message "Server Connect error" appears.	The SMTP server is not in service.	Check with the network administrator.	
		IP address of the SMTP server is wrong.	Check with the network administrator and enter the correct IP address.	See "User's Guide [Network Scanner Operations]."
		Port number is wrong.	Check with the network administrator and enter the correct port number.	
		A timeout condition occurs.	Set a longer value for "SMTP Connection Timeout." The timeout value depends on the network's traffic conditions and load on the FTP server.	
		The network is disconnected during file transfer.	Send Ping from PC to the controller and SMTP server to check to see if both parties are connected to the network or not.	
2	The message "E-mail Size Over" appears.	The size of the scan data exceeds the upper limit value set for maximum e-mail size.	Decrease resolution to make small the data size or change the setting for scanned file separation and binary division as necessary so that the scan data does not exceed the maximum e-mail size.	See "User's Guide [Network Scanner Operations]."

7.4 E-mail does not reach the destination when transmission through Scan to E-Mail is completed.

	Check		Possible Cause	Action	Remark
1	An error message is returned from the mail server.	Yes	The destination mail address is wrong.	Enter the correct mail address.	See "User's Guide [Network Scanner Operations]."
		No	The receiving end is being unable to receive, or is not receiving, mail stored in the POP3 server.		

KONICA MINOLTA

SERVICE MANUAL

FIELD SERVICE

Duplex Unit (AD-503)

2006.03

KONICA MINOLTA BUSINESS TECHNOLOGIES, INC. Ver. 1.0

Revision history

After publication of this service manual, the parts and mechanism may be subject to change for improvement of their performance.
Therefore, the descriptions given in this service manual may not coincide with the actual machine.

When any change has been made to the descriptions in the service manual, a revised version will be issued with a revision mark added as required.

Revision mark:

- To indicate clearly a section revised, show △1 to the left of the revised section.
  A number within △1 represents the number of times the revision has been made.

- To indicate clearly a section revised, show ▲1 in the lower outside section of the corresponding page.
  A number within ▲1 represents the number of times the revision has been made.

NOTE

Revision marks shown in a page are restricted only to the latest ones with the old ones deleted.

- When a page revised in Ver. 2.0 has been changed in Ver. 3.0:
  The revision marks for Ver. 3.0 only are shown with those for Ver. 2.0 deleted.
- When a page revised in Ver. 2.0 has not been changed in Ver. 3.0:
  The revision marks for Ver. 2.0 are left as they are.

2006/03	1.0	—	Issue of the first edition
Date	Service manual Ver.	Revision mark	Descriptions of revision

CONTENTS

Duplex Unit (AD-503)

General

1. Product specifications 1

Maintenance

2. Periodical check 3
2.1 Maintenance procedure (Periodical check parts) 3
2.1.1 Cleaning transport roller/roll 1, 2 3
2.1.2 Cleaning transport roller/roll 3 3
2.1.3 Cleaning ventilation section 4
3. Other 5
3.1 Disassembly/Adjustment prohibited items 5
3.2 Disassembly/Assembly list (Other parts) 6
3.3 Disassembly/Assembly procedure 6
3.3.1 Duplex unit 6

Adjustment/Setting

4. How to use the adjustment section 7
5. Sensor check 8
5.1 Check procedure 8
5.2 Sensor check list 8
5.2.1 Sensor check screen 8
5.2.2 Sensor check list 8
6. Mechanical adjustment 9
6.1 Adjusting the paper reference position 9

Troubleshooting

7. Jam display 11
7.1 Misfeed display 11
7.1.1 Misfeed display resetting procedure 11
7.2 Sensor layout 12
7.3 Solution 13
7.3.1 Initial check items 13
7.3.2 Duplex unit pre-registration section misfeed (AD-503) 13
7.3.3 Duplex unit transport section misfeed (AD-503) 14

Blank Page

General

1. Product specifications

A. Type

Name	Duplex unit (AD-503)
Type	Switchback and circulating duplex unit
Installation	Mounted on the right side door of main unit
Document alignment	Center

B. Paper type

Type	Plain paper	64 to 90 g/m^2 (17 to 24 lb)
	Thick paper 1	91 to 150 g/m^2 (24.25 to 40 lb)
	Thick paper 2	151 to 209 g/m^2 (40.25 to 55.5 lb)
	Thick paper 3 *1	210 to 256 g/m^2 (55.75 to 68 lb)
Size	A5/A5S to A3, A3Wide (12 x 18), 5 $^1/_2$ x 8 $^1/_2$ to 11 x 17, 8 x 13 to 8 $^1/_2$ x 13, 8K, 16K/16KS	
Print paper size	Width	139.7 to 311.1 mm (5.5 x 12.25 inch)
	Length	148.0 to 457.2 mm (5.75 x 18 inch)

*1: Image is not guaranteed when thick paper 3 is used.

C. Machine specifications

Power requirements	DC 24 V ± 10% (supplied from the main unit)
	DC 5 V ± 5% (supplied from the main unit)
Max. power consumption	17 W or less
Dimensions	110 mm (W) x 440 mm (D) x 345 mm (H) 4.25 inch (W) x 17.25 inch (D) x 13.5 inch (H)
Weight	3.0 kg (6.5 lb)

D. Operating environment

Conforms to the operating environment of the main unit.

NOTE

- **These specifications are subject to change without notice.**

Blank Page

Maintenance

2. Periodical check

2.1 Maintenance procedure (Periodical check parts)

NOTE

- **The alcohol described in the cleaning procedure of maintenance represents the isopropyl alcohol.**

2.1.1 Cleaning transport roller/roll 1, 2

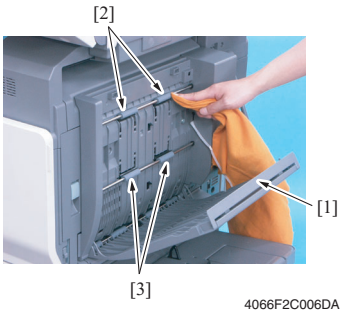

4066F2C006DA

1. Open the duplex unit door [1].
2. Using a soft cloth dampened with alcohol, wipe the transport roller/roll 1 [2], 2 [3] clean of dirt.

2.1.2 Cleaning transport roller/roll 3

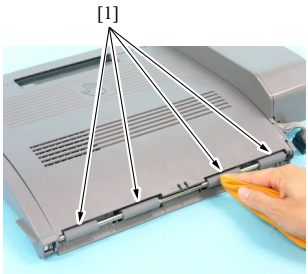

4066F2C504DA

1. Remove the duplex unit.
See P.6
2. Using a soft cloth dampened with alcohol, wipe the transport roller/roll 3 [1] clean of dirt.

2.1.3 Cleaning ventilation section

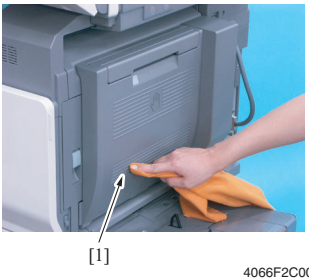

4066F2C007DA

1. Using a soft cloth dampened with alcohol, wipe the outside of the ventilation section [1] clean of dirt.

4066F2C008DA

2. Open the duplex unit door [1].
3. Using a soft cloth dampened with alcohol, wipe the inside of the ventilation section [2] clean of dirt.

3. Other

3.1 Disassembly/Adjustment prohibited items

A. Paint-locked screws

NOTE
- **Paint-locked screws show that the assembly or unit secured can only be adjusted or set at the factory and should not be adjusted, set, or removed in the field.**

B. Red painted screws

NOTE
- **When the screws are removed, the red paint is coated on the points where readjustment is required.**
- **Once the red painted screw is removed or loosened, you should make adjustment. Accordingly check the adjustment items in this manual and make necessary adjustment. Note that when two or more screws are used on the part in questions, only one representative screw may be marked with red paint.**

C. Variable resistors on board

NOTE
- **Do not turn the variable resistors on boards for which no adjusting instructions are given in Adjustment/Setting.**

D. Removal of PWBs

⚠ CAUTION
- **When removing a circuit board or other electrical component, refer to "SAFETY AND IMPORTANT WARNING ITEMS" and follow the corresponding removal procedures.**
- **The removal procedures given in the following omit the removal of connectors and screws securing the circuit board support or circuit board.**
- **When it is absolutely necessary to touch the ICs and other electrical components on the board, be sure to ground your body.**

3.2 Disassembly/Assembly list (Other parts)

No.	Section	Part name	Ref. page
1	Unit	Duplex unit	P.6

3.3 Disassembly/Assembly procedure

3.3.1 Duplex unit

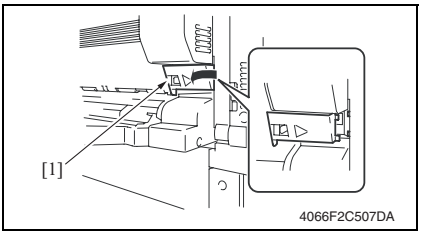

1. Release the tab, and remove the connector cover [1].

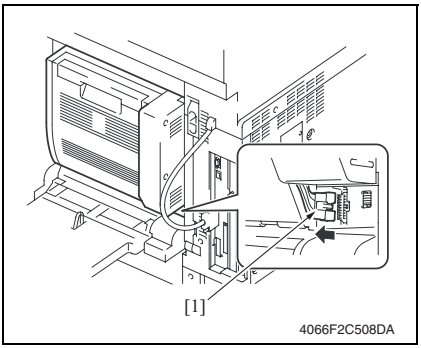

2. Disconnect the connector [1].

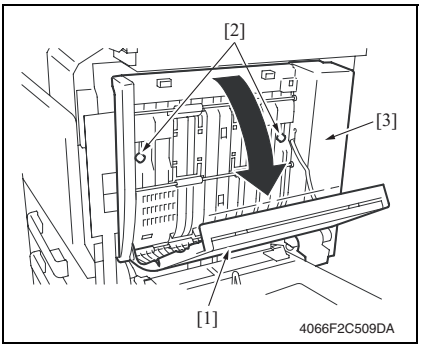

3. Open the duplex unit door [1].
4. Remove two shoulder screws [2], and remove the duplex unit [3].

Adjustment/Setting

4. How to use the adjustment section

- “Adjustment/Setting” contains detailed information on the adjustment items and procedures for this machine.
- Throughout this “Adjustment/Setting,” the default settings are indicated by “ ”.

Advance checks

Before attempting to solve the customer problem, the following advance checks must be made. Check to see if:

- The power supply voltage meets the specifications.
- The power supply is properly grounded.
- The machine shares the power supply with any other machine that draws large current intermittently (e.g., elevator and air conditioner that generate electric noise).
- The installation site is environmentally appropriate: high temperature, high humidity, direct sunlight, ventilation, etc.; levelness of the installation site.
- The original has a problem that may cause a defective image.
- The density is properly selected.
- The original glass, slit glass, or related part is dirty.
- Correct paper is being used for printing.
- The units, parts, and supplies used for printing (developer, PC drum, etc.) are properly replenished and replaced when they reach the end of their useful service life.
- Toner is not running out.

⚠ CAUTION

- **Be sure to unplug the power cord of the machine before starting the service job procedures.**
- **If it is unavoidably necessary to service the machine with its power turned ON, use utmost care not to be caught in the scanner cables or gears of the exposure unit.**
- **Special care should be used when handling the fusing unit which can be extremely hot.**
- **The developing unit has a strong magnetic field. Keep watches and measuring instruments away from it.**
- **Take care not to damage the PC drum with a tool or similar device.**
- **Do not touch IC pins with bare hands.**

5. Sensor check

5.1 Check procedure

- To allow sensors to be checked for operation easily and safely, data applied to the IC on the board can be checked on the panel with the main unit in the standby state (including a misfeed, malfunction, and closure failure condition).

A. Procedure

1. Call the Service Mode to the screen.

See P.304 of the main unit service manual.

2. Touch [State Confirmation].

3. Touch [Sensor Check].

4. Touch [2].

5.2 Sensor check list

5.2.1 Sensor check screen

- This is only typical screen which may be different from what are shown on each individual main unit.

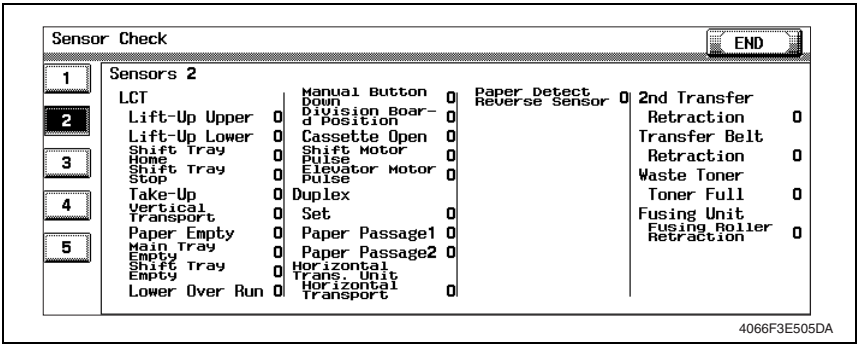

5.2.2 Sensor check list

A. Sensors 2

Symbol	Panel display		Part/Signal name	Operation characteristics/ Panel display	
				1	0
PCI DU	Duplex	Set	Duplex unit door set sensor	Open	Close
PC1 DU		Paper Passage1	Duplex unit transport sensor1	Paper present	Paper not present
PC2 DU		Paper Passage2	Duplex unit transport sensor2	Paper present	Paper not present

6. Mechanical adjustment

6.1 Adjusting the paper reference position

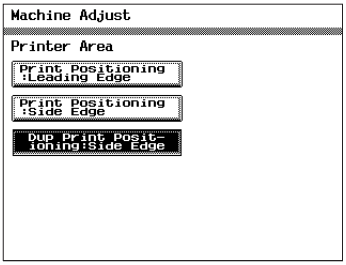

4066F3E503DA

1. Call the Service Mode to the screen. See P.304 of the main unit service manual.
2. Touch [Machine] → [Printer Area] → [Dup Print Positioning: Side Edge].

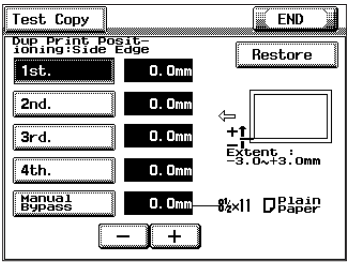

4066F3E504DA

3. Touch [1st.] and then press the Start key. A test print will then be produced.

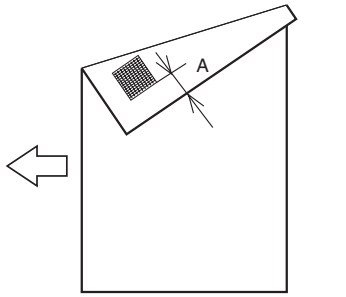

4061F3C809DA

4. Measure the width of printed reference line A.
   Specifications: 3.0 mm ± 2.0 mm
5. If the measured width A falls outside the specified range, enter the correction value.
6. Produce another test print and check for width A.

7. Touch [END].
8. Touch [Exit] on the Service Mode screen.
9. Turn OFF the main power switch. then, wait for 10 sec. or more and turn ON the main power switch.

Blank Page

Troubleshooting

7. Jam display

7.1 Misfeed display

- When misfeed occurs, message, misfeed location “Blinking” and paper location “Lighting” are displayed on the touch panel of the main unit.

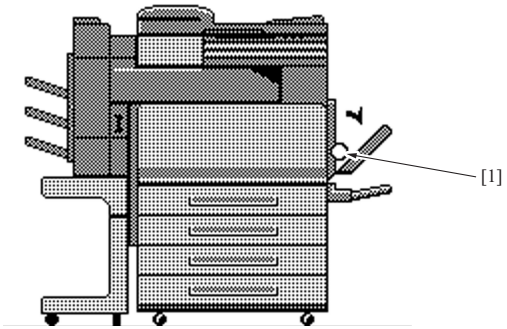

4066F4C501DA

No.	Code	Misfeed location	Misfeed access location	Action
[1]	9201	Duplex unit pre-registration section misfeed	Duplex unit door	P.13
	9301	Duplex unit transport section misfeed		P.14

7.1.1 Misfeed display resetting procedure

- Open the corresponding door, clear the sheet of paper misfed, and close the door.

7.2 Sensor layout

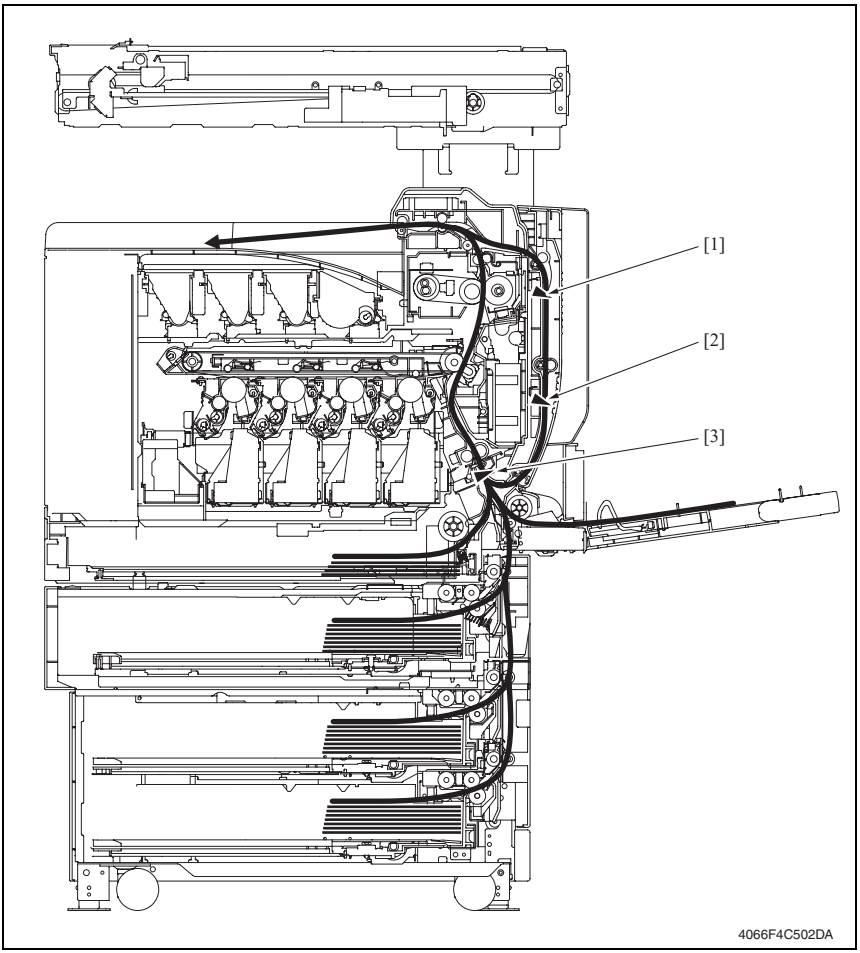

[1]	Duplex unit transport sensor 1	PC1 DU	[3]	Registration roller sensor	PC1
[2]	Duplex unit transport sensor 2	PC2 DU			

7.3 Solution

7.3.1 Initial check items

- When a paper misfeed occurs, first perform the following initial check items.

Check item	Action
Does paper meet product specifications?	Replace paper.
Is the paper curled, wavy, or damp?	Replace paper. Instruct the user on the correct paper storage procedures.
Is a foreign object present along the paper path, or is the paper path deformed or worn?	Clean the paper path and replace if necessary.
Are rolls/rollers dirty, deformed, or worn?	Clean or replace the defective roll/roller.
Are the edge guide and trailing edge stop at the correct position to accommodate the paper?	Set as necessary.
Are the actuators operating correctly?	Correct or replace the defective actuator.

7.3.2 Duplex unit pre-registration section misfeed (AD-503)

A. Detection timing

Type	Description
Detection of misfeed at duplex pre-registration section	The registration roller sensor (PC1) is not blocked even after the lapse of a given period of time after the duplex paper take-up sequence started.
Duplex unit pre-registration section loop registration reversing jam detection	Rise timing of load for registration is earlier than the one for making the loop at front of the registration roller at pre-registration take-up.

B. Action

Relevant electrical parts	
Registration roller sensor (PC1)	Duplex control board (PWB-A DU) Mechanical control board (MFPB)

Step	Action	Wiring diagram	
		Control signal	Location (Electrical components)
1	Initial check items	—	—
2	PC1 sensor check	MFPB CNSEN-3 (ON)	bizhub C300/C352 C-3
3	PWB-A DU replacement	—	—
4	MFPB replacement	—	—

7.3.3 Duplex unit transport section misfeed (AD-503)

A. Detection timing

Type	Description
Detection of misfeed at duplex Transport section	The duplex unit transport sensor 2 (PC2 DU) is not blocked even after the set period of time has elapsed after the duplex unit transport sensor 1 (PC1 DU) is blocked by the paper.
	The duplex unit transport sensor 1 (PC1 DU) is not unblocked even after the set period of time has elapsed after the duplex unit transport sensor 1 (PC1 DU) is blocked by the paper.
	The duplex unit transport sensor 2 (PC2 DU) is not unblocked even after the set period of time has elapsed after the duplex unit transport sensor 2 (PC2 DU) is blocked by the paper.
Detection of paper remaining in the duplex unit transport section	The duplex unit transport sensor 1 (PC1 DU) or duplex unit transport sensor 2 (PC2 DU) are blocked when the main power switch is set to on, a door or cover is opened and closed, or a misfeed or malfunction is reset.

B. Action

Relevant electrical parts	
Registration roller sensor (PC1) Duplex unit transport sensor 1 (PC1 DU) Duplex unit transport sensor 2 (PC2 DU) Duplex unit switchback motor (M1 DU) Duplex unit transport motor (M2 DU)	Duplex control board (PWB-A DU) Mechanical control board (MFPB)

Step	Action	Wiring diagram	
		Control signal	Location (Electrical components)
1	Initial check items	—	—
2	PC1 sensor check	MFPB CNSEN-3 (ON)	bizhub C300/C352 C-3
3	PC1 DU sensor check	—	bizhub C300/C352 Q-21
4	PC2 DU sensor check	—	bizhub C300/C352 Q-22
5	M1 DU operation check	PWB-A DU PJ4A DU-1 to 4	bizhub C300/C352 S-22
6	M2 DU operation check	PWB-A DU PJ5A DU-1 to 4	bizhub C300/C352 S-22 to 23
7	PWB-A DU replacement	—	—
8	MFPB replacement	—	—

KONICA MINOLTA

SERVICE MANUAL

FIELD SERVICE

DF-608

2006.08

KONICA MINOLTA BUSINESS TECHNOLOGIES, INC. Ver. 2.0

Revision history

After publication of this service manual, the parts and mechanism may be subject to change for improvement of their performance.
Therefore, the descriptions given in this service manual may not coincide with the actual machine.

When any change has been made to the descriptions in the service manual, a revised version will be issued with a revision mark added as required.

Revision mark:

- To indicate clearly a section revised, show △1 to the left of the revised section.
  A number within △1 represents the number of times the revision has been made.

- To indicate clearly a section revised, show ▲1 in the lower outside section of the corresponding page.
  A number within ▲1 represents the number of times the revision has been made.

NOTE

Revision marks shown in a page are restricted only to the latest ones with the old ones deleted.

- When a page revised in Ver. 2.0 has been changed in Ver. 3.0:
  The revision marks for Ver. 3.0 only are shown with those for Ver. 2.0 deleted.
- When a page revised in Ver. 2.0 has not been changed in Ver. 3.0:
  The revision marks for Ver. 2.0 are left as they are.

Date	Service manual Ver.	Revision mark	Descriptions of revision
2006/08	2.0	△1	Error corrections
2006/03	1.0	—	Issue of the first edition

CONTENTS

DF-608

General

1. Product specifications 1

Maintenance

2. Periodical check 5
2.1 Maintenance procedure (Periodical check parts) 5
2.1.1 Pick-up roller/feed roller 5
2.1.2 Separation roller 6
2.1.3 Miscellaneous rolls 8
2.1.4 Miscellaneous rollers 9
2.1.5 Cleaning of the scanning guide 11
2.1.6 Cleaning of the reflective sensor section 12
3. Service tool 13
3.1 CE tool list 13
4. Other 14
4.1 Disassembly/Adjustment prohibited items 14
4.2 Disassembly/Assembly/Cleaning list (Other parts) 15
4.2.1 Disassembly/Assembly parts list 15
4.3 Disassembly/Assembly procedure 15
4.3.1 Feed cover 15
4.3.2 Front cover 16
4.3.3 Rear cover 16
4.3.4 Document feed tray front cover 18
4.3.5 Reverse automatic document feeder 18
4.3.6 DF control board 19
4.3.7 Document width detection variable resistor 20
4.3.8 Replacing the stamp unit 22
4.3.9 Replacing the stamp 23

Adjustment/Setting

5. How to use the adjustment section 25
6. Service Mode 26
6.1 Service Mode setting procedure 26
6.2 ADF setting procedure 26

6.2.1 Original Stop Position 26
6.2.2 Registration Loop Adj. 26
6.2.3 Auto Stop Position Adjustment 26
6.2.4 Paper Passage 27
6.2.5 Sensor Check 27
6.2.6 Original Tray Width 30
6.2.7 Read Pos Adj 30
6.2.8 Feed Zoom 30
6.2.9 Scanning Light Adjustment 30
7. Mechanical adjustment 31
7.1 Adjusting the height 31
7.2 Adjusting skew feed 32
7.3 Original Stop Position 34
7.4 Original Tray Width 40
7.5 Read Pos Adj 43
7.6 Feed Zoom 45

Troubleshooting

8. Jam display 49
8.1 Initial check items 49
8.2 Misfeed display 49
8.2.1 Misfeed display resetting procedure 49
8.3 Sensor layout 50
8.4 Solution 51
8.4.1 Turnover section misfeed 51
8.4.2 Paper feed section misfeed 52
8.4.3 Transport section misfeed 53
8.4.4 Paper exit section misfeed 54
8.4.5 Image reading section misfeed 55
9. Trouble code 56
9.1 Trouble code list 56
9.2 Solution 57
9.2.1 C8101: Pressure/retraction mechanism failure before image reading 57
9.2.2 C8102: Pressure/retraction mechanism failure at the turnover section 57
9.2.3 C8103: Lift up mechanism failure 58
9.2.4 C8104: Original glass travel failure 58
9.2.5 C8105: Original feeding interval failure 59
9.2.6 C8302: Cooling fan failure 59

9.2.7 CC156: ADF ROM malfunction 60
10. Set error detection 60

Blank Page

General

1. Product specifications

A. Type

Name	Reverse automatic document feeder	
Type	Paper feed section	Paper feed from top of stack
	Image reading section	Sheet-through system
	Turnover section	Switchback system
	Exit section	Straight exit system
Installation	Screw cramp to the main unit	
Document alignment	Center	
Document loading	Face up	

B. Functions

Modes	Standard mode / Mixed original detection mode / FAX mode

C. Paper type

Type of document	Standard mode Plain paper	1-sided mode 35 to 210 g/m^2 (9.25 to 55.75 lb)
		2-sided mode 50 to 128 g/m^2 (13.25 to 34 lb)
	Mixed original detection mode Plain paper	1-sided / 2-sided mode 50 to 128 g/m^2 (13.25 to 34 lb)
	FAX mode Plain paper	1-sided mode 35 to 210 g/m^2 (9.25 to 55.75 lb)
		2-Sided Mode 50 to 128 g/m^2 (13.25 to 34 lb)
Detectable document size*1	Standard mode/FAX mode	Metric area: B6S to A3 Inch area: 5 $^1/_2$ x 8 $^1/_2$ to 11 x 17
Capacity	100 sheets (80 g/m^2) or stack of 14 mm and below	

*1: For the combined original detection mode, refer to the mixed original detection enabled size combination table.

D. Paper feed prohibited originals

- If fed, trouble occurrence will be highly possible.

Type of original	Possible trouble
Sheets stapled or clipped together	Paper feed failure, damaged sheet, defective drive mechanism due to jammed staples or clips
Sheets glued together	Paper feed failure, damaged sheet
Book original	Paper feed failure, damaged sheet
Original weighing less than 35 g/m^2 (9.25 lb) or 210 g/m^2 (55.75 lb) or more	Paper feed failure, transport failure
Sheets folded, torn or wrinkled	Paper feed failure, damaged sheet, transport failure
Sheets severely curled	Sheets misfed due to being dog-eared or fed in askew
OHP film (Transparency film)	Paper feed failure, transport failure
Label paper	Paper feed failure, transport failure
Offset master paper	Paper feed failure, transport failure
Glossy photographic paper or glossy enamel paper	Transport failure, damaged sheet
Sheets clipped or notched	Damaged sheet, transport failure
Sheets patched	Patched part folded or torn sheet

E. Paper feed not guaranteed originals

- If fed, paper feed will be possible to some extent but trouble occurrence will be possible.

Type of Original	Possible Trouble
Sheets lightly curled (Curled amount: 10 to 15 mm)	Dog-eared, exit failure, transport failure
Heat sensitive paper	Edge folded, exit failure, transport failure
Ink jet paper	Paper feed failure, transport failure
Sheets with smooth surface (Coated paper)	Paper feed failure, transport failure
Intermediate paper	Paper feed failure, transport failure
Paper immediately after paper exit from the main unit	Paper feed failure, transport failure
Paper with many punched holes (e.g., loose leaf) limited to vertical feeding	Multi-page feed due to flashes from holes
Sheets with 2 to 4 holes	Transport failure
Sheets two-folded or Z-folded	Transport failure, image deformation
Sheets with rough surface (e.g., letterhead)	Paper feed failure

F. Mixed original feed chart

For metric

	Max. original size	297 mm		257 mm		210 mm		182 mm	148 mm	123 mm
Mixed original size		A3	A4	B4	B5	A4S	A5	B5S	A5S	B6S
297 mm	A3	OK	OK	-	-	-	-	-	-	
	A4	OK	OK	-	-	-	-	-	-	
257 mm	B4	OK	OK	OK	OK	-	-	-	-	
	B5	OK	OK	OK	OK	-	-	-	-	
210 mm	A4S	OK	OK	OK	OK	OK	OK	-	-	
	A5	NG	NG	OK	OK	OK	OK		-	
182 mm	B5S	NG	NG	OK	OK	OK	OK	OK		
148 mm	A5S	NG	NG	NG	NG	NG	NG	NG	OK	
123 mm	B6S	NG	NG	NG	NG	NG	NG	NG	OK	OK

For inch

	Max. original size	11		8 1/2			5 1/2
Mixed original size		11 x 17	8 1/2 x 11	8 1/2 x 14	8 1/2 x 11S	5 1/2 x 8 1/2	5 1/2 x 8 1/2S
11	11 x 17	OK	OK	-	-	-	-
	8 1/2 x 11	OK	OK	-	-	-	-
8 1/2	8 1/2 x 14	OK	OK	OK	OK	OK	-
	8 1/2 x 11S	OK	OK	OK	OK	OK	-
	5 1/2 x 8 1/2	NG	NG	OK	OK	OK	-
5 1/2	5 1/2 x 8 1/2S	NG	NG	NG	NG	NG	OK

OK	Mixed original feed available (Tilted with in 1.5% or less)
NG	No. mixed original feed
-	Can not set original

G. Machine specifications

Power requirements	DC 24 V (supplied from the main unit)
	DC 5 V (generated within the DF-608)
⚠1 Max. power consumption	60 W or less
Dimensions	592 mm (W) x 585 mm (D) x 130 mm (H) 23.25 inch (W) x 23 inch (D) x 5 inch (H)
Weight	16.0 kg (35.25 lb)

H. Operating environment

Conforms to the operating environment of the main unit.

NOTE

- **These specifications are subject to change without notice.**

Maintenance

2. Periodical check

2.1 Maintenance procedure (Periodical check parts)

NOTE

- **The alcohol described in the cleaning procedure of maintenance represents the isopropyl alcohol.**

2.1.1 Pick-up roller/feed roller

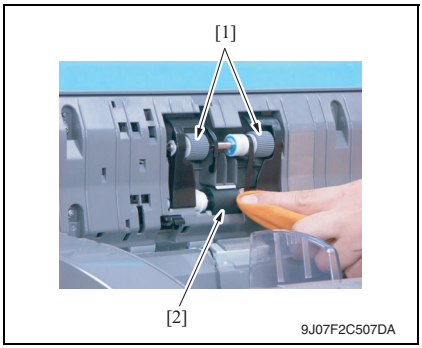

A. Cleaning procedure

1. Open the feed cover.
See P.15

2. Wet a cloth with alcohol, and use it to wipe up the pick-up roller [1] and feed roller [2].

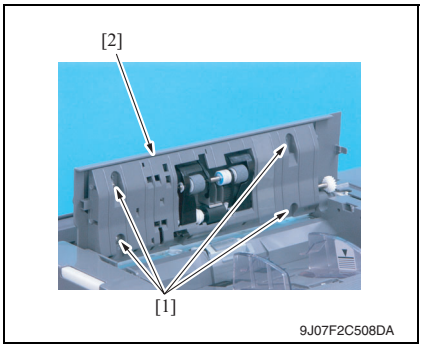

B. Replacing procedure

1. Open the feed cover.
See P.15

2. Remove four screws [1] and remove the cover [2].

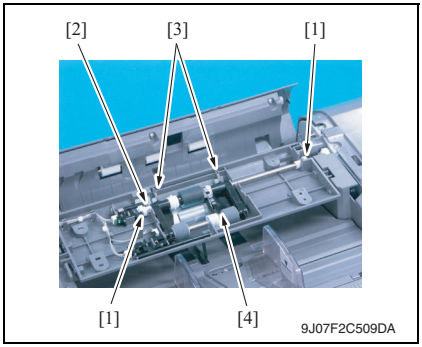

3. Remove two C-clips [1], the bearing [2] and two springs [3] and remove the pick-up/feed roller assy [4].

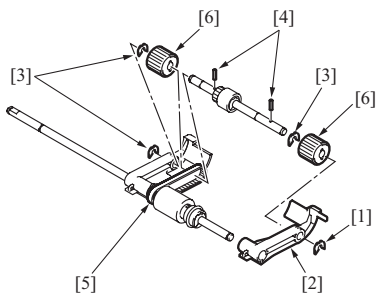

9J07F2C001DA

4. Remove the C-ring [1] and the lever [2].
5. Remove three C-rings [3].
6. Remove two pins [4].
7. Remove the belt [5].
8. Remove two pick-up rollers [6].

NOTE

- **Be careful not to lose the pin.**

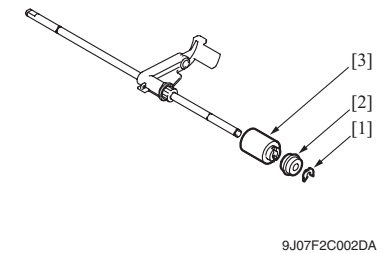

9J07F2C002DA

9. Remove the C-ring [1] and the bushing [2].
10. Remove the feed roller [3].

2.1.2 Separation roller

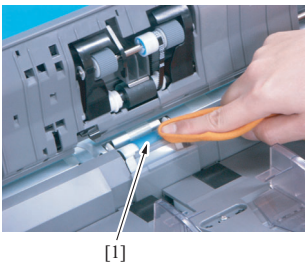

9J07F2C510DA

A. Cleaning procedure

1. Open the feed cover.

See P.15

2. Wet a cloth with alcohol, and use it to wipe up the separation roller [1].

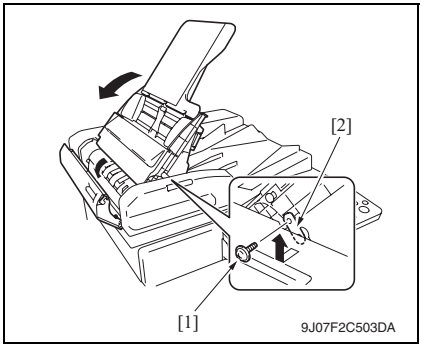

B. Replacing procedure

1. Open the transportation cover.

2. Lift up the document feed tray.

3. Remove the screw [1] and the mounting plate [2].

NOTE

- **Be sure to hold the document feed tray to prevent the tray from falling down while removing the mounting plate.**

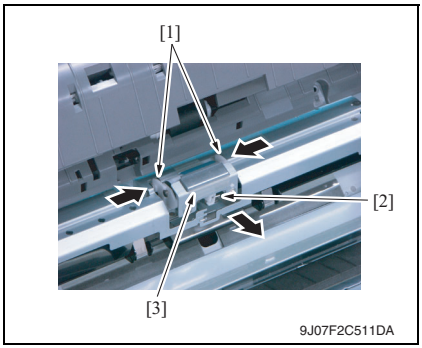

4. Hold the two sides [1] between your fingertips to unhook the spring [2] and remove the separation roller assy [3].

NOTE

- **When reinstalling the separation roller assy, be sure to hook the spring onto the assy.**

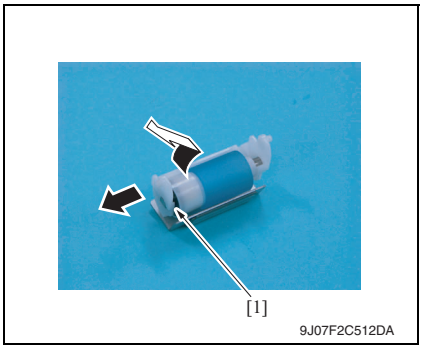

5. While opening up the holder [1], remove the shaft.

NOTE

- **Opening the holder too much can break the holder.**

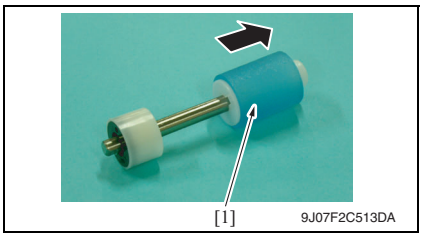

6. Remove the separation roller [1] from the shaft.

2.1.3 Miscellaneous rolls

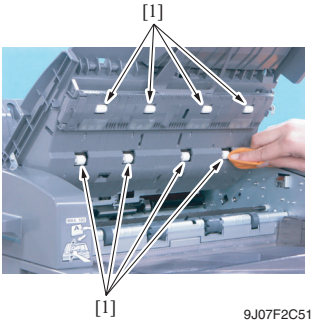

9J07F2C514DA

A. Cleaning procedure

1. Lift up the document feed tray.
2. Using a soft cloth dampened with alcohol, wipe the roll [1].

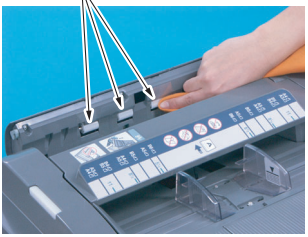

9J07F2C519DA

3. Open the transportation cover.
4. Using a soft cloth dampened with alcohol, wipe the roll [1].

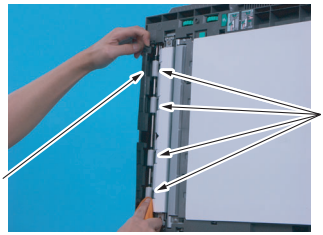

9J07F2C520DA

5. Open the reverse automatic document feeder.
6. While opening the before scanning mylar assy [1], wipe the roll [2] using a soft cloth dampened with alcohol.

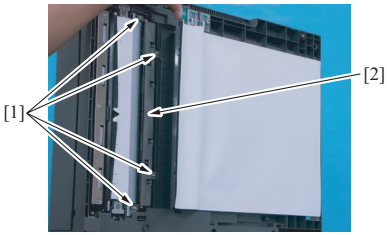

9J07F2C521DA

7. While opening the processing guide, remove four screws [1] and remove the transport roll assy [2].

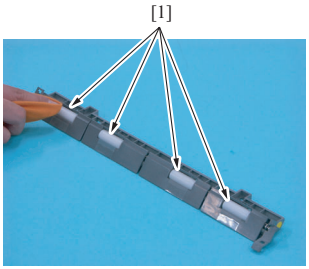

9J07F2C522DA

8. Using a soft cloth dampened with alcohol, wipe the roll [1].

2.1.4 Miscellaneous rollers

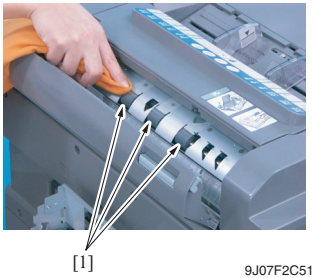

9J07F2C517DA

A. Cleaning procedure

1. Open the transportation cover.
2. Using a soft cloth dampened with alcohol, wipe the roller [1].

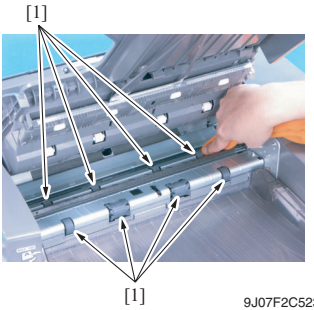

9J07F2C523DA

3. Lift up the document feed tray.
4. Using a soft cloth dampened with alcohol, wipe the roller [1].

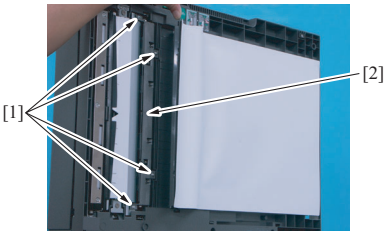

9J07F2C521DA

5. While opening the processing guide, remove four screws [1] and remove the transport roll assy [2].

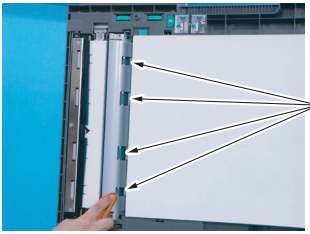

9J07F2C524DA

6. Using a soft cloth dampened with alcohol, wipe the roller [1].

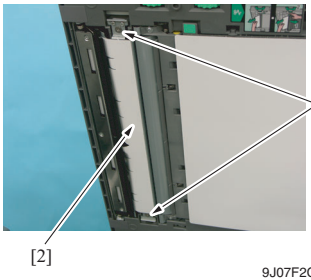

9J07F2C535DA

7. Remove two shoulder screws [1] and remove the scanning guide [2].

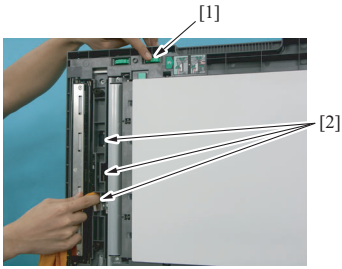

9J07F2C537DA

8. While turning processing knob [1], wipe the roller [2] using a soft cloth dampened with alcohol.

2.1.5 Cleaning of the scanning guide

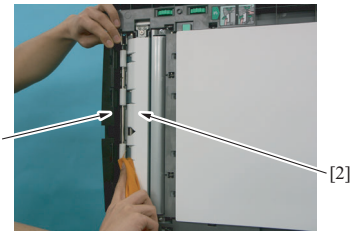

9J07F2C525DA

1. Open the reverse automatic document feeder.
2. Open the before scanning mylar assy [1].
3. Using a soft cloth dampened with alcohol, wipe the scanning guide [2] clean of dirt.

NOTE

- **Be careful not to damage the mylar.**

2.1.6 Cleaning of the reflective sensor section

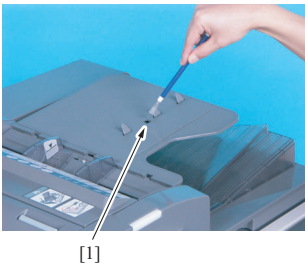

9J07F2C526DA

A. Cleaning procedure

1. Clean the sensor [1] using a brush or other similar tools.

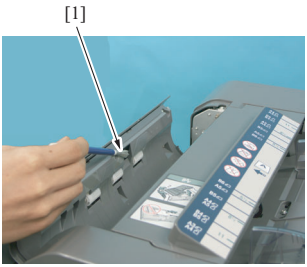

9J07F2C538DA

2. Open the transportation cover.
3. Clean the cloth [1] using a brush or other similar tools.

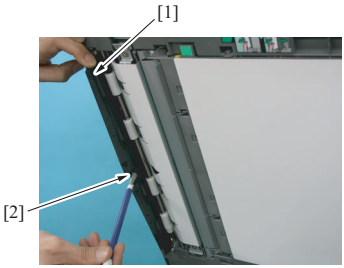

9J07F2C539DA

4. Open the reverse automatic document feeder.
5. While opening the before scanning mylar assy [1], clean the cloth [2] using a brush or other similar tools.

3. Service tool

3.1 CE tool list

Tool name	Shape	Personnel	Parts No.	Remarks
ADF reading chart	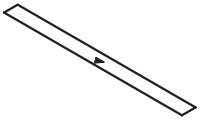 9J07F2C003DA	1	9J06 PJG1 XX	

4. Other

4.1 Disassembly/Adjustment prohibited items

A. Screws to which blue paint or green paint is applied

- **Blue paint or green paint is applied to some screws to prevent them from coming loose.**
- **As a general rule, screws to which blue paint or green paint is applied should not be removed or loosened.**

B. Red-painted screws

- **Do not remove or loosen any of the red-painted screws in the field. It should also be noted that, when two or more screws are used for a single part, only one representative screw may be marked with the red paint.**

C. Variable resistors on board

NOTE

- **Do not turn the variable resistors on boards for which no adjusting instructions are given in Adjustment/Setting.**

D. Removal of PWBs

⚠ **CAUTION**

- **When removing a circuit board or other electrical component, refer to "SAFETY AND IMPORTANT WARNING ITEMS" and follow the corresponding removal procedures.**
- **The removal procedures given in the following omit the removal of connectors and screws securing the circuit board support or circuit board.**
- **When it is absolutely necessary to touch the ICs and other electrical components on the board, be sure to ground your body.**

4.2 Disassembly/Assembly/Cleaning list (Other parts)

4.2.1 Disassembly/Assembly parts list

No.	Section	Part name	Ref. page
1	Exterior parts	Feed cover	P.15
2		Front cover	P.16
3		Rear cover	P.16
4		Document feed tray front cover	P.18
5	Unit	Reverse automatic document feeder	P.18
6	Board and etc.	DF control board	P.19
7		Document width detection variable resistor	P.20
8	Others	Stamp unit	P.22
9		Stamp	P.23

4.3 Disassembly/Assembly procedure

4.3.1 Feed cover

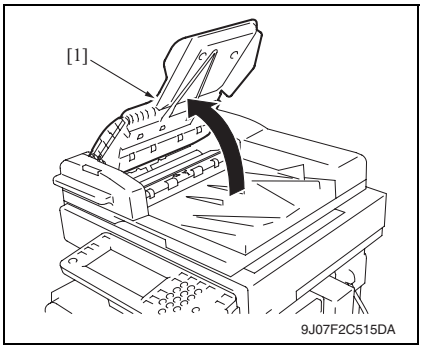

1. Lift up the document feed tray [1].

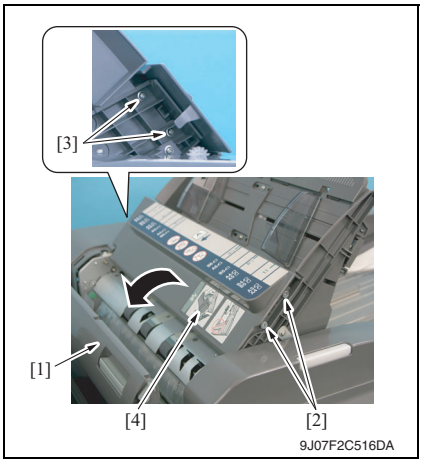

2. Open the transportation cover [1].
3. Remove two shoulder screws [2] and two screws [3].
4. Open the feed cover [4].

4.3.2 Front cover

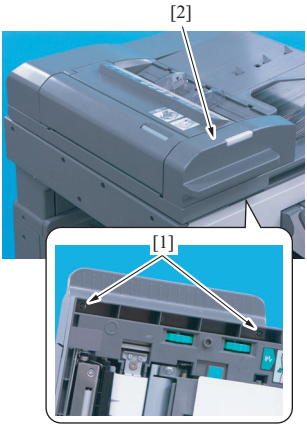

9J07F2C004DA

1. Open the reverse automatic document feeder.
2. Remove two screws [1] and remove the front cover [2].

4.3.3 Rear cover

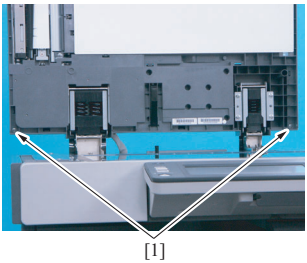

9J07F2C005DA

1. Open the reverse automatic document feeder.

NOTE

- **If the reverse automatic document feeder is set to be lifted up at angles up to 60 degrees due to the set position of the stopper for the hinge, change the set position to the lower side so that the reverse automatic document feeder can be opened completely.**

2. Remove two screws [1].

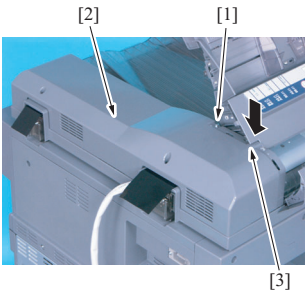

9J07F2C006DA

3. Open the transportation cover.
4. Lift up the document feed tray.
5. Remove the screw [1] and remove the rear cover [2].

NOTE

- **Be sure to press down part [3] in the picture to prevent any damage when removing the rear cover.**

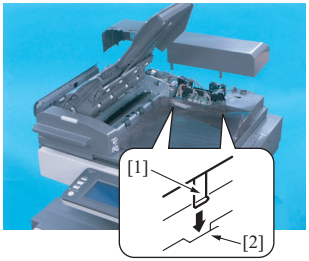

9J07F2C007DA

A. Reinstallation procedure

1. Open the transportation cover.
2. Lift up the document feed tray.
3. Position the rear cover so that its two hooks [1] fit into the holes of the base [2].

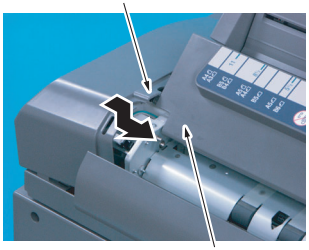

9J07F2C008DA

4. Press down part [1] in the picture until it slides under the feed cover [2].

NOTE

- **Be careful not to damage the rear cover.**

5. Install the rear cover tightening three screws.

4.3.4 Document feed tray front cover

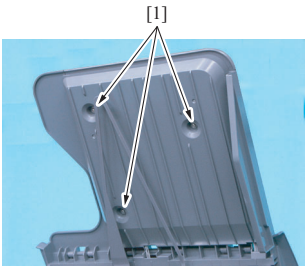

9J07F2C527DA

1. Lift up the document feed tray.
2. Remove three screws [1].

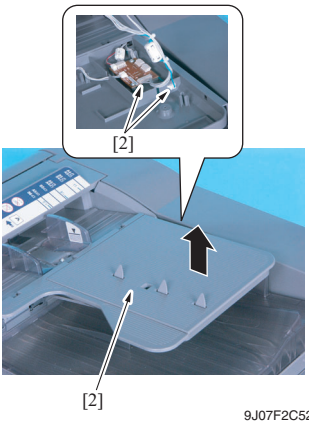

9J07F2C528DA

3. Disconnect two connectors [2] and remove the document feed tray front cover [1].

4.3.5 Reverse automatic document feeder

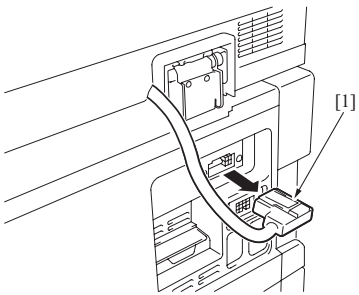

9J07F2C500DA

1. Disconnect the connector [1] of the reverse automatic document feeder from the main unit.

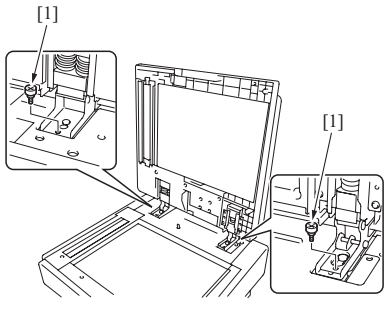

9J07F2C501DA

2. Open the reverse automatic document feeder.

NOTE

- **If the reverse automatic document feeder is set to be lifted up at angles up to 60 degrees due to the set position of the stopper for the hinge, change the set position to the lower side so that the reverse automatic document feeder can be opened completely.**

3. Remove two screws [1].

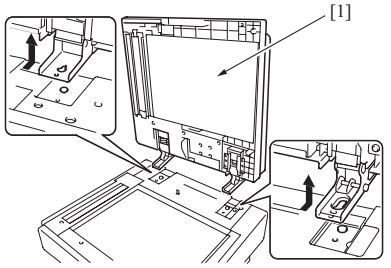

9J07F2C502DA

4. Remove the reverse automatic document feeder [1].

4.3.6 DF control board

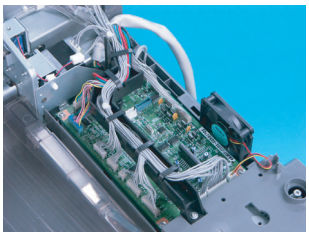
9J07F2C529DA

1. Remove the rear cover.

See P.16

2. Disconnect all the fifteen connectors from the DF control board.

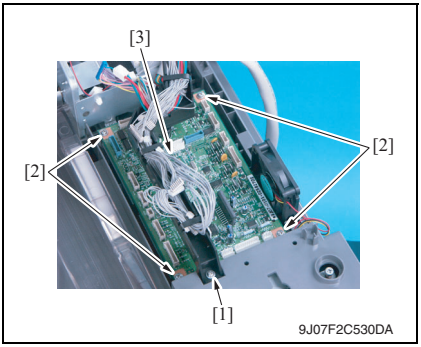

3. Remove the screw [1].
4. Remove four screws [2] and remove the DF control board [3].

NOTE

- **Be sure to perform the following operation when the DF control board is replaced.**

5. Replace the EEP-ROM.
6. Upgrade the firmware.

See P.43 of the main unit service manual.

4.3.7 Document width detection variable resistor

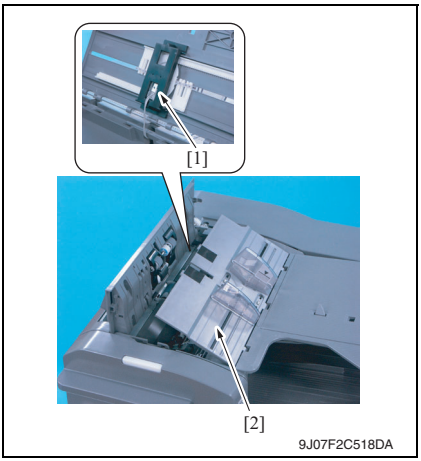

1. Open the feed cover.

See P.15

2. Disconnect the connector [1] and remove the document width detection variable resistor cover [2].

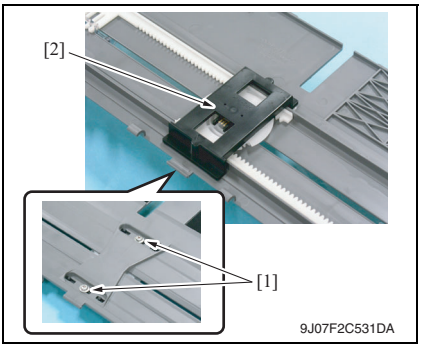

3. Remove two screws [1] and remove the document width detection variable resistor [2].

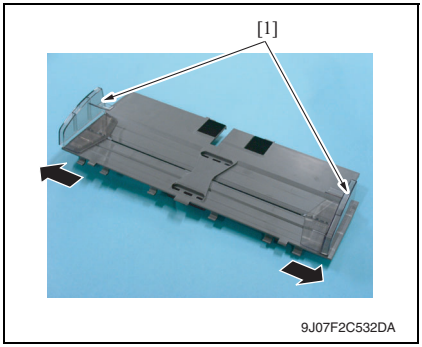

A. Reinstallation procedure

1. Open the side edge stop [1] of the original feed tray.

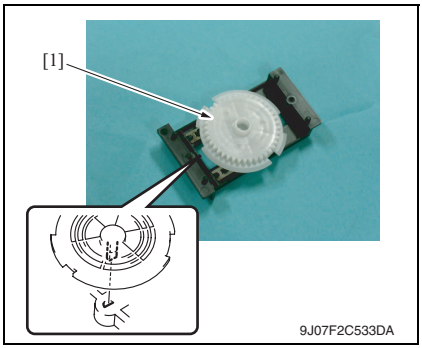

2. Reinstall the gear [1].

NOTE

- **Note the mounting position of the gear and the document width detection variable resistor.**

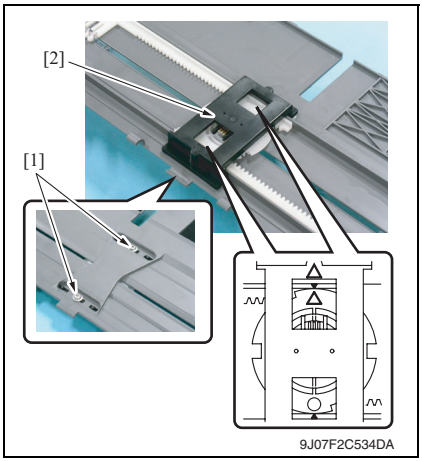

3. Use two screws [1] to install the document width detection variable resistor [2].

NOTE

- **Install the gear and rack gear by aligning the arrows.**

4. Connect the connector.

5. Install the document width detection variable resistor cover and turn on the main power switch.

NOTE

- **Be sure to perform the following operation when the document width detection variable resistor is replaced.**

6. Perform document width detection adjustment.

See P.30

7. Turn OFF the main power switch and turn it ON again and check whether size detection operates normally.

4.3.8 Replacing the stamp unit

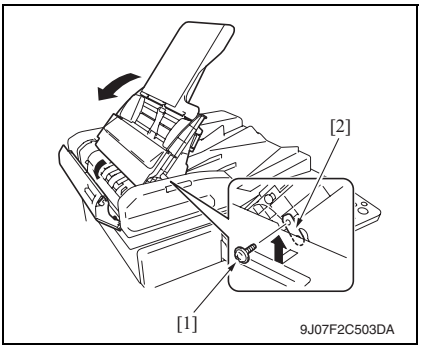

1. Open the transportation cover.
2. Lift up the document feed tray.
3. Remove the screw [1] and the mounting plate [2].

NOTE

- **Be sure to hold the document feed tray to prevent the tray from falling down while removing the mounting plate.**

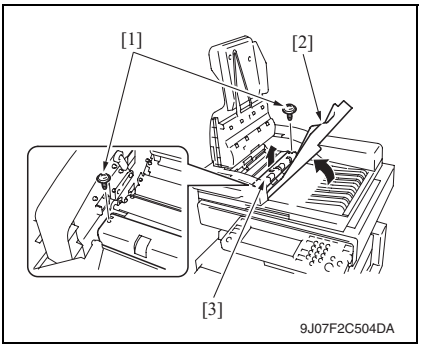

4. Remove two screws [1] and remove the plate cover [3] while holding up the exit tray [2].

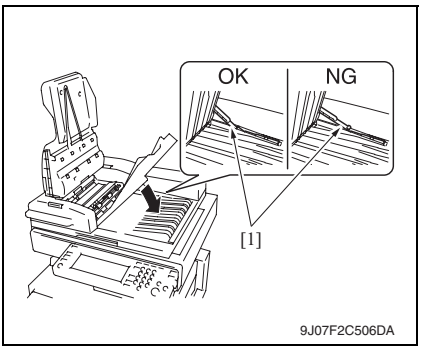

NOTE

- **When lowering the exit tray, check that the stopper [1] fits under the plate spring.**

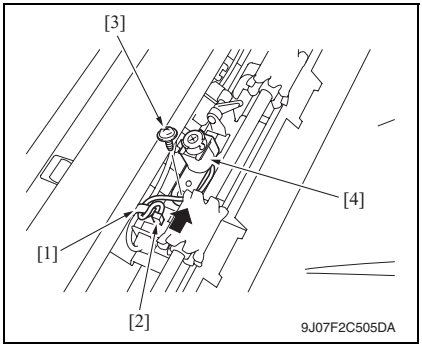

5. Remove the cord clamp [1] and disconnect the connector [2].
6. Remove the screw [3] and remove the stamp unit [4].

4.3.9 Replacing the stamp

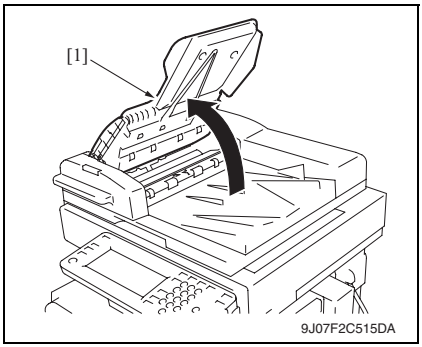

1. Lift up the document feed tray [1].

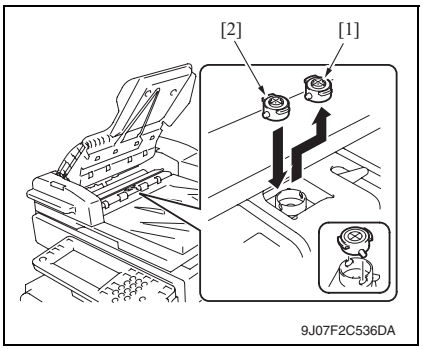

2. Remove the used stamp [1] and install the new stamp of replacement [2].

NOTE

- **Align the round pin of the stamp with the slit in the stamp unit side.**

Blank Page

Adjustment/Setting

5. How to use the adjustment section

- “Adjustment/Setting” contains detailed information on the adjustment items and procedures for this machine.
- Throughout this “Adjustment/Setting,” the default settings are indicated by “ ”.

Advance checks

Before attempting to solve the customer problem, the following advance checks must be made. Check to see if:

- The power supply voltage meets the specifications.
- The power supply is properly grounded.
- The machine shares the power supply with any other machine that draws large current intermittently (e.g., elevator and air conditioner that generate electric noise).
- The installation site is environmentally appropriate: high temperature, high humidity, direct sunlight, ventilation, etc.; levelness of the installation site.
- The original has a problem that may cause a defective image.
- The density is properly selected.
- The original glass, slit glass, or related part is dirty.
- Correct paper is being used for printing.
- The units, parts, and supplies used for printing (developer, PC drum, etc.) are properly replenished and replaced when they reach the end of their useful service life.
- Toner is not running out.

⚠ CAUTION

- **Be sure to unplug the power cord of the machine before starting the service job procedures.**
- **If it is unavoidably necessary to service the machine with its power turned ON, use utmost care not to be caught in the scanner cables or gears of the exposure unit.**
- **Special care should be used when handling the fusing unit which can be extremely hot.**
- **The developing unit has a strong magnetic field. Keep watches and measuring instruments away from it.**
- **Take care not to damage the PC drum with a tool or similar device.**
- **Do not touch IC pins with bare hands.**

6. Service Mode

6.1 Service Mode setting procedure

See P.304 of the main unit service manual.

6.2 ADF setting procedure

6.2.1 Original Stop Position

Functions	• To manually adjust the original stop position and the read position in each of the ADF modes.
Use	• When the result is Unable in the automatic adjustment of the original stop position.
Setting/ procedure	P.37

6.2.2 Registration Loop Adj.

Functions	• To adjust the length of the loop to be formed in paper before the registration rollers.
Use	• When an original misfeed or skew occurs.
Adjustment instructions	• The loop value increases by the entered + value and decreases by the entered - value.
Adjustment range	• The default setting is 0. • Adjustable range: -5 mm to + 5 mm (in 1-mm increments)
Setting/ procedure	*1.* Call the Service Mode to the screen. *2.* Touch [ADF]. *3.* Touch [Registration Loop Adj]. *4.* Select either [1-Side] or [Second Side] for the adjustment. *5.* Press the clear key and change the setting value using the 10-key pad. (Press the [+/-] key to change the +/- code.) *6.* Touch [END]. *7.* Touch [Exit] on the Service Mode screen. *8.* Turn OFF the main power switch, wait for 10 sec., then turn the switch ON.

6.2.3 Auto Stop Position Adjustment

A. Sub Scanning Direction 1-Side

Functions	• To automatically adjust the read position for the Sub Scanning Direction 1-Side. • To check skew feed.
Use	• When ADF has been replaced.
Setting/ procedure	P.34

B. Sub Scanning Direction 2-Side

Functions	• To automatically adjust the read position for the Sub Scanning Direction 2-Side.
Use	• When ADF has been replaced.
Setting/ procedure	P.35

C. Main Scanning Direction

Functions	• To automatically adjust the read position in the Main Scanning Direction.
Use	• When ADF has been replaced.
Setting/ procedure	P.36

6.2.4 Paper Passage

Functions	• To check for paper passage through the ADF in each of the ADF modes.
Use	• Used for checking the document path for any abnormal condition when a document misfeed occurs.
Setting/ procedure	<Procedure> *1.* Call the Service Mode to the screen. *2.* Touch [ADF]. *3.* Touch [Paper Passage]. *4.* Select a paper passage mode to be tested from [1-Sided No Detect], [1-Sided Mixed Org.], [2-Sided], or [AMS Mixed Org.]. *5.* Set the original in the feed tray. *6.* The Start key color changes from orange to green. *7.* Press the Start key. The operation starts. **NOTE** • **After starting the operation by pressing the Start key, if the Start key is pressed during the operation, the operation will be suspended. Then, if the Start key is pressed again during the suspension, the operation will be resumed.** • **If the Stop key is pressed during the test operation, the test will be forced to end.** • **If there is no Original set in the feed Tray, the Start key will not work.** • **All Originals set in the feed Tray are passed through. Upon the completion of all Originals passed through, the Paper Through Test ends.**

6.2.5 Sensor Check

Functions	• To check sensors on the paper path.
Use	• When a document misfeed occurs.

A. Check procedure

- To allow sensors to be checked for operation easily and safely, data applied to the IC on the board can be checked on the panel with the main unit in the standby state (including a misfeed, malfunction, and closure failure condition).

B. Procedure

1. Call the Service Mode to the screen.

See P.304 of the main unit service manual.

2. Touch [ADF].

3. Touch [Sensor Check].

4. Operate the sensor to check by using paper or the like, and check the screen display. (Paper detected: 1, No paper detected: 0)

C. Sensor check screen

- This is only typical screen which may be different from what are shown on each individual main unit.

ADF Adjustment END

Sensor Check

Feed Open&Close	0	Reverse Regist	0	Empty	0
Read Open&Close	0	Before Read	0	Lift Up Lower	0
Registration	0	Restriction Board Position	0	Lift Up Upper	0
After Separate	0	Length Sensor1	0	Mixed Sensor1	0
Eject	0	Length Sensor2	0	Mixed Sensor2	0
Read Roller	0	Length Sensor3	0	Mixed Sensor3	0
Reverse Roller	0	Length Sensor4	0		
DF Open	0	Glass Home Pos.	0		

9J07F3E533DA

D. Sensor check list

Symbol	Panel display	Part/Signal name	Operation characteristics/ panel display	
			1	0
PC1	Feed Open&Close	Feed open&close sensor	Close	Open
PC2	Read Open&Close	Read open&close sensor	Close	Open
PC3	Registration	Registration sensor	Paper present (Blocked)	Paper not present (Unblocked)
PC4	After Separate	After separate sensor	Paper present (Unblocked)	Paper not present (Blocked)
PC5	Eject	Eject sensor	Paper present (Unblocked)	Paper not present (Blocked)
PC6	Read Roller	Read roller sensor	Retraction (Unblocked)	Pressure (Blocked)
PC7	Reverse Roller	Reverse roller sensor	Pressure (Unblocked)	Retraction (Blocked)
S201	DF Open	Original cover/DF open sensor	Open	Close
PC8	Reverse Regist	Reverse regist sensor	Paper present (Blocked)	Paper not present (Unblocked)
PC9	Before Read	Before read sensor	Paper present (Blocked)	Paper not present (Unblocked)
R1	Restriction Board Position	Document width detection variable resistor	Analog value	
PC10	Length Sensor1	Length sensor1	Paper present	Paper not present
PC11	Length Sensor2	Length sensor2	Blocked	Unblocked
PC12	Length Sensor3	Length sensor3	Paper present	Paper not present
PC13	Length Sensor4	Length sensor4	Paper present	Paper not present
PC205	Glass Home Pos.	Glass home pos. sensor	At home	Out of home
PC14	Empty	Empty sensor	Paper present	Paper not present
PC16	Lift Up Lower	Lift up lower sensor	Unblocked	Blocked
PC15	Lift Up Upper	Lift up upper sensor	Blocked	Unblocked
PC19	Mixed Sensor1	Mixed sensor1	Paper present	Paper not present
PC18	Mixed Sensor2	Mixed sensor2	Paper present	Paper not present
PC17	Mixed Sensor3	Mixed sensor3	Paper present	Paper not present

6.2.6 Original Tray Width

Functions	• To set the values of maximum (A3 position) and minimum (B6 position) widths on the document width detection variable resistor.
Use	• When an original misfeed occurs. • When an original size detection error occurs.
Setting/ procedure	P.40

6.2.7 Read Pos Adj

Functions	• To adjust the original read position.
Use	• When the first/second carriage, the scanner wire, the scanner assy, the original glass moving unit, and/or the glass step sheet have been replaced.
Setting/ procedure	P.43

6.2.8 Feed Zoom

Functions	• To adjust the feed zoom of ADF in the feeding direction.
Use	• When ADF has been replaced.
Setting/ procedure	P.45

6.2.9 Scanning Light Adjustment

Functions	• To adjust the scanning light of ADF.
Use	• When the original glass moving unit has been replaced. • Used for adjusting the difference in the scanning lights between scanning from the original glass and scanning from the ADF original glass.
Setting/ procedure	• Adjustable range: -2 to + 2 (1 step) *1.* Call the Service Mode to the screen. *2.* Touch [ADF]. *3.* Touch [Scanning Light Adjustment]. *4.* Select a color by pressing [Red], [Green], or [Blue]. *5.* Press the clear key and enter the value using the [+]/[-] key. **NOTE** • **It is recommended that the scanning light adjustment should be made by the same steps for all the three colors of red, green, and blue.** *6.* Touch [END]. *7.* Touch [Exit] on the Service Mode screen. *8.* Turn OFF the main power switch, wait for 10 sec., then turn the switch ON.

7. Mechanical adjustment

7.1 Adjusting the height

NOTE

Make this adjustment after any of the following procedures has been performed.

- **When the automatic document feeder has been reinstalled.**

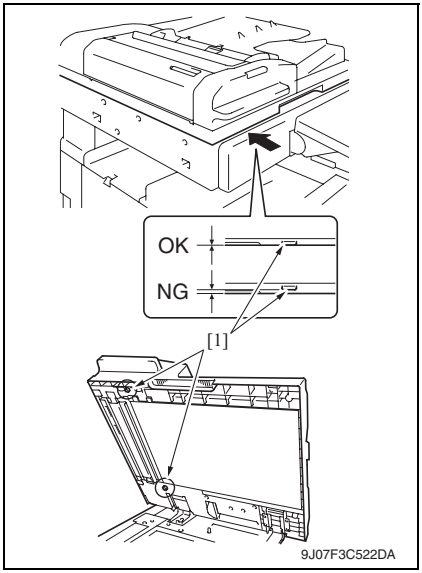

1. Check the clearance between the upper face of scanner and the protrusion [1] on the reverse automatic document feeder side (2 spots, front/back).

NOTE

- **There must be no clearance between the protrusion [1] on the reverse automatic document feeder and the upper face of scanner.**

2. If there is any clearance, the following adjustment is needed.

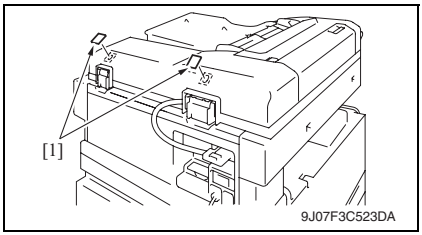

3. Remove the label [1].

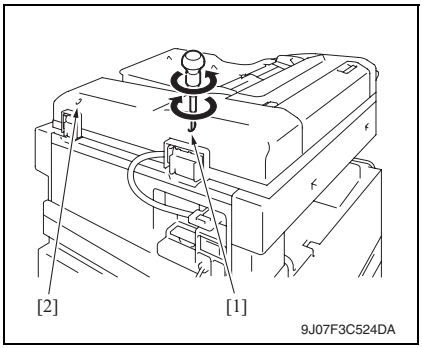

4. Remove the clearance by turning the adjusting screw [1].
   Clockwise rotation:
   Lifting up the rear side
   Counterclockwise rotation:
   Lowering the rear side
5. Use the adjusting screw [2] when further adjustment is needed.
   Clockwise rotation:
   Lifting up the rear side
   Counterclockwise rotation:
   Lowering the rear side
6. Affix again the labels removed in step 3.

7.2 Adjusting skew feed

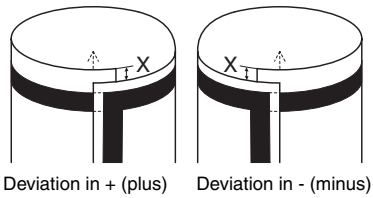

9J07F3C513DA

1. Check how the edges of the chart are misaligned.
   The amount of the deviation of the chart will be X.

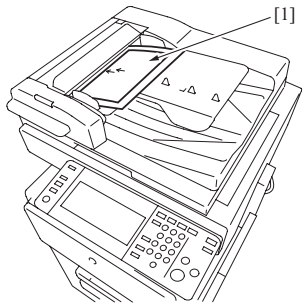

9J07F3J506DA

2. Place the chart [1] in the document feed tray (with the side having an arrow facing up).

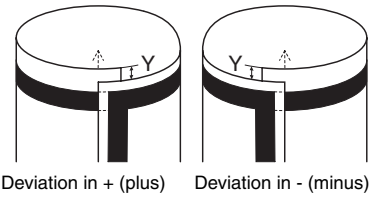

9J07F3C514DA

3. Make copies 5 times repeatedly in single side mode.
4. Fold all 5 sample copies as illustrated and check for any deviation.
   Deviation on the sample will be Y.
5. Obtain the difference between the deviation of the chart and the deviation of the sample.
   Difference of the deviation = Y - X
   Specifications: 0 ± 2 mm
6. If the difference of the deviation does not fall within the specified range, perform the following adjustment.

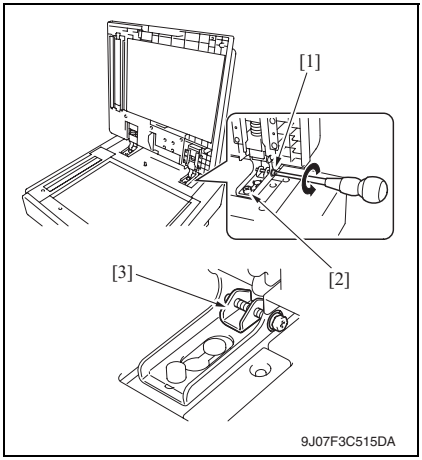

7. Loosen the mounting screw [1] on the right hinge viewed from the front.
8. When the difference of the deviation is + (plus), turn the screw [2] counterclockwise to adjust.

NOTE

- **When the adjusting plate [3] is set far left, do not tighten any further.**

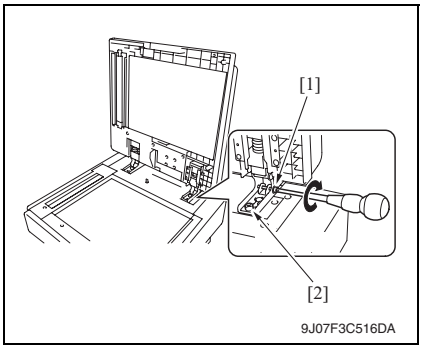

9. When the difference of the deviation is - (minus), turn the screw [1] clockwise to adjust.
10. After the adjustment is completed, tighten the mounting screw [2] on right side hinge securely with screwdriver.

7.3 Original Stop Position

- Adjustment of the document stop position is made automatically and manually (by entering numbers). The following adjustment is made in the Service Mode.

NOTE

- **Before performing this adjustment, the feed zoom adjustment needs to be complete.**

See P.45

A. Auto adjust: Sub Scanning Direction 1-Side Stop Position

1. Call the Service Mode to the screen.

See P.304 of the main unit service manual.

2. Touch [ADF].
3. Touch [Auto Stop Position Adjustment].

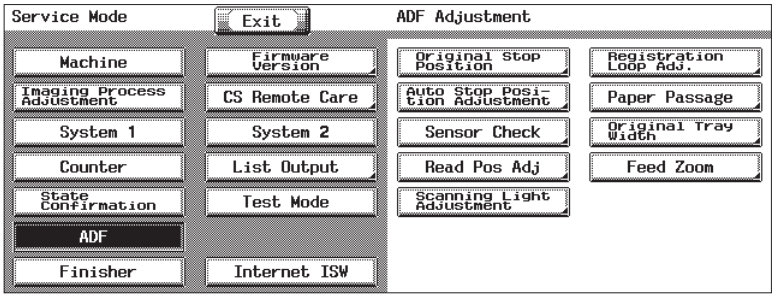

9J07F3E534DA

4. Touch [Sub Scanning Direction 1-Side].

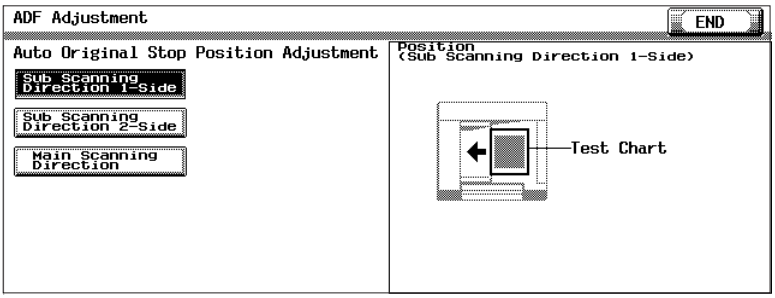

9J07F3E535DA

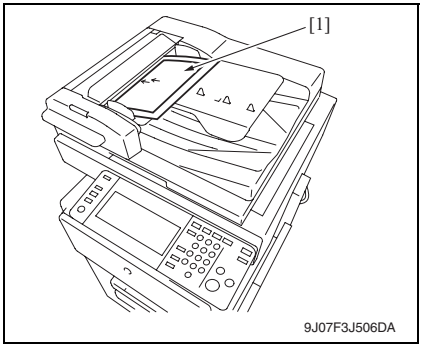

5. Place the chart [1] in the document feed tray (with the side having an arrow facing up).
6. Press the Start key.

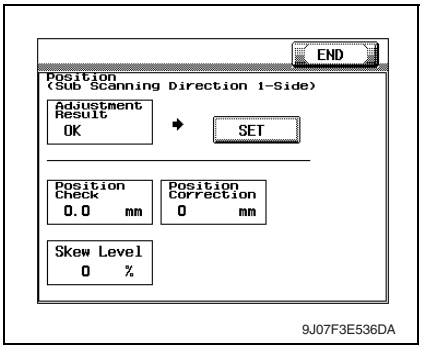

7. Make sure that result is OK. Then, touch [SET].
8. Touch [END].
9. Touch [Exit] on the Service Mode screen.
10. Turn OFF the main power switch, wait for 10 sec., then turn the switch ON.

NOTE

If the result is Unable:

- **Check and correct the skew of the document.**
- **Manually correct the value of [Original Stop Position].**

See P.37

B. Auto adjust: Sub Scanning Direction 2-Side Stop Position

1. Call the Service Mode to the screen.

See P.304 of the main unit service manual.

2. Touch [ADF].
3. Touch [Auto Stop Position Adjustment].
4. Touch [Sub Scanning Direction 2-Side].

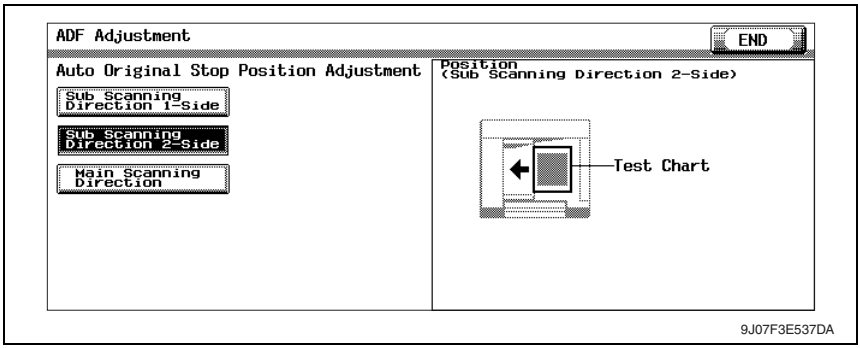

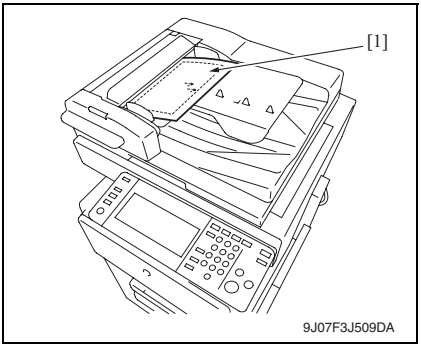

5. Place the chart furnished with the ADF [1] in the document feed tray.

NOTE

- **Make sure that the blank surface of the chart faces up.**

6. Press the Start key.

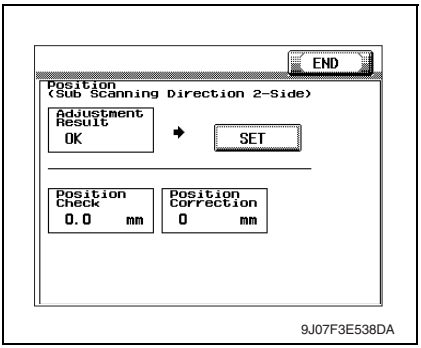

7. Make sure that result is OK. Then, touch [SET].
8. Touch [END].
9. Touch [Exit] on the Service Mode screen.
10. Turn OFF the main power switch, wait for 10 sec., then turn the switch ON.

NOTE

If the result is Unable:

- **Check and correct the skew of the document.**
- **Manually correct the value of [Original Stop Position].**

See P.37

C. Auto adjust: Main Scanning Direction Image scan start position

1. Call the Service Mode to the screen.

See P.304 of the main unit service manual.

2. Touch [ADF].
3. Touch [Auto Stop Position Adjustment].
4. Touch [Main Scanning Direction].

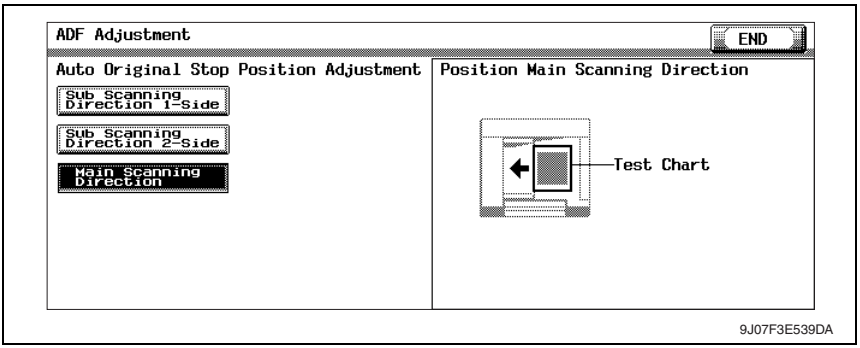

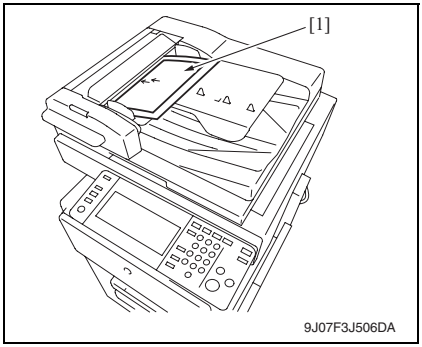

5. Place the chart [1] in the document feed tray (with the side having an arrow facing up).
6. Press the Start key.

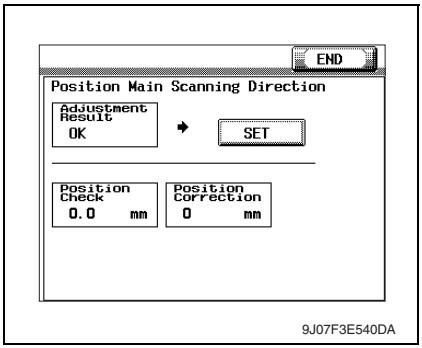

7. Make sure that result is OK. Then, touch [SET].
8. Touch [END].
9. Touch [Exit] on the Service Mode screen.
10. Turn OFF the main power switch, wait for 10 sec., then turn the switch ON.

NOTE

If the result is Unable:

- **Check and correct the skew of the document.**
- **Manually correct the value of [Original Stop Position].**

See P.39

D. Manual adjust: Sub Scanning Direction 1-Sided/2-Sided document stop position adjustment

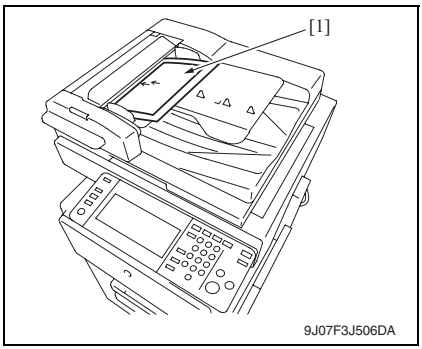

1. Place the chart [1] in the document feed tray (with the side having an arrow facing up).
2. Make a full size copy of the chart.

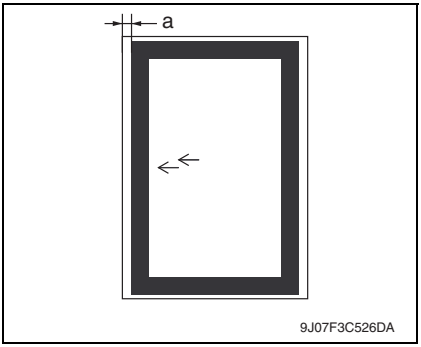

3. Check that the difference in the widths of a between the chart and the copy sample falls within the specified range.
   Specifications: 0 ± 2 mm

NOTE

- **In the same way place the chart with the blank side facing up in the document feed tray in the duplex mode and make a copy. Check the difference in the widths of a between the chart and the second sided surface of the copy sample.**

4. If the difference in the width of a falls outside the specified range, make the following adjustment.
5. Call the Service Mode to the screen.

See P.304 of the main unit service manual.

6. Touch [ADF].
7. Touch [Original Stop Position].

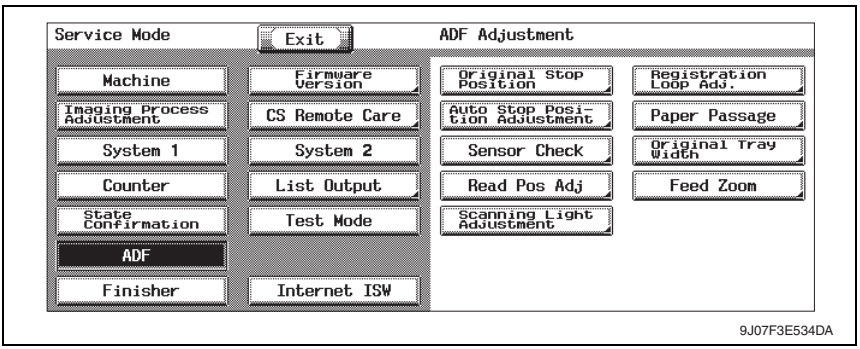

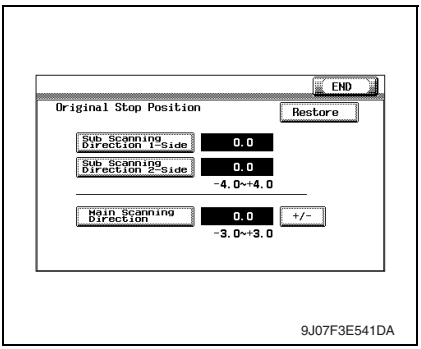

8. Touch [Sub Scanning Direction 1-Side] or [Sub Scanning Direction 2-Side].
9. Enter the value from the ten-key pad. (Press the [+/-] key to change the +/- code.)

- Adjustable range: -4.0 mm to + 4.0 mm (in 1-mm increments)
- If the difference in the widths of a is greater than the specifications, enter the + value.
- If the difference in the widths of a is smaller than the specifications, enter the - value.

10. Touch [END].
11. Touch [Exit] on the Service Mode screen.
12. Turn OFF the main power switch, wait for 10 sec., then turn the switch ON.
13. Make a copy of the chart again and check that the difference in the widths of a falls within the specified range.

E. Manual adjust: Main Scanning Direction stop position adjustment

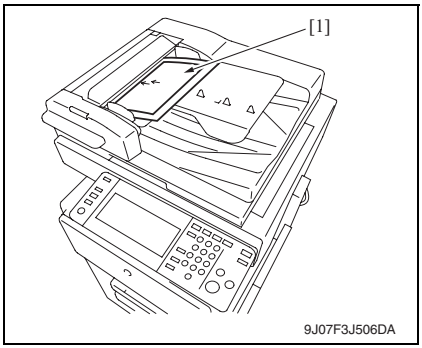

1. Place the chart [1] in the document feed tray (with the side having an arrow facing up).
2. Make a full size copy of the chart.

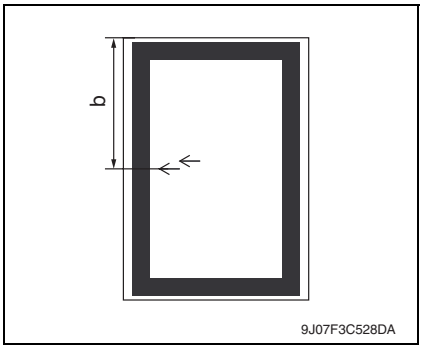

3. Check that the difference in the widths of b between the chart and the copy sample falls within the specified range.
   Specifications: 0 ± 2 mm
4. If the difference in the width of b falls outside the specified range, make the following adjustment.

5. Call the Service Mode to the screen.
See P.304 of the main unit service manual.
6. Touch [ADF].
7. Touch [Original Stop Position].

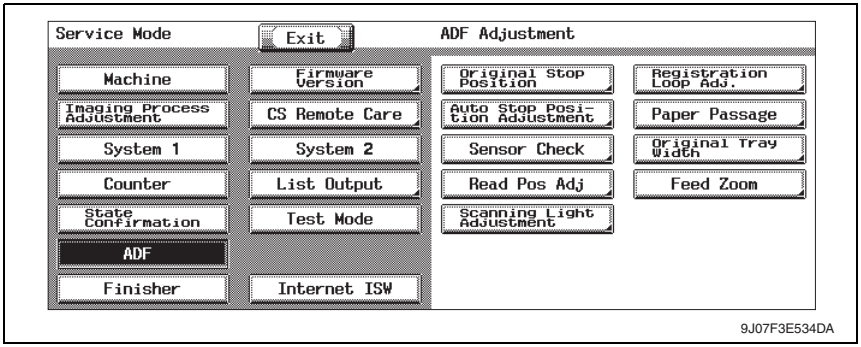

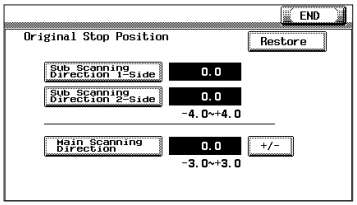

9J07F3E541DA

8. Touch [Main Scanning Direction].
9. Enter the value from the ten-key pad. (Press the [+/-] key to change the +/- code.)

- Adjustable range: -3.0 mm to + 3.0 mm (in 1-mm increments)
- If the difference in the widths of b is greater than the specifications, enter the + value.
- If the difference in the widths of b is smaller than the specifications, enter the - value.

10. Touch [END].
11. Touch [Exit] on the Service Mode screen.
12. Turn OFF the main power switch, wait for 10 sec., then turn the switch ON.
13. Make a copy of the chart again and check that the difference in the widths of b falls within the specified range.

7.4 Original Tray Width

NOTE

Make this adjustment after any of the following procedures has been performed.

- **When the document width detection variable resistor has been replaced.**
- **When the EEP-ROM has been replaced.**

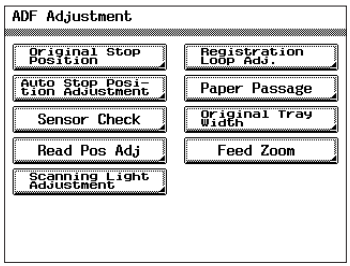

9J07F3E542DA

1. Call the Service Mode to the screen. See P.304 of the main unit service manual.
2. Touch [ADF].
3. Touch [Original Tray Width].

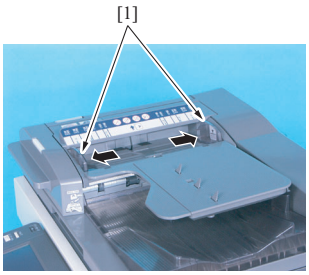

9J07F3C001DA

4. Widen the width across the edge guides [1] by sliding them to the “A3” position.

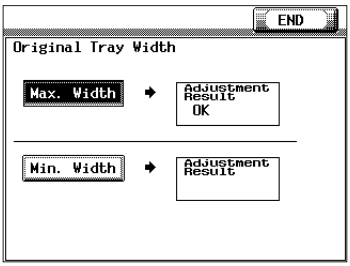

9J07F3E543DA

5. Touch [Max. Width].
6. Press the Start key.
7. OK is displayed when the adjustment has been completed.

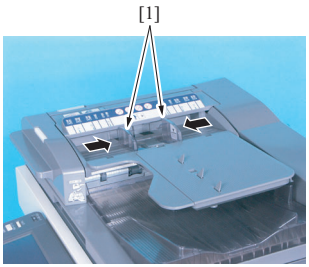

9J07F3C002DA

8. Narrow the width across the edge guides [1] by sliding them to the “B6” position.

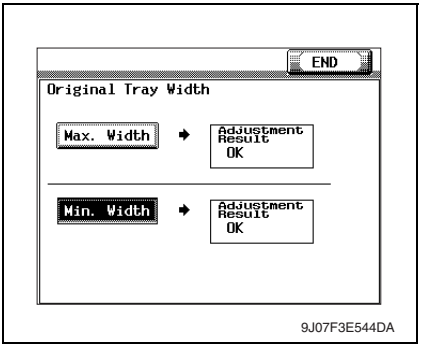

9. Touch [Min. Width].
10. Press the Start key.
11. OK is displayed when the adjustment has been completed.
12. Touch [END].

13. Touch [Exit] on the Service Mode screen.
14. Turn OFF the main power switch, wait for 10 sec., then turn the switch ON.

* If the result is NG:

- Possible causes includes failure of the document width detection variable resistor, wrong wiring to the volume and failure of the DFCB.

7.5 Read Pos Adj

NOTE

Make this adjustment after any of the following procedures has been performed.

- **When the first/second carriage, the scanner wire, the scanner assy, the original glass moving unit, and/or the glass step sheet have been replaced.**

A. Auto adjust

1. Call the Service Mode to the screen.
2. Touch [ADF].
3. Touch [Read Pos Adj].
4. Touch [Auto Adjust].

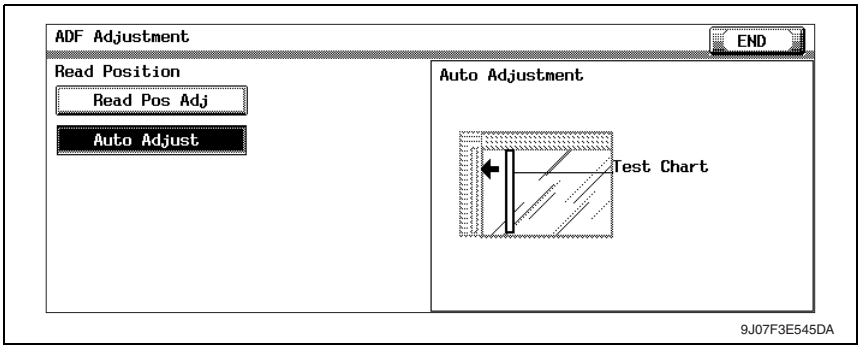

9J07F3E545DA

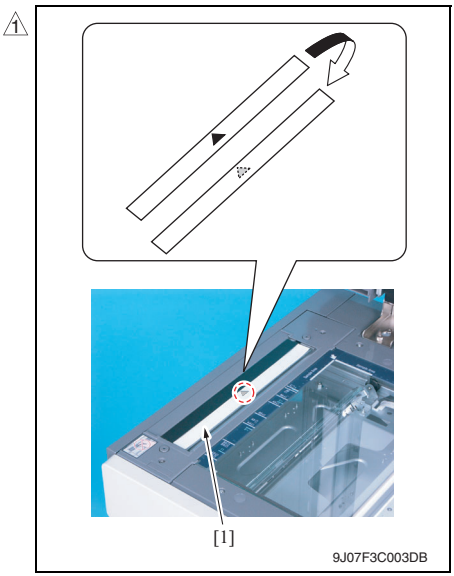

9J07F3C003DB

5. Open the ADF.
6. Place the ADF reading chart [1] so that a triangular mark may become the original glass side (downward) and the pointed tip of the triangle points toward the black sheet on the left side.
7. Press the Start key.

NOTE

- **Be sure that the ADF reading chart is in position.**
- **Keep the automatic document feeder open while making the adjustment.**

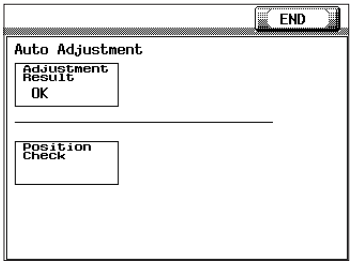

9J07F3E546DA

8. Make sure that the result is OK.
9. Touch [END].
10. Touch [Exit] on the Service Mode screen.
11. Turn OFF the main power switch, wait for 10 sec., then turn the switch ON.

NOTE

If the result is Unable:

- **Check that the chart is in the correct place.**
- **Make the manual adjustment on the [Read Pos Adj] screen.**

See P.44

B. Manual adjust: Read Pos Adj

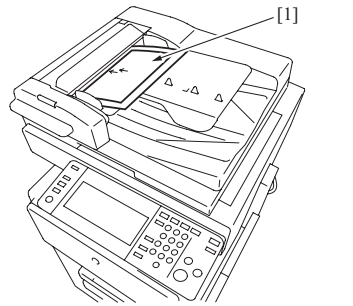

9J07F3J506DA

1. Place the chart [1] in the document feed tray (with the side having an arrow facing up).
2. Make a full size copy of the chart.

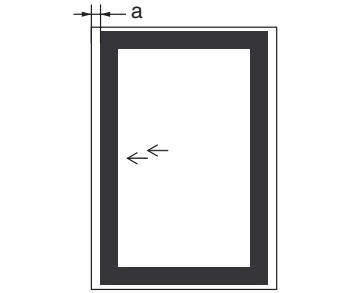

9J07F3C526DA

3. Check that the difference in the widths of a between the chart and the copy sample falls within the specified range.
   Specifications: 0 ± 1.0 mm
4. If the difference in the width of a falls outside the specified range, make the following adjustment.

5. Call the Service Mode to the screen.
6. Touch [ADF].

7. Touch [Read Pos Adj].

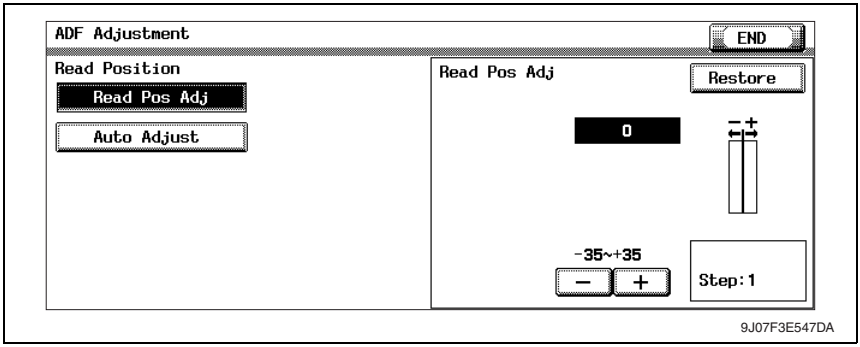

8. Enter the value using the [-]/[+] keys.
- If the difference in the widths of a is greater than the specifications, enter the - value.
- If the difference in the widths of a is smaller than the specifications, enter the + value.

9. Touch [END].
10. Touch [Exit] on the Service Mode screen.
11. Turn OFF the main power switch, wait for 10 sec., then turn the switch ON.
12. Make a copy of the chart again and check that the difference in the widths of a falls within the specified range.

7.6 Feed Zoom

- Adjustment of the feed zoom is made automatically and manually (by entering numbers). The following adjustment is made in the Service Mode.

A. Auto adjust

1. Call the Service Mode to the screen.
2. Touch [ADF].
3. Touch [Feed Zoom].
4. Touch [Auto Adjust].

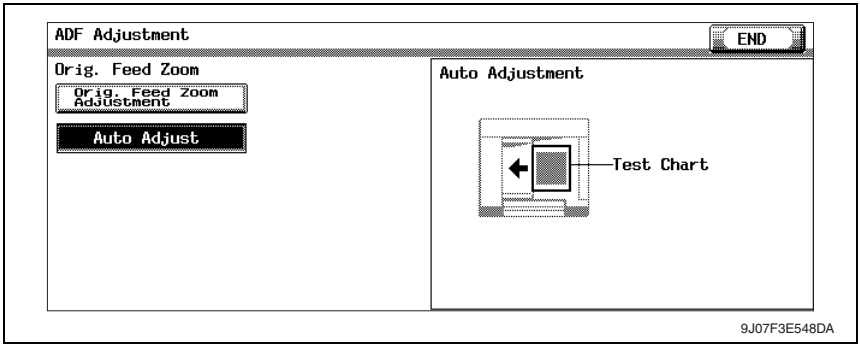

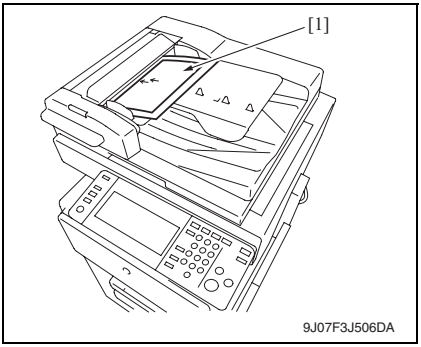

5. Place the chart [1] in the document feed tray (with the side having an arrow facing up).
6. Press the Start key.

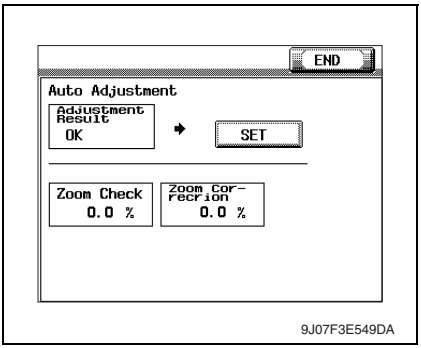

7. Make sure that result is OK. Then, touch [SET].
8. Touch [END].

9. Touch [Exit] on the Service Mode screen.
10. Turn OFF the main power switch, wait for 10 sec., then turn the switch ON.

B. Manual adjust: Orig. Feed Zoom Adjustment

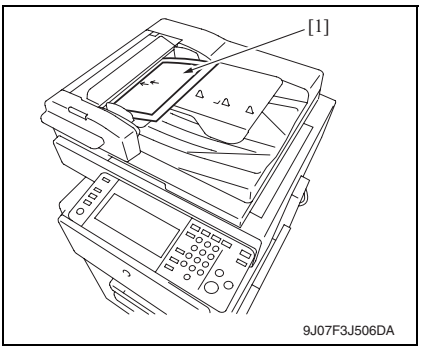

1. Place the chart [1] in the document feed tray (with the side having an arrow facing up).
2. Make a full size copy of the chart.

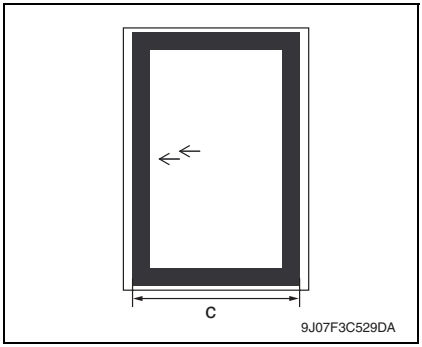

3. Check that the difference in the widths of c between the chart and the copy sample falls within the specified range.
Specifications: 0 ± 1.0 mm

4. If the difference in the width of c falls outside the specified range, make the following adjustment.

5. Call the Service Mode to the screen.

6. Touch [ADF].

7. Touch [Feed Zoom].

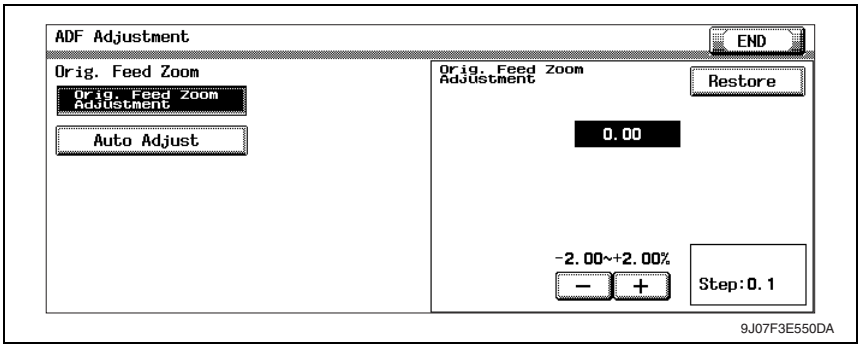

8. Enter the value using the [-]/[+] keys.

- If the difference in the widths of c is greater than the specifications, enter the - value.
- If the difference in the widths of c is smaller than the specifications, enter the + value.

9. Touch [END].

10. Touch [Exit] on the Service Mode screen.

11. Turn OFF the main power switch, wait for 10 sec., then turn the switch ON.

12. Make a copy of the chart again and check that the difference in the widths of a falls within the specified range.

Blank Page

Troubleshooting

8. Jam display

8.1 Initial check items

- When a paper misfeed occurs, first perform the following initial check items.

Check item	Action
Does paper meet product specifications?	Replace paper.
Is the paper curled, wavy, or damp?	Replace paper. Instruct the user on the correct paper storage procedures.
Is a foreign object present along the paper path, or is the paper path deformed or worn?	Clean the paper path and replace if necessary.
Are rolls/rollers dirty, deformed, or worn?	Clean or replace the defective roll/roller.
Are the edge guide and trailing edge stop at the correct position to accommodate the paper?	Set as necessary.
Are the actuators operating correctly?	Correct or replace the defective actuator.

8.2 Misfeed display

- When misfeed occurs, message, misfeed location “Blinking” and paper location “Lighting” are displayed on the touch panel of the main unit.

Code	Misfeed location	Misfeed access location	Action
6601	Turnover section	Paper exit section cover	P.51
6602	Paper feed section	Transportation cover	P.52
6603	Transport section	Transportation cover	P.53
6604	Paper exit section	Paper exit section cover	P.54
6605	Image reading section	Transportation cover	P.55

8.2.1 Misfeed display resetting procedure

- Open the corresponding door, clear the sheet of paper misfed, and close the door.

8.3 Sensor layout

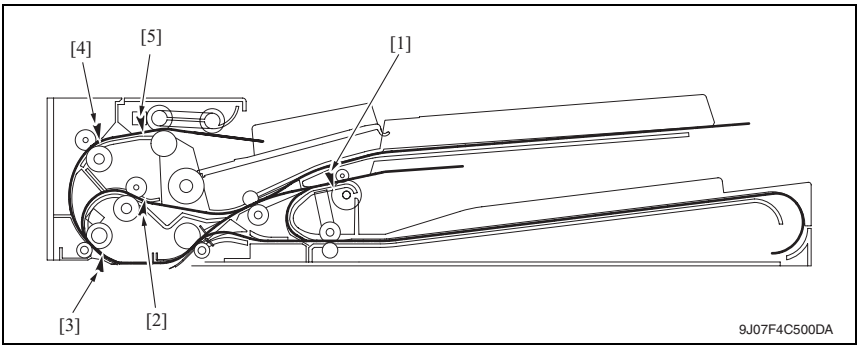

[1]	Eject sensor	PC5	[4]	Registration sensor	PC3
[2]	Reverse regist sensor	PC8	[5]	After separate sensor	PC4
[3]	Before read sensor	PC9			

8.4 Solution

8.4.1 Turnover section misfeed

A. Detection timing

Type	Description
Detection of misfeed at turnover section	The before read sensor (PC9) is not turned ON after a lapse of a given time after the reverse regist motion is performed.
	The reverse regist sensor (PC8) is not turned ON after a lapse of a given time after the before read sensor (PC9) is turned ON.
Detection of paper left in turnover section	The before read sensor (PC9) is not turned OFF after a lapse of a given time after the reverse regist motion is performed.

B. Action

Relevant electrical parts	
Switchback roller pressure/retraction motor (M5) Before read sensor (PC9) Reverse regist sensor (PC8)	DF control board (DFCB)

Step	Action	WIRING DIAGRAM	
		Control signal	Location (Electrical components)
1	Initial check items	—	—
2	PC9 I/O, sensor check	DFCB PJ14DFCB-8 (ON)	DF-608 C-6
3	PC8 I/O, sensor check	DFCB PJ12DFCB-2 (ON)	DF-608 I-4
4	M5 operation check	DSDTB PJ3DSDTB-6 to 7	DF-608 K to L-9 to 10
5	DFCB replacement	—	—

8.4.2 Paper feed section misfeed

A. Detection timing

Type	Description
Detection of misfeed at paper feed section	The after separate sensor (PC4) is not turned ON after a lapse of a given time after the take-up motor (M2) is turned ON.

B. Action

Relevant electrical parts	
Take-up motor (M2) After separate sensor (PC4)	DF control board (DFCB)

Step	Action	WIRING DIAGRAM	
		Control signal	Location (Electrical components)
1	Initial check items	—	—
2	PC4 I/O, sensor check	DFCB PJ11DFCB-6 (ON)	DF-608 C-5
3	M2 operation check	DFCB PJ8DFCB-5 to 10	DF-608 I-6
4	DFCB replacement	—	—

8.4.3 Transport section misfeed

A. Detection timing

Type	Description
Detection of misfeed at transport section	The registration sensor (PC3) is not turned ON after a lapse of a given time after the after separate sensor (PC4) is turned ON.
	The before read sensor (PC9) is not turned ON after a lapse of a given time after the registration sensor (PC3) is turned ON.
Detection of paper left in transport section	The after separate sensor (PC4) is not turn OFF after a lapse of a given time after the after separate sensor (PC4) is turned ON.
	The registration sensor (PC3) is not turned OFF after a lapse of given time after the after separate sensor (PC4) is turned OFF.

B. Action

Relevant electrical parts	
Take-up motor (M2) Registration sensor (PC3) After separate sensor (PC4) Before read sensor (PC9)	DF control board (DFCB)

Step	Action	WIRING DIAGRAM	
		Control signal	Location (Electrical components)
1	Initial check items	—	—
2	Adjust the height of the guide support for the original glass moving unit See P.406 of the main unit service manual.	—	—
3	PC3 I/O, sensor check	DFCB PJ10DFCB-11 (ON)	DF-608 C-3
4	PC4 I/O, sensor check	DFCB PJ11DFCB-6 (ON)	DF-608 C-5
5	PC9 I/O, sensor check	DFCB PJ14DFCB-8 (ON)	DF-608 C-6
6	M2 operation check	DFCB PJ8DFCB-5 to 10	DF-608 I-6
7	DFCB replacement	—	—

8.4.4 Paper exit section misfeed

A. Detection timing

Type	Description
Detection of misfeed at paper exit section	The eject sensor (PC5) is not turned ON after a lapse of a given time after the before read sensor (PC9) is turned ON.
	The eject sensor (PC5) is not turned ON after a lapse of a given time after the turnover and paper exit motion is performed.
Detection of paper left in paper exit section	The eject sensor (PC5) is not turned OFF after a lapse of a given time after the before read sensor (PC9) is turned OFF.

B. Action

Relevant electrical parts	
Exit motor (M3) Before read sensor (PC9) Eject sensor (PC5)	DF control board (DFCB)

Step	Action	WIRING DIAGRAM	
		Control signal	Location (Electrical components)
1	Initial check items	—	—
2	PC9 I/O, sensor check	DFCB PJ14DFCB-8 (ON)	DF-608 C-6
3	PC5 I/O, sensor check	DFCB PJ3DFCB-3 (ON)	DF-608 I-6
4	M3 operation check	DFCB PJ8DFCB-1 to 4	DF-608 I-7
5	DFCB replacement	—	—

8.4.5 Image reading section misfeed

A. Detection timing

Type	Description
Detection of paper left in image reading section	The before read sensor (PC9) is not turned OFF after a lapse of a given time after the registration sensor (PC3) is turned OFF.
	The before read sensor (PC9) is not turned OFF after a lapse of a given time after the reverse regist sensor (PC8) is turned OFF.

B. Action

Relevant electrical parts	
Reading motor (M1) Reading roller pressure/retraction motor (M4) Registration sensor (PC3) Reverse regist sensor (PC8) Before read sensor (PC9)	DF control board (DFCB)

Step	Action	WIRING DIAGRAM	
		Control signal	Location (Electrical components)
1	Initial check items	—	—
2	Make the adjustment of original stop position. P.34	—	—
3	PC3 I/O, sensor check	DFCB PJ10DFCB-11 (ON)	DF-608 C-3
4	PC8 I/O, sensor check	DFCB PJ12DFCB-2 (ON)	DF-608 I-4
5	PC9 I/O, sensor check	DFCB PJ14DFCB-8 (ON)	DF-608 C-6
6	M1 operation check	DFCB PJ8DFCB-1 to 3	DF-608 I-7
7	M4 operation check	DFCB PJ6DFCB-4 to 5	DF-608 I-5
8	DFCB replacement	—	—

9. Trouble code

9.1 Trouble code list

- The main unit's cpu performs a self-diagnostics function that, on detecting a malfunction, gives the corresponding malfunction code on the touch panel.

Code	Description	Detection timing
C8101	Pressure/retraction mechanism failure before image reading	• During a pressure motion being performed, the read roller sensor (PC6) output does not change from L to H. • During a retraction motion being performed, the read roller sensor (PC6) output does not change from H to L.
C8102	Pressure/retraction mechanism failure at the turnover section	• During a pressure motion being performed, the reverse roller sensor (PC7) output does not change from L to H. • During a retraction motion being performed, the reverse roller sensor (PC7) output does not change from H to L.
C8103	Lift up mechanism failure	• The lift up lower sensor (PC16) is not turned ON after a lapse of a given time after the lift-up motor (M7) moves up (is turned forward). • The lift up upper sensor (PC15) is not turned ON after a lapse of a given time after the lift-up motor (M7) goes down (is turned backward).
C8104	Original glass travel failure	• The glass home pos. sensor (PC205) output does not change from H to L after a lapse of a given time while the original glass moving motor (M204) is working. • The glass home pos. sensor (PC205) output does not change from L to H after a lapse of a given time while the original glass moving motor (M204) is working.
C8105	Original feeding interval failure	• The registration sensor (PC3) is turned ON earlier than a given time after the registration sensor (PC3) is turned OFF during original transportation.
C8302	Cooling fan failure	• The lock signal continues to detect H during a given time while the cooling fan (M6) is spinning • The lock signal continues to detect L during a given time while the cooling fan (M6) is during halts.
CC156	EDH ROM malfunction	• Upgrade of the firmware has not been successful.

9.2 Solution

9.2.1 C8101: Pressure/retraction mechanism failure before image reading

Relevant electrical parts	
Reading roller pressure/retraction motor (M4) Read roller sensor (PC6)	DF control board (DFCB)

Step	Action	WIRING DIAGRAM	
		Control signal	Location (Electrical components)
1	Check the motor and sensor connectors for proper connection, and correct as necessary.	—	—
2	Check the connector of M4 for proper drive coupling, and correct as necessary.	—	—
3	M4 operation check	DFCB PJ6DFCB-4 to 5	DF-608 I-5
4	PC6 I/O, sensor check	DFCB PJ6DFCB-3 (ON)	DF-608 I-5
5	DFCB replacement	—	—

9.2.2 C8102: Pressure/retraction mechanism failure at the turnover section

Relevant electrical parts	
Switchback roller pressure/retraction motor (M5) Reverse roller sensor (PC7)	DF control board (DFCB)

Step	Action	WIRING DIAGRAM	
		Control signal	Location (Electrical components)
1	Check the motor and sensor connectors for proper connection, and correct as necessary.	—	—
2	Check the connector of M5 for proper drive coupling, and correct as necessary.	—	—
3	M5 operation check	DSDTB PJ3DSDTB-6 to 7	DF-608 K to L-9 to 10
4	PC7 I/O, sensor check	DSDTB PJ3DSDTB-3 (ON)	DF-608 K to L-10
5	DFCB replacement	—	—

9.2.3 C8103: Lift up mechanism failure

Relevant electrical parts	
Lift-up motor (M7) Lift up lower sensor (PC16) Lift up upper sensor (PC15)	DF control board (DFCB)

Step	Action	WIRING DIAGRAM	
		Control signal	Location (Electrical components)
1	Check the motor and sensor connectors for proper connection, and correct as necessary.	—	—
2	Check the connector of M7 for proper drive coupling, and correct as necessary.	—	—
3	M7 operation check	DSDTB PJ6DSDTB-1 to 2	DF-608 K to L-11
4	PC16 I/O, sensor check	DFCB PJ11DFCB-3 (ON)	DF-608 C-5
5	PC15 I/O, sensor check	DSDTB PJ3DSDTB-6 (ON)	DF-608 K to L-10
6	DFCB replacement	—	—

9.2.4 C8104: Original glass travel failure

Relevant electrical parts	
Original glass moving unit	Original glass position control board (OGPCB)

Step	Action	WIRING DIAGRAM	
		Control signal	Location (Electrical components)
1	Check the motor and sensor connectors for proper connection, and correct as necessary.	—	—
2	Check the connector of M204 for proper drive coupling, and correct as necessary.	—	—
3	Original glass moving unit replacement	—	—
4	OGPCB replacement	—	—

9.2.5 C8105: Original feeding interval failure

Relevant electrical parts	
Take-up motor (M2) Registration sensor (PC3)	DF control board (DFCB)

Step	Action	WIRING DIAGRAM	
		Control signal	Location (Electrical components)
1	Check the motor and sensor connectors for proper connection, and correct as necessary.	—	—
2	Check the connector of M2 for proper drive coupling, and correct as necessary.	—	—
3	M2 operation check	DFCB PJ8DFCB-5 to 10	DF-608 I-6
4	PC3 I/O, sensor check	DFCB PJ10DFCB-11 (ON)	DF-608 C-3
5	DFCB replacement	—	—

9.2.6 C8302: Cooling fan failure

Relevant electrical parts	
Cooling fan (M6)	DF control board (DFCB)

Step	Action	WIRING DIAGRAM	
		Control signal	Location (Electrical components)
1	Check the connector of M6 for proper connection and correct as necessary.	—	—
2	Check the fan for possible overload and correct as necessary.	—	—
3	M6 operation check	DFCB PJ7DFCB-3	DF-608 I-8
4	DFCB replacement	—	—

9.2.7 CC156: ADF ROM malfunction

Relevant electrical parts	
DF control board (DFCB)	

Step	Action	WIRING DIAGRAM	
		Control signal	Location (Electrical components)
1	Disconnect and then connect the power cord. Turn OFF the main power switch, wait for 10 sec. or more, and turn ON the main power switch.	—	—
2	Rewrite firmware using the compact flash card.	—	—
3	DFCB replacement	—	—

10. Set error detection

- When the ADF or cover set error for some reason is detected, the panel of the main unit will have the following display.

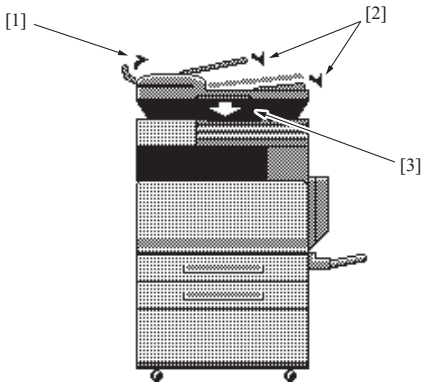

9J07F4C501DA

<Panel display and detection timing for each>

Panel display	Description of error	Detection start	Detection timing
[1]	Transportation cover set error	When the main power switch turn ON.	Read open & close sensor (when light-blocked)
[2]	Document feed tray set error	When the main power switch turn ON.	Feed open & close sensor (when light-blocked)
[3]	ADF set error	When the document is set in the ADF	Original cover/DF open sensor (ON)

KONICA MINOLTA

SERVICE MANUAL

FIELD SERVICE

PC-103/PC-203

2006.03

KONICA MINOLTA BUSINESS TECHNOLOGIES, INC. Ver. 1.0

Revision history

After publication of this service manual, the parts and mechanism may be subject to change for improvement of their performance.
Therefore, the descriptions given in this service manual may not coincide with the actual machine.

When any change has been made to the descriptions in the service manual, a revised version will be issued with a revision mark added as required.

Revision mark:

- To indicate clearly a section revised, show △1 to the left of the revised section.
  A number within △1 represents the number of times the revision has been made.

- To indicate clearly a section revised, show ▲1 in the lower outside section of the corresponding page.
  A number within ▲1 represents the number of times the revision has been made.

NOTE

Revision marks shown in a page are restricted only to the latest ones with the old ones deleted.

- When a page revised in Ver. 2.0 has been changed in Ver. 3.0:
  The revision marks for Ver. 3.0 only are shown with those for Ver. 2.0 deleted.
- When a page revised in Ver. 2.0 has not been changed in Ver. 3.0:
  The revision marks for Ver. 2.0 are left as they are.

2006/03	1.0	—	Issue of the first edition
Date	Service manual Ver.	Revision mark	Descriptions of revision

CONTENTS

PC-103/PC-203

General

1. Product specifications 1

Maintenance

2. Periodical check 3
2.1 Maintenance procedure (Periodical check parts) 3
2.1.1 Replacing the separation roller assy 3
2.1.2 Replacing the feed roller 4
2.1.3 Replacing the pick-up roller 6
3. Other 8
3.1 Disassembly/Adjustment prohibited items 8
3.2 Disassembly/Assembly/Cleaning list (Other parts) 9
3.2.1 Disassembly/Assembly parts list 9
3.2.2 Cleaning parts list 9
3.3 Disassembly/Assembly procedure 10
3.3.1 Right door/Rear right cover/Lower right cover/Front right cover 10
3.3.2 Rear cover 10
3.4 Cleaning procedure 11
3.4.1 Separation roller 11
3.4.2 Feed roller 11
3.4.3 Pick-up roller 12
3.4.4 Vertical transport roller 12

Adjustment/Setting

4. How to use the adjustment section 13
5. Sensor check 14
5.1 Check procedure 14
5.2 Sensor check list 14
5.2.1 Sensor check screen 14
5.2.2 Sensor check list 15
6. Mechanical adjustment 16
6.1 Adjusting the paper reference position 16
6.1.1 Print Positioning: Side Edge 16
6.1.2 Dup Print Positioning: Side Edge 18

Troubleshooting

7. Jam display 19
7.1 Misfeed display 19
7.1.1 Misfeed display resetting procedure 19
7.2 Sensor layout 20
7.3 Solution 21
7.3.1 Initial check items 21
7.3.2 Tray3 feed section/Vertical transport section misfeed (PC-103/PC-203) 22
7.3.3 Tray4 feed section/vertical transport section misfeed (PC-203) 23
8. Trouble code 24
8.1 Trouble code display 24
8.2 Trouble code list 24
8.3 Solution 25
8.3.1 C0206: Tray3 lift-up failure
C0208: Tray4 lift-up failure 25

General

1. Product specifications

A. Type

Name	2 way paper feed cabinet
Type	Front loading type 2 way paper feed device
Installation	Desk type
Document alignment	Center

B. Paper type

Type	Plain paper	60 to 90 g/m^2 (16 to 24 lb)
Size	A5S to A3, 5 $^1/_2$ x 8 $^1/_2$S to 11 x 17	
Capacity	Tray 3	500 sheets (80 g/m^2, 21 lb)
	Tray 4	500 sheets (80 g/m^2, 21 lb)

C. Machine specifications

Power requirements	DC 24 V ± 10 % (supplied from the main unit)
	DC 5 V ± 5 %
Max. power consumption	15 W or less
Dimensions	570 mm (W) x 548 mm (D) x 263 mm (H) 22.5 inch (W) x 21.5 inch (D) x 10.25 inch (H)
Weight	PC-103: 24.0 kg (53 lb) PC-203: 28.0 kg (61.75 lb)

D. Operating environment

Conforms to the operating environment of the main unit.

NOTE

- **These specifications are subject to change without notice.**

Blank Page

Maintenance

2. Periodical check

2.1 Maintenance procedure (Periodical check parts)

2.1.1 Replacing the separation roller assy

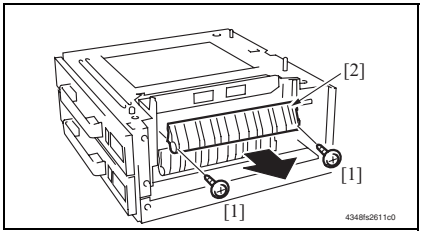

1. Remove the right door.
See P.10
2. Remove two screws [1] and remove the jam access cover [2].

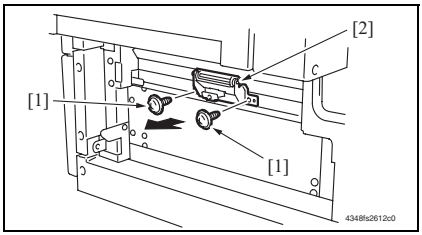

3. Remove two screws [1] and remove the paper separation roller mounting bracket assy [2].

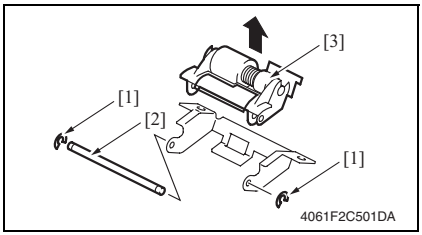

4. Remove two C-rings [1] and the shaft [2], and remove the paper separation roller fixing bracket assy [3].

NOTE

- **Be careful not to lose spring at this time.**

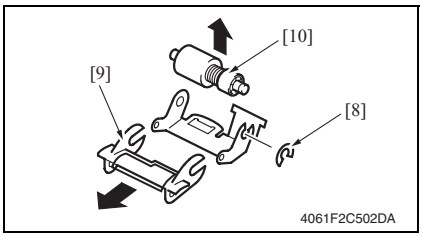

5. Remove the C-ring [1], the guide [2], and remove the separation roller assy [3].
6. Repeat steps 1 to 5 similarly for the 4th drawer.

NOTE

- **Install the separation roller assy while pressing the holder down so that it aligns to the metal bracket of the machine.**
- **Make sure that the separation roller assy is not tilted to the right or left when installed.**

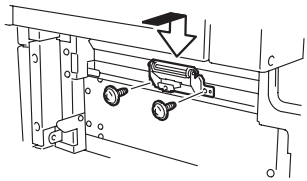

NOTE

- **Replace the separation roller assy, feed roller and pick-up roller at the same time.**

2.1.2 Replacing the feed roller

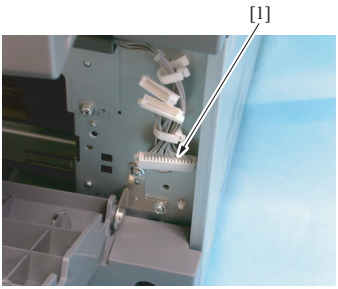

1. Remove the rear right cover. (Remove the right lower cover for 4th row.)

See P.10

2. Remove the tray3. (Remove the tray4 from 4th row.)
3. Remove the paper separation roller mounting bracket assy.

See the procedures 1 to 3 in P.3 “Replacing the separation roller assy.”

4. Disconnect the connector [1] and remove the harness from two wire saddles.

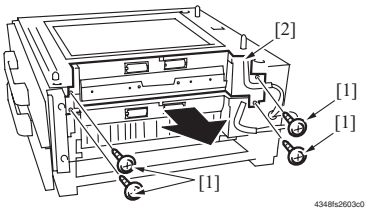

5. Remove four screws [1] and remove the feed unit [2].

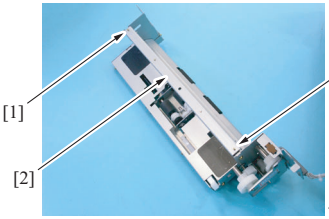

6. Remove two screws [1] and remove the mounting frame [2] for the paper separation roller mounting bracket assy.

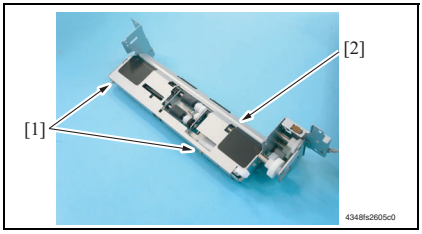

7. Remove two screws [1] and remove the feed cover [2].

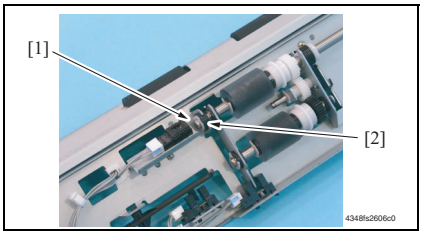

8. Remove the C-ring [1] and remove the bushing [2].

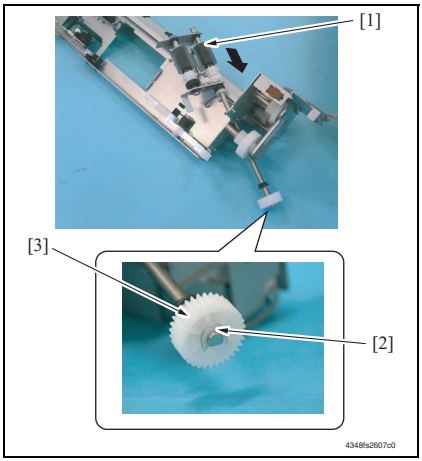

9. Shift the shaft assy [1] in the orientation as shown on the left, and remove the C-ring [2] and the gear [3].

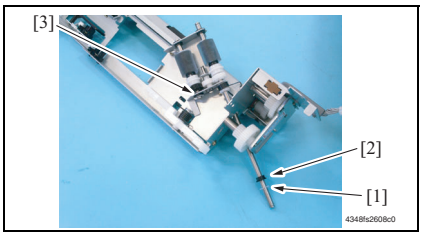

10. Remove the C-ring [1], the bushing [2], and remove the shaft assy [3].

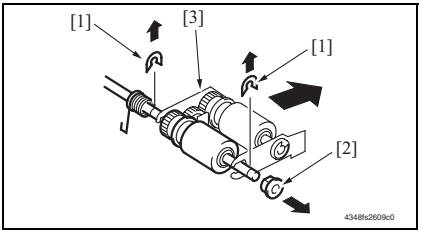

11. Remove two E-rings [1] and the bushing [2], and remove the pick-up roller fixing bracket assy [3].

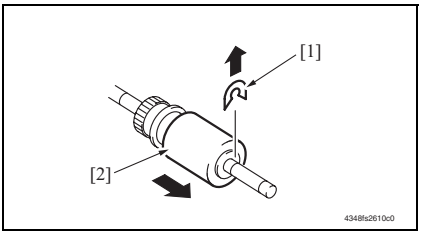

12. Remove the C-ring [1] and remove the feed roller [2].

13. Repeat steps 1 to 12 similarly for the 4th drawer.

NOTE

- **Replace the separation roller assy, feed roller and pick-up roller at the same time.**

2.1.3 Replacing the pick-up roller

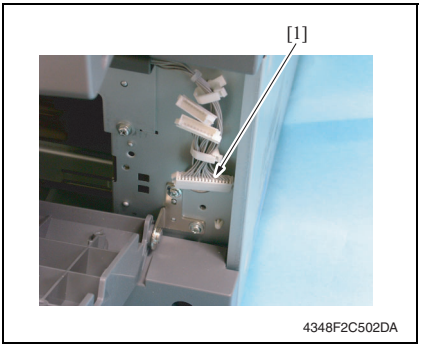

1. Remove the rear right cover. (Remove the right lower cover for 4th row.)

See P.10

2. Remove the tray3. (Remove the tray4 from 4th row.)

3. Remove the separation roller mounting bracket assy.

See the procedures 1 to 3 in P.3 “Replacing the separation roller assy.”

4. Disconnect the connector [1] and remove the harness from two wire saddles.

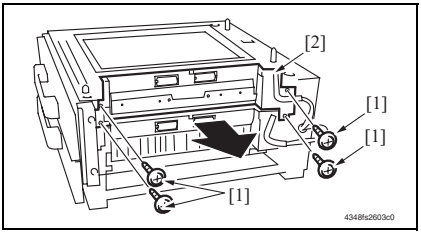

5. Remove four screws [1] and remove the feed unit [2].

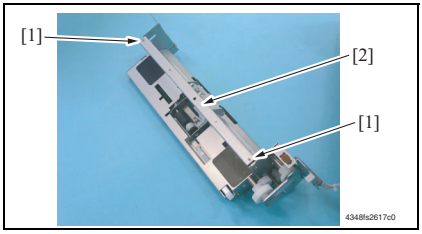

6. Remove two screws [1] and remove the separation roller mounting bracket assy [2] together with frame.

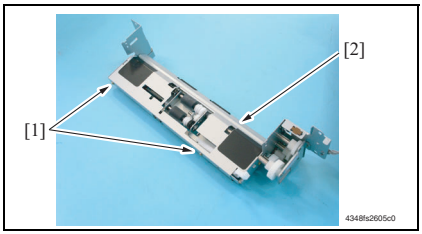

7. Remove two screws [1] and remove the feed cover [2].

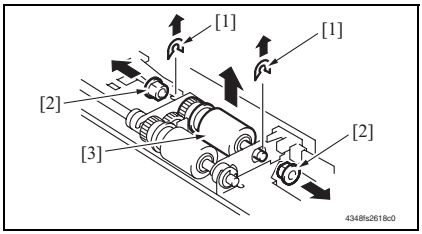

8. Remove two C-rings [1], two bushings [2], and remove the pick-up roller assy [3].

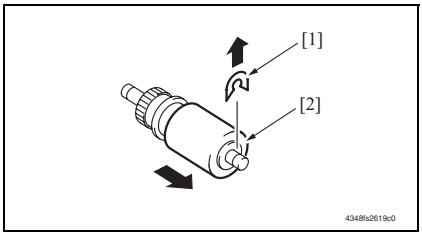

9. Remove the C-ring [1] and remove the pick-up roller [2].
10. Repeat steps 1 to 9 similarly for the 4th drawer.

NOTE

- **Replace the separation roller assy, feed roller and pick-up roller at the same time.**

3. Other

3.1 Disassembly/Adjustment prohibited items

A. Paint-locked screws

NOTE

- **Paint-locked screws show that the assembly or unit secured can only be adjusted or set at the factory and should not be adjusted, set, or removed in the field.**

B. Red painted screws

NOTE

- **When the screws are removed, the red paint is coated on the points where readjustment is required.**
- **Once the red painted screw is removed or loosened, you should make adjustment. Accordingly check the adjustment items in this manual and make necessary adjustment. Note that when two or more screws are used on the part in questions, only one representative screw may be marked with red paint.**

C. Variable resistors on board

NOTE

- **Do not turn the variable resistors on boards for which no adjusting instructions are given in Adjustment/Setting.**

D. Removal of PWBs

⚠ **CAUTION**

- **When removing a circuit board or other electrical component, refer to "SAFETY AND IMPORTANT WARNING ITEMS" and follow the corresponding removal procedures.**
- **The removal procedures given in the following omit the removal of connectors and screws securing the circuit board support or circuit board.**
- **When it is absolutely necessary to touch the ICs and other electrical components on the board, be sure to ground your body.**

3.2 Disassembly/Assembly/Cleaning list (Other parts)

3.2.1 Disassembly/Assembly parts list

No.	Section	Part name	Ref. page
1	Exterior parts	Right door	P.10
2		Rear right cover	P.10
3		Lower right cover	P.10
4		Front right cover	P.10
5		Rear cover	P.10

3.2.2 Cleaning parts list

No.	Section	Part name	Ref. page
1	Feed section	Separation roller	P.11
2		Feed roller	P.11
3		Pick-up roller	P.12
4	Transport section	Vertical transport roller	P.12

3.3 Disassembly/Assembly procedure

3.3.1 Right door/Rear right cover/Lower right cover/Front right cover

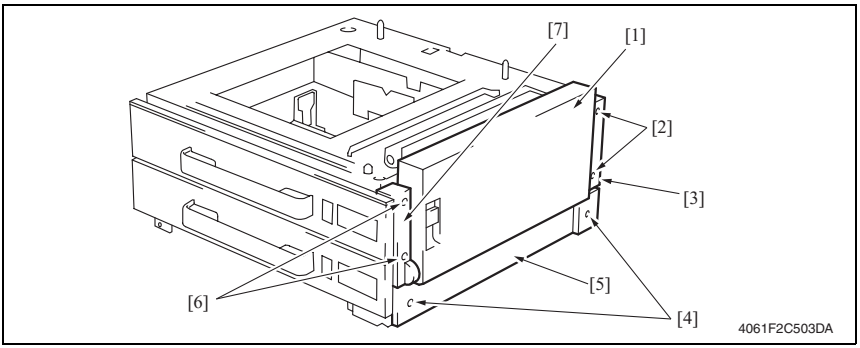

1. Open the right door [1].
2. Remove the right door [1].
3. Remove two screws [2] and remove the rear right cover [3].
4. Remove two screws [4] and remove the lower right cover [5].
5. Remove two screws [6] and remove the front right cover [7].

3.3.2 Rear cover

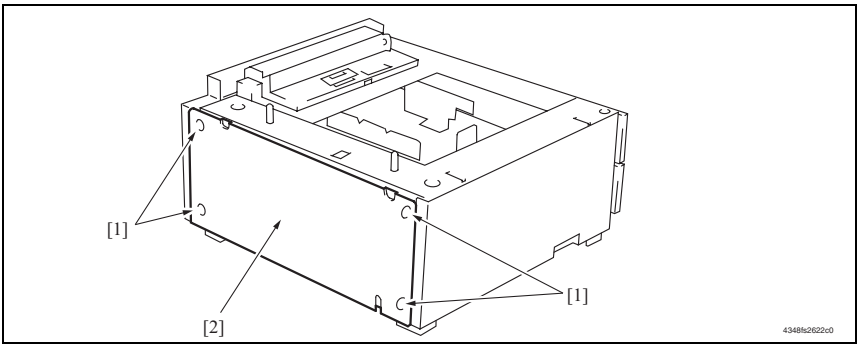

1. Remove four screws [1] and remove the rear cover [2].

3.4 Cleaning procedure

NOTE

- **The alcohol described in the cleaning procedure represents the isopropyl alcohol.**

3.4.1 Separation roller

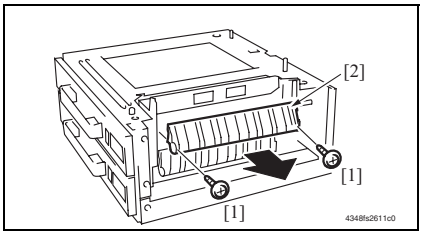

1. Remove the right door.
See P.10
2. Remove two screws [1] and remove the jam access cover [2].

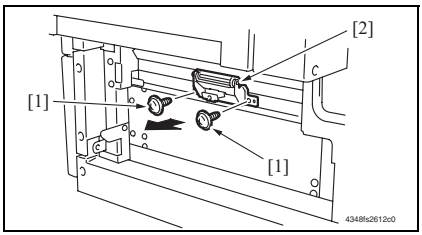

3. Remove two screws [1] and remove the separation roller mounting bracket assy [2].

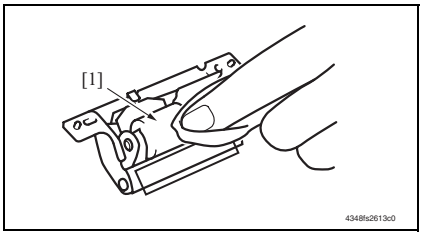

4. Using a soft cloth dampened with alcohol, wipe the separation roller [1] clean of dirt.
5. Repeat steps 1 to 4 similarly for the 4th drawer.

3.4.2 Feed roller

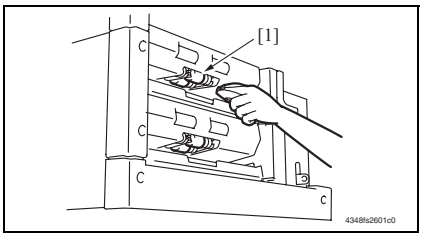

1. Remove the tray3. (remove the tray4 from 4th row.)
2. Remove the separation roller mounting bracket assy.
See the procedures 1 to 3 in P.11 “Cleaning of the separation roller.”
3. Using a soft cloth dampened with alcohol, wipe the feed roller [1] clean of dirt.
4. Repeat steps 1 to 3 similarly for the 4th drawer.

3.4.3 Pick-up roller

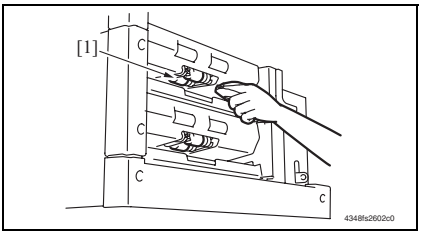

1. Remove the tray3. (remove the tray4 from 4th row.)
2. Remove the separation roller mounting bracket assy.

See the procedures 1 to 3 in P.11 “Cleaning of the separation roller.”

3. Using a soft cloth dampened with alcohol, wipe the pick-up roller [1] clean of dirt.
4. Repeat steps 1 to 3 similarly for the 4th drawer.

3.4.4 Vertical transport roller

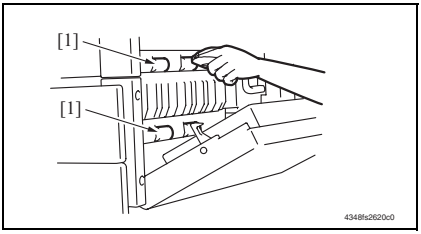

1. Open the right door.
2. Using a soft cloth dampened with alcohol, wipe the vertical transport roller [1] clean of dirt.

Adjustment/Setting

4. How to use the adjustment section

- “Adjustment/Setting” contains detailed information on the adjustment items and procedures for this machine.
- Throughout this “Adjustment/Setting,” the default settings are indicated by “ ”.

Advance checks

Before attempting to solve the customer problem, the following advance checks must be made. Check to see if:

- The power supply voltage meets the specifications.
- The power supply is properly grounded.
- The machine shares the power supply with any other machine that draws large current intermittently (e.g., elevator and air conditioner that generate electric noise).
- The installation site is environmentally appropriate: high temperature, high humidity, direct sunlight, ventilation, etc.; levelness of the installation site.
- The original has a problem that may cause a defective image.
- The density is properly selected.
- The original glass, slit glass, or related part is dirty.
- Correct paper is being used for printing.
- The units, parts, and supplies used for printing (developer, PC drum, etc.) are properly replenished and replaced when they reach the end of their useful service life.
- Toner is not running out.

⚠ **CAUTION**

- **Be sure to unplug the power cord of the machine before starting the service job procedures.**
- **If it is unavoidably necessary to service the machine with its power turned ON, use utmost care not to be caught in the scanner cables or gears of the exposure unit.**
- **Special care should be used when handling the fusing unit which can be extremely hot.**
- **The developing unit has a strong magnetic field. Keep watches and measuring instruments away from it.**
- **Take care not to damage the PC drum with a tool or similar device.**
- **Do not touch IC pins with bare hands.**

5. Sensor check

5.1 Check procedure

- To allow sensors to be checked for operation easily and safely, data applied to the IC on the board can be checked on the panel with the main unit in the standby state (including a misfeed, malfunction, and closure failure condition).

A. Procedure

1. Call the Service Mode to the screen.

See P.304 of the main unit service manual.

2. Touch [State Confirmation].

3. Touch [Sensor Check].

5.2 Sensor check list

5.2.1 Sensor check screen

- This is only typical screen which may be different from what are shown on each individual main unit.

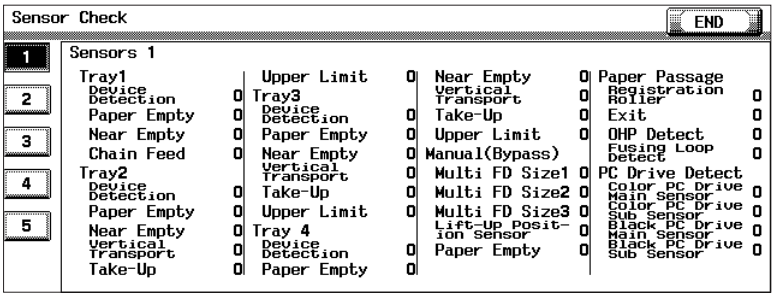

4061F3E810DA

5.2.2 Sensor check list

A. Sensors 1

Symbol	Panel display		Part/Signal name	Operation characteristics/Panel display	
				1	0
PC112-PC	Tray3	Device Detection	Tray3 device detection sensor	Set	Out of position
PC115-PC		Paper Empty	Tray3 empty sensor	Paper not present	Paper present
PC113-PC		Near Empty	Tray3 near empty sensor	Blocked	Unblocked
PC117-PC		Vertical Transport	Tray3 vertical transport sensor	Paper present	Paper not present
PC116-PC		Take-Up	Tray3 take-up sensor	Paper present	Paper not present
PC114-PC		Upper Limit	Tray3 lift-up upper sensor	Raised Position	Not raised
PC121-PC	Tray4	Device Detection	Tray4 device detection sensor	Set	Out of position
PC124-PC		Paper Empty	Tray4 empty sensor	Paper not present	Paper present
PC122-PC		Near Empty	Tray4 near empty sensor	Blocked	Unblocked
PC126-PC		Vertical Transport	Tray4 vertical transport sensor	Paper present	Paper not present
PC125-PC		Take-Up	Tray4 take-up sensor	Paper present	Paper not present
PC123-PC		Upper Limit	Tray4 lift-up upper sensor	Raised Position	Not raised

6. Mechanical adjustment

6.1 Adjusting the paper reference position

NOTE

- **Make this adjustment after any of the following procedures has been performed.**
  When the PH unit has been replaced.
  When the image on the print is offset in the sub scan direction.
  When a faint image occurs on the leading edge of the image.

6.1.1 Print Positioning: Side Edge

1. Call the Service Mode to the screen.

See P.304 of the main unit service manual.

2. Touch [Machine] → [Printer Area].
3. Touch [Print Positioning: Side Edge] → [3rd.].

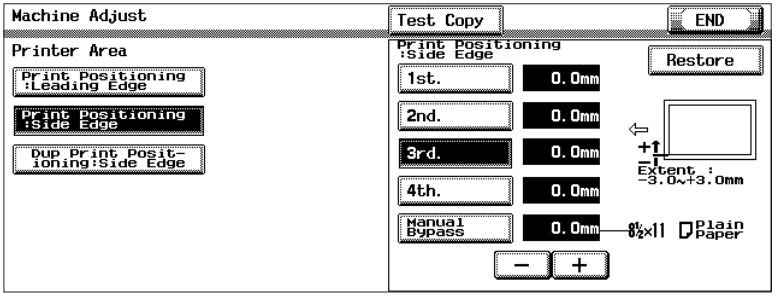

4061F3E811DA

4. Press the Start key to let the machine produce a test print.

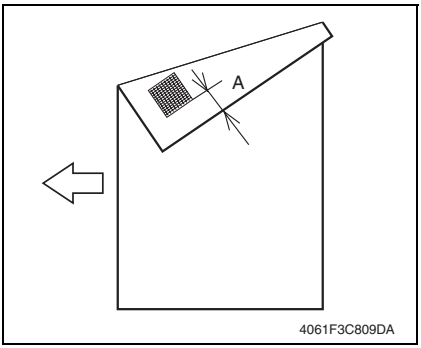

4061F3C809DA

5. Measure the width of printed reference line A.
   Specification: 3.0 mm ± 1.0 mm
6. If the measured width A falls outside the specified range, enter the correction value using the [-] or [+] key.
7. Produce another test print and check to see if width A falls within the specified range.

NOTE

- **If the use of the [-] or [+] key does not allow the measurement to fall within the specified range, perform the following steps.**

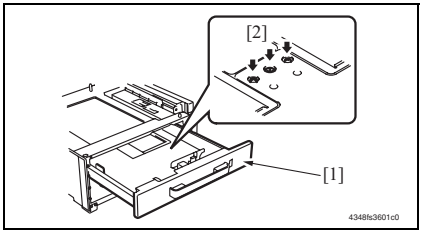

8. Slide out the drawer [1] and unload paper from it.
9. Loosen three screws [2] at the center of the paper lifting plate.

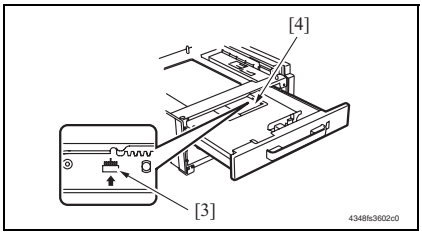

10. Watching the graduations [1] provided in the drawer, move the edge guide [2] in the rear.

- If width A is greater than the specified value, move the edge guide toward the front.
- If width A is smaller than the specified value, move the edge guide toward the rear.

11. Perform another test print and check the reference deviation.
12. Repeat the adjustment until the reference line falls within the specified range.
13. Tighten the adjustment screw.
14. Repeat steps 1 to 13 similarly for the tray 4.
15. Touch [END].
16. Touch [Exit] on the Service Mode screen.
17. Turn OFF the main power switch. then, wait for 10 sec. or more and turn ON the main power switch.

6.1.2 Dup Print Positioning: Side Edge

1. Call the Service Mode to the screen.

See P.304 of the main unit service manual.

2. Touch [Machine] → [Printer Area].
3. Touch [Dup Print Positioning: Side Edge] → [3rd.].

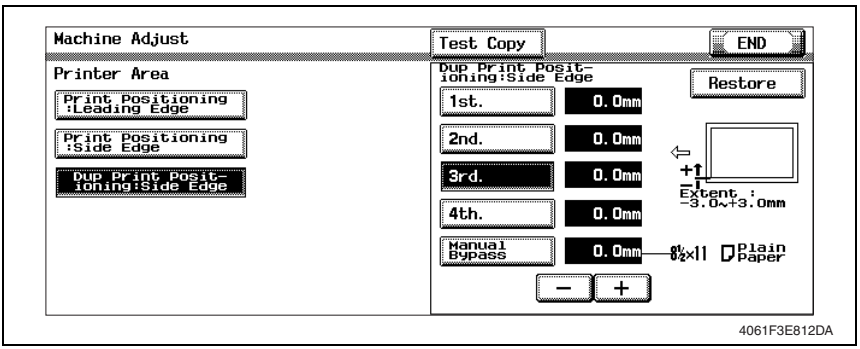

4. Press the Start key to let the machine produce a test pattern.

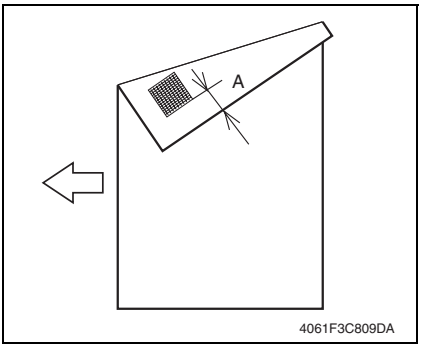

5. Measure the width of printed reference line A.
   Specification: 3.0 mm ± 2.0 mm
6. If the measured width A falls outside the specified range, enter the correction value using the [-] or [+] key.
7. Produce another test print and check to see if width A falls within the specified range.

8. Repeat steps 1 to 7 similarly for the tray 4.
9. Touch [END].
10. Touch [Exit] on the Service Mode screen.
11. Turn OFF the main power switch. then, wait for 10 sec. or more and turn ON the main power switch.

Troubleshooting

7. Jam display

7.1 Misfeed display

- When misfeed occurs, message, misfeed location “Blinking” and paper location “Lighting” are displayed on the touch panel of the main unit.

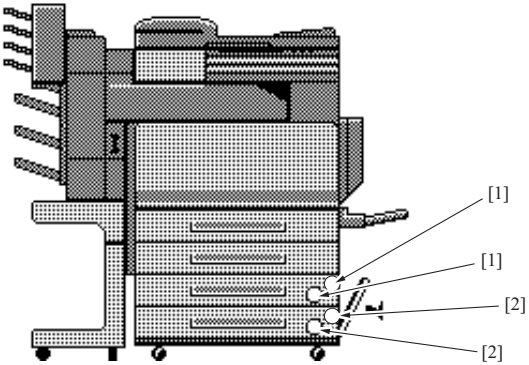

4061F4C804DA

No.	Code	Misfeed location	Misfeed access location	Action
[1]	1301	Tray 3 feed section	Right door	P.22
	2001	Tray 3 paper vertical transport section		
[2]	1401	Tray 4 feed section	Right door	P.23
	2001	Tray 4 paper vertical transport section		

7.1.1 Misfeed display resetting procedure

- Open the corresponding door, clear the sheet of paper misfed, and close the door.

7.2 Sensor layout

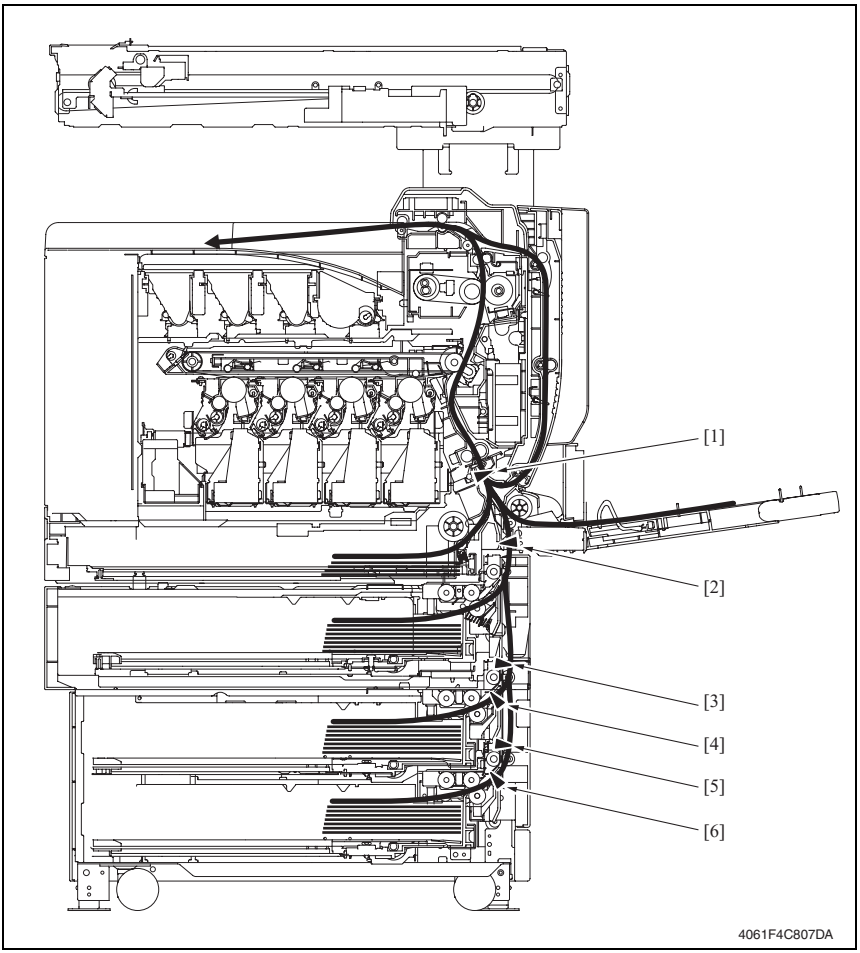

[1]	Registration roller sensor	PC1	[4]	Tray3 take-up sensor	PC116-PC
[2]	Tray2 vertical transport sensor	PC8-PC	[5]	Tray4 vertical transport sensor	PC126-PC
[3]	Tray3 vertical transport sensor	PC117-PC	[6]	Tray4 take-up sensor	PC125-PC

7.3 Solution

7.3.1 Initial check items

- When a paper misfeed occurs, first perform the following initial check items.

Check item	Action
Does paper meet product specifications?	Replace paper.
Is the paper curled, wavy, or damp?	Replace paper. Instruct the user on the correct paper storage procedures.
Is a foreign object present along the paper path, or is the paper path deformed or worn?	Clean the paper path and replace if necessary.
Are the paper separator fingers dirty, deformed, or worn?	Clean or replace the defective paper separator finger.
Are rolls/rollers dirty, deformed, or worn?	Clean or replace the defective roll/roller.
Are the edge guide and trailing edge stop at the correct position to accommodate the paper?	Set as necessary.
Are the actuators operating correctly?	Correct or replace the defective actuator.

7.3.2 Tray3 feed section/Vertical transport section misfeed (PC-103/PC-203)

A. Detection timing

Type	Description
Tray3 feed section/ vertical transport section misfeed detection	The leading edge of the paper does not block the tray3 vertical transport sensor (PC117-PC) even after the set period of time has elapsed after the tray3 take-up motor (M122-PC) is energized.
	The tray2 vertical transport sensor (PC8-PC) is not blocked even after the lapse of a given period of time after the tray3 vertical transport sensor (PC117-PC) has been blocked by a paper.
Tray 3 vertical transport section loop registration reversing jam	Rise timing of load for registration is earlier than the one for making the loop at front of the registration roller at tray 3 take-up.
Tray3 detection of paper remaining	The tray3 vertical transport sensor (PC117-PC) is blocked when the main power switch is set to ON, a door or cover is opened and closed, or a misfeed or mal-function is reset.
	The tray3 take-up sensor (PC116-PC) is blocked when the main power switch is set to ON, a door or cover is opened and closed, or a misfeed or malfunction is reset.
Misfeed detected as a result of delayed deactiva-tion of sensor	The tray3 vertical transport sensor (PC117-PC) is not unblocked even after the lapse of a given period of time after PC117-PC has been blocked by a paper.

B. Action

Relevant electrical parts	
Tray3 take-up sensor (PC116-PC) Tray3 vertical transport sensor (PC117-PC) Tray2 vertical transport sensor (PC8-PC) Tray3 take-up motor (M122-PC) Registration roller sensor (PC1)	Control board (PWB-C2 PC)

Step	Action	WIRING DIAGRAM	
		Control signal	Location (Electrical components)
1	Initial check items	—	—
2	PC1 sensor check	MFPB CNSEN-3 (ON)	bizhub C300/C352 C-3
3	PC116-PC sensor check	PWB-C2 PC PJ6C2 PC-8 (ON)	PC-103, PC-203 B-2
4	PC117-PC sensor check	PWB-C2 PC PJ6C2 PC-11 (ON)	PC-103, PC-203 B-2
5	PC8-PC sensor check	PCCB PJ6PCCB-11 (ON)	bizhub C300/C352 S-25
6	M122-PC operation check	PWB-C2 PC PJ5C2 PC-1 to 4	PC-103, PC-203 B-3
7	PWB-C2 PC replacement	—	—

7.3.3 Tray4 feed section/vertical transport section misfeed (PC-203)

A. Detection timing

Type	Description
Tray4 feed section/ vertical transport section misfeed detection	The leading edge of the paper does not block the tray4 vertical transport sensor (PC126-PC) even after the set period of time has elapsed after the tray4 take-up motor (M123-PC) is energized.
	The tray3 vertical transport sensor (PC117-PC) is not blocked even after the lapse of a given period of time after the tray4 vertical transport sensor (PC126-PC) has been blocked by a paper.
Tray 4 vertical transport section loop registration reversing jam	Rise timing of load for registration is earlier than the one for making the loop at front of the registration roller at tray 4 take-up.
Tray4 detection of paper remaining	The tray4 vertical transport sensor (PC126-PC) is blocked when the main power switch is set to ON, a door or cover is opened and closed, or a misfeed or mal-function is reset.
	The tray4 take-up sensor (PC125-PC) is blocked when the main power switch is set to ON, a door or cover is opened and closed, or a misfeed or malfunction is reset.
Misfeed detected as a result of delayed deactiva-tion of sensor	The tray4 vertical transport sensor (PC126-PC) is not unblocked even after the lapse of a given period of time after PC126-PC has been blocked by a paper.

B. Action

Relevant electrical parts	
Tray4 take-up sensor (PC125-PC) Tray4 vertical transport sensor (PC126-PC) Tray3 vertical transport sensor (PC117-PC) Tray4 take-up motor (M123-PC) Registration roller sensor (PC1)	Control board (PWB-C2 PC)

Step	Action	WIRING DIAGRAM	
		Control signal	Location (Electrical components)
1	Initial check items	—	—
2	PC1 sensor check	MFPB CNSEN-3 (ON)	bizhub C300/C352 C-3
3	PC125-PC sensor check	PWB-C2 PC PJ10C2 PC-8 (ON)	PC-203 G-5
4	PC126-PC sensor check	PWB-C2 PC PJ11C2 PC-2 (ON)	PC-203 G-5 to 6
5	PC117-PC sensor check	PWB-C2 PC PJ6C2 PC-11 (ON)	PC-103, PC-203 B-2
6	M123-PC operation check	PWB-C2 PC PJ9C2 PC-1 to 4	PC-203 G-4 to 5
7	PWB-C2 PC replacement	—	—

8. Trouble code

8.1 Trouble code display

- The main unit's CPU performs a self-diagnostics function that, on detecting a malfunction, gives the corresponding malfunction code on the touch panel.

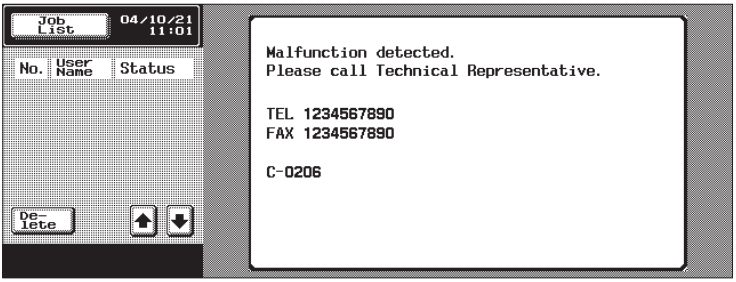

4061F4E504DA

8.2 Trouble code list

Code	Item	Description
C0206	Tray3 lift-up failure	• The lift-up upper sensor is not blocked even after the set period of time has elapsed after the paper lift-up operation for the drawer began.
C0208	Tray4 lift-up failure	

- Open and close the front door, or turn OFF the main power switch. Then, wait for 10 sec. or more and turn ON the main power switch to reset the malfunction display.

8.3 Solution

8.3.1 C0206: Tray3 lift-up failure
C0208: Tray4 lift-up failure

Relevant electrical parts	
Tray3 lift-up motor (M124-PC) Tray4 lift-up motor (M125-PC) Tray3 lift-up upper sensor (PC114-PC) Tray4 lift-up upper sensor (PC123-PC)	Control board (PWB-C2 PC) Main unit mechanical control board (MFPB) Main unit DC power supply (DCPU)

Step	Action	WIRING DIAGRAM	
		Control signal	Location (Electrical components)
1	Check the motor and sensor connectors for proper connection, and correct as necessary.	—	—
2	Check the connector of each motor for proper drive coupling, and correct as necessary.	—	—
3	Check the DCPU connector for proper connection, and correct as necessary.	—	—
4	PC114-PC sensor check	PWB-C2 PC PJ6C2 PC-3 (ON)	PC-103, PC-203 B-1
5	PC123-PC sensor check	PWB-C2 PC PJ9C2 PC-1 to 4	PC-203 G-4 to 5
6	M124-PC operation check	PWB-C2 PC PJ4C2 PC-4 to 5	PC-103, PC-203 B-4
7	M125-PC operation check	PWB-C2 PC PJ8C2 PC-12 to 13	PC-203 G-1
8	PWB-C2 PC replacement	—	—
9	MFPB replacement	—	—
10	DCPU replacement	—	—

Blank Page

KONICA MINOLTA

SERVICE MANUAL

FIELD SERVICE

PC-403

2006.03

KONICA MINOLTA BUSINESS TECHNOLOGIES, INC. Ver. 1.0

Revision history

After publication of this service manual, the parts and mechanism may be subject to change for improvement of their performance.
Therefore, the descriptions given in this service manual may not coincide with the actual machine.

When any change has been made to the descriptions in the service manual, a revised version will be issued with a revision mark added as required.

Revision mark:

- To indicate clearly a section revised, show △1 to the left of the revised section.
  A number within △1 represents the number of times the revision has been made.

- To indicate clearly a section revised, show ▲1 in the lower outside section of the corresponding page.
  A number within ▲1 represents the number of times the revision has been made.

NOTE

Revision marks shown in a page are restricted only to the latest ones with the old ones deleted.

- When a page revised in Ver. 2.0 has been changed in Ver. 3.0:
  The revision marks for Ver. 3.0 only are shown with those for Ver. 2.0 deleted.
- When a page revised in Ver. 2.0 has not been changed in Ver. 3.0:
  The revision marks for Ver. 2.0 are left as they are.

2006/03	1.0	—	Issue of the first edition
Date	Service manual Ver.	Revision mark	Descriptions of revision

CONTENTS

PC-403

General

1. Product specification 1

Maintenance

2. Periodical check 3
2.1 Maintenance procedure (Periodical check parts) 3
2.1.1 Replacing the separation roller assy 3
2.1.2 Replacing the feed roller 4
2.1.3 Replacing the pick-up roller 6
3. Other 8
3.1 Disassembly/Adjustment prohibited items 8
3.2 Disassembly/Assembly/Cleaning list (Other parts) 9
3.2.1 Disassembly/Assembly parts list 9
3.2.2 Cleaning parts list 9
3.3 Disassembly/Assembly procedure 10
3.3.1 Right door/Rear right cover/Lower right cover/Front right cover 10
3.3.2 Rear cover 10
3.3.3 Drawer 11
3.3.4 Wire 11
3.4 Cleaning procedure 14
3.4.1 Separation roller 14
3.4.2 Feed roller 14
3.4.3 Pick-up roller 14
3.4.4 Vertical transport roller 15

Adjustment/Setting

4. How to use the adjustment section 17
5. Sensor check 18
5.1 Check procedure 18
5.2 Sensor check list 18
5.2.1 Sensor check screen 18
5.2.2 Sensor check list 19
6. Mechanical adjustment 20
6.1 Adjusting the paper reference position 20

6.1.1 Print Positioning: Side Edge 20
6.1.2 Dup Print Positioning: Side Edge 22
6.2 Shifter movement timing belt adjustment 23

Troubleshooting

7. Jam display 25
7.1 Misfeed display 25
7.1.1 Misfeed display resetting procedure 25
7.2 Sensor layout 26
7.3 Solution 27
7.3.1 Initial check items 27
7.3.2 LCT paper feed section/vertical transport section misfeed 28
8. Trouble code 29
8.1 Trouble code display 29
8.2 Trouble code list 30
8.3 Solution 32
8.3.1 C0001: LCT communication error 32
8.3.2 C0209: LCT elevator motor failure 32
8.3.3 C0210: LCT lift failure 33
8.3.4 C0212: LCT Lock release failure 33
8.3.5 C0213: LCT shift gate operation failure 34
8.3.6 C0214: LCT shift failure 34
8.3.7 C0215: LCT shift motor failure 35

General

1. Product specification

A. Type

Name	Large capacity cabinet
Type	Front loading type LCC
Installation	Desk type
Document alignment	Center

B. Paper type

Type	Plain paper	60 to 90 g/m^2 (16 to 24 lb)
Size	A4, 8 $^1/_2$ x 11	
Capacity	2500 sheets (80 g/m^2, 21 lb)	

C. Machine specifications

Power requirements	DC 24 V ± 10% (supplied from the main unit)
	DC 5 V ± 5%
Max. power consumption	45 W or less
Dimensions	570 mm (W) x 548 mm (D) x 263 mm (H) 22.5 inch (W) x 21.5 inch (D) x 10.25 inch (H)
Weight	28.0 kg (61.75 lb)

D. Operating environment

Conforms to the operating environment of the main unit.

NOTE

- **These specifications are subject to change without notice.**

Blank Page

Maintenance

2. Periodical check

2.1 Maintenance procedure (Periodical check parts)

2.1.1 Replacing the separation roller assy

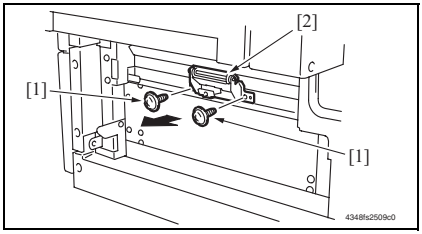

1. Remove the right door.
See P.10
2. Remove two screws [1] and remove the separation roller mounting bracket assy [2].

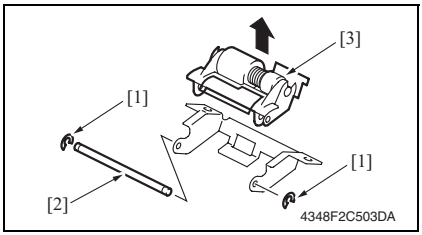

3. Remove two C-rings [1] and the shaft [2], and remove the separation roller fixing bracket assy [3].

NOTE
- **Be careful not to lose spring at this time.**

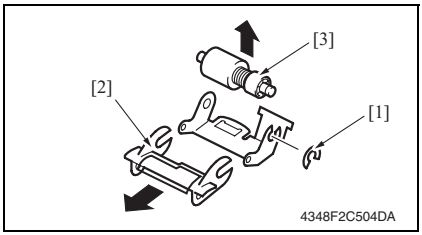

4. Remove the C-ring [1], the guide [2], and remove the separation roller assy [3].

NOTE
- **Install the separation roller assy while pressing the holder down so that it aligns to the metal bracket of the machine.**
- **Make sure that the separation roller assy is not tilted to the right or left when installed.**

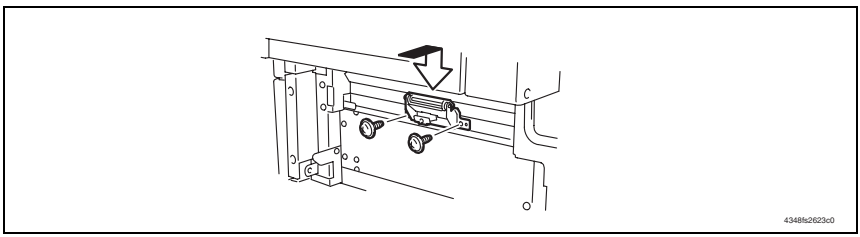

NOTE
- **Replace the separation roller assy, feed roller and pick-up roller at the same time.**

2.1.2 Replacing the feed roller

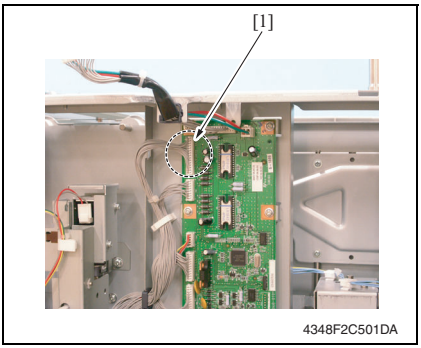

1. Remove the rear cover and the rear right cover.

See P.10

2. Remove the tray3.
3. Remove the separation roller mounting bracket assy.

See the procedures 1 to 2 in P.3 “Separation roller assy.”

4. Disconnect the connector [1] from the main control board.

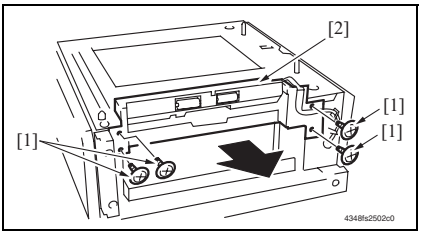

5. Remove four screws [1] and remove the paper feed unit [2].

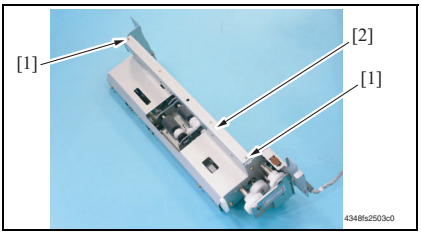

6. Remove two screws [1] and remove the mounting frame [2] for the separation roller mounting bracket assy.

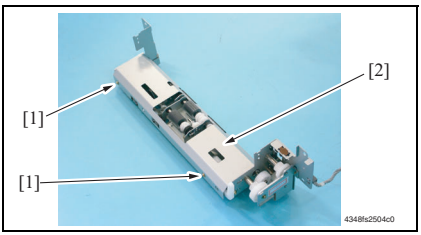

7. Remove two screws [1] and remove the paper feed cover [2].

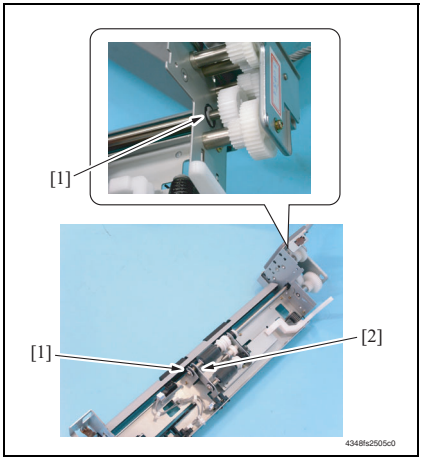

8. Remove two C-rings [1] and remove the bushing [2].

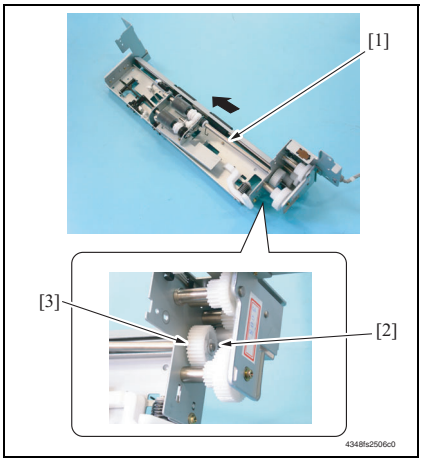

9. Shift the shaft assy [1] in the orientation as shown on the left, and remove the C-ring [2] and the gear [3].

10. Remove the shaft assy [1].

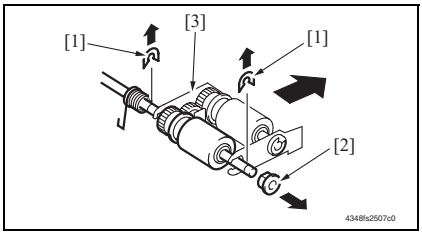

11. Remove two E-rings [1] and the bushing [2], and remove the pick-up roller fixing bracket assy [3].

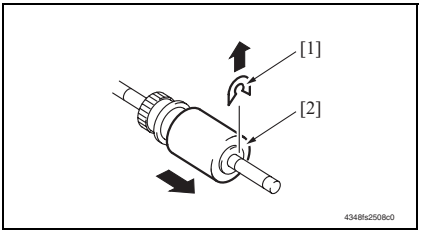

12. Remove the C-ring [1] and remove the feed roller [2].

NOTE

- **Replace the separation roller assy, feed roller and pick-up roller at the same time.**

2.1.3 Replacing the pick-up roller

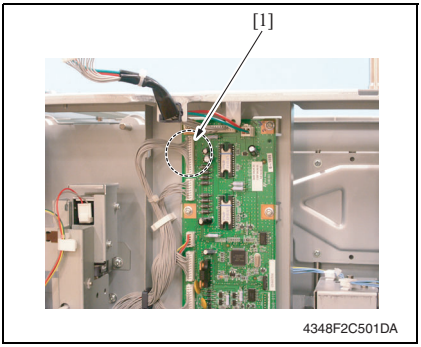

1. Remove the rear cover and the rear right cover.

See P.10

2. Remove the tray 3.

3. Remove the separation roller mounting bracket assy.

See the procedures 1 to 2 in P.3 “Separation roller assy.”

4. Disconnect the connector [1] from the main control board.

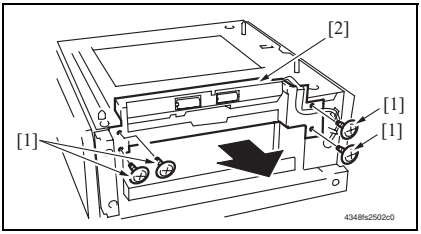

5. Remove four screws [1] and remove the paper feed unit [2].

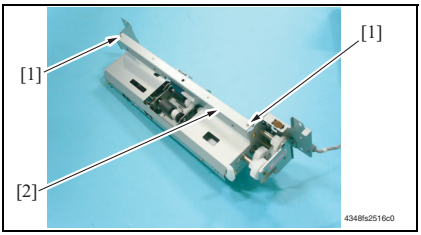

6. Remove two screws [1] and remove the separation roller mounting bracket assy [2] together with frame.

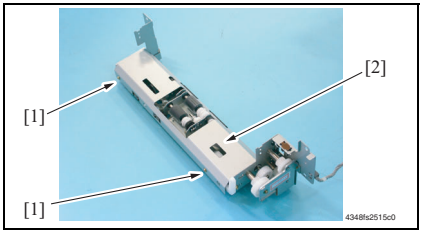

7. Remove two screws [1] and remove the paper feed cover [2].

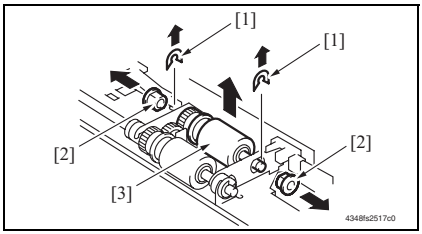

8. Remove two C-rings [1], two bushings [2], and the pick-up roller assy [3].

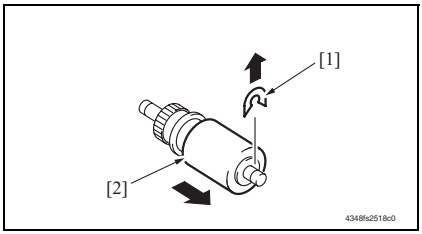

9. Remove the C-ring [1] and remove the pick-up roller [2].

NOTE

- **Replace the separation roller assy, feed roller and pick-up roller at the same time.**

3. Other

3.1 Disassembly/Adjustment prohibited items

A. Paint-locked screws

NOTE
- **Paint-locked screws show that the assembly or unit secured can only be adjusted or set at the factory and should not be adjusted, set, or removed in the field.**

B. Red painted screws

NOTE
- **When the screws are removed, the red paint is coated on the points where readjustment is required.**
- **Once the red painted screw is removed or loosened, you should make adjustment. Accordingly check the adjustment items in this manual and make necessary adjustment. Note that when two or more screws are used on the part in questions, only one representative screw may be marked with red paint.**

C. Variable resistors on board

NOTE
- **Do not turn the variable resistors on boards for which no adjusting instructions are given in Adjustment/Setting.**

D. Removal of PWBs

⚠ **CAUTION**
- **When removing a circuit board or other electrical component, refer to "SAFETY AND IMPORTANT WARNING ITEMS" and follow the corresponding removal procedures.**
- **The removal procedures given in the following omit the removal of connectors and screws securing the circuit board support or circuit board.**
- **When it is absolutely necessary to touch the ICs and other electrical components on the board, be sure to ground your body.**

3.2 Disassembly/Assembly/Cleaning list (Other parts)

3.2.1 Disassembly/Assembly parts list

No.	Section	Part name	Ref. page
1	Exterior parts	Right door	P.10
2		Rear right cover	P.10
3		Lower right cover	P.10
4		Front right cover	P.10
5		Rear cover	P.10
6	Unit	Drawer	P.11
7		Wire	P.11

3.2.2 Cleaning parts list

No.	Section	Part name	Ref. page
1	Feed section	Separation roller	P.14
2		Feed roller	P.14
3		Pick-up roller	P.14
4	Transport section	Vertical transport roller	P.15

3.3 Disassembly/Assembly procedure

3.3.1 Right door/Rear right cover/Lower right cover/Front right cover

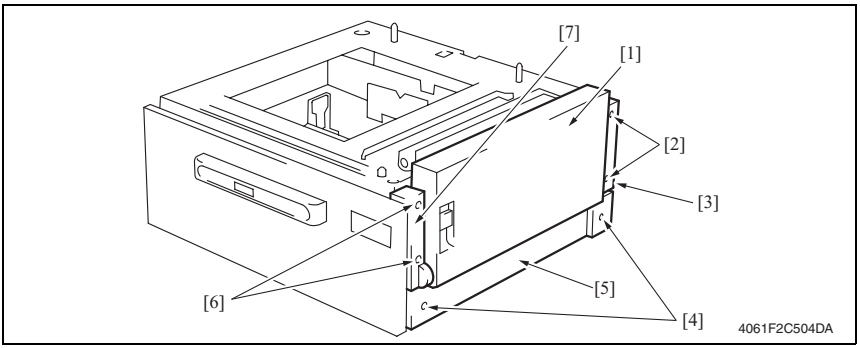

1. Open the right door [1].
2. Remove the right door [1].
3. Remove two screws [2] and remove the rear right cover [3].
4. Remove two screws [4] and remove the lower right cover [5].
5. Remove two screws [6] and remove the front right cover [7].

3.3.2 Rear cover

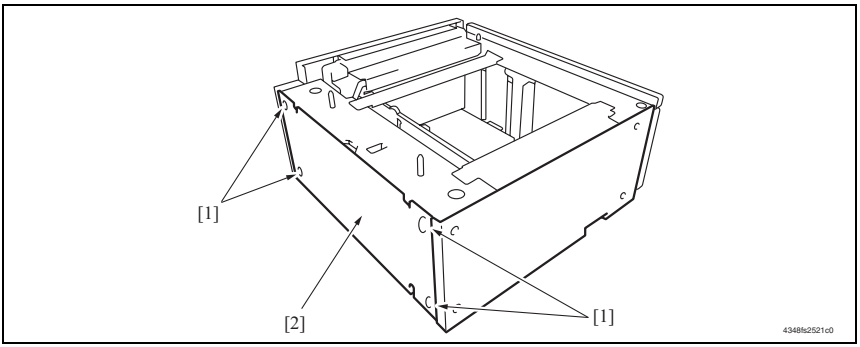

1. Remove four screws [1] and remove the rear cover [2].

3.3.3 Drawer

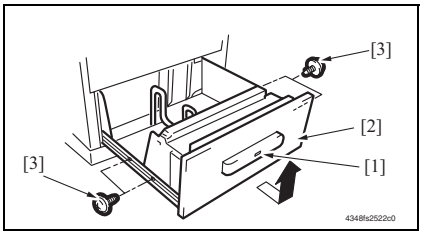

1. Press the drawer eject button [1] and slide out the drawer [2].
2. Remove the paper.
3. Remove four screws [3] and slide out the drawer [2].

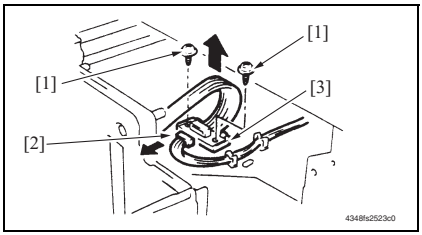

4. Remove two screws [1], the connector [2], and remove the connector board [3].
5. Remove the drawer.

NOTE

- **When removing the connector board, use care not to drop the drawer from the guide rail.**

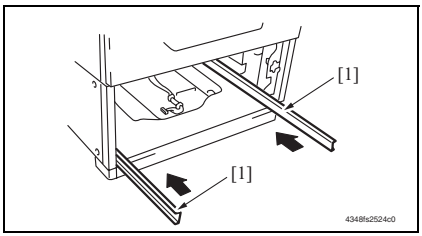

⚠ **CAUTION**

- **To prevent injuries, press the guide rail [1] inside the machine.**

3.3.4 Wire

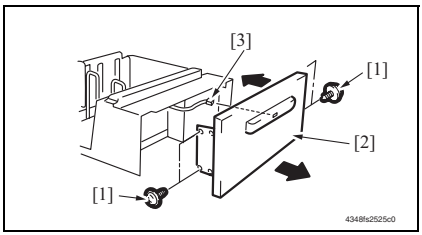

1. Remove the drawer.
See P.11
2. Remove four screws [1] and remove the front cover assy [2].
3. Disconnect the connector [3].

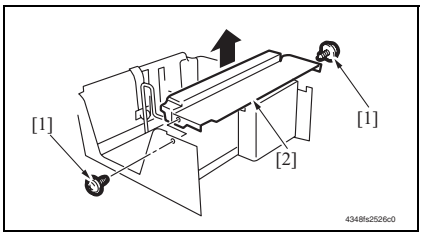

4. Remove two screws [1] and the inner cover assy [2].

NOTE

- **Do not peel off pulley protective mylar sheet.**

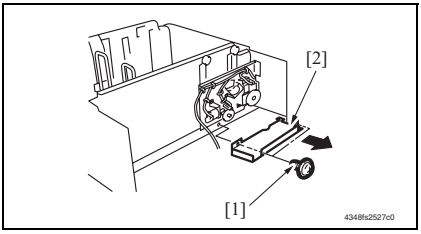

5. Remove two screws [1] and remove the driver cover [2].

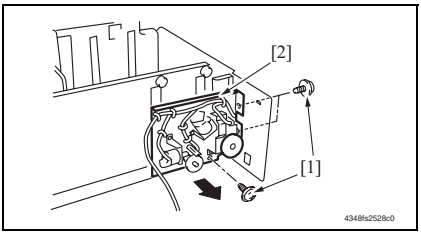

6. Remove three screws [1] and remove the driver mounting plate assy [2].

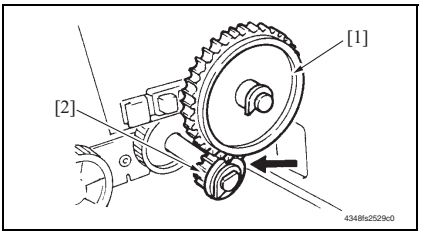

NOTE

- **When assembling, be sure to engage rib of gear 1 [1] with convex section of gear 2 [2].**

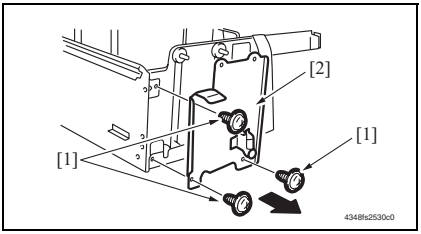

7. Remove three screws [1] and remove the reinforcement bracket assy [2].

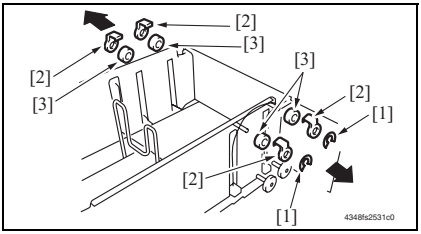

8. Remove two C-clips [1].
9. Remove four pulley covers [2].
10. Unhook four pulleys [3].

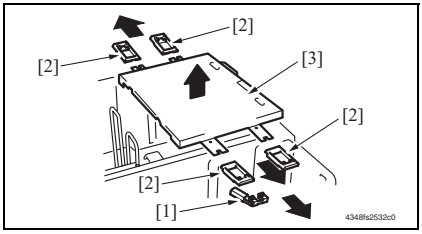

11. Remove the ground plate [1].
12. Remove four cable holding jigs [2] and remove the main drawer [3].

NOTE

- **Use care not to bend the wires.**

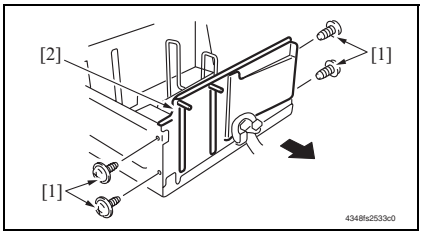

13. Remove four screws [1] and remove the rear trailing edge assy [2].

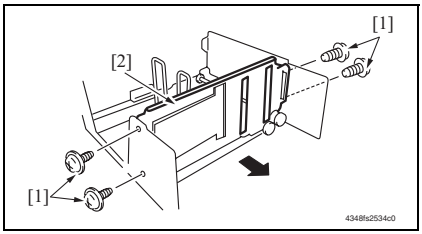

14. Remove four screws [1] and remove the front trailing edge assy [2].

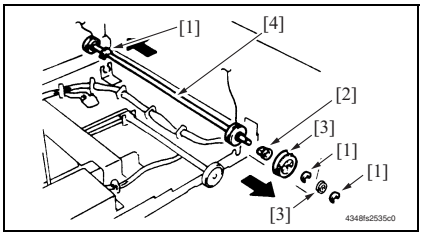

15. Remove three C-rings [1], the bushing [2], and two gears [3].
16. Remove the feed drum assy [4].

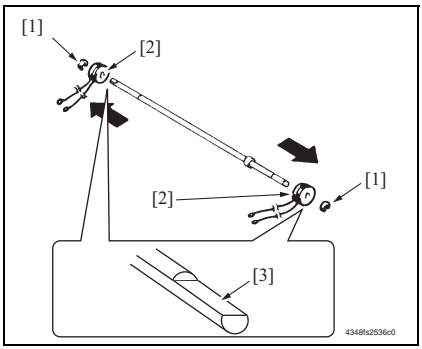

17. Remove two C-rings [1] and the feed drum [2].

NOTE

- **Take care not to lose fixing pins.**
- **When reinstalling the feed drum, check that the direction of the wire coming from both feed drums are the same.**
- **Install so that cut parts [3] at both ends of shaft face up.**

3.4 Cleaning procedure

NOTE

- **The alcohol described in the cleaning procedure represents the isopropyl alcohol.**

3.4.1 Separation roller

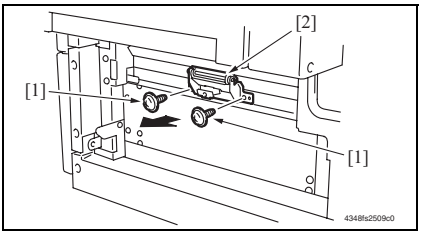

1. Remove the right door.
See P.10
2. Remove two screws [1] and remove the separation roller mounting bracket assy [2].

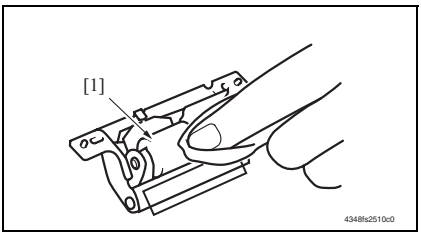

3. Using a soft cloth dampened with alcohol, wipe the separation roller [1] clean of dirt.

3.4.2 Feed roller

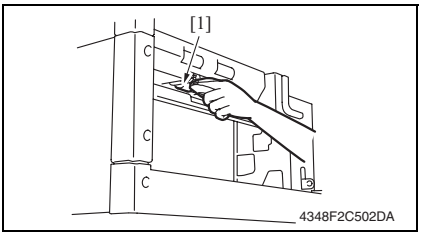

1. Remove the tray3.
2. Remove the separation roller mounting bracket assy.
See the procedures 1 to 2 in P.14 “Cleaning of separation roller.”
3. Using a soft cloth dampened with alcohol, wipe the feed roller [1] clean of dirt.

3.4.3 Pick-up roller

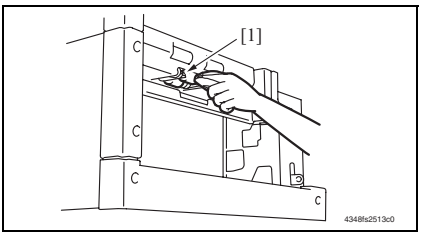

1. Remove the tray3.
2. Remove the separation roller mounting bracket assy.
See the procedures 1 to 2 in P.14 “Cleaning of separation roller.”
3. Using a soft cloth dampened with alcohol, wipe the pick-up roller [1] clean of dirt.

3.4.4 Vertical transport roller

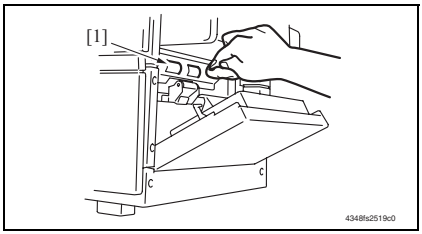

1. Open the right door.
2. Using a soft cloth dampened with alcohol, wipe the vertical transport roller [1] clean of dirt.

Blank Page

Adjustment/Setting

4. How to use the adjustment section

- “Adjustment/Setting” contains detailed information on the adjustment items and procedures for this machine.
- Throughout this “Adjustment/Setting,” the default settings are indicated by “ ”.

Advance checks

Before attempting to solve the customer problem, the following advance checks must be made. Check to see if:

- The power supply voltage meets the specifications.
- The power supply is properly grounded.
- The machine shares the power supply with any other machine that draws large current intermittently (e.g., elevator and air conditioner that generate electric noise).
- The installation site is environmentally appropriate: high temperature, high humidity, direct sunlight, ventilation, etc.; levelness of the installation site.
- The original has a problem that may cause a defective image.
- The density is properly selected.
- The original glass, slit glass, or related part is dirty.
- Correct paper is being used for printing.
- The units, parts, and supplies used for printing (developer, PC drum, etc.) are properly replenished and replaced when they reach the end of their useful service life.
- Toner is not running out.

⚠ CAUTION

- **Be sure to unplug the power cord of the machine before starting the service job procedures.**
- **If it is unavoidably necessary to service the machine with its power turned ON, use utmost care not to be caught in the scanner cables or gears of the exposure unit.**
- **Special care should be used when handling the fusing unit which can be extremely hot.**
- **The developing unit has a strong magnetic field. Keep watches and measuring instruments away from it.**
- **Take care not to damage the PC drum with a tool or similar device.**
- **Do not touch IC pins with bare hands.**

5. Sensor check

5.1 Check procedure

- To allow sensors to be checked for operation easily and safely, data applied to the IC on the board can be checked on the panel with the main unit in the standby state (including a misfeed, malfunction, and closure failure condition).

A. Procedure

1. Call the Service Mode to the screen.

See P.304 of the main unit service manual.

2. Touch [State Confirmation].

3. Touch [Sensor Check].

4. Touch [2].

5.2 Sensor check list

5.2.1 Sensor check screen

- This is only typical screen which may be different from what are shown on each individual main unit.

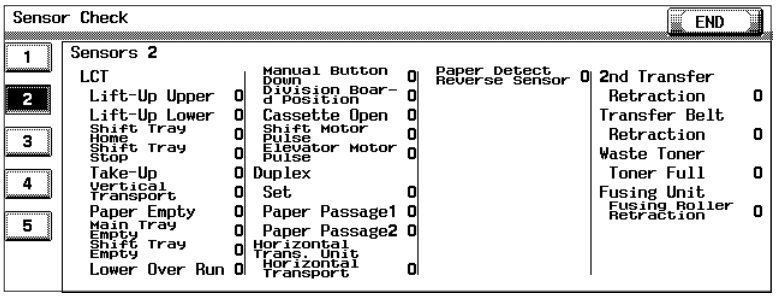

4061F3E813DA

5.2.2 Sensor check list

A. Sensor monitor 2

Symbol	Panel display	Part/Signal name	Operation characteristics/ panel display	
			1	0
PC4-LCT	Lift-Up Upper	Lift-up upper sensor	Raised Position	Not raised
PC13-LCT	Lift-Up Lower	Lift-up lower sensor	Lowered Position	Not lowered
PC12-LCT	Shift Tray Home	Shift tray home sensor	At home	Not at home
PC11-LCT	Shift Tray Stop	Shift tray stop sensor	Return position	Not at return position
PC1-LCT	Take-Up	Take-up sensor	Paper present	Paper not present
PC2-LCT	Vertical Transport	Vertical transport sensor	Paper present	Paper not present
PC3-LCT	Paper Empty	Paper empty sensor	Paper present	Paper not present
PWB-E LCT	Main Tray Empty	Main tray empty sensor board	Paper present	Paper not present
PC9-LCT	Shift Tray Empty	Shift tray empty sensor	Paper present	Paper not present
PC7-LCT	Lower Over Run	Lower over run sensor	malfunction	operational
UN1-LCT	Manual Button Down	Manual button down board	ON	OFF
PC14-LCT	Division Board Position	Division board position sensor	At home	Not at home
PC6-LCT	Cassette Open	Cassette open sensor	Set	Out of position
PC8-LCT	Shift Motor Pulse	Shift motor pulse sensor	Blocked	Unblocked
PC10-LCT	Elevator Motor Pulse	Elevator motor pulse sensor	Blocked	Unblocked

6. Mechanical adjustment

6.1 Adjusting the paper reference position

NOTE

- **Make this adjustment after any of the following procedures has been performed.**
  When the PH unit has been replaced.
  When the image on the print is offset in the sub scan direction.
  When a faint image occurs on the leading edge of the image.

6.1.1 Print Positioning: Side Edge

1. Call the Service Mode to the screen.

See P.304 of the main unit service manual.

2. Touch [Machine] → [Printer Area].
3. Touch [Print Positioning: Side Edge] → [3rd.].

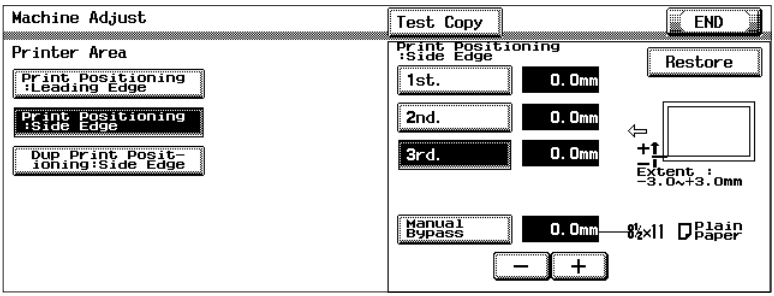

4. Press the Start key to let the machine produce a test print.

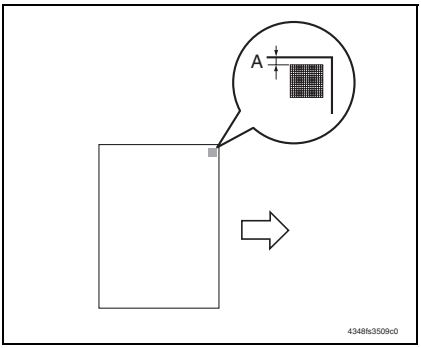

5. Measure the width of printed reference line A.
   Specification: 3.0 mm ± 1.0 mm
6. If the measured width A falls outside the specified range, enter the correction value using the [-] or [+] key.
7. Produce another test print and check to see if width A falls within the specified range.

NOTE

- **If the use of the [-] or [+] key does not allow the measurement to fall within the specified range, perform the following steps.**

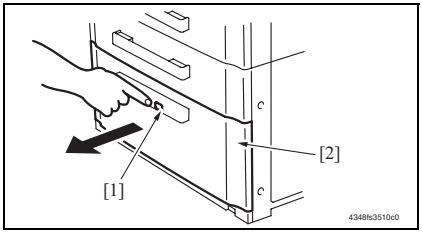

8. Press the drawer release button [1] and then slide out the drawer [2] from the paper feed cabinet.

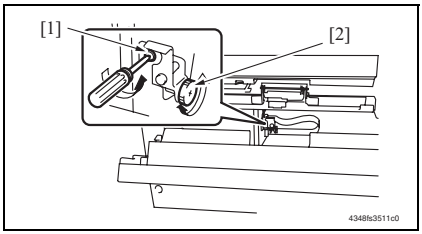

9. Open the right door.
10. Loosen the adjustment screw [1] and turn screw D [2] to make the adjustment.

NOTE

- **Do not damage the passage surface of the right door.**

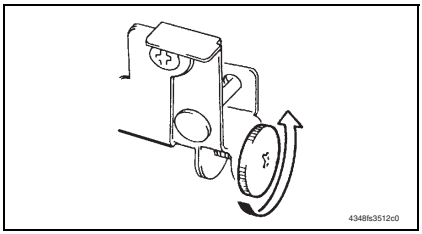

- If width A is greater than the specified value:
  Turn screw D counterclockwise.

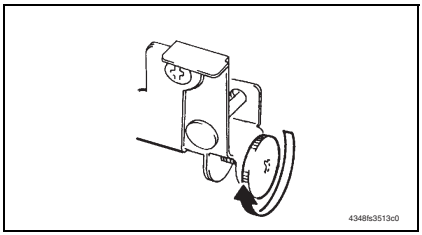

- If width A is smaller than the specified value:
  Turn screw D clockwise.

11. Perform another test print and check the reference deviation.
12. Repeat the adjustment until the reference line falls within the specified range.
13. Tighten the adjustment screw.
14. Touch [END].
15. Touch [Exit] on the Service Mode screen.
16. Turn OFF the main power switch. then, wait for 10 sec. or more and turn ON the main power switch.

6.1.2 Dup Print Positioning: Side Edge

1. Call the Service Mode to the screen.

See P.304 of the main unit service manual.

2. Touch [Machine] → [Printer Area].
3. Touch [Dup Print Positioning: Side Edge] → [3rd.].

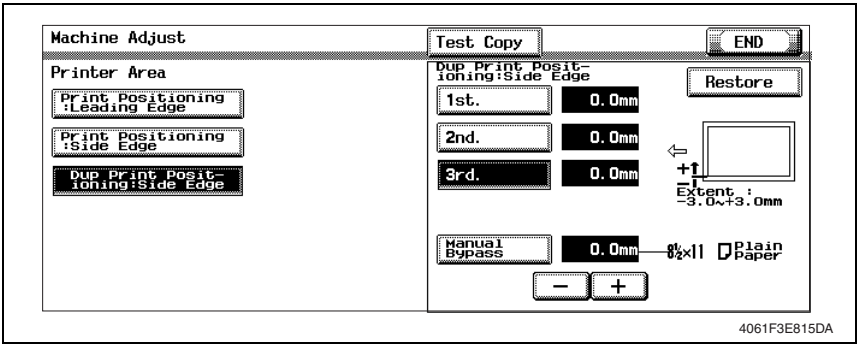

4. Press the Start key to let the machine produce a test print.

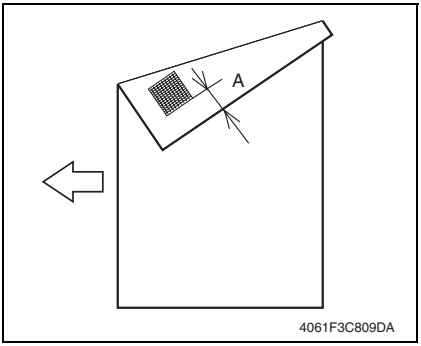

5. Measure the width of printed reference line A.
   Specification: 3.0 mm ± 2.0 mm
6. If the measured width A falls outside the specified range, enter the correction value using the [-] or [+] key.
7. Produce another test print and check to see if width A falls within the specified range.
8. Touch [END].
9. Touch [Exit] on the Service Mode screen.
10. Turn OFF the main power switch. then, wait for 10 sec. or more and turn ON the main power switch.

6.2 Shifter movement timing belt adjustment

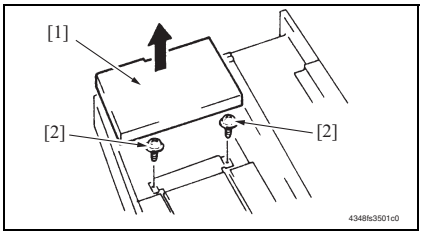

1. Slide out the drawer and remove it.
2. Lift the main drawer [1], and remove two screws [2] fixing the shift tray.

NOTE

- **When reinstalling, use caution because the wire of the main drawer comes off easily.**

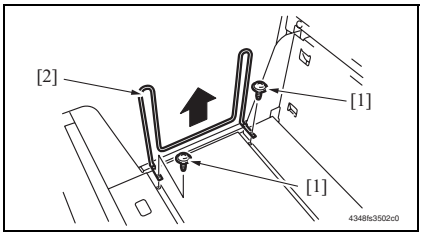

3. Remove two screws [1] and remove the shifter [2].

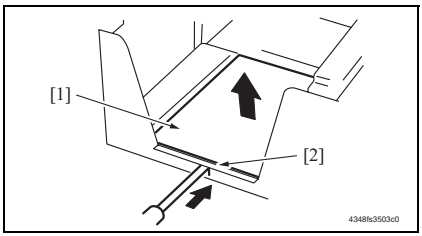

4. Push the tab [2] of the shift tray [1] as shown on the left and release the lock.
5. Remove the shift tray [1].

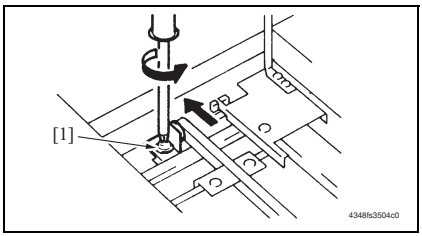

6. Loosen the screw [1] fixing the tension pulley assy as shown to the left and move it in the direction of the arrow.
7. After moving the shifter, tighten the fixing screw [1].

Blank Page

Troubleshooting

7. Jam display

7.1 Misfeed display

- When misfeed occurs, message, misfeed location “Blinking” and paper location “Lighting” are displayed on the touch panel of the main unit.

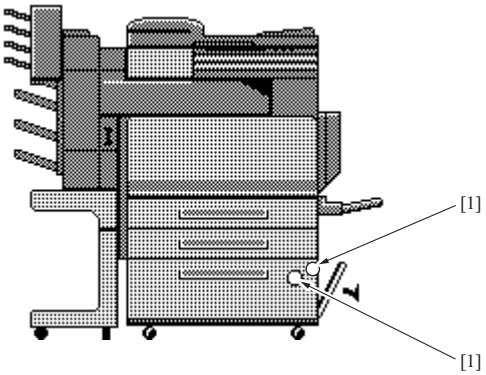

4061F4C805DA

No.	Code	Misfeed location	Misfeed access location	Action
[1]	1501	LCT paper feed section	Right door	P.28
	2001	LCT paper vertical transport section		

7.1.1 Misfeed display resetting procedure

- Open the corresponding door, clear the sheet of paper misfed, and close the door.

7.2 Sensor layout

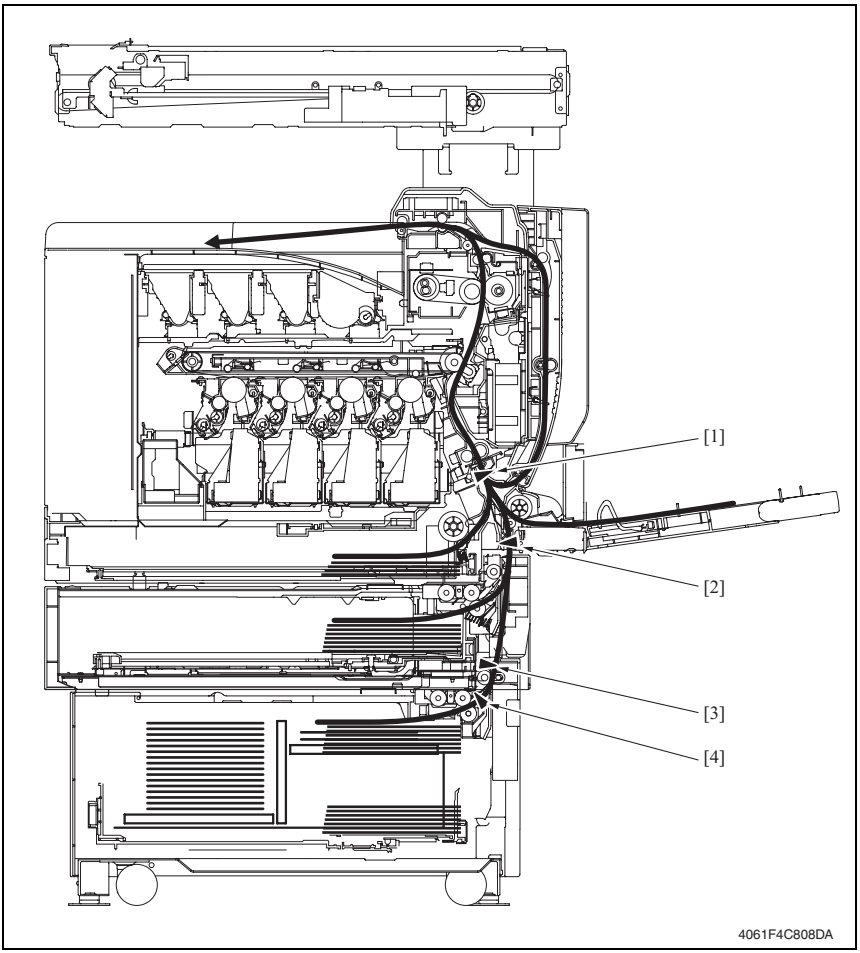

[1]	Registration roller sensor	PC1	[3]	Vertical transport sensor	PC2-LCT
[2]	Tray2 vertical transport	PC8-PC	[4]	Take-up sensor	PC1-LCT

7.3 Solution

7.3.1 Initial check items

- When a paper misfeed occurs, first perform the following initial check items.

Check item	Action
Does paper meet product specifications?	Replace paper.
Is the paper curled, wavy, or damp?	Replace paper. Instruct the user on the correct paper storage procedures.
Is a foreign object present along the paper path, or is the paper path deformed or worn?	Clean the paper path and replace if necessary.
Are the paper separator fingers dirty, deformed, or worn?	Clean or replace the defective paper separator finger.
Are rolls/rollers dirty, deformed, or worn?	Clean or replace the defective roll/roller.
Are the edge guide and trailing edge stop at the correct position to accommodate the paper?	Set as necessary.
Are the actuators operating correctly?	Correct or replace the defective actuator.

7.3.2 LCT paper feed section/vertical transport section misfeed

A. Detection timing

Type	Description
LCT paper feed section misfeed detection	The leading edge of the paper does not block the take-up sensor (PC1-LCT) or the vertical transport sensor (PC2-LCT) even after the set period of time has elapsed after the take-up motor (M1-LCT) is energized.
LCT vertical transport section misfeed detection	The tray 2 vertical transport sensor (PC8-PC) is not blocked even after the lapse of a given period of time after the vertical transport sensor (PC2-LCT) has been blocked by a paper.
LCT vertical transport section loop registration reversing jam	Rise timing of load for registration is earlier than the one for making the loop at front of the registration roller at LCT take-up.
LCT detection of paper remaining	The vertical transport sensor (PC2-LCT) is blocked when the main power switch is set to ON, a door or cover is opened and closed, or a misfeed or malfunction is reset.
	The take-up sensor (PC1-LCT) is blocked when the main power switch is set to ON, a door or cover is opened and closed, or a misfeed or malfunction is reset.
Misfeed detected as a result of delayed deactivation of sensor	The take-up sensor (PC1-LCT) is not unblocked even after the lapse of a given period of time after PC1-LCT has been blocked by a paper.
	The vertical transport sensor (PC2-LCT) is not unblocked even after the lapse of a given period of time after PC2-LCT has been blocked by a paper.

B. Action

Relevant electrical parts	
Take-up sensor (PC1-LCT) Vertical transport sensor (PC2-LCT) Tray 2 vertical transport sensor (PC8-PC) Take-up motor (M1-LCT) Registration roller sensor (PC1)	Control board (PWB-C1 LCT) Mechanical control board (MFPB)

Step	Action	WIRING DIAGRAM	
		Control signal	Location (Electrical components)
1	Initial check items	—	—
2	PC1 I/O, sensor check	—	—
3	PC1-LCT I/O, sensor check	PWB-C1 LCT PJ5C1 LCT-2 (ON)	PC-403 E-10
4	PC2-LCT I/O, sensor check	PWB-C1 LCT PJ5C1 LCT-5 (ON)	PC-403 E-10
5	PC8-PC I/O, sensor check	PCCB PJ6PCCB-11 (ON)	bizhub C300/C352 S-25
6	M1-LCT operation check	PWB-C1 LCT PJ6C1 LCT-1 to 4	PC-403 E-11
7	PWB-C1 LCT replacement	—	—
8	MFPB replacement	—	—

8. Trouble code

8.1 Trouble code display

- The main unit's CPU performs a self-diagnostics function that, on detecting a malfunction, gives the corresponding malfunction code on the touch panel.

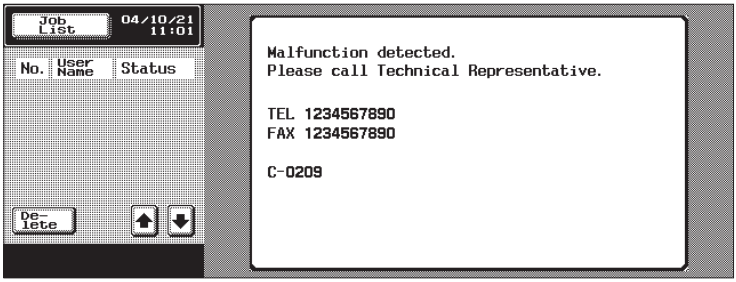

4061F4E704DA

8.2 Trouble code list

Code	Item	Description
C0001	LCT communication error	• Due to a software malfunction, etc., the time on the watchdog timer has run out and a reset is performed.
C0102	LCT vertical transport motor malfunction	• The lock signal remains high for a predetermined continuous period of time while the LCT vertical transport motor is turning.
C0209	LCT elevator motor failure	• The elevator motor pulse sensor (PC10-LCT) cannot detect both edges of H/L even after the set period of time has elapsed while the elevator motor (M5-LCT) is turning backward/forward (raise/lower).
C0210	LCT lift failure	• The lift-up upper sensor (PC4-LCT) is not blocked even after the set period of time has elapsed after the paper lift-up operation began. • The lift-up upper sensor (PC4-LCT) is not blocked even after the set pulse is detected by the elevator motor pulse sensor (PC10-LCT) after the paper lift-up operation began. • The lift-up lower sensor (PC13-LCT) is not unblocked even after the set pulse is detected by the elevator motor pulse sensor (PC10-LCT) after the paper lift-up operation began. • The lift-up upper sensor (PC4-LCT) is not blocked even after the set period of time has elapsed after the paper lift-up operating. • The lift-up lower sensor (PC13-LCT) is not blocked even after the set period of time has elapsed after the paper lift-down operation began. • The lift-up lower sensor (PC13-LCT) is not blocked even after the set pulse is detected by the elevator motor pulse sensor (PC10-LCT) after the paper lift-down operation began. • The lift-up upper sensor (PC4-LCT) is not unblocked even after the set pulse is detected by the elevator motor pulse sensor (PC10-LCT) after the paper lift-down operation began. • The lower over run sensor (PC7-LCT) is blocked while the paper lift-down operating.
C0212	LCT ejection failure	• The drawer cannot be determined to be out of position even after the set period of time has elapsed after the tray lock solenoid (SL1-LCT) is energized after the lowering operation is finished.
C0213	LCT shift gate malfunction	• The division board position sensor (PC14-LCT) cannot be set to L even after the set period of time has elapsed after the operation of the division board motor (M3-LCT) began with the division board position sensor (PC14-LCT) set to L.

Code	Item	Description
C0214	LCT shifting failure	• The shift tray stop sensor (PC11-LCT) is not blocked even after the set period of time has elapsed after the shift operation began (shift to the right). • The shift tray stop sensor (PC11-LCT) is not blocked even after the set pulse is detected by the shift motor pulse sensor (PC8-LCT) after the shift operation began (shift to the right). • The shift tray home sensor (PC12-LCT) is not unblocked even after the set pulse is detected by the shift motor pulse sensor (PC8-LCT) after the shift operation began (shift to the right). • The shift tray home sensor (PC12-LCT) is not blocked even after the set period of time has elapsed after the return operation began (shift to the left). • The shift tray home sensor (PC12-LCT) is not blocked even after the set pulse is detected by the shift motor pulse sensor (PC8-LCT) after the return operation began (shift to the left). • The shift tray stop sensor (PC11-LCT) is not unblocked even after the set pulse is detected by the shift motor pulse sensor (PC8-LCT) after the return operation began (shift to the left).
C0215	LCT shift motor malfunction	• The shift motor pulse sensor (PC8-LCT) cannot detect both edges of H/L even after the set period of time has elapsed while the shift tray motor (M4-LCT) is turning backward/forward (raise/lower).

- Open and close the front door, or turn OFF the main power switch. Then, wait for 10 sec. or more and turn ON the main power switch to reset the malfunction display.

8.3 Solution

8.3.1 C0001: LCT communication error

Relevant electrical parts	
Control board (PWB-C1 LCT)	

Step	Action	WIRING DIAGRAM	
		Control signal	Location (Electrical components)
1	Turn OFF the main power switch, wait for 10 sec. or more, and turn ON the main power switch.	—	—
2	PWB-C1 LCT replacement	—	—

8.3.2 C0209: LCT elevator motor failure

Relevant electrical parts	
Elevator motor (M5-LCT) Elevator motor pulse sensor (PC10-LCT)	Interface board (PWB-H LCT) Control board (PWB-C1 LCT)

Step	Action	WIRING DIAGRAM	
		Control signal	Location (Electrical components)
1	Check the motor and sensor connectors for proper connection, and correct as necessary.	—	—
2	Check the connector of motor for proper drive coupling, and correct as necessary.	—	—
3	PC10-LCT I/O, sensor check	PWB-H LCT PJ2H<A> LCT-5 (ON)	PC-403 J-6
4	M5-LCT operation check	PWB-H LCT PJ2H<B> LCT-6 to 7	PC-403 J-8
5	PWB-H LCT replacement	—	—
6	PWB-C1 LCT replacement	—	—

8.3.3 C0210: LCT lift failure

Relevant electrical parts	
Lift-up upper sensor (PC4-LCT) Lift-up lower sensor (PC13-LCT) Elevator motor pulse sensor (PC10-LCT) Lower over run sensor (PC7-LCT)	Control board (PWB-C1 LCT)

Step	Action	WIRING DIAGRAM	
		Control signal	Location (Electrical components)
1	Check the sensor connectors for proper connection, and correct as necessary.	—	—
2	PC4-LCT I/O, sensor check	PWB-C1 LCT PJ5C1 LCT-12 (ON)	PC-403 E-9
3	PC13-LCT I/O, sensor check	PWB-H LCT PJ2H<A> LCT-9 (ON)	PC-403 J-4
4	PC10-LCT I/O, sensor check	PWB-H LCT PJ2H<A> LCT-5 (ON)	PC-403 J-6
5	PC7-LCT I/O, sensor check	PWB-H LCT PJ2H<A> LCT-2 (ON)	PC-403 J-7
6	PWB-C1 LCT replacement	—	—

8.3.4 C0212: LCT Lock release failure

Relevant electrical parts	
Tray lock solenoid (SL1-LCT)	Control board (PWB-C1 LCT)

Step	Action	WIRING DIAGRAM	
		Control signal	Location (Electrical components)
1	Check the SL1-LCT connector for proper connection, and correct as necessary.	—	—
2	SL1-LCT operation check	PWB-C1 LCT PJ7C1 LCT-4 (ON)	PC-403 E-11
3	PWB-C1 LCT replacement	—	—

8.3.5 C0213: LCT shift gate operation failure

Relevant electrical parts	
Division board position sensor (PC14-LCT) Division board motor (M3-LCT)	Control board (PWB-C1 LCT)

Step	Action	WIRING DIAGRAM	
		Control signal	Location (Electrical components)
1	Check the motor and sensor connectors for proper connection, and correct as necessary.	—	—
2	Check the connector of motor for proper drive coupling, and correct as necessary.	—	—
3	PC14-LCT I/O, sensor check	PWB-H LCT PJ2H<B> LCT-1 (ON)	PC-403 J-8 to 9
4	M3-LCT operation check	PWB-H LCT PJ2H<B> LCT-2 to 3	PC-403 J-8
5	PWB-C1 LCT replacement	—	—

8.3.6 C0214: LCT shift failure

Relevant electrical parts	
Shift motor pulse sensor (PC8-LCT) Shift tray stop sensor (PC11-LCT) Shift tray home sensor (PC12-LCT)	Control board (PWB-C1 LCT)

Step	Action	WIRING DIAGRAM	
		Control signal	Location (Electrical components)
1	Check the sensor connectors for proper connection, and correct as necessary.	—	—
2	PC8-LCT I/O, sensor check	PWB-H LCT PJ2H<A> LCT-3 (ON)	PC-403 J-7
3	PC11-LCT I/O, sensor check	PWB-H LCT PJ2H<A> LCT-7 (ON)	PC-403 J-5
4	PC12-LCT I/O, sensor check	PWB-H LCT PJ2H<A> LCT-8 (ON)	PC-403 J-5
5	PWB-C1 LCT replacement	—	—

8.3.7 C0215: LCT shift motor failure

Relevant electrical parts	
Shift tray motor (M4-LCT) Shift motor pulse sensor (PC8-LCT)	Control board (PWB-C1 LCT)

Step	Action	WIRING DIAGRAM	
		Control signal	Location (Electrical components)
1	Check the motor and sensor connectors for proper connection, and correct as necessary.	—	—
2	Check the connector of motor for proper drive coupling, and correct as neces-sary.	—	—
3	PC8-LCT I/O, sensor check	PWB-H LCT PJ2H<A> LCT-3 (ON)	PC-403 J-7
4	M4-LCT operation check	PWB-H LCT PJ2H<B> LCT-4 to 5	PC-403 J-8
5	PWB-C1 LCT replacement	—	—

Blank Page

KONICA MINOLTA

SERVICE MANUAL

FIELD SERVICE

FS-514/PK-510 /OT-601

2006.03

KONICA MINOLTA BUSINESS TECHNOLOGIES, INC. Ver. 1.0

Revision history

After publication of this service manual, the parts and mechanism may be subject to change for improvement of their performance.
Therefore, the descriptions given in this service manual may not coincide with the actual machine.

When any change has been made to the descriptions in the service manual, a revised version will be issued with a revision mark added as required.

Revision mark:

- To indicate clearly a section revised, show △1 to the left of the revised section.
  A number within △1 represents the number of times the revision has been made.

- To indicate clearly a section revised, show ▲1 in the lower outside section of the corresponding page.
  A number within ▲1 represents the number of times the revision has been made.

NOTE

Revision marks shown in a page are restricted only to the latest ones with the old ones deleted.

- When a page revised in Ver. 2.0 has been changed in Ver. 3.0:
  The revision marks for Ver. 3.0 only are shown with those for Ver. 2.0 deleted.
- When a page revised in Ver. 2.0 has not been changed in Ver. 3.0:
  The revision marks for Ver. 2.0 are left as they are.

2006/03	1.0	—	Issue of the first edition
Date	Service manual Ver.	Revision mark	Descriptions of revision

CONTENTS

FS-514/PK-510/OT-601

General

1. Product specifications 1
1.1 FS-514 1
1.2 PK-510 4
1.3 OT-601 5

Maintenance

2. Periodical check 7
2.1 Maintenance procedure (Periodical check parts) 7
2.1.1 Cleaning of the roller and roll 7
2.1.2 Cleaning of the paddle 9
3. Other 10
3.1 Disassembly/Adjustment prohibited items 10
3.2 Precautions to be observed when option configuration is changed 11
3.2.1 Setting the exit tray detection position 11
3.3 Disassembly/Assembly/Cleaning list (Other parts) 12
3.3.1 Disassembly/Assembly parts list 12
3.4 Disassembly/Assembly procedure 13
3.4.1 Finisher unit right front cover 13
3.4.2 Finisher unit left front cover 13
3.4.3 Finisher unit rear cover 13
3.4.4 Finisher unit upper cover 14
3.4.5 Front door 14
3.4.6 Middle guide 15
3.4.7 Intake cover 16
3.4.8 Tray unit front cover/Tray unit rear cover/Connector cover 16
3.4.9 Tray 1/Tray 2 17
3.4.10 Output tray (OT-601): Option 17
3.4.11 Tray unit 18
3.4.12 Finisher unit 21
3.4.13 Height and angle adjustment of stand table 21
3.4.14 Stapler unit 23
3.4.15 Punch kit (PK-510): Option 24

3.4.16 Exit roller motor/Storage paddle drive clutch/Exit upper roller/ Storage paddle 25
3.4.17 Exit paddle drive clutch/Exit lower roller 30
3.4.18 Aligning section 33
3.4.19 Elevator motor/Timing belt 36
3.4.20 Shutter drive gear 41
3.4.21 Duplex guide solenoid 42
3.4.22 FS control board 44

Adjustment/Setting

4. How to use the adjustment section 45
5. Sensor Check 46
5.1 Check procedure 46
6. Finisher operations 48
6.1 Entering Finisher 48
6.2 Finisher Check 49
6.3 Punch hole position adjustment (PK-510) 51
6.4 Punch loop length adjustment (PK-510) 53
7. Mechanical adjustment 54
7.1 Punch hole deviance adjustment (PK-510) 54
7.2 Staple position adjustment 55
7.3 Staple home position sensor position adjustment 57
7.4 Adjustment of clearance between stapler and FD stopper 58

Troubleshooting

8. Jam display 59
8.1 Misfeed display 59
8.1.1 Misfeed display resetting procedure 59
8.2 Sensor layout 60
8.3 Solution 61
8.3.1 Initial check items 61
8.3.2 Solution when paper curl occurs 61
8.3.3 Transport section misfeed 62
8.3.4 Exit section misfeed 63
8.3.5 Finisher bundle exit misfeed 63
8.3.6 Finisher staple misfeed 64
8.3.7 Finisher punch misfeed (PK-510) 64
9. Malfunction code 65
9.1 Trouble code 65

9.2 Solution 67
9.2.1 C1183: Elevator motor ascent/descent drive failure 67
9.2.2 C1190: Aligning plate 1 drive failure 68
9.2.3 C1191: Aligning plate 2 drive failure 68
9.2.4 C11A0: Paper holding drive failure 69
9.2.5 C11A1: Exit roller pressure/retraction failure 69
9.2.6 C11A3: Shutter drive failure 70
9.2.7 C11B0: Staple unit CD drive failure 70
9.2.8 C11B2: Staple drive failure 71
9.2.9 C11C0: Punch cam motor unit failure 71
9.2.10 C1301: Finishing option cooling fan motor failure 72
9.2.11 CC155: Finishing option flash ROM failure 72

Blank Page

General

1. Product specifications

1.1 FS-514

A. Type

Name	Multi staple finisher built into the copier
Installation	Installed in the copier
Document alignment	Center
Consumables	Staples

B. Functions

Modes	Sort, group, sort offset, group offset, sort stable, and punch (when PK-510 is mounted)

C. Paper type

(1) Non sort/sort/group

<table>
<tr><th>Type</th><th>Size</th><th>Weight</th><th colspan="3">Max. capacity</th></tr>
<tr><td rowspan="3">Plain paper
Recycled paper</td><td rowspan="13">A6S, A5S/A5, B5S/B5, B6S, A4S/A4, B4, A3, A3Wide
5 1/2 x 8 1/2S/5 1/2 x 8 1/2, 8 1/2 x 11S/8 1/2 x 11, 8 1/2 x 14, 11 x 17, 12 1/4 x 18

Max.
311.15 mm x 457.2 mm
12.25 x 18 inch
Min.
90 mm x 139.7 mm
3.5 x 5.5 inch</td><td rowspan="3">50 to 90 g/m²
13.25 to 24 lb</td><td>Exit tray1</td><td colspan="2">200 sheets</td></tr>
<tr><td rowspan="2">Exit tray2</td><td>A4S, 8 1/2 x 11S or less</td><td>1000 sheets</td></tr>
<tr><td>B4, 8 1/2 x 14 or greater</td><td>500 sheets</td></tr>
<tr><td>Government standard postcards</td><td>91 to 210 g/m²
24.25 to 55.75 lb</td><td colspan="3" rowspan="10">20 sheets</td></tr>
<tr><td>Envelope</td><td>-</td></tr>
<tr><td>OHP trans-parencies</td><td>-</td></tr>
<tr><td>Translucent paper</td><td>-</td></tr>
<tr><td>Label</td><td>-</td></tr>
<tr><td>Letterhead</td><td>-</td></tr>
<tr><td>Thick paper 1</td><td>91 to 150 g/m²
24.25 to 40 lb</td></tr>
<tr><td>Thick paper 2</td><td>151 to 209 g/m²
40 to 55.5 lb</td></tr>
<tr><td>Thick paper 3</td><td>210 to 256 g/m²
55.75 to 68 lb</td></tr>
<tr><td>Long size paper *</td><td>210 mm to 297 mm x 1200 mm or under</td><td>127 to 160 g/m²
33.75 to 42.5 lb</td><td colspan="3">-</td></tr>
</table>

*: Long size paper is available only for non-sort mode.

(2) Sort offset/group offset

Type	Size	Weight	Max. capacity		
Plain paper Recycled paper	A5, B5S/B5, A4S/A4, B4, A3 8 1/2 x 11S/8 1/2 x 11, 8 1/2 x 14, 11 x 17 Max. 297 mm x 431.8 mm 11.75 x 17 inch Min. 182 mm x 148.5 mm 7.25 x 5.75 inch	50 to 90 g/m² 13.25 to 24 lb	Exit tray1	200 sheets	
			Exit tray2	A4S, 8 1/2 x 11S or less	1000 sheets
				B4, 8 1/2 x 14 or greater	500 sheets
Thick paper		91 to 256 g/m² 24.25 to 68 lb	-		

(3) Sort staple

Type	Size	Weight	Max. capacity			No. of sheets to be stapled
Plain paper Recycled paper	A5, B5S/B5, A4S/A4, B4, A3 8 1/2 x 11S/8 1/2 x 11, 8 1/2 x 14, 11 x 17 Max. 297 mm x 431.8 mm 11.75 x 17 inch Min. 182 mm x 148.5 mm 7.25 x 5.75 inch	50 to 90 g/m² 13.25 to 24 lb	Exit tray1	200 sheets		50 sheets*
			Exit tray2	A4S, 8 1/2 x 11S or less	1000 sheets	
				B4, 8 1/2 x 14 or greater	500 sheets	
Thick paper		91 to 120 g/m² 24.25 to 32 lb	-			30 sheets

*: The number of sheets to be stapled is limited for high-density images.
(Color wise: 20 sheets x 20 sets)

(4) Punch

Type	Size	Weight	Punched holes	Exit tray
Plain paper Recycled paper	B5S/B5 to A3 8 1/2 x 11S/8 1/2 x 11 to 11 x 17	50 to 209 g/m² 13.25 to 55.5 lb	2, 3, 4 *	Exit Tray1 Exit Tray2 OT-601 MT-501

*: The punched holes is different because of the difference of area.

D. Stapling

Staple filling mode	Dedicated staple cartridge (5000 staples)	
Staple detection	Available (Nearly Empty: 20 remaining staples)	
Stapling position	Back of the corner (30 degree)	A4, A3, B5, B4 8 $^1/_2$ x 11, 11 x 17
	Front of the corner (30 degree)	
	Back of the corner (Parallel)	A4S, B5S, A5 8 $^1/_2$ x 11S, 8 $^1/_2$ x 14
	Front of the corner (Parallel)	
	Side: Parallel 2 point	A4S/A4, A3, B5S/B5, B4, A5 8 $^1/_2$ x 11S/8 $^1/_2$ x 11, 8 $^1/_2$ x 14, 11 x 17
Manual staple	None	

E. Hole Punch

No. of holes	Metric: 4 holes, Inch: 2 holes/3 holes, Sweden: 4 holes
Punch dust full detection	Available

F. Machine specifications

Power requirements	DC 24 V (supplied from the main unit)
	DC 5.1 V (generated by finisher)
Max. power consumption	66 W or less
Dimensions	352 mm (W) x 558 mm (D) x 573 mm (H) 13.75 inch (W) x 22 inch (D) x 22.5 inch (H)
Weight	33.2 kg (73.25 lb)

G. Operating environment

- Conforms to the operating environment of the main unit.

1.2 PK-510

A. Type

Name	Punch kit PK-510	
Installation	Built into the finisher	
Paper size	Metric	B5S, A4, B4, A3
	Inch (2 holes)	8 $^1/_2$ x 11S/8 $^1/_2$ x 11, 8 $^1/_2$ x 14, 11 x 17
	Inch (3 holes)	8 $^1/_2$ x 11, 11 x 17
	Sweden	B5S, A4, B4, A3
Paper type	Plain Paper, Recycled paper (50 to 209 g/m^2, 13.25 to 55.5 lb)	
Punch hole	Metric: 2 holes, 4 holes, Inch: 2/3 hole, Sweden: 4 holes	
Number of stored punch wastes	Metric (2 holes): For 2,500 sheets of paper (64 g/m^2) Metric (4 holes): For 1,500 sheets of paper (80 g/m^2) Inch (2/3 holes): For 1,000 sheets of paper (75 g/m^2) Sweden (4 holes): For 1,500 sheets of paper (80 g/m^2)	
Document alignment	Center	

B. Machine specifications

Power requirements	Supplied by the finisher
Dimensions	114 mm (W) x 461 mm (D) x 106 mm (H) 4.5 inch (W) x 18.25 inch (D) x 4.25 inch (H)
Weight	Approx. 1.9 kg (4.25 lb) or less

C. Operating environment

- Conforms to the operating environment of the main unit.

1.3 OT-601

A. Type

Name	Output tray OT-601
Installation	Fixed to the finisher
Mode	Sort, group, and sort stable Sort, group, sort offset, group offset, and sort stable
Number of bins	1 bin
Document alignment	Center

B. Paper type

Mode	Size	Type		Capacity
Sort/group	A6S, A5S/A5, B5S/B5, B6S, A4S/A4, B4, A3, A3Wide 5 1/2 x 8 1/2S/5 1/2 x 8 1/2, 8 1/2 x 11S/8 1/2 x 11, 8 1/2 x 14, 11 x 17 Max. 311.15 mm x 457.2 mm 12.25 x 18 inch Min. 90 mm x 139.7 mm 3.5 x 5.5 inch	Plain Paper	50 to 90 g/m², 13.25 to 24 lb	200 sheets (up to a height of 24 mm)
		Recycled paper		
		Special	Government standard postcards	
			Envelope	
			OHP transparencies	
			Translucent paper	
			Label	
			Letterhead	
		Thick paper 1	91 to 150 g/m² 24.25 to 40 lb	
		Thick paper 2	151 to 209 g/m² 40 to 55.5 lb	
		Thick paper 3	210 to 256 g/m² 55.75 to 68 lb	
Sort offset/ group off-set	A5, B5S/B5, A4S/A4, B4, A3 8 1/2 x 11S/8 1/2 x 11, 8 1/2 x 14, 11 x 17 Max. 297 mm x 431.8 mm 11.75 x 17 inch Min. 182 mm x 148.5 mm 7.25 x 5.75 inch	Plain Paper	50 to 90 g/m², 13.25 to 24 lb	200 sheets (up to a height of 24 mm)
		Recycled paper		
		Thick paper	91 to 256 g/m² 24.25 to 68 lb	
Sort stable		Plain Paper	50 to 90 g/m², 13.25 to 24 lb	200 sheets or 20 copies (up to a height of 24 mm)
		Recycled paper		
		Thick paper	91 to 256 g/m² 24.25 to 68 lb	

C. Machine specifications

Dimensions	282 mm (W) x 368 mm (D) x 57 mm (H) 11 inch (W) x 14.5 inch (D) x 2.25 inch (H)
Weight	0.7 kg (1.5 lb)

D. Operating environment

- Conforms to the operating environment of the main unit.

NOTE

How product names appear in the document

- FS-514: Finisher
- PK-510: Punch kit
- OT-601: Output tray

Maintenance

2. Periodical check

2.1 Maintenance procedure (Periodical check parts)

NOTE

- **The alcohol described in the cleaning procedure of maintenance represents the isopropyl alcohol.**

2.1.1 Cleaning of the roller and roll

1. Remove the tray unit.
See P.18
2. Remove the finisher unit.
See P.21
3. Remove the finisher unit upper cover.
See P.14

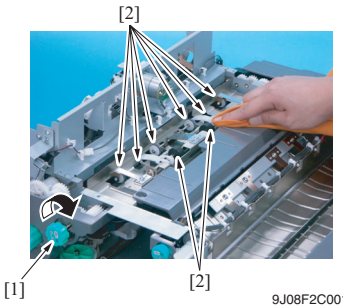

4. While turning processing knob FN5 [1], wipe the roller and roll [2] using a soft cloth dampened with alcohol.

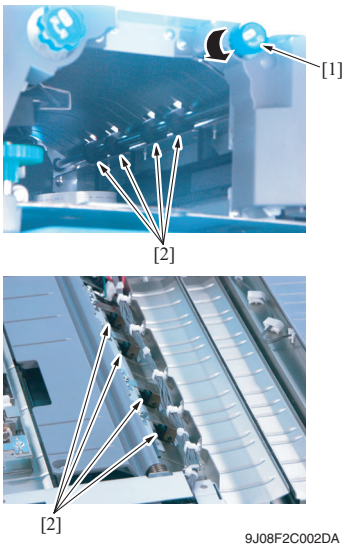

5. While turning processing knob FN4 [1], wipe the roller and roll [2] using a soft cloth dampened with alcohol.

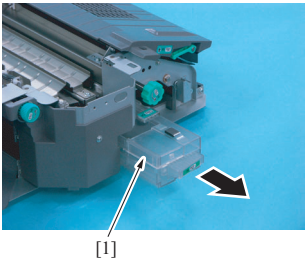

9J08F2C003DA

6. Remove punch waste storage box FN3.1 [1].
(only when PK-510 is installed)

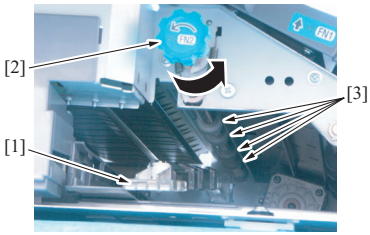

9J08F2C004DA

7. Lower processing guide FN3 [1].
8. While turning processing knob FN2 [2], wipe the roll [3] using a soft cloth dampened with alcohol.

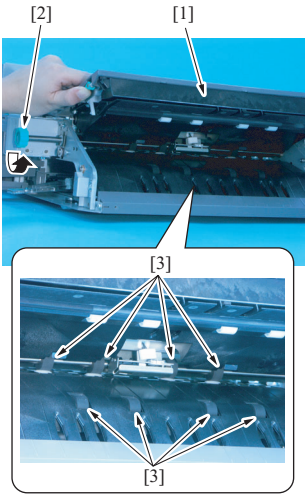

9J08F2C005DA

9. Upper processing guide FN1 [1].
10. While turning processing knob FN2 [2], wipe the roller [3] using a soft cloth dampened with alcohol.

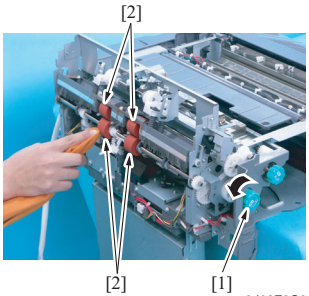

11. While turning processing knob FN6 [1], wipe the roller [2] using a soft cloth dampened with alcohol.

2.1.2 Cleaning of the paddle

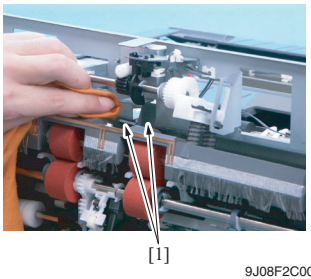

1. Remove the tray unit.
See P.18
2. Remove the finisher unit.
See P.21
3. Using a soft cloth dampened with alcohol, wipe the paddle 1 [1].

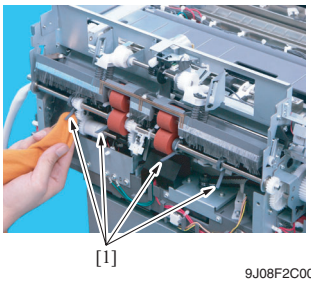

4. Using a soft cloth dampened with alcohol, wipe four paddles 2 [1].

3. Other

3.1 Disassembly/Adjustment prohibited items

A. Screws to which blue paint or green paint is applied

- **Blue paint or green paint is applied to some screws to prevent them from coming loose.**
- **As a general rule, screws to which blue paint or green paint is applied should not be removed or loosened.**

B. Red-painted screws

- **Do not remove or loosen any of the red-painted screws in the field. It should also be noted that, when two or more screws are used for a single part, only one representative screw may be marked with the red paint.**

C. Variable resistors on board

NOTE

- **Do not turn the variable resistors on boards for which no adjusting instructions are given in Adjustment/Setting.**

D. Removal of PWBs

⚠ **CAUTION**

- **When removing a circuit board or other electrical component, refer to "SAFETY AND IMPORTANT WARNING ITEMS" and follow the corresponding removal procedures.**
- **The removal procedures given in the following omit the removal of connectors and screws securing the circuit board support or circuit board.**
- **When it is absolutely necessary to touch the ICs and other electrical components on the board, be sure to ground your body.**

3.2 Precautions to be observed when option configuration is changed

- The exit tray detection position must be changed depending on configuration of the options mounted on the copier.

3.2.1 Setting the exit tray detection position

A. When only OT-601, MT-501, or SD-503 is mounted

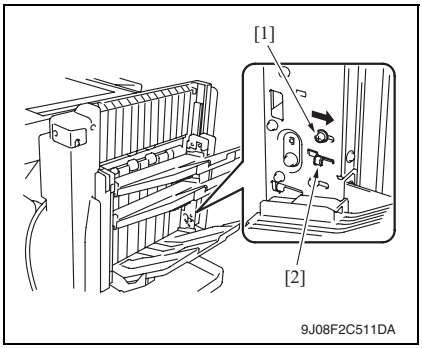

1. Loosen the screw [1] and move it in the direction of the arrow. Then, tighten it at the new position.

NOTE
- **This step should be done securely. If not, any trouble may happen.**
- **Be sure to move the screw itself.**
- **Do not move the screw by using the adjust plate [2].**

B. When OT-601 + MT-501 or OT-601 + SD-503 are mounted

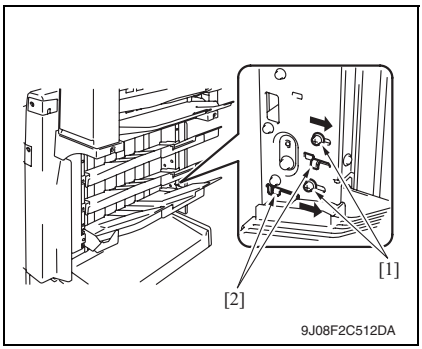

1. Loosen the two screws [1] and move them in the direction of the arrow. Then, tighten them at the corresponding new positions.

NOTE
- **This step should be done securely. If not, any trouble may happen.**
- **Be sure to move the screw itself.**
- **Do not move the screw by using the adjust plate [2].**

C. When only FS-514 is mounted

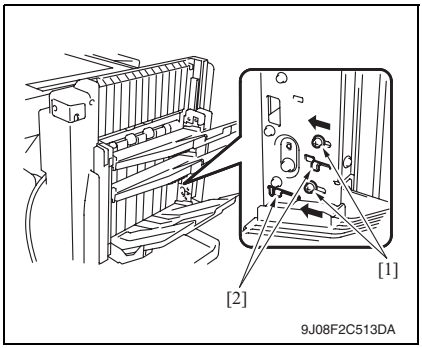

1. Loosen the two screws [1] and move them in the direction of the arrow. Then, tighten them at the corresponding new positions.

NOTE
- **This step should be done securely. If not, any trouble may happen.**
- **Be sure to move the screw itself.**
- **Do not move the screw by using the adjust plate [2].**

3.3 Disassembly/Assembly/Cleaning list (Other parts)

3.3.1 Disassembly/Assembly parts list

No.	Section	Part name	Ref. page
1	Exterior parts	Finisher unit right front cover	P.13
2		Finisher unit left front cover	P.13
3		Finisher unit rear cover	P.13
4		Finisher unit upper cover	P.14
5		Front door	P.14
6		Middle guide	P.15
7		Intake cover	P.16
8		Tray unit front cover	P.16
9		Tray unit rear cover	P.16
10		Connector cover	P.16
11		Tray 1	P.17
12		Tray 2	P.17
13		Output tray OT-601 (Option)	P.17
14	Unit	Tray unit	P.18
15		Finisher unit	P.21
16		Stapler unit	P.23
17		Punch kit PK-510 (Option)	P.24
18	Electric parts	Exit roller motor	P.25
19		Elevator motor	P.36
20		Duplex guide solenoid	P.42
21		FS control board	P.44
22	Others	Storage paddle drive clutch	P.25
23		Exit upper roller	P.25
24		Storage paddle	P.25
25		Exit paddle drive clutch	P.30
26		Exit lower roller	P.30
27		Aligning section	P.33
28		Timing belt	P.36
29		Shutter drive gear	P.41

3.4 Disassembly/Assembly procedure

3.4.1 Finisher unit right front cover

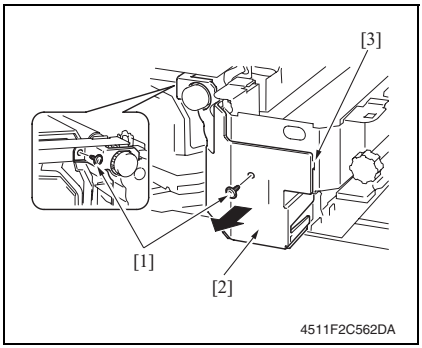

1. Open the front door.
2. Remove two screws [1] and remove the finisher unit right front cover [2].

NOTE

- **At reinstallation, first fit the tab [3] into position.**

3.4.2 Finisher unit left front cover

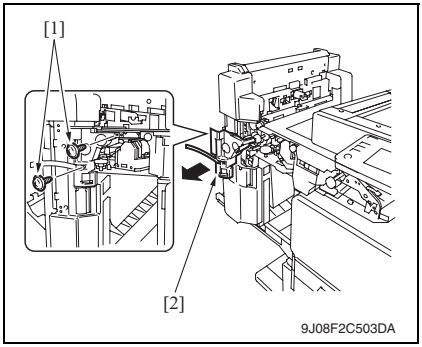

1. Remove the front door.
See P.14
2. Remove two screws [1] and remove the finisher unit left front cover [2].

3.4.3 Finisher unit rear cover

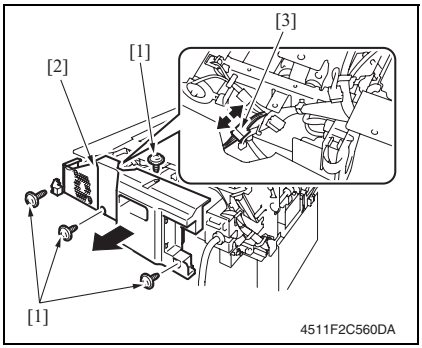

1. Remove the tray unit.
See P.18
2. Remove the finisher unit.
See P.21
3. Remove four screws [1] and remove the finisher unit rear cover [2].
4. Disconnect the connector [3].

3.4.4 Finisher unit upper cover

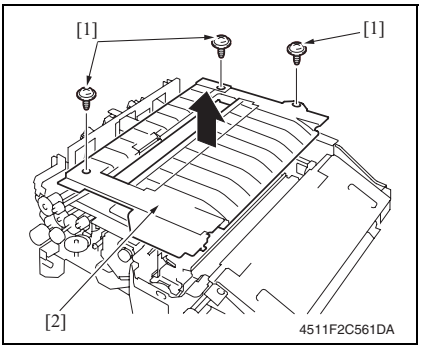

1. Remove the tray unit.
See P.18
2. Remove the finisher unit.
See P.21
3. Remove the finisher unit rear cover.
See P.13
4. Remove three screws [1] and remove the finisher unit upper cover [2].

3.4.5 Front door

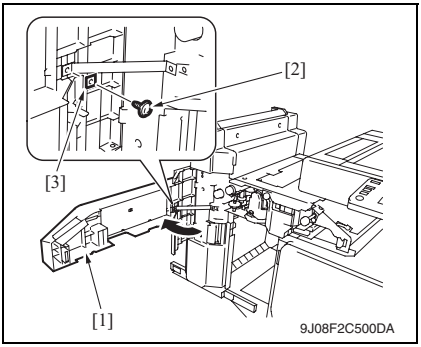

1. Open the front door [1].
2. Remove the screw [2] and the retaining plate [3].

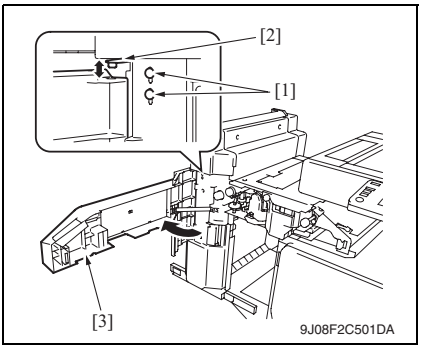

3. Loosen two screws [1] and move the hinge [2] up. Then remove the front door [3].

3.4.6 Middle guide

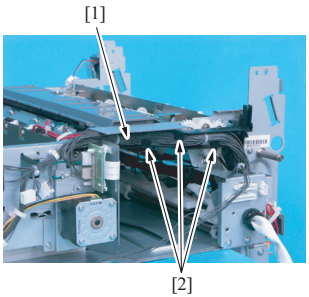

1. Remove the finisher unit.
See P.21
2. Remove the finisher unit rear cover.
See P.13
3. Remove the finisher unit upper cover.
See P.14
4. Remove the harness bundle [1] from the harness guide [2].

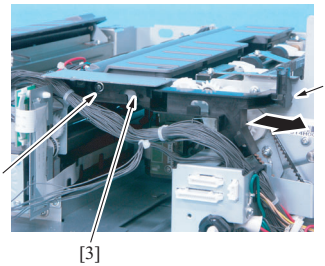

5. Remove the screw [1] and tab [2], and remove the harness guide [3].

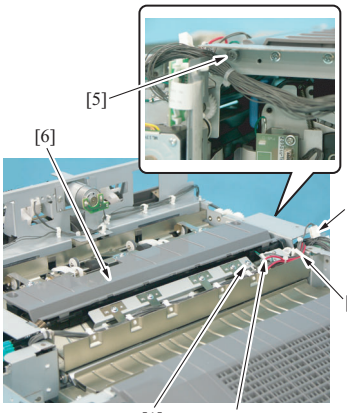

6. Remove the screw [1] and the ground wire.
7. Remove the wire saddle [2] and edge cover [3], and disconnect the connector [4].
8. Remove the shoulder screw [5] and remove the middle guide [6].

3.4.7 Intake cover

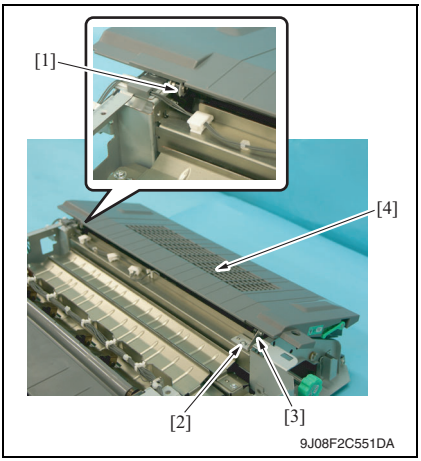

1. Remove the finisher unit.
See P.21
2. Remove the finisher unit rear cover.
See P.13
3. Remove the finisher unit upper cover.
See P.14
4. Remove the C-ring [1].
5. Remove the screw [2] and the metal bracket [3], and the intake cover [4].

3.4.8 Tray unit front cover/Tray unit rear cover/Connector cover

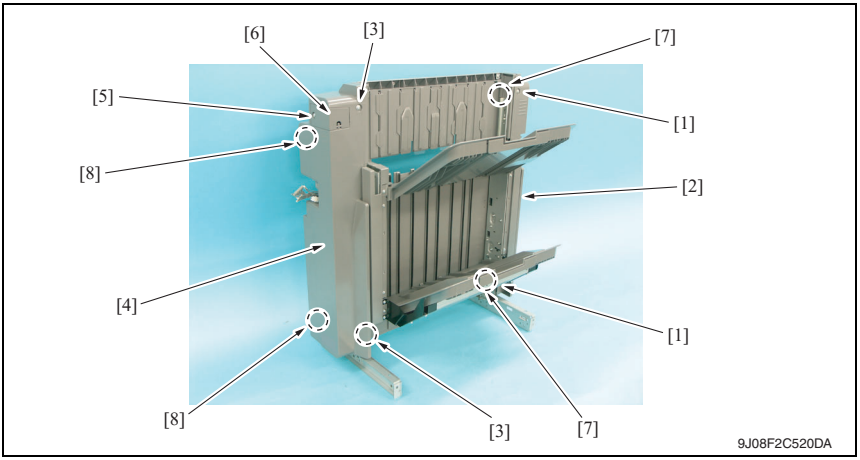

1. Remove two screws [1] and remove the tray unit front cover [2].
2. Remove two screws [3] and remove the tray unit rear cover [4].
3. Remove the screw [5] and remove the connector cover [6].

NOTE

- **When installing the tray unit front cover, snap the tab [7] first.**
- **When installing the tray unit back cover, snap the tab [8] first.**

3.4.9 Tray 1/Tray 2

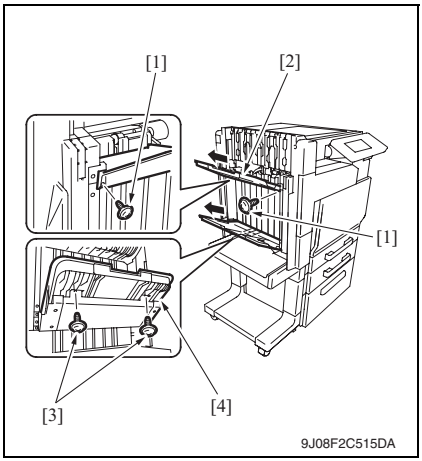

1. Remove two screws [1], and remove the tray 1 [2].
2. Remove two screws [3], and remove the tray 2 [4].

3.4.10 Output tray (OT-601): Option

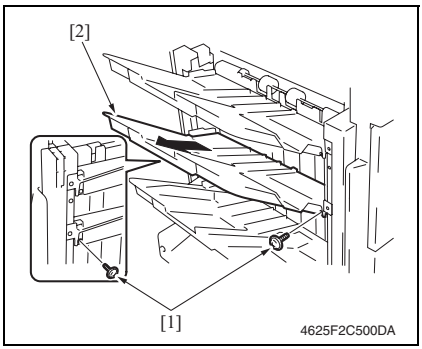

1. Remove two screws [1], and remove the output tray [2].

3.4.11 Tray unit

NOTE

- **When removing the tray unit, set the tray unit to its home position.**
- **If the exit tray (OT-601) is installed, remove it in advance.**

See P.17

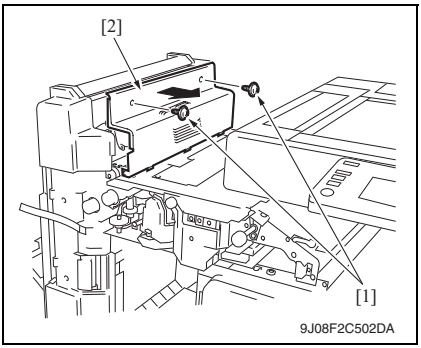

1. Remove the front door.
See P.14
2. Remove two screws [1] and remove the tray unit upper cover [2].

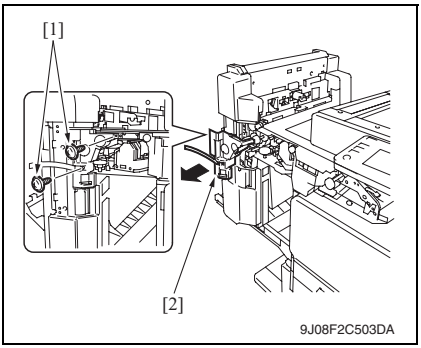

3. Remove two screws [1] and remove the finisher unit left front cover [2].

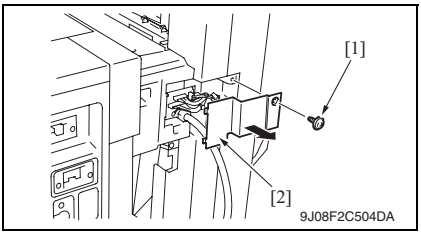

4. Remove the screw [1] and remove the connector cover [2].

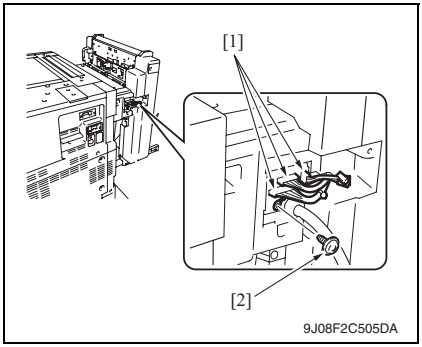

5. Disconnect three connectors [1] and remove the screw [2], and the ground wire.

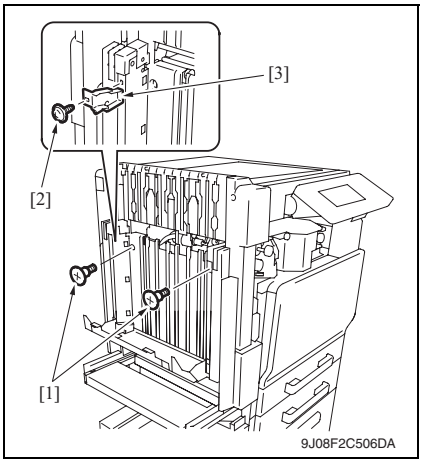

6. Remove two shoulder screws [1].

NOTE

- **When the output tray (OT-601) is mounted, remove the screw [2] and remove the mounting holder [3].**

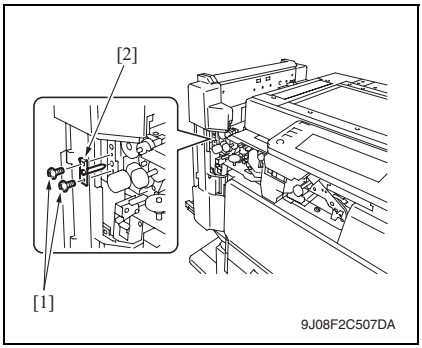

7. Remove two screws [1] and remove the mounting bracket [2].

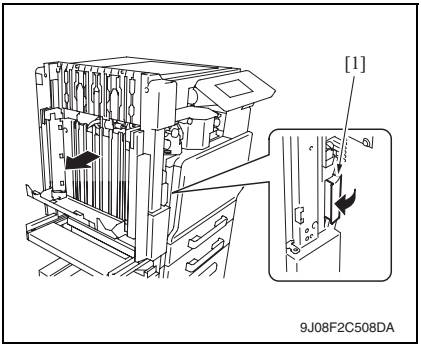

8. Pull the lock release lever [1] and remove the tray unit from the machine.

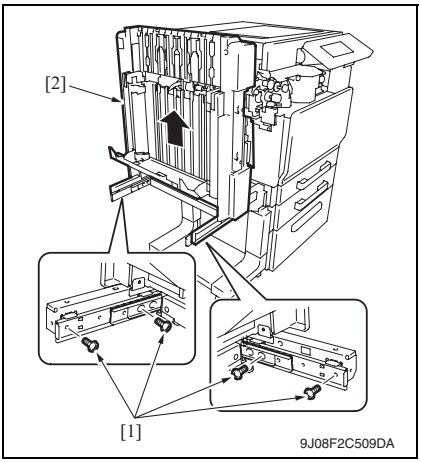

9. Remove four screws [1] and remove the tray unit [2].

NOTE

- **Make sure the height and angle adjustment of stand table when installing the finisher.**

See P.21

3.4.12 Finisher unit

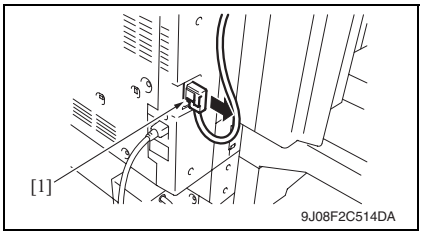

1. Remove the tray unit.
See P.18
2. Disconnect the hookup cord [1].

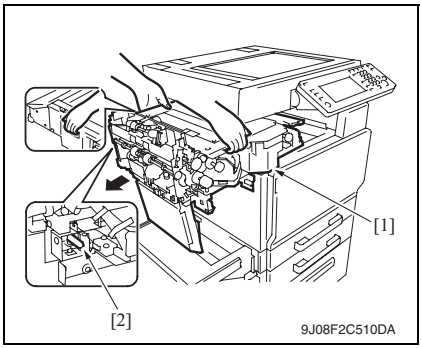

3. Hold the positions as shown in the illustration to remove the finisher unit [1].

NOTE

- **When setting the finisher unit, make sure to fit the finisher unit hole with stabilizing pin [2] and set it to the end.**
- **Make sure the height and angle adjustment of stand table when installing the finisher.**

See P.21

3.4.13 Height and angle adjustment of stand table

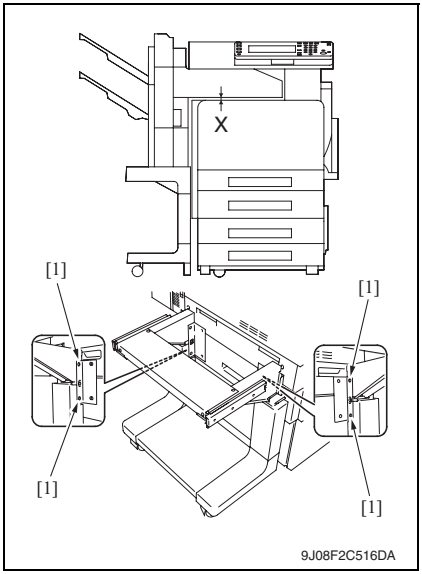

1. Measure the width of X on front and back side.
   Specifications: 6 ± 2 mm
2. When the value does not fall within the specified range, remove the tray unit and loosen four screws [1] (refer the illustration) to adjust the height of the stand table.

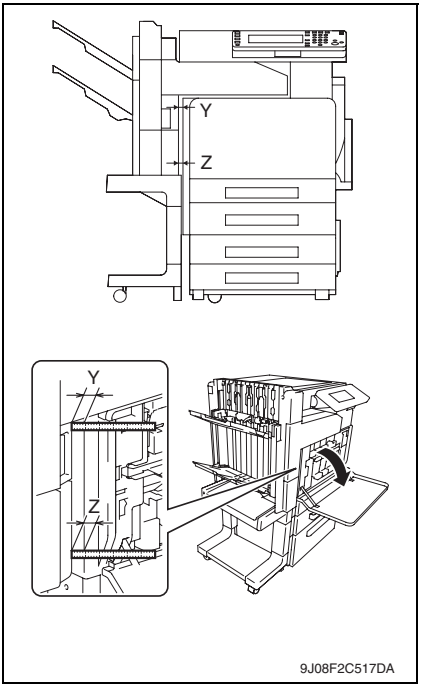

3. Measure the width of Y and Z (clearance of the exterior parts) on front and back side.
Specifications:
Y = Z - 1 mm
(Y must be smaller than Z)
Z = 7 ± 2 mm (front side)
Z = 9 ± 2 mm (back side)

NOTE

- **To measure the front side, open the front door and measure it using finisher side as supporting point referring showed on the illustration left.**

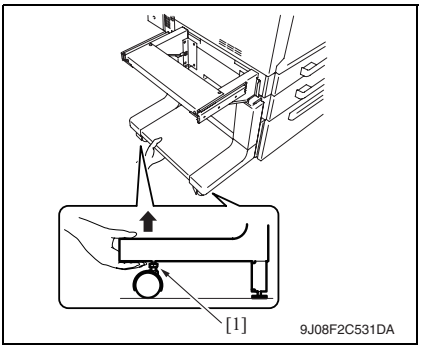

4. When the value does not fall within the specified range, remove the tray unit and pull up the casters to adjust them.

NOTE

- **For adjusting the casters, hold the bottom part of the stand table and turn the adjusting bolt [1].**

3.4.14 Stapler unit

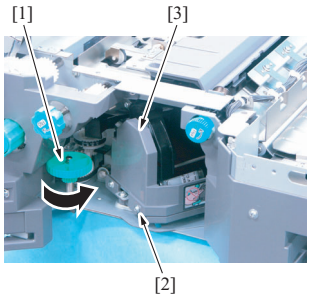

9J08F2C518DA

1. Open the front door.
2. Turn the dial [1], and move the stapler forward.
3. Remove the staple cartridge.
4. Remove the screw [2], and remove the cover [3].

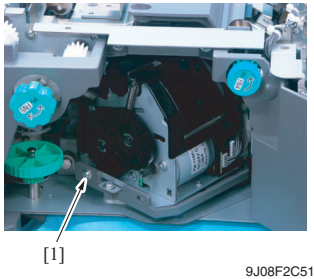

9J08F2C519DA

5. Remove the screw [1].

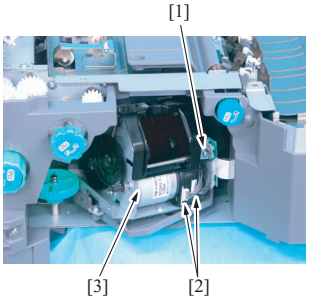

9J08F2C009DA

6. Remove the screw [1] and remove the ground wire.
7. Disconnect two connectors [2] and remove the stapler unit [3].

3.4.15 Punch kit (PK-510): Option

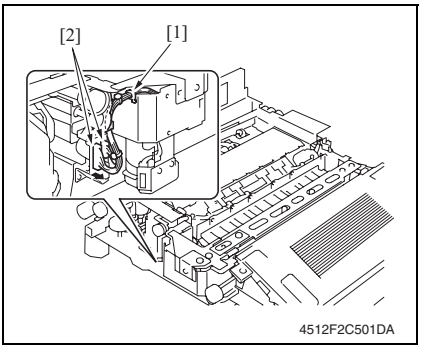

1. Remove the finisher unit.
See P.21
2. Remove the finisher unit rear cover.
See P.13
3. Remove the finisher unit upper cover.
See P.14
4. Remove the finisher unit right front cover.
See P.13
5. Remove the edge cover [1] and disconnect two connectors [2].

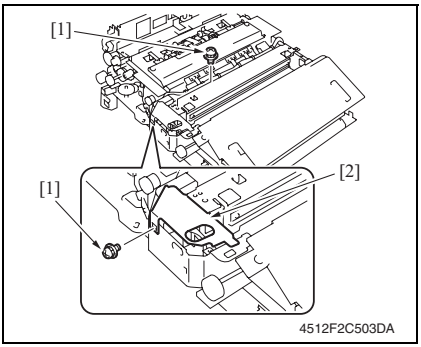

NOTE

- **When the creasing unit is mounted, remove the two screws [1], and remove the metal bracket [2].**

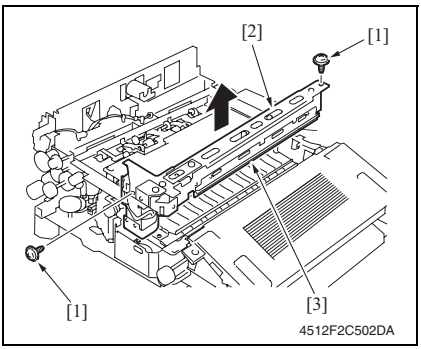

6. Remove two screws [1] and remove punch kit [2].

NOTE

- **Take care so that the mylar [3] will not be bent.**

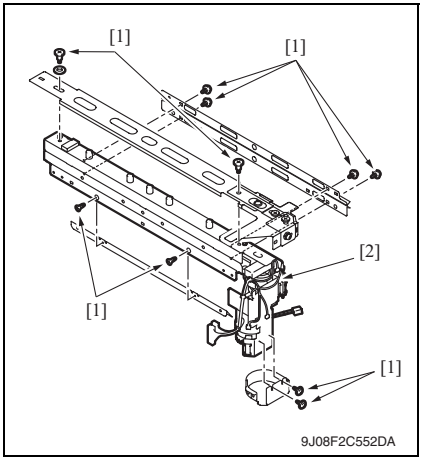

7. Remove ten screws [1] and punch kit [2].

3.4.16 Exit roller motor/Storage paddle drive clutch/Exit upper roller/Storage paddle

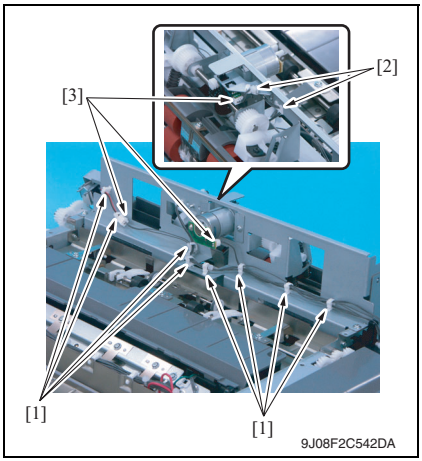

1. Remove the tray unit.
See P.18
2. Remove the finisher unit.
See P.21
3. Remove the finisher unit left front cover.
See P.13
4. Remove eight wire saddles [1] and two edge covers [2].
5. Disconnect three connectors [3].

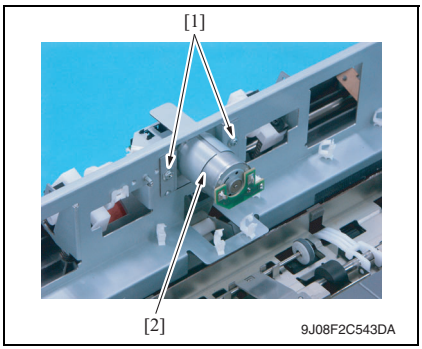

6. Remove two screws [1] and remove the exit roller motor [2].

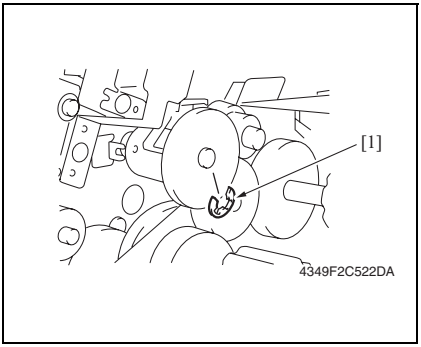

7. Remove the E-ring [1].

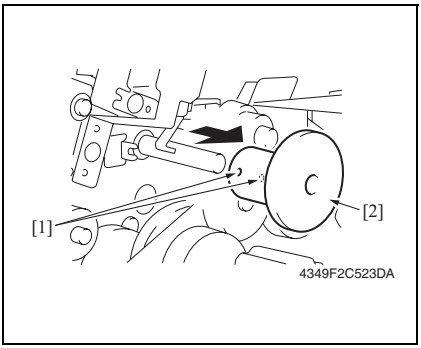

8. Loosen two hexagonal socket head screws [1], and remove the storage paddle drive clutch assy [2].

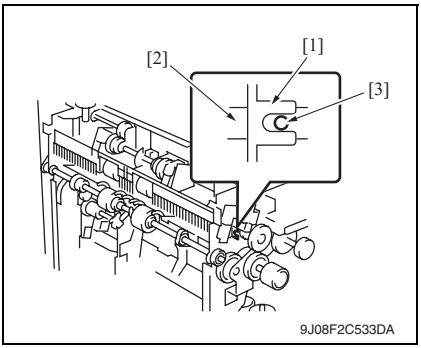

NOTE

- **When installing the storage paddle drive clutch, insert the hexagonal wrench into the flame notch [1], and confirm that the storage paddle drive axis [2] fits to the 2 mm-hole [3].**

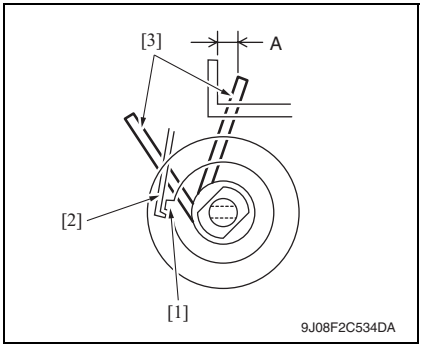

NOTE

- **When installing the storage paddle drive clutch, hook the solenoid flapper [2] on the tab [1] and confirm the storage paddle [3] locates the position as shown in the illustration.**
  Specifications A: 3.3 ± 3 mm

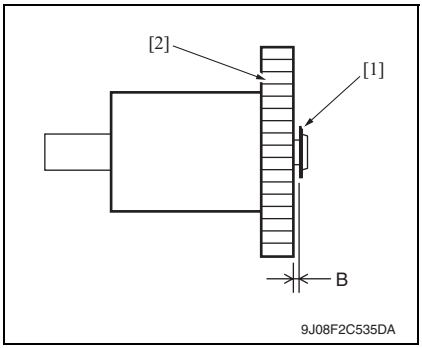

NOTE

- **When installing the storage paddle drive clutch, adjust the distance between the E-ring [1] and the storage paddle drive clutch gear [2].**
  Specifications B: 0.2 ± 0.1 mm

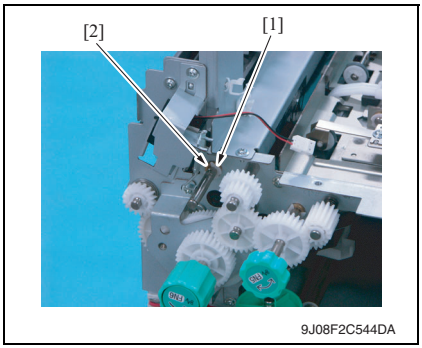

9. Remove the C-ring [1] and the bushing [2].

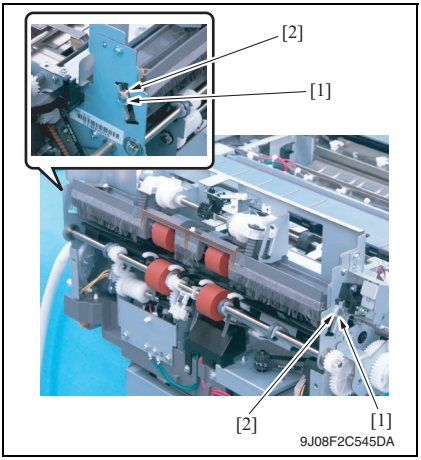

10. Remove two C-rings [1] and two bushings [2].

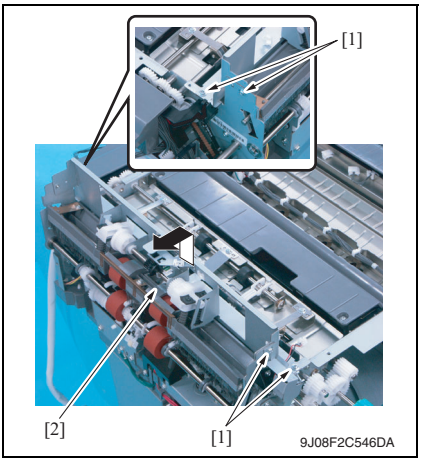

11. Remove four screws [1] and remove the exit transportation section (upper) assy [2].

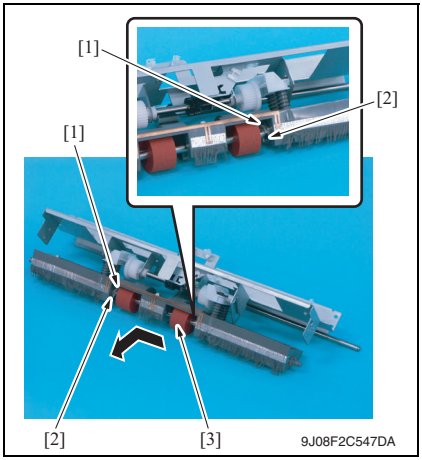

12. Remove two C-rings [1] and two bearings [2], and remove the exit upper roller assy [3].

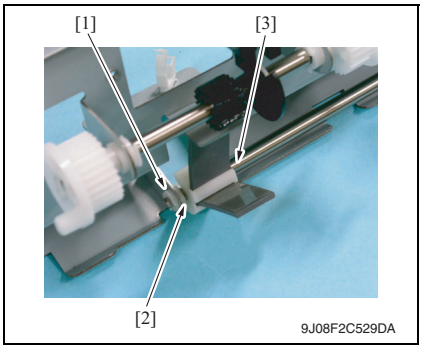

13. Remove the C-ring [1] and the bushing [2], and remove the storage paddle assy [3].

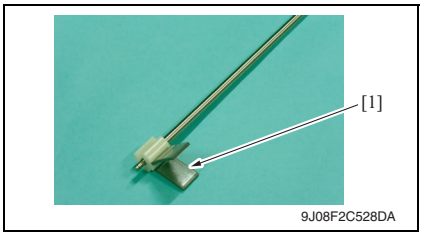

14. Remove the storage paddle [1].

15. Disassemble the pressure/retraction system units

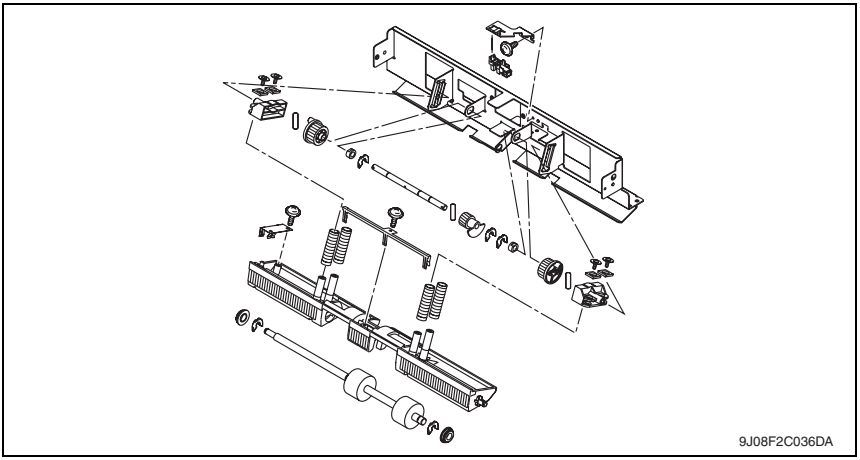

3.4.17 Exit paddle drive clutch/Exit lower roller

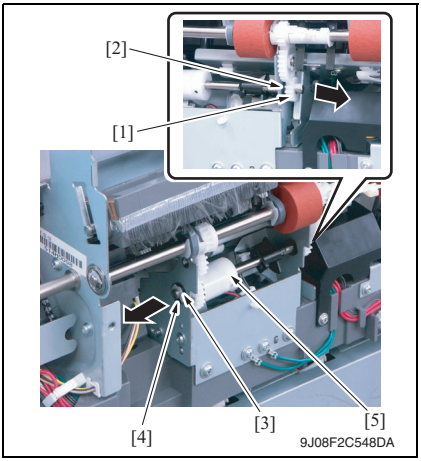

1. Remove the tray unit.
See P.18
2. Remove the finisher unit.
See P.21
3. Remove the finisher unit left front cover.
See P.13
4. Remove the gear [1] and the bushing [2].
5. Remove the C-ring [3] and the bushing [4].
6. Remove the exit paddle drive clutch assy [5].

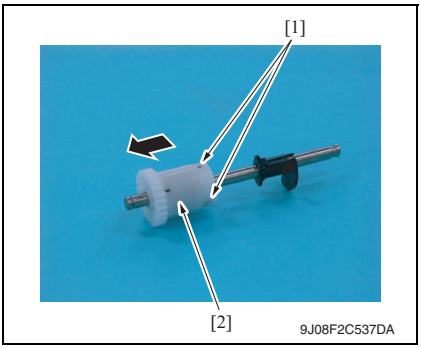

7. Loosen two hexagonal socket head screws [1], and remove the exit paddle drive clutch assy [2].

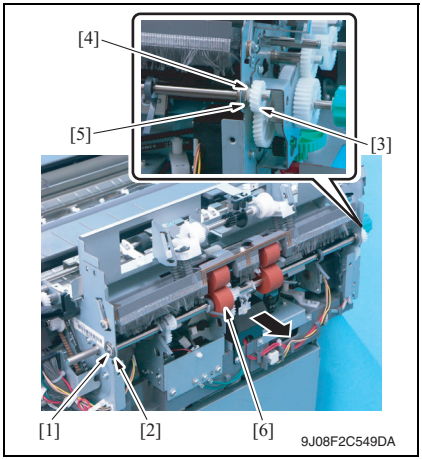

8. Remove the C-ring [1] and the bearing [2].
9. Remove the gear [3], C-ring [4] and bearing [5].
10. Remove the exit lower roller assy [6].

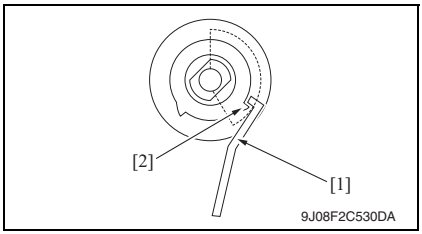

NOTE

- **When installing the exit paddle drive clutch, turn up the side that the distance between tabs is wider and hook the solenoid flapper [1] on the tab [2].**

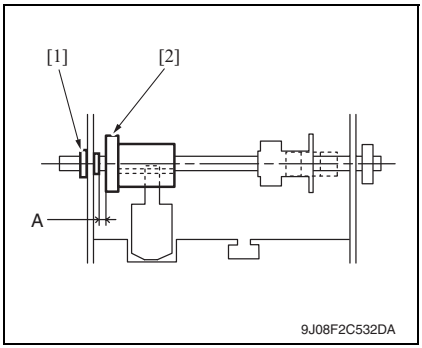

NOTE

- **When installing the exit paddle drive clutch assy, adjust the distance between the bushing [1] and the exit paddle drive clutch [2] to 0.2 mm and tighten two hexagonal socket head screws.**

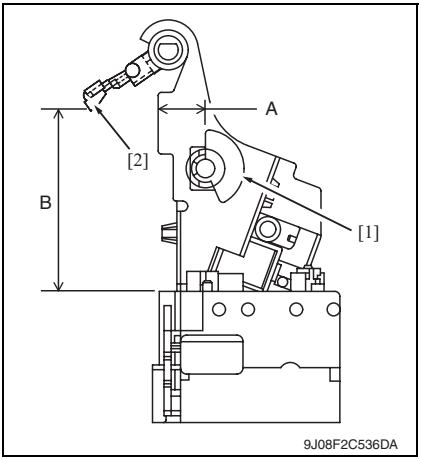

NOTE

- **When installing the exit paddle drive clutch assy, adjust the position of blocked panel [1].**
  Specifications A: 14.6 ± 1 mm
- **When installing the exit lower roller assy, adjust the position of the arm holder [2].**
  Specifications B: 56.4 ± 3 mm

11. Disassemble the exit lower roller assy

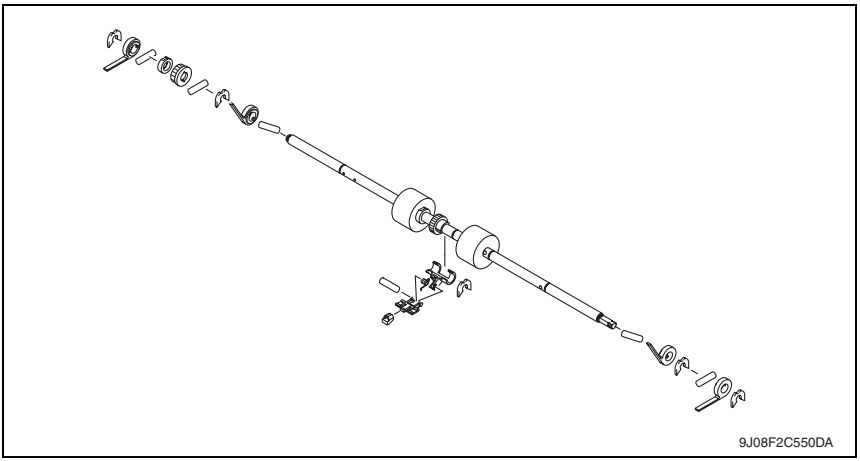

3.4.18 Aligning section

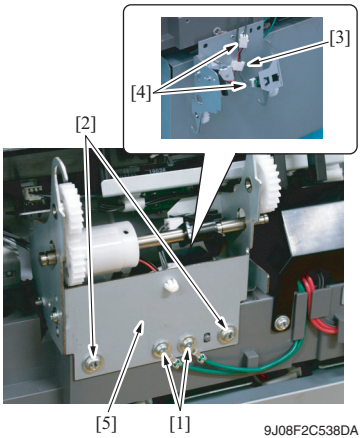

1. Remove the finisher unit left front cover.
See P.13
2. Remove the finisher unit rear cover.
See P.13
3. Remove the finisher unit upper cover.
See P.14
4. Remove the exit transportation section (upper) assy.
See P.25
5. Remove the exit lower roller assy.
See P.30
6. Remove two screws [1] and remove the ground wire.
7. Remove two screws [2].
8. Remove the wire saddle [3] and disconnect two connectors [4], and remove the exit paddle drive clutch mounting plate assy [5].

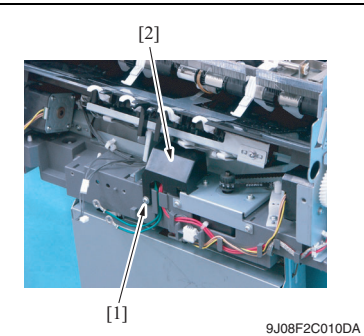

9. Remove the screw [1] and remove the connector cover [2].

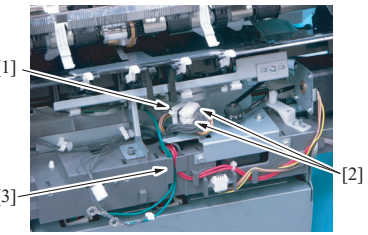

10. Remove the wire saddle [1] and disconnect two connectors [2].
11. Remove the ground wire from the harness guide [3].

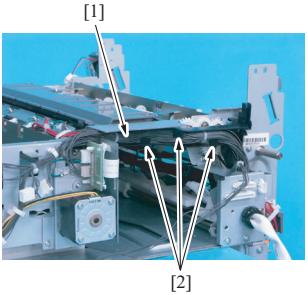

9J08F2C012DA

12. Remove the harness bundle [1] from the harness guide [2].

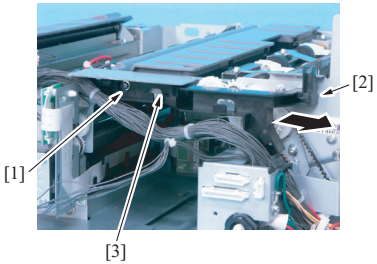

9J08F2C013DA

13. Remove the screw [1] and tab [2], and remove the harness guide [3].

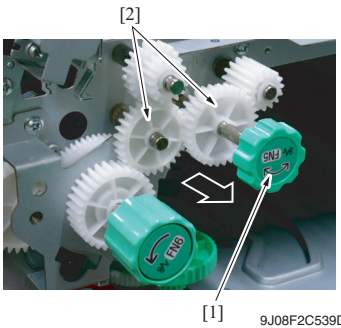

9J08F2C539DA

14. Remove the knob [1] of FN5 and remove the two gears [2].

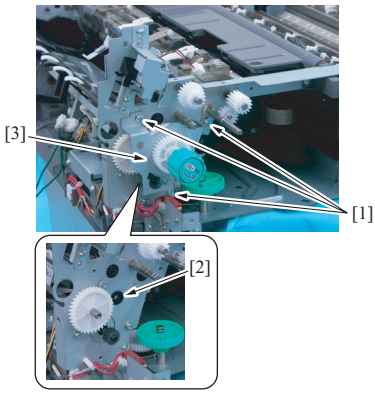

9J08F2C014DA

15. Remove three screws [1] and bushing [2], and remove the gear assy [3].

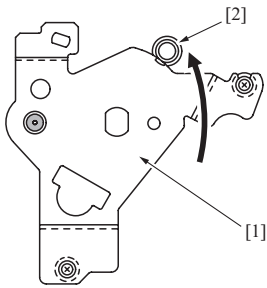

9J08F2C541DA

NOTE

- **When installing the gear assy, fit the mounting plate [1] to the caulking axis [2], and tightening with screw.**
- **Make sure that the gear rotates smoothly.**

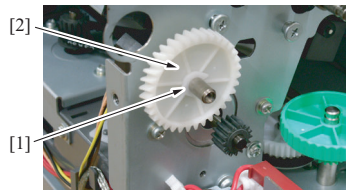

9J08F2C540DA

16. Remove the C-ring [1] and remove the gear [2].

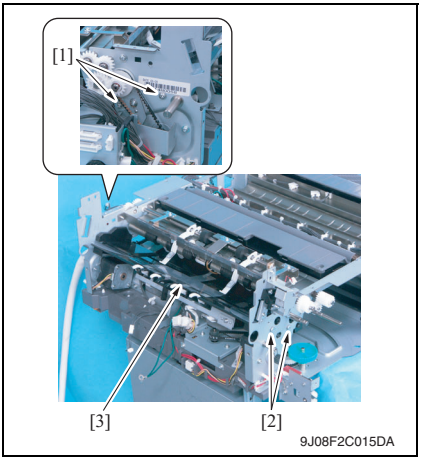

17. Remove two screws [1] and two shoulder screws [2], and remove the aligning plate assy [3].

3.4.19 Elevator motor/Timing belt

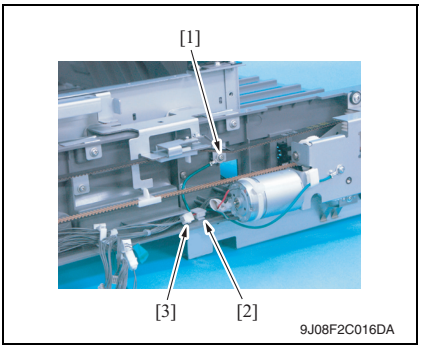

A. Removal procedure

1. Remove the tray unit.
See P.18

2. Remove the tray unit front cover.
See P.16

3. Remove the tray unit rear cover.
See P.16

4. Remove the screw [1] and remove the ground wire.

5. Remove the wire saddle [2] and disconnect the connector [3].

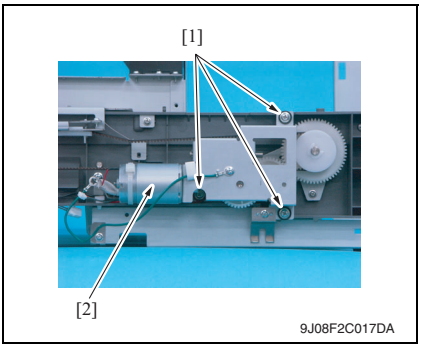

6. Remove three screws [1] and remove the elevator motor assy [2].

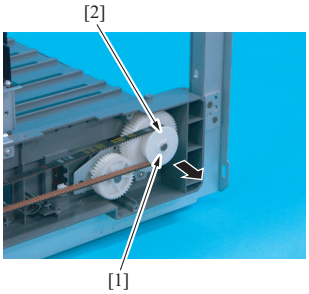

9J08F2C018DA

7. Remove the C-ring [1] and remove the gear cover [2].

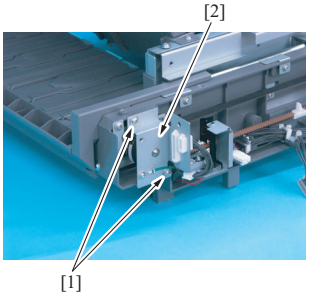

9J08F2C019DA

8. Remove two screws [1] and remove the metal bracket [2].

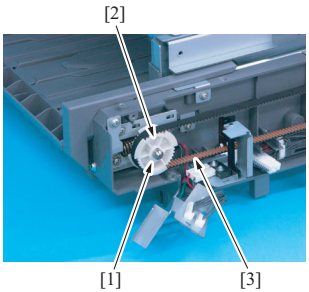

9J08F2C020DA

9. Remove the C-ring [1] and remove the gear (upper rear) [2] and belt [3].

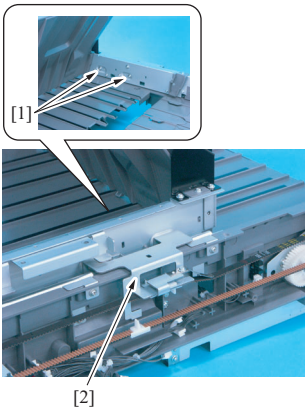

9J08F2C021DA

10. Remove two screws [1] and remove elevator mounting plate (rear) [2].

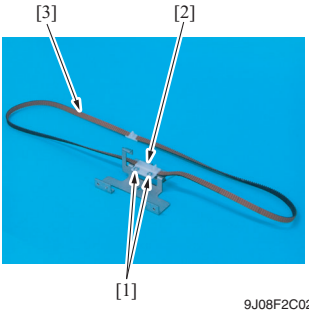

9J08F2C022DA

11. Remove two screws [1] and remove the belt holder [2].

12. Remove the timing belt (rear) [3].

NOTE

- **When installing the timing belt, make sure there is no looseness.**

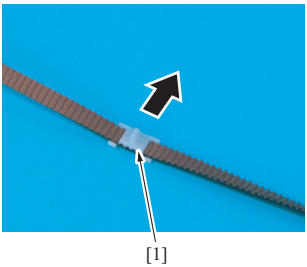

9J08F2C023DA

13. Remove the lever [1].

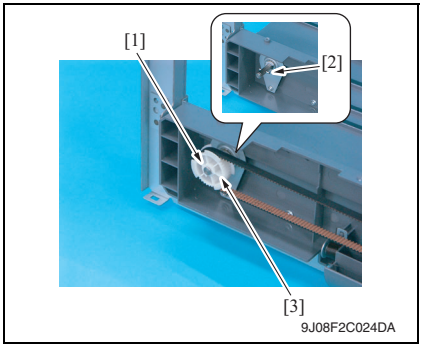

14. Remove the C-ring [1] and pin [2], and remove the gear (lower front) [3].

NOTE

- **Use care not to lose the pin.**

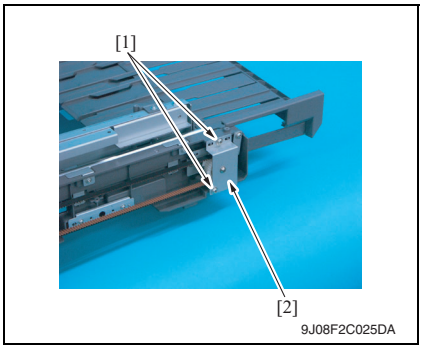

15. Remove two screws [1] and remove the metal bracket [2].

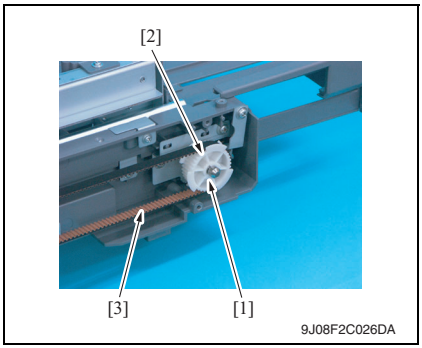

16. Remove the C-ring [1] and remove the gear (upper front) [2].

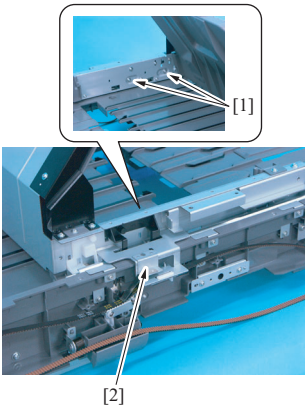

9J08F2C027DA

17. Remove two screws [1] and remove elevator mounting plate (front) [2].

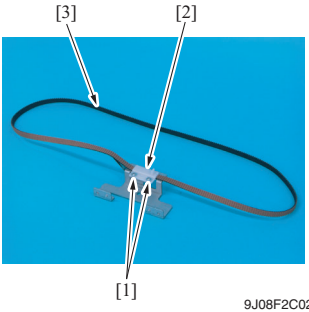

9J08F2C028DA

18. Remove two screws [1] and remove the belt holder [2].
19. Remove the timing belt (front) [3].

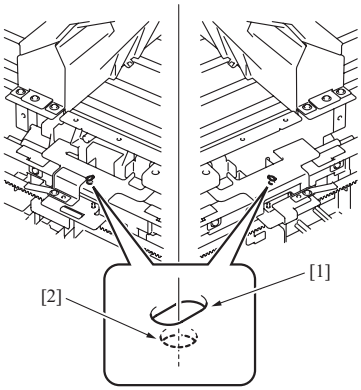

9J08F2C029DB

B. Adjustment of lever installation position

1. Install all components excepting for elevator motor assy.

NOTE

- **Fit the hole of the elevator mounting plate (front/back) [1] and the hole of the elevator tray [2], and install them by fixing the front and back along.**

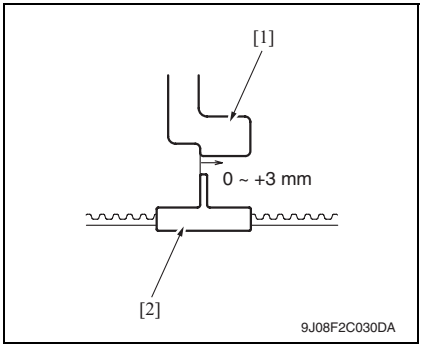

2. Fit the blocked plate [1] as shown in the illustration, and install the lever [2].
   Specifications: 0 to +3 mm
3. Install the elevator motor assy.

3.4.20 Shutter drive gear

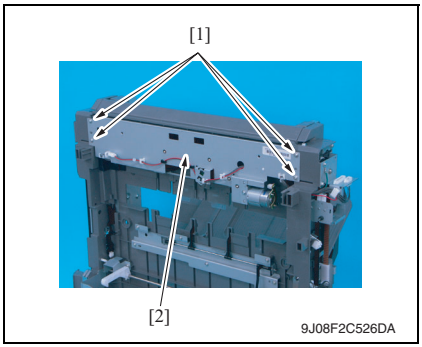

1. Remove the tray unit.
See P.18
2. Remove the tray unit front cover.
See P.16
3. Remove the tray unit rear cover.
See P.16
4. Remove four screws [1] and remove the shutter drive gear assy [2].

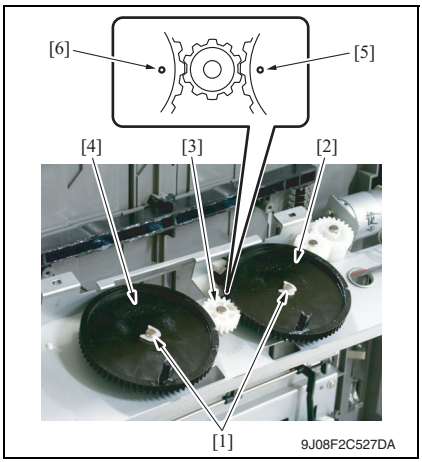

5. Remove two C-rings [1] and remove the gear 1 [2], gear 2 [3] and gear 3 [4].

NOTE

- **When installing the shutter drive gear, fit the match marks of gear 1 [5] and gear 3 [6] as shown in the left illustration.**

3.4.21 Duplex guide solenoid

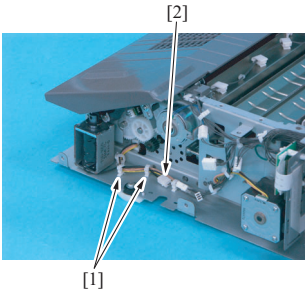

9J08F2C521DA

1. Remove the finisher unit.
See P.21
2. Remove the finisher unit rear cover.
See P.13
3. Remove the finisher unit upper cover.
See P.14
4. Remove two saddles [1] and disconnect the connector [2].

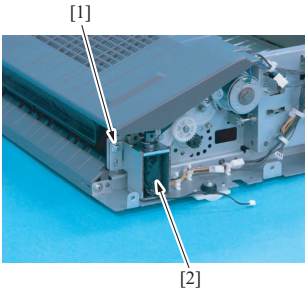

9J08F2C522DA

5. Remove the screw [1] and remove the duplex guide solenoid [2].

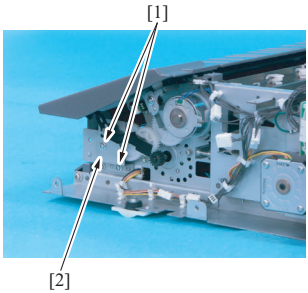

9J08F2C031DA

6. Remove two screws [1] and remove the duplex guide solenoid lever assy [2].

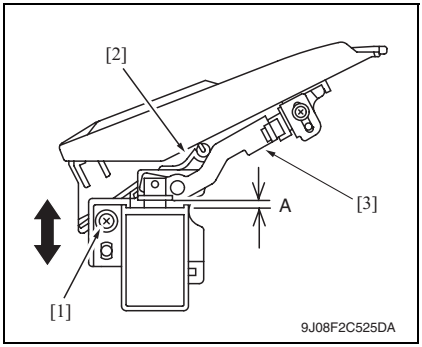

A. Adjustment

1. Loosen the screw [1].

2. Move the mounting plate up and down until the space A reaches specification, and tighten the screw [1].
Specification: 3.5 mm (Tolerance: + 0.5 mm)

NOTE

- **The switch tab [2] shall face down and touch to the lever [3].**

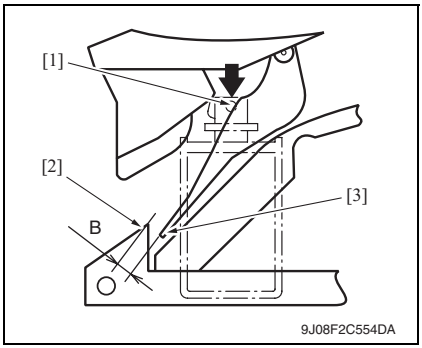

3. Lift down the plunger [1], and make sure that the gap B between switch tab end [2] and the guide [3] is over 5 mm.

3.4.22 FS control board

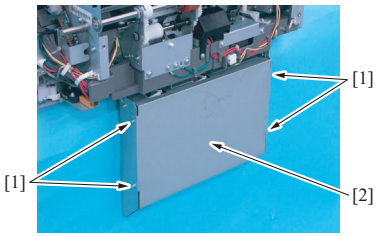

9J08F2C034DA

1. Remove the tray unit.
See P.18
2. Remove four screws [1] and remove the cover [2].

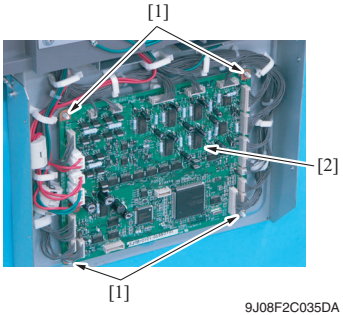

9J08F2C035DA

3. Unplug all the connectors on the FS control board.
4. Remove the board support [1], and remove the FS control board [2].

Adjustment/Setting

4. How to use the adjustment section

- “Adjustment/Setting” contains detailed information on the adjustment items and procedures for this machine.
- Throughout this “Adjustment/Setting,” the default settings are indicated by “ ”.

Advance checks

Before attempting to solve the customer problem, the following advance checks must be made. Check to see if:

- The power supply voltage meets the specifications.
- The power supply is properly grounded.
- The machine shares the power supply with any other machine that draws large current intermittently (e.g., elevator and air conditioner that generate electric noise).
- The installation site is environmentally appropriate: high temperature, high humidity, direct sunlight, ventilation, etc.; levelness of the installation site.
- The original has a problem that may cause a defective image.
- The density is properly selected.
- The original glass, slit glass, or related part is dirty.
- Correct paper is being used for printing.
- The units, parts, and supplies used for printing (developer, PC drum, etc.) are properly replenished and replaced when they reach the end of their useful service life.
- Toner is not running out.

⚠ CAUTION

- **Be sure to unplug the power cord of the machine before starting the service job procedures.**
- **If it is unavoidably necessary to service the machine with its power turned ON, use utmost care not to be caught in the scanner cables or gears of the exposure unit.**
- **Special care should be used when handling the fusing unit which can be extremely hot.**
- **The developing unit has a strong magnetic field. Keep watches and measuring instruments away from it.**
- **Take care not to damage the PC drum with a tool or similar device.**
- **Do not touch IC pins with bare hands.**

5. Sensor Check

5.1 Check procedure

- To allow sensors to be checked for operation easily and safely, data applied to the IC on the board can be checked on the panel with the main unit in the standby state (including a misfeed, malfunction, and closure failure condition).

A. Procedure

1. Call the Service Mode to the screen.

See P.304 of the main unit service manual.

2. Touch [State Confirmation].
3. Touch [Sensor Check].
4. Touch [3] or [4].

B. Sensor check screen

- This is only typical screen which may be different from what are shown on each individual main unit.

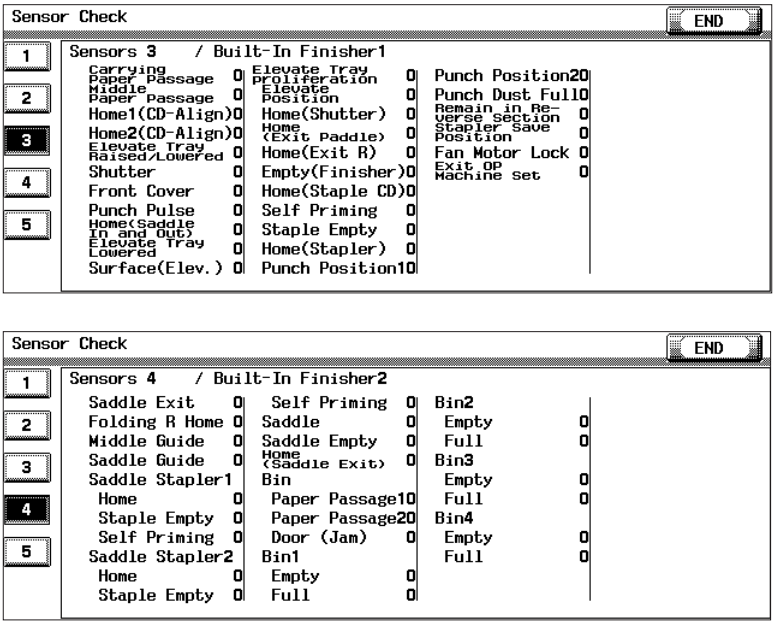

9J08F3E508DA

C. Sensor check list

Symbol	Panel display		Part/signal name	Operation characteristics/ panel display	
				1	0
PC1	Sensors 3	Carrying Paper Passage	Entrance sensor	Paper present	Paper not present
PC2		Middle Paper Passage	Transport sensor	Paper present	Paper not present
PC7		Home1 (CD-Align)	Alignment home position sensor /1	At home	Not at home
PC8		Home2 (CD-Align)	Alignment home position sensor /2	At home	Not at home
S3		Elevate Tray Raised/ Lowered	Elevator tray switch	ON	OFF
S2		Shutter	Shutter detect switch	Closed	Open
S1		Front Cover	Front door switch	Closed	Open
PC700		Punch Pulse	Punch motor pulse sensor	Blocked	Unblocked
PC23-SK		Home (Saddle In and Out)	In & out guide home sensor	Blocked	Unblocked
PC13		Elevate Tray Lowered	Elevator tray lower limit sensor	Blocked	Unblocked
PC12		Surface (Elev.)	Elevator top face detection sensor	Blocked	Unblocked
-		Elevate Tray Proliferation	Short connector	Set	Not set
PC11		Elevate Position	Elevator tray home position sensor	Blocked	Unblocked
PC14		Home (Shutter)	Shutter home position sensor	Blocked	Unblocked
PC6		Home (Exit Paddle)	Exit paddle home position sensor	Blocked	Unblocked
PC5		Home (Exit R)	Exit roller home position sensor	Blocked	Unblocked
PC3		Empty (Finisher)	Storage tray detect sensor	Blocked	Unblocked
PC9		Home (Staple CD)	Staple home position sensor	Blocked	Unblocked
-		Self Printing	Self-priming sensor	Blocked	Unblocked
-		Staple Empty	Staple empty detection sensor	Blocked	Unblocked
-		Home (Stapler)	Staple home position sensor	Blocked	Unblocked
PC500		Punch Position1	Punch cam sensor	Unblocked	Blocked
PC600		Punch Position2	Punch home position sensor	Unblocked	Blocked
PC30		Punch Dust Full	Punch Trash full sensor	Blocked	Unblocked
PC4		Remain in Reverse Section	Entrance switch back sensor	Unblocked	Blocked
PC10		Stapler Save Position	Stapler save position sensor	Blocked	Unblocked
M9		Fan Motor Lock	Cooling fan motor	When turning	When stopped
S4		Exit OP Machine Set	Slide switch	Set	Not set

6. Finisher operations

6.1 Entering Finisher

1. Call the Service Mode to the screen.

See P.304 of the main unit service manual.

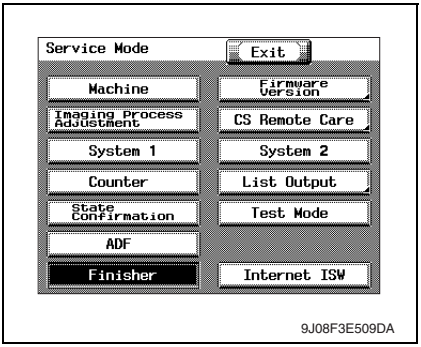

2. Touch [Finisher].

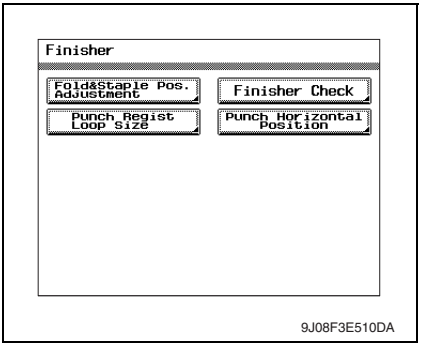

3. Touch [Finisher Check].

4. Touch the item one wants.

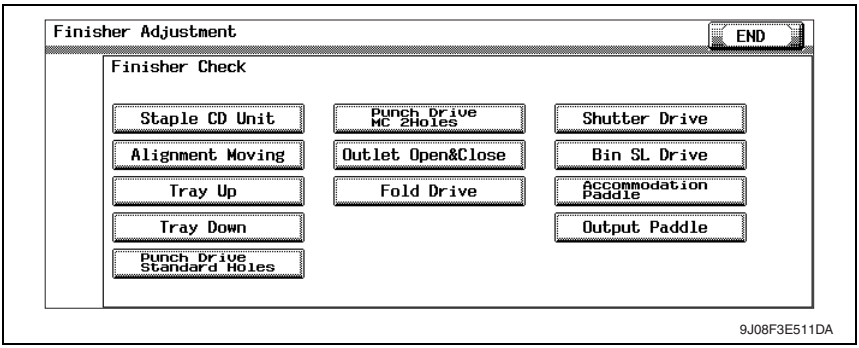

6.2 Finisher Check

A. Staple CD Unit

- Returns the staple unit to the predetermined position after it moves to the 2-point stapling position for A4.
  → Moves from the predetermined position to the inner 2-point stapling position for A4.
  → Moves from the starting position and stops after the predetermined time.
  → Moves to the front of A4.
  → Moves from the starting position and stops after the predetermined time.
  → Moves to the predetermined position.
  → The operation is finished.

B. Alignment Moving

- Aligning plates 1 and 2 return to the predetermined position after moving to the aligning position for A4S.
  → Moves from the predetermined position to the second predetermined position for A4S.
  → Stops after the predetermined time.
  → Moves to the aligning position for A4S.
  → Stops after the predetermined time.
  → Moves to the predetermined position.
  → The operation is finished.

C. Tray Up

- The elevator tray is raised to bin 1. (Bin 1 → Additional bin → Bin 2)
  → The exit opens.
  → The shutter closes.
  → The paper output tray is raised to bin 1.
  → The shutter opens.
  → The exit closes.
  → The operation is finished.

D. Tray Down

- The elevator tray is lowered from bin 1. (Bin 2 → Additional bin → Bin 1)
  → The exit opens.
  → The shutter closes.
  → The paper output tray is lowered from bin 1.
  → The shutter opens.
  → The exit closes.
  → The operation is finished.

E. Punch Drive Standard Holes (appears only when the punch kit PK-510 is installed)

- The punch is driven once at a standard hole.
  → The operation is finished.

F. Punch Drive MC 2Holes (appears only when the punch kit PK-510 is installed)

- The punch is driven once at a 2holes.
  → The operation is finished.

G. Outlet Open & Close

- Opens and closes the exit.
  → The exit opens.
  → Stops after the predetermined time.
  → The exit closes.
  → The operation is finished.

H. Fold Drive (appears only when the saddle kit SD-503 is installed)

See P.28 of the SD-503 service manual.

I. Saddle Outlet Open & Close (appears only when the saddle kit SD-503 is installed

See P.28 of the SD-503 service manual.

J. Conveyance Drive (appears only when the saddle kit SD-503 is installed)

See P.28 of the SD-503 service manual.

K. Shutter Drive

- Opens and closes the shutter.
  → The exit opens.
  → The shutter closes.
  → Stops after the predetermined time.
  → The shutter opens.
  → The exit closes.
  → The operation is finished.

L. Bin SL Drive (appears only when the mail bin kit MT-501 is installed)

See P.11 of the MT-501 service manual.

M. Accommodation Paddle

- Drive the storage paddle two turns
  → The operation is finished,

N. Output Paddle

- Drive the exit paddle one turn
  → The operation is finished,

6.3 Punch hole position adjustment (PK-510)

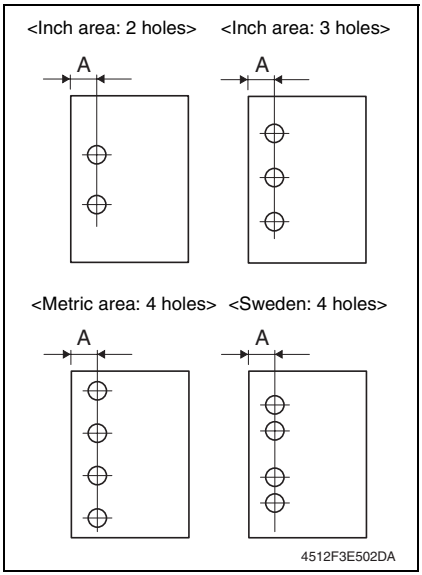

1. Set the copier into the hole punch mode and make a 1-sided copy from a 1-sided original.
2. Measure width A on the copy and check to see if the measured dimension falls within the specified range.
   <Inch area: 2 holes, 3 holes>
   Specifications: 9.5 ± 1.0 mm
   <Metric area: 4 holes>
   Specifications: 11 ± 1.0 mm
   <Sweden: 4 holes>
   Specifications: 11.5 ± 1.0 mm
3. If the measured width A outside the specified range, perform the following procedure to punch hole position adjustment.

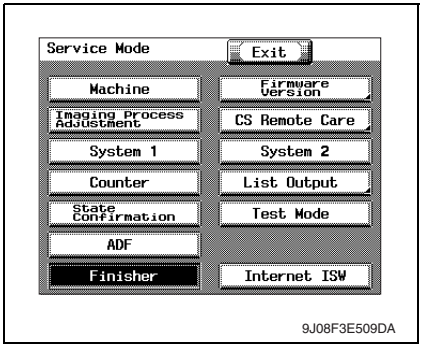

4. Call the Service Mode to the screen. See P.304 of the main unit service manual.
5. Touch [Finisher].

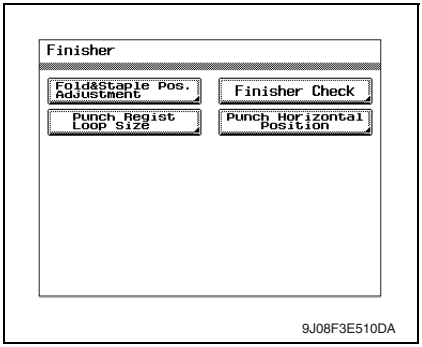

6. Touch [Punch Horizontal Position].

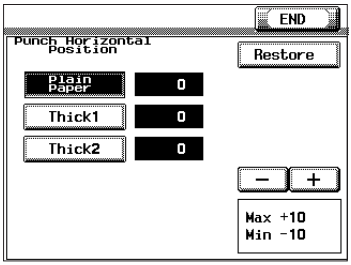

9J08F3E512DA

7. Set the correction value using the [+]/[-] keys.
- To make width A wider, enter a positive value.
- To make width A narrower, enter a negative value.
- Adjustment range: +10 max. and -10 min. (1 increment: 0.5 mm)

8. Touch [END].
9. Touch [Exit] on the Service Mode screen.
10. Turn OFF the main power switch, wait for 10 sec., then turn the switch ON.
11. Make a copy and check the punch hole positions again.

6.4 Punch loop length adjustment (PK-510)

NOTE

This adjustment must be made in any of the following cases:

- **When a slant occurs in the punch hole position.**
- **When misfeed frequently occurs in punch hole mode.**

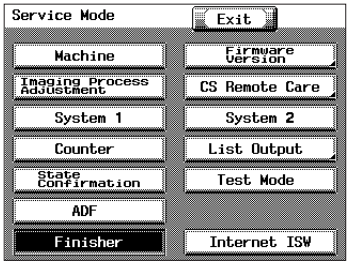

9J08F3E509DA

1. Call the Service Mode to the screen. See P.304 of the main unit service manual.
2. Touch [Finisher].

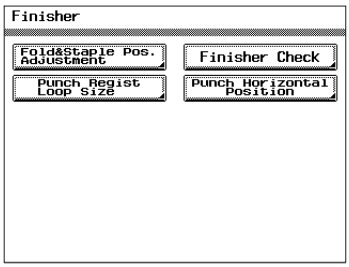

9J08F3E510DA

3. Touch [Punch Regist Loop Size].

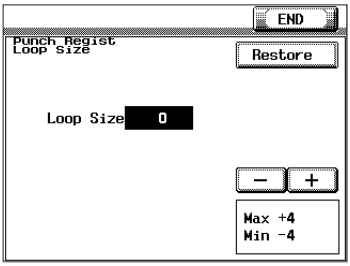

9J08F3E513DA

4. Set the correction value using the [-]/[+] keys.
   - Adjustment range: +4 max. and -4 min. (1 increment: 1 mm)
   - To make loop length larger, enter a positive value.
   - To make loop length smaller, enter a positive value.
5. Touch [END].
6. Touch [Exit] on the Service Mode screen.
7. Turn OFF the main power switch, wait for 10 sec., then turn the switch ON.
8. Make a copy again and check the deviance of punch hole position.

7. Mechanical adjustment

7.1 Punch hole deviance adjustment (PK-510)

NOTE

Make this adjustment after any of the following procedures has been performed.

- **When the punch kit has been replaced.**
- **When the punch kit has been removed.**

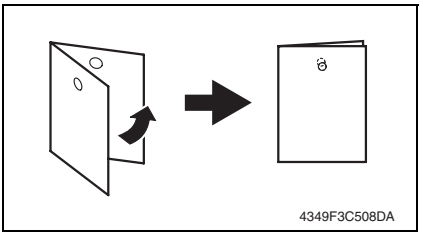

1. Set the copier into the hole punch mode and make a 1-sided copy from a 1-sided original.
2. Fold the output paper in half and check whether the punch hole positions are aligned.
   Specification: 0 ± 2 mm
3. If the punch hole position is misaligned, adjust with the following procedure.

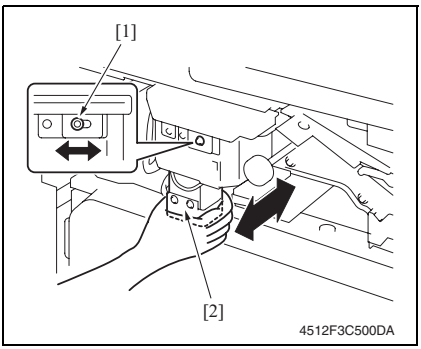

4. Remove the finisher unit right front cover.
   See P.13
5. Loosen the adjustment screw [1], and move the punch unit [2] forward or backward to make the adjustment.
6. After the adjustment has been completed, tighten the adjusting screw.
7. Make a copy and check the punch hole positions again.

7.2 Staple position adjustment

NOTE

Make this adjustment after any of the following procedures has been performed.

- **When the stapler has been replaced.**
- **When staple position is misaligned.**

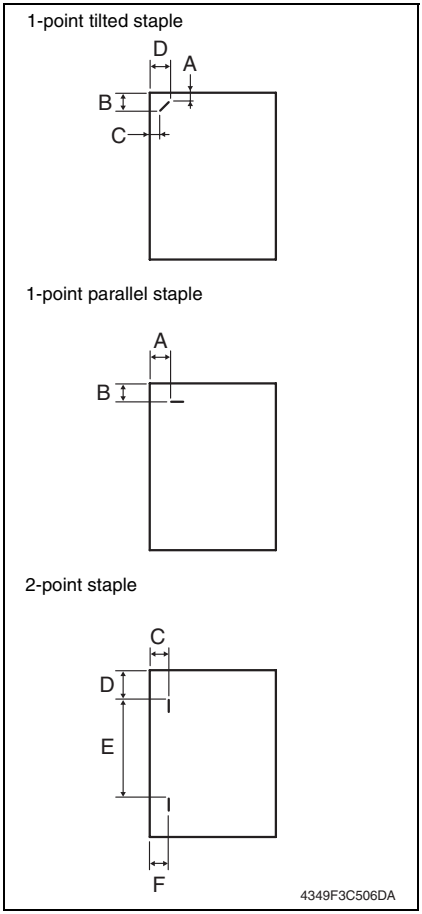

1. Set the staple mode and make a copy.
2. Check the staple position of the paper.

- 1-point tilted staple
  (Paper width: 216 to 297 mm)
  279 to 297 mm: 45° tilt,
  B5, B4S: 30° tilt

Measurement position	Specification	Adjustment range
A	4.9 mm	-3 mm to +3 mm
B	10.1 mm	-4 mm to +4 mm
C	6.5 mm	-3 mm to +3 mm
D	16.2 mm	-4 mm to +4 mm

- 1-point parallel staple
  (Paper width: 182 to 216 mm)

Measurement position	Specification	Adjustment range
A	4.5 mm	-3 mm to +3 mm
B	6 mm	-4 mm to +4 mm

- 2-point staple

Measurement position	Specification	Adjustment range
C, F	6 mm	-4 mm to +4 mm
D	Y	-4 mm to +4 mm
E	X	-4 mm to +4 mm

Y = (paper width-X-11) / 2
X = A3, A4: 137
B4, B5: 114
A4S: 190
B5S: 162
Substitute above into the equation.

3. If the staple position is misaligned, adjust with the following procedure.

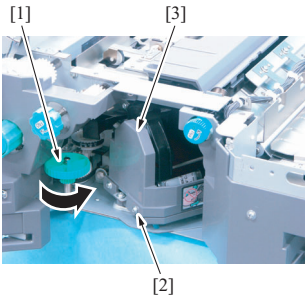

9J08F2C518DA

4. Open the front door.
5. Turn the dial [1], and move the stapler forward.
6. Loosen the screw [2], and remove the cover [3].

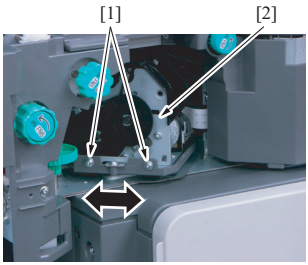

9J08F3C001DA

7. Loosen two adjustment screws [1] and move the stapler unit [2] in the direction of the arrow to make the adjustment.
8. Make another copy and check the staple position.

7.3 Staple home position sensor position adjustment

NOTE

Make this adjustment after any of the following procedures has been performed.

- **When the stapler has been replaced.**
- **When staple position is misaligned.**

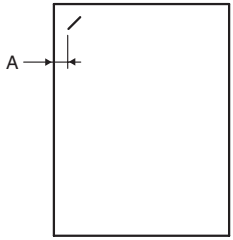

9J08F3C505DA

1. Set the staple mode and make a copy.
2. Check the staple position of the paper.

- 1-point tilted staple
  (Paper width: 216 to 297 mm)
  Specification A: 6.5 mm ± 1.5 mm

3. If the staple position does not fall within the specified range, make an adjustment as shown below.

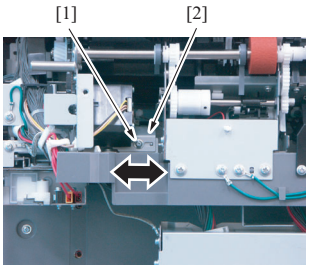

9J08F3C002DA

4. Remove the tray unit.
See P.18
5. Loosen the screw [1] and make the adjustment by shifting stapler home sensor [2] in the direction of an arrow.

7.4 Adjustment of clearance between stapler and FD stopper

NOTE

Make this adjustment after any of the following procedures has been performed.

- **When stapler fails to move appropriately.**

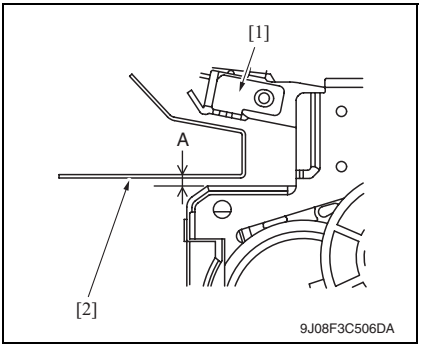

1. Check the clearance between the stapler unit [1] and the FD stopper [2] is within the specified range.
   Specification A: 2.0 mm ± 0.5 mm
2. If the value does not fall within the specified range, make the adjustment as shown below.

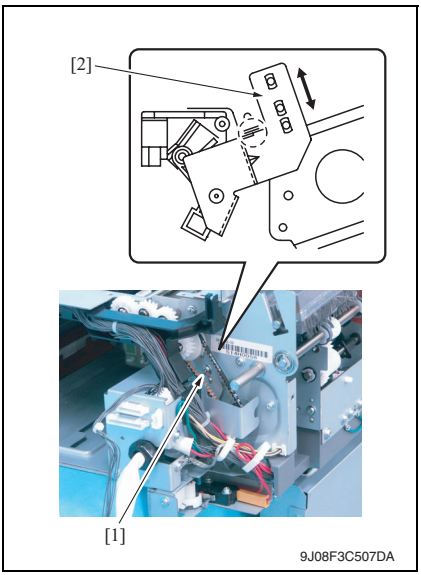

3. Remove the tray unit.
See P.18
4. Remove the finisher unit.
See P.21
5. Remove the finisher unit rear cover.
See P.13
6. Loosen the screw [1] and move the mounting plate [2] to adjust.

Troubleshooting

8. Jam display

8.1 Misfeed display

- When a paper misfeed occurs, the misfeed message, misfeed location, and paper location are displayed on the touch panel of the machine.

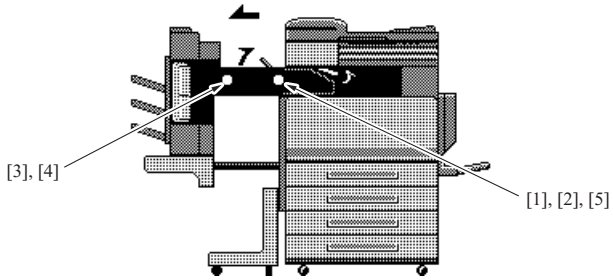

Display	Code	Misfeed location	Misfeed processing location	Action
[1]	7501	Finisher transport section misfeed	Front door	P.62
[2]	7502	Finisher exit section misfeed	Front door	P.63
[3]	7503	Finisher bundle exit misfeed	Front door	P.63
[4]	7504	Finisher staple misfeed	Front door	P.64
[5]	7508	Finisher punch misfeed	Front door	P.64

8.1.1 Misfeed display resetting procedure

- Open the corresponding door, clear the sheet of paper misfed, and close the door.

8.2 Sensor layout

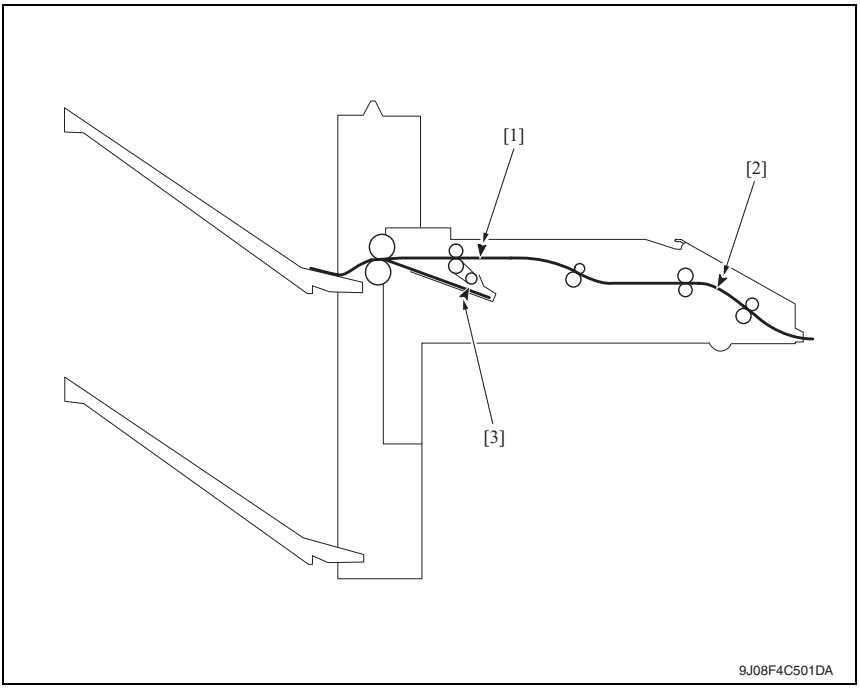

[1]	Transport sensor	PC2
[2]	Entrance sensor	PC1
[3]	Storage tray detect sensor	PC3

8.3 Solution

8.3.1 Initial check items

- When a paper misfeed occurs, first perform the following initial check items.

Check item	Action
Does paper meet product specifications?	Replace paper.
Is the paper curled, wavy, or damp?	See “Solution when paper curl occurs” on P.61.
Is a foreign object present along the paper path, or is the paper path deformed or worn?	Clean the paper path and replace if necessary.
Are rolls/rollers dirty, deformed, or worn?	Clean or replace the defective roll/roller.
Are the edge guide and trailing edge stop at the correct position to accommodate the paper?	Set as necessary.
Are the actuators operating correctly?	Correct or replace the defective actuator.

8.3.2 Solution when paper curl occurs

Step	Check items/actions		
1	Turn over the stacked paper in the paper tray.	OK	—
		NG	Go to step 2.
2	Does paper curl occur just after a warm-up has been completed or the sleep mode has been turned OFF?	YES	Go to step 3.
	Does paper curl occur under normal conditions (under conditions other than those mentioned above)?	YES	Go to step 5.
3	*1.* Call the Service Mode to the screen. *2.* Select [Machine] → [Change Warm Up Time]. *3.* Change the setting to [Mode2]. See P.310 of the main unit service manual.	OK	—
		NG	Go to step 4.
4	*1.* Call the Service Mode to the screen. *2.* Select [Machine] → [Change Warm Up Time]. *3.* Change the setting to [Mode3]. See P.310 of the main unit service manual.	—	—
5	*1.* Call the Service Mode to the screen. *2.* Select [Machine] → [Fusing Temperature]. *3.* Select a paper type. *4.* Change the temperature of Heater Roller to [-10 °C]. See P.311 of the main unit service manual.	OK	—
		NG	Go to step 6
6	*1.* Call the Service Mode to the screen. *2.* Select [Machine] → [Fusing Temperature]. *3.* Select a paper type. *4.* Change the temperature of Heater Roller to [-20 °C]. See P.311 of the main unit service manual.	—	—

8.3.3 Transport section misfeed

A. Detection timing

Type	Description
Finisher transport section misfeed detection	The entrance sensor (PC1) is not turned ON even after the set period of time has elapsed after the copier's exit sensor (PC2) is turned ON by the paper.
	The entrance sensor (PC1) is not turned OFF even after the set period of time has elapsed after the copier's exit sensor (PC2) is turned OFF by the paper.
Finisher transport section misfeed detection	The entrance sensor (PC1) is turned ON when the power switch is set to ON, a door or cover is opened and closed, or a misfeed or malfunction is reset.
	The transport sensor (PC2) is turned ON when the power switch is set to ON, a door or cover is opened and closed, or a misfeed or malfunction is reset.

B. Action

Relevant electrical parts	
Exit sensor (PC2) Entrance sensor (PC1) Transport sensor (PC2)	FS control board (FSCB) Mechanical control board (MFPB)

Step	Action	WIRING DIAGRAM	
		Control signal	Location (Electrical component)
1	Initial check items	—	—
2	PC2 sensor check	MFPB CNTH2-8 (ON)	bizhub C300/C352 C-12 to 13
3	PC1 sensor check	FSCB PJ19FSCB-11 (ON)	FS-514 C-7
4	PC2 sensor check	FSCB PJ19FSCB-14 (ON)	FS-514 C-7
5	Change FSCB	—	—
6	Change MFPB	—	—

8.3.4 Exit section misfeed

A. Detection timing

Type	Description
Finisher exit section mis-feed detection	The transport sensor (PC2) is not turned ON even after the set period of time has elapsed after the entrance sensor (PC1) is turned ON by the paper.
	The transport sensor (PC2) is not turned OFF even after the set period of time has elapsed after the entrance sensor (PC2) is turned OFF by the paper.

B. Action

Relevant electrical parts	
Entrance sensor (PC1) Transport sensor (PC2)	FS control board (FSCB) Mechanical control board (MFPB)

Step	Action	WIRING DIAGRAM	
		Control signal	Location (Electrical component)
1	Initial check items	—	—
2	PC1 sensor check	FSCB PJ19FSCB-11 (ON)	FS-514 C-7
3	PC2 sensor check	FSCB PJ19FSCB-14 (ON)	FS-514 C-7
4	Change FSCB	—	—
5	Change MFPB	—	—

8.3.5 Finisher bundle exit misfeed

A. Detection timing

Type	Description
Finisher bundle exit misfeed detection	The storage tray detect sensor (PC3) is not turned OFF even after the set period of time has elapsed after the exit motor (M4) is energized.

B. Action

Relevant electrical parts	
Storage tray detect sensor (PC3) Exit motor (M4)	FS control board (FSCB)

Step	Action	WIRING DIAGRAM	
		Control signal	Location (Electrical component)
1	Initial check items	—	—
2	PC3 sensor check	FSCB PJ14FSCB-8 (ON)	FS-514 C-12
3	M4 operation check	FSCB PJ10FSCB-5 to 8	FS-514 C-3
4	Change FSCB	—	—

8.3.6 Finisher staple misfeed

A. Detection timing

Type	Description
Finisher staple misfeed detection	The staple home position sensor in the staple unit is not turned ON even after the set period of time has elapsed after the staple motor rotates forward, and then the staple motor rotates backward, and the staple home position sensor in the staple unit is turned ON within the set period of time.

B. Action

Relevant electrical parts	
Staple unit	FS control board (FSCB)

Step	Action	WIRING DIAGRAM	
		Control signal	Location (Electrical component)
1	Initial check items	—	—
2	Drive coupling section check	—	—
3	Sensor check	—	—
4	Change staple unit	—	—
5	Change FSCB	—	—

8.3.7 Finisher punch misfeed (PK-510)

A. Detection timing

Type	Description
Finisher punch misfeed detection	Punch positioning sensors 1 and 2 are not turned ON even after the set period of time has elapsed after the punch motor is energized.

B. Action

Relevant electrical parts	
Punch unit	FS control board (FSCB)

Step	Action	WIRING DIAGRAM	
		Control signal	Location (Electrical component)
1	Initial check items	—	—
2	Drive coupling section check	—	—
3	Sensor check	—	—
4	Change punch unit	—	—
5	Change FSCB	—	—

9. Malfunction code

9.1 Trouble code

- The machine's CPU performs a self-diagnostics function that, on detecting a malfunction, gives the corresponding malfunction code and maintenance call mark on the touch panel.

Code	Description	Detection timing
C1183	Elevator motor ascent/ descent drive failure	• The elevator tray lower limit sensor (PC13) is not turned ON even after the set period of time has elapsed after the main power switch is set to ON. • The elevator tray home position sensor (PC11) and elevator top face detection sensor (PC12) are not turned ON even after the set period of time has elapsed after the elevator motor (M11) is energized. • The elevator tray does not stop at the position for the specified tray after the elevator motor (M11) is energized (beginning of descent operation) and the elevator tray lower limit sensor (PC13) is turned ON. • The elevator top face detection sensor (PC12) is not turned ON even after the set period of time has elapsed after the elevator motor (M11) is energized (beginning of ascent operation) when paper is being fed out.
C1190	Aligning plate 1 drive failure	• The alignment home position sensor/1 (PC7) is not turned ON even after the set period of time has elapsed after the main power switch is set to ON. • The alignment home position sensor/1 (PC7) is not turned OFF even after the set period of time has elapsed after the align motor/1 (M5) is energized.
C1191	Aligning plate 2 drive failure	• The alignment home position sensor/2 (PC8) is not turned ON even after the set period of time has elapsed after the main power switch is set to ON. • The alignment home position sensor/2 (PC8) is not turned OFF even after the set period of time has elapsed after the align motor/2 (M6) is energized.
C11A0	Paper holding drive failure	• The exit paddle home position sensor (PC6) is not turned ON even after the set period of time has elapsed after the exit paddle solenoid (SL2) is activated (beginning of paddle retraction operation). • The exit paddle home position sensor (PC6) is not turned OFF even after the set period of time has elapsed after the exit paddle solenoid (SL2) is activated (beginning of paddle paper-holding operation).
C11A1	Exit roller pressure/ retraction failure	• The exit roller home position sensor (PC5) is not turned ON even after the set period of time has elapsed after the exit roller motor (M10) is energized (beginning of pressure operation). • The exit roller home position sensor (PC5) is not turned OFF even after the set period of time has elapsed after the exit roller motor (M10) is energized (beginning of retraction operation).

Code	Description	Detection timing
C11A3	Shutter drive failure	• The shutter home position sensor (PC14) is not turned OFF even after the set period of time has elapsed after the shutter motor (M8) is energized (beginning of shutter-opening operation). • The shutter home position sensor (PC14) is not turned ON even after the set period of time has elapsed after the shutter motor (M8) is energized (beginning of shutter-closing operation).
C11B0	Staple unit CD drive failure	• The staple home position sensor (PC9) is not turned ON even after the set period of time has elapsed after the stapling unit moving motor (M7) is energized (beginning of return operation to predetermined position).
C11B2	Staple drive failure	• The home position sensor is not turned ON even after the set period of time has elapsed after the staple motor is energized (beginning of staple operation).
C11C0	Punch cam motor unit failure	• The punch home position sensor (PC600) is not turned ON even after the set period of time has elapsed while the punch motor (M99) is energized.
C1301	Finishing option cooling fan motor failure	• The cooling fan motor (M9) lock signal remains set to H for a set period of time while the cooling fan motor (M9) is turning. • The cooling fan motor (M9) lock signal remains set to L for a set period of time while the cooling fan motor (M9) remains stopped.
CC155	Finishing option flash ROM failure	• Data of flash ROM of the finishing options is determined to be faulty when the power is turned ON.

9.2 Solution

9.2.1 C1183: Elevator motor ascent/descent drive failure

Relevant electrical parts	
Elevator motor (M11) Elevator tray home position sensor (PC11) Elevator tray lower limit sensor (PC13)	Elevator top face detection sensor (PC12) Relay board/1 (REYB/1) FS control board (FSCB)

Step	Action	WIRING DIAGRAM	
		Control signal	Location (Electrical component)
1	Check the M11 connector for proper connection and correct as necessary.	—	—
2	Check M11 for proper drive coupling and correct as necessary.	—	—
3	If OT-601 is connected, check the connector for proper connection, and correct as necessary.	—	—
4	Check the installation position of the OT-601 tray, and correct as necessary.	—	—
5	M11 operation check	FSCB PJ6FSCB-5 to 6	FS-514 J-4
6	PC11 sensor check	FSCB PJ18FSCB-6 (ON)	FS-514 L-3
7	PC13 sensor check	FSCB PJ18FSCB-3 (ON)	FS-514 L-4
8	PC12 sensor check	FSCB PJ18FSCB-4 (ON)	FS-514 L-3
9	Change REYB/1	—	—
10	Change FSCB	—	—

9.2.2 C1190: Aligning plate 1 drive failure

9.2.3 C1191: Aligning plate 2 drive failure

Relevant electrical parts	
Align motor/1 (M5) Align motor/2 (M6) Alignment home position sensor/1 (PC7) Alignment home position sensor/2 (PC8)	FS control board (FSCB)

- C1190

Step	Action	WIRING DIAGRAM	
		Control signal	Location (Electrical component)
1	Check the M5 connector for proper connection and correct as necessary.	—	—
2	Check M5 for proper drive coupling and correct as necessary.	—	—
3	M5 operation check	FSCB PJ11FSCB-1 to 4	FS-514 C-10
4	PC7 sensor check	FSCB PJ14FSCB-3 (ON)	FS-514 C-11
5	Change FSCB	—	—

- C1191

Step	Action	WIRING DIAGRAM	
		Control signal	Location (Electrical component)
1	Check the M6 connector for proper connection and correct as necessary.	—	—
2	Check M6 for proper drive coupling and correct as necessary.	—	—
3	M6 operation check	FSCB PJ11FSCB-5 to 8	FS-514 C-11
4	PC8 sensor check	FSCB PJ14FSCB-6 (ON)	FS-514 C-11
5	Change FSCB	—	—

9.2.4 C11A0: Paper holding drive failure

Relevant electrical parts	
Exit paddle solenoid (SL2) Exit paddle home position sensor (PC6)	FS control board (FSCB)

Step	Action	WIRING DIAGRAM	
		Control signal	Location (Electrical component)
1	Check the SL2 connector for proper connection and correct as necessary.	—	—
2	PC6 sensor check	FSCB PJ13FSCB-11 (ON)	FS-514 C-4
3	SL2 operation check	FSCB PJ13FSCB-2 (REM)	FS-514 C-5
4	Change FSCB	—	—

9.2.5 C11A1: Exit roller pressure/retraction failure

Relevant electrical parts	
Exit roller motor (M10) Exit roller home position sensor (PC5)	FS control board (FSCB)

Step	Action	WIRING DIAGRAM	
		Control signal	Location (Electrical component)
1	Check the M10 connector for proper connection and correct as necessary.	—	—
2	Check M10 for proper drive coupling and correct as necessary.	—	—
3	M10 operation check	FSCB PJ12FSCB-8 to 9	FS-514 C-9
4	PC5 sensor check	FSCB PJ19FSCB-3 (ON)	FS-514 C-8
5	Change FSCB	—	—

9.2.6 C11A3: Shutter drive failure

Relevant electrical parts	
Shutter motor (M8) Shutter home position sensor (PC14)	Relay board/1 (REYB/1) FS control board (FSCB)

Step	Action	WIRING DIAGRAM	
		Control signal	Location (Electrical component)
1	Check the M8 connector for proper connection and correct as necessary.	—	—
2	Check M8 for proper drive coupling and correct as necessary.	—	—
3	M8 operation check	FSCB PJ6FSCB-7 to 8	FS-514 J-5
4	PC14 sensor check	FSCB PJ18FSCB-5 (ON)	FS-514 J-5
5	Change REYB/1	—	—
6	Change FSCB	—	—

9.2.7 C11B0: Staple unit CD drive failure

Relevant electrical parts	
Stapling unit moving motor (M7) Staple home position sensor (PC9)	FS control board (FSCB)

Step	Action	WIRING DIAGRAM	
		Control signal	Location (Electrical component)
1	Check for interference with the shutter and exit roller, and correct as necessary.	—	—
2	Check the M7 connector for proper connection and correct as necessary.	—	—
3	Check M7 for proper drive coupling and correct as necessary.	—	—
4	M7 operation check	FSCB PJ10FSCB-1 to 4	FS-514 C-3 to 4
5	PC9 sensor check	FSCB PJ13FSCB-5 (ON)	FS-514 C-4 to 5
6	Change FSCB	—	—

9.2.8 C11B2: Staple drive failure

Relevant electrical parts	
Staple unit	FS control board (FSCB)

Step	Action	WIRING DIAGRAM	
		Control signal	Location (Electrical component)
1	Check the staple unit connector for proper connection and correct as necessary.	—	—
2	Check the staple unit for proper drive coupling, and correct as necessary.	—	—
3	Staple unit operation check	—	—
4	Change staple unit	—	—
5	Change FSCB	—	—

9.2.9 C11C0: Punch cam motor unit failure

Relevant electrical parts	
Punch unit	FS control board (FSCB)

Step	Action	WIRING DIAGRAM	
		Control signal	Location (Electrical component)
1	Check the punch unit connectors for proper connection, and correct as necessary.	—	—
2	Check the punch unit for proper drive coupling, and correct as necessary.	—	—
3	Punch unit sensor check	—	—
4	Change punch unit	—	—
5	Change FSCB	—	—

9.2.10 C1301: Finishing option cooling fan motor failure

Relevant electrical parts	
Cooling fan motor (M9)	FS control board (FSCB)

Step	Action	WIRING DIAGRAM	
		Control signal	Location (Electrical component)
1	Check the M9 connector for proper connection and correct as necessary.	—	—
2	Check M9 for proper drive coupling and correct as necessary.	—	—
3	Check the FSCB connectors for proper connection, and correct as necessary.	—	—
4	M9 operation check	FSCB PJ12FSCB-3	FS-514 C-10
5	Change FSCB	—	—

9.2.11 CC155: Finishing option flash ROM failure

Relevant electrical parts	
FS control board (FSCB)	

Step	Action	WIRING DIAGRAM	
		Control signal	Location (Electrical component)
1	Disconnect and then connect the power cord. Turn OFF the main power switch, wait for 10 sec. or more, and turn ON the main power switch.	—	—
2	Rewrite firmware using the compact flash card.	—	—
3	Change FSCB	—	—

KONICA MINOLTA

SERVICE MANUAL

FIELD SERVICE

MT-501

2006.03

KONICA MINOLTA BUSINESS TECHNOLOGIES, INC. Ver. 1.0

Revision history

After publication of this service manual, the parts and mechanism may be subject to change for improvement of their performance.
Therefore, the descriptions given in this service manual may not coincide with the actual machine.

When any change has been made to the descriptions in the service manual, a revised version will be issued with a revision mark added as required.

Revision mark:

- To indicate clearly a section revised, show △1 to the left of the revised section.
  A number within △1 represents the number of times the revision has been made.

- To indicate clearly a section revised, show ▲1 in the lower outside section of the corresponding page.
  A number within ▲1 represents the number of times the revision has been made.

NOTE

Revision marks shown in a page are restricted only to the latest ones with the old ones deleted.

- When a page revised in Ver. 2.0 has been changed in Ver. 3.0:
  The revision marks for Ver. 3.0 only are shown with those for Ver. 2.0 deleted.
- When a page revised in Ver. 2.0 has not been changed in Ver. 3.0:
  The revision marks for Ver. 2.0 are left as they are.

2006/03	1.0	—	Issue of the first edition
Date	Service manual Ver.	Revision mark	Descriptions of revision

CONTENTS

MT-501

General

1. Product specification 1

Maintenance

2. Periodical check 3
2.1 Maintenance procedure (Periodical check parts) 3
2.1.1 Cleaning of the roller and roll 3
3. Other 4
3.1 Disassembly/Adjustment prohibited items 4
3.2 Disassembly/Assembly list (Other parts) 5
3.3 Disassembly/Assembly procedure 5
3.3.1 Rear cover/Right door 5
3.3.2 Front cover/Upper cover/Paper output tray 6

Adjustment/Setting

4. How to use the adjustment section 7
5. Sensor check 8
5.1 Check procedure 8
5.2 Sensor check list 8
5.2.1 Sensor check screen 8
5.2.2 Sensor check list 9
6. Finisher operations 10
6.1 Entering Finisher Check 10
6.2 Finisher Check modes 11

Troubleshooting

7. Jam display 13
7.1 Misfeed display 13
7.1.1 Misfeed display resetting procedure 13
7.2 Sensor layout 14
7.3 Solution 15
7.3.1 Initial check items 15
7.3.2 Solution when paper curl occurs 15
7.3.3 Transport section misfeed 16

Blank Page

General

1. Product specification

A. Type

Name	Mailbin kit	
Installation	Install at the top section of the finisher elevator tray.	
Number of bins	4 bins	
Number of sheets stored per bin	125 sheets (90 g/m^2, 24 lb)	
Storable paper	Plain paper	50 to 90 g/m^2 (13.25 to 24 lb)
	Recycled paper	
Storable paper size	Metric area	A5S, B5, A4
	Inch area	5 $^1/_2$ x 8 $^1/_2$S, 8 $^1/_2$ x 11

B. Machine specifications

Power requirements	DC 24 V (Supplied from the finisher) DC 5 V (Generated inside the mail bin)
Dimensions	340 mm (W) x 509 mm (D) x 387 mm (H) 13.5 inch (W) x 20 inch (D) x 15.25 inch (H)
Weight	8 kg (17.75 lb)

C. Operating environment

- Conforms to the operating environment of the main unit.

NOTE

- **These specifications are subject to change without notice.**

Blank Page

Maintenance

2. Periodical check

2.1 Maintenance procedure (Periodical check parts)

NOTE

- **The alcohol described in the cleaning procedure of maintenance represents the isopropyl alcohol.**

2.1.1 Cleaning of the roller and roll

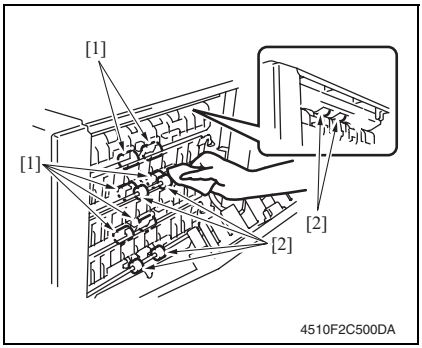

1. Open the right door.
2. Using a soft cloth dampened with alcohol, wipe the roller [1] and roll [2].

3. Other

3.1 Disassembly/Adjustment prohibited items

A. Red-painted screws

- **Do not remove or loosen any of the red-painted screws in the field. It should also be noted that, when two or more screws are used for a single part, only one representative screw may be marked with the red paint.**

B. Variable resistors on board

NOTE

- **Do not turn the variable resistors on boards for which no adjusting instructions are given in Adjustment/Setting.**

C. Removal of PWBs

⚠ CAUTION

- **When removing a circuit board or other electrical component, refer to "SAFETY AND IMPORTANT WARNING ITEMS" and follow the corresponding removal procedures.**
- **The removal procedures given in the following omit the removal of connectors and screws securing the circuit board support or circuit board.**
- **When it is absolutely necessary to touch the ICs and other electrical components on the board, be sure to ground your body.**

3.2 Disassembly/Assembly list (Other parts)

No.	Section	Part name	Ref. page
1	Exterior parts	Rear cover	P.5
2		Front cover	P.6
3		Upper cover	P.6
4		Right door	P.5
5		Paper output tray	P.6

3.3 Disassembly/Assembly procedure

3.3.1 Rear cover/Right door

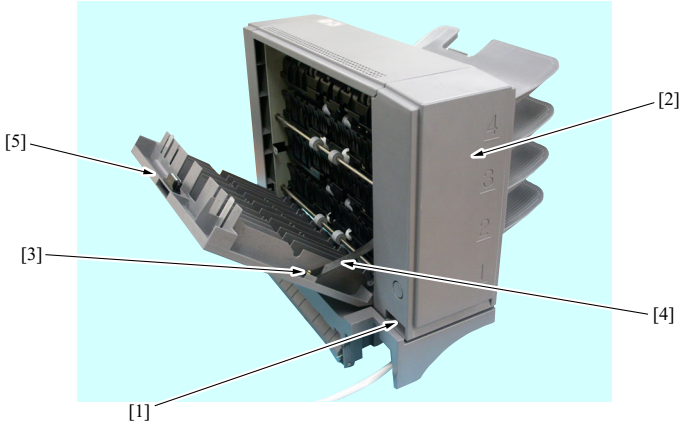

1. Remove the screw [1] and remove the rear cover [2].
2. Remove the screw [3], the stopper [4], and remove the right door [5].

3.3.2 Front cover/Upper cover/Paper output tray

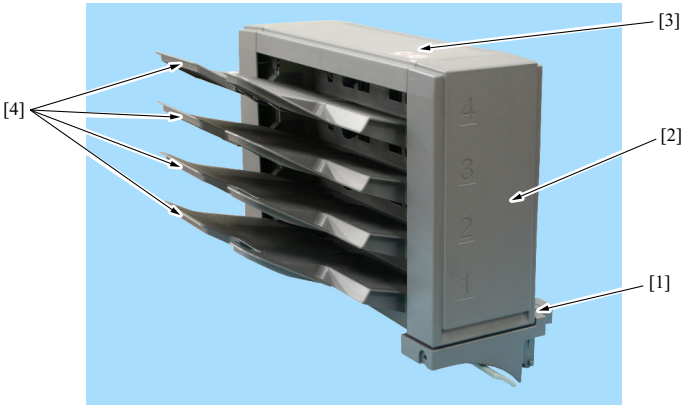

4510F2C505DA

1. Remove the screw [1] and remove the front cover [2].
2. Remove the rear cover.

See P.5

3. Remove the upper cover [3].
4. Remove the paper output trays [4].

Adjustment/Setting

4. How to use the adjustment section

- “Adjustment/Setting” contains detailed information on the adjustment items and procedures for this machine.
- Throughout this “Adjustment/Setting,” the default settings are indicated by “ ”.

Advance checks

Before attempting to solve the customer problem, the following advance checks must be made. Check to see if:

- The power supply voltage meets the specifications.
- The power supply is properly grounded.
- The machine shares the power supply with any other machine that draws large current intermittently (e.g., elevator and air conditioner that generate electric noise).
- The installation site is environmentally appropriate: high temperature, high humidity, direct sunlight, ventilation, etc.; levelness of the installation site.
- The original has a problem that may cause a defective image.
- The density is properly selected.
- The original glass, slit glass, or related part is dirty.
- Correct paper is being used for printing.
- The units, parts, and supplies used for printing (developer, PC drum, etc.) are properly replenished and replaced when they reach the end of their useful service life.
- Toner is not running out.

⚠ CAUTION

- **To unplug the power cord of the machine before starting the service job procedures.**
- **If it is unavoidably necessary to service the machine with its power turned ON, use utmost care not to be caught in the scanner cables or gears of the exposure unit.**
- **Special care should be used when handling the fusing unit which can be extremely hot.**
- **The developing unit has a strong magnetic field. Keep watches and measuring instruments away from it.**
- **Take care not to damage the PC drum with a tool or similar device.**
- **Do not touch IC pins with bare hands.**

5. Sensor check

5.1 Check procedure

- To allow sensors to be checked for operation easily and safely, data applied to the IC on the board can be checked on the panel with the main unit in the standby state (including a misfeed, malfunction, and closure failure condition).

A. Procedure

1. Call the Service Mode to the screen.

See P.304 of the main unit service manual.

2. Touch [State Confirmation].

3. Touch [Sensor Check].

4. Touch [4].

5.2 Sensor check list

5.2.1 Sensor check screen

- This is only typical screen which may be different from what are shown on each individual main unit.

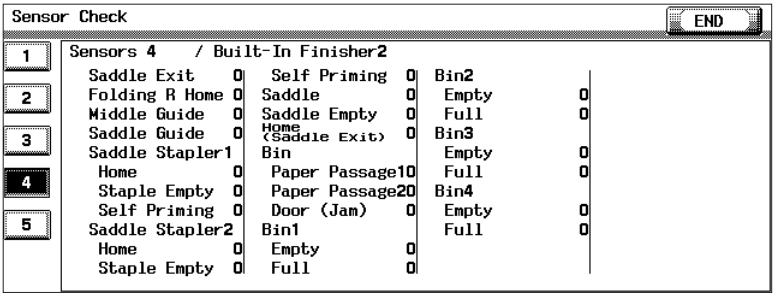

4510F3E511DA

5.2.2 Sensor check list

A. Sensors 4

Symbol	Panel display		Part/Signal name	Operation characteristics/ panel display	
				1	0
PC10-MK	Bin	Paper Passage 1	Lower transport sensor	Paper present	Paper not present
PC9-MK		Paper Passage 2	Upper transport sensor	Paper present	Paper not present
PC11-MK		Door (Jam)	Cover open/close sensor	Open	Close
PC1-MK	Bin1	Empty	Paper detection sensor 1	Paper not present	Paper present
PC5-MK		Full	Paper full detection sensor 1	Blocked	Unblocked
PC2-MK	Bin2	Empty	Paper detection sensor 2	Paper not present	Paper present
PC6-MK		Full	Paper full detection sensor 2	Blocked	Unblocked
PC3-MK	Bin3	Empty	Paper detection sensor 3	Paper not present	Paper present
PC7-MK		Full	Paper full detection sensor 3	Blocked	Unblocked
PC4-MK	Bin4	Empty	Paper detection sensor 4	Paper not present	Paper present
PC8-MK		Full	Paper full detection sensor 4	Blocked	Unblocked

6. Finisher operations

6.1 Entering Finisher Check

1. Call the Service Mode to the screen.

See P.304 of the main unit service manual.

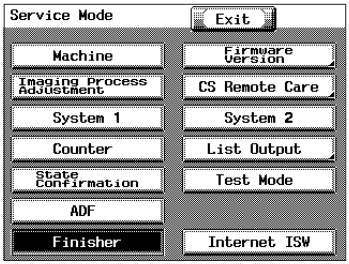

4511F3E522DA

2. Touch [Finisher].

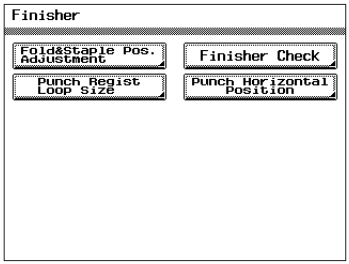

4511F3E525DA

3. Touch [Finisher Check].

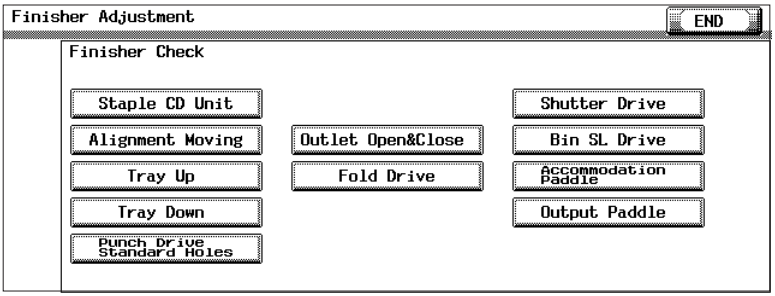

4510F3E512DA

4. Touch [Bin SL Drive].

6.2 Finisher Check modes

12: Mail bin solenoid drive mode

- Bin entrance switching solenoids 1, 2 and 3 switch, in order, at the predetermined times.
  → Bin entrance switching solenoid 1 (SL1-MK) activates for the predetermined time.
  — bin entrance switching solenoid 2 (SL2-MK) activates for the predetermined time.
  → Bin entrance switching solenoid 3 (SL3-MK) activates for the predetermined time.
  → All bin entrance switching solenoids deactivate.
  → The operation is finished.

Blank Page

Troubleshooting

7. Jam display

7.1 Misfeed display

- When misfeed occurs, message, misfeed location “Blinking” and paper location “Lighting” are displayed on the touch panel of the main unit.

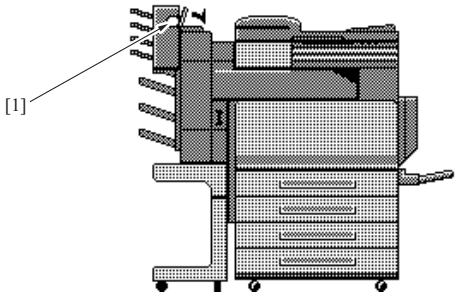

Display	Code	Misfeed location	Misfeed access location	Action
[1]	7509	Vertical transport section	Right door	P.16

7.1.1 Misfeed display resetting procedure

- Open the corresponding door, clear the sheet of paper misfed, and close the door.

7.2 Sensor layout

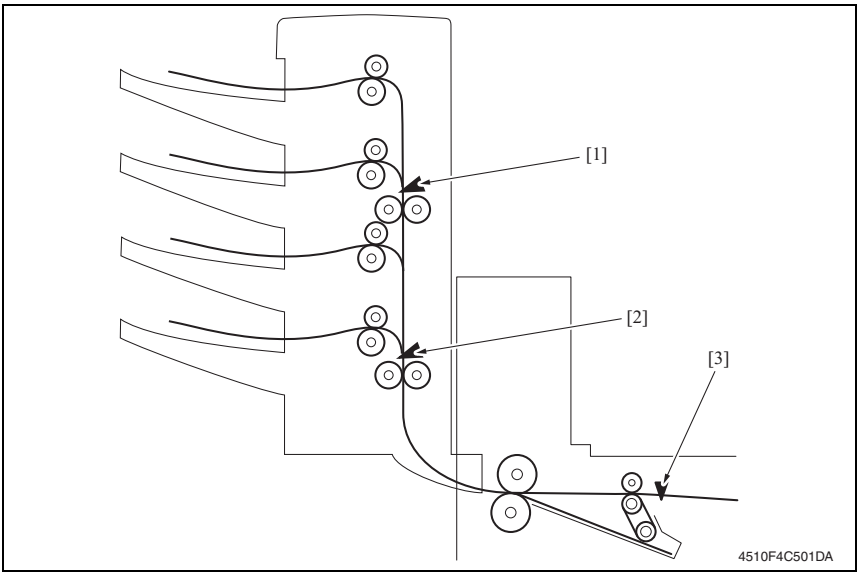

[1]	Upper transport sensor	PC9-MK
[2]	Lower transport sensor	PC10-MK
[3]	Transport sensor	PC2

7.3 Solution

7.3.1 Initial check items

- When a paper misfeed occurs, first perform the following initial check items.

Check item	Action
Does paper meet product specifications?	Replace paper.
Is the paper curled, wavy, or damp?	See “Solution when paper curl occurs” on P.15.
Is a foreign object present along the paper path, or is the paper path deformed or worn?	Clean the paper path and replace if necessary.
Are rolls/rollers dirty, deformed, or worn?	Clean or replace the defective roll/roller.
Are the edge guide and trailing edge stop at the correct position to accommodate the paper?	Set as necessary.
Are the actuators operating correctly?	Correct or replace the defective actuator.

7.3.2 Solution when paper curl occurs

Step	Check items/actions		
1	Turn over the stacked paper in the paper tray.	OK	—
		NG	Go to step 2.
2	Does paper curl occur just after a warm-up has been completed or the sleep mode has been turned OFF?	YES	Go to step 3.
	Does paper curl occur under normal conditions (under conditions other than those mentioned above)?	YES	Go to step 5.
3	*1.* Call the Service Mode to the screen. *2.* Select [Machine] → [Change Warm Up Time]. *3.* Change the setting to [Mode2]. See P.310 of the main unit service manual.	OK	—
		NG	Go to step 4.
4	*1.* Call the Service Mode to the screen. *2.* Select [Machine] → [Change Warm Up Time]. *3.* Change the setting to [Mode3]. See P.310 of the main unit service manual.	—	—
5	*1.* Call the Service Mode to the screen. *2.* Select [Machine] → [Fusing Temperature]. *3.* Select a paper type. *4.* Change the temperature of Heater Roller to [-10 °C]. See P.311 of the main unit service manual.	OK	—
		NG	Go to step 6
6	*1.* Call the Service Mode to the screen. *2.* Select [Machine] → [Fusing Temperature]. *3.* Select a paper type. *4.* Change the temperature of Heater Roller to [-20 °C]. See P.311 of the main unit service manual.	—	—

7.3.3 Transport section misfeed

A. Detection timing

Type	Description
Transport section misfeed detection	The lower transport sensor (PC10-MK) is not turned ON even after the set period of time has elapsed after the transport sensor (PC2) is turned ON by the paper.
	The upper transport sensor (PC9-MK) is not turned ON even after the set period of time has elapsed after the lower transport sensor (PC10-MK) is turned ON by the paper.
Detection of paper remaining in the transport section	The lower transport sensor (PC10-MK) is turned ON when the power switch is set to ON, a door or cover is opened and closed, or a misfeed or malfunction is reset.
	The upper transport sensor (PC9-MK) is turned ON when the power switch is set to ON, a door or cover is opened and closed, or a misfeed or malfunction is reset.

B. Action

Relevant electrical parts	
Transport sensor (PC2) Lower transport sensor (PC10-MK) Upper transport sensor (PC9-MK)	Main control board (PWB-A MK)

Step	Action	WIRING DIAGRAM	
		Control signal	Location (Electrical components)
1	Initial checks	—	—
2	PC5-FN sensor check	FSCB PJ19FSCB-14 (ON)	FS-514 C-7
3	PC10-MK sensor check	PWB-MK CN102A MK-8 (ON)	MT-501 B to C-4
4	PC9-MK sensor check	PWB-MK CN101A MK-8 (ON)	MT-501 B to C-3
5	PWB-A MK replacement	—	—

KONICA MINOLTA

SERVICE MANUAL

FIELD SERVICE

SD-503

2006.03

KONICA MINOLTA BUSINESS TECHNOLOGIES, INC. Ver. 1.0

Revision history

After publication of this service manual, the parts and mechanism may be subject to change for improvement of their performance.
Therefore, the descriptions given in this service manual may not coincide with the actual machine.

When any change has been made to the descriptions in the service manual, a revised version will be issued with a revision mark added as required.

Revision mark:

- To indicate clearly a section revised, show △1 to the left of the revised section.
  A number within △1 represents the number of times the revision has been made.

- To indicate clearly a section revised, show ▲1 in the lower outside section of the corresponding page.
  A number within ▲1 represents the number of times the revision has been made.

NOTE

Revision marks shown in a page are restricted only to the latest ones with the old ones deleted.

- When a page revised in Ver. 2.0 has been changed in Ver. 3.0:
  The revision marks for Ver. 3.0 only are shown with those for Ver. 2.0 deleted.
- When a page revised in Ver. 2.0 has not been changed in Ver. 3.0:
  The revision marks for Ver. 2.0 are left as they are.

2006/03	1.0	—	Issue of the first edition
Date	Service manual Ver.	Revision mark	Descriptions of revision

CONTENTS

SD-503

General

1. Product specification 1

Maintenance

2. Periodical check 3
2.1 Maintenance procedure (Periodical check parts) 3
2.1.1 Cleaning of the rollers and rolls 3
3. Service tool 3
3.1 CE tool list 3
4. Other 4
4.1 Disassembly/Adjustment prohibited items 4
4.2 Disassembly/Assembly list (other parts) 5
4.2.1 Disassembly/Assembly parts list 5
4.3 Disassembly/Assembly procedure 5
4.3.1 Paper output tray/front cover 5
4.3.2 Rear cover 6
4.3.3 Upper cover 6
4.3.4 Saddle unit 7
4.3.5 Crease unit 9
4.3.6 Stapler unit 11
4.3.7 In & out guide drive motor 15
4.3.8 Crease roller 17

Adjustment/Setting

5. How to use the adjustment section 25
6. Sensor check 26
6.1 Check procedure 26
6.2 Sensor check list 26
6.2.1 Sensor check screen 26
6.2.2 Sensor check list 27
7. Finisher operations 28
7.1 Entering Finisher Check 28
7.2 Finisher Check modes 29
7.3 Fold & Staple Pos. Adjustment 30

7.4 Center Staple Position Adjustment 32
8. Mechanical adjustment 35
8.1 Fold Angle Adjustment 35
8.2 Center Staple Angle Adjustment 36

Troubleshooting

9. Jam display 37
9.1 Misfeed display 37
9.2 Sensor layout 37
9.3 Solution 38
9.3.1 Initial check items 38
9.3.2 Solution when paper curl occurs 38
9.3.3 Paper bundle exit misfeed 39
9.3.4 Staple unit 1 misfeed/Staple unit 2 misfeed 40
9.3.5 Creasing section misfeed 41
10. Malfunction code 42
10.1 Trouble code 42
10.2 Solution 43
10.2.1 C11A2: Saddle exit roller pressure/retraction failure 43
10.2.2 C11A4: Saddle exit motor failure 43
10.2.3 C11A5: Saddle in & out guide motor failure 44
10.2.4 C11A6: Saddle layable guide drive failure 44
10.2.5 C11B5: Side staple 1 drive failure 45
10.2.6 C11B6: Side staple 2 drive failure 45
10.2.7 C11D0: Crease motor drive failure 45

General

1. Product specification

A. Type

Name	Saddle sticher SD-503
Type	Built into the finisher
Installation	Screwed to the finisher
Document alignment	Center
Stapling function	Center parallel two points No. of sheets to be stapled together: 2 to 15

B. Paper type

Type	Plain paper	50 g/m^2 to 90 g/m^2 13.25 to 24 lb
	Recycled paper	
Size	B5S to A3 8 $^1/_2$ x 11S to 11 x 17	
Capacity	200 sheets or 20 copies	

C. Machine specifications

Power requirements		DC 24 V (supplied from the finisher) DC 5 V
Max. power consumption		9.5 W or less
Dimensions	Crease unit	48 mm (W) x 399 mm (D) x 121 mm (H) 2 inch (W) x 15.75 inch (D) x 4.75 inch (H)
	Saddle unit	445 mm (W) x 478 mm (D) x 203 mm (H) 17.5 inch (W) x 18.75 inch (D) x 8 inch (H) 576 mm (W) x 478 mm (D) x 281 mm (H) *1 22.75 inch (W) x 18.75 inch (D) x 11 inch (H) *1
Weight	Crease unit	1.9 kg (0.5 lb)
	Saddle unit	7.4 kg (2.0 lb)

*1: Size when the paper output tray is pulled out

D. Operating environment

- Conforms to the operating environment of the main unit.

E. Consumables

- Staples 2000 (MS-2C) x 2

NOTE

- **These specifications are subject to change without notice.**

Blank Page

Maintenance

2. Periodical check

2.1 Maintenance procedure (Periodical check parts)

NOTE

- **The alcohol described in the cleaning procedure of maintenance represents the isopropyl alcohol.**

2.1.1 Cleaning of the rollers and rolls

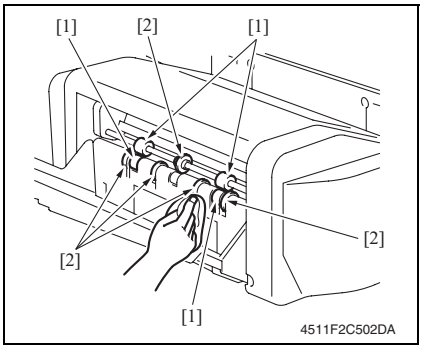

1. Using a soft cloth dampened with alcohol, wipe the roller [1] and roll [2].

2. Remove the crease unit.
See P.9

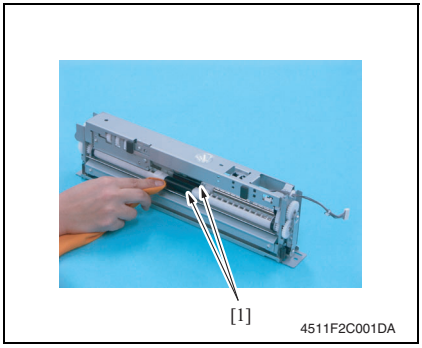

3. Using a soft cloth dampened with alcohol, wipe the roller [1].

3. Service tool

3.1 CE tool list

Tool name	Shape	Personnel	Parts No.	Remarks
Stapler unit positioning jig	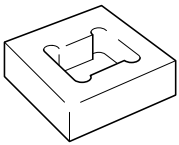	1	4511-7901-01	

4. Other

4.1 Disassembly/Adjustment prohibited items

A. Red-painted screws

- **Do not remove or loosen any of the red-painted screws in the field. It should also be noted that, when two or more screws are used for a single part, only one representative screw may be marked with the red paint.**

B. Variable resistors on board

NOTE

- **Do not turn the variable resistors on boards for which no adjusting instructions are given in Adjustment/Setting.**

C. Removal of PWBs

⚠ CAUTION

- **When removing a circuit board or other electrical component, refer to "SAFETY AND IMPORTANT WARNING ITEMS" and follow the corresponding removal procedures.**
- **The removal procedures given in the following omit the removal of connectors and screws securing the circuit board support or circuit board.**
- **When it is absolutely necessary to touch the ICs and other electrical components on the board, be sure to ground your body.**

4.2 Disassembly/Assembly list (other parts)

4.2.1 Disassembly/Assembly parts list

No.	Section	Part name	Ref. page
1	Exterior parts	Paper output tray	P.5
2		Front cover	P.5
3		Upper cover	P.6
4		Rear cover	P.6
5	Unit	Saddle unit	P.7
6		Crease unit	P.9
7		Stapler unit	P.11
8	Others	In & out guide drive motor	P.15
9		Crease roller	P.17

4.3 Disassembly/Assembly procedure

4.3.1 Paper output tray/front cover

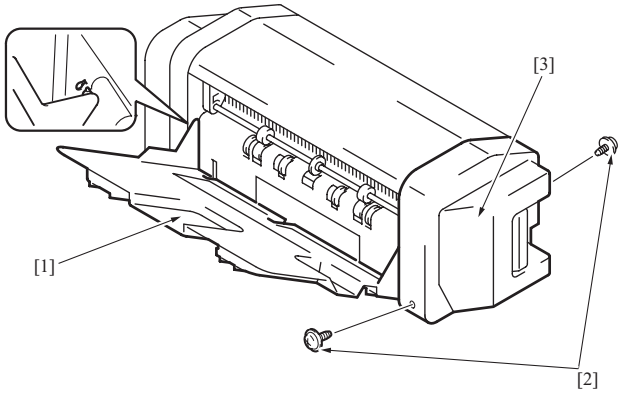

1. Align the cutout and remove the paper output tray [1].
2. Remove two screws [2], and remove the front cover [3].

4.3.2 Rear cover

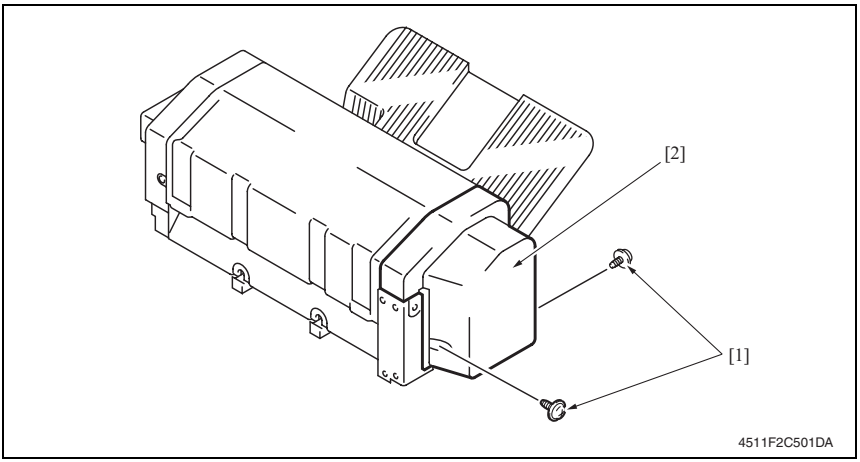

1. Remove two screws [1], and remove the rear cover [2].

4.3.3 Upper cover

1. Remove the front cover.
See P.5
2. Remove the rear cover.
See P.6

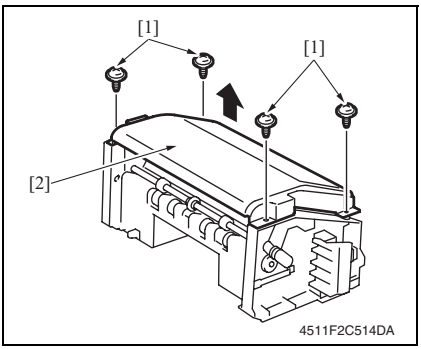

3. Remove four screws [1], and remove the upper cover [2].

4.3.4 Saddle unit

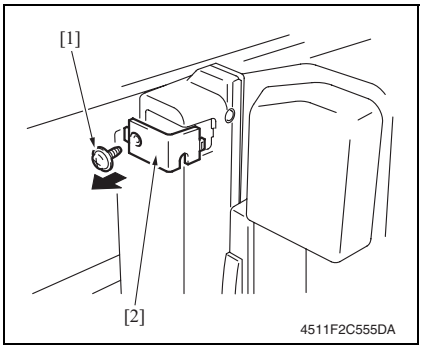

1. Remove the screw [1], and remove the connector cover [2].

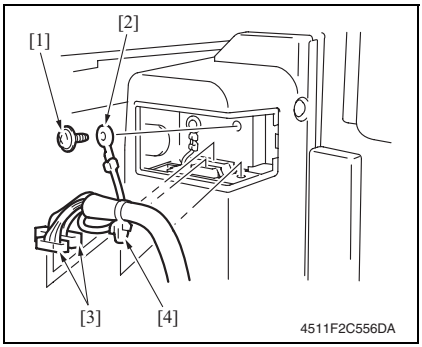

2. Remove the screw [1], and remove the ground wire [2].
3. Unplug two connectors [3].
4. Remove the snap band [4].

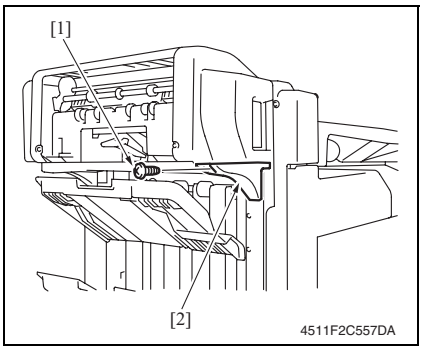

5. Remove the screw [1], and remove the mounting bracket [2].

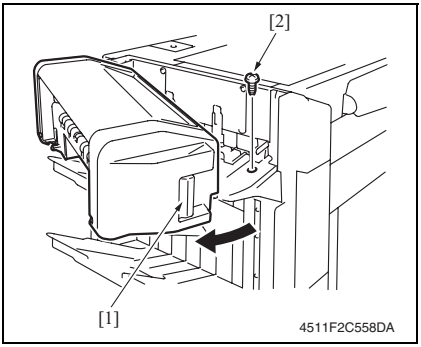

6. Pull the lock release lever [1], and open the saddle unit.
7. Remove the screw [2].

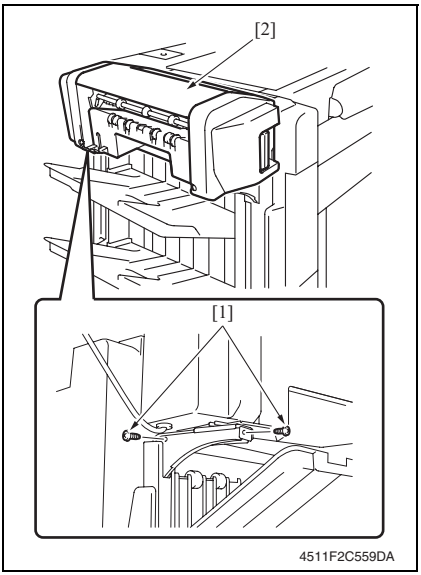

8. Remove two screws [1], and remove the saddle unit [2].

4.3.5 Crease unit

1. Remove the saddle unit.

See P.7

2. Remove the finisher unit.

See P.21 of the FS-514/PK-510/OT-601 service manual.

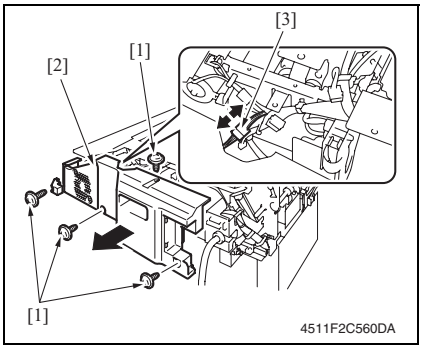

3. Remove four screws [1] and remove the finisher unit rear cover [2].
4. Unplug the connector [3].

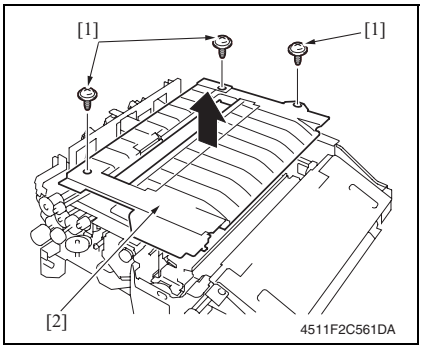

5. Remove three screws [1] and remove the finisher unit upper cover [2].

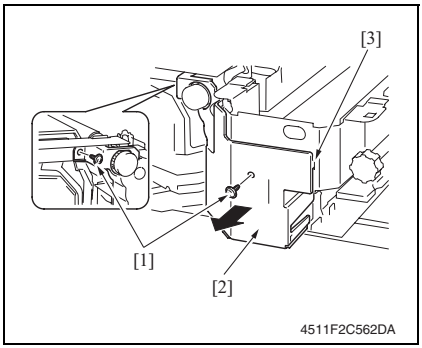

6. Remove two screws [1] and remove the finisher unit right front cover [2].

NOTE

- **At reinstallation, first fit the tab [3] into position.**

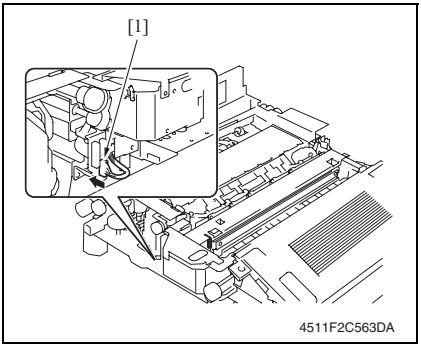

7. Unplug the connector [1].

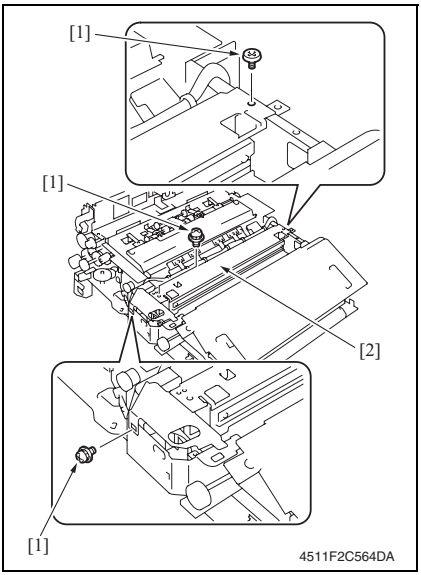

8. Remove three screws [1], and remove the crease unit [2].

NOTE

- **When the punch kit is mounted, remove the punch kit first.**

4.3.6 Stapler unit

1. Remove the saddle unit.
See P.7
2. Remove the paper output tray.
See P.5
3. Remove the front cover.
See P.5
4. Remove the rear cover.
See P.6
5. Remove the upper cover.
See P.6

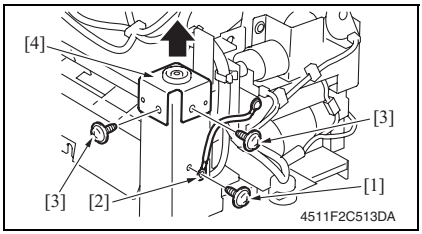

6. Remove the screw [1], and remove the ground wire [2].
7. Remove two screws [3], and remove the holder [4].

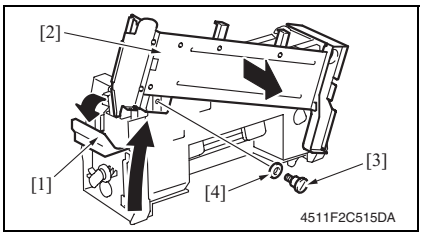

8. Release the lock release lever [1], and slide the saddle unit mounting plate [2].
9. Remove the shoulder screw [3] and the washer [4], and remove the saddle unit mounting plate [2].

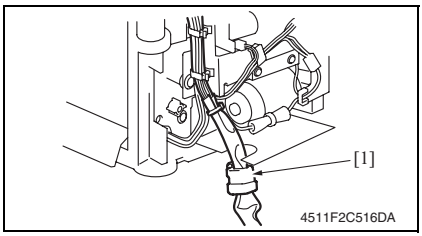

10. Remove the harness clamp [1] from the metal bracket.

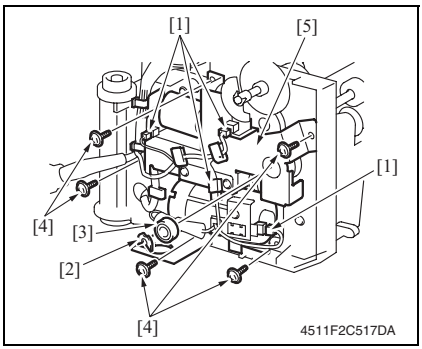

11. Remove the harness from the wire saddle.
12. Unplug four connectors [1].
13. Remove the C-ring [2], and remove the bearing [3].
14. Remove five screws [4], and remove the drive unit [5].

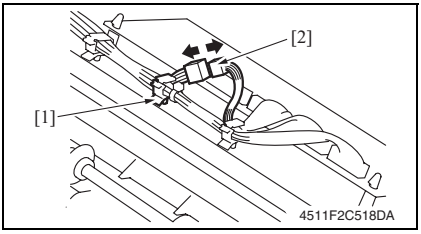

15. Remove the wire saddle [1], and unplug the connector [2].

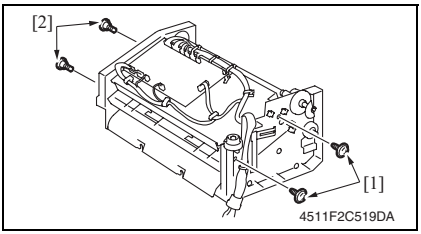

16. Remove two screws [1] and two shoulder screws [2].

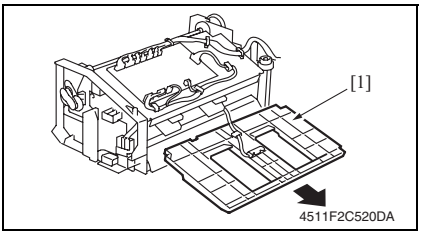

17. Remove the processing tray [1].

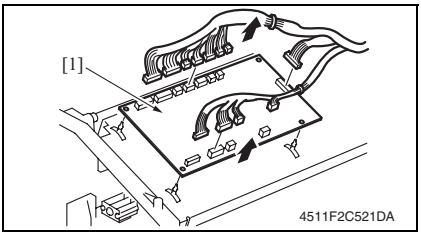

18. Unplug all the connectors on the main control board.

19. Remove the board support, and then remove the main control board [1].

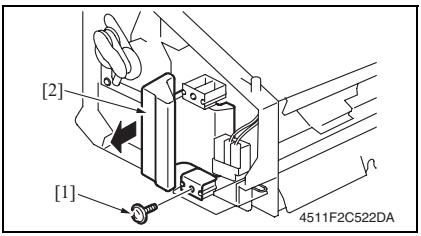

20. Remove the screw [1], and remove the lock release lever [2].

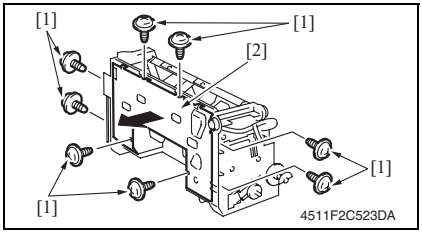

21. Remove eight screws [1], and remove the lower cover [2].

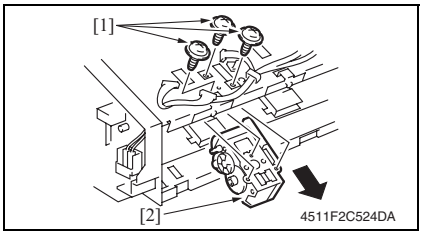

22. Remove the wire saddle and unplug the connector.

23. Remove three screws [1], and remove the clincher 1 [2].

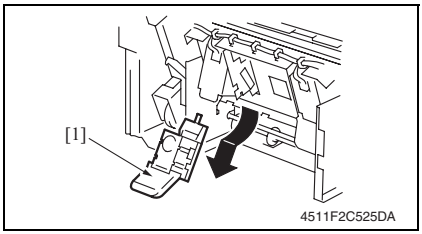

24. Remove the staple cartridge 1 [1].

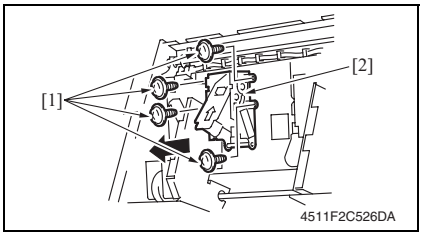

25. Remove four screws [1], and remove the stapler 1 [2].

NOTE

- **To replace clincher 2 and stapler 2, repeat steps 22 to 25.**

Precaution for clincher reinstallation

- **When the clincher is installed, the position of the stapler and the clincher will be misaligned. Be sure to perform the following adjustment.**

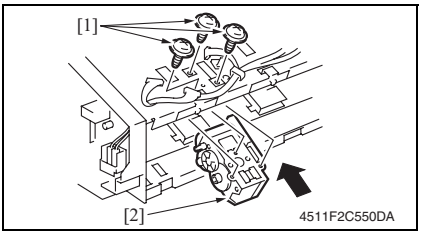

1. Use three screws [1] to temporary fix the clincher [2].

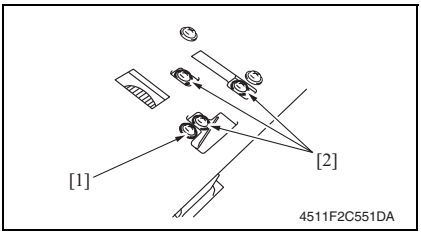

2. Loosen the screw [1] of the stopper.
3. Loosen three screws [2] of the clincher.

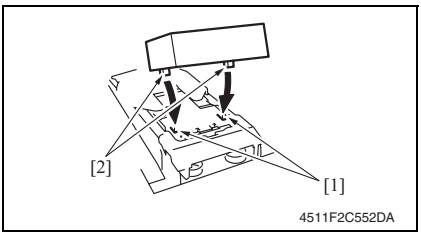

4. Aligning the protrusions of the jig [2] with the recesses in the stapler [1], fit the jig to the stapler.

NOTE

- **Make sure that the protrusions of the jig properly rest in the recesses.**

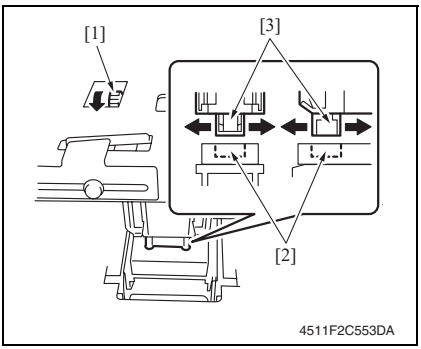

5. Turn the gear [1] of the clincher and then slide the clincher assy so that the protrusion of the clincher [3] fits into the recess in the jig [2].

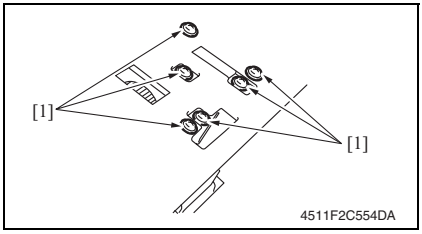

6. Tighten six screws [1].

NOTE

- **Turn the gear again and check to see that the protrusion of the clincher smoothly fits into the recess in the jig.**

7. Turn the gear and remove the jig.

4.3.7 In & out guide drive motor

1. Remove the saddle unit.
See P.7
2. Remove the paper output tray.
See P.5
3. Remove the front cover.
See P.5
4. Remove the rear cover.
See P.6
5. Remove the upper cover.
See P.6

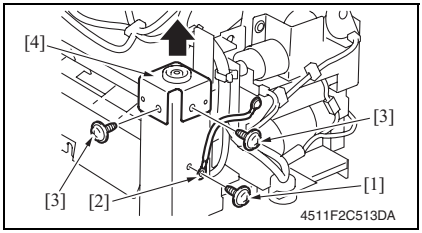

6. Remove the screw [1], and remove the ground wire [2].
7. Remove two screws [3], and remove the holder [4].

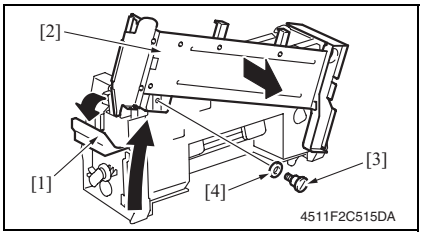

8. Release the lock release lever [1], and slide the saddle unit mounting plate [2].
9. Remove the shoulder screw [3] and the washer [4], and remove the saddle unit mounting plate [2].

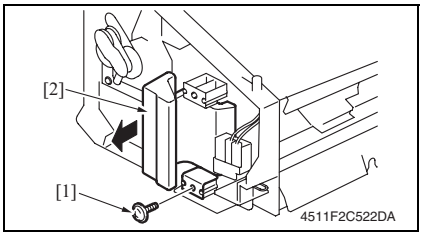

10. Remove the screw [1], and remove the lock release lever [2].

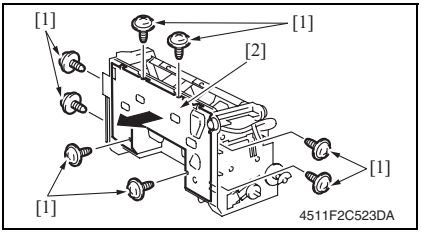

11. Remove eight screws [11], and remove the lower cover [2].

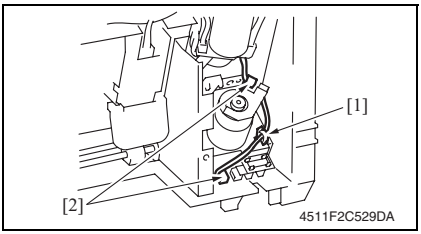

12. Remove the wire saddle [1], and unplug two connectors [2].

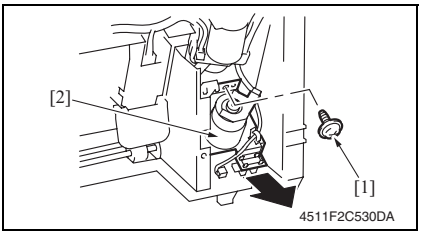

13. Remove the screw [1], and remove the in & out guide drive motor assy [2].

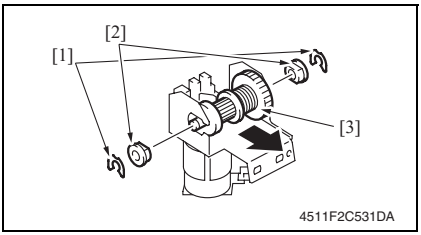

14. Remove two C-rings [1].
15. Remove two bushings [2], and remove the clutch gear assy [3].

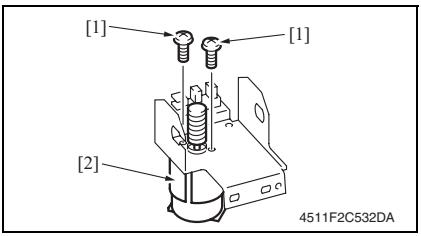

16. Remove two screws [1], and remove the in & out guide drive motor [2].

Precaution for in & out guide drive motor reinstallation

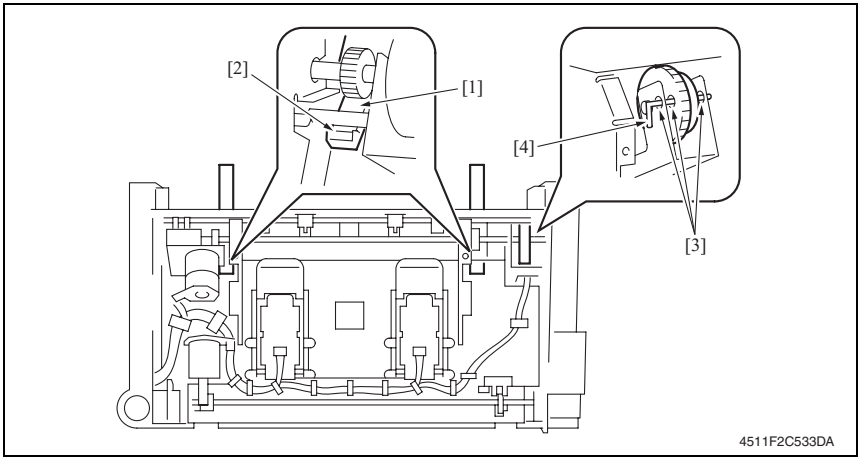

1. Press the two in & out guides [1] in and check that they touch the stopper [2] simultaneously.
2. Check that pins [4] can be inserted through the positioning holes [3] (3 holes) of the in & out guide sensor assy.
3. Use two screws to secure the in & out guide drive motor.

4.3.8 Crease roller

1. Remove the crease unit.

See P.9

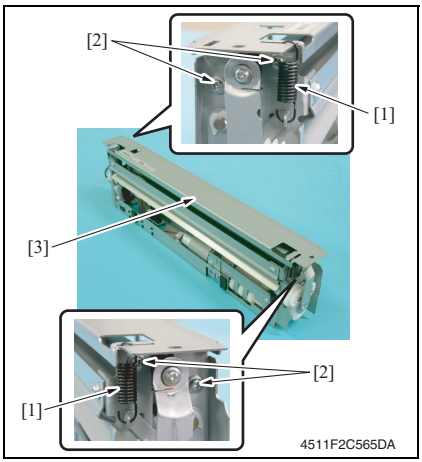

2. Remove two springs [1] and four screws [2], and remove the upper plate [3].

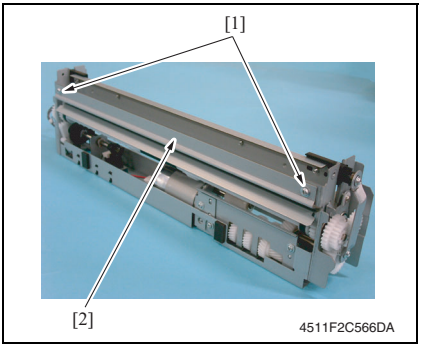

3. Remove two screws [1], and remove the guide plate [2].

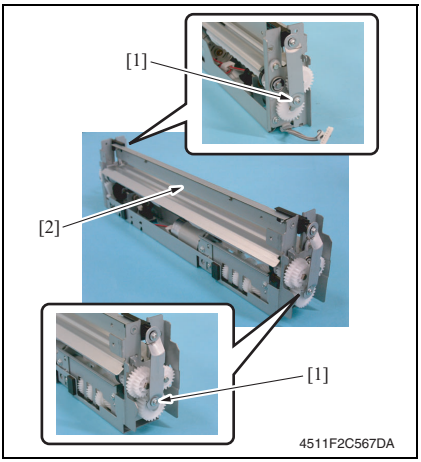

4. Remove two screws [1], and remove the chopper assy [2].

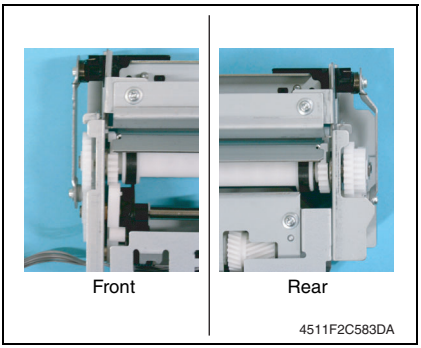

NOTE

- **Install the chopper assy in the direction shown in the left figure.**

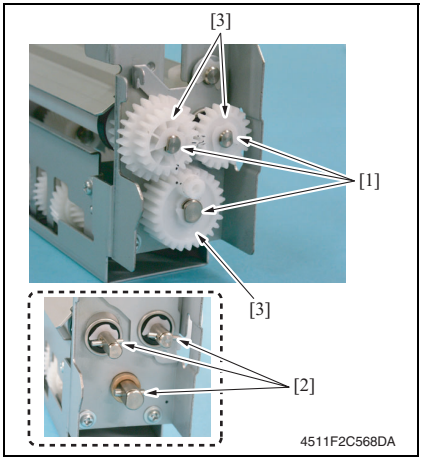

5. Remove three C-rings [1] and three pins [2], and remove three gears [3].

NOTE

- **Use care not to lose the pin.**

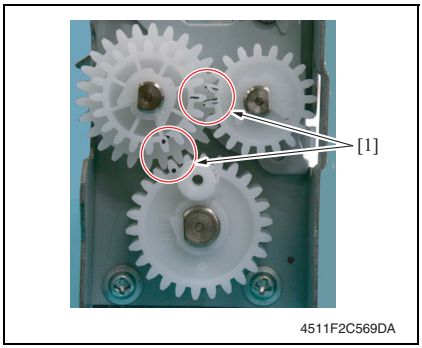

NOTE

- **Install the gear so that the mark [1] is aligned to the position shown in the left figure.**

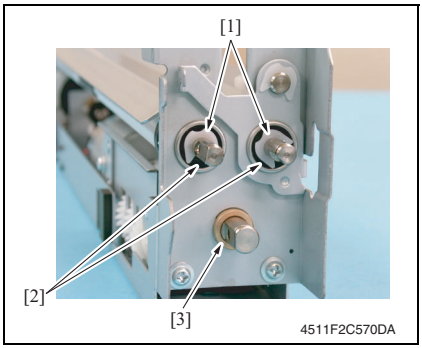

6. Remove three C-rings [1], and remove two bearings [2].
7. Remove the bushing [3].

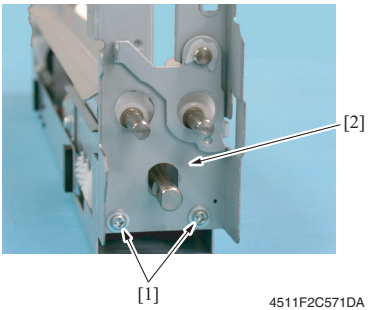

8. Remove two screws [1], and remove the rear holder [2].

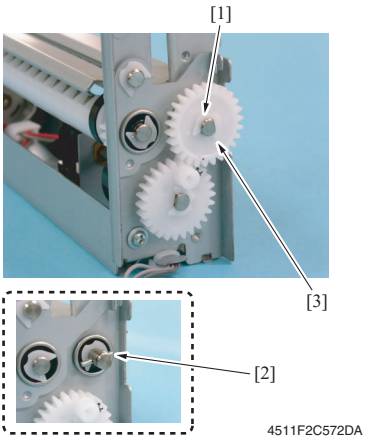

9. Remove the C-ring [1] and the pin [2], and remove the gear [3].

NOTE

- **Use care not to lose the pin.**

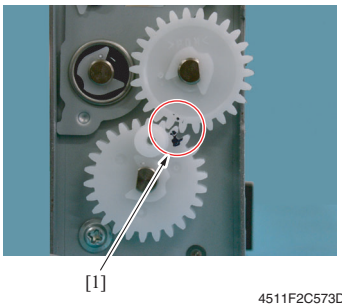

NOTE

- **Install the gear so that the mark [1] is aligned to the position shown in the left figure.**

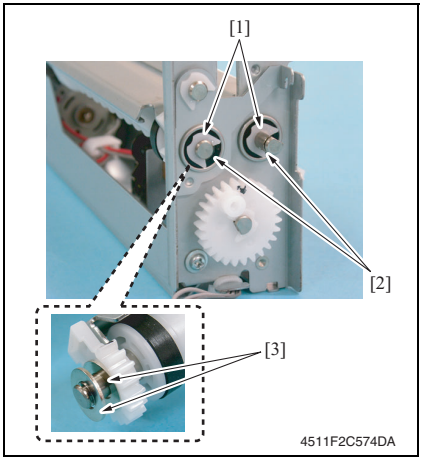

10. Remove two C-rings [1], two bearings [2] and two washers [3].

NOTE

- **Use care not to lose the washer.**

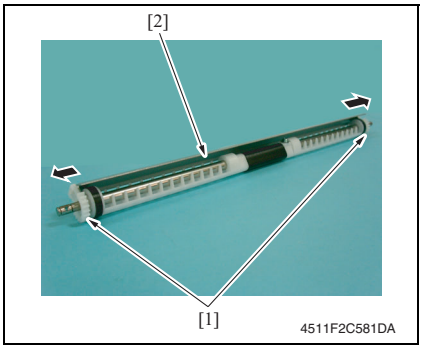

11. Remove two gears [1] of crease roller 1 assy, and remove the guide plate [2].

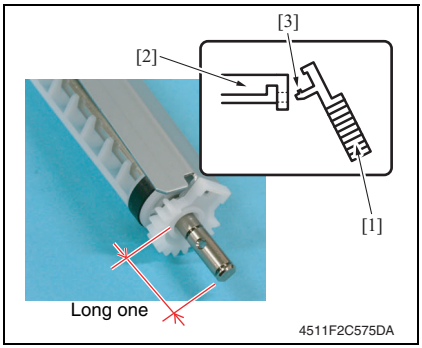

NOTE

- **When installing the gear [1] to the guide plate [2], insert the gear [1] at an angle and use care not to break the tabs [3].**
- **Install the guide plate as shown on the left.**

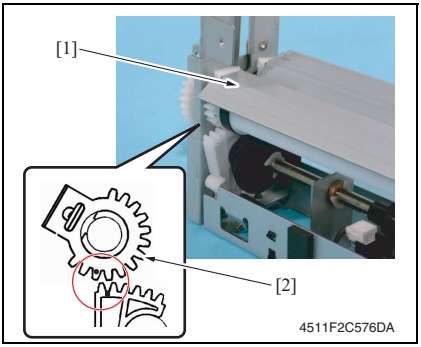

NOTE

- **When mounting the crease roller 1 assy [1], mount it so that the tally mark on the gear [2] for the crease roller 1 and the tally mark on the gear below will be next to each other with the one on the gear [2] being outer side.**

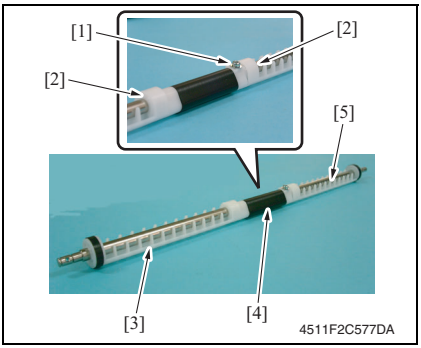

12. Remove the screw [1].
13. Remove two C-rings [2] and remove the crease roller A [3], B [4] and C [5].

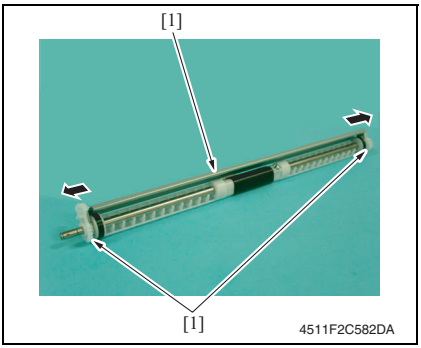

14. Remove two gears [1] of crease roller 2 assy, and remove the guide plate [2].

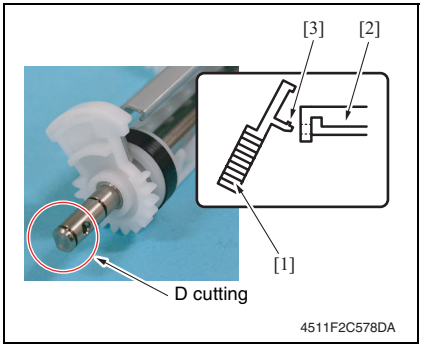

NOTE

- **When installing the gear [1] to the guide plate [2], insert the gear [1] at an angle and use care not to break the tabs [3].**
- **Install the gear and guide plate as shown on the left.**

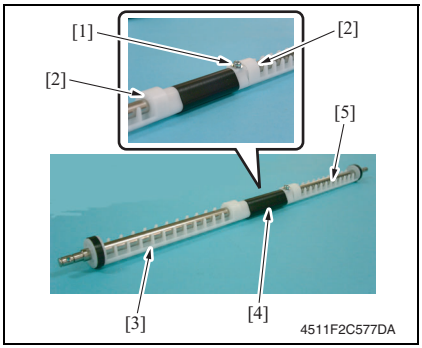

15. Remove the screw [1].
16. Remove two C-rings [2] and remove the crease roller A [3], B [4] and C [5].

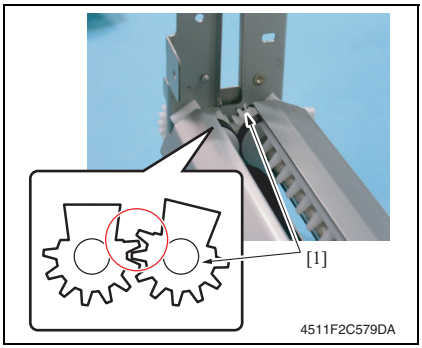

NOTE

- **When mounting the crease roller assy 2, mount it so that the gear [1] for the crease roller 2 will be over the gear for the cease roller 1 by one tooth.**

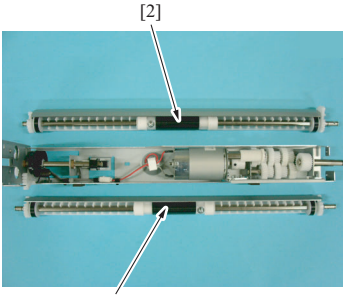

4511F2C580DA

NOTE

- **Use care to mount the crease roller assy 1 [1] and 2 [2] in the proper directions.**

Adjustment/Setting

5. How to use the adjustment section

- “Adjustment/Setting” contains detailed information on the adjustment items and procedures for this machine.
- Throughout this “Adjustment/Setting,” the default settings are indicated by “ ”.

Advance checks

Before attempting to solve the customer problem, the following advance checks must be made. Check to see if:

- The power supply voltage meets the specifications.
- The power supply is properly grounded.
- The machine shares the power supply with any other machine that draws large current intermittently (e.g., elevator and air conditioner that generate electric noise).
- The installation site is environmentally appropriate: high temperature, high humidity, direct sunlight, ventilation, etc.; levelness of the installation site.
- The original has a problem that may cause a defective image.
- The density is properly selected.
- The original glass, slit glass, or related part is dirty.
- Correct paper is being used for printing.
- The units, parts, and supplies used for printing (developer, PC drum, etc.) are properly replenished and replaced when they reach the end of their useful service life.
- Toner is not running out.

⚠ CAUTION

- **To unplug the power cord of the machine before starting the service job procedures.**
- **If it is unavoidably necessary to service the machine with its power turned ON, use utmost care not to be caught in the scanner cables or gears of the exposure unit.**
- **Special care should be used when handling the fusing unit which can be extremely hot.**
- **The developing unit has a strong magnetic field. Keep watches and measuring instruments away from it.**
- **Take care not to damage the PC drum with a tool or similar device.**
- **Do not touch IC pins with bare hands.**

6. Sensor check

6.1 Check procedure

- To allow sensors to be checked for operation easily and safely, data applied to the IC on the board can be checked on the panel with the main unit in the standby state (including a misfeed, malfunction, and closure failure condition).

A. Procedure

1. Display the Service Mode screen.

See P.304 of the main unit service manual.

2. Touch [State Confirmation].

3. Touch [Sensor Check].

4. Touch [4].

6.2 Sensor check list

6.2.1 Sensor check screen

- This is only typical screen which may be different from what are shown on each individual main unit.

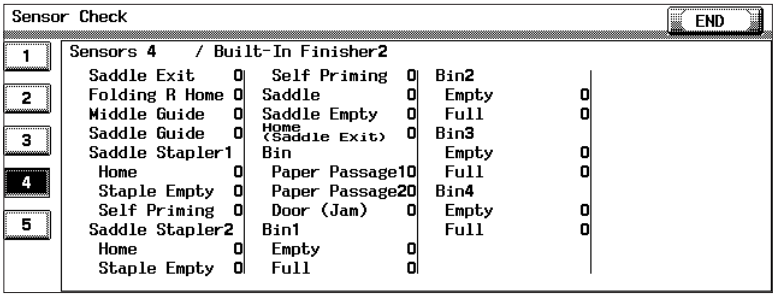

4511F3E521DA

6.2.2 Sensor check list

A. Sensors 4

Symbol	Panel display		Part/Signal name	Operation characteristics/Panel display	
				1	0
PC20-SK	Sensors 4	Saddle exit	Saddle exit sensor	Paper present	Paper not present
PC22-SK		Folding R home	Crease roller home position sensor	Paper present	Paper not present
S5		Middle guide	Middle guide switch	Open	Closed
PC24-SK		Saddle guide	Layable guide home sensor	Blocked	Unblocked
—		Saddle stapler 1			
—		Home	Staple Home Position Sensor 1	Blocked	Unblocked
—		Staple empty	Staple Empty Detection Sensor 1	Blocked	Unblocked
—		Self priming	Self-Priming Sensor 1	Blocked	Unblocked
—		Saddle stapler 2			
—		Home	Staple Home Position Sensor 2	Blocked	Unblocked
—		Staple empty	Staple Empty Detection Sensor 2	Blocked	Unblocked
—		Self priming	Self-Priming Sensor 2	Blocked	Unblocked
S4-SK		Saddle	Saddle interlock switch	Open	Closed
PC21-SK		Saddle empty	Saddle tray empty sensor	Paper present	Paper not present
PC18-SK		Home (Saddle exit)	Saddle exit roller home position sensor	Paper present	Paper not present

7. Finisher operations

7.1 Entering Finisher Check

1. Display the Service Mode screen.

See P.304 of the main unit service manual.

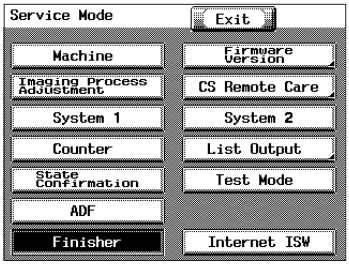

4511F3E522DA

2. Touch [Finisher Check].

3. Touch the item one wants.

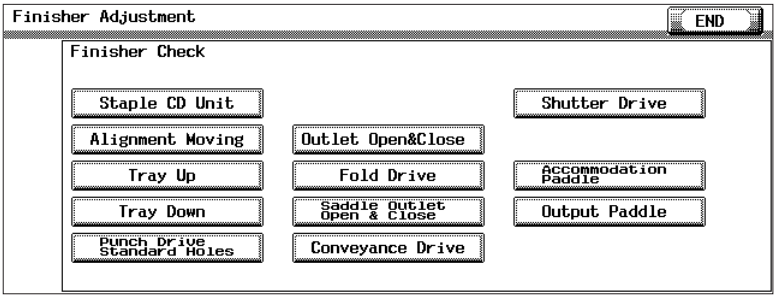

4511F3E524DA

7.2 Finisher Check modes

A. Creasing unit movement mode

- Performs the creasing drive once.
  → Raises the layable guide.
  → Stops after the predetermined time.
  → Lowers the layable guide.
  → The operation is finished.

B. Saddle Unit exit open/close mode

- Opens the saddle exit after the saddle exit is opened and closed.
  → Stops after the predetermined time.
  → The saddle exit closes.
  → The saddle in & out guide advances.
  → Stops after the predetermined time.
  → The saddle in & out guide retracts.
  → The operation is finished.

C. Transport drive mode

- Transport drive is performed for the predetermined time. (Performs the same transport drive as the pre-drive with the high speed of the connected copier.)
  → Drives the entrance motor (M1).
  → Drives the transport motor/1 (M2).
  → Drives the transport motor/2 (M3).
  → Drives the exit motor (M4).
  → The operation is finished.
- If the mail bin kit MT-501 is installed, the mail bins are also driven.
- If the saddle kit SD-503 is also installed, the saddle transport motor (M8-SK) is also driven.

7.3 Fold & Staple Pos. Adjustment

NOTE

Make this adjustment after any of the following procedures has been performed.

- **When the crease unit has been replaced.**
- **When a deviation occurs in the crease.**
- **When fold angle adjustment has been made.**

1. Make a copy in the crease mode. (A3 size)

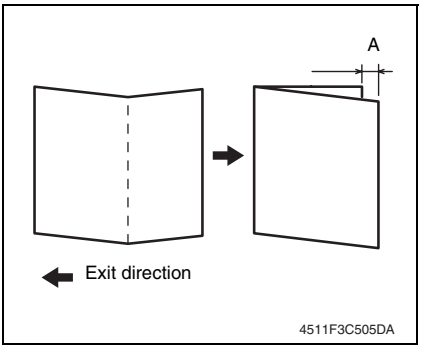

2. Fold the copy fed out along the crease.

3. Check the crease for deviation (Measure width A).
Specification: 0 ± 1.5 mm

4. When the width A does not fall within the specified value, conduct the following adjustment.

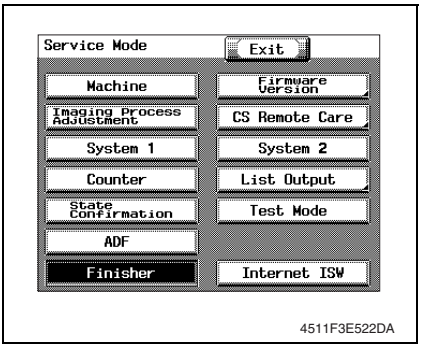

5. Display the Service Mode screen.
See P.304 of the main unit service manual.

6. Touch [Finisher].

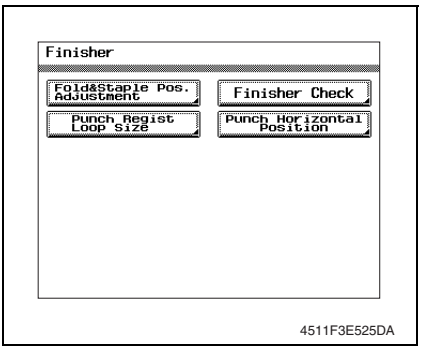

7. Touch [Fold & Staple Pos.Adjustment].

8. Touch [Fold Position Adjustment].

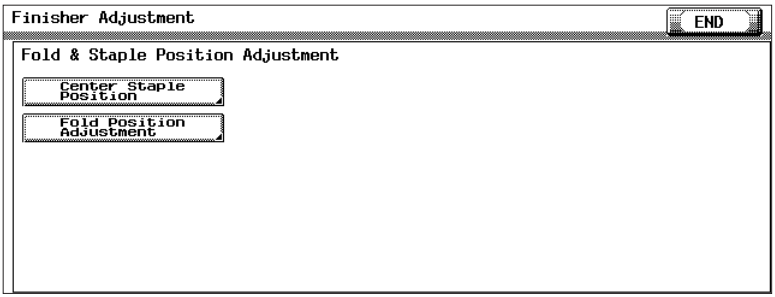

4511F3E526DA

9. Touch [A3] and then touch [Normal Paper].

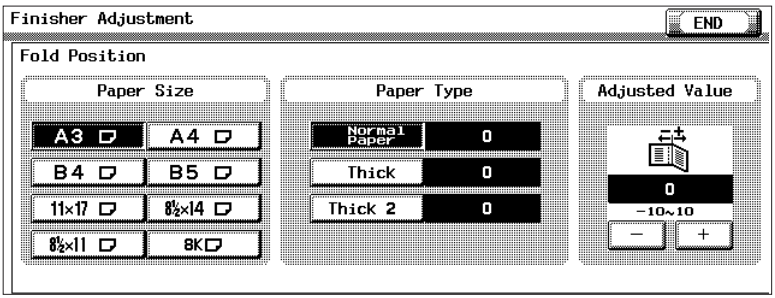

4511F3E528DA

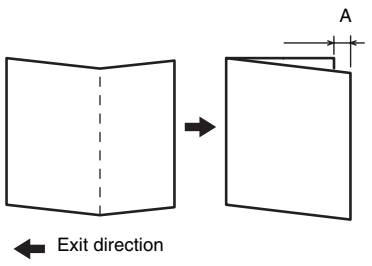

4511F3C505DA

- If the fold is offset as shown on the left.

10. Touch [-] and set the appropriate numeric value.
Adjustment range: 0 to -10
(1 increment 0.5 mm)

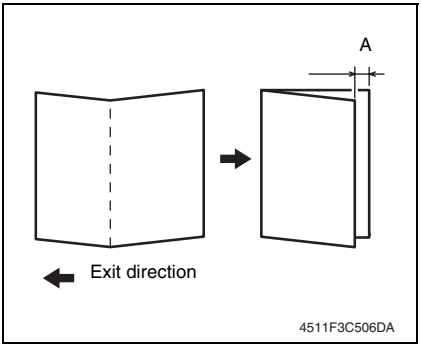

- If the fold is offset as shown on the left.

11. Touch [+] and set the appropriate numeric value.
Adjustment range: 0 to +10
(1 increment 0.5 mm)

12. Touch [END].
13. Make another copy, and check the deviation.
14. Touch [Exit] on the Service Mode screen.
15. Turn OFF the main power switch, wait for 10 sec., then turn the switch ON.

7.4 Center Staple Position Adjustment

NOTE
Make this adjustment after any of the following procedures has been performed.
- **When staple unit has been replaced.**
- **When center staple position is misaligned.**
- **When center staple angle adjustment has been made.**

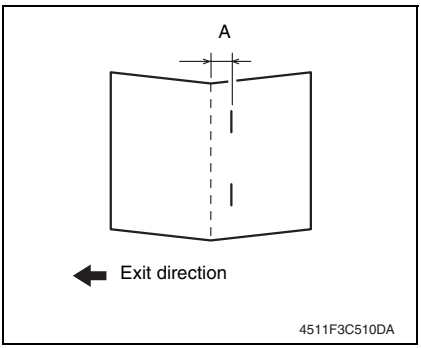

1. Load a five-page A4 document in the document feed tray.
2. Select the center staple mode and make a copy. (A3 Size)
3. Check the staple position for deviation from the crease (Measure width A).
Specification: 0 ± 1.5 mm
4. When the width A does not fall within the specified value, conduct the following adjustment.

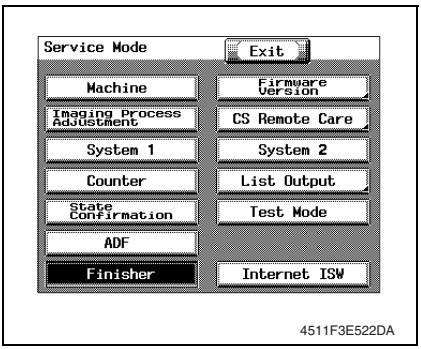

5. Display the Service Mode screen.
See P.304 of the main unit service manual.
6. Touch [Finisher].

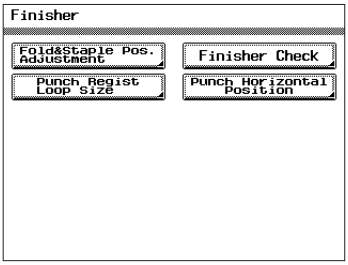

4511F3E525DA

7. Touch [Fold & Staple Pos.Adjustment].

8. Touch [Center Staple Position].

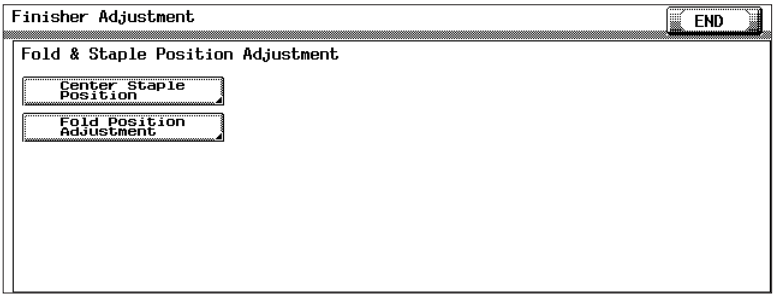

4511F3E526DA

9. Touch [A3] and then touch [Normal Paper].

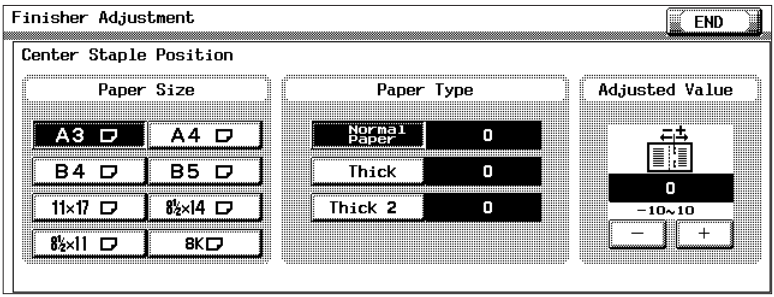

4511F3E527DA

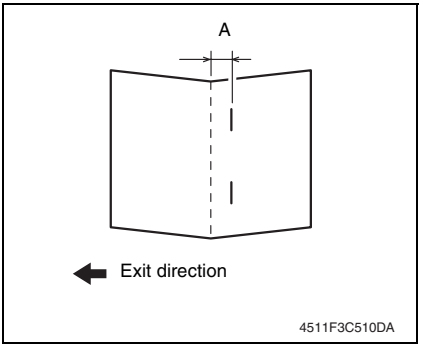

- If the fold is offset as shown on the left.

10. Touch [-] and set the appropriate numeric value.
Adjustment range: 0 to -10
(1 increment 0.5 mm)

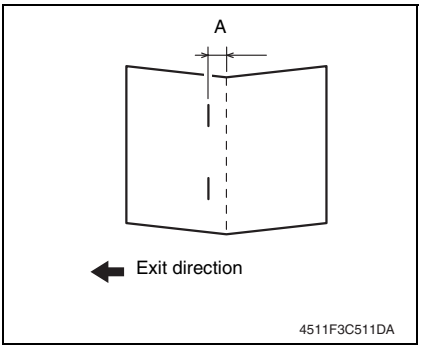

- If the fold is offset as shown on the left.

11. Touch [+] and set the appropriate numeric value.
Adjustment range: 0 to +10
(1 increment 0.5 mm)

12. Touch [END].
13. Make another copy, and check the deviation.
14. Touch [Exit] on the Service Mode screen.
15. Turn OFF the main power switch, wait for 10 sec., then turn the switch ON.

8. Mechanical adjustment

8.1 Fold Angle Adjustment

NOTE

Make this adjustment after any of the following procedures has been performed.

- **When the crease unit has been replaced.**
- **When a slant occurs in the crease.**

1. Make a copy in the crease mode. (A3 size)

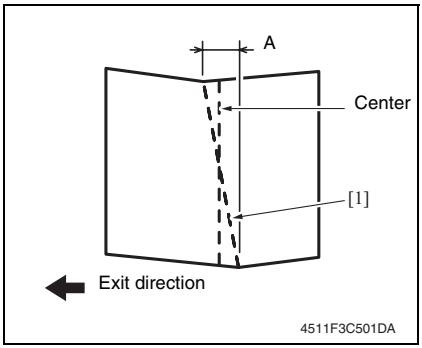

2. Fold the output paper along the crease [1].

3. Fold the output paper and half and measure the width A of the paper.
Specification: 0 ± 1.5 mm

4. If the fold position is slanted as shown on the left, make the following adjustment.

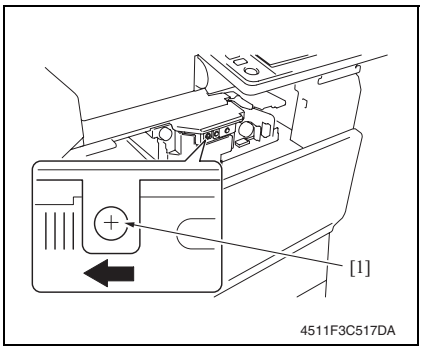

5. Open the front door, loosen the adjustment screw [1], and move the crease unit to the left to make the adjustment.
Graduated in 1-mm divisions

6. If the fold position is slanted opposite to the figure of step 4, move the crease unit to the right to make the adjustment.

7. Make another copy and check the fold position.

8.2 Center Staple Angle Adjustment

NOTE

Make this adjustment after any of the following procedures has been performed.

- **When staple unit has been replaced.**
- **When a slant occurs in the position of the center staple.**

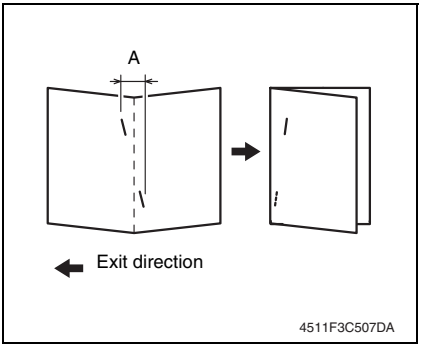

1. Load a five-page A4 document in the document feed tray.
2. Select the center staple mode and make a copy. (A3 Size)
3. Check the staple position for deviation from the crease (Measure width A).
   Specification: 0 ± 1.5 mm
4. If the staple position is slanted as shown on the left, make the following adjustment.

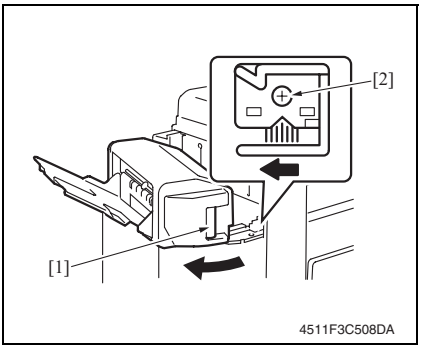

5. Release the lock release lever [1] of the saddle unit.
6. Loosen the adjustment screw [2] and move the lock lever to the left to make the adjustment.
   - If the staple position is slanted opposite to the figure of step 2, move the lock lever to the right to make the adjustment.
7. Make another copy and check the staple position.

Troubleshooting

9. Jam display

9.1 Misfeed display

- When misfeed occurs, message, misfeed location “Blinking” and paper location “Lighting” are displayed on the touch panel of the main unit.

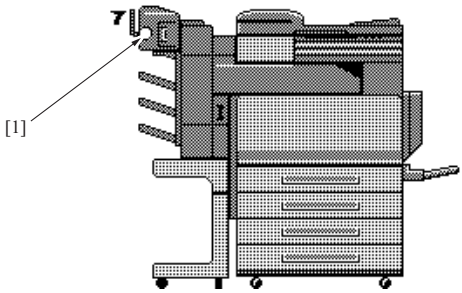

Display	Code	Misfeed location	Misfeed processing location	Action
[1]	7503	Paper bundle exit misfeed	Front door	P.39
	7505	Staple unit 1 misfeed	Saddle cover	P.40
	7506	Staple unit 2 misfeed	Saddle cover	
	7507	Creasing section misfeed	Front door	P.41

9.2 Sensor layout

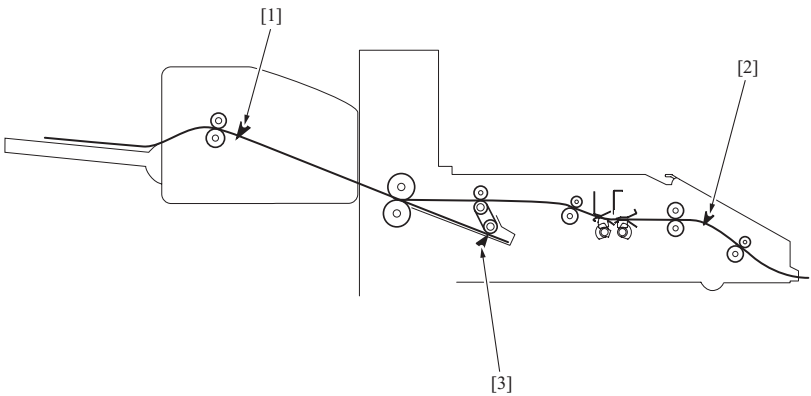

[1]	Saddle exit sensor	PC20-SK
[2]	Entrance sensor	PC1
[3]	Storage tray detect sensor	PC3

9.3 Solution

9.3.1 Initial check items

- When a paper misfeed occurs, first perform the following initial check items.

Check item	Action
Does paper meet product specifications?	Replace paper.
Is the paper curled, wavy, or damp?	See “Solution when paper curl occurs” on P.38.
Is a foreign object present along the paper path, or is the paper path deformed or worn?	Clean the paper path and replace if necessary.
Are rolls/rollers dirty, deformed, or worn?	Clean or replace the defective roll/roller.
Are the edge guide and trailing edge stop at the correct position to accommodate the paper?	Set as necessary.
Are the actuators operating correctly?	Correct or replace the defective actuator.

9.3.2 Solution when paper curl occurs

Step	Check items/actions		
1	Turn over the stacked paper in the paper tray.	OK	—
		NG	Go to step 2.
2	Does paper curl occur just after a warm-up has been completed or the sleep mode has been turned OFF?	YES	Go to step 3.
	Does paper curl occur under normal conditions (under conditions other than those mentioned above)?	YES	Go to step 5.
3	*1.* Call the Service Mode to the screen. *2.* Select [Machine] → [Change Warm Up Time]. *3.* Change the setting to [Mode2]. See P.310 of the main unit service manual.	OK	—
		NG	Go to step 4.
4	*1.* Call the Service Mode to the screen. *2.* Select [Machine] → [Change Warm Up Time]. *3.* Change the setting to [Mode3]. See P.310 of the main unit service manual.	—	—
5	*1.* Call the Service Mode to the screen. *2.* Select [Machine] → [Fusing Temperature]. *3.* Select a paper type. *4.* Change the temperature of Heater Roller to [-10 °C]. See P.311 of the main unit service manual.	OK	—
		NG	Go to step 6
6	*1.* Call the Service Mode to the screen. *2.* Select [Machine] → [Fusing Temperature]. *3.* Select a paper type. *4.* Change the temperature of Heater Roller to [-20 °C]. See P.311 of the main unit service manual.	—	—

9.3.3 Paper bundle exit misfeed

A. Detection timing

Type	Description
Paper bundle misfeed detection	The storage tray detecting sensor (PC3) is not turned OFF even after the set period of time has elapsed after the exit motor (M4) is energized.
	The saddle exit sensor (PC20-SK) is not turned ON even after the set period of time has elapsed after the exit motor (M4) is energized.
	The saddle exit sensor (PC20-SK) is not turned OFF even after the set period of time has elapsed after the saddle exit sensor (PC20-SK) is turned ON.

B. Action

Relevant electrical parts	
Storage tray detect sensor (PC3) Saddle exit sensor (PC20-SK) Exit motor (M4) Saddle exit motor (M8-SK)	Main control board (PWB-C SK)

Step	Action	WIRING DIAGRAM	
		Control signal	Location (Electrical component)
1	Initial check items	—	—
2	PC3 sensor check	FSCB PJ14FSCB-8 (ON)	FS-514 C-12
3	PC20-SK sensor check	PWB-C SK PJ19C SK-8 (ON)	SD-503 B-2
4	M4 operation check	FSCB PJ10FSCB-5 to 8	FS-514 C-3
5	M8-SK operation check	PWB-C SK PJ4C SK-1 to 2	SD-503 G-6
6	Change PWB-C SK	—	—

9.3.4 Staple unit 1 misfeed/Staple unit 2 misfeed

A. Detection timing

Type	Description
Staple unit misfeed detection	The staple home position sensor in the staple unit is not turned ON even after the set period of time has elapsed after the staple motor rotates forward, and then the staple motor rotates backward, and the staple home position sensor in the staple unit is turned ON within the set period of time.

B. Action

Relevant electrical parts	
Staple unit 1 Staple unit 2	Main control board (PWB-C SK)

Step	Action	WIRING DIAGRAM	
		Control signal	Location (Electrical component)
1	Initial check items	—	—
2	Drive coupling section check	—	—
3	Sensor check	—	—
4	Change staple unit 1	—	—
5	Change staple unit 2	—	—
6	Change PWB-C SK	—	—

9.3.5 Creasing section misfeed

A. Detection timing

Type	Description
Creasing section misfeed detection	The entrance sensor (PC1) is not turned ON even after the set period of time has elapsed after the entrance motor (M1) is energized (beginning of backward rotation operation).
	The entrance sensor (PC1) is not turned OFF even after the set period of time has elapsed after the entrance motor (M1) is energized (beginning of forward rotation operation).

B. Action

Relevant electrical parts	
Entrance sensor (PC1) Entrance motor (M1)	Main control board (PWB-C SK)

Step	Action	WIRING DIAGRAM	
		Control signal	Location (Electrical component)
1	Initial check items	—	—
2	PC1 sensor check	FSCB PJ19FSCB-11 (ON)	FS-514 C-7
3	M1 operation check	FSCB PJ9FSCB-1 to 4	FS-514 C-6 to 7
4	Change PWB-C SK	—	—

10. Malfunction code

10.1 Trouble code

- The machine's CPU performs a self-diagnostics function that, on detecting a malfunction, gives the corresponding malfunction code and maintenance call mark on the touch panel.

Code	Item	Description
C11A2	Saddle exit roller pressure/retraction failure	• The saddle exit roller home position sensor (PC18-SK) is not turned ON even after the set period of time has elapsed after the saddle exit open/close motor (M9-SK) is energized (beginning of pressure operation). • The saddle exit roller home position sensor (PC18-SK) is not turned OFF even after the set period of time has elapsed after the saddle exit open/close motor (M9-SK) is energized (beginning of retraction operation).
C11A4	Saddle exit motor failure	The lock signal is detected after the set period of time has elapsed after the saddle exit motor (M8-SK) is energized.
C11A5	Saddle in & out guide motor failure	• The in & out guide home sensor (PC23-SK) is not turned OFF even after the set period of time has elapsed after the in & out guide motor (M13-SK) is energized (beginning of advancing operation). • The in & out guide home sensor (PC23-SK) is not turned ON even after the set period of time has elapsed after the in & out guide motor (M13-SK) is energized (beginning of retracting operation).
C11A6	Saddle layable guide drive failure	• The layable guide home sensor (PC24-SK) is not turned ON even after the set period of time has elapsed after the layable guide motor (M14-SK) is energized (beginning of return operation to predetermined position). • The layable guide home sensor (PC24-SK) is not turned OFF even after the set period of time has elapsed after the layable guide motor (M14-SK) is energized (beginning of return operation to predetermined position).
C11B5	Side staple 1 drive failure	Home position sensor 1 is not turned OFF even after the set period of time has elapsed after saddle staple motor 1 is energized (beginning of staple operation).
C11B6	Side staple 2 drive failure	Home position sensor 2 is not turned OFF even after the set period of time has elapsed after saddle staple motor 2 is energized (beginning of staple operation).
C11D0	Crease motor drive failure	• The crease roller home position sensor (PC22-SK) is not turned OFF even after the set period of time has elapsed after the crease motor (M10-SK) is energized (beginning of backward rotation operation). • The crease roller home position sensor (PC22-SK) is not turned ON even after the set period of time has elapsed after the crease motor (M10-SK) is energized (beginning of forward rotation operation).

10.2 Solution

10.2.1 C11A2: Saddle exit roller pressure/retraction failure

Relevant electrical parts	
Saddle exit open/close motor (M9-SK) Saddle exit roller home position sensor (PC18-SK)	Main control board (PWB-C SK)

Step	Action	WIRING DIAGRAM	
		Control signal	Location (Electrical component)
1	Check the M9-SK connector for proper connection and correct as necessary.	—	—
2	Check M9-SK for proper drive coupling and correct as necessary.	—	—
3	M9-SK operation check	PWB-C SK PJ4C SK-6 to 7	SD-503 G-5 to 6
4	PC18-SK sensor check	PWB-C SK PJ9C SK-6 (ON)	SD-503 B-2
5	Change PWB-C SK	—	—

10.2.2 C11A4: Saddle exit motor failure

Relevant electrical parts	
Saddle exit motor (M8-SK)	Main control board (PWB-C SK)

Step	Action	WIRING DIAGRAM	
		Control signal	Location (Electrical component)
1	Check the M8-SK connector for proper connection and correct as necessary.	—	—
2	Check M8-SK for proper drive coupling and correct as necessary.	—	—
3	M8-SK operation check	PWB-C SK PJ4C SK-1 to 2	SD-503 G-6
4	Change PWB-C SK	—	—

10.2.3 C11A5: Saddle in & out guide motor failure

Relevant electrical parts	
In & out guide motor (M13-SK) In &out guide home sensor (PC23-SK)	Main control board (PWB-C SK)

Step	Action	WIRING DIAGRAM	
		Control signal	Location (Electrical component)
1	Check the M13-SK connector for proper connection and correct as necessary.	—	—
2	Check M13-SK for proper drive coupling and correct as necessary.	—	—
3	M13-SK operation check	PWB-C SK PJ4C SK-4 to 5	SD-503 G-6
4	PC23-SK sensor check	PWB-C SK PJ10C SK-3 (ON)	SD-503 B-2 to 3
5	Change PWB-C SK	—	—

10.2.4 C11A6: Saddle layable guide drive failure

Relevant electrical parts	
Layable guide motor (M14-SK) Layable guide home sensor (PC24-SK)	Main control board (PWB-C SK)

Step	Action	WIRING DIAGRAM	
		Control signal	Location (Electrical component)
1	Check the M14-SK connector for proper connection and correct as necessary.	—	—
2	Check M14-SK for proper drive coupling and correct as necessary.	—	—
3	M14-SK operation check	PWB-C SK PJ4C SK-8 to 9	SD-503 G-5
4	PC24-SK sensor check	PWB-C SK PJ10C SK-6 (ON)	SD-503 B-3
5	Change PWB-C SK	—	—

10.2.5 C11B5: Side staple 1 drive failure

10.2.6 C11B6: Side staple 2 drive failure

Relevant electrical parts	
Staple unit 1 Staple unit 2	Main control board (PWB-C SK)

Step	Action	WIRING DIAGRAM	
		Control signal	Location (Electrical component)
1	Check the staple units 1 and 2 connectors for proper connection and correct as necessary.	—	—
2	Check staple units 1 and 2 for proper drive coupling, and correct as necessary.	—	—
3	Staple units 1 and 2 operation check	—	—
4	Change staple units 1 and 2	—	—
5	Change PWB-C SK	—	—

10.2.7 C11D0: Crease motor drive failure

Relevant electrical parts	
Crease motor (M10-SK) Crease roller home position sensor (PC22-SK)	Main control board (PWB-C SK)

Step	Action	WIRING DIAGRAM	
		Control signal	Location (Electrical component)
1	Check the M10-SK connector for proper connection and correct as necessary.	—	—
2	Check M10-SK for proper drive coupling and correct as necessary.	—	—
3	M10-SK operation check	PWB-C SK PJ3C SK-1 to 2	SD-503 C-7
4	PC22-SK sensor check	PWB-C SK PJ2C SK-3 (ON)	SD-503 C-7
5	Change PWB-C SK	—	—

Blank Page

KONICA MINOLTA

KONICA MINOLTA

PARTS GUIDE MANUAL

MARCH 2006

bizhub C300/bizhub C352

9J06

KONICA MINOLTA BUSINESS TECHNOLOGIES, INC.

INFORMATION FOR PARTS GUIDE MANUAL

To find correct Parts No., refer to the “HOW TO MAKE THE BEST USE OF THIS MANUAL” in the following page.

HOW TO MAKE THE BEST USE OF THIS MANUAL

1 When you order, please check the proper figures beforehand that are on Our Parts Guide Manual, and order with the appropriate figures.

2 For screws, Nuts, Washers, retaining rings and Pins which are used in this model, one letter is shown on the Standard parts column of Parts list and exploded diagrams.

3 In order to maintain safety of the product, some specific parts composed of this product are set up as "essential safety parts".

4 The assigned parts number for the "essential safety parts" is indicated as "SP00-****".
When replacing these parts, follow precautions for disassembling and installing which are listed in the Service Manual.
Do not use any parts that are not set up as

5 ♣ means that there are exclusive parts for each destination.
Please check the appropriate destination when you order.

6 Revision Mark
Marked as ▲ on the illustration shows that the revision has been made.

7 All rights reserved. (any reprints or quotations are prohibited.)
Use of this parts guide manual should be strictly supervised to avoid disclosure of confidential information.

パーツガイドマニュアルのご案内

サービス部品をご発注の際には、下記に示す “パーツガイドマニュアルの活用にあたって” をご参照の上、正しい部品番号にてお願い致します。

パーツガイドマニュアルの活用にあたって

1 部品発注の際には、掲載されている部品番号の桁数を確認し、掲載されている桁数で発注願います。

2 この製品に使用されているネジ、ナット、ワッシャー、止め輪、ピンなどは、リストの右側の Standard parts 欄に a,b,c,……で表示し、イラストにも a,b,c,……表示してあります。

3 製品の安全性を維持する為に、製品に使用される特定の部品を「重要保安部品」として設定しています。

4 重要保安部品の部品番号は、″SP00-****″ と記載されていますので、部品交換時は、サービスマニュアル記載の分解・組み立ての注意事項に従って作業をして下さい。
また、指定以外の部品は一切使用しないで下さい。

5 本文に ♣ が表示されている部品は、仕向け地毎に専用部品がある事を意味しています。
オーダーされる時は、仕向け地を確認して下さい。

6 改訂記号について
イラスト上に▲印が表示されている部分は、改訂された事を表します。

7 版権所有 （無断転載及び無断引用の禁止）
本パーツガイドマニュアルについては、機密保持等その扱いには十分注意して下さい。万一取り扱いを誤った場合には、法律で処罰されることがあります。

03/06/2005

SYSTEM OUTLINE

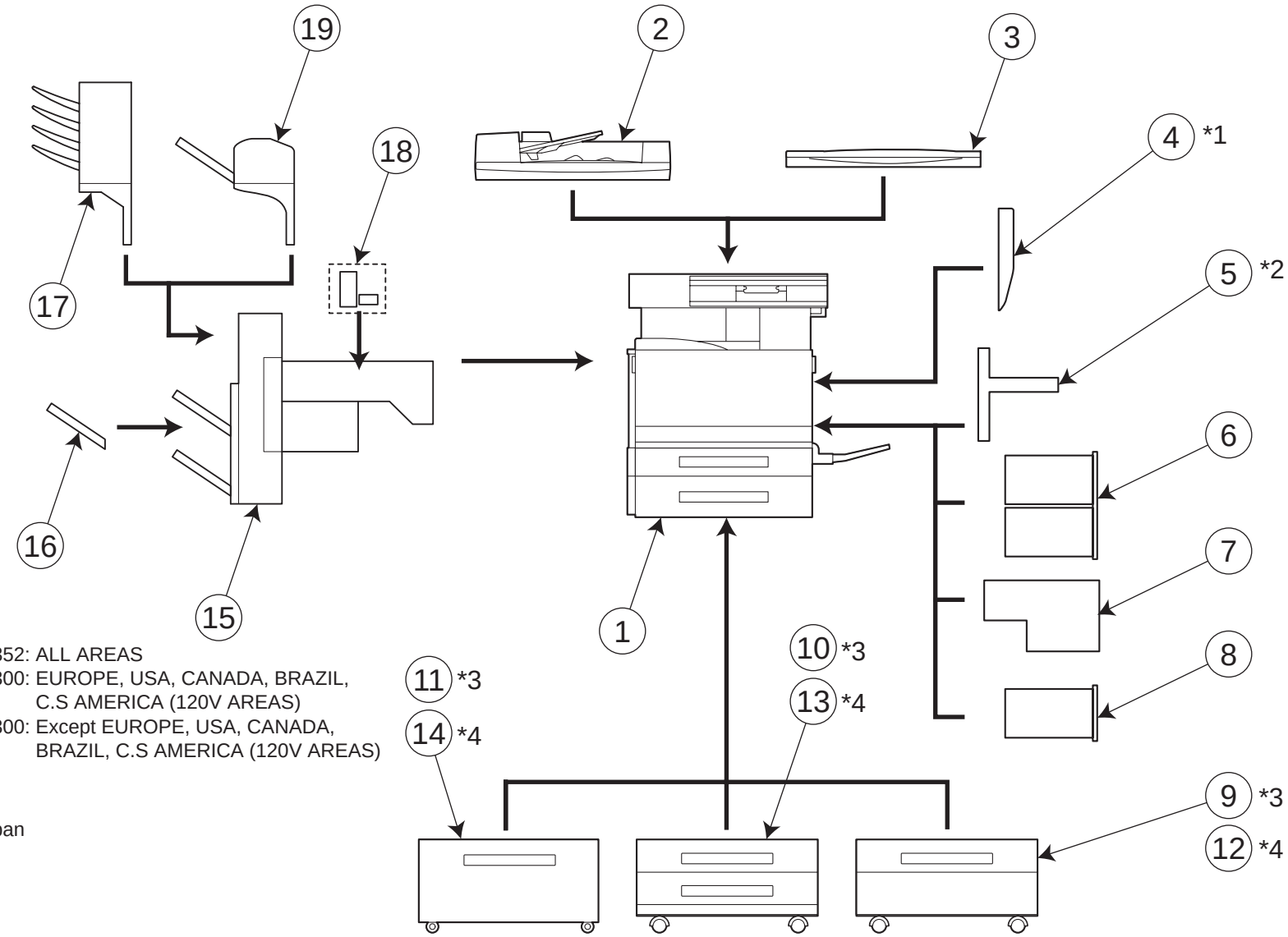

*1
Standard for bizhub C352: ALL AREAS
bizhub C300: EUROPE, USA, CANADA, BRAZIL, C.S AMERICA (120V AREAS)
Optional for bizhub C300: Except EUROPE, USA, CANADA, BRAZIL, C.S AMERICA (120V AREAS)

*2
Standard for Japan
Optional for except Japan

*3
Except Europe

*4
Europe only

GENERAL CONTENTS

No.	Description	Model
1	DIGITAL MFP COLOR	bizhub C300/bizhub C352
2	DOCUMENT FEEDER	DF-608
3	OTHER OPTION	OC-501
4	DUPLEX	AD-503
5	OTHER OPTION	MK-706
6	FAX CONTROLLER	FK-502
7	OTHER OPTION	IC-406
8	OTHER OPTION	VI-503
9	PAPER FEEDER	PC-103
10	PAPER FEEDER	PC-203
11	PAPER FEEDER	PC-403
12	PAPER FEEDER	PC-103
13	PAPER FEEDER	PC-203
14	PAPER FEEDER	PC-403
15	SORTER/FINISHER	FS-514
16	OTHER OPTION	OT-601
17	SORTER/FINISHER	MT-501
18	PUNCH UNIT	PK-510
19	SORTER/FINISHER	SD-503

DIAGRAM OF MAIN PARTS SECTION

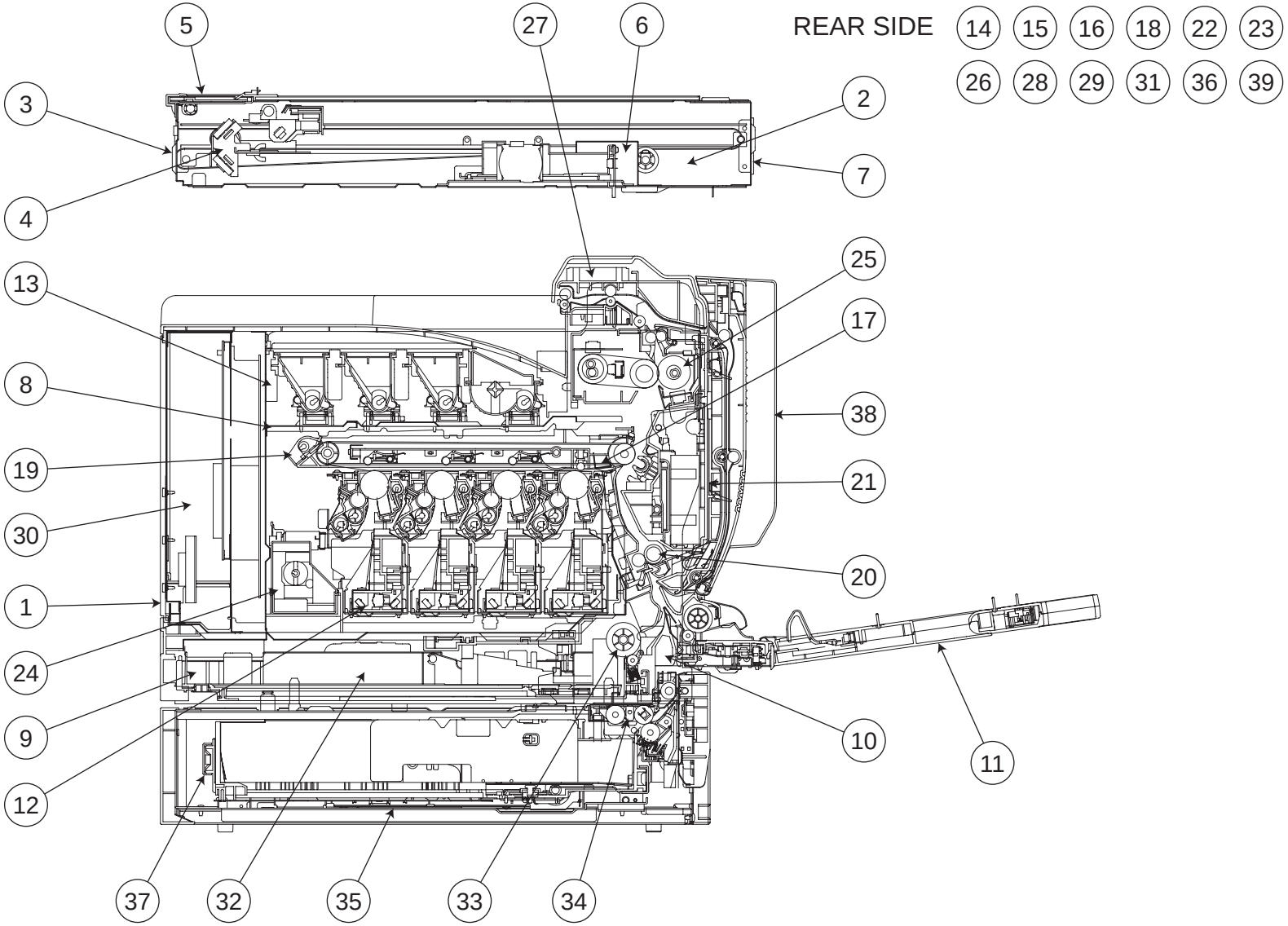

CONTENTS

No.	DESCRIPTION	名称	PAGE No.
1	EXTERNAL PARTS	外装部	P1
2	CONTROL PANEL	操作パネル	P2
3	IR COVER	Ｉ Ｒ カバー	P3
4	SCANNER DRIVE SECTION	スキャナ駆動	P4 P5
5	GLASS MOVEMENT SECTION	ガラス移動部	P6
6	OPTICAL SECTION	光学部	P7
7	IR FRAME	Ｉ Ｒ フレーム	P8
8	MAIN FRAME	メインフレーム	P9
9	INNER COVER SECTION	2 次カバー	P10
10	MPT PAPER TAKE-UP SECTION	Ｍ Ｐ Ｔ 給紙部	P11
11	MANUAL FEED SECTION	手差し給紙部	P12 P13 P14
12	P/H FRAME SECTION	Ｐ ／ Ｈ フレーム	P15 P16
13	T/C RAIL SECTION	Ｔ ／ Ｃ レール	P17
14	HOPPER DRIVE SECTION	ホッパー駆動部	P18
15	CONTACT SECTION	Ｉ Ｕ 接点部	P19
16	TONER PIPE SECTION	トナーパイプ部	P20
17	ERASER SECTION	イレーサ部	P21
18	DEVELOPMENT DRIVE SECTION	現像駆動部	P22
19	TRANSFER BELT SECTION	転写ベルトユニット	P23
20	PAPER TRANSPORT SECTION	搬送部	P24
21	RIGHT DOOR SECTION	右扉	P25
22	TRANSPORT DRIVE SECTION	搬送駆動部	P26
23	WASTE TONER TRANSPORT SECTION	廃トナー搬送部	P27
24	WASTE TONER BOX SECTION	廃棄トナーボトル	P28
25	FUSING SECTION	定着部	P29
26	FUSING DRIVE SECTION	定着駆動部	P30

No.	DESCRIPTION	名称	PAGE No.
27	PAPER EXIT SECTION	排紙部	P31
28	PAPER EXIT DRIVE SECTION	排紙駆動部	P32
29	REAR DUCT SECTION	背面排気部	P33
30	POWER UNIT	電源ユニット	P34
31	ELECTRICAL COMPONENTS	電装部	P35
32	MPT CASSETTE TRAY SECTION	ＭＰＴトレイ	P36
33	MPT CASSETTE PAPER TAKE-UP SECTION	ＭＰＴ給紙部	P37
34	2ND CASSETTE PAPER TAKE-UP SECTION	ユニバーサルカセット給紙部	P38 P39 P40
35	2ND CASSETTE FRAME	ユニバーサルカセットフレーム部	P41
36	2ND CASSETTE DRIVE SECTION	ユニバーサルカセット駆動部	P42
37	2ND CASSETTE	ユニバーサルカセット	P43 P44
38	DUPLEX UNIT	自動両面ユニット	P45 P46 P47
39	OPTION EQUIPMENT KIT	オプション搭載キット	P48
40	WIRING	束線	P49 P50 P51
41	WIRING ACCESSORIES AND JIGS	配線部品・治具	P52
42	ACCESSORY PARTS	同梱部品	P53

INDEX

Parts No.	Page No.
0866 7801 01	35-42
0866 7801 01	35-42
0992 3014 01	44-18
0996 3055 01	9-16
0996 3055 01	41-15
1038 4006 01	52-19
1053 3103 01	1-5
1065 3086 01	38-21
1065 5872 02	52-8
1067 2501 01	16-9
1067 2501 01	38-18
1075 2565 01	14-11
1134 3042 02	12-7
1136 1019 03	1-14
1139 1612 01	5-18
1154 4670 01	9-1
1156 7501 01	53-5
1164 2080 01	11-26
1164 3003 01	37-17
1164 3004 03	37-21
1164 3005 02	37-22
1164 3009 01	37-24
1164 3020 03	11-15
1164 3022 02	11-18
1164 3027 01	11-9
1164 3045 01	36-33
1164 3053 12	11-3
1164 3054 01	11-23
1164 3061 01	36-13
1164 3062 01	36-14
1164 3066 01	37-5
1164 3527 02	24-35
1200 1442 04	35-24
1200 1646 03	32-15
1200 3120 02	30-16
1274 2611 01	14-3
1274 3603 01	44-26
4002 1422 02	5-12
4002 1423 01	5-10
4002 1456 01	5-4

Parts No.	Page No.
4002 1458 01	4-30
4002 1480 01	5-16
4002 1481 01	5-15
4002 2581 01	41-1
4002 2581 01	42-16
4002 3108 01	44-22
4002 3110 01	42-24
4002 3131 01	42-25
4002 7306 01	44-3
4004 2148 01	33-10
4004 2203 01	35-18
4004 2545 01	26-24
4004 2545 01	27-7
4004 3001 02	37-6
4004 3004 01	37-14
4004 3005 01	37-8
4004 3006 03	37-15
4004 3008 01	36-17
4004 3011 01	11-20
4004 3012 01	11-21
4004 3024 01	36-12
4004 3029 01	11-4
4004 3031 01	36-25
4004 3032 01	36-31
4004 3033 01	36-15
4004 3038 01	36-16
4004 3040 02	36-11
4004 3042 01	36-35
4004 3051 02	36-27
4004 3052 01	11-17
4004 3061 01	11-11
4004 3062 06	11-8
4004 3063 01	11-6
4004 3503 02	24-18
4004 3504 02	24-19
4004 5339 01	14-17
4004 5607 02	27-6
4004 5612 01	27-10
4004 7324 01	36-3
4005 0203 01	5-21

Parts No.	Page No.
4005 1320 01	4-24
4005 1464 01	5-2
4011 3011 01	36-9
4011 3012 01	42-14
4011 3020 01	37-4
4011 3020 01	44-25
4011 3021 01	44-24
4021 3036 01	36-34
4025 1018 01	1-17
4025 2175 01	7-20
4025 2283 01	35-2
4025 2285 02	3-18
4025 2294 01	35-23
4025 2295 01	35-25
4025 3572 01	24-17
4025 5984 01	32-3
4025 6805 01	34-22
4030 0151 01	39-10
4030 2080 01	41-24
4030 3002 02	38-12
4030 3003 01	38-16
4030 3005 01	38-11
4030 3008 01	38-17
4030 3010 02	38-5
4030 3011 02	38-22
4030 3012 01	38-23
4030 3013 01	39-13
4030 3016 12	38-4
4030 3017 03	39-14
4030 3020 02	38-19
4030 3025 02	39-6
4030 3030 01	38-20
4030 3034 01	38-10
4030 3036 01	38-14
4030 3037 01	39-5
4030 3039 01	39-16
4030 3046 03	42-11
4030 3047 02	42-23
4030 3048 02	42-8
4030 3049 01	42-9

Parts No.	Page No.
4030 3077 01	39-9
4030 3078 01	39-11
4030 3079 01	39-12
4030 3081 01	42-5
4030 3083 01	42-7
4030 3091 01	42-22
4030 3095 01	38-13
4030 3105 01	39-1
4030 3116 01	40-8
4030 3122 01	40-4
4030 3123 01	40-2
4030 3124 03	39-2
4030 3125 01	39-4
4030 3129 03	39-3
4030 3201 06	44-17
4030 3203 01	43-7
4030 3205 01	44-27
4030 3206 01	44-28
4030 3207 01	44-23
4030 3208 02	42-10
4030 3211 02	44-16
4030 3212 01	44-1
4030 3214 02	44-5
4030 3215 01	44-6
4030 3216 01	44-20
4030 3217 01	44-8
4030 3218 01	44-21
4030 3221 01	43-12
4030 3222 03	43-11
4030 3223 02	43-10
4030 3224 02	42-4
4030 3224 02	43-13
4030 3226 01	43-8
4030 3227 01	44-10
4030 3228 12	44-9
4030 3229 02	43-1
4030 3403 01	13-10
4030 3412 01	12-37
4030 3414 01	12-4
4030 3415 02	12-6

Parts No.	Page No.
4030 3446 01	12-5
4030 3460 02	12-36
4030 3475 01	13-19
4030 7301 02	36-22
4030 7301 02	43-4
4030 7500 01	1-12
4034 0151 01	13-23
4034 0151 01	37-10
4034 3012 01	37-7
4036 1011 01	1-21
4036 1366 01	7-2
4036 1374 02	7-10
4036 1381 03	2-4
4036 1408 01	53-9
4036 1410 01	3-7
4036 1425 01	5-14
4036 1509 01	8-3
4036 1582 01	7-1
4036 1611 01	3-22
4036 1631 01	4-14
4036 1632 02	4-7
4036 1633 01	7-13
4036 1720 01	4-16
4036 2549 01	32-6
4036 3008 01	36-8
4036 3014 01	37-20
4036 3018 01	37-19
4036 3019 01	36-36
4036 3021 02	36-19
4036 3022 01	36-5
4036 3025 01	36-23
4036 3025 01	43-5
4036 3028 01	36-2
4036 3030 01	37-2
4036 3031 01	37-3
4036 3040 01	37-18
4036 3086 01	36-1
4036 3672 01	32-12
4036 3808 03	41-10
4036 3809 01	41-25

Parts No.	Page No.
4036 3810 03	41-5
4036 3811 01	41-26
4036 3814 01	41-16
4036 3823 01	40-6
4036 3828 02	41-19
4036 3831 01	40-21
4036 3838 01	39-8
4036 3843 02	41-14
4036 3846 02	39-7
4036 3849 01	41-6
4036 4909 01	1-2
4036 6860 01	4-19
4036 6862 01	2-17
4036 6870 01	35-21
4036 7313 01	36-28
4036 7314 01	36-4
4036 7342 01	3-8
4036 7343 01	3-8
4036 7343 01	53-11
4036 7343 01	53-11
4037 0103 01	11-25
4037 0104 01	11-16
4037 0104 01	42-13
4037 0775 01	34-24
4037 0902 01	38-2
4037 0903 01	4-11
4037 0904 01	11-19
4037 0906 01	12-3
4037 0906 01	24-28
4037 0906 01	30-29
4037 0906 01	38-8
4037 0906 01	42-6
4037 1006 01	1-26
4037 1535 01	8-5
4037 1535 01	8-5
4037 1536 02	8-6
4037 1536 02	8-6
4037 2219 02	35-8
4037 2220 02	35-6
4037 2239 02	34-25

Parts No.	Page No.
4037 2240 01	35-39
4037 2242 01	35-41
4037 2244 01	35-33
4037 2247 01	35-4
4037 3204 01	44-15
4037 3210 01	36-10
4037 3226 01	36-37
4037 3227 01	36-30
4037 6076 01	35-26
4037 6086 01	35-44
4037 6086 01	35-44
4037 6727 01	8-7
4037 6727 01	8-7
4037 6776 01	35-3
4037 6777 01	35-7
4037 6778 02	35-5
4037 6812 01	35-16
4037 6819 01	7-11
4037 6854 01	7-18
4037 6899 01	12-34
4037 7001 00	8-14
4037 7001 00	13-14
4037 7403 01	1-25
4037 7403 01	1-25
4037 7406 01	1-24
4037 7407 01	1-25
4038 0105 03	15-1
4038 0115 01	4-28
4038 0123 03	35-31
4038 0124 02	48-2
4038 0180 01	8-4
4038 0203 02	27-21
4038 0210 01	25-14
4038 0211 04	16-14
4038 0252 03	12-38
4038 1008 03	1-4
4038 1010 01	1-15
4038 1014 01	10-8
4038 1018 02	33-8
4038 1020 03	1-1

Parts No.	Page No.
4038 1021 05	1-29
4038 1022 06	1-9
4038 1024 04	1-20
4038 1027 04	1-23
4038 1035 01	1-22
4038 1039 02	1-3
4038 1041 02	3-2
4038 1041 02	53-2
4038 1046 01	1-10
4038 1048 01	1-31
4038 1050 01	34-16
4038 1051 01	1-7
4038 1102 02	10-9
4038 1105 01	10-12
4038 1271 00	17-13
4038 1272 00	27-4
4038 1380 01	2-11
4038 1383 01	2-13
4038 1384 01	2-19
4038 1385 01	2-3
4038 1386 01	2-2
4038 1387 01	2-15
4038 1388 01	2-16
4038 1390 01	2-12
4038 1393 03	3-3
4038 1398 01	2-8
4038 1402 01	8-9
4038 1403 02	8-13
4038 1405 05	3-17
4038 1406 02	2-7
4038 1421 02	5-13
4038 1454 01	5-1
4038 1457 01	4-27
4038 1500 01	8-8
4038 1501 02	8-1
4038 1502 03	35-9
4038 1503 04	8-15
4038 1504 02	8-11
4038 1508 02	8-12
4038 1510 01	7-14

Parts No.	Page No.
4038 1510 01	35-27
4038 1512 01	4-6
4038 1513 01	4-5
4038 1906 04	16-2
4038 2008 02	11-13
4038 2013 04	28-3
4038 2014 08	21-10
4038 2015 02	21-19
4038 2016 02	15-3
4038 2017 01	15-4
4038 2018 03	15-5
4038 2020 02	17-4
4038 2021 03	17-3
4038 2022 02	17-12
4038 2023 18	23-1
4038 2024 02	23-19
4038 2026 01	23-23
4038 2027 01	23-21
4038 2028 01	23-22
4038 2029 01	23-2
4038 2033 01	33-3
4038 2036 01	9-9
4038 2036 01	35-13
4038 2038 02	17-2
4038 2040 01	21-9
4038 2042 01	16-19
4038 2043 03	16-20
4038 2044 02	16-5
4038 2045 01	23-9
4038 2046 01	23-3
4038 2047 02	23-6
4038 2048 01	23-5
4038 2051 01	15-12
4038 2052 02	20-9
4038 2053 02	20-10
4038 2055 02	33-5
4038 2056 02	20-8
4038 2060 02	15-10
4038 2061 01	15-7
4038 2062 01	27-27

Parts No.	Page No.
4038 2065 17	9-5
4038 2066 12	9-7
4038 2067 01	15-11
4038 2069 01	21-7
4038 2071 02	34-7
4038 2072 04	21-8
4038 2073 01	9-10
4038 2073 01	35-15
4038 2074 05	35-12
4038 2075 02	35-14
4038 2076 01	27-2
4038 2077 13	23-11
4038 2078 13	23-14
4038 2080 01	23-8
4038 2081 02	20-11
4038 2083 01	1-19
4038 2084 03	1-18
4038 2089 01	27-22
4038 2094 01	15-2
4038 2097 02	9-17
4038 2099 01	11-2
4038 2101 01	20-6
4038 2102 01	17-14
4038 2103 04	20-3
4038 2104 02	20-4
4038 2105 03	20-2
4038 2106 01	20-12
4038 2107 03	17-15
4038 2108 01	17-10
4038 2109 01	17-9
4038 2110 03	17-17
4038 2111 02	27-12
4038 2112 04	27-13
4038 2113 02	27-25
4038 2114 01	27-16
4038 2115 02	27-11
4038 2116 04	27-26
4038 2117 02	27-14
4038 2118 01	27-1
4038 2119 01	27-5

Parts No.	Page No.
4038 2120 02	27-19
4038 2130 01	27-24
4038 2131 07	27-15
4038 2140 01	27-23
4038 2142 01	27-18
4038 2143 01	27-17
4038 2150 01	17-11
4038 2151 02	20-5
4038 2151 02	23-17
4038 2152 13	23-12
4038 2153 13	23-13
4038 2162 02	11-12
4038 2173 02	17-5
4038 2174 03	17-5
4038 2175 02	17-5
4038 2175 02	17-5
4038 2178 01	34-5
4038 2179 01	16-18
4038 2180 01	16-17
4038 2181 01	21-6
4038 2182 01	21-3
4038 2183 01	21-1
4038 2184 01	16-16
4038 2187 04	16-4
4038 2188 02	16-15
4038 2189 01	16-3
4038 2190 03	16-12
4038 2191 02	16-11
4038 2192 02	16-13
4038 2193 03	16-8
4038 2194 01	16-6
4038 2196 01	16-10
4038 2198 02	21-18
4038 2199 02	21-2
4038 2205 02	23-15
4038 2206 02	19-6
4038 2207 01	23-16
4038 2217 01	23-18
4038 2222 01	19-9
4038 2225 02	19-12

Parts No.	Page No.
4038 2232 01	19-13
4038 2233 02	19-3
4038 2237 01	33-7
4038 2241 02	33-6
4038 2249 02	15-9
4038 2253 01	26-27
4038 2255 01	19-8
4038 2265 04	10-3
4038 2266 01	10-2
4038 2274 01	19-7
4038 2275 01	19-1
4038 2276 01	19-11
4038 2277 01	19-10
4038 2281 03	10-14
4038 2282 03	10-6
4038 2283 02	10-16
4038 2287 01	10-1
4038 2302 01	35-32
4038 2307 02	34-8
4038 2308 02	34-11
4038 2309 01	34-13
4038 2310 01	48-1
4038 2311 01	48-4
4038 2312 01	35-22
4038 2313 01	19-5
4038 2314 03	34-19
4038 2401 08	34-3
4038 2402 05	34-17
4038 2405 01	35-10
4038 2406 02	34-27
4038 2408 01	11-14
4038 2411 02	33-4
4038 2412 02	33-11
4038 2508 01	26-22
4038 2513 01	26-1
4038 2514 01	26-17
4038 2515 01	26-16
4038 2517 01	26-21
4038 2519 01	26-12
4038 2520 01	26-2

Parts No.	Page No.
4038 2523 01	26-19
4038 2524 01	26-5
4038 2526 01	26-10
4038 2529 01	26-3
4038 2531 01	26-6
4038 2532 01	26-7
4038 2535 01	26-13
4038 2536 01	26-26
4038 2539 01	26-25
4038 2549 01	26-18
4038 2551 01	26-9
4038 2578 01	26-23
4038 2579 01	27-8
4038 2580 01	30-19
4038 2586 01	27-9
4038 2591 01	30-35
4038 2592 01	30-33
4038 2593 02	30-36
4038 2597 01	26-28
4038 2598 01	26-14
4038 2599 01	26-4
4038 2699 01	26-15
4038 3020 03	36-24
4038 3054 01	11-22
4038 3063 01	37-1
4038 3071 02	36-20
4038 3204 04	13-13
4038 3205 01	13-1
4038 3207 03	13-2
4038 3212 04	12-20
4038 3216 03	13-5
4038 3217 01	13-4
4038 3218 01	13-7
4038 3220 01	13-6
4038 3221 03	12-29
4038 3222 03	12-30
4038 3228 03	13-8
4038 3231 02	13-28
4038 3232 01	14-10
4038 3233 02	12-14

Parts No.	Page No.
4038 3234 01	12-15
4038 3236 01	14-7
4038 3237 01	14-18
4038 3240 01	14-2
4038 3244 02	14-14
4038 3246 01	14-4
4038 3247 01	14-5
4038 3252 01	12-23
4038 3253 01	12-24
4038 3255 01	12-32
4038 3260 01	14-1
4038 3261 02	13-17
4038 3262 03	13-18
4038 3263 01	13-9
4038 3265 01	13-21
4038 3266 01	13-16
4038 3267 01	13-24
4038 3268 02	13-12
4038 3269 02	13-25
4038 3270 01	13-20
4038 3272 01	12-35
4038 3286 01	12-28
4038 3502 02	24-9
4038 3511 02	25-15
4038 3512 01	25-12
4038 3515 02	25-21
4038 3516 01	25-8
4038 3517 02	22-1
4038 3520 01	25-2
4038 3521 01	25-20
4038 3523 01	25-16
4038 3525 01	24-16
4038 3526 04	24-13
4038 3527 03	24-42
4038 3529 02	24-3
4038 3530 01	24-15
4038 3531 02	24-26
4038 3532 01	24-2
4038 3534 01	25-13
4038 3535 02	24-14

Parts No.	Page No.
4038 3536 01	24-10
4038 3537 01	24-7
4038 3538 01	24-8
4038 3539 01	24-6
4038 3540 03	24-12
4038 3541 01	11-1
4038 3542 02	25-3
4038 3551 01	25-7
4038 3552 01	25-11
4038 3553 01	25-4
4038 3556 01	24-39
4038 3558 02	24-41
4038 3559 01	24-40
4038 3561 03	24-32
4038 3562 01	24-33
4038 3567 01	24-22
4038 3571 02	25-10
4038 3592 01	24-24
4038 3593 01	24-21
4038 3594 01	23-7
4038 3595 01	9-3
4038 3597 01	24-20
4038 3735 01	29-5
4038 4611 01	25-5
4038 4620 01	25-9
4038 5651 00	13-26
4038 5653 00	13-11
4038 5654 00	37-11
4038 5655 00	37-13
4038 5852 02	31-10
4038 5860 01	32-9
4038 5862 01	32-22
4038 5863 01	32-24
4038 5864 01	32-23
4038 5871 02	32-30
4038 5872 02	32-29
4038 5876 01	47-5
4038 5877 02	32-21
4038 5881 05	31-1
4038 5883 03	31-5

Parts No.	Page No.
4038 5886 03	31-4
4038 5887 01	32-1
4038 5893 01	32-16
4038 5893 01	46-12
4038 5896 02	31-6
4038 5897 01	32-14
4038 5898 01	32-17
4038 5901 01	32-11
4038 5915 01	32-2
4038 6051 04	2-6
4038 6052 04	2-6
4038 6052 04	2-6
4038 6053 04	2-6
4038 6058 04	2-6
4038 6059 04	2-6
4038 6251 00	40-19
4038 6803 03	49-1
4038 6811 02	10-21
4038 6815 02	10-23
4038 6816 01	10-13
4038 6817 03	34-26
4038 6829 01	11-5
4038 6830 02	24-29
4038 6835 01	23-26
4038 6836 01	23-20
4038 6840 02	17-21
4038 6844 01	53-12
4038 6847 01	34-4
4038 6848 01	34-1
4038 6863 01	4-23
4038 6864 01	7-9
4038 7301 03	1-30
4038 7302 02	25-18
4038 7303 01	24-1
4038 7304 01	31-2
4038 7308 02	10-11
4038 7309 01	10-10
4038 7309 01	21-11
4038 7311 02	28-2
4038 7312 01	36-21

Parts No.	Page No.
4038 7313 01	53-7
4038 7313 01	53-7
4038 7314 01	53-7
4038 7315 02	1-16
4038 7316 01	17-6
4038 7321 01	43-3
4038 7337 01	36-18
4038 7341 01	1-25
4038 7351 01	12-1
4038 7351 01	12-1
4038 7352 01	12-1
4038 R705 00	15-14
4038 R706 00	17-8
4038 R707 00	19-16
4038 R708 00	19-15
4038 R709 00	20-1
4038 R710 00	20-7
4038 R712 00	36-32
4038 R717 00	52-21
4038 R745 00	27-3
4039 2208 01	17-16
4039 2209 01	9-18
4039 2210 01	9-2
4039 5602 00	37-23
4039 5604 00	36-29
4040 7304 01	43-6
4040 M100 00	35-34
4065 611	28-5
4066 0101 02	46-21
4066 0208 03	46-27
4066 0209 02	47-8
4066 3701 06	45-13
4066 3702 04	45-6
4066 3703 02	45-3
4066 3704 03	45-17
4066 3705 01	45-2
4066 3706 01	46-1
4066 3707 01	46-3
4066 3709 01	46-8
4066 3710 01	45-1

Parts No.	Page No.
4066 3711 03	45-9
4066 3713 02	46-14
4066 3714 01	46-6
4066 3715 01	46-28
4066 3716 04	47-3
4066 3718 01	46-5
4066 3720 01	46-29
4066 3722 01	47-4
4066 3723 01	47-7
4066 3726 02	45-10
4066 3729 01	45-15
4066 3730 01	46-15
4066 3731 01	46-10
4066 3731 01	47-13
4066 3732 02	46-13
4066 3736 01	45-12
4066 3738 01	45-7
4066 3739 01	45-20
4066 3741 01	45-8
4066 3743 01	46-16
4066 3745 01	47-15
4066 3746 01	47-6
4066 3747 01	46-11
4066 3747 01	47-14
4066 3751 01	46-30
4066 3752 01	46-4
4066 3754 01	45-16
4066 3761 01	46-20
4066 3762 01	46-23
4066 3763 01	46-18
4066 3764 02	47-10
4066 3765 02	47-9
4066 3770 03	47-16
4066 3777 01	45-18
4066 3778 01	45-19
4066 6801 01	46-22
4066 6802 01	47-12
4066 7301 02	45-4
4067 0101 03	42-21
4067 0201 02	41-8

Parts No.	Page No.
4067 0202 03	41-2
4067 0203 02	42-2
4067 0204 03	38-26
4067 3802 01	41-11
4067 3803 02	41-3
4067 3805 02	41-23
4067 3807 03	41-22
4067 3815 02	42-15
4067 3816 02	38-7
4067 3818 02	41-4
4067 3820 01	42-19
4067 3821 01	41-9
4067 3822 03	40-1
4067 3825 01	40-20
4067 3832 01	40-18
4067 3833 01	40-5
4067 3834 01	40-9
4067 3851 01	53-8
4067 3852 01	43-2
4067 3855 02	41-30
4067 3856 02	41-28
4067 3857 02	41-29
4067 3871 01	41-27
4067 5614 00	39-15
4067 6801 04	42-17
4067 6802 01	42-20
4067 6803 02	42-26
4067 6804 01	38-25
4067 6805 01	42-18
4106 2063 01	10-25
4106 2063 01	16-7
4109 5530 01	34-2
4128 2215 01	9-6
4128 3522 01	24-30
4128 3823 01	44-14
4131 0326 01	10-22
4131 3001 01	14-8
4131 3003 01	38-6
4131 3532 02	14-6
4131 3532 02	40-11

Parts No.	Page No.
4134 3106 01	36-7
4136 6751 01	10-15
4142 3217 01	14-9
4154 3804 01	9-8
4154 3804 01	10-5
4154 3804 01	15-6
4154 3804 01	19-4
4154 3804 01	23-10
4154 3804 01	28-4
4154 3804 01	30-11
4154 3804 01	34-6
4163 5293 01	23-4
4163 5293 01	25-6
4163 5293 01	31-7
4163 5293 01	32-32
4163 5293 01	35-35
4163 5293 01	36-26
4163 5293 01	40-7
4330 3720 01	46-9
4330 3738 02	46-26
4330 3746 03	47-11
4330 3753 02	46-25
4330 3761 04	46-24
4330 3762 01	46-19
4348 2037 02	41-12
4348 2038 02	41-13
4348 2040 01	41-31
4348 2041 02	41-21
4348 2044 01	41-20
4348 3011 04	40-12
4348 3028 01	40-17
4348 3029 01	38-27
4348 3030 01	42-3
4348 3031 01	40-14
4348 3032 01	40-15
4348 3042 01	40-10
4348 3042 01	41-7
4348 3046 01	38-1
4348 3047 01	38-24
4348 3048 01	40-13

Parts No.	Page No.
4348 3049 01	38-3
4348 3069 03	40-16
4348 3070 02	38-28
4348 3071 01	40-3
4425 3013 01	38-9
4425 3016 01	38-15
4475 2603 01	1-8
4497 3116 01	46-2
4498 3469 01	43-9
4498 3825 01	44-13
4498 3826 01	44-12
4498 3834 01	44-19
4575 3707 01	45-11
4581 1316 01	2-18
4581 1316 01	7-8
4581 1318 01	3-11
4581 1379 01	2-10
4581 1382 01	2-1
4581 1389 01	2-14
4581 1427 01	5-11
4581 1428 01	5-22
4581 1429 01	5-20
4581 1452 01	5-6
4581 1453 01	5-3
4581 1455 01	5-7
4581 1579 01	7-3
4581 1605 03	3-6
4581 1610 01	3-20
4581 1625 01	4-2
4581 1627 01	4-12
4581 1640 02	5-19
4581 2269 04	7-12
4581 2269 04	35-40
4581 3806 01	5-9
4581 7901 02	52-22
4643 1020 03	1-6
4657 3714 01	46-7
4657 3725 01	45-14
4657 3736 01	45-5
4658 3012 01	44-7

Parts No.	Page No.
4658 3040 01	37-12
4658 3042 02	41-18
4658 3046 01	37-9
4658 3048 01	44-2
4658 3049 01	44-4
4658 3140 02	41-17
4658 3516 01	26-11
4658 3516 01	30-10
4687 3281 01	12-39
4687 3281 01	36-6
9312 1200 31	42-12
9313 1000 72	9-13
9313 1000 72	33-1
9313 1000 72	33-9
9313 1000 72	34-14
9313 1300 41	4-22
9313 1300 41	31-8
9313 1400 31	35-37
9313 1500 12	34-12
9313 1500 21	4-8
9314 1001 04	46-17
9314 1001 04	47-2
9314 1300 61	42-1
9314 1910 83	4-25
9314 2300 12	22-4
9314 2400 41	30-40
9314 2500 11	22-3
9321 2400 61	14-13
9322 1200 32	14-12
9322 1300 21	24-37
9322 1300 21	30-31
9322 1300 31	26-20
9322 1400 21	26-8
9325 4400 21	5-24
9326 1001 11	2-9
9326 1001 11	2-9
9326 1001 11	5-25
9326 1001 11	5-25
9326 1001 11	7-7
9326 1200 61	7-5

Parts No.	Page No.
9326 1200 61	7-5
9326 1410 31	34-29
9326 1810 21	4-20
9326 1810 21	4-20
9331 2200 21	10-4
9332 1710 41	9-4
9332 5400 11	10-17
9334 2610 12	3-4
9335 1300 61	14-16
9335 1300 61	27-20
9335 1300 61	47-1
9335 1400 11	24-34
9335 1400 21	24-4
9335 1400 61	11-10
9335 1400 81	7-16
9335 1400 81	7-17
9335 1400 81	7-17
9335 1400 81	7-17
9351 3300 11	5-23
9353 2400 11	21-5
9372 1300 12	24-25
9372 5400 31	24-31
9381 4101 31	53-6
9381 4300 31	53-6
9381 4300 41	53-6
9381 4300 91	53-6
9383 2210 11	30-37
9383 5000 11	34-23
9384 1000 51	52-1
9384 1100 21	52-9
9384 1100 31	52-10
9384 1100 91	52-2
9384 1300 51	52-11
9384 1310 11	52-3
9384 1310 81	52-4
9384 1311 11	52-17
9384 1410 51	52-18
9384 1521 51	52-20
9384 1621 21	48-3
9384 1700 24	52-12

Parts No.	Page No.
9384 1700 24	52-12
9384 1700 24	53-4
9384 1700 24	53-4
9384 1900 55	4-32
9384 1900 57	4-29
9384 1921 01	52-5
9384 1921 11	52-6
9384 1921 21	52-7
9384 2010 21	52-13
9384 2200 31	53-3
9384 2710 42	52-14
9384 2910 21	52-15
9384 2910 31	52-16
9455 8076 01	13-15
9455 8076 01	24-23
9646 0308 14	53-1
9646 0308 14	53-1
9J06 0101 02	34-28
9J06 0113 03	7-6
9J06 0121 06	35-30
9J06 0202 03	13-27
9J06 0207 01	30-24
9J06 0212 01	32-25
9J06 0213 02	32-26
9J06 0214 03	32-13
9J06 1010 00	21-20
9J06 1011 00	17-19
9J06 1012 00	17-20
9J06 1013 00	17-18
9J06 1014 00	10-26
9J06 1015 01	21-21
9J06 1016 00	21-23
9J06 1017 00	21-22
9J06 1023 01	1-27
9J06 1029 01	1-28
9J06 1030 00	29-4
9J06 1101 05	10-7
9J06 1328 01	4-10
9J06 1332 01	4-15
9J06 1369 01	4-1

Parts No.	Page No.
9J06 1370 02	4-18
9J06 1371 01	4-21
9J06 1372 01	3-12
9J06 1373 01	5-17
9J06 1391 02	3-5
9J06 1392 02	3-9
9J06 1394 01	3-15
9J06 1395 01	3-1
9J06 1396 01	3-14
9J06 1399 01	2-5
9J06 1412 01	3-19
9J06 1413 02	3-16
9J06 1414 05	3-13
9J06 1415 02	53-13
9J06 1416 01	53-10
9J06 1451 01	5-5
9J06 1471 01	4-26
9J06 1515 01	8-2
9J06 1553 03	6-1
9J06 1559 01	6-2
9J06 1568 01	6-3
9J06 1569 02	6-7
9J06 1589 00	6-6
9J06 1590 01	7-15
9J06 1591 01	4-9
9J06 1593 00	6-9
9J06 1594 00	6-8
9J06 1598 00	4-13
9J06 1599 00	8-10
9J06 1620 01	3-10
9J06 1635 00	4-3
9J06 1636 00	4-4
9J06 1721 01	4-17
9J06 1722 02	4-31
9J06 2019 02	17-1
9J06 2032 00	21-13
9J06 2079 01	29-3
9J06 2082 01	29-6
9J06 2086 01	15-13
9J06 2301 01	35-17

Parts No.	Page No.
9J06 2303 02	35-1
9J06 2304 01	34-15
9J06 2305 01	10-18
9J06 2317 01	35-19
9J06 2318 01	35-28
9J06 2320 01	35-38
9J06 2403 01	34-20
9J06 2410 02	35-36
9J06 2454 01	33-13
9J06 2455 01	9-12
9J06 2456 01	9-11
9J06 2457 01	9-14
9J06 2458 01	21-24
9J06 2459 03	21-14
9J06 2460 01	10-24
9J06 2461 01	21-12
9J06 2462 01	29-2
9J06 2463 01	29-7
9J06 2464 01	11-27
9J06 2465 01	33-2
9J06 2466 01	10-20
9J06 2467 01	10-19
9J06 2468 02	33-12
9J06 2469 01	33-14
9J06 2470 01	34-10
9J06 2472 00	21-15
9J06 2473 00	21-16
9J06 2541 01	30-13
9J06 2542 01	30-25
9J06 2543 01	30-27
9J06 2544 01	30-28
9J06 2545 01	30-38
9J06 2546 01	30-18
9J06 2547 01	30-34
9J06 2548 00	30-41
9J06 2556 01	30-1
9J06 2557 01	30-12
9J06 2559 01	30-15
9J06 2563 02	30-39
9J06 2564 01	30-26

Parts No.	Page No.
9J06 2566 01	30-3
9J06 2570 01	30-2
9J06 2571 01	30-8
9J06 2572 01	35-11
9J06 2573 01	30-9
9J06 2574 01	30-14
9J06 2575 01	30-21
9J06 2576 03	30-20
9J06 2581 01	30-7
9J06 2582 01	30-5
9J06 2583 02	25-17
9J06 2584 01	30-6
9J06 2585 01	30-4
9J06 2587 01	30-23
9J06 2594 01	30-22
9J06 2595 02	30-17
9J06 2596 01	30-32
9J06 3208 02	13-3
9J06 3213 01	12-26
9J06 3214 02	12-31
9J06 3215 02	12-22
9J06 3235 01	12-12
9J06 3249 01	14-15
9J06 3251 04	12-27
9J06 3256 01	12-25
9J06 3281 02	12-8
9J06 3282 01	12-2
9J06 3283 04	12-13
9J06 3284 03	12-11
9J06 3285 01	12-16
9J06 3286 02	12-21
9J06 3287 00	12-10
9J06 3501 01	24-5
9J06 3575 00	24-11
9J06 3576 00	24-36
9J06 5904 04	32-10
9J06 5911 02	32-27
9J06 5916 03	32-18
9J06 5925 02	32-28
9J06 5926 01	32-31

Parts No.	Page No.
9J06 5927 01	32-20
9J06 5928 01	32-19
9J06 5930 01	32-5
9J06 5944 01	31-3
9J06 5945 01	32-4
9J06 5946 02	32-7
9J06 5948 01	32-8
9J06 6201 01	34-9
9J06 6201 01	34-9
9J06 6202 01	34-9
9J06 6203 02	19-14
9J06 6211 00	12-18
9J06 6801 01	49-2
9J06 6802 01	49-2
9J06 6803 03	50-1
9J06 6805 04	51-1
9J06 6806 01	34-26
9J06 6806 01	34-26
9J06 6807 04	9-15
9J06 6808 02	34-31
9J06 6808 02	34-31
9J06 6810 01	12-33
9J06 6811 01	11-24
9J06 6812 02	31-9
9J06 6813 01	12-17
9J06 6814 01	34-21
9J06 6816 01	51-2
9J06 6817 01	7-4
9J06 6818 03	34-31
9J06 7000 00	24-27
9J06 7301 01	34-30
9J06 7302 01	34-18
9J06 7303 01	12-9
9J06 7323 01	1-11
9J06 7325 01	1-11
9J06 7354 01	12-19
9J06 H003 01	34-28
9J06 M700 00	35-20
9J06 M701 00	35-29
9J06 N100 00	17-7

Parts No.	Page No.
9J06 N101 00	35-43
9J06 PJG0 00	52-23
9J06 PJG1 00	52-24
9J06 R701 00	24-38
9J06 R702 00	6-5
9J06 R703 00	25-1
9J06 R704 00	23-24
9J06 R705 00	29-1
9J06 R706 00	29-1
9J06 R706 00	29-1
9J06 R707 00	29-1
9J06 R708 00	3-21
9J06 R709 00	18-1
9J06 R710 00	22-2
9J06 R711 00	16-21
9J06 R712 00	25-19
9J06 R713 00	28-1
9J06 R714 00	19-2
9J06 R715 00	23-25
9J06 R716 00	36-38
9J06 R717 00	12-40
9J06 R717 00	12-40
9J06 R718 00	13-22
9J06 R719 00	15-8
9J06 R720 00	5-8
9J06 R721 00	7-19
9J06 R723 00	37-16
9J06 R724 00	1-13
9J06 R726 00	30-30
9J06 R727 00	16-1
9J06 R728 00	6-4
9J06 R729 00	39-17
9J06 R730 00	15-15
9J06 R731 00	21-17
9J06 R732 00	21-4
9J06 R733 00	26-29
9J06 R734 00	29-1
9J06 R735 00	12-40
9J06 R738 00	44-11
9J06 R739 00	1-13

Parts No.	Page No.
9J06 R901 00	11-7

EXTERNAL PARTS

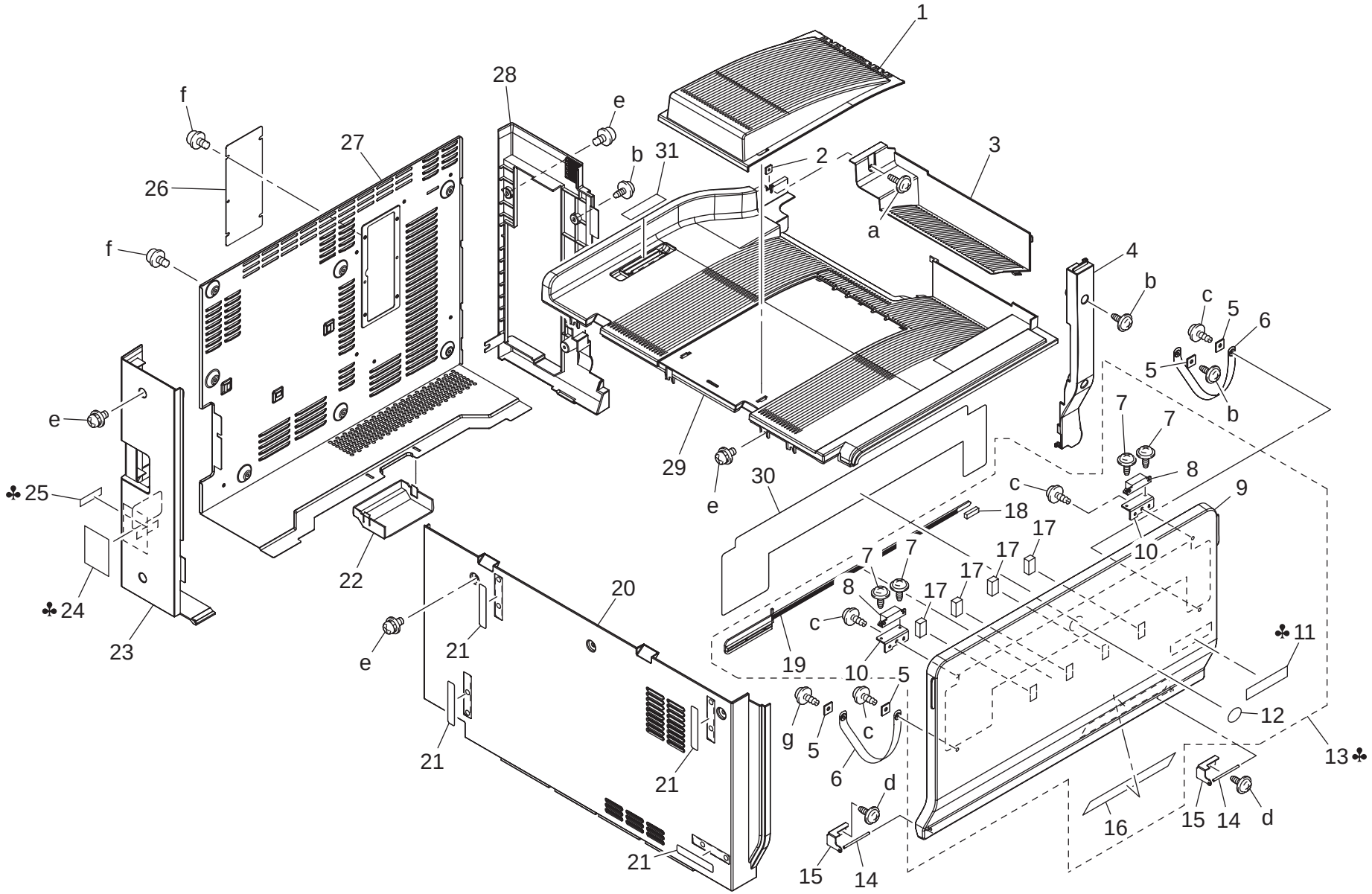

Key	Part No.	Description		Destinations	Class	QTY	Standard parts
1	4038 1020 03	TRAY TOP	上トレイ		C	1	a-9739 0408 14
2	4036 4909 01	PLATE NUT	板ナット		D	1	b-9735 0308 14
3	4038 1039 02	TOP COVER LIGHT	上カバー　右		C	1	c-9739 0308 14
4	4038 1008 03	RIGHT COVER	右カバー		C	1	d-9735 0306 14
5	1053 3103 01	SET PLATE	押え板		C	4	e-9646 0308 14
6	4643 1020 03	BAND	バンド		C	2	f-9646 0306 14
7	4038 1051 01	SCREW	ねじ		C	4	g-9739 0310 14
8	4475 2603 01	MAGNET CATCH	マグ゛ネットキャッチ		D	2	
9	4038 1022 06	FRONT DOOR	前扉		D	1	
10	4038 1046 01	BRACKET	取付板		D	2	
11	9J06 7323 01	LABEL bizhubC352	ラベル　ｂｉｚｈｕｂＣ３５２	{bizhub C352}	C	1	
11	9J06 7325 01	LABEL bizhubC300	ラベル　ｂｉｚｈｕｂＣ３００	{bizhub C300}	C	1	
12	4030 7500 01	LABEL LOGO MARK	ラベル ロゴマーク		C	1	
13	9J06 R724 00	FRONT COVER ASSY	前カバー ＡＳＳＹ	{bizhub C300}	C	1	
13	9J06 R739 00	FRONT COVER ASSY	前カバー ＡＳＳＹ	{bizhub C352}	C	1	
14	1136 1019 03	SHAFT	シャフト		D	2	
15	4038 1010 01	HINGE	ヒンジ		C	2	
16	4038 7315 02	LABEL CH CLEAN	ラベル　帯電清掃		C	1	
17	4025 1018 01	SEAL	シール		C	4	
18	4038 2084 03	CLEANING PAD	クリーニングパッド		C	1	
19	4038 2083 01	CLANING MATERIAL	清掃具		D	1	
20	4038 1024 04	LEFT COVER UPPER	左カバー　上		C	1	
21	4036 1011 01	LABEL HIDE	ラベル　目隠し		C	4	
22	4038 1035 01	REAR COVER	後カバー		C	1	
23	4038 1027 04	LEFT COVER	左カバー（後）		C	1	
24	4037 7406 01	LABEL EARTH CAUTION	ラベル アース注意	C,D1,D3,F2,G1,I,K	C	1	
25	4037 7403 01	LABEL OUTLET	ラベル　アウトレット	B,G2,H	C	1	
25	4037 7403 01	LABEL OUTLET	ラベル　アウトレット	F1{bizhub C352}	C	1	
25	4037 7407 01	LABEL OUTLET	ラベル	C,D1,D3,F2,G1,I,K,J	C	1	
25	4038 7341 01	LABEL OUTLET	ラベル　アウトレット	A1	C	1	
26	4037 1006 01	COVER	カバー		C	1	
27	9J06 1023 01	REAR COVER	後カバー		D	1	
28	9J06 1029 01	RIGHT COVER	右カバー		C	1	
29	4038 1021 05	TOP COVER	上カバー		C	1	
30	4038 7301 03	LABEL REMOVE	ラベル　交換		C	1	
31	4038 1048 01	SEAL	シール		C	1	

CONTROL PANEL

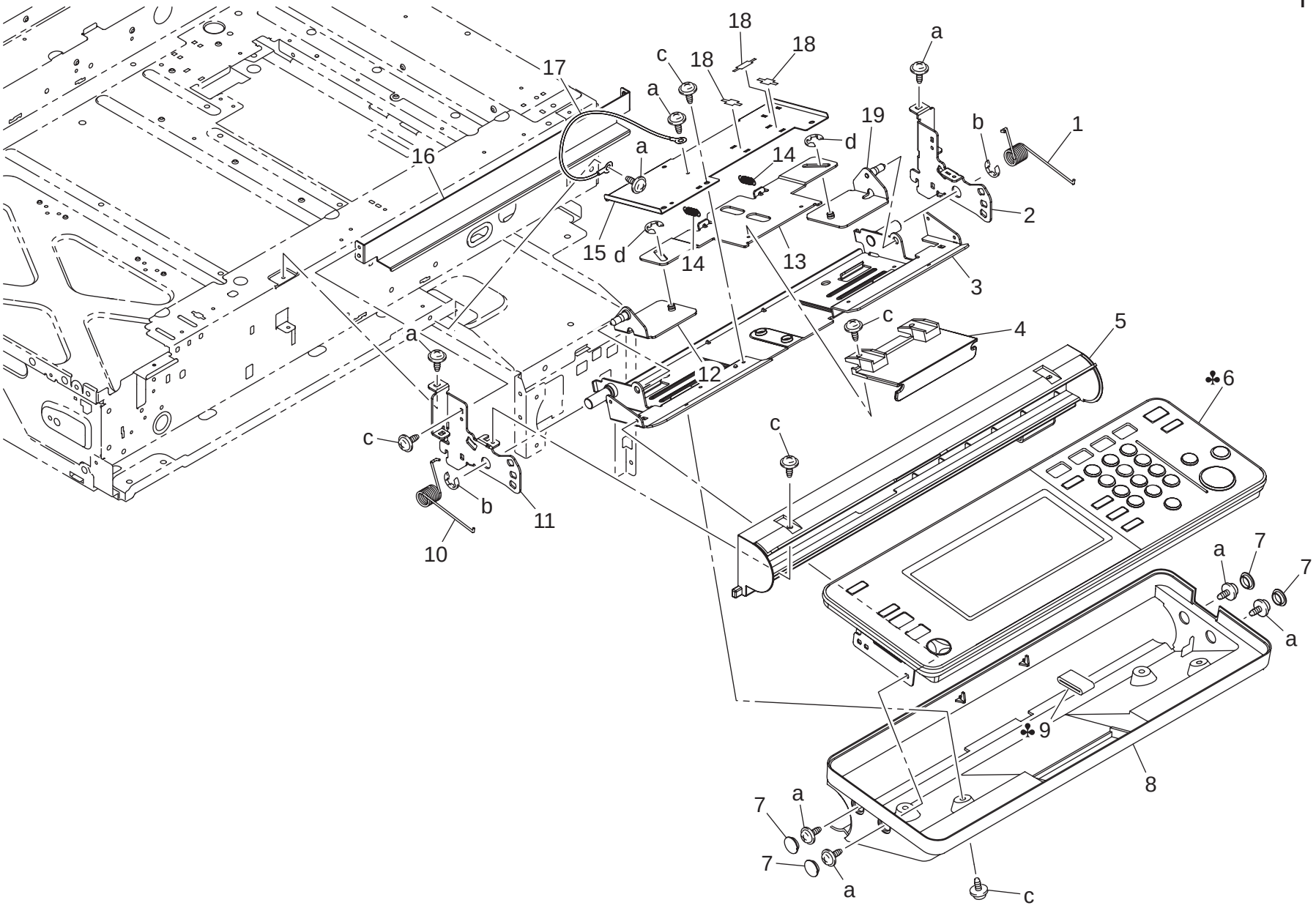

Key	Part No.	Description		Destinations	Class	QTY	Standard parts
1	4581 1382 01	TORSION SPRING	ねじりコイルばね		C	1	a-9735 0306 14 b-9721 0800 01 c-9735 0308 14 d-9721 0400 01
2	4038 1386 01	HOLD PLATE	保持板		D	1	
3	4038 1385 01	BRACKET	取付板		D	1	
4	4036 1381 03	LEVER	レバー		C	1	
5	9J06 1399 01	COVER	カバー		C	1	
6	4038 6051 04	CONTROL PANEL ASSY	操作パネル ＡＳＳＹ	A1	I	1	
6	4038 6052 04	CONTROL PANEL ASSY	操作パネル ＡＳＳＹ	B,D1,D3,F2,G1,G2,I,K	I	1	
6	4038 6052 04	CONTROL PANEL ASSY	操作パネル ＡＳＳＹ	F1{bizhub C352}	I	1	
6	4038 6053 04	CONTROL PANEL ASSY	操作パネル ＡＳＳＹ	C	I	1	
6	4038 6058 04	CONTROL PANEL ASSY	操作パネル ＡＳＳＹ	J	I	1	
6	4038 6059 04	CONTROL PANEL ASSY	操作パネル ＡＳＳＹ	H	I	1	
7	4038 1406 02	CAP	キャップ		C	4	
8	4038 1398 01	COVER	カバー		C	1	
9	9326 1001 11	FERRITE CORE	フェライトコア	C,D1,D3,F2,G1,H,I,J,K	D	1	
9	9326 1001 11	FERRITE CORE	フェライトコア	F1{bizhub C352}	D	1	
10	4581 1379 01	TORSION SPRING	ねじりコイルばね		C	1	
11	4038 1380 01	HOLD PLATE	保持板		D	1	
12	4038 1390 01	POSITIONING PLATE	位置決め板		D	1	
13	4038 1383 01	COUPLING	連結板		D	1	
14	4581 1389 01	TENSION SPRING	引張コイルばね		C	2	
15	4038 1387 01	BRACKET	取付板		D	1	
16	4038 1388 01	BRACKET	取付板		D	1	
17	4036 6862 01	WIRE HARNESS ASSY	ハーネス ＡＳＳＹ		D	1	
18	4581 1316 01	SEAL	シール		C	3	
19	4038 1384 01	POSITIONING PLATE	位置決め板		D	1	

IR COVER

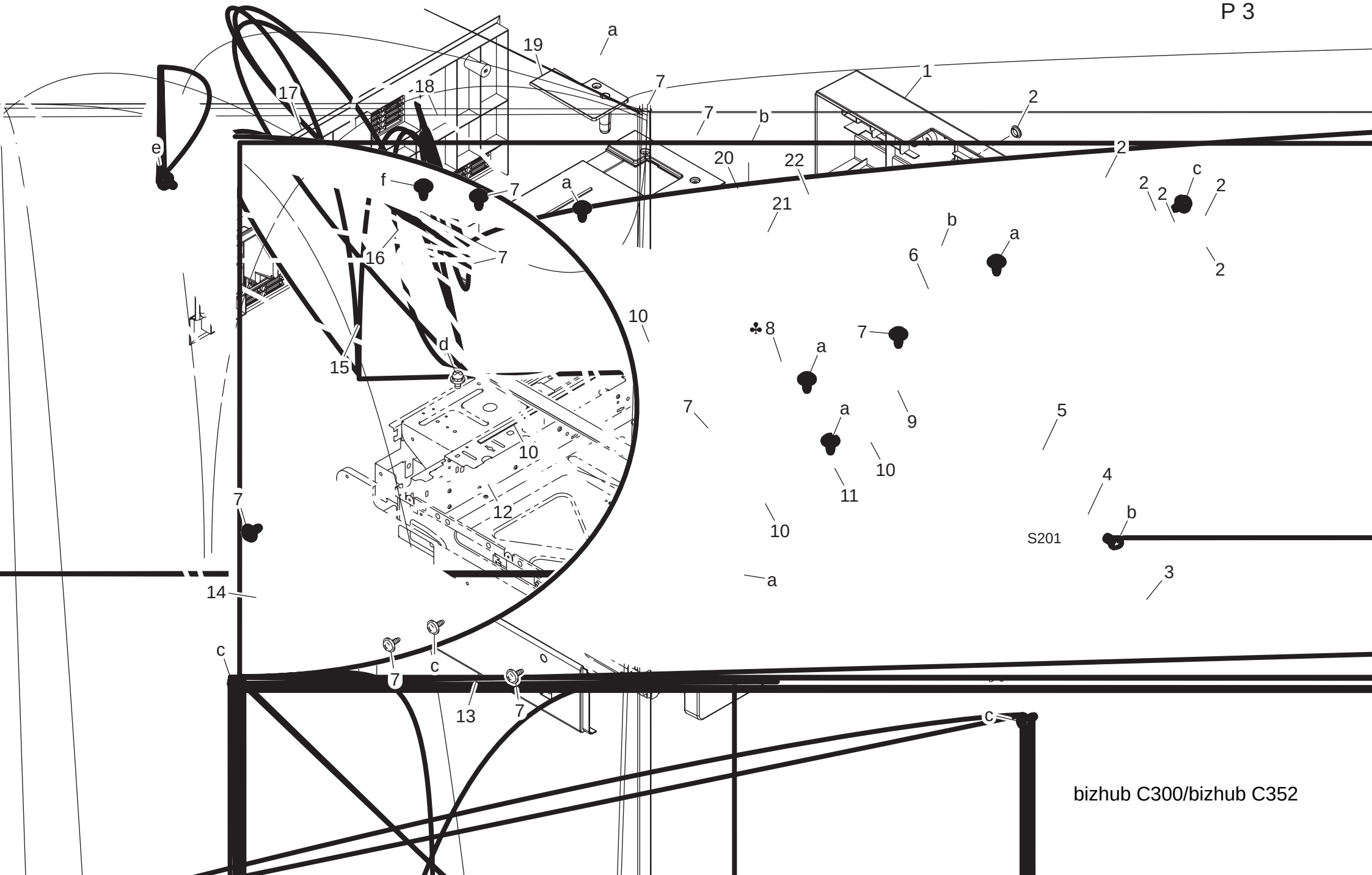

Key	Part No.	Description		Destinations	Class	QTY	Standard parts
1	9J06 1395 01	RIGHT COVER IR	右カバー　ＩＲ		C	1	a-9735 0306 14
2	4038 1041 02	CAP	キャップ		C	6	b-9644 0306 14
3	4038 1393 03	FRONT COVER	前カバー		C	1	c-9735 0308 14
4	9334 2610 12	REED SWITCH	リードスイッチ		C	1	d-9646 0306 14
5	9J06 1391 02	FRONT COVER IR	前カバー　ＩＲ		C	1	e-9646 0308 14
6	4581 1605 03	SET PLATE	押え板		C	1	f-9735 0408 14
7	4036 1410 01	SHOULDER SCREW	段ねじ		C	9	
8	4036 7342 01	LABEL REGAL RESTRICTION	ラベル　コピー禁止事項	A1	C	1	
8	4036 7343 01	LABEL REGAL RESTRICTION	ラベル　コピー禁止事項	B,G2	C	1	
9	9J06 1392 02	FRONT COVER IR	上カバー　ＩＲ		C	1	
10	9J06 1620 01	SEAL	シール		C	4	
11	4581 1318 01	REGULATING PLATE	規制板		D	1	
12	9J06 1372 01	REINFORCE PLATE	補強板		D	1	
13	9J06 1414 05	LEFT UPPER COVER IR	左上カバー　ＩＲ		C	1	
14	9J06 1396 01	LEFT LOWER COVER IR	左下カバー　ＩＲ		C	1	
15	9J06 1394 01	REAR UPPER COVER IR	後上カバー　ＩＲ		C	1	
16	9J06 1413 02	COVER	カバー（原稿カバー取付蓋・左）		C	1	
17	4038 1405 05	REAR COVER IR	後カバー　ＩＲ		C	1	
18	4025 2285 02	FILTER	フィルタ		C	1	
19	9J06 1412 01	COVER	カバー		C	1	
20	4581 1610 01	SET PLATE	押え板		C	1	
21	9J06 R708 00	ORIGINAL GLASS ASSY	原稿ガラス ＡＳＳＹ		C	1	
22	4036 1611 01	GUIDE	ガイド		C	1	

SCANNER DRIVE SECTION

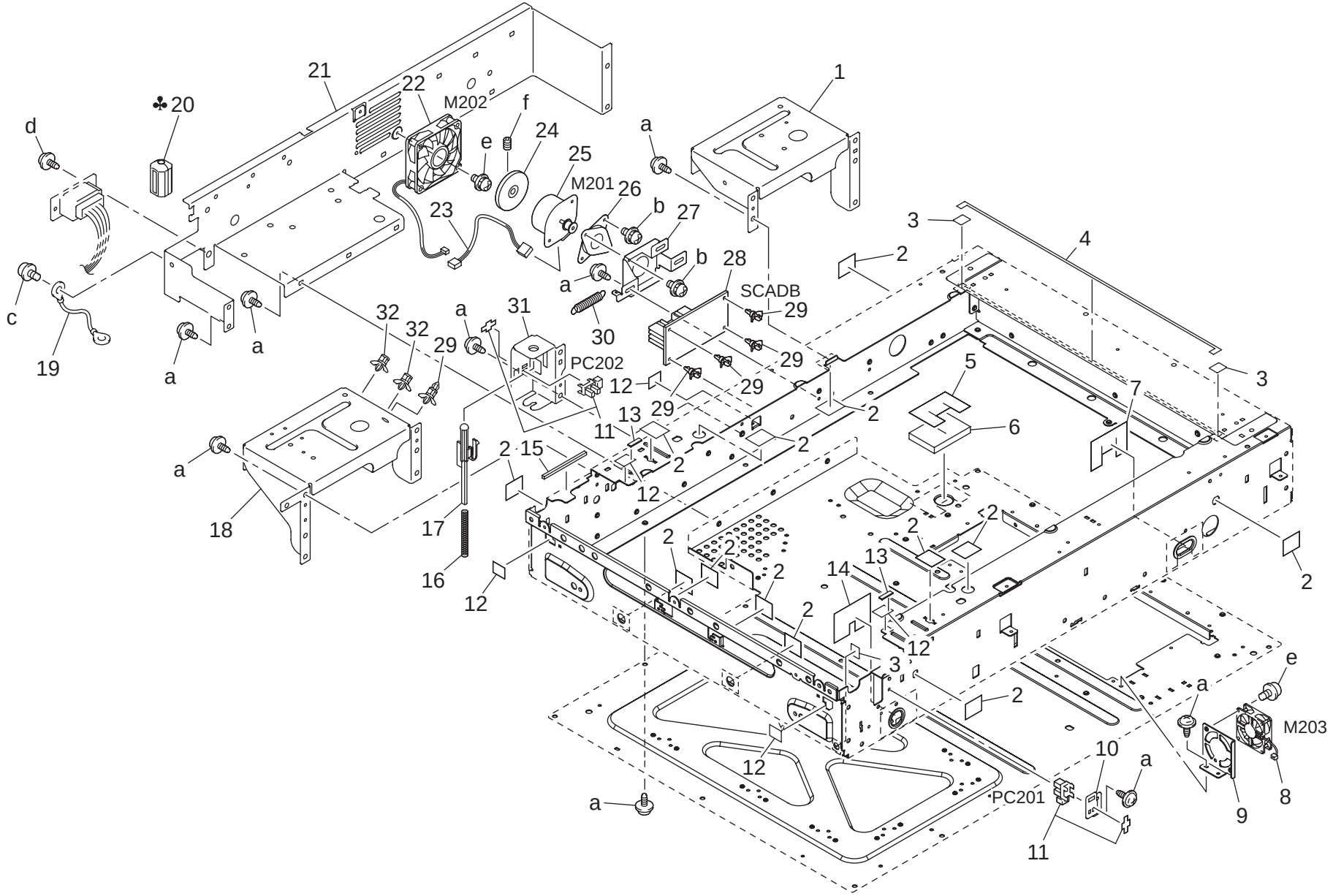

Key	Part No.	Description		Destinations	Class	QTY	Standard parts
1	9J06 1369 01	FRAME	フレーム		D	1	a-9735 0306 14
2	4581 1625 01	SEAL	シール		C	13	b-9646 0306 14
3	9J06 1635 00	SEAL	シール（ガラス右角）		C	3	c-9646 0408 14
4	9J06 1636 00	SEAL	シール（ガラス右）		C	1	d-9735 0308 14
5	4038 1513 01	SEAL	シール		C	1	e-9646 0320 14
6	4038 1512 01	SEAL	シール		C	1	f-9684 0304 08
7	4036 1632 02	SEAL	シール		C	1	
8	9313 1500 21	FAN MOTOR	ファンモータ		C	1	
9	9J06 1591 01	BRACKET	取付板		D	1	
10	9J06 1328 01	BRACKET	取付板		D	1	
11	4037 0903 01	PHOTO INTERRUPTER	フォトインタラプター		B	2	
12	4581 1627 01	SEAL	シール		C	5	
13	9J06 1598 00	SEAL	シール（基準側）		C	2	
14	4036 1631 01	SEAL	シール		C	1	
15	9J06 1332 01	SEAL	シール		C	1	
16	4036 1720 01	PRESSURE SPRING	圧縮コイルばね		C	1	
17	9J06 1721 01	LEVER	レバー		C	1	
18	9J06 1370 02	FRAME	フレーム（ＡＤＦ 左）		D	1	
19	4036 6860 01	WIRE HARNESS ASSY	ハーネス ＡＳＳＹ		D	1	
20	9326 1810 21	FERRITE CORE	フェライトコア	C,D1,D3,F2,G1,H,I,J,K	D	1	
20	9326 1810 21	FERRITE CORE	フェライトコア	F1{bizhub C352}	D	1	
21	9J06 1371 01	REINFORCE PLATE	補強板		D	1	
22	9313 1300 41	FAN MOTOR	ファンモータ		C	1	
23	4038 6863 01	WIRE HARNESS ASSY	ハーネス ＡＳＳＹ		D	1	
24	4005 1320 01	DUMPER	ダンパ		C	1	
25	9314 1910 83	MOTOR	パルスモータ		C	1	
26	9J06 1471 01	CUSHION	防振材		C	1	
27	4038 1457 01	BRACKET	取付板		D	1	
28	4038 0115 01	SCADB	ＳＣＡＤＢ		I	1	
29	9384 1900 57	PWB SUPPORT 9.53H	キハ゛ンサホ゜ート		D	5	
30	4002 1458 01	TENSION SPRING	引張コイルばね		C	1	
31	9J06 1722 02	BRACKET	取付板		D	1	
32	9384 1900 55	PWB SUPPORT 9.53H	キハ゛ンサホ゜ート		D	2	

SCANNER DRIVE SECTION

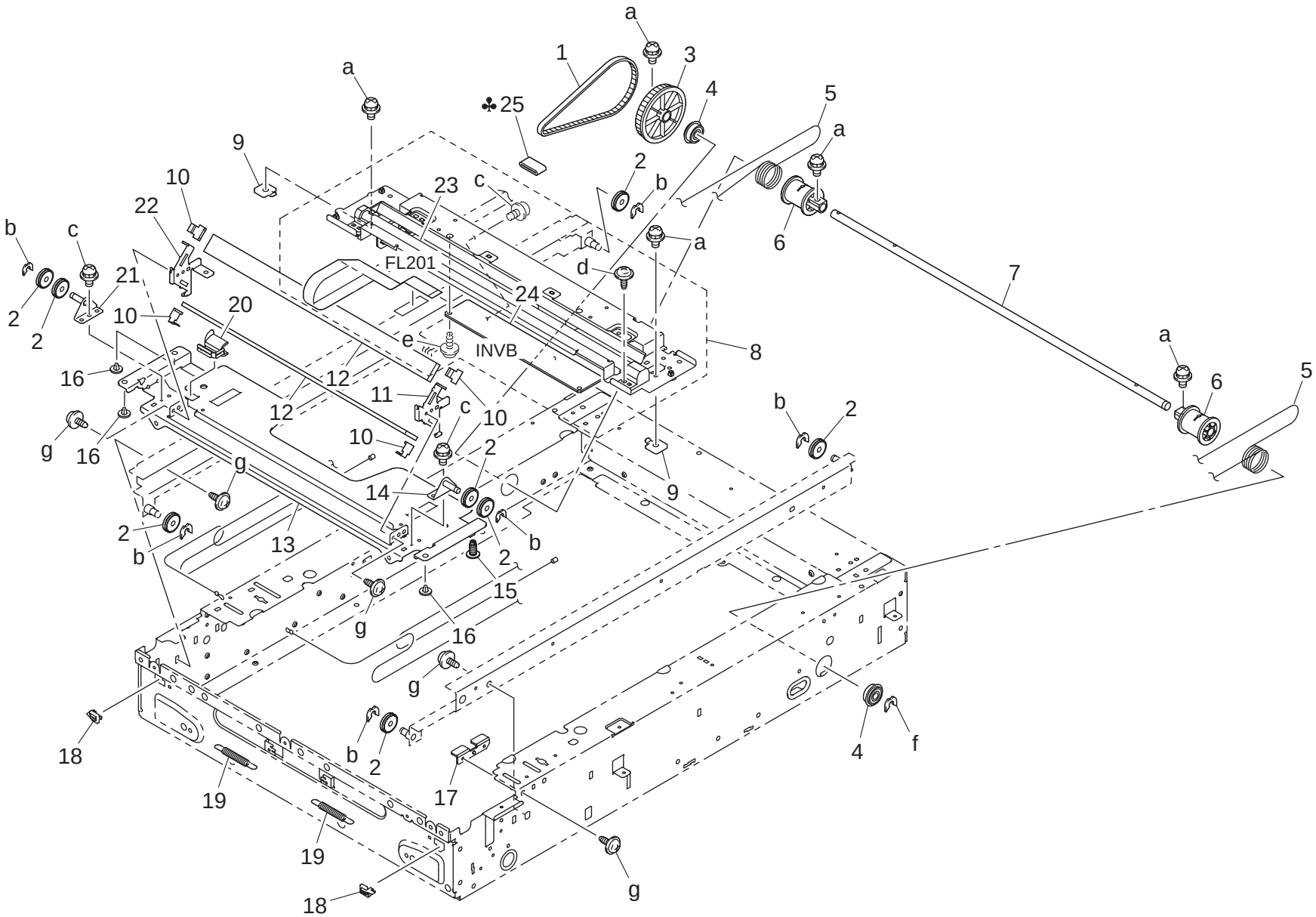

Key	Part No.	Description		Destinations	Class	QTY	Standard parts
1	4038 1454 01	TIMING BELT 251L	タイミングベルト　２５１ Ｌ		C	1	a-9646 0408 14
2	4005 1464 01	PULLEY	プーリ		C	8	b-4425 3001 01
3	4581 1453 01	PULLEY 118T	プーリ　１１８ Ｔ		C	1	c-9646 0306 14
4	4002 1456 01	BALL BEARING	軸受		C	2	d-9735 0308 14
5	9J06 1451 01	WIRE	ワイヤ		C	2	e-9739 0308 14
6	4581 1452 01	PULLEY	プーリ		C	2	f-1066 1151 01
7	4581 1455 01	SHAFT	シャフト		D	1	g-9735 0306 14
8	9J06 R720 00	FIRST SLIDER ASSY	第１スライダー ＡＳＳＹ		I	1	
9	4581 3806 01	SET PLATE	押え板		D	2	
10	4002 1423 01	HOLDER	ホルダ		D	4	
11	4581 1427 01	HOLD PLATE	保持板		D	1	
12	4002 1422 02	MIRROR	ミラー		C	2	
13	4038 1421 02	FRAME	フレーム		D	1	
14	4036 1425 01	BRACKET	取付板		D	1	
15	4002 1481 01	BUSHING	ブッシュ		C	1	
16	4002 1480 01	BUSHING	ブッシュ		C	3	
17	9J06 1373 01	REINFORCE PLATE	補強板		D	1	
18	1139 1612 01	GUIDE	ワイヤーガイド		D	2	
19	4581 1640 02	SPRING	ばね		C	2	
20	4581 1429 01	GUIDE	ガイド		D	1	
21	4005 0203 01	BRACKET ASSY	取付板 ＡＳＳＹ		D	1	
22	4581 1428 01	HOLD PLATE	保持板		D	1	
23	9351 3300 11	LAMP	ランプ		I	1	
24	9325 4400 21	INVB	ＩＮＶＢ		C	1	
25	9326 1001 11	FERRITE CORE	フェライトコア	C,D1,D3,F2,G1,H,I,J,K	D	1	
25	9326 1001 11	FERRITE CORE	フェライトコア	F1{bizhub C352}	D	1	

Key	Part No.	Description		Destinations	Class	QTY	Standard parts
1	9J06 1553 03	COVER	カバー（読取ガラス）		C	1	a-9646 0408 14
2	9J06 1559 01	COVER	カバー		C	1	b-9735 0306 14
3	9J06 1568 01	LABEL	ラベル（ＩＲ 注意）		C	1	
4	9J06 R728 00	SHEET ASSY	段差シート ＡＳＳＹ		C	1	
5	9J06 R702 00	GLASS MOVEMENT UNIT	ガラス移動ユニット		C	1	
6	9J06 1589 00	COLLAR	カラー		C	1	
7	9J06 1569 02	SCREW	ねじ		C	2	
8	9J06 1594 00	SPACER(0.2)	スペーサ（０．２）		C	9	
9	9J06 1593 00	SPACER(0.1)	スペーサ（０．１）		C	3	

OPTICAL SECTION

P 7

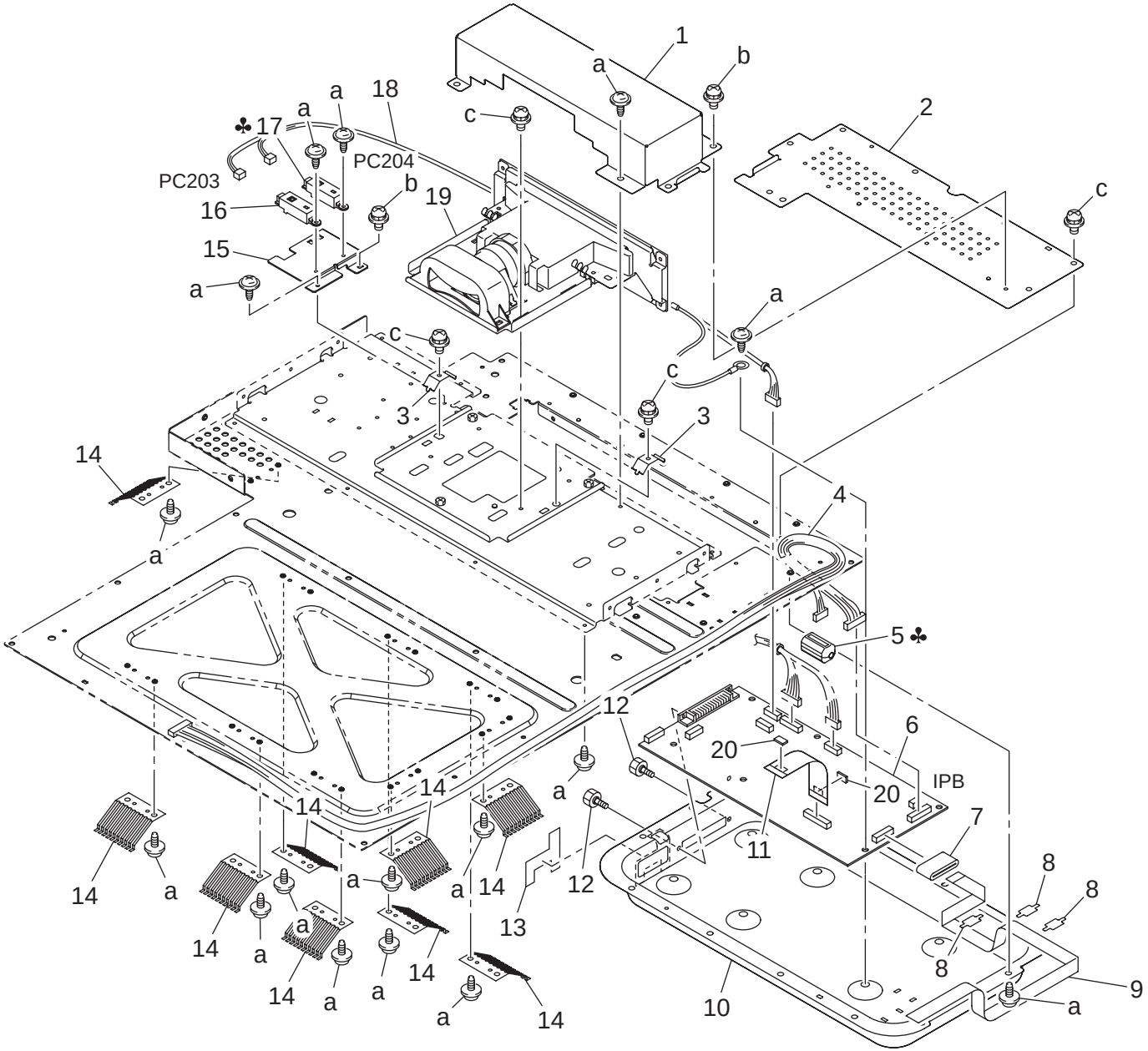

Key	Part No.	Description		Destinations	Class	QTY	Standard parts
1	4036 1582 01	COVER	カバー		D	1	a-9735 0306 14
2	4036 1366 01	COVER	カバー		D	1	b-9646 0308 14
3	4581 1579 01	PLATE SPRING	板ばね		D	2	c-9646 0306 14
4	9J06 6817 01	WIRE HARNESS ASSY	ハーネス ＡＳＳＹ		D	1	
5	9326 1200 61	FERRITE CORE	フェライトコア	C,D1,D3,F2,G1,H,I,J,K	D	1	
5	9326 1200 61	FERRITE CORE	フェライトコア	F1{bizhub C352}	D	1	
6	9J06 0113 03	IPB	ＩＰＢ		I	1	
7	9326 1001 11	FERRITE CORE	フェライトコア		D	1	
8	4581 1316 01	SEAL	シール		C	3	
9	4038 6864 01	WIRE HARNESS ASSY	ハーネス ＡＳＳＹ		C	1	
10	4036 1374 02	PLATE	底板		D	1	
11	4037 6819 01	WIRE HARNESS ASSY	ハーネス ＡＳＳＹ		C	1	
12	4581 2269 04	SHOULDER SCREW	段ねじ		C	2	
13	4036 1633 01	SEAL	シール		C	1	
14	4038 1510 01	PLATE SPRING	板ばね		D	9	
15	9J06 1590 01	BRACKET	取付板		D	1	
16	9335 1400 81	SOLID STATE SWITCH	反射型フォトスイッチ		C	1	
17	9335 1400 81	SOLID STATE SWITCH	反射型フォトスイッチ	D1,D3,F2,G1,I,K	C	1	
17	9335 1400 81	SOLID STATE SWITCH	反射型フォトスイッチ	F1{bizhub C352}	C	1	
17	9335 1400 81	SOLID STATE SWITCH	反射型フォトスイッチ	A1,B,C,G2,H,J(OPTION)	C	1	
18	4037 6854 01	WIRE HARNESS ASSY	ハーネス ＡＳＳＹ		D	1	
19	9J06 R721 00	LENS/CCD ASSY	レンズ・ＣＣＤ　ＡＳＳＹ		I	1	
20	4025 2175 01	CUSHION	クッション		C	2	

IR FRAME

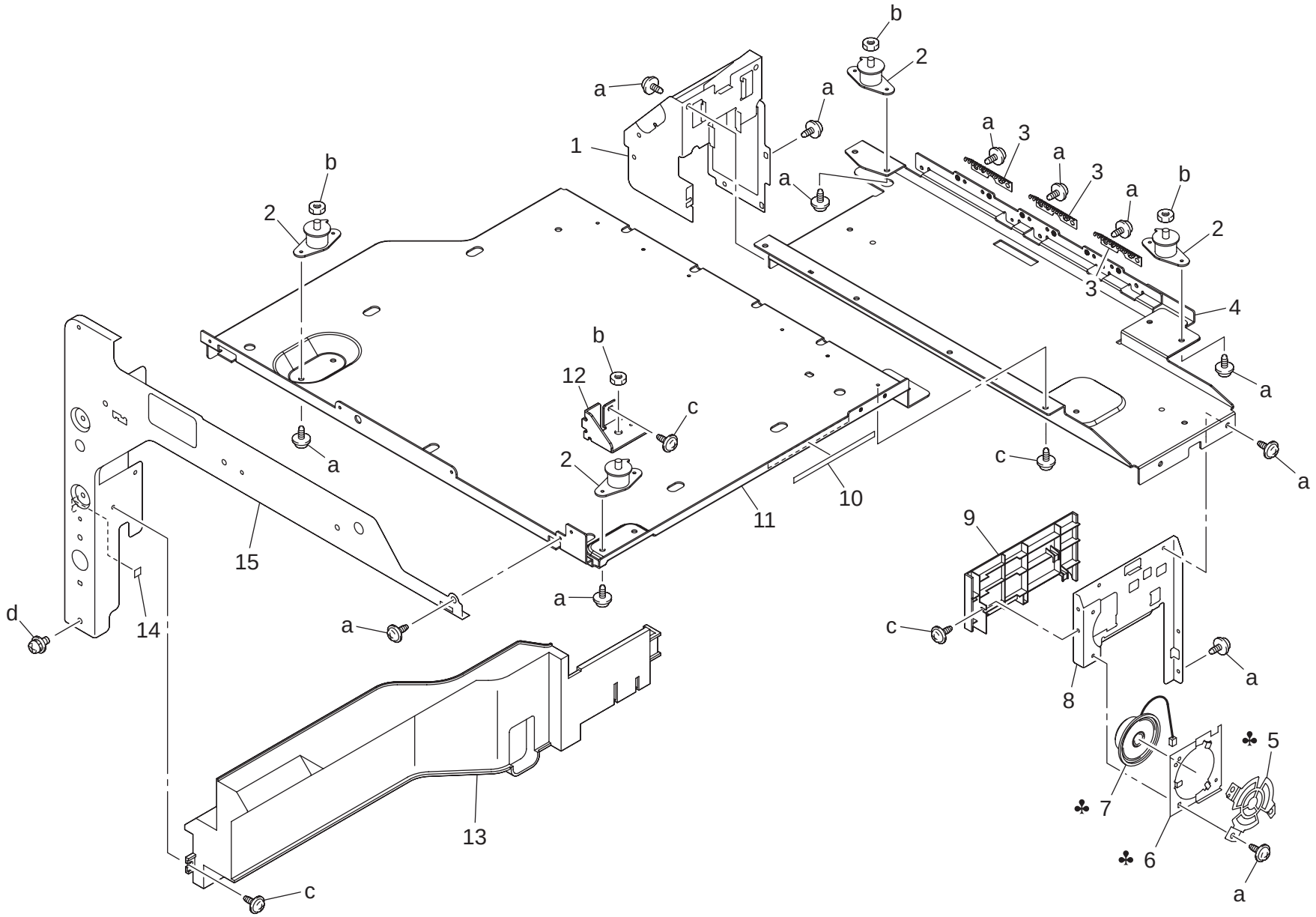

Key	Part No.	Description		Destinations	Class	QTY	Standard parts
1	4038 1501 02	HOLD PLATE	保持板		D	1	a-9735 0306 14
2	9J06 1515 01	CUSHION	防振材		C	4	b-9660 0600 14
3	4036 1509 01	PLATE SPRING	板ばね		D	3	c-9735 0308 14
4	4038 0180 01	HOLD PLATE ASSY	保持板 ＡＳＳＹ		D	1	d-9646 0306 14
5	4037 1535 01	BRACKET	取付板	A1	D	1	
5	4037 1535 01	BRACKET	取付板	B,C,D1,D3,F1,F2,G1,G2, H,I,J,K{bizhub C352}	D	1	
6	4037 1536 02	BRACKET	取付板	A1	D	1	
6	4037 1536 02	BRACKET	取付板	B,C,D1,D3,F1,F2,G1,G2, H,I,J,K{bizhub C352}	D	1	
7	4037 6727 01	LOUDSPEAKER	スピーカ	A1	D	1	
7	4037 6727 01	LOUDSPEAKER	スピーカ	B,C,D1,D3,F1,F2,G1,G2, H,I,J,K{bizhub C352}	D	1	
8	4038 1500 01	HOLD PLATE	保持板		D	1	
9	4038 1402 01	COVER	カバー		C	1	
10	9J06 1599 00	SEAL	シール（底板）		C	1	
11	4038 1504 02	HOLD PLATE	保持板		D	1	
12	4038 1508 02	BRACKET	取付板		D	1	
13	4038 1403 02	COVER	カバー		C	1	
14	4037 7001 00	SPACER	スペーサ		C	1	
15	4038 1503 04	HOLD PLATE	保持板（ＩＲ 左上）		D	1	

MAIN FRAME

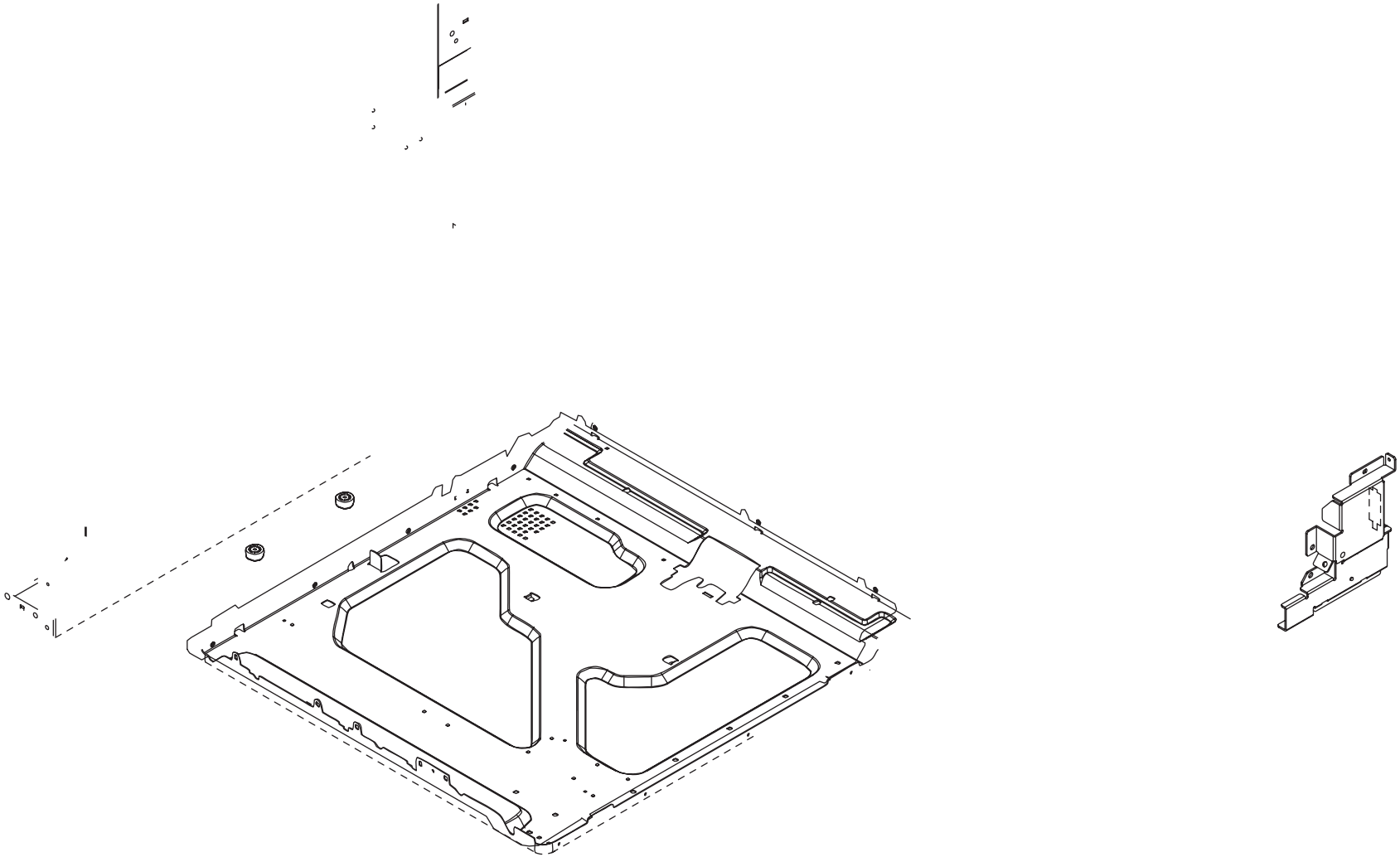

Key	Part No.	Description		Destinations	Class	QTY	Standard parts
1	1154 4670 01	PROTECTION	保護材		C	2	a-9735 0306 14 b-9735 0312 14 c-9739 0410 14 d-9739 0308 14
2	4039 2210 01	SEAL	シール		C	1	
3	4038 3595 01	SPACER	スペーサ		D	1	
4	9332 1710 41	SWITCH	押釦スイッチ		C	1	
5	4038 2065 17	BRACKET	取付板		D	1	
6	4128 2215 01	COVER	カバー		D	1	
7	4038 2066 12	COVER	カバー		D	1	
8	4154 3804 01	SCREW	ねじ		C	7	
9	4038 2036 01	CAP	キャップ		C	1	
10	4038 2073 01	REINFORCE PLATE	補強板		D	1	
11	9J06 2456 01	SEAL	シール		C	1	
12	9J06 2455 01	DUCT	ダクト		D	1	
13	9313 1000 72	FAN MOTOR	ファンモータ		C	1	
14	9J06 2457 01	BRACKET	取付板		D	1	
15	9J06 6807 04	WIRE HARNESS ASSY	ハーネス ＡＳＳＹ		D	1	
16	0996 3055 01	RUBBER FOOT	コ゛ムアシ		C	2	
17	4038 2097 02	SEAL	シール		C	1	
18	4039 2209 01	SEAL	シール		C	1	

INNER COVER SECTION

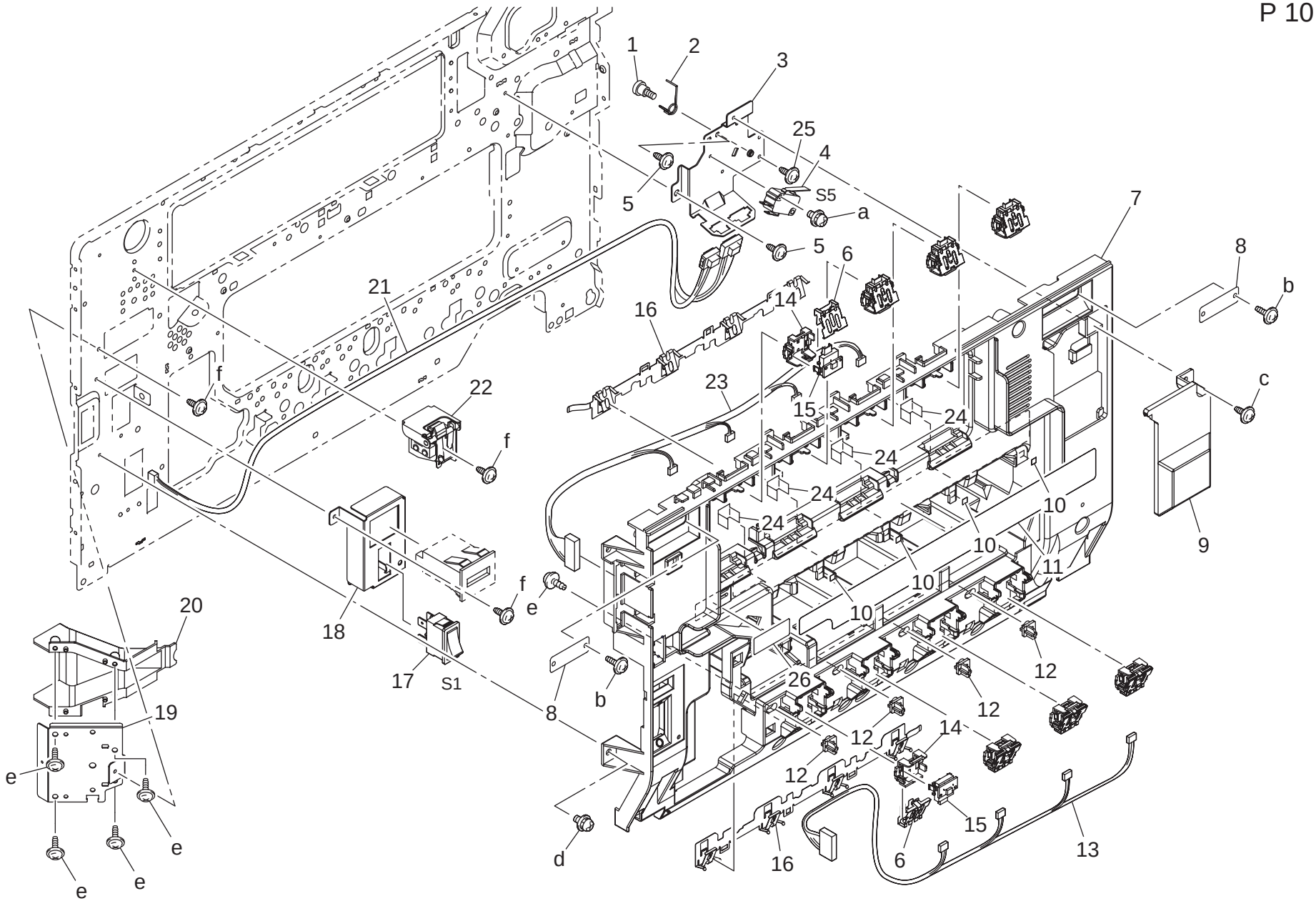

Key	Part No.	Description		Destinations	Class	QTY	Standard parts
1	4038 2287 01	SHOULDER SCREW	段ねじ		C	1	a-9646 0316 14
2	4038 2266 01	TORSION SPRING	ねじりコイルばね		C	1	b-9739 0308 14
3	4038 2265 04	BRACKET	取付板（右扉安全 ＳＷ）		D	1	c-9735 0308 14
4	9331 2200 21	MICRO-SWITCH	レバー付マイクロスイッチ		C	1	d-9646 0308 14
5	4154 3804 01	SCREW	ねじ		C	2	e-9739 0306 14
6	4038 2282 03	PLATE SPRING	板ばね		D	8	f-9735 0306 14
7	9J06 1101 05	COVER	カバー（２次）		D	1	
8	4038 1014 01	SUCTION PLATE	吸着板		D	2	
9	4038 1102 02	COVER	カバー		C	1	
10	4038 7309 01	LABEL	ラベル		D	4	
11	4038 7308 02	LABEL TC IU	ラベル　ＴＣ　ＩＵ　挿入目標		D	1	
12	4038 1105 01	HOLDER	ホルダ		D	4	
13	4038 6816 01	WIRE HARNESS ASSY	ハーネス ＡＳＳＹ		D	1	
14	4038 2281 03	HOLDER	ホルダ		D	8	
15	4136 6751 01	CONNECTOR PIN	基板用コネクタポスト		D	8	
16	4038 2283 02	PLATE SPRING	板ばね		D	2	
17	9332 5400 11	SEESAW-SWITCH	波形スイッチ		C	1	
18	9J06 2305 01	BRACKET	取付板		D	1	
19	9J06 2467 01	BRACKET	取付板		D	1	
20	9J06 2466 01	DUCT	ダクト		D	1	
21	4038 6811 02	WIRE HARNESS ASSY	ハーネス ＡＳＳＹ		D	1	
22	4131 0326 01	FRONT COVER SW ASSY	前扉 ＳＷ　ＡＳＳＹ		C	1	
23	4038 6815 02	WIRE HARNESS ASSY	ハーネス ＡＳＳＹ		D	1	
24	9J06 2460 01	COVER	カバー		C	4	
25	4106 2063 01	SCREW	ねじ		C	1	
26	9J06 1014 00	SEAL	シール（Ｄ）		C	1	

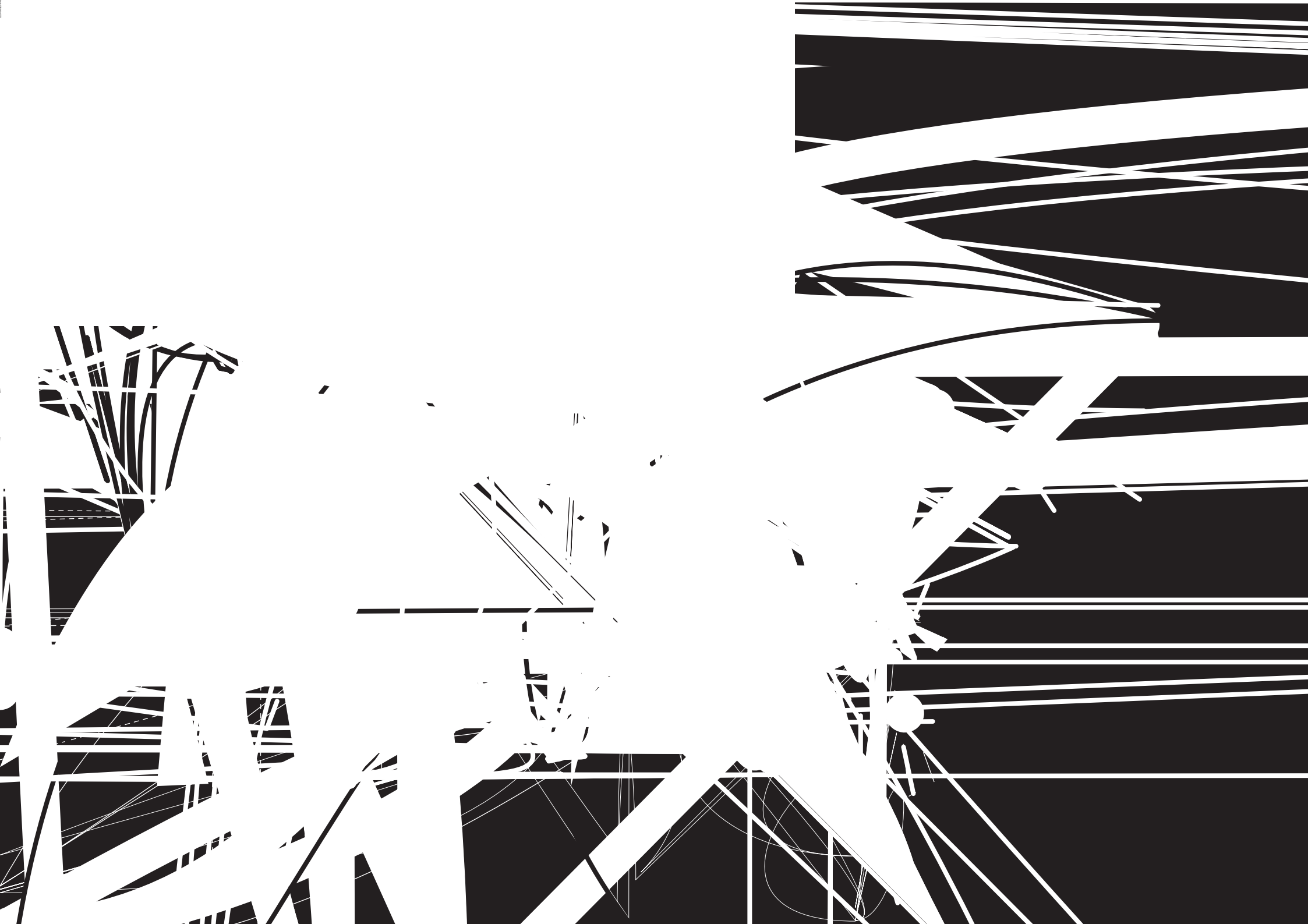

Key	Part No.	Description		Destinations	Class	QTY	Standard parts
1	4038 3541 01	PLATE SPRING	板ばね		D	1	a-9739 0410 14
2	4038 2099 01	CONTACT	接点		D	1	b-9739 0308 14
3	1164 3053 12	SHOULDER SCREW	段ねじ		C	1	c-9732 0308 14
4	4004 3029 01	RAIL	レール		D	1	d-9735 0306 14
5	4038 6829 01	WIRE HARNESS ASSY	ハーネス ＡＳＳＹ		D	1	e-9735 0408 14
6	4004 3063 01	TENSION SPRING	引張コイルばね		C	1	f-9739 0408 14
7	9J06 R901 00	PHOTO INTERUPPTER	フォトインタラプタ		B	1	g-9735 0308 14
8	4004 3062 06	HOLDER	ホルダ		D	1	h-9646 0408 14
9	1164 3027 01	ACTUATOR	アクチュエータ		C	1	
10	9335 1400 61	SOLID STATE SWITCH	透過型フォトスイッチ		B	1	
11	4004 3061 01	ACTUATOR	アクチュエータ		C	1	
12	4038 2162 02	CUSHION	クッション		C	2	
13	4038 2008 02	RAIL	レール		C	1	
14	4038 2408 01	REINFORCE PLATE	補強板		D	1	
15	1164 3020 03	LEVER	レバー		C	1	
16	4037 0104 01	PSDTB	ＰＳＤＴＢ		C	1	
17	4004 3052 01	SPACER	スペーサ		D	1	
18	1164 3022 02	HOLDER	ホルダー		D	1	
19	4037 0904 01	PHOTO INTERRUPTER	フォトインタラプター		B	2	
20	4004 3011 01	BRACKET	取付板		D	1	
21	4004 3012 01	LEVER	レバー		C	1	
22	4038 3054 01	PLATE SPRING	板ばね		C	1	
23	1164 3054 01	PLATE SPRING	板ばね		C	1	
24	9J06 6811 01	WIRE HARNESS ASSY	ハーネス ＡＳＳＹ		D	1	
25	4037 0103 01	MFDTB	ＭＦＤＴＢ		C	1	
26	1164 2080 01	HOLDER	ホルダ		D	1	
27	9J06 2464 01	GUIDE	ガイド		D	1	

MANUAL FEED SECTION

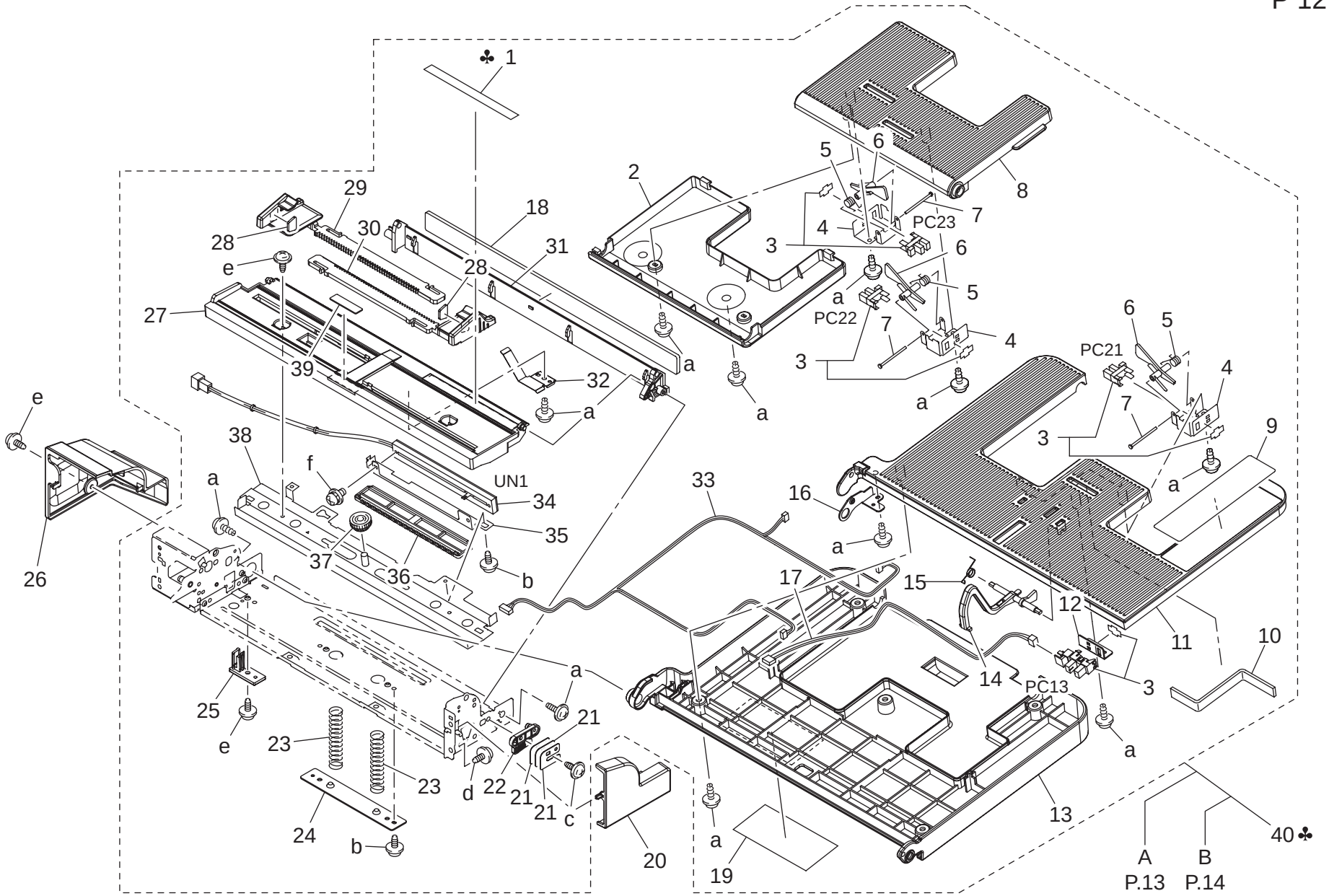

Key	Part No.	Description		Destinations	Class	QTY	Standard parts
1	4038 7351 01	SCALE METRIC	手差しスケール　メトリック	A1,C,D1,D3,F2,G1,H,I,J ,K	C	1	a-9739 0308 14 b-9735 0306 14 c-9735 0310 14 d-9735 0408 14 e-9735 0308 14 f-9646 0306 14
1	4038 7351 01	SCALE METRIC	手差しスケール　メトリック	F1{bizhub C352}	C	1	
1	4038 7352 01	SCALE INCH	手差しスケール　インチ	B,G2	C	1	
2	9J06 3282 01	COVER	カバー		C	1	
3	4037 0906 01	PHOTO INTERRUPTER	フォトインタラプター		B	4	
4	4030 3414 01	BRACKET	取付板		D	3	
5	4030 3446 01	TORSION SPRING	ねじりコイルばね		C	3	
6	4030 3415 02	ACTUATOR	アクチュエータ		C	3	
7	1134 3042 02	SHAFT	シャフト		D	3	
8	9J06 3281 02	TRAY	トレイ		C	1	
9	9J06 7303 01	LABEL	ラベル		C	1	
10	9J06 3287 00	SEAL	シール（ハーネス押さえ）		C	1	
11	9J06 3284 03	COVER	カバー（トレイ）		C	1	
12	9J06 3235 01	BRACKET	取付板		D	1	
13	9J06 3283 04	TRAY	トレイ（マルチ手差し）		C	1	
14	4038 3233 02	ACTUATOR	アクチュエータ		C	1	
15	4038 3234 01	TORSION SPRING	ねじりコイルばね		C	1	
16	9J06 3285 01	BRACKET	取付板		D	1	
17	9J06 6813 01	WIRE HARNESS ASSY	ハーネス ＡＳＳＹ		D	1	
18	9J06 6211 00	CUSHION	クッション（マル手トレイ）		C	1	
19	9J06 7354 01	LABEL	ラベル		C	1	
20	4038 3212 04	COVER	カバー		C	1	
21	9J06 3286 02	PLATE SPRING	板ばね（トレイ保持）		D	3	
22	9J06 3215 02	HOLD PLATE	保持板		D	1	
23	4038 3252 01	PRESSURE SPRING	圧縮コイルばね		C	2	
24	4038 3253 01	HOLD PLATE	保持板		D	1	
25	9J06 3256 01	GUIDE	ガイド		C	1	
26	9J06 3213 01	COVER	カバー		C	1	
27	9J06 3251 04	LIFTING PLATE	押上板		D	1	
28	4038 3286 01	BRAKE	ブレーキ材		C	2	
29	4038 3221 03	REGULATING PLATE	規制板		C	1	
30	4038 3222 03	REGULATING PLATE	規制板		C	1	
31	9J06 3214 02	HOLDER	ホルダ		D	1	
32	4038 3255 01	BRAKE	ブレーキ材		D	1	
33	9J06 6810 01	WIRE HARNESS ASSY	ハーネス ＡＳＳＹ		D	1	
34	4037 6899 01	RESISTOR	テイコウキ		D	1	
35	4038 3272 01	BRACKET	取付板		D	1	
36	4030 3460 02	RACK	ラック		C	1	
37	4030 3412 01	GEAR 13/18T	ギヤ　１３／１８ Ｔ		C	1	
38	4038 0252 03	BRACKET ASSY	取付板 ＡＳＳＹ		D	1	
39	4687 3281 01	FRICTION SHEET	摩擦板		C	1	
40	9J06 R717 00	MANUAL FEED TRAY UNIT	マルチ手差し	A1,C,D1,D3,F2,G1,H,I,J ,K	S	1	
40	9J06 R717 00	MANUAL FEED TRAY UNIT	マルチ手差し	F1{bizhub C352}	S	1	
40	9J06 R735 00	MANUAL FEED TRAY UNIT	マルチ手差し	B,G2	S	1	

MANUAL FEED SECTION

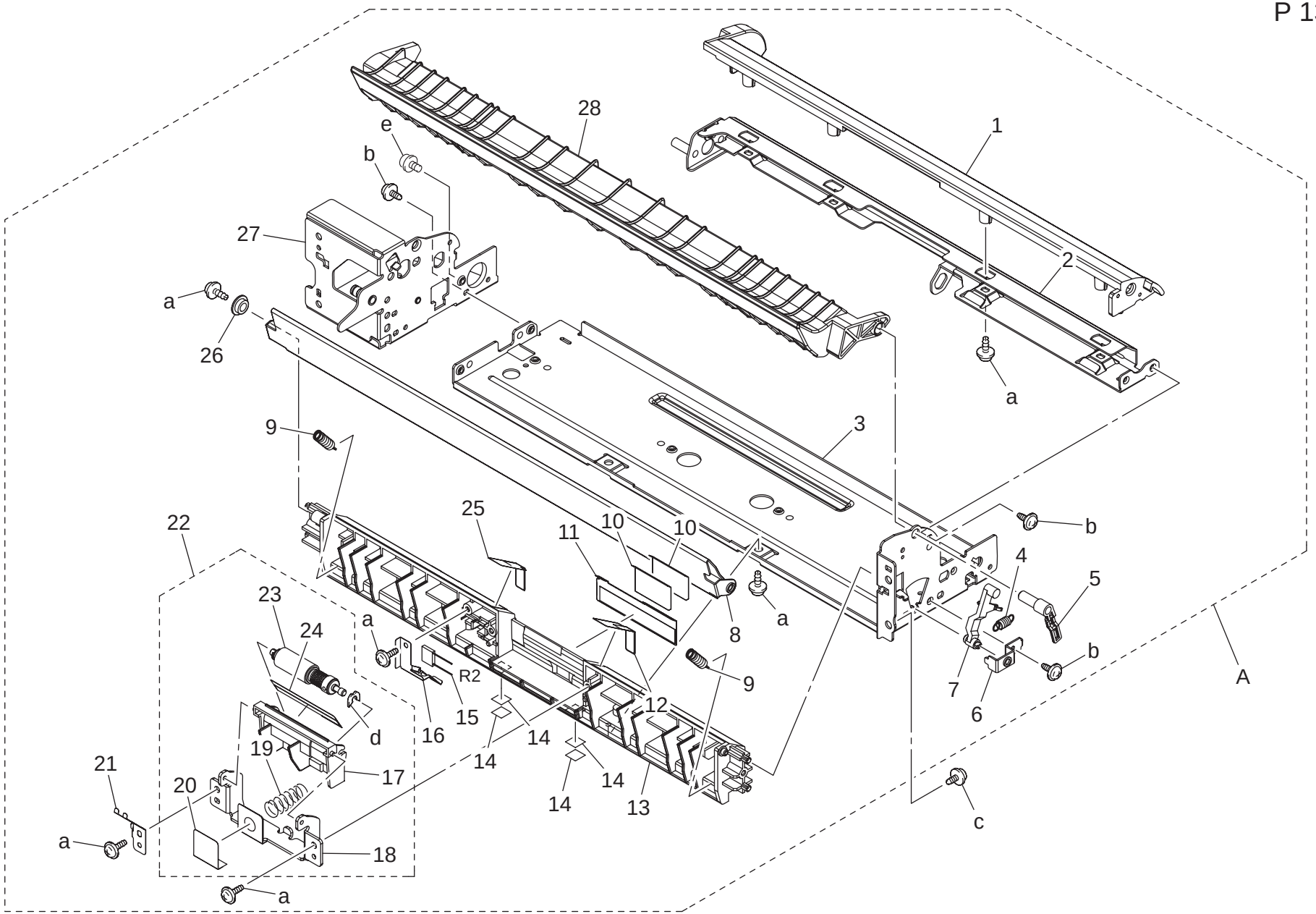

Key	Part No.	Description		Destinations	Class	QTY	Standard parts
1	4038 3205 01	COVER	カバー		D	1	a-9739 0308 14
2	4038 3207 03	BRACKET	取付板		D	1	b-9735 0306 14
3	9J06 3208 02	FRAME	フレーム（Ｆ）		D	1	c-9735 0408 14
4	4038 3217 01	TENSION SPRING	引張コイルばね		C	1	d-4425 3002 01
5	4038 3216 03	LEVER	レバー		C	1	e-9646 0306 14
6	4038 3220 01	HOLD PLATE	保持板		D	1	
7	4038 3218 01	LEVER	レバー		C	1	
8	4038 3228 03	GUIDE	ガイド		C	1	
9	4038 3263 01	TENSION SPRING	引張コイルばね		C	2	
10	4030 3403 01	GUIDE	ガイド		C	2	
11	4038 5653 00	GUIDE PLATE	ガイド板		C	1	
12	4038 3268 02	GUIDE	ガイド		C	1	
13	4038 3204 04	GUIDE	ガイド		C	1	
14	4037 7001 00	SPACER	スペーサ		C	4	
15	9455 8076 01	RESISTOR	その他固定抵抗器		D	1	
16	4038 3266 01	EARTH GROUND	アース		D	1	
17	4038 3261 02	HOLDER	ホルダ		D	1	
18	4038 3262 03	BRACKET	取付板		D	1	
19	4030 3475 01	PRESSURE SPRING	圧縮コイルばね		C	1	
20	4038 3270 01	GUIDE	ガイド		C	1	
21	4038 3265 01	EARTH GROUND	アース		D	1	
22	9J06 R718 00	ROLLER ASSY	マルチ手差しサバキローラー ＡＳＳＹ		C	1	
23	4034 0151 01	SEPARATION ROLLER	分離ローラ		A	1	
24	4038 3267 01	GUIDE	ガイド		C	1	
25	4038 3269 02	GUIDE	ガイド		C	1	
26	4038 5651 00	COLLAR	カラー		C	1	
27	9J06 0202 03	FRAME ASSY	フレーム ＡＳＳＹ		D	1	
28	4038 3231 02	GUIDE	ガイド		C	1	

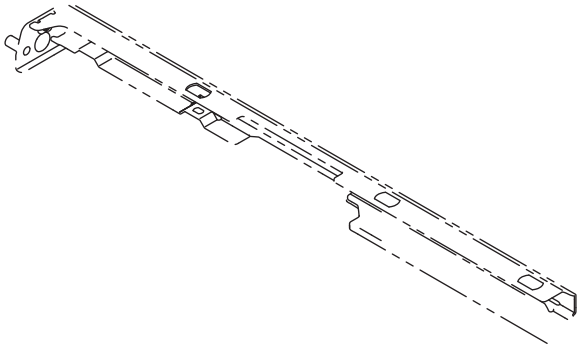

Key	Part No.	Description		Destinations	Class	QTY	Standard parts
1	4038 3260 01	CLUTCH ASSY	クラッチ ＡＳＳＹ		C	1	a-9735 0306 14
2	4038 3240 01	SHAFT	シャフト		D	1	b-9721 0400 01
3	1274 2611 01	BUSHING	シ゛クウケ		C	2	c-9739 0308 14
4	4038 3246 01	GEAR 30T	ギヤ　３０Ｔ		C	1	d-9721 0600 01
5	4038 3247 01	GEAR 30T	ギヤ　３０Ｔ		C	1	e-4425 3002 01
6	4131 3532 02	BUSHING	軸受		C	1	f-4425 3001 01
7	4038 3236 01	CAM	カム		C	1	g-9752 2010 50
8	4131 3001 01	ROLLER	ローラ		A	1	
9	4142 3217 01	STOP RING	止め輪		C	1	
10	4038 3232 01	SHAFT	シャフト		D	1	
11	1075 2565 01	GEAR 25T	ギヤ　２５Ｔ		C	1	
12	9322 1200 32	CLUTCH	クラッチ		C	1	
13	9321 2400 61	SOLENOID	フラッパーソレノイド		C	1	
14	4038 3244 02	BRACKET	取付板		D	1	
15	9J06 3249 01	BRACKET	取付板		D	1	
16	9335 1300 61	PHOTO INTERRUPTER	フォトインタラプタ		B	1	
17	4004 5339 01	BUSHING	軸受		C	1	
18	4038 3237 01	SHIELD PLATE	遮光板		D	1	

P/H FRAME SECTION

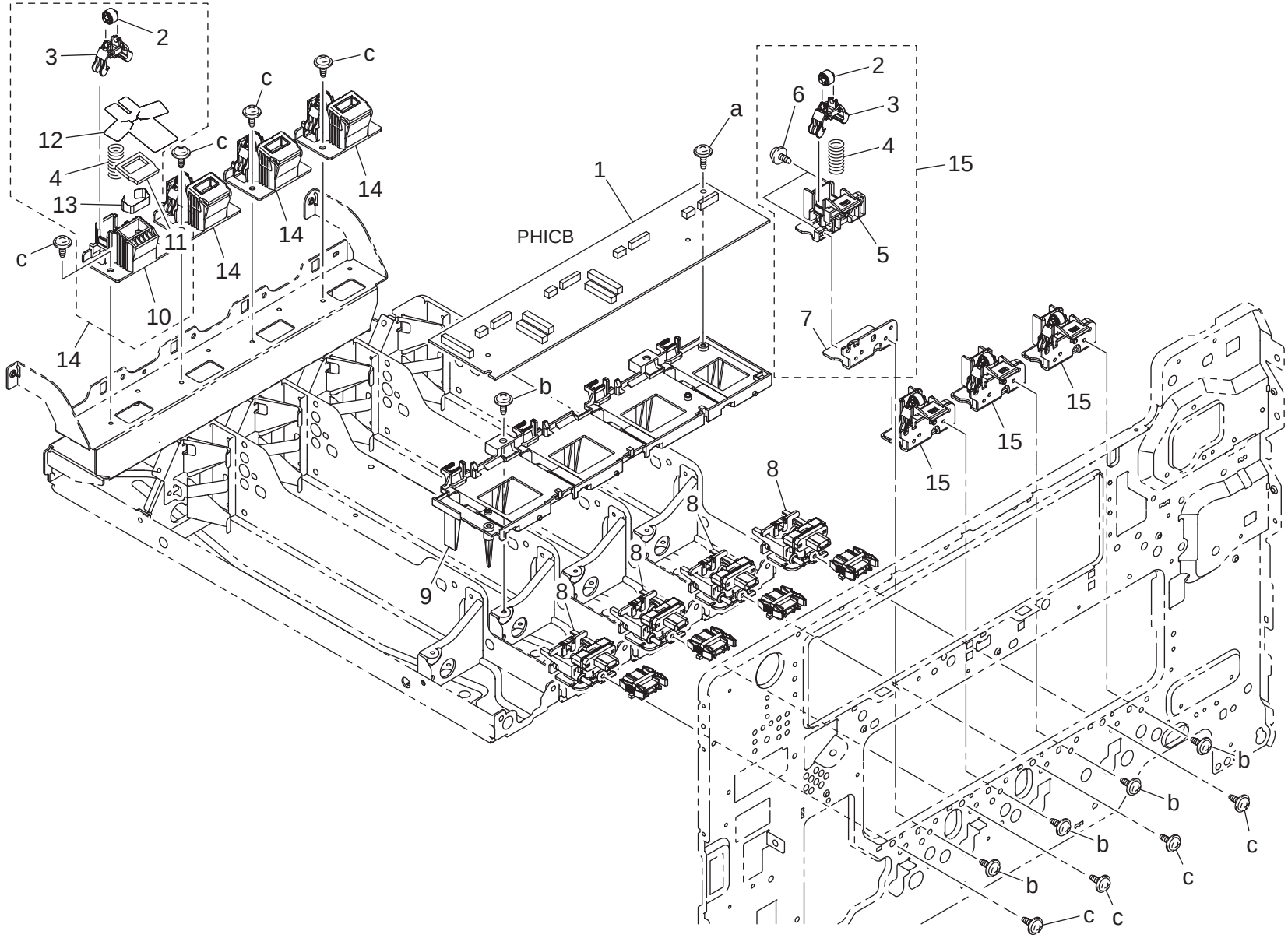

Key	Part No.	Description		Destinations	Class	QTY	Standard parts
1	4038 0105 03	PHICB	ＰＨＩＣＢ		I	1	a-9739 0308 14 b-9735 0308 14 c-9735 0306 14
2	4038 2094 01	ROLL	ころ		C	8	
3	4038 2016 02	LIFTING PLATE	押上板		D	8	
4	4038 2017 01	PRESSURE SPRING	圧縮コイルばね		C	8	
5	4038 2018 03	HOLDER	ホルダ		D	4	
6	4154 3804 01	SCREW	ねじ		C	8	
7	4038 2061 01	BRACKET	取付板		D	4	
8	9J06 R719 00	CONNECTOR ASSY	ＡＴＤＣドロア ＡＳＳＹ		C	4	
9	4038 2249 02	HOLDER	ホルダ		D	1	
10	4038 2060 02	HOLDER	ホルダ		D	4	
11	4038 2067 01	SEAL	シール		C	4	
12	4038 2051 01	SEAL	シール		C	4	
13	9J06 2086 01	PLATE SPRING	板ばね		D	4	
14	4038 R705 00	PU LIFT REAR ASSY	ＰＵ 押上　後 ＡＳＳＹ		C	4	
15	9J06 R730 00	PU LIFT FRONT ASSY	ＰＵ 押上　前 ＡＳＳＹ		C	4	

P/H FRAME SECTION

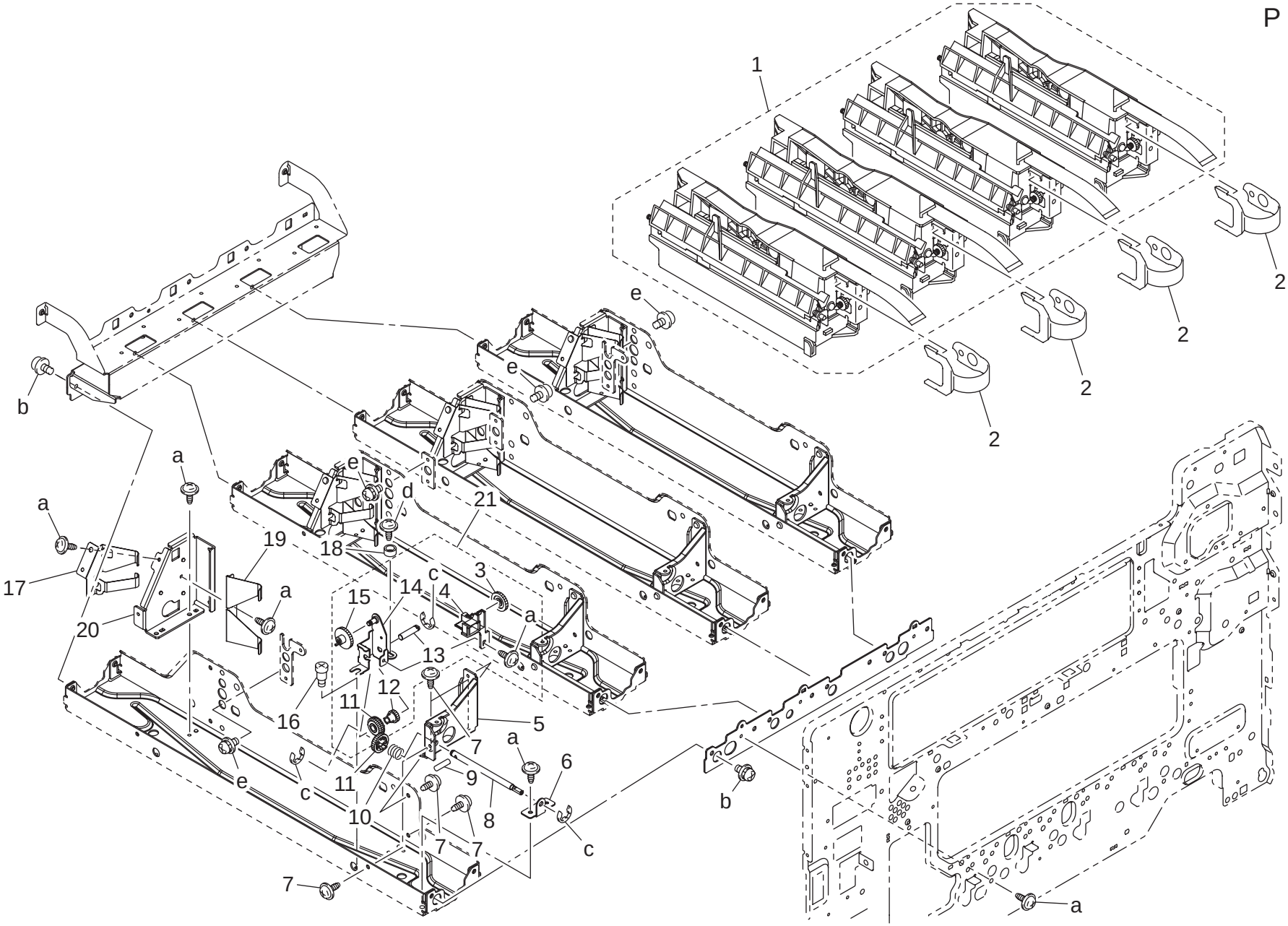

Key	Part No.	Description		Destinations	Class	QTY	Standard parts
1	9J06 R727 00	PRINTER HEAD UNIT	Ｐ ／ Ｈ		I	1	a-9735 0306 14 b-9646 0308 14 c-9721 0300 01 d-9735 0308 14 e-9646 0306 14
2	4038 1906 04	PLATE SPRING	板ばね		C	4	
3	4038 2189 01	GEAR 27T	ギヤ　２７ Ｔ		C	4	
4	4038 2187 04	GUIDE	ガイド		D	4	
5	4038 2044 02	REINFORCE PLATE	補強板		D	4	
6	4038 2194 01	BRACKET	取付板		D	4	
7	4106 2063 01	SCREW	ねじ		C	20	
8	4038 2193 03	SHAFT	シャフト		D	4	
9	1067 2501 01	PIN	ヒ゜ン		C	4	
10	4038 2196 01	PRESSURE SPRING	圧縮コイルばね		C	4	
11	4038 2191 02	GEAR 16T	ギヤ　１６ Ｔ		C	8	
12	4038 2190 03	GEAR 16T	ギヤ　１６ Ｔ		C	4	
13	4038 2192 02	SHAFT	シャフト		D	4	
14	4038 0211 04	BRACKET ASSY	取付板 ＡＳＳＹ		D	4	
15	4038 2188 02	GEAR 30T	ギヤ　３０ Ｔ		C	4	
16	4038 2184 01	SHOULDER SCREW	段ねじ		C	4	
17	4038 2180 01	CONTACT	接点		D	4	
18	4038 2179 01	WASHER	ワッシャ		C	4	
19	4038 2042 01	SPRING	ばね		D	4	
20	4038 2043 03	BRACKET	取付板		D	4	
21	9J06 R711 00	SKEW ADJUSTMENT ASSY	スキュー調整 ＡＳＳＹ		S	4	

T/C RAIL SECTION

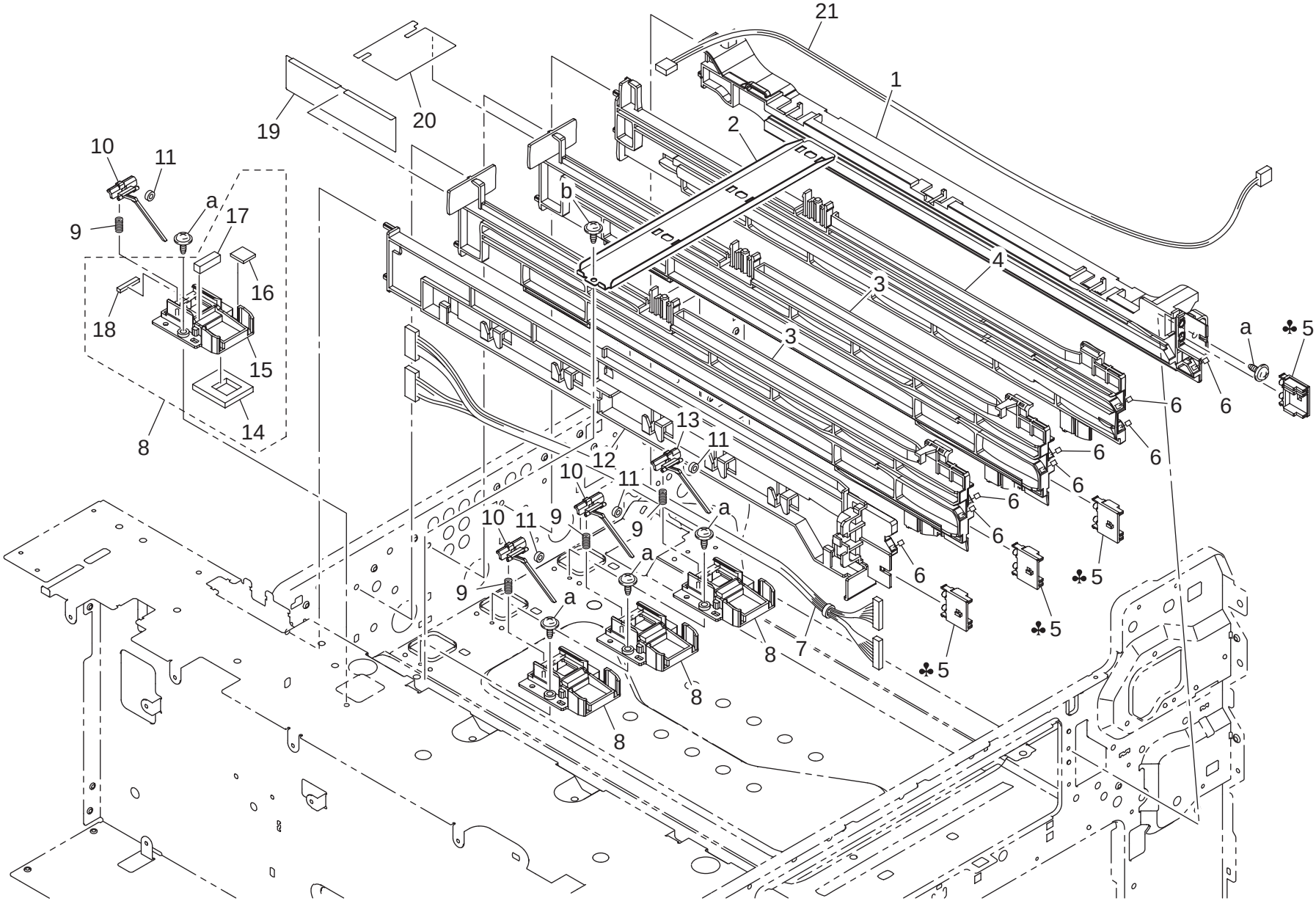

Key	Part No.	Description		Destinations	Class	QTY	Standard parts
1	9J06 2019 02	RAIL	レール		D	1	a-9735 0308 14
2	4038 2038 02	SET PLATE	押え板		D	1	b-9735 0306 14
3	4038 2021 03	RAIL	レール		D	2	
4	4038 2020 02	RAIL	レール		D	1	
5	4038 2173 02	PAWL	爪	A1	D	4	
5	4038 2174 03	PAWL	爪	B,G2	D	4	
5	4038 2175 02	PAWL	爪	C,D1,D3,F2,G1,H,I,J,K	D	4	
5	4038 2175 02	PAWL	爪	F1{bizhub C352}	D	4	
6	4038 7316 01	LABEL	ラベル		D	8	
7	9J06 N100 00	WIRE HARNESSASSY	ハーネス ＡＳＳＹ		D	1	
8	4038 R706 00	GUIDE ASSY	ガイド ＡＳＳＹ		C	4	
9	4038 2109 01	PRESSURE SPRING	圧縮コイルばね		C	4	
10	4038 2108 01	STIRRING MEMBER	撹拌材		C	3	
11	4038 2150 01	SEAL	シール		C	4	
12	4038 2022 02	RAIL	レール		D	1	
13	4038 1271 00	LEVER	撹拌材（Ｔ ／ Ｃ ガイド・Ｋ）		C	1	
14	4038 2102 01	SEAL	シール		C	4	
15	4038 2107 03	GUIDE	ガイド		D	4	
16	4039 2208 01	SEAL	シール		C	4	
17	4038 2110 03	SEAL	シール		C	4	
18	9J06 1013 00	SEAL	シール（Ｃ）		C	4	
19	9J06 1011 00	SEAL	シール（Ａ）		C	1	
20	9J06 1012 00	SEAL	シール（Ｂ）		C	1	
21	4038 6840 02	WIRE HARNESS ASSY	ハーネス ＡＳＳＹ		D	1	

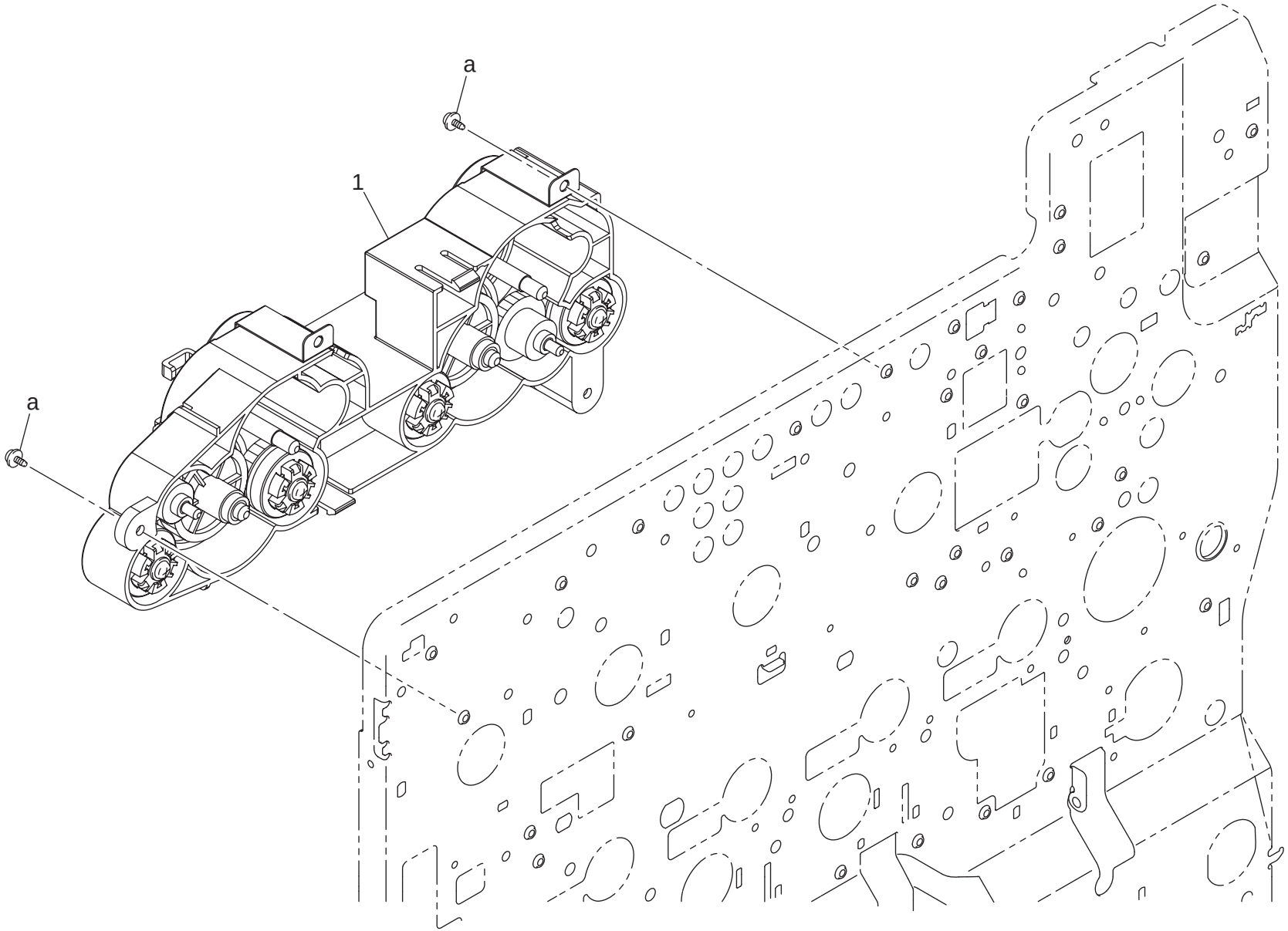
a
1
a

Key	Part No.	Description		Destinations	Class	QTY	Standard parts
1	9J06 R709 00	DRIVE ASSY	ホッパー駆動 ＡＳＳＹ		C	1	a-9735 0308 14

CONTACT SECTION

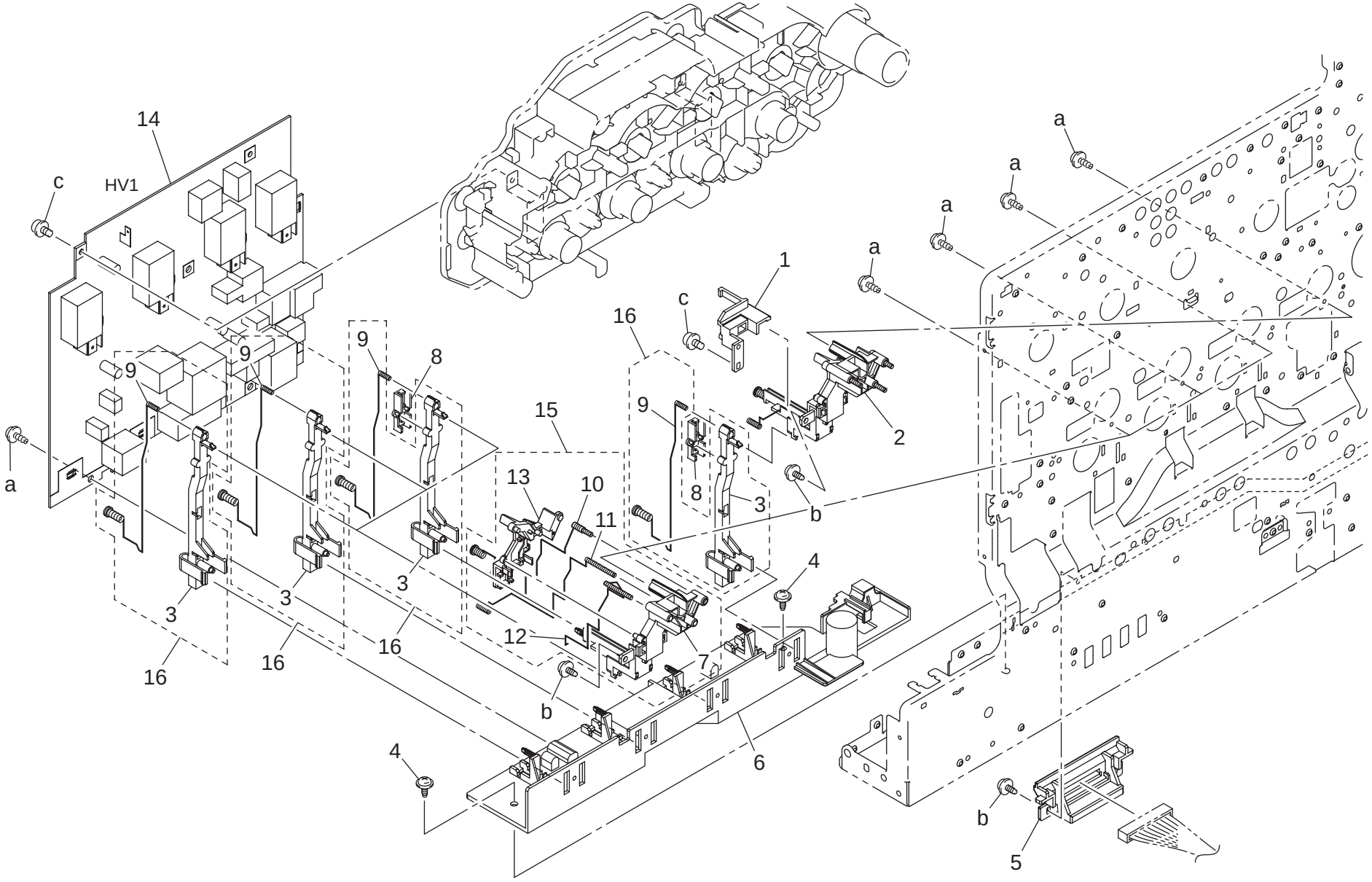

Key	Part No.	Description		Destinations	Class	QTY	Standard parts
1	4038 2275 01	HOLDER	ホルダ		D	1	a-9739 0308 14 b-9735 0308 14 c-9646 0308 14
2	9J06 R714 00	IU CONTACT PLATE ASSY	ＩＵ 接点		C	1	
3	4038 2233 02	HOLDER	ホルダ		D	4	
4	4154 3804 01	SCREW	ねじ		C	2	
5	4038 2313 01	HOLDER	ホルダ		C	1	
6	4038 2206 02	HOLDER	ホルダ		D	1	
7	4038 2274 01	HOLDER	ホルダ		D	3	
8	4038 2255 01	COVER	カバー		D	2	
9	4038 2222 01	CONTACT	接点		C	4	
10	4038 2277 01	CONTACT	接点		C	3	
11	4038 2276 01	CONTACT	接点		C	3	
12	4038 2225 02	CONTACT	接点		C	3	
13	4038 2232 01	COVER	カバー		D	3	
14	9J06 6203 02	HV1	ＨＶ １		I	1	
15	4038 R708 00	CONTACT B ASSY	接点　Ｂ　ＡＳＳＹ		C	3	
16	4038 R707 00	CONTACT ASSY	接点　ＡＳＳＹ		C	4	

TONER PIPE SECTION

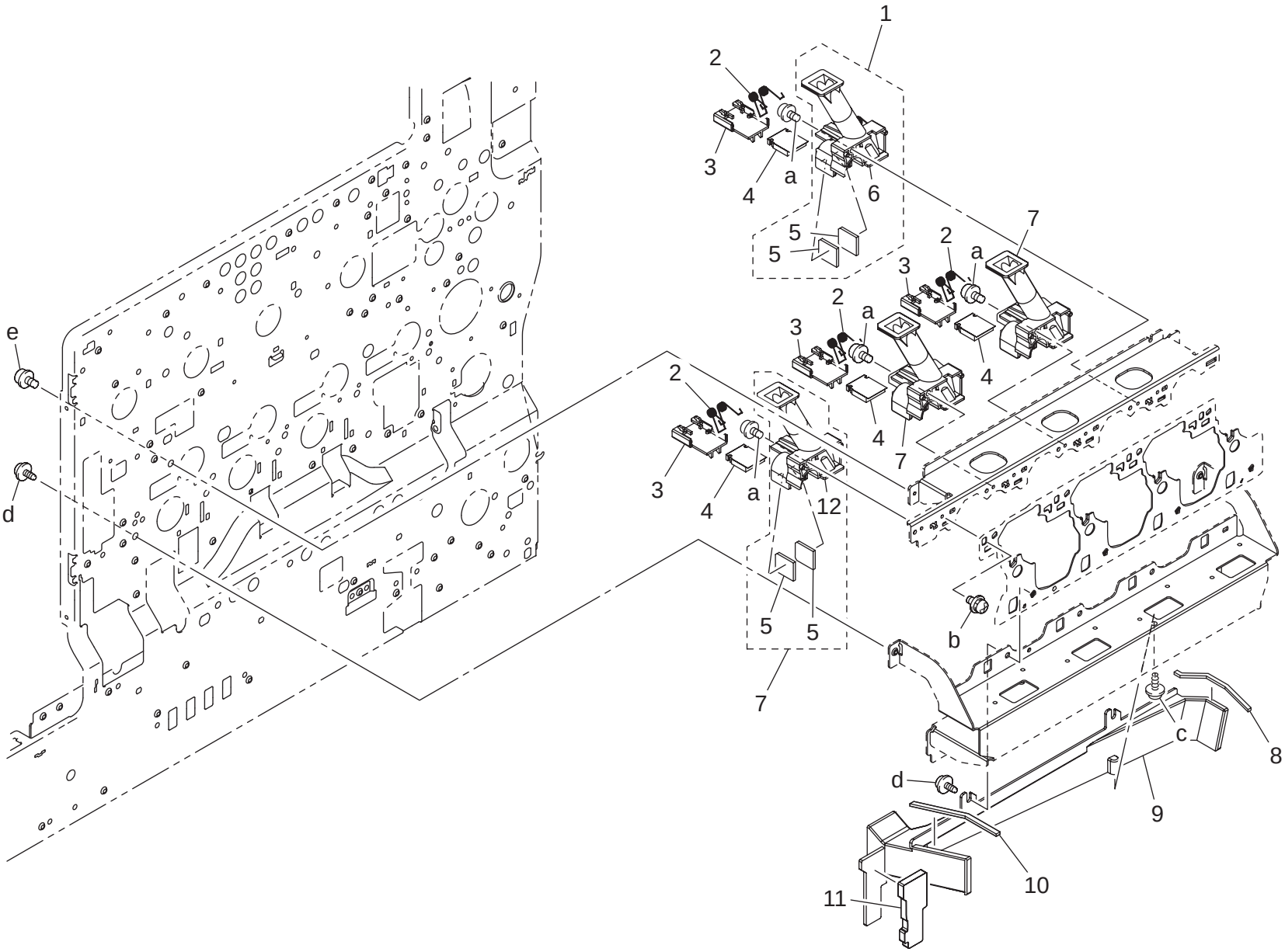

Key	Part No.	Description		Destinations	Class	QTY	Standard parts
1	4038 R709 00	PIPE K ASSY	パイプ Ｋ　ＡＳＳＹ		C	1	a-9646 0316 14
2	4038 2105 03	TORSION SPRING	ねじりコイルばね		C	4	b-9646 0308 14
3	4038 2103 04	SHUTTER	シャッタ		D	4	c-9739 0308 14
4	4038 2104 02	SEAL	シール		C	4	d-9735 0306 14
5	4038 2151 02	SEAL	シール		C	8	e-9646 0306 14
6	4038 2101 01	PIPE	パイプ		D	1	
7	4038 R710 00	PIPE YMC ASSY	パイプ ＹＭＣ　ＡＳＳＹ		C	3	
8	4038 2056 02	SEAL	シール		C	1	
9	4038 2052 02	DUCT	ダクト		D	1	
10	4038 2053 02	SEAL	シール		C	1	
11	4038 2081 02	SEAL	シール		C	1	
12	4038 2106 01	PIPE	パイプ		D	3	

ERASER SECTION

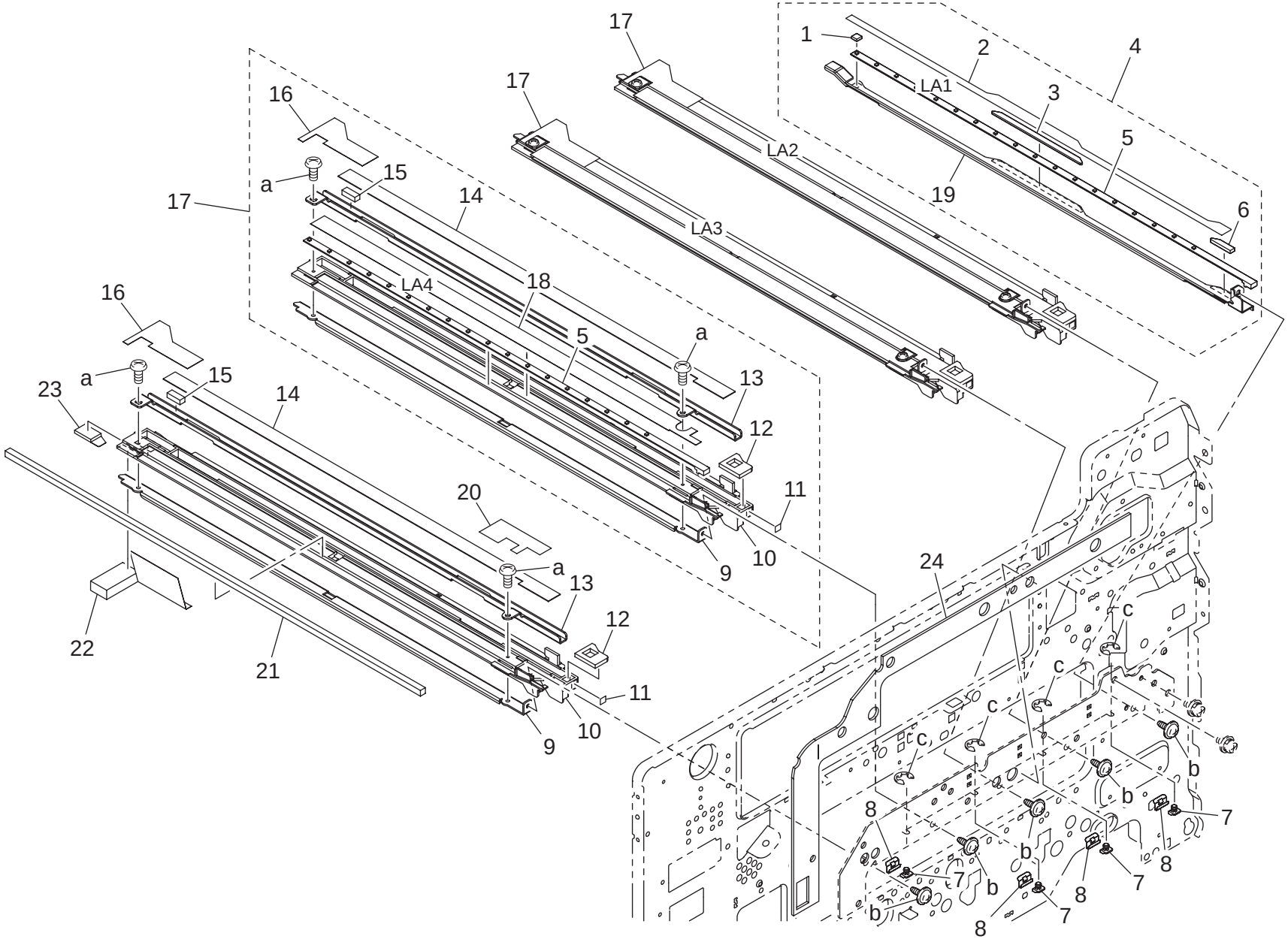

Key	Part No.	Description		Destinations	Class	QTY	Standard parts
1	4038 2183 01	BRACKET	取付板		D	1	a-9743 0308 14
2	4038 2199 02	SHIELD PLATE	遮光材		C	1	b-9735 0306 14
3	4038 2182 01	BRACKET	取付板		D	1	c-9721 0300 01
4	9J06 R732 00	ERASER K ASSY	イレーサ　Ｋ　ＡＳＳＹ		C	1	
5	9353 2400 11	LED PILOT LAMP	発光ダイオード		C	4	
6	4038 2181 01	BRACKET	取付板		D	1	
7	4038 2069 01	SLIDER	すべり材		C	4	
8	4038 2072 04	PLATE SPRING	板ばね（前 Ｖ 字）		C	4	
9	4038 2040 01	REINFORCE PLATE	補強板		D	4	
10	4038 2014 08	RAIL	レール		D	4	
11	4038 7309 01	LABEL	ラベル		D	4	
12	9J06 2461 01	SEAL	シール		C	4	
13	9J06 2032 00	REINFORCE PLATE	補強板		D	4	
14	9J06 2459 03	COVER	カバー（トナー吸引）		C	4	
15	9J06 2472 00	SEAL	シール（補強板）		C	4	
16	9J06 2473 00	SEAL	シール		C	4	
17	9J06 R731 00	ERASER YMC ASSY	イレーサ　ＹＭＣ　ＡＳＳＹ		C	3	
18	4038 2198 02	SHIELD PLATE	遮光材		C	3	
19	4038 2015 02	BRACKET	取付板		D	1	
20	9J06 1010 00	SEAL	シール（トナー吸引）		C	1	
21	9J06 1015 01	SEAL	シール（Ｅ）		C	1	
22	9J06 1017 00	SEAL	シール（ＩＵ レール奥）		C	1	
23	9J06 1016 00	SEAL	シール（ＩＵ レール下）		C	1	
24	9J06 2458 01	SEAL	シール		C	1	

DEVELOPMENT DRIVE SECTION

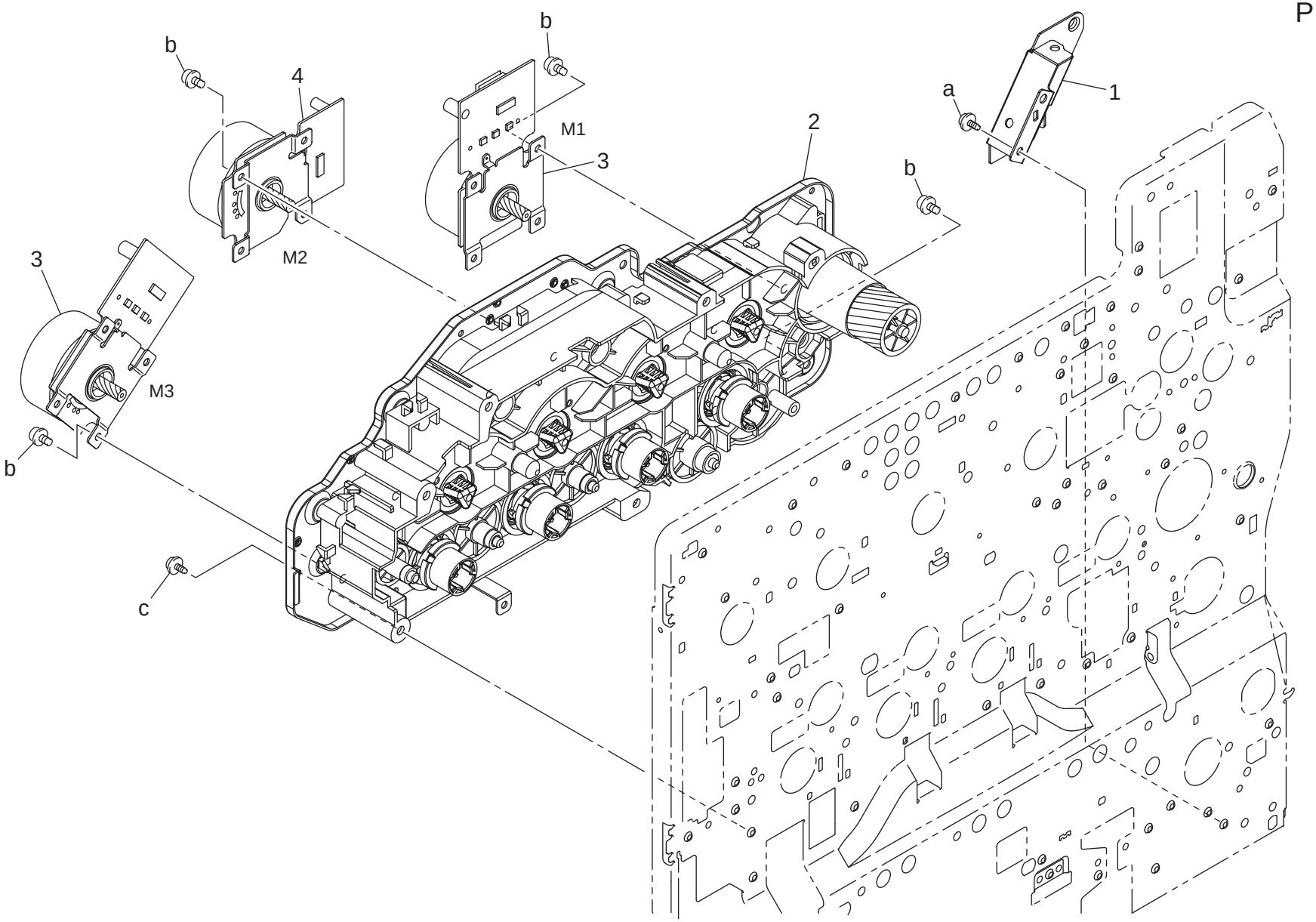

Key	Part No.	Description		Destinations	Class	QTY	Standard parts
1	4038 3517 02	REINFORCE PLATE	補強板		D	1	a-9735 0306 14
2	9J06 R710 00	DRIVE ASSY	現像駆動 ＡＳＳＹ		C	1	b-9646 0306 14
3	9314 2500 11	MOTOR	ブラシレスモータ		B	2	c-9735 0308 14
4	9314 2300 12	MOTOR	ブラシレスモータ		B	1	

TRANSFER BELT SECTION

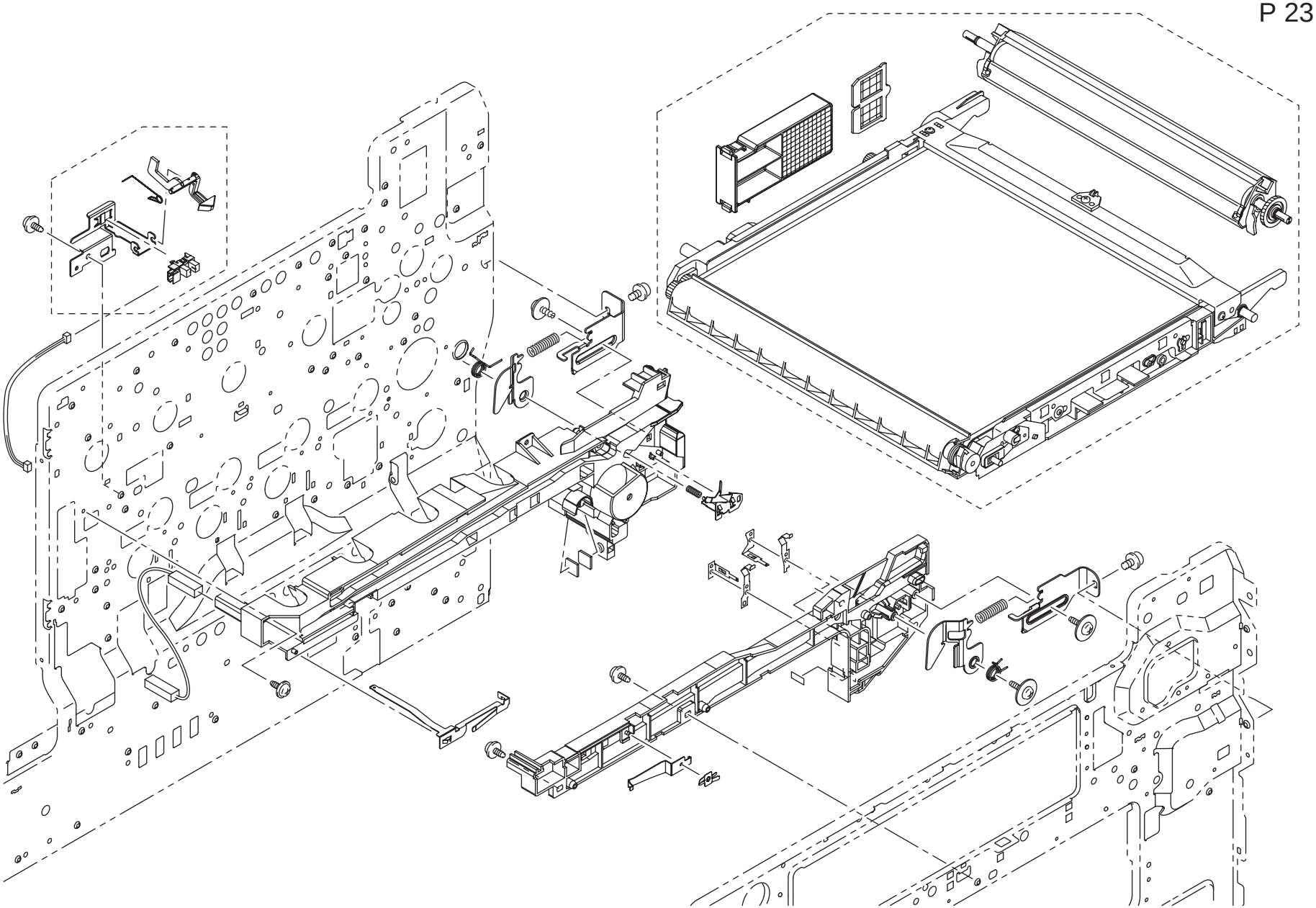

Key	Part No.	Description		Destinations	Class	QTY	Standard parts
1	4038 2023 18	RAIL	レール（中転・Ｆ）		D	1	a-9646 0408 14 b-9735 0308 14 c-9735 0306 14 d-9732 0308 14
2	4038 2029 01	PRESSURE SPRING	圧縮コイルばね		C	2	
3	4038 2046 01	LEVER	レバー		C	1	
4	4163 5293 01	SCREW	ねじ		C	4	
5	4038 2048 01	TORSION SPRING	ねじりコイルばね		C	1	
6	4038 2047 02	ARM	アーム		C	1	
7	4038 3594 01	SPACER	スペーサ		C	1	
8	4038 2080 01	CONTACT	接点		C	1	
9	4038 2045 01	PLATE SPRING	板ばね		D	1	
10	4154 3804 01	SCREW	ねじ		C	4	
11	4038 2077 13	CONTACT	接点（新品検知１）		C	1	
12	4038 2152 13	CONTACT	接点（新品検知３）		C	1	
13	4038 2153 13	CONTACT	接点（新品検知４）		C	1	
14	4038 2078 13	CONTACT	接点（新品検知２）		C	1	
15	4038 2205 02	CONTACT	接点		C	1	
16	4038 2207 01	PRESSURE SPRING	圧縮コイルばね		C	1	
17	4038 2151 02	SEAL	シール		C	2	
18	4038 2217 01	CONTACT	接点		C	1	
19	4038 2024 02	RAIL	レール		D	1	
20	4038 6836 01	WIRE HARNESS ASSY	ハーネス ＡＳＳＹ		D	1	
21	4038 2027 01	ARM	アーム		C	1	
22	4038 2028 01	TORSION SPRING	ねじりコイルばね		C	1	
23	4038 2026 01	LEVER	レバー		C	1	
24	9J06 R704 00	TRANSFER KIT	転写部キット		A	1	
25	9J06 R715 00	SWITCH ASSY	１次転写離間検出スイッチ ＡＳＳＹ		C	1	
26	4038 6835 01	WIRE HARNESS ASSY	ハーネス ＡＳＳＹ		D	1	

PAPER TRANSPORT SECTION

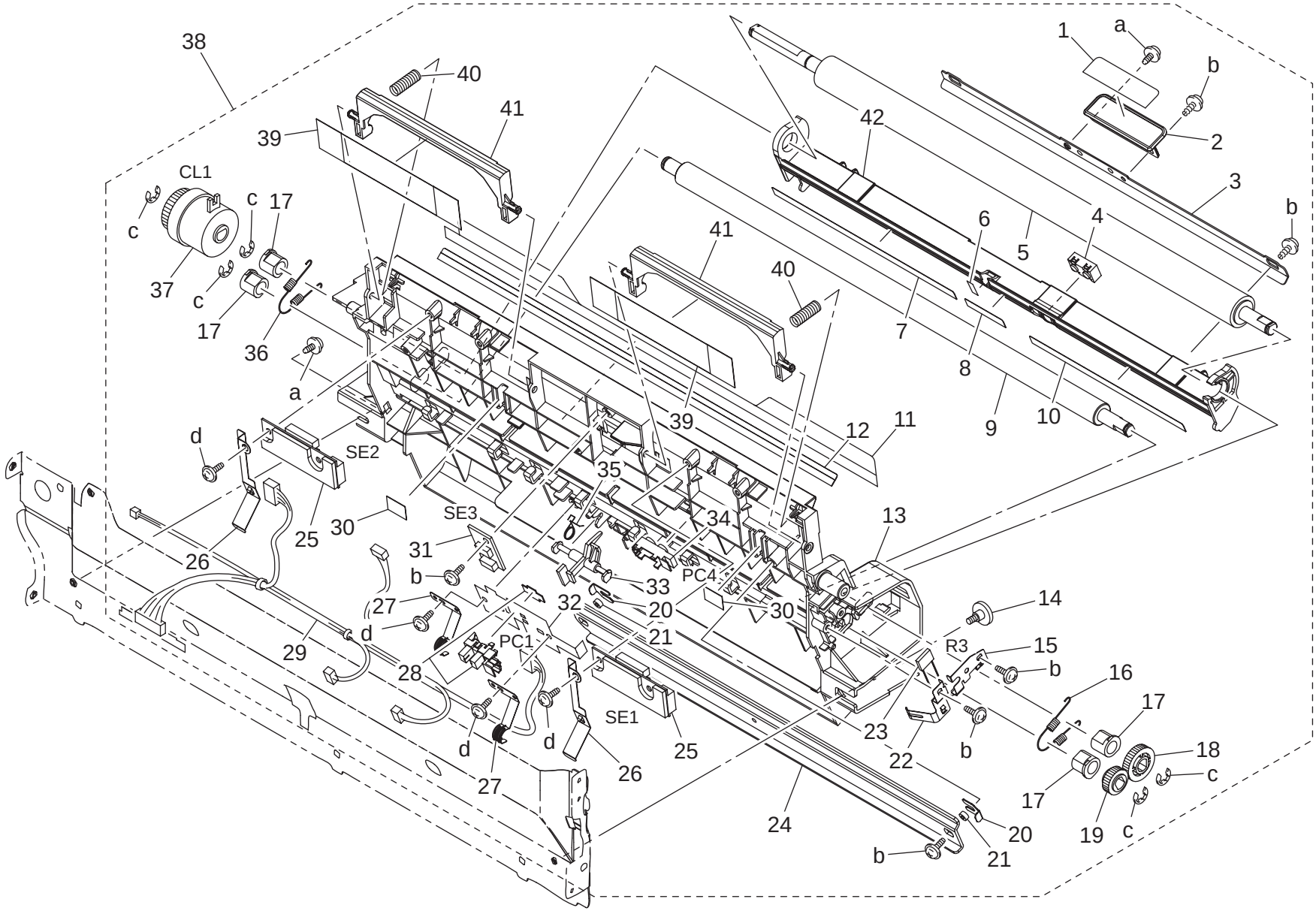

Key	Part No.	Description		Destinations	Class	QTY	Standard parts
1	4038 7303 01	LABEL M1	ラベル　Ｍ１		C	1	a-9735 0308 14 b-9739 0308 14 c-9721 0600 01 d-9739 0306 14
2	4038 3532 01	HANDLE	取手		C	1	
3	4038 3529 02	REINFORCE PLATE	補強板		D	1	
4	9335 1400 21	SOLID STATE SWITCH	透過型フォトスイッチ		C	1	
5	9J06 3501 01	ROLLER	ローラ		C	1	
6	4038 3539 01	GUIDE	ガイド		C	1	
7	4038 3537 01	GUIDE	ガイド		C	1	
8	4038 3538 01	GUIDE	ガイド		C	1	
9	4038 3502 02	ROLLER	ローラ		C	1	
10	4038 3536 01	GUIDE	ガイド		C	1	
11	9J06 3575 00	FILM	フィルム		C	1	
12	4038 3540 03	GUIDE	ガイド		C	1	
13	4038 3526 04	GUIDE	ガイド		C	1	
14	4038 3535 02	SHOULDER SCREW	段ねじ		C	1	
15	4038 3530 01	EARTH GROUND	アース		D	1	
16	4038 3525 01	TENSION SPRING	引張コイルばね		C	1	
17	4025 3572 01	BUSHING	軸受		C	4	
18	4004 3503 02	GEAR 20T	ギヤ　２０Ｔ		C	1	
19	4004 3504 02	GEAR 14T	ギヤ　１４Ｔ		C	1	
20	4038 3597 01	SPACER	スペーサ		C	2	
21	4038 3593 01	WASHER	ワッシャ		C	2	
22	4038 3567 01	PLATE SPRING	板ばね		D	1	
23	9455 8076 01	RESISTOR	その他固定抵抗器		D	1	
24	4038 3592 01	REINFORCE PLATE	補強板		D	1	
25	9372 1300 12	PHOTO SENSING ELEMENT	光電変換素子		B	2	
26	4038 3531 02	EARTH GROUND	アース		D	2	
27	9J06 7000 00	PLATE SPRING	板ばね		D	2	
28	4037 0906 01	PHOTO INTERRUPTER	フォトインタラプター		B	1	
29	4038 6830 02	WIRE HARNESS ASSY	ハーネス ＡＳＳＹ		D	1	
30	4128 3522 01	SEAL	シール		C	2	
31	9372 5400 31	HUMIDITY CONVERTION EL.	湿度変換素子		C	1	
32	4038 3561 03	BRACKET	取付板		D	1	
33	4038 3562 01	ACTUATOR	アクチュエータ		C	1	
34	9335 1400 11	PRISM	プリズム		C	1	
35	1164 3527 02	TORSION SPRING	ねじりコイルばね		C	1	
36	9J06 3576 00	TENSION SPRING	引張コイルばね		C	1	
37	9322 1300 21	CLUTCH	クラッチ		B	1	
38	9J06 R701 00	TRANSPORT UNIT	縦搬送ユニット		S	1	
39	4038 3556 01	SEAL	シール		C	2	
40	4038 3559 01	PRESSURE SPRING	圧縮コイルばね		C	2	
41	4038 3558 02	COVER	カバー		C	2	
42	4038 3527 03	GUIDE	ガイド		D	1	

RIGHT DOOR SECTION

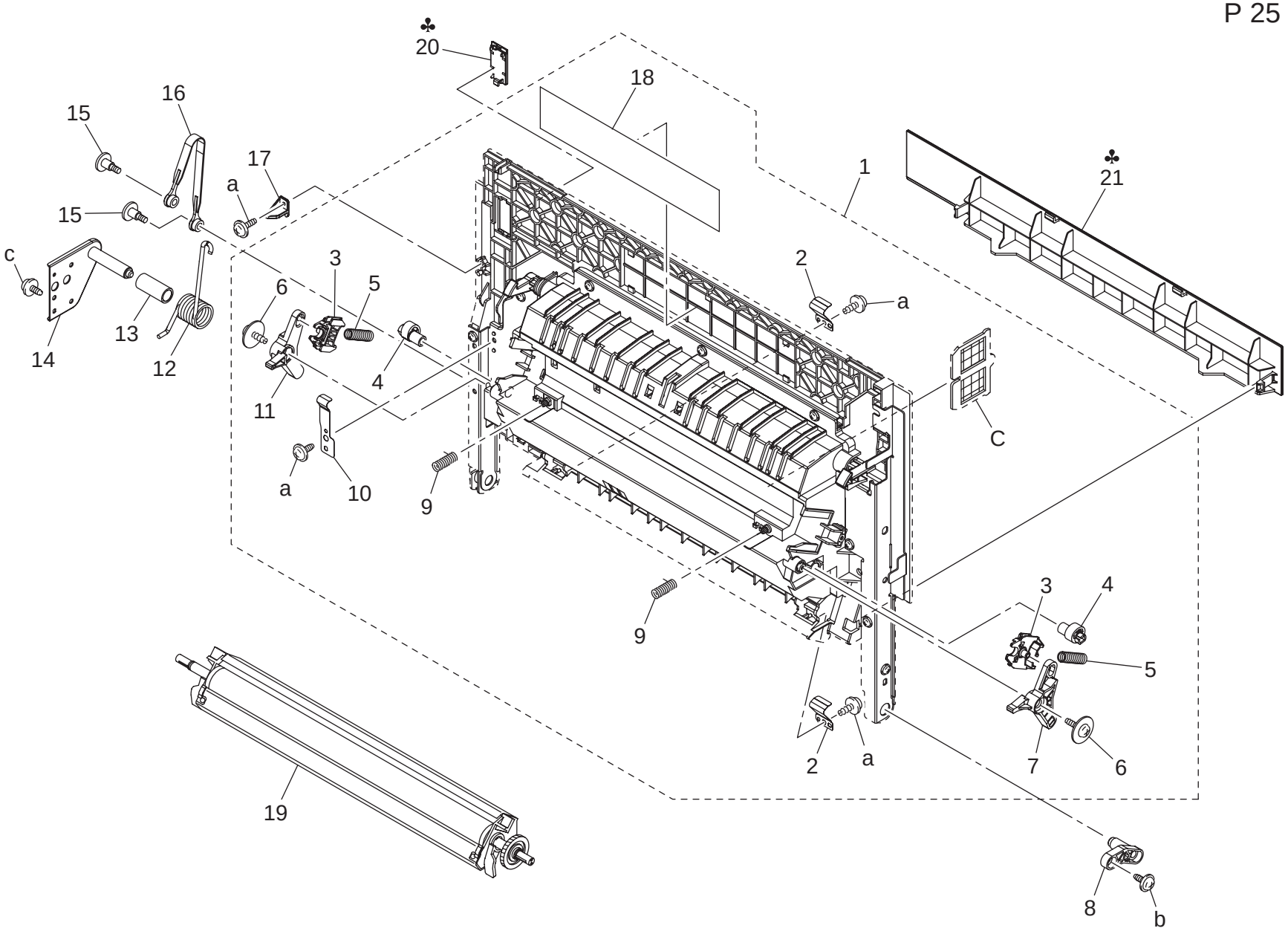

Key	Part No.	Description		Destinations	Class	QTY	Standard parts
1	9J06 R703 00	DOOR ASSY	縦搬送扉 Ａ Ｓ Ｓ Ｙ		C	1	a-9739 0308 14
2	4038 3520 01	PLATE SPRING	板ばね		D	2	b-9721 0400 01
3	4038 3542 02	HOLDER	ホルダ		D	2	c-9752 2010 50
4	4038 3553 01	CAM	カム		C	2	
5	4038 4611 01	PRESSURE SPRING	圧縮コイルばね		C	2	
6	4163 5293 01	SCREW	ねじ		C	2	
7	4038 3551 01	LEVER	レバー		C	1	
8	4038 3516 01	SHAFT	シャフト		D	1	
9	4038 4620 01	PRESSURE SPRING	圧縮コイルばね		C	2	
10	4038 3571 02	CONTACT	接点		D	1	
11	4038 3552 01	LEVER	レバー		C	1	
12	4038 3512 01	TORSION SPRING	ねじりコイルばね		C	1	
13	4038 3534 01	COLLAR	カラー		C	1	
14	4038 0210 01	BRACKET ASSY	取付板 ＡＳＳＹ		D	1	
15	4038 3511 02	SHOULDER SCREW	段ねじ		C	2	
16	4038 3523 01	STOPPER	ストッパ		C	1	
17	9J06 2583 02	GUIDE	ガイド（駆動解除）		C	1	
18	4038 7302 02	LABEL JAM	ラベル　ジャム処理		D	1	
19	9J06 R712 00	ROLLER ASSY	２次転写ローラー ＡＳＳＹ		C	1	
20	4038 3521 01	COVER	カバー	A1,D1,D3,F2,G1,H,I,J,K {bizhub C300}	C	1	
21	4038 3515 02	COVER	カバー	A1,D1,D3,F2,G1,H,I,J,K {bizhub C300}	C	1	

TRANSPORT DRIVE SECTION

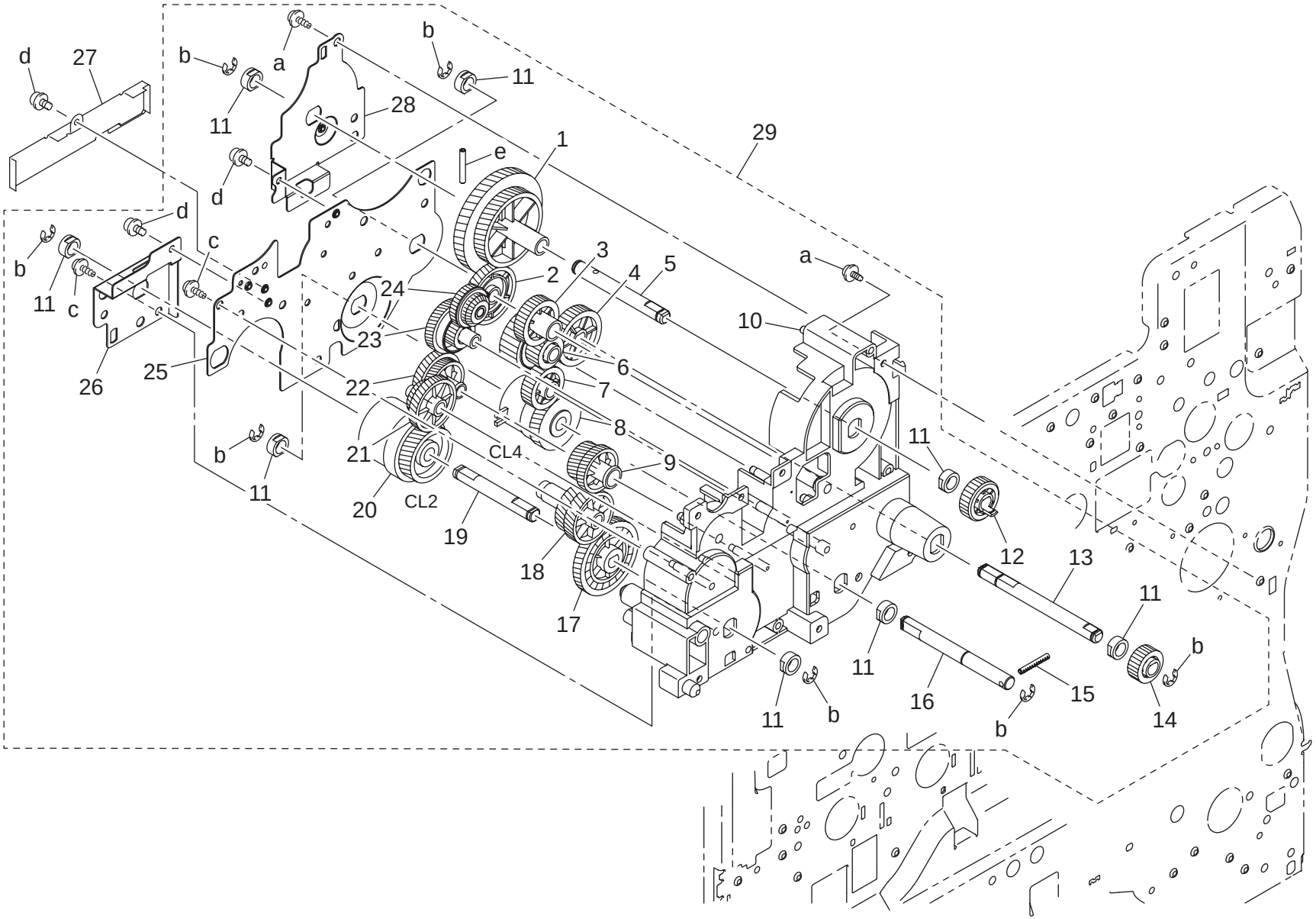

Key	Part No.	Description		Destinations	Class	QTY	Standard parts
1	4038 2513 01	GEAR 83/115T	ギヤ　８３／１１５ Ｔ		C	1	a-9735 0308 14
2	4038 2520 01	GEAR 65T	ギヤ　６５ Ｔ		C	1	b-9721 0500 01
3	4038 2529 01	GEAR 26T	ギヤ　２６ Ｔ		C	1	c-9739 0410 14
4	4038 2599 01	GEAR 32T	ギヤ　３２ Ｔ		C	1	d-9646 0306 14
5	4038 2524 01	SHAFT	シャフト		D	1	e-9754 3022 08
6	4038 2531 01	GEAR 32/18T	ギヤ　３２／１８ Ｔ		C	1	
7	4038 2532 01	GEAR 24T	ギヤ　２４ Ｔ		C	1	
8	9322 1400 21	CLUTCH	クラッチ		C	1	
9	4038 2551 01	GEAR 49/44T	ギヤ　４９／４４ Ｔ		C	1	
10	4038 2526 01	HOLDER	ホルダ		D	1	
11	4658 3516 01	BUSHING	軸受		C	8	
12	4038 2519 01	GEAR 22T	ギヤ　２２ Ｔ		C	1	
13	4038 2535 01	SHAFT	シャフト		D	1	
14	4038 2598 01	GEAR 18T	ギヤ　１８ Ｔ		C	1	
15	4038 2699 01	PIN	ピン		C	1	
16	4038 2515 01	SHAFT	シャフト		D	1	
17	4038 2514 01	GEAR 50T	ギヤ　５０ Ｔ		C	1	
18	4038 2549 01	GEAR 37/50T	ギヤ　３７／５０ Ｔ		C	1	
19	4038 2523 01	SHAFT	シャフト		D	1	
20	9322 1300 31	CLUTCH	クラッチ		C	1	
21	4038 2517 01	GEAR 22/38T	ギヤ　２２／３８ Ｔ		C	1	
22	4038 2508 01	GEAR 55/31T	ギヤ　５５／３１ Ｔ		C	1	
23	4038 2578 01	GEAR 20/56T	ギヤ　２０／５６ Ｔ		C	1	
24	4004 2545 01	GEAR 18/30T	ギヤ　１８／３０ Ｔ		C	1	
25	4038 2539 01	HOLD PLATE	保持板		D	1	
26	4038 2536 01	HOLD PLATE	保持板		D	1	
27	4038 2253 01	SHIELD	シールド		D	1	
28	4038 2597 01	HOLD PLATE	保持板		D	1	
29	9J06 R733 00	TRANSPORT DRIVE ASSY	搬送駆動 ＡＳＳＹ		C	1	

WASTE TONER TRANSPORT SECTION

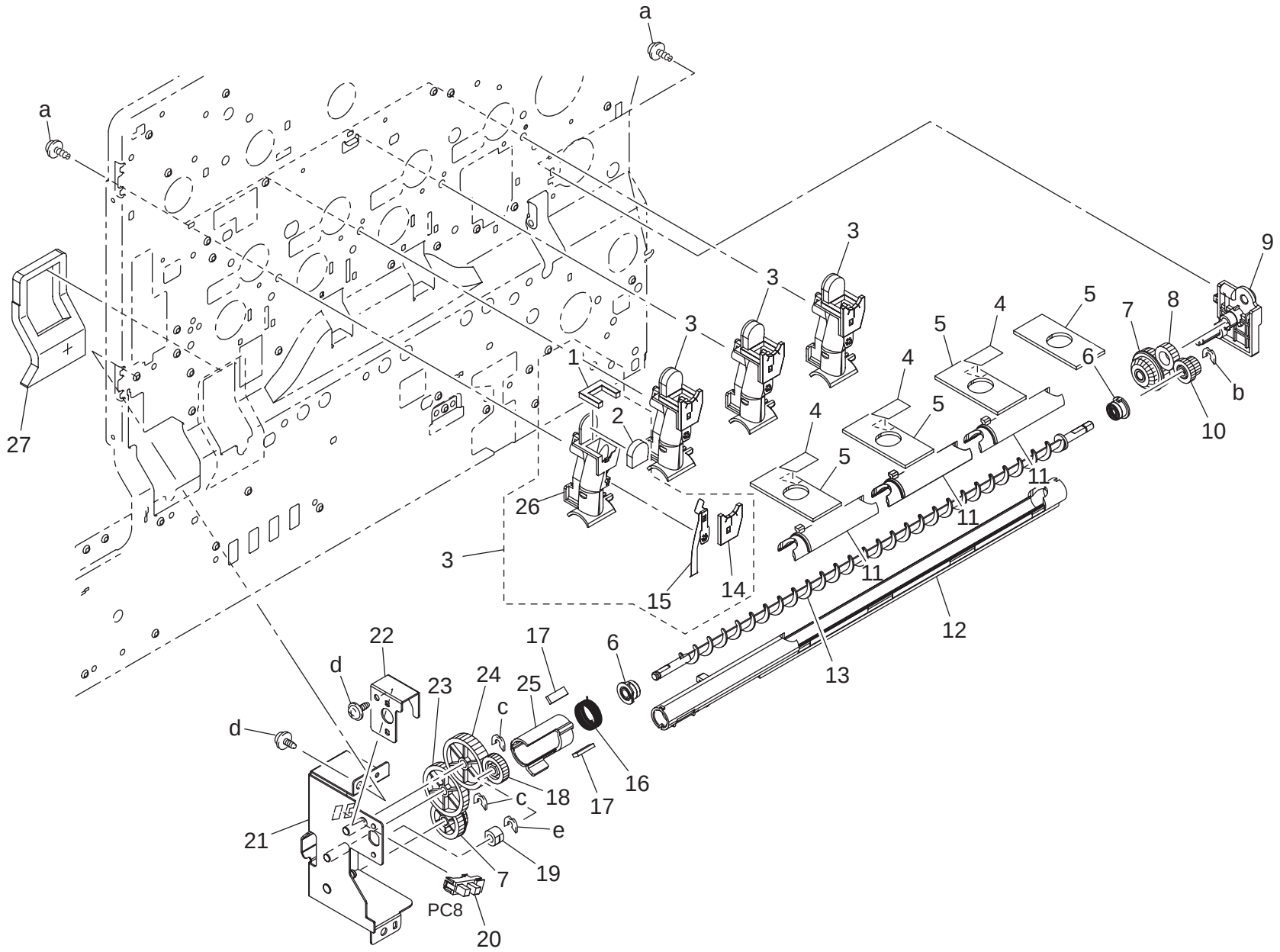

Key	Part No.	Description		Destinations	Class	QTY	Standard parts
1	4038 2118 01	SEAL	シール		C	4	a-9739 0308 14
2	4038 2076 01	SEAL	シール		C	4	b-4425 3001 01
3	4038 R745 00	PIPE ASSY	パイプ ＡＳＳＹ		C	4	c-4425 3002 01
4	4038 1272 00	SEAL	シール		C	3	d-9735 0306 14
5	4038 2119 01	SEAL	シール		C	4	e-9721 0300 01
6	4004 5607 02	BUSHING	軸受		C	2	
7	4004 2545 01	GEAR 18/30T	ギヤ　１８／３０ Ｔ		C	2	
8	4038 2579 01	GEAR 18T	ギヤ１８ Ｔ		C	1	
9	4038 2586 01	HOLDER	ホルダ		D	1	
10	4004 5612 01	GEAR 18T	ギヤ　１８ Ｔ		C	1	
11	4038 2115 02	LID	蓋		D	3	
12	4038 2111 02	PIPE	パイプ		D	1	
13	4038 2112 04	SCREW	搬送羽根		D	1	
14	4038 2117 02	SEAL	シール		C	4	
15	4038 2131 07	STIRRING PLATE	撹拌板		D	4	
16	4038 2114 01	TORSION SPRING	ねじりコイルばね		C	1	
17	4038 2143 01	SEAL	シール		C	2	
18	4038 2142 01	GEAR 16T	ギヤ　１６ Ｔ		C	1	
19	4038 2120 02	BUSHING	軸受		C	1	
20	9335 1300 61	PHOTO INTERRUPTER	フォトインタラプタ		B	1	
21	4038 0203 02	BRACKET ASSY	取付板 ＡＳＳＹ		D	1	
22	4038 2089 01	STOP PLATE	固定板		D	1	
23	4038 2140 01	GEAR 32/30T	ギヤ　３２／３０ Ｔ		C	1	
24	4038 2130 01	GEAR 32T	ギヤ　３２ Ｔ		C	1	
25	4038 2113 02	SHUTTER	シャッタ		D	1	
26	4038 2116 04	PIPE	パイプ（廃トナー後）		D	4	
27	4038 2062 01	SEAL	シール		C	1	

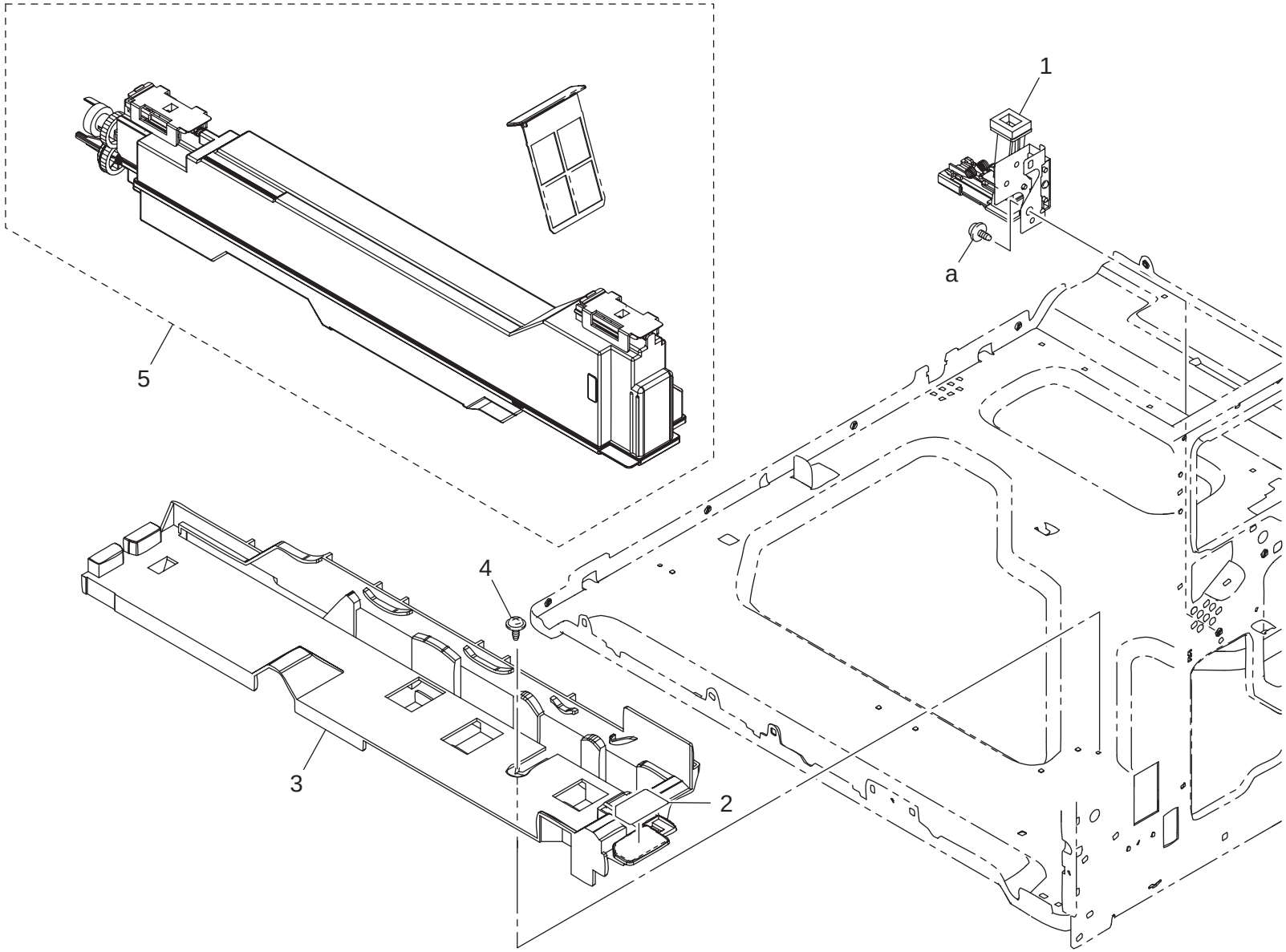
1
a
5
4
3
2

Key	Part No.	Description		Destinations	Class	QTY	Standard parts
1	9J06 R713 00	TONER PIPE	廃トナーパイプ（前）		C	1	a-9735 0306 14
2	4038 7311 02	LABEL	ラベル		D	1	
3	4038 2013 04	RAIL	レール		D	1	
4	4154 3804 01	SCREW	ねじ		C	1	
5	4065 611	WASTE TONER BOX	廃棄トナーボックス		A	1	

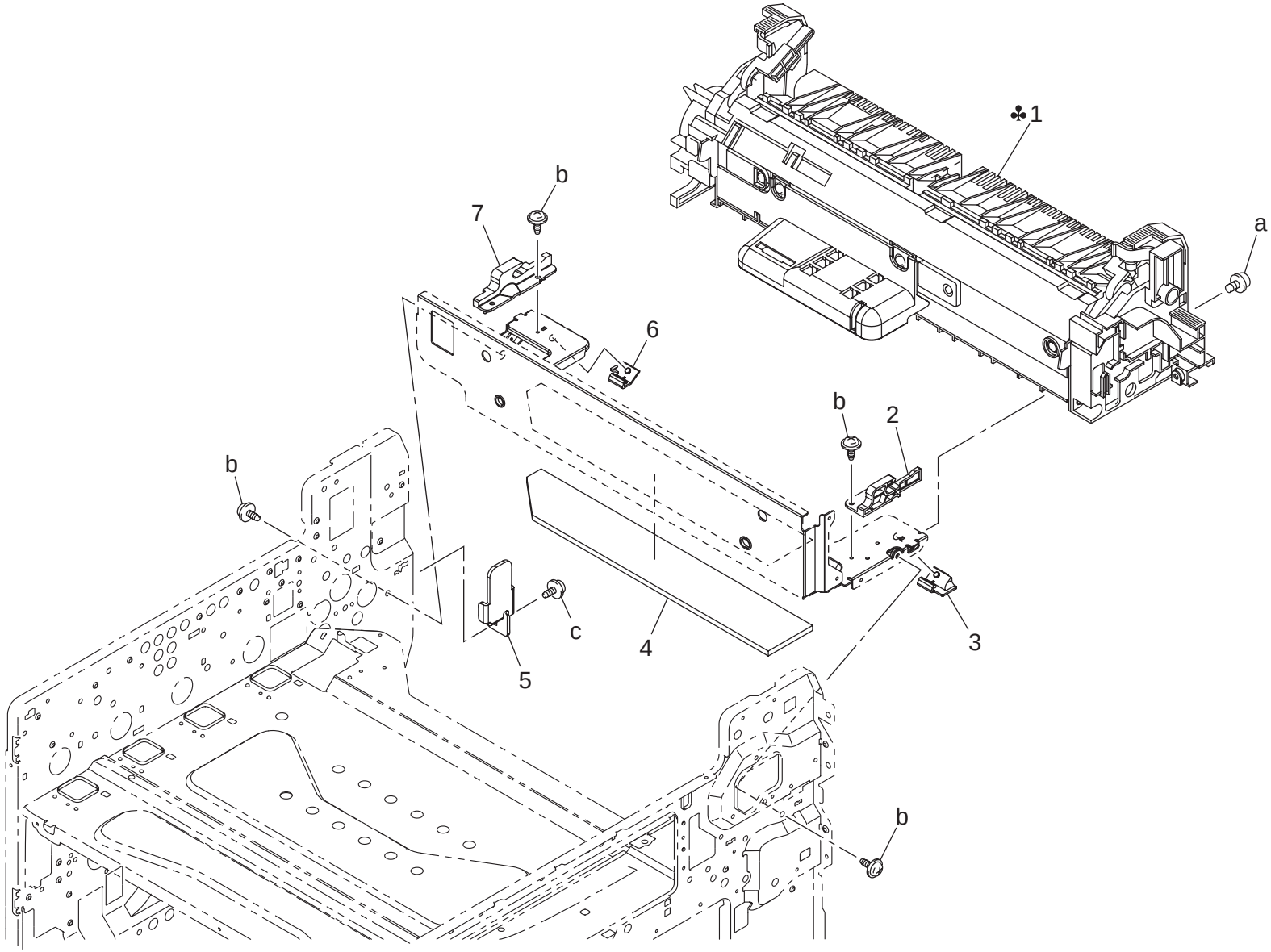
✤1
a
b
7
6
b
2
b
c
5
4
3
b

Key	Part No.	Description		Destinations	Class	QTY	Standard parts
1	9J06 R705 00	FUSING UNIT 100V	定着ユニット　１００Ｖ	A1	A	1	a-9646 0408 14
1	9J06 R706 00	FUSING UNIT 120V	定着ユニット　１２０Ｖ	B,G2	A	1	b-9735 0308 14
1	9J06 R706 00	FUSING UNIT 120V	定着ユニット　１２０Ｖ	F1{bizhub C352}	A	1	c-9735 0306 14
1	9J06 R707 00	FUSING UNIT 230V	定着ユニット　２３０Ｖ	C,D1,D3,F2,G1,I,K,J	A	1	
1	9J06 R734 00	FUSING UNIT 110V	定着ユニット　１１０Ｖ	H	A	1	
2	9J06 2462 01	GUIDE	ガイド		C	1	
3	9J06 2079 01	HOLDER	ホルダ		C	1	
4	9J06 1030 00	THERMAL INSULATOR	断熱材（定着下）		C	1	
5	4038 3735 01	BRACKET	取付板		D	1	
6	9J06 2082 01	HOLDER	ホルダ		C	1	
7	9J06 2463 01	GUIDE	ガイド		C	1	

b

Key	Part No.	Description		Destinations	Class	QTY	Standard parts
1	9J06 2556 01	BRACKET	取付板		D	1	a-9721 0600 01
2	9J06 2570 01	GEAR 28/82T	ギヤ　２８／８２ Ｔ		C	1	b-9752 3012 50
3	9J06 2566 01	GEAR 18T	ギヤ　１８ Ｔ		C	1	c-1144 5200 01
4	9J06 2585 01	PRESSURE SPRING	圧縮コイルばね		C	1	d-9721 0400 01
5	9J06 2582 01	HOLDER	ホルダ		D	1	e-9646 0306 14
6	9J06 2584 01	LEVER	レバー		C	1	f-9735 0308 14
7	9J06 2581 01	SHAFT	シャフト		D	1	g-9644 2605 14
8	9J06 2571 01	GEAR 28T	ギヤ　２８ Ｔ		C	1	h-9646 0306 14
9	9J06 2573 01	SHAFT	シャフト		D	1	k-9739 0308 14
10	4658 3516 01	BUSHING	軸受		C	10	
11	4154 3804 01	SCREW	ねじ		C	4	
12	9J06 2557 01	HOLDER	ホルダ		D	1	
13	9J06 2541 01	GEAR 20T	ギヤ　２０ Ｔ		C	1	
14	9J06 2574 01	GEAR 16T	ギヤ　１６ Ｔ		C	1	
15	9J06 2559 01	SHAFT	シャフト		D	1	
16	1200 3120 02	BUSHING	シ゛クウケ		C	2	
17	9J06 2595 02	PRESSURE SPRING	圧縮コイルばね		C	1	
18	9J06 2546 01	GEAR 13T	ギヤ　１３ Ｔ		C	1	
19	4038 2580 01	GEAR 16T	ギヤ　１６ Ｔ		C	1	
20	9J06 2576 03	BRACKET	取付板（一次離間）		D	1	
21	9J06 2575 01	GEAR 22T	ギヤ　２２ Ｔ		C	1	
22	9J06 2594 01	SHAFT	シャフト		D	1	
23	9J06 2587 01	SHAFT	シャフト		D	1	
24	9J06 0207 01	BRACKET ASSY	取付板 ＡＳＳＹ		D	1	
25	9J06 2542 01	GEAR 18/75T	ギヤ　１８／７５ Ｔ		C	1	
26	9J06 2564 01	SHAFT	シャフト		D	1	
27	9J06 2543 01	GEAR 60T	ギヤ　６０ Ｔ		C	1	
28	9J06 2544 01	DETECTING PLATE	検出板		C	1	
29	4037 0906 01	PHOTO INTERRUPTER	フォトインタラプター		B	1	
30	9J06 R726 00	MOTOR ASSY	定着圧接離間モーター		C	1	
31	9322 1300 21	CLUTCH	クラッチ		B	1	
32	9J06 2596 01	SHAFT	シャフト		D	1	
33	4038 2592 01	GEAR 18T	ギヤ　１８ Ｔ		C	1	
34	9J06 2547 01	GEAR 35T	ギヤ　３５ Ｔ		C	1	
35	4038 2591 01	GEAR 18T	ギヤ　１８ Ｔ		C	1	
36	4038 2593 02	GEAR 41T	ギヤ　４１ Ｔ		C	1	
37	9383 2210 11	CONNECTOR 2P	コネクター		D	1	
38	9J06 2545 01	GEAR 40T	ギヤ　４０ Ｔ		C	1	
39	9J06 2563 02	SHAFT	シャフト（定着離間）		D	1	
40	9314 2400 41	MOTOR	ブラシレスモータ		B	1	
41	9J06 2548 00	PLATE	受け板（定着圧接離間）		C	1	

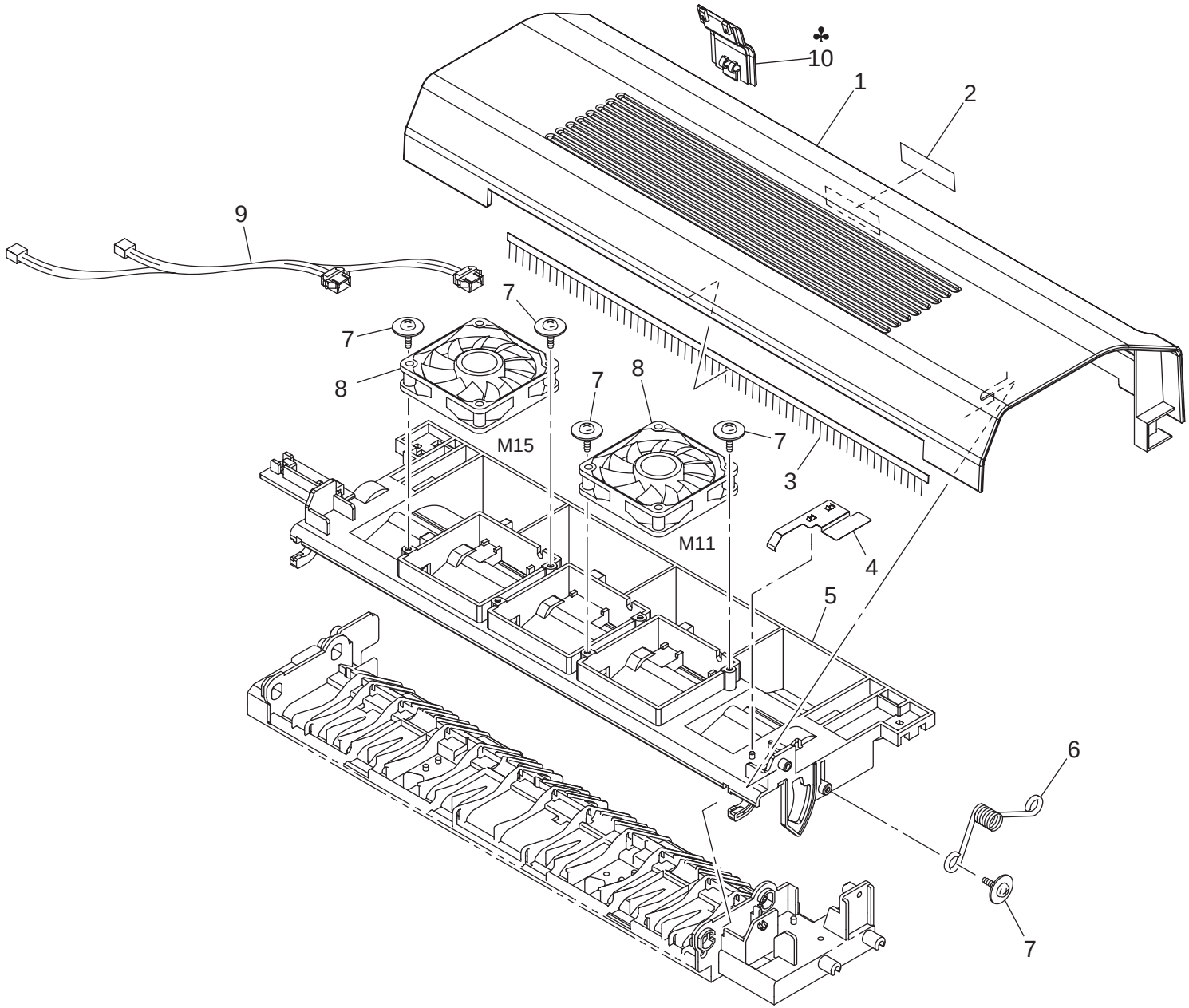
10
1
2
9
7
7
8
8
7
7
M15
M11
3
4
5
6
7

Key	Part No.	Description		Destinations	Class	QTY	Standard parts
1	4038 5881 05	COVER	カバー		C	1	
2	4038 7304 01	LABEL EXIT COVER	ラベル　排紙カバー		C	1	
3	9J06 5944 01	NEUTRALIZING BRUSH	除電ブラシ		C	1	
4	4038 5886 03	EARTH GROUND	アース		D	1	
5	4038 5883 03	GUIDE	ガイド		C	1	
6	4038 5896 02	TORSION SPRING	ねじりコイルばね		C	1	
7	4163 5293 01	SCREW	ねじ		C	5	
8	9313 1300 41	FAN MOTOR	ファンモータ		C	2	
9	9J06 6812 02	WIRE HARNESS ASSY	ハーネス ＡＳＳＹ		D	1	
10	4038 5852 02	COVER	カバー	A1,D1,D3,F2,G1,H,I,J,K {bizhub C300}	C	1	

PAPER EXIT DRIVE SECTION

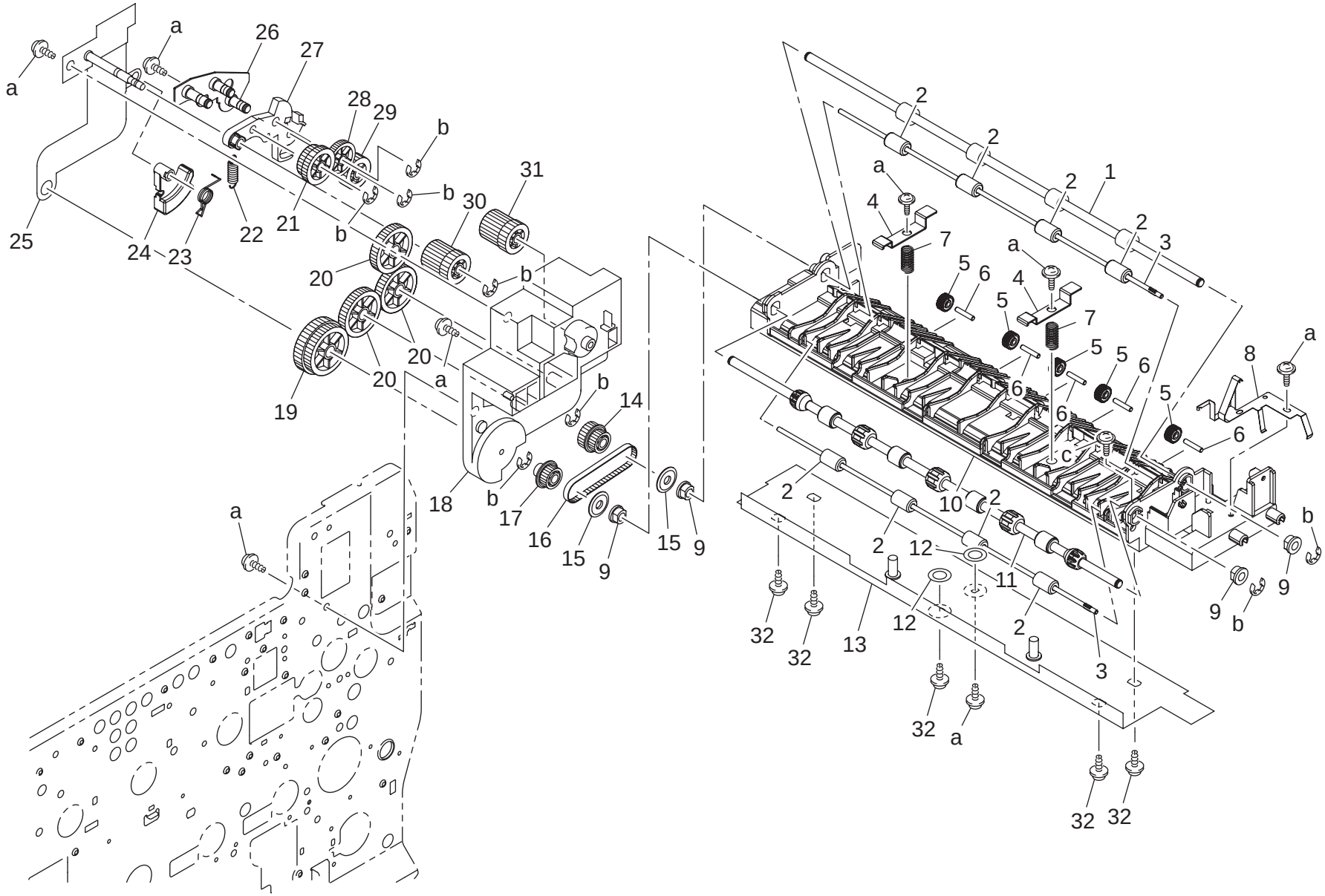

Key	Part No.	Description		Destinations	Class	QTY	Standard parts
1	4038 5887 01	ROLLER	ローラ		C	1	a-9739 0308 14
2	4038 5915 01	ROLL	ころ		C	8	b-9721 0400 01
3	4025 5984 01	SHAFT	シャフト		D	2	c-9739 0306 14
4	9J06 5945 01	LIFTING PLATE	押上板		D	2	
5	9J06 5930 01	COLLAR	カラー		C	5	
6	4036 2549 01	PIN	ピン		D	5	
7	9J06 5946 02	PRESSURE SPRING	圧縮コイルばね		C	2	
8	9J06 5948 01	EARTH GROUND	アース		D	1	
9	4038 5860 01	BUSHING	軸受		C	4	
10	9J06 5904 04	GUIDE	ガイド（下）		C	1	
11	4038 5901 01	ROLLER	ローラ		C	1	
12	4036 3672 01	SPACER	スペーサ		C	2	
13	9J06 0214 03	BRACKET ASSY	取付板 ＡＳＳＹ（排紙）		D	1	
14	4038 5897 01	PULLEY 24/16T	プーリ　２４／１６ Ｔ		C	1	
15	1200 1646 03	WASHER	ワッシャー		D	2	
16	4038 5893 01	TIMING BELT 144L	タイミングベルト　１４４ Ｌ		C	1	
17	4038 5898 01	PULLEY 24T	プーリ　２４ Ｔ		C	1	
18	9J06 5916 03	HOLDER	ホルダ（排紙駆動）		D	1	
19	9J06 5928 01	GEAR 31/33T	ギヤ　３１／３３ Ｔ		C	1	
20	9J06 5927 01	GEAR 28T	ギヤ　２８ Ｔ		C	3	
21	4038 5877 02	GEAR 24/20T	ギヤ　２４／２０ Ｔ		C	1	
22	4038 5862 01	TENSION SPRING	引張コイルばね		C	1	
23	4038 5864 01	TORSION SPRING	ねじりコイルばね		C	1	
24	4038 5863 01	LEVER	レバー		C	1	
25	9J06 0212 01	DRIVING ASSY	駆動 ＡＳＳＹ		D	1	
26	9J06 0213 02	LEVER ASSY	レバー ＡＳＳＹ（排紙駆動）		D	1	
27	9J06 5911 02	LEVER	レバー（駆動ドッキング）		C	1	
28	9J06 5925 02	GEAR 32T	ギア　３２ Ｔ		C	1	
29	4038 5872 02	GEAR 18T	ギヤ　１８ Ｔ		C	1	
30	4038 5871 02	GEAR 17/16T	ギヤ　１７／１６ Ｔ		C	1	
31	9J06 5926 01	GEAR 19/20T	ギヤ　１９／２０ Ｔ		C	1	
32	4163 5293 01	SCREW	ねじ		C	5	

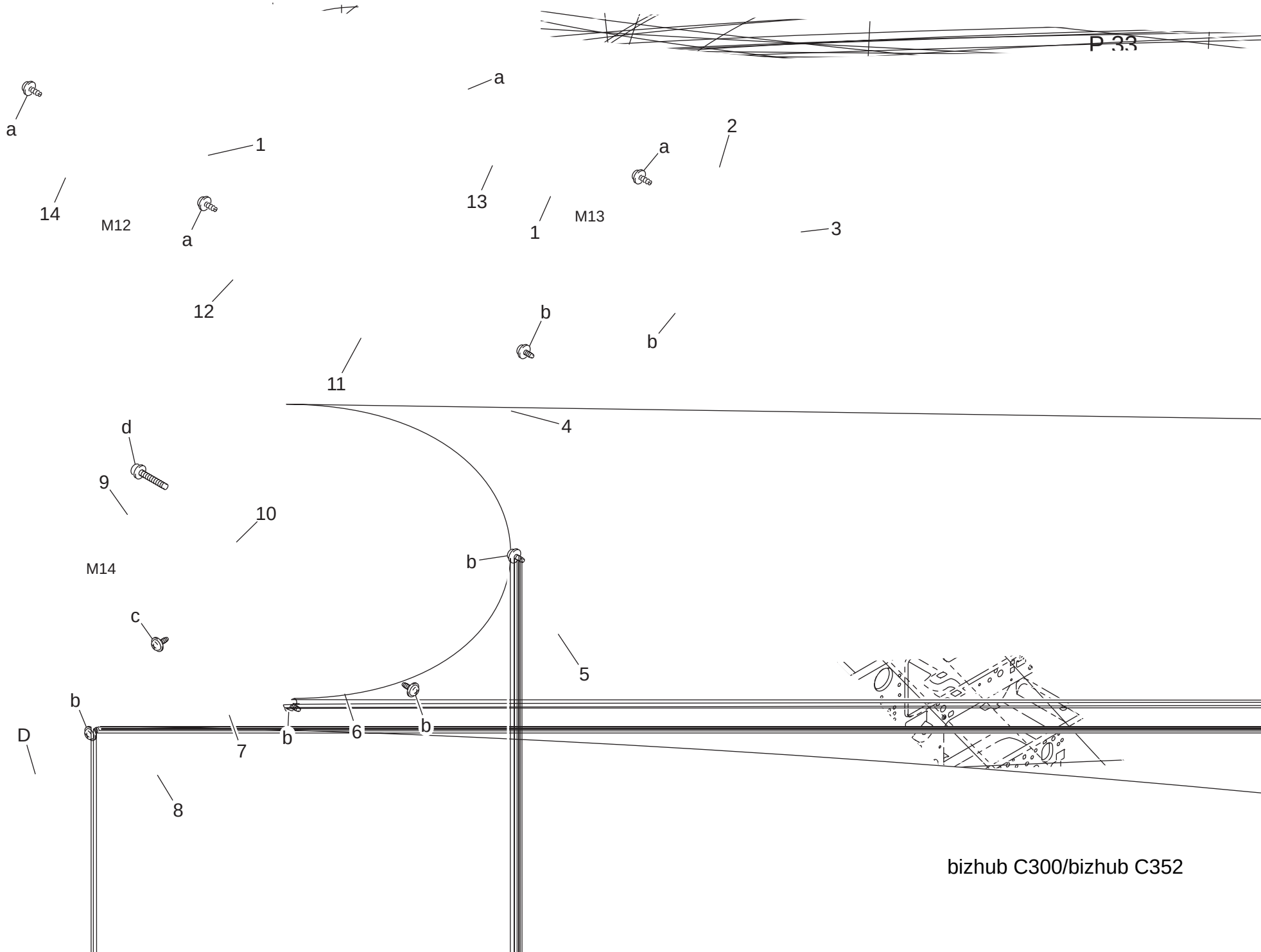
a
a
1
2
a
14
M12
a
13
1
M13
3
12
b
b
11
4
d
9
10
M14
b
c
5
b
D
7
b
6
b
8

Key	Part No.	Description		Destinations	Class	QTY	Standard parts
1	9313 1000 72	FAN MOTOR	ファンモータ		C	2	a-9739 0308 14
2	9J06 2465 01	DUCT	ダクト		D	1	b-9735 0308 14
3	4038 2033 01	DUCT	ダクト		D	1	c-9735 0306 14
4	4038 2411 02	DUCT	ダクト		D	1	d-9646 0440 14
5	4038 2055 02	DUCT	ダクト		D	1	
6	4038 2241 02	BRACKET	取付板		D	1	
7	4038 2237 01	BRACKET	取付板		D	1	
8	4038 1018 02	LEFT COVER	左カバー		C	1	
9	9313 1000 72	FAN MOTOR	ファンモータ		C	1	
10	4004 2148 01	SEAL	シール		C	1	
11	4038 2412 02	DUCT	ダクト		D	1	
12	9J06 2468 02	DUCT	ダクト（機内冷却・後）		D	1	
13	9J06 2454 01	BRACKET	取付板		D	1	
14	9J06 2469 01	BRACKET	取付板		D	1	

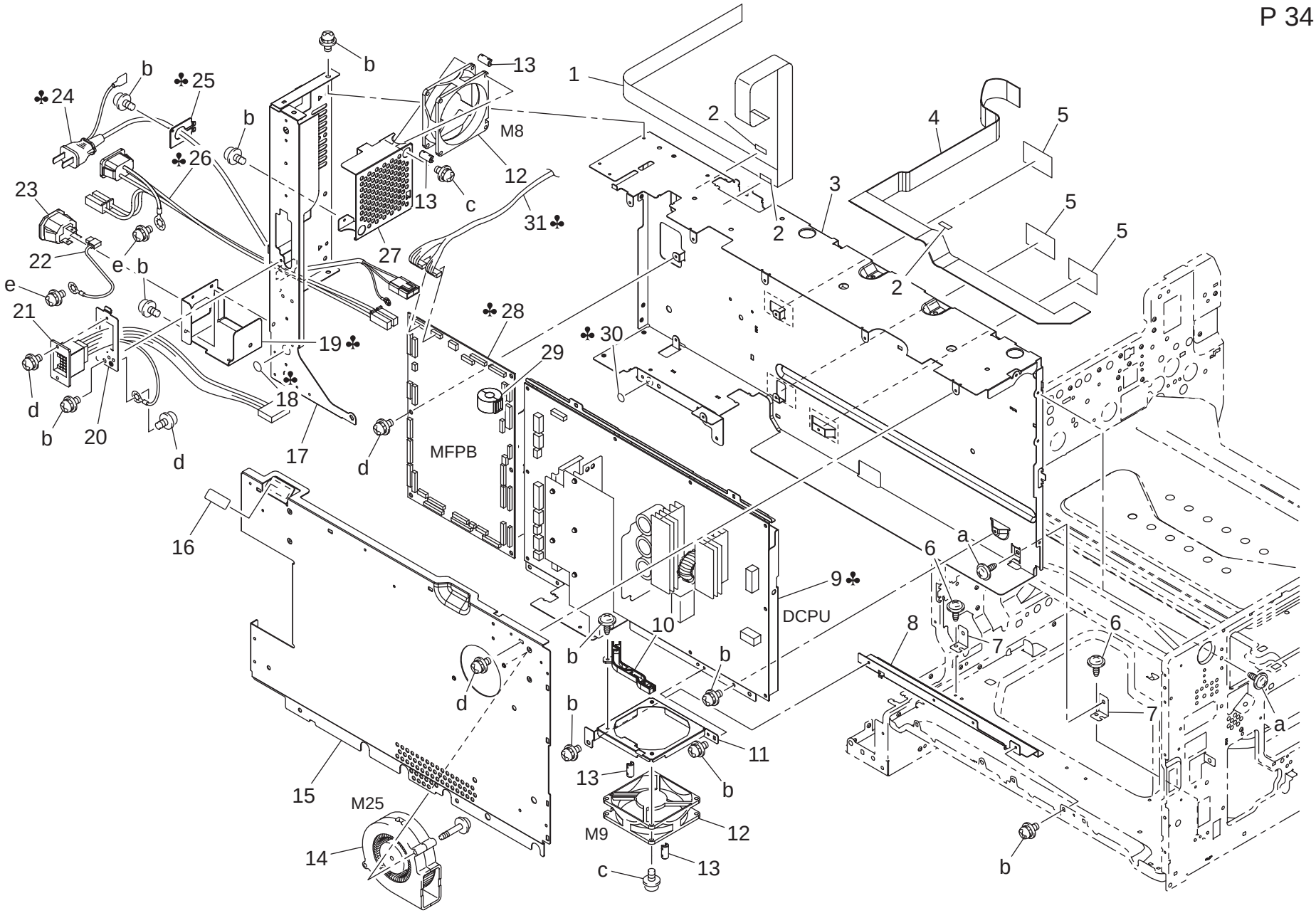
1
2
3
4
5
6
7
8
9 ♣
10
11
12
13
14
15
16
17
18 ♣
19 ♣
20
21
22
23
24 ♣
25 ♣
26 ♣
27
28 ♣
29
30 ♣
31 ♣
a
b
c
d
e
M8
M9
M25
MFPB
DCPU

Key	Part No.	Description		Destinations	Class	QTY	Standard parts
1	4038 6848 01	WIRE HARNESS ASSY	ハーネス ＡＳＳＹ		C	1	a-9735 0306 14
2	4109 5530 01	STOPPER	ストッパ		C	3	b-9646 0306 14
3	4038 2401 08	FRAME	フレーム		D	1	c-9646 0330 14
4	4038 6847 01	WIRE HARNESS ASSY	ハーネス ＡＳＳＹ		C	1	d-9646 0308 14
5	4038 2178 01	SEAL	シール		C	3	e-9646 0408 14
6	4154 3804 01	SCREW	ねじ		C	2	
7	4038 2071 02	BRACKET	取付板		D	2	
8	4038 2307 02	GUIDE	ガイド		D	1	
9	9J06 6201 01	DCPU	ＤＣＰＵ	A1,B,G2,H	I	1	
9	9J06 6201 01	DCPU	ＤＣＰＵ	F1{bizhub C352}	I	1	
9	9J06 6202 01	DCPU	ＤＣＰＵ	C,D1,D3,F2,G1,I,K,J	I	1	
10	9J06 2470 01	HOLDER	ホルダ		D	1	
11	4038 2308 02	BRACKET	取付板		D	1	
12	9313 1500 12	FAN MOTOR	ファンモータ		C	2	
13	4038 2309 01	COLLAR	カラー		C	4	
14	9313 1000 72	FAN MOTOR	ファンモータ		C	1	
15	9J06 2304 01	COVER	カバー		D	1	
16	4038 1050 01	SEAL	シール		C	1	
17	4038 2402 05	BRACKET	取付板		D	1	
18	9J06 7302 01	LABEL	ラベル	A1	D	1	
19	4038 2314 03	BRACKET	取付板		D	1	
20	9J06 2403 01	COVER	カバー		D	1	
21	9J06 6814 01	WIRE HARNESS ASSY	ハーネス ＡＳＳＹ		D	1	
22	4025 6805 01	WIRE HARNESS ASSY	ハーネス ＡＳＳＹ		D	1	
23	9383 5000 11	JACK	ジャック		D	1	
24	4037 0775 01	POWER CORD	電源コード	A1	D	1	
25	4037 2239 02	BRACKET	取付板	A1	D	1	
26	4038 6817 03	WIRE HARNESS ASSY	ハーネス ＡＳＳＹ	A1	D	1	
26	9J06 6806 01	WIRE HARNESS ASSY	ハーネス ＡＳＳＹ	B,C,D1,D3,F2,G1,G2,H,I ,J,K	D	1	
26	9J06 6806 01	WIRE HARNESS ASSY	ハーネス ＡＳＳＹ	F1{bizhub C352}	D	1	
27	4038 2406 02	BRACKET	取付板		D	1	
28	9J06 0101 02	MFPB	ＭＦＰＢ	{bizhub C352}	I	1	
28	9J06 H003 01	MFPB	ＭＦＰＢ	{bizhub C300}	I	1	
29	9326 1410 31	FERRITE CORE	フェライトコア		D	1	
30	9J06 7301 01	LABEL	ラベル	A1	D	1	
31	9J06 6808 02	WIRE HARNESS ASSY	ハーネス ＡＳＳＹ	A1,B,G2,H{bizhub C300}	D	1	
31	9J06 6808 02	WIRE HARNESS ASSY	ハーネス ＡＳＳＹ	F1{bizhub C352}	D	1	
31	9J06 6818 03	WIRE HARNESS ASSY	ハーネス ＡＳＳＹ	C,D1,D3,F2,G1,I,K,J	D	1	

ELECTRICAL COMPONENTS

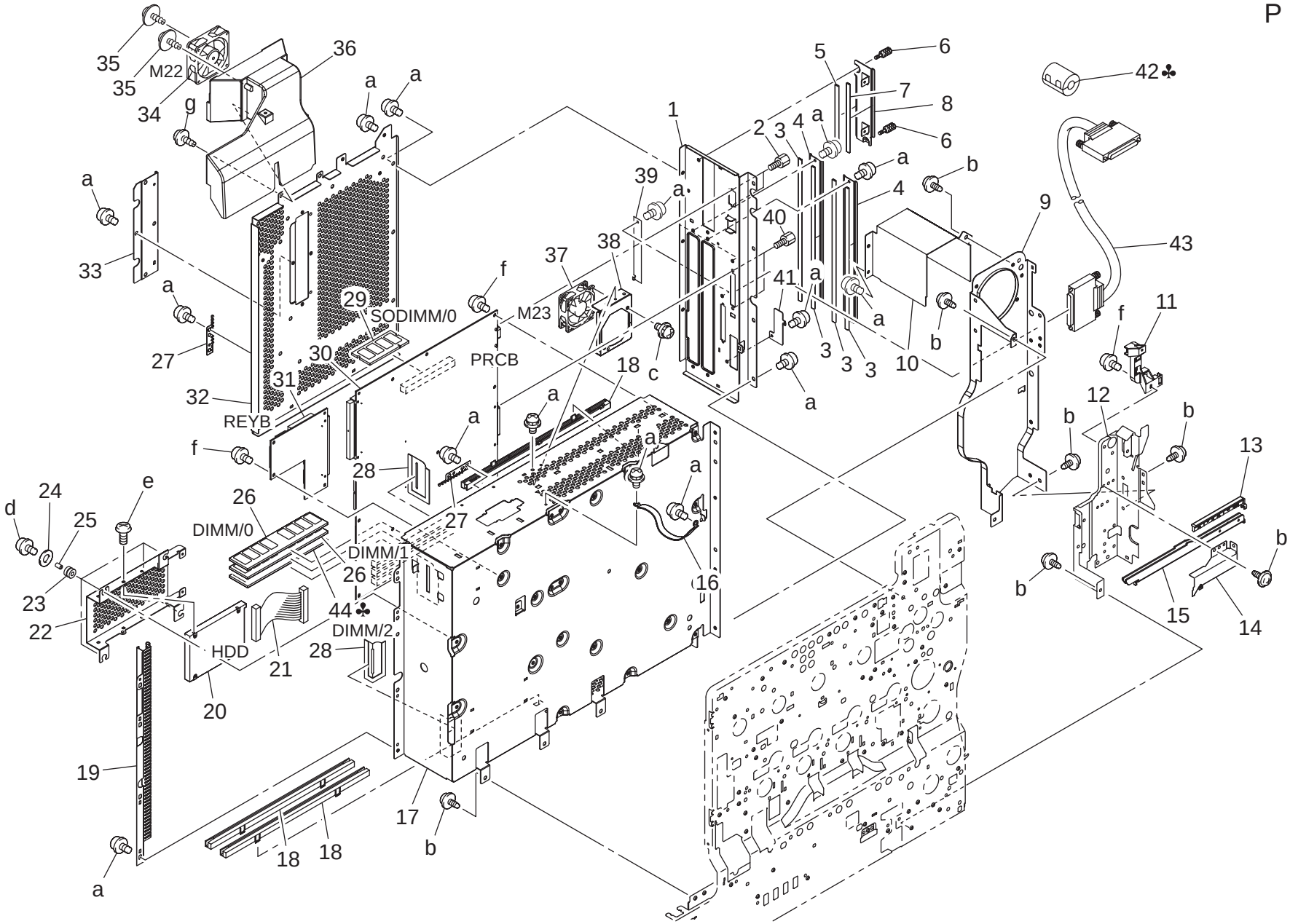

Key	Part No.	Description		Destinations	Class	QTY	Standard parts
1	9J06 2303 02	BRACKET	取付板（右）		D	1	a-9646 0306 14
2	4025 2283 01	SCREW	ねじ		D	2	b-9735 0308 14
3	4037 6776 01	ELECTRICALLY CONDUCTIVE MATERIAL	導電材料		D	4	c-9646 0314 14
4	4037 2247 01	COVER	カバー		D	2	d-9646 0314 14
5	4037 6778 02	ELECTRICALLY CONDUCTIVE MATERIAL	導電材料		D	1	e-9654 0304 14
6	4037 2220 02	SHOULDER SCREW	段ねじ		C	2	f-9646 0308 14
7	4037 6777 01	ELECTRICALLY CONDUCTIVE MATERIAL	導電材料		D	1	g-9739 0308 14
8	4037 2219 02	BRACKET	取付板		D	1	
9	4038 1502 03	HOLD PLATE	保持板		D	1	
10	4038 2405 01	DUCT	ダクト		D	1	
11	9J06 2572 01	HOLDER	ホルダ		D	1	
12	4038 2074 05	REINFORCE PLATE	補強板		D	1	
13	4038 2036 01	CAP	キャップ		C	1	
14	4038 2075 02	REINFORCE PLATE	補強板		D	1	
15	4038 2073 01	REINFORCE PLATE	補強板		D	1	
16	4037 6812 01	WIRE HARNESS ASSY	ハーネス ＡＳＳＹ		D	1	
17	9J06 2301 01	SHIELD BOX	シールドボックス		D	1	
18	4004 2203 01	GUIDE	ガイド		D	3	
19	9J06 2317 01	PLATE SPRING	板ばね		D	1	
20	9J06 M700 00	HDD	ＨＤＤ	A1,B,C,G2	I	1	
21	4036 6870 01	WIRE HARNESS ASSY	ハーネス ＡＳＳＹ	A1,B,C,G2	D	1	
22	4038 2312 01	BRACKET	取付板	A1,B,C,G2	D	1	
23	4025 2294 01	BUSHING	ブッシュ	A1,B,C,G2	C	4	
24	1200 1442 04	WASHER	ワッシャー	A1,B,C,G2	D	4	
25	4025 2295 01	COLLAR	カラー	A1,B,C,G2	C	4	
26	4037 6076 01	DIMM	ＤＩＭＭ		C	2	
27	4038 1510 01	PLATE SPRING	板ばね		D	2	
28	9J06 2318 01	COVER	カバー		C	2	
29	9J06 M701 00	SODIMM	ＳＯＤＩＭＭ		C	1	
30	9J06 0121 06	PRBC	ＰＲＢＣ		I	1	
31	4038 0123 03	REYB	ＲＥＹＢ		I	1	
32	4038 2302 01	LID	蓋		D	1	
33	4037 2244 01	COVER	カバー		D	1	
34	4040 M100 00	FAN MOTOR	ファンモータ		C	1	
35	4163 5293 01	SCREW	ねじ		C	2	
36	9J06 2410 02	DUCT	ダクト（コント基板冷却）		D	1	
37	9313 1400 31	FAN MOTOR	ファンモータ		C	1	
38	9J06 2320 01	BRACKET	取付板		D	1	
39	4037 2240 01	COVER	カバー		D	1	
40	4581 2269 04	SHOULDER SCREW	段ねじ		C	2	
41	4037 2242 01	COVER	カバー		D	1	
42	0866 7801 01	FERRITE CORE	フェライトコア	F1{bizhub C352}	D	1	
42	0866 7801 01	FERRITE CORE	フェライトコア	C,D1,D3,F2,G1,H,I,J,K	D	1	
43	9J06 N101 00	WIRE HARNESS ASSY	ハーネス ＡＳＳＹ		D	1	
44	4037 6086 01	DIMM	ＤＩＭＭ	A1	C	1	
44	4037 6086 01	DIMM	ＤＩＭＭ	B,C,D1,D3,F1,F2,G1,G2, H,I,J,K{bizhub C352}	C	1	

MPT CASSETTE TRAY SECTION

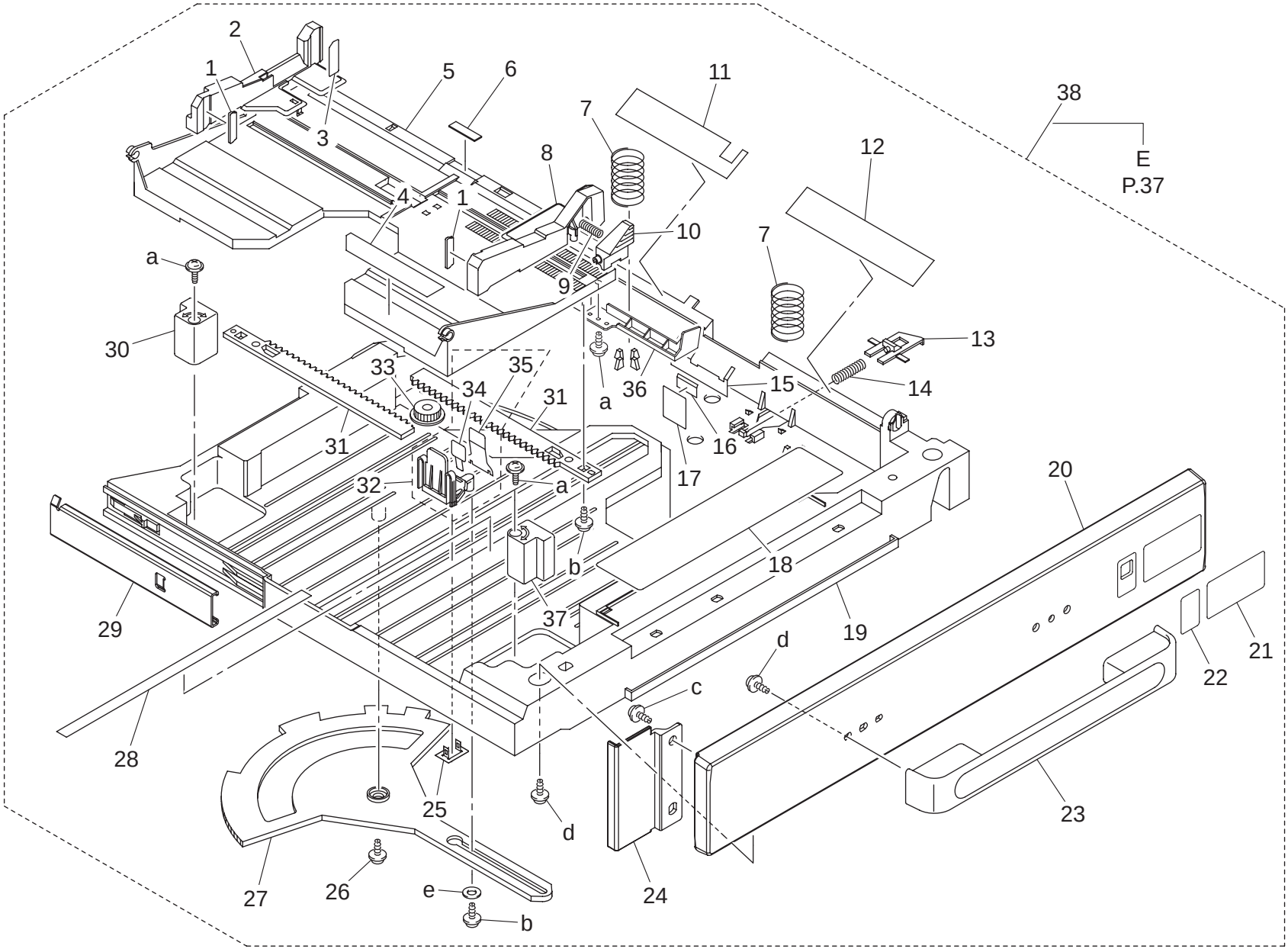

Key	Part No.	Description		Destinations	Class	QTY	Standard parts
1	4036 3086 01	BRAKE	ブレーキ材		D	2	a-9739 0308 14
2	4036 3028 01	REGULATING PLATE	規制板		C	1	b-9739 0310 14
3	4004 7324 01	LABEL CAPACITY	ラベル　積載量		C	1	c-9739 0408 14
4	4036 7314 01	LABEL MP CD	ラベル　マルチパーパス　ＣＤ		D	1	d-9739 0410 14
5	4036 3022 01	LIFTING PLATE	押上板		D	1	e-9716 0300 01
6	4687 3281 01	FRICTION SHEET	摩擦板		C	1	
7	4134 3106 01	PRESSURE SPRING	圧縮コイルばね		C	2	
8	4036 3008 01	REGULATING PLATE	規制板		C	1	
9	4011 3011 01	PRESSURE SPRING	圧縮コイルばね		C	1	
10	4037 3210 01	LEVER	レバー		C	1	
11	4004 3040 02	GUIDE	ガイド		C	1	
12	4004 3024 01	GUIDE	ガイド		C	1	
13	1164 3061 01	LEVER	レバー		C	1	
14	1164 3062 01	PRESSURE SPRING	圧縮コイルばね		C	1	
15	4004 3033 01	GUIDE PLATE	ガイド板		D	1	
16	4004 3038 01	GUIDE	ガイド		C	1	
17	4004 3008 01	SEAL	シール		C	1	
18	4038 7337 01	LABEL PAPER SUPPLY	ラベル　ペーパー補給		C	1	
19	4036 3021 02	CASSETTE	カセット		D	1	
20	4038 3071 02	COVER	カバー		C	1	
21	4038 7312 01	LABEL NUMBER	ラベル　段数表示		C	1	
22	4030 7301 02	LABEL NEAR EMPTY	ラベル　ニアエンプティ		C	1	
23	4036 3025 01	HANDLE	取手		C	1	
24	4038 3020 03	COVER	カバー（ＭＰＣ）		C	1	
25	4004 3031 01	BRACKET	取付板		D	1	
26	4163 5293 01	SCREW	ねじ		C	1	
27	4004 3051 02	LEVER	レバー		C	1	
28	4036 7313 01	LABEL MP FD	ラベル　マルチパーパス　ＦＤ		D	1	
29	4039 5604 00	RAIL	レール（補助・左）		D	1	
30	4037 3227 01	SPACER	スペーサ		D	1	
31	4004 3032 01	RACK	ラック		C	2	
32	4038 R712 00	REGULATING PLATE R ASSY	後端規制 ＡＳＳＹ		C	1	
33	1164 3045 01	GEAR 20T	ギヤ　２０Ｔ		C	1	
34	4021 3036 01	GUIDE	ガイド		C	1	
35	4004 3042 01	GUIDE	ガイド		C	1	
36	4036 3019 01	LEVER	レバー		D	1	
37	4037 3226 01	SPACER	スペーサ		D	1	
38	9J06 R716 00	MULTIPURPOSE CASSETTE	ＭＰ カセット		S	1	

MPT CASSETTE PAPER TAKE-UP SECTION

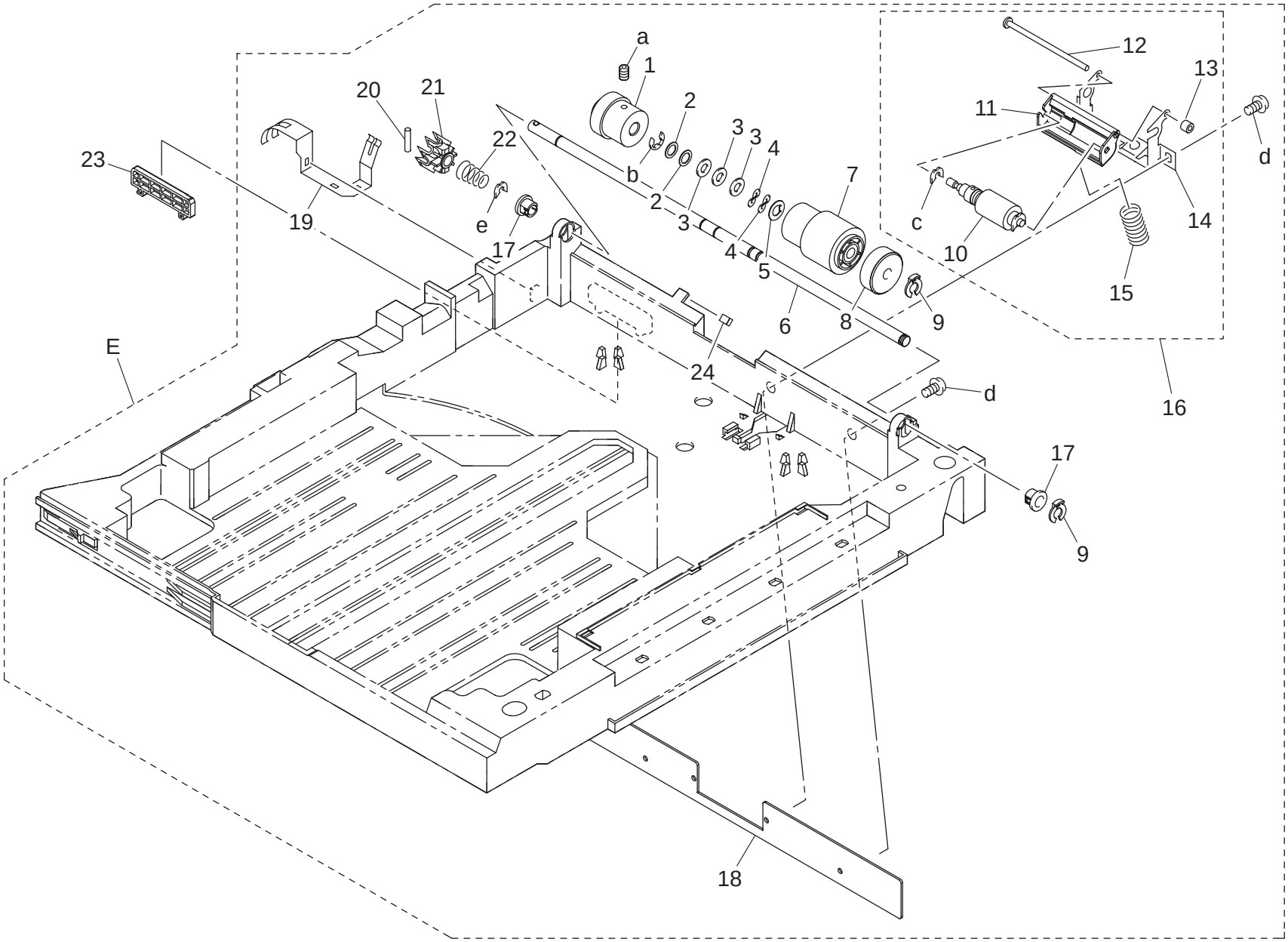

Key	Part No.	Description		Destinations	Class	QTY	Standard parts
1	4038 3063 01	WEIGHT	重り		D	1	a-9684 0406 08
2	4036 3030 01	WASHER	ワッシャ		C	2	b-9721 0600 01
3	4036 3031 01	WASHER	ワッシャ		C	3	c-4425 3002 01
4	4011 3020 01	WASHER	ワッシャ		C	2	d-9654 0408 14
5	1164 3066 01	WASHER	ワッシャ		C	1	e-1066 1151 01
6	4004 3001 02	SHAFT	シャフト		D	1	
7	4034 3012 01	ROLLER	ローラ		A	1	
8	4004 3005 01	COLLAR	カラー		C	1	
9	4658 3046 01	STOP RING	止め輪		C	2	
10	4034 0151 01	SEPARATION ROLLER	分離ローラ		A	1	
11	4038 5654 00	HOLDER	ホルダ		D	1	
12	4658 3040 01	SHAFT	シャフト		D	1	
13	4038 5655 00	COLLAR	カラー		D	1	
14	4004 3004 01	BRACKET	取付板		D	1	
15	4004 3006 03	PRESSURE SPRING	圧縮コイルばね		C	1	
16	9J06 R723 00	ROLLER ASSY	ＭＰ サバキ ＡＳＳＹ		C	1	
17	1164 3003 01	BUSHING	軸受		C	2	
18	4036 3040 01	REINFORCE PLATE	補強板		D	1	
19	4036 3018 01	EARTH GROUND	アース		D	1	
20	4036 3014 01	PIN	ピン		D	1	
21	1164 3004 03	PAWL	爪		C	1	
22	1164 3005 02	PRESSURE SPRING	圧縮コイルばね		C	1	
23	4039 5602 00	SPACER	スペーサ		D	1	
24	1164 3009 01	CLANING MATERIAL	清掃具		C	1	

2ND CASSETTE PAPER TAKE-UP SECTION

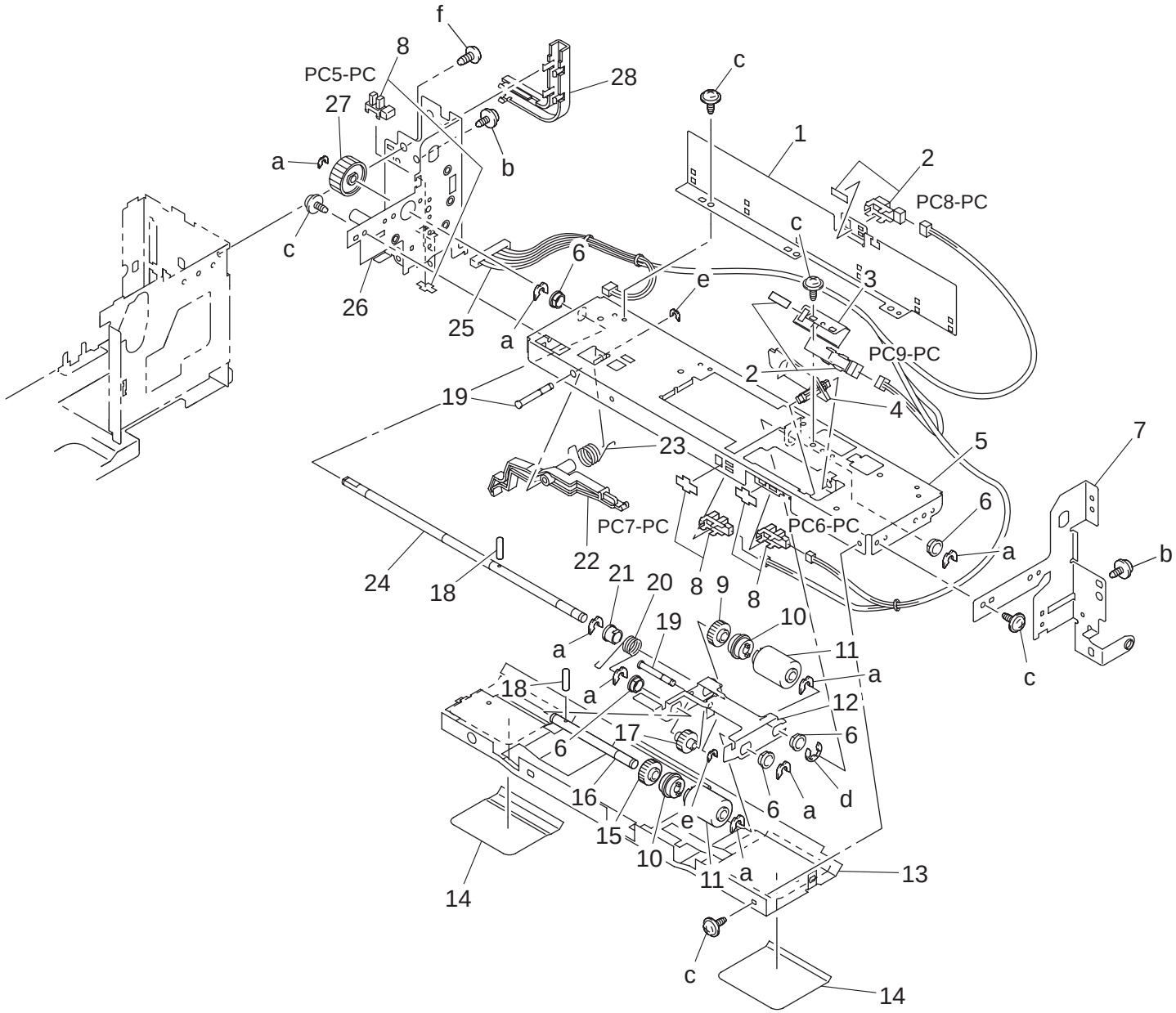

Key	Part No.	Description		Destinations	Class	QTY	Standard parts
1	4348 3046 01	BRACKET	取付板		D	1	a-4425 3001 01
2	4037 0902 01	PHOTO INTERRUPTER	フォトインタラプター		B	2	b-9735 0408 14
3	4348 3049 01	BRACKET	取付板		D	1	c-9735 0306 14
4	4030 3016 12	ACTUATOR	アクチュエータ		C	1	d-9721 0400 01
5	4030 3010 02	FRAME	フレーム		D	1	e-4425 3002 01
6	4131 3003 01	BUSHING	軸受		C	5	f-9743 0408 14
7	4067 3816 02	FRAME	フレーム		D	1	
8	4037 0906 01	PHOTO INTERRUPTER	フォトインタラプター		B	3	
9	4425 3013 01	GEAR 30T	ギヤ　３０Ｔ		C	1	
10	4030 3034 01	CLUTCH	クラッチ		C	2	
11	4030 3005 01	ROLLER	ローラ		A	2	
12	4030 3002 02	HOLDER	ホルダ		D	1	
13	4030 3095 01	GUIDE PLATE	ガイド板		D	1	
14	4030 3036 01	GUIDE	ガイド		C	2	
15	4425 3016 01	GEAR 32T	ギヤ　３２Ｔ		C	1	
16	4030 3003 01	SHAFT	シャフト		D	1	
17	4030 3008 01	GEAR 29T	ギヤ　２９Ｔ		C	1	
18	1067 2501 01	PIN	ヒ゜ン		C	2	
19	4030 3020 02	SHAFT	シャフト		D	2	
20	4030 3030 01	TORSION SPRING	ねじりコイルばね		C	1	
21	1065 3086 01	BUSHING	シ゛クウケ		C	1	
22	4030 3011 02	LEVER	レバー		C	1	
23	4030 3012 01	TORSION SPRING	ねじりコイルばね		C	1	
24	4348 3047 01	SHAFT	シャフト		D	1	
25	4067 6804 01	WIRE HARNESS ASSY	ハーネス ＡＳＳＹ		D	1	
26	4067 0204 03	FRAME ASSY	フレーム ＡＳＳＹ		D	1	
27	4348 3029 01	GEAR 32T	ギヤ　３２Ｔ		C	1	
28	4348 3070 02	COVER	カバー		D	1	

2ND CASSETTE PAPER TAKE-UP SECTION

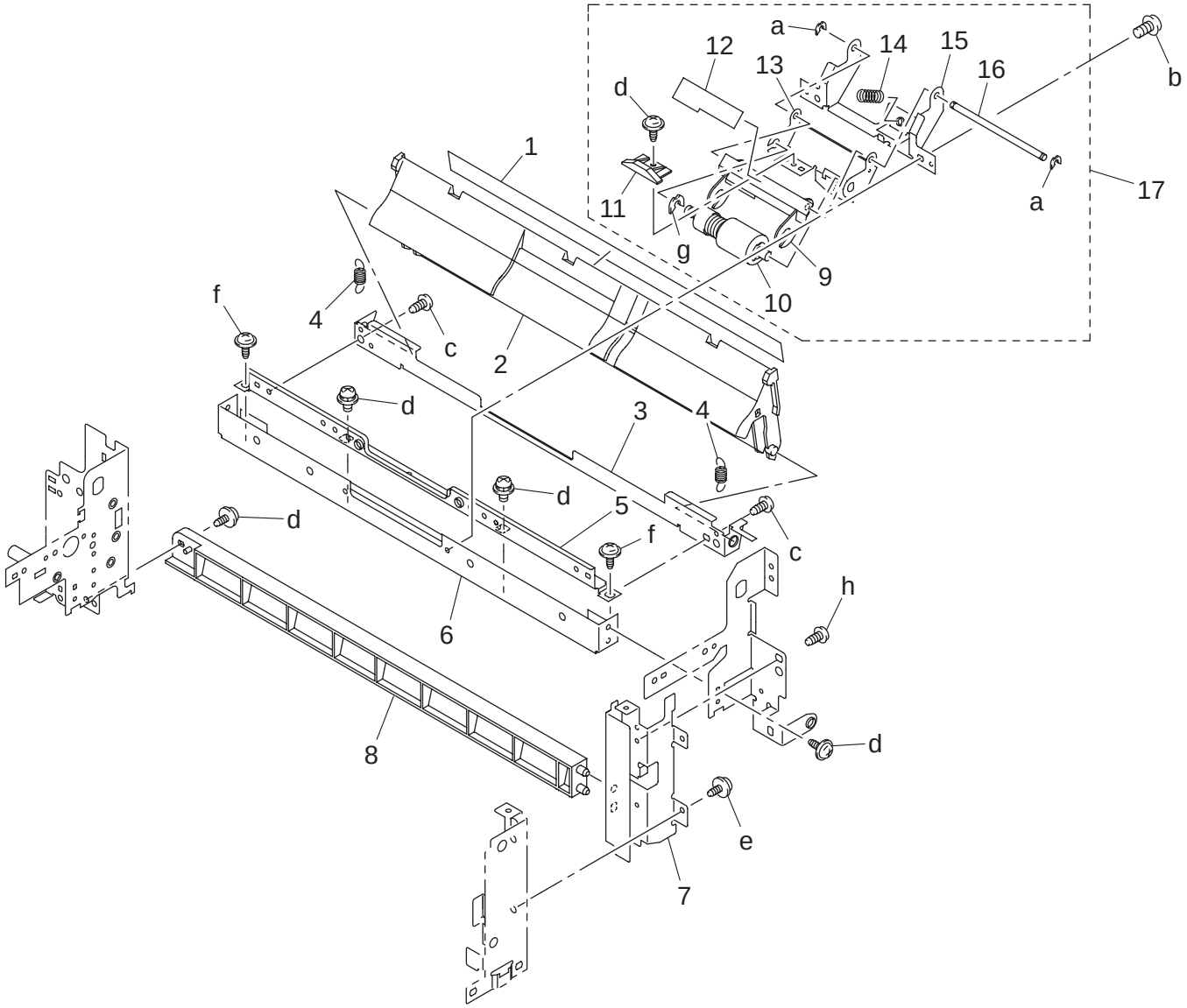

Key	Part No.	Description		Destinations	Class	QTY	Standard parts
1	4030 3105 01	GUIDE	ガイド		C	1	a-4425 3002 01
2	4030 3124 03	GUIDE	ガイド		D	1	b-9743 0308 14
3	4030 3129 03	BRACKET	取付板		D	1	c-9743 0306 14
4	4030 3125 01	TENSION SPRING	引張コイルばね		C	2	d-9735 0306 14
5	4030 3037 01	REINFORCE PLATE	補強板		D	1	e-9735 0308 14
6	4030 3025 02	BRACKET	取付板		D	1	f-9646 0308 14
7	4036 3846 02	STAY	支柱		D	1	g-4425 3001 01
8	4036 3838 01	GUIDE PLATE	ガイド板		D	1	h-9743 0408 14
9	4030 3077 01	GUIDE	ガイド		D	1	
10	4030 0151 01	SEPARATION ROLLER ASSY	分離ローラ ＡＳＳＹ		A	1	
11	4030 3078 01	LEVER	レバー		C	1	
12	4030 3079 01	GUIDE	ガイド		C	1	
13	4030 3013 01	HOLDER	ホルダ		D	1	
14	4030 3017 03	PRESSURE SPRING	圧縮コイルばね		C	1	
15	4067 5614 00	BRACKET	取付板（さばきホルダ）		D	1	
16	4030 3039 01	SHAFT	シャフト		D	1	
17	9J06 R729 00	ROLLER ASSY	ユニバーサルサバキローラー ＡＳＳＹ		C	1	

2ND CASSETTE PAPER TAKE-UP SECTION

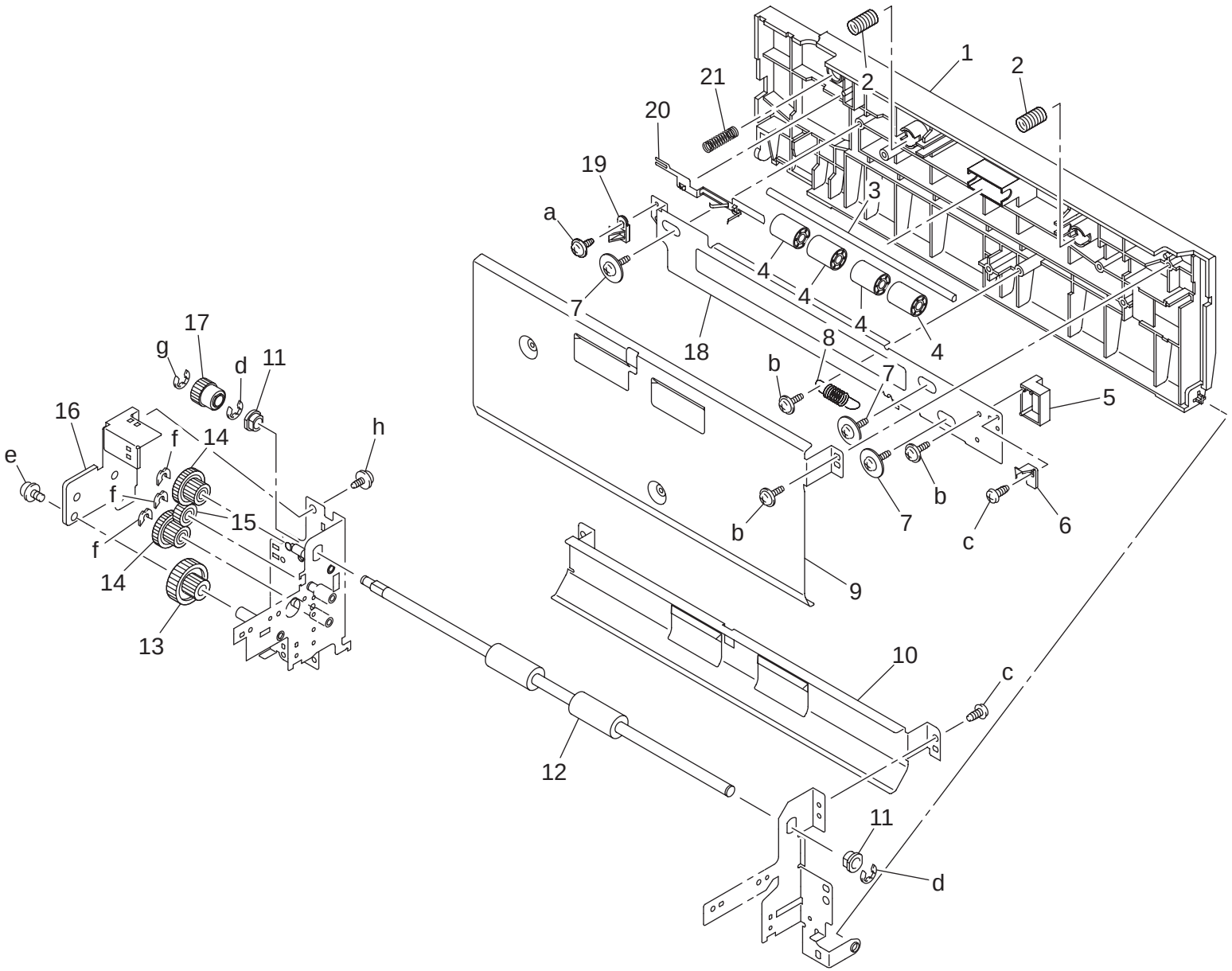

Key	Part No.	Description		Destinations	Class	QTY	Standard parts
1	4067 3822 03	DOOR	扉		C	1	a-9735 0308 14
2	4030 3123 01	PRESSURE SPRING	圧縮コイルばね		C	2	b-9739 0308 14
3	4348 3071 01	SHAFT	シャフト		D	1	c-9743 0306 14
4	4030 3122 01	ROLL	ころ		C	4	d-9721 0600 01
5	4067 3833 01	HANDLE	取手		C	1	e-9646 0306 14
6	4036 3823 01	LEVER	レバー		C	1	f-4425 3001 01
7	4163 5293 01	SCREW	ねじ		C	3	g-9721 0400 01
8	4030 3116 01	TENSION SPRING	引張コイルばね		C	1	h-9735 0306 14
9	4067 3834 01	GUIDE PLATE	ガイド板		D	1	
10	4348 3042 01	GUIDE PLATE	ガイド板		D	1	
11	4131 3532 02	BUSHING	軸受		C	2	
12	4348 3011 04	ROLLER	ローラ		C	1	
13	4348 3048 01	GEAR 19/40T	ギヤ　１９／４０Ｔ		C	1	
14	4348 3031 01	GEAR 19/32T	ギヤ　１９／３２Ｔ		C	2	
15	4348 3032 01	GEAR 20T	ギヤ　２０Ｔ		C	1	
16	4348 3069 03	BRACKET	取付板		D	1	
17	4348 3028 01	GEAR 22T	ギヤ　２２Ｔ		C	1	
18	4067 3832 01	BRACKET	取付板		D	1	
19	4038 6251 00	LEVER	レバー		C	1	
20	4067 3825 01	EARTH GROUND	アース		D	1	
21	4036 3831 01	PRESSURE SPRING	圧縮コイルばね		C	1	

2ND CASSETTE FRAME

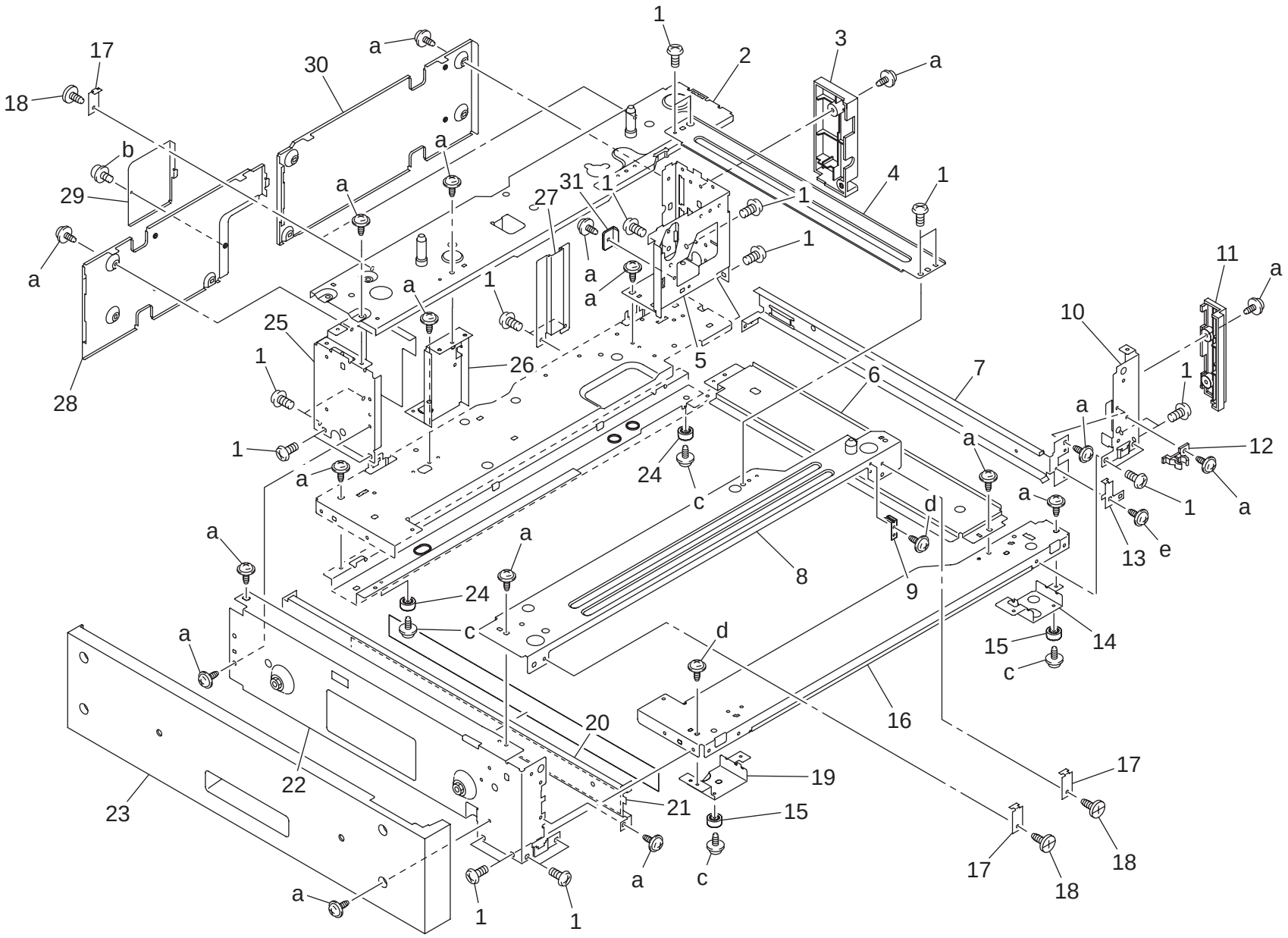

Key	Part No.	Description		Destinations	Class	QTY	Standard parts
1	4002 2581 01	SCREW	ねじ		C	21	a-9735 0408 14
2	4067 0202 03	PLATE ASSY	天板 ＡＳＳＹ		D	1	b-9646 0308 14
3	4067 3803 02	COVER	カバー（右後）		D	1	c-9735 0308 14
4	4067 3818 02	REINFORCE PLATE	補強板		D	1	d-9735 0306 14
5	4036 3810 03	STAY	支柱		D	1	e-9654 0308 14
6	4036 3849 01	REINFORCE PLATE	補強板		D	1	
7	4348 3042 01	GUIDE PLATE	ガイド板		D	1	
8	4067 0201 02	PLATE ASSY	天板 ＡＳＳＹ（前）		D	1	
9	4067 3821 01	PLATE SPRING	板ばね		D	1	
10	4036 3808 03	STAY	支柱		D	1	
11	4067 3802 01	COVER	カバー		D	1	
12	4348 2037 02	HOLDER	ホルダ		D	1	
13	4348 2038 02	BRACKET	取付板		D	1	
14	4036 3843 02	BRACKET	取付板		D	1	
15	0996 3055 01	RUBBER FOOT	コ゛ムアシ		C	2	
16	4036 3814 01	BASE FRAME	台板		D	1	
17	4658 3140 02	STOP PLATE	固定板		C	4	
18	4658 3042 02	SHOULDER SCREW	段ねじ		C	4	
19	4036 3828 02	BRACKET	取付板		D	1	
20	4348 2044 01	GUIDE	ガイド		C	1	
21	4348 2041 02	BRACKET	取付板		D	1	
22	4067 3807 03	STAY	支柱（左前）		D	1	
23	4067 3805 02	LEFT COVER	左カバー		D	1	
24	4030 2080 01	RUBBER FOOT	ゴム足		D	2	
25	4036 3809 01	STAY	支柱		D	1	
26	4036 3811 01	BRACKET	取付板		D	1	
27	4067 3871 01	REINFORCE PLATE	補強板		D	1	
28	4067 3856 02	REAR COVER LEFT	後カバー　左		D	1	
29	4067 3857 02	COVER	カバー		D	1	
30	4067 3855 02	REAR COVER RIGHT	後カバー　右		D	1	
31	4348 2040 01	SPACER	スペーサ		D	1	

2ND CASSETTE DRIVE SECTION

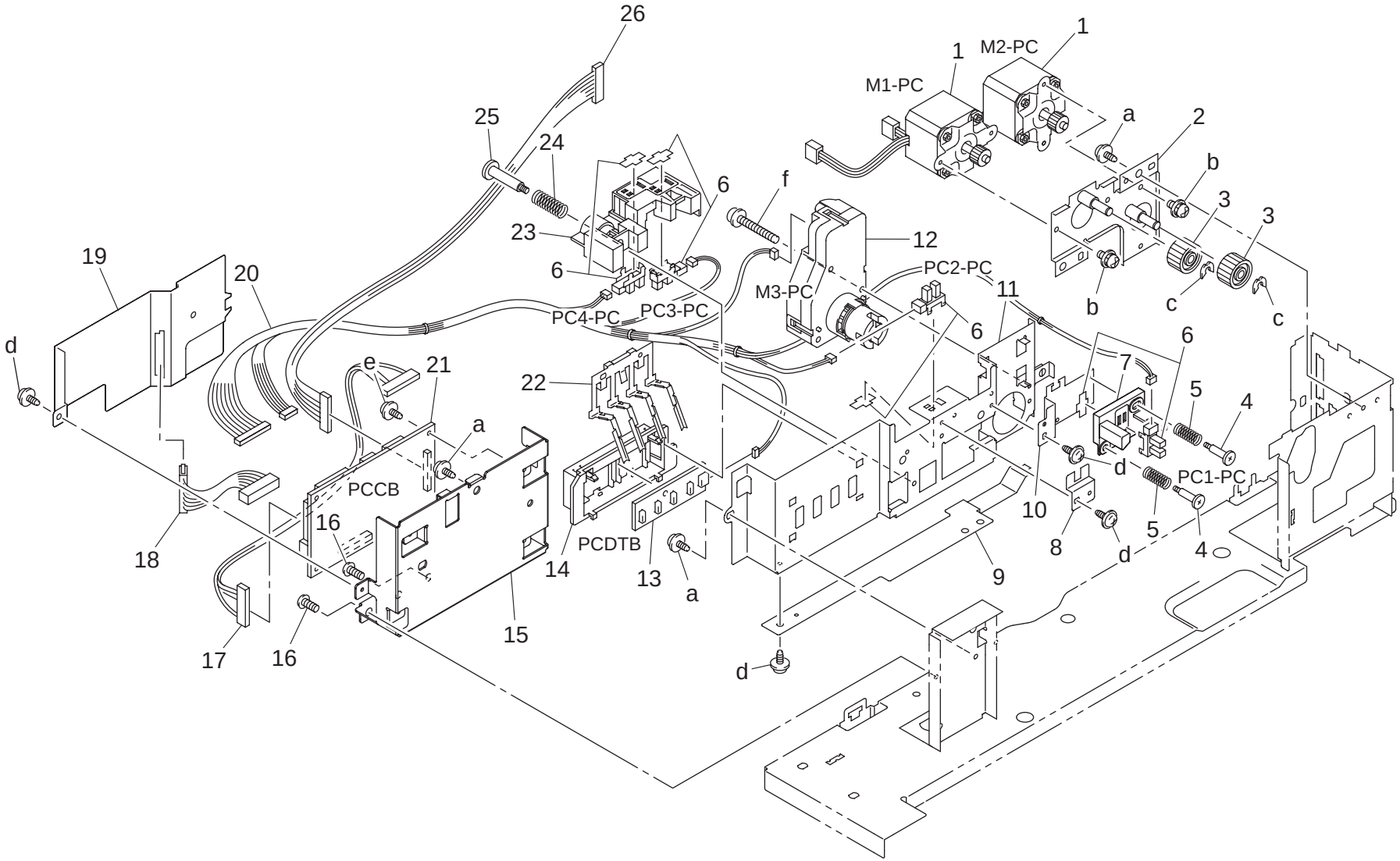

Key	Part No.	Description		Destinations	Class	QTY	Standard parts
1	9314 1300 61	MOTOR	パルスモータ		B	2	a-9735 0408 14
2	4067 0203 02	FRAME ASSY	フレーム ＡＳＳＹ		D	1	b-9646 0306 14
3	4348 3030 01	GEAR 27T	ギヤ　２７ Ｔ		C	2	c-4425 3001 01
4	4030 3224 02	SHOULDER SCREW	段ねじ		C	2	d-9735 0306 14
5	4030 3081 01	PRESSURE SPRING	圧縮コイルばね		C	2	e-9735 0308 14
6	4037 0906 01	PHOTO INTERRUPTER	フォトインタラプター		B	4	f-9646 0330 14
7	4030 3083 01	HOLDER	ホルダ		D	1	
8	4030 3048 02	BRACKET	取付板		D	1	
9	4030 3049 01	BRACKET	取付板		D	1	
10	4030 3208 02	BRACKET	取付板		D	1	
11	4030 3046 03	BRACKET	取付板		D	1	
12	9312 1200 31	MOTOR	マグネットモータ		B	1	
13	4037 0104 01	PSDTB	ＰＳＤＴＢ		C	1	
14	4011 3012 01	HOLDER	ホルダ		D	1	
15	4067 3815 02	BRACKET	取付板		D	1	
16	4002 2581 01	SCREW	ねじ		C	2	
17	4067 6801 04	WIRE HARNESS ASSY	ハーネス ＡＳＳＹ		D	1	
18	4067 6805 01	WIRE HARNESS ASSY	ハーネス ＡＳＳＹ		D	1	
19	4067 3820 01	COVER	カバー		D	1	
20	4067 6802 01	WIRE HARNESS ASSY	ハーネス ＡＳＳＹ		D	1	
21	4067 0101 03	PCCB	ＰＣＣＢ		C	1	
22	4030 3091 01	LEVER	レバー		C	1	
23	4030 3047 02	HOLDER	ホルダ		D	1	
24	4002 3110 01	PRESSURE SPRING	圧縮コイルばね		C	1	
25	4002 3131 01	SHOULDER SCREW	段ねじ		C	1	
26	4067 6803 02	WIRE HARNESS ASSY	ハーネス ＡＳＳＹ		D	1	

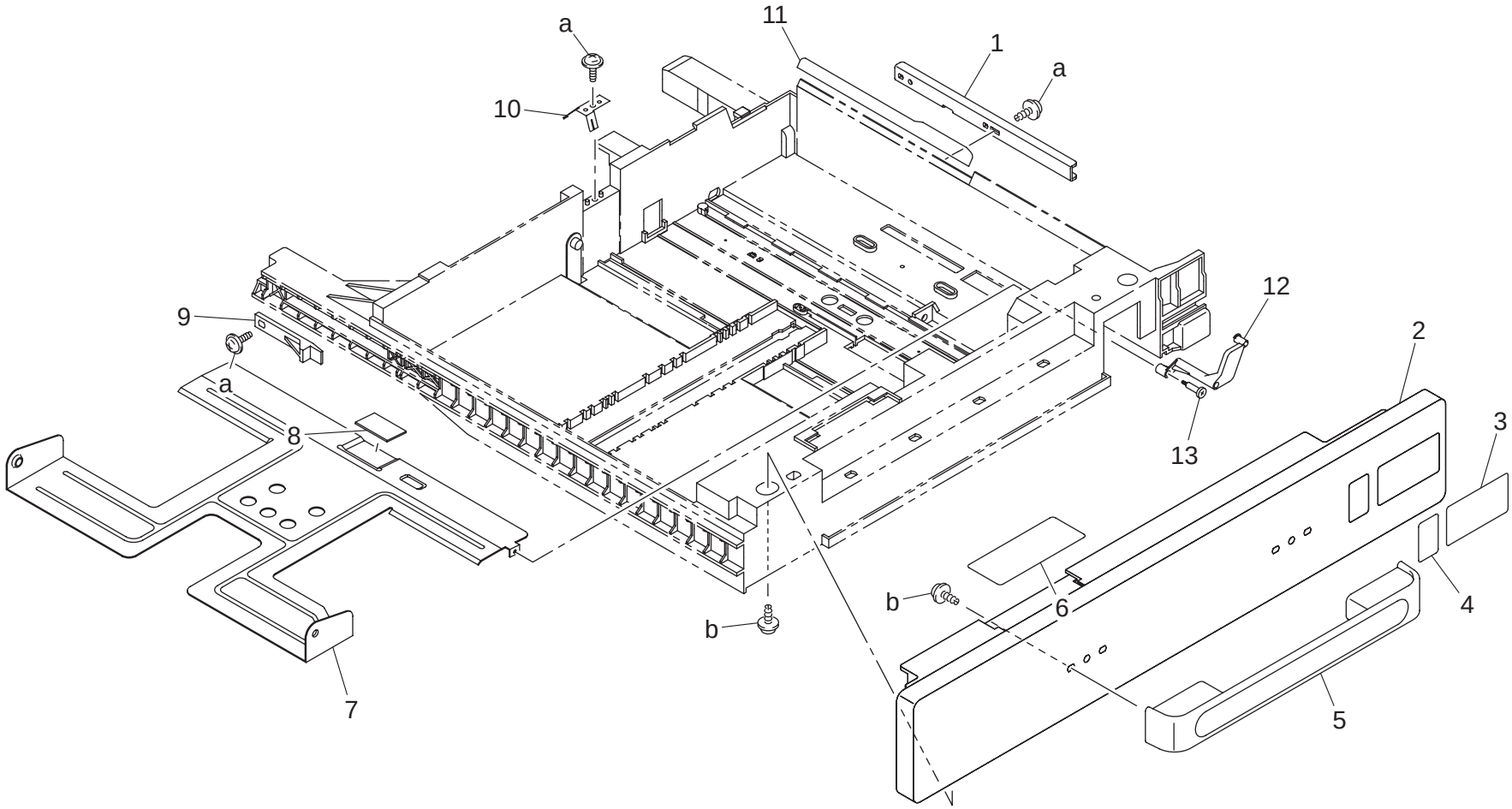
a
11
1
a
10
12
9
2
a
3
8
13
b
6
4
b
7
5

Key	Part No.	Description		Destinations	Class	QTY	Standard parts
1	4030 3229 02	REINFORCE PLATE	補強板		D	1	a-9739 0308 14
2	4067 3852 01	FRONT COVER	前カバー		C	1	b-9739 0410 14
3	4038 7321 01	LABEL NUMBER	ラベル　段数表示		C	1	
4	4030 7301 02	LABEL NEAR EMPTY	ラベル　ニアエンプティ		C	1	
5	4036 3025 01	HANDLE	取手		C	1	
6	4040 7304 01	LABEL PAPER SUPPLY	ラベル　ペーパー補給		C	1	
7	4030 3203 01	LIFTING PLATE	押上板		D	1	
8	4030 3226 01	FRICTION SHEET	摩擦板		C	1	
9	4498 3469 01	STOPPER	ストッパ		D	1	
10	4030 3223 02	EARTH GROUND	アース		C	1	
11	4030 3222 03	GUIDE	ガイド		C	1	
12	4030 3221 01	LEVER	レバー		C	1	
13	4030 3224 02	SHOULDER SCREW	段ねじ		C	1	

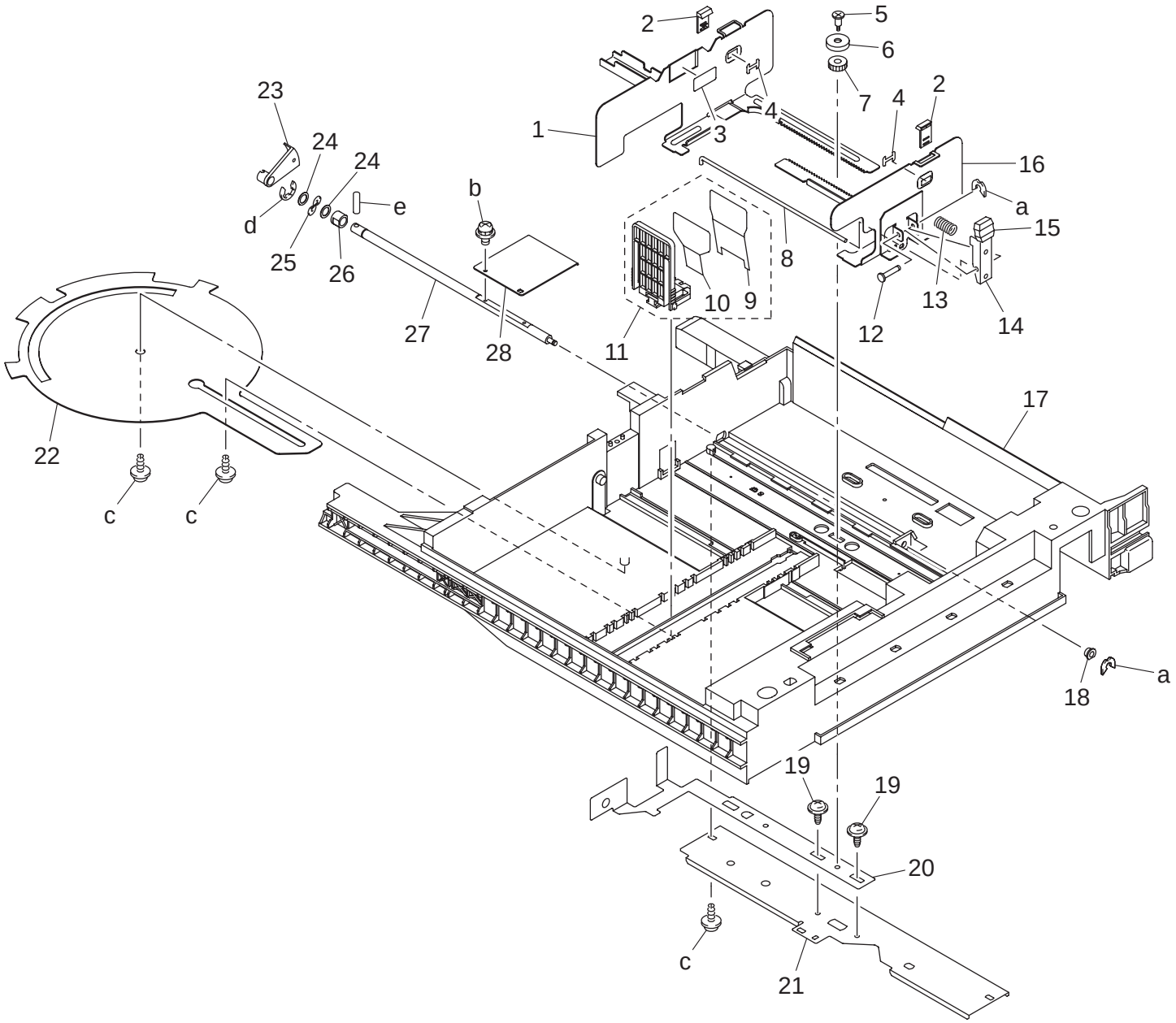
1
2
3
4
5
6
7
8
9
10
11
12
13
14
15
16
17
18
19
20
21
22
23
24
25
26
27
28
a
b
c
d
e

Key	Part No.	Description		Destinations	Class	QTY	Standard parts
1	4030 3212 01	REGULATING PLATE	規制板		C	1	a-4425 3002 01
2	4658 3048 01	GUIDE	ガイド		C	2	b-9646 0308 14
3	4002 7306 01	LABEL CARRYING CAPACITY	ラベル　積載量		C	1	c-9739 0308 14
4	4658 3049 01	STOPPER	ストッパ		C	2	d-1066 1151 01
5	4030 3214 02	SHOULDER SCREW	段ねじ		C	1	e-9754 3025 08
6	4030 3215 01	GUIDE	ガイド		D	1	
7	4658 3012 01	GEAR 14T	ギヤ　１４Ｔ		C	1	
8	4030 3217 01	SHAFT	シャフト		D	1	
9	4030 3228 12	GUIDE	ガイド		C	1	
10	4030 3227 01	GUIDE	ガイド		C	1	
11	9J06 R738 00	REGULATION PLATE ASSY	後端規制板 ＡＳＳＹ		C	1	
12	4498 3826 01	SHAFT	シャフト		D	1	
13	4498 3825 01	PRESSURE SPRING	圧縮コイルばね		C	1	
14	4128 3823 01	LEVER	レバー		C	1	
15	4037 3204 01	KNOB	つまみ		C	1	
16	4030 3211 02	REGULATING PLATE	規制板		C	1	
17	4030 3201 06	CASSETTE	カセット		D	1	
18	0992 3014 01	BUSHING	ジクウケ		C	1	
19	4498 3834 01	SCREW	ねじ		C	2	
20	4030 3216 01	BRACKET	取付板		D	1	
21	4030 3218 01	BRACKET	取付板		D	1	
22	4002 3108 01	LEVER	レバー		C	1	
23	4030 3207 01	ACTUATOR	アクチュエータ		C	1	
24	4011 3021 01	WASHER	ワッシャ		C	2	
25	4011 3020 01	WASHER	ワッシャ		C	1	
26	1274 3603 01	BUSHING	ジクウケ		C	1	
27	4030 3205 01	SHAFT	シャフト		D	1	
28	4030 3206 01	LEVER	レバー		D	1	

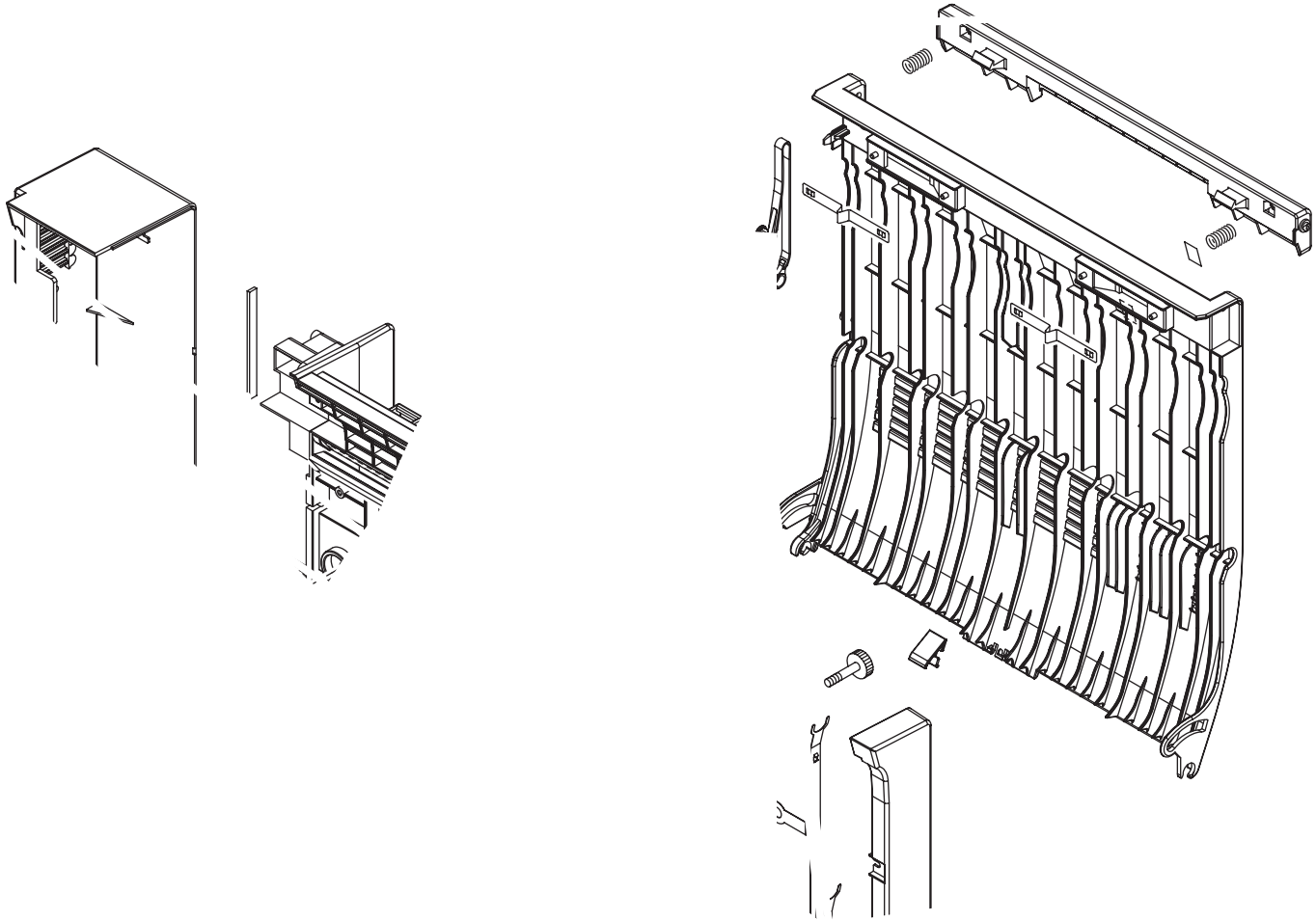

Key	Part No.	Description		Destinations	Class	QTY	Standard parts
1	4066 3710 01	STOPPER	ストッパ		C	1	a-9739 0308 14
2	4066 3705 01	PRESSURE SPRING	圧縮コイルばね		C	2	b-9735 0308 14
3	4066 3703 02	LEVER	レバー		C	1	
4	4066 7301 02	LABEL	ラベル		C	1	
5	4657 3736 01	PLATE SPRING	板ばね		C	2	
6	4066 3702 04	DOOR	扉		C	1	
7	4066 3738 01	SHOULDER SCREW	段ねじ		C	2	
8	4066 3741 01	AUXILIARY MEMBER	補助部材		C	1	
9	4066 3711 03	FRONT COVER	前カバー		C	1	
10	4066 3726 02	PLATE SPRING	板ばね		D	1	
11	4575 3707 01	WASHER	ワッシャ		C	2	
12	4066 3736 01	AUXILIARY MEMBER	補助部材		D	2	
13	4066 3701 06	BASE FRAME	台板		C	1	
14	4657 3725 01	TORSION SPRING	ねじりコイルばね		C	2	
15	4066 3729 01	ACTUATOR	アクチュエータ		C	2	
16	4066 3754 01	REGULATING PLATE	規制板		C	1	
17	4066 3704 03	REAR COVER	後カバー		C	1	
18	4066 3777 01	SEAL	シール		C	2	
19	4066 3778 01	SEAL	シール		C	1	
20	4066 3739 01	SEAL	シール		C	1	

DUPLEX UNIT

bizhub C352: ALL AREAS
bizhub C300: EUROPE, USA, CANADA, BRAZIL, C.S AMERICA (120V AREAS) ONLY

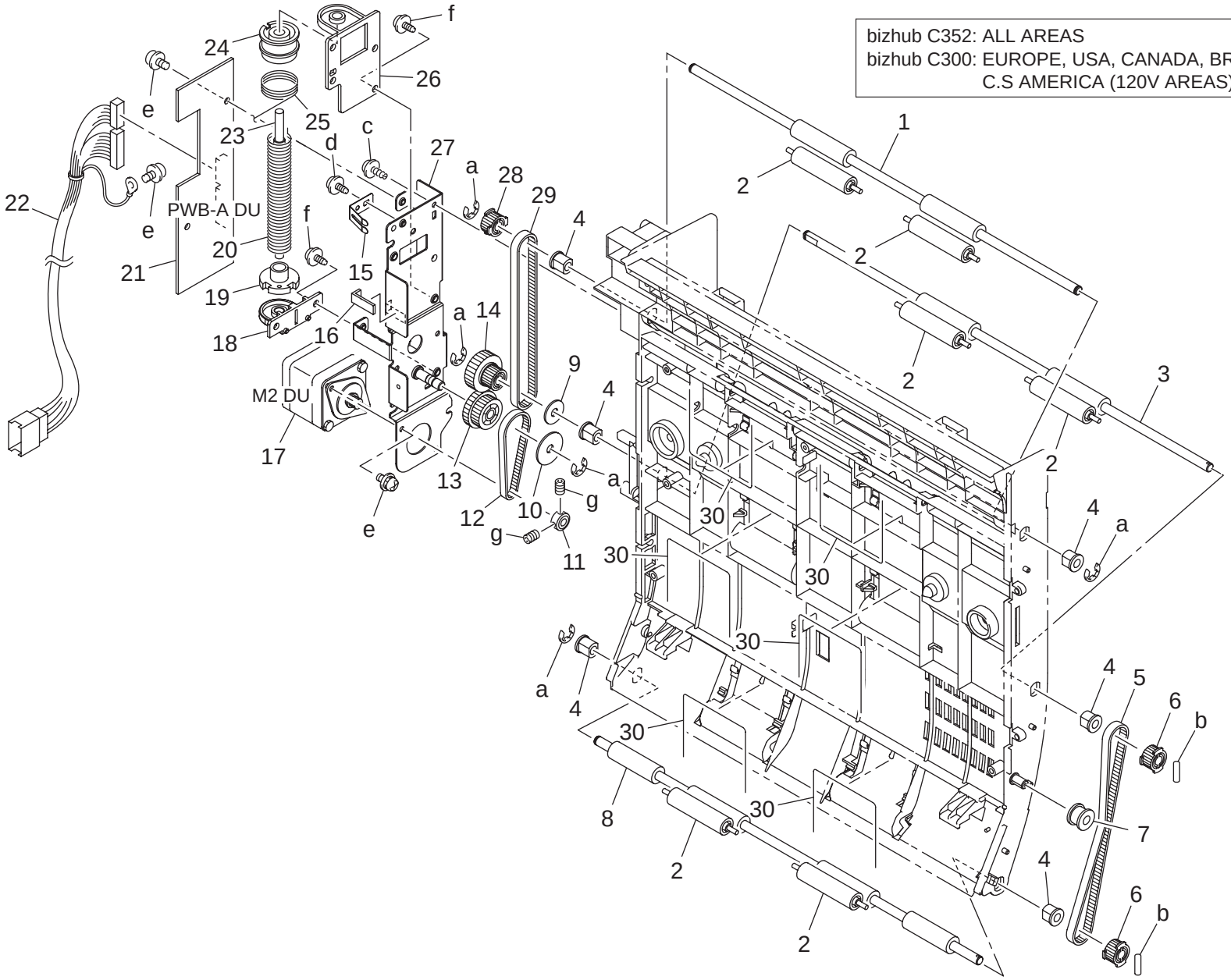

bizhub C300/bizhub C352

Key	Part No.	Description		Destinations	Class	QTY	Standard parts
1	4066 3706 01	ROLLER	ローラ		C	1	a-9721 0400 01
2	4497 3116 01	ROLL	ころ		C	6	b-9752 2008 50
3	4066 3707 01	ROLLER	ローラ		C	1	c-9739 0308 14
4	4066 3752 01	BUSHING	軸受		C	6	d-9735 0306 14
5	4066 3718 01	TIMING BELT 328L	タイミングベルト　３２８ Ｌ		C	1	e-9646 0306 14
6	4066 3714 01	PULLEY 22T	プーリ　２２ Ｔ		C	2	f-9735 0408 14
7	4657 3714 01	ROLL	ころ		C	1	g-9686 0303 08
8	4066 3709 01	ROLLER	ローラ		C	1	
9	4330 3720 01	WASHER	ワッシャ		C	1	
10	4066 3731 01	WASHER	ワッシャ		C	1	
11	4066 3747 01	COLLAR	カラー		C	1	
12	4038 5893 01	TIMING BELT 144L	タイミングベルト　１４４ Ｌ		C	1	
13	4066 3732 02	GEAR 25/33T	ギヤ　２５／３３ Ｔ		C	1	
14	4066 3713 02	GEAR 20/22T	ギヤ　２０／２２ Ｔ		C	1	
15	4066 3730 01	PLATE SPRING	板ばね		D	1	
16	4066 3743 01	SEAL	シール		C	1	
17	9314 1001 04	MOTOR	パルスモータ		B	1	
18	4066 3763 01	HOLDER	ホルダ		D	1	
19	4330 3762 01	COLLAR	カラー		C	1	
20	4066 3761 01	TORSION SPRING	ねじりコイルばね		C	1	
21	4066 0101 02	ADDB	ＡＤＤＢ		I	1	
22	4066 6801 01	WIRE HARNESS ASSY	ハーネス ＡＳＳＹ		C	1	
23	4066 3762 01	SHAFT	シャフト		D	1	
24	4330 3761 04	PULLEY	プーリ		C	1	
25	4330 3753 02	WIRE	ワイヤ		C	1	
26	4330 3738 02	HOLDER	ホルダ		D	1	
27	4066 0208 03	BRACKET ASSY	取付板 ＡＳＳＹ		D	1	
28	4066 3715 01	PULLEY 22T	プーリ　２２ Ｔ		C	1	
29	4066 3720 01	TIMING BELT 300L	タイミングベルト　３００ Ｌ		C	1	
30	4066 3751 01	MEMBER	押え材		C	6	

DUPLEX UNIT

bizhub C352: ALL AREAS
bizhub C300: EUROPE, USA, CANADA, BRAZIL,
C.S AMERICA (120V AREAS) ONLY

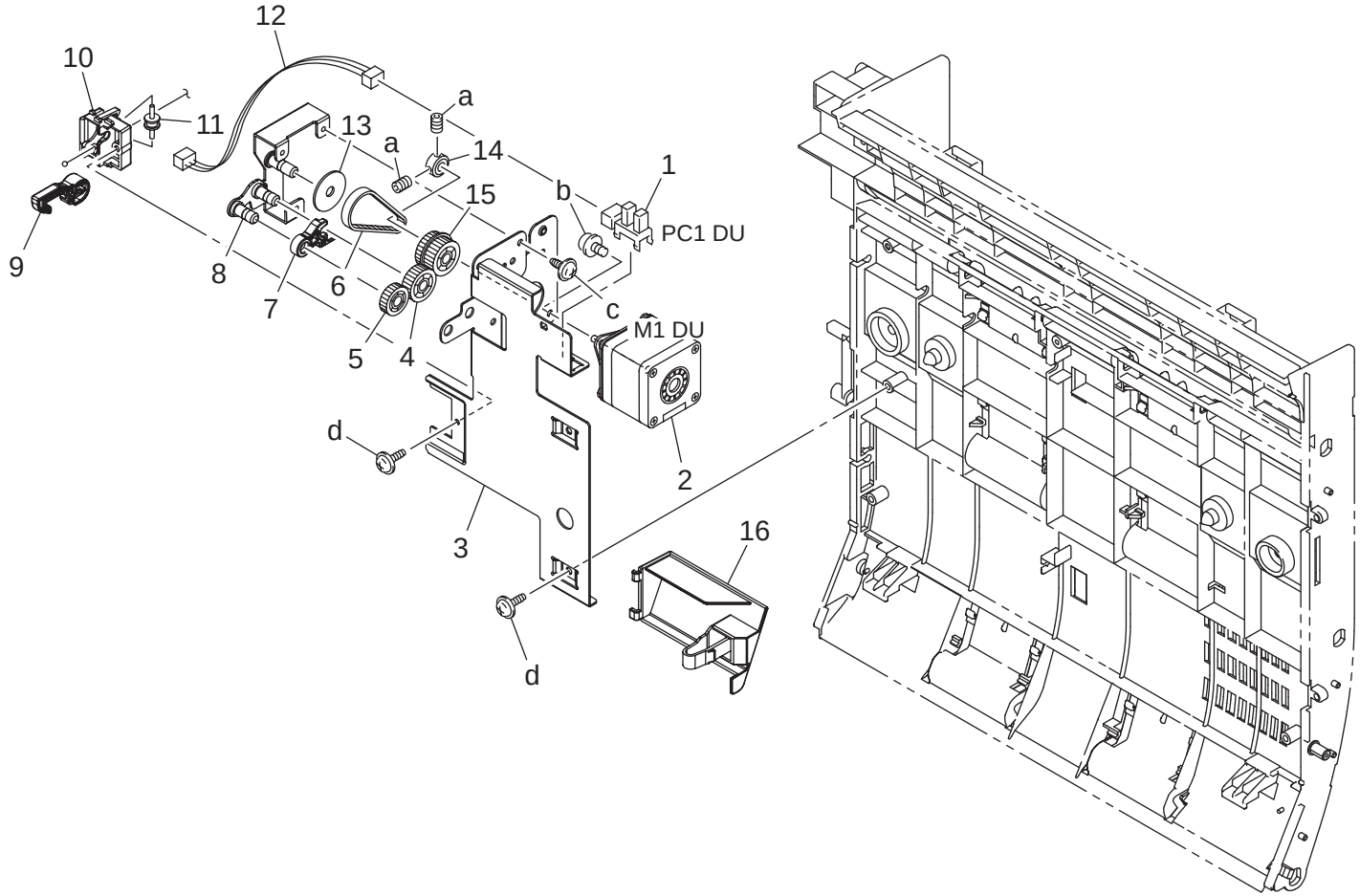

Key	Part No.	Description		Destinations	Class	QTY	Standard parts
1	9335 1300 61	PHOTO INTERRUPTER	フォトインタラプタ		B	1	a-9686 0303 08 b-9646 0306 14 c-9735 0306 14 d-9739 0308 14
2	9314 1001 04	MOTOR	パルスモータ		B	1	
3	4066 3716 04	BRACKET	取付板		D	1	
4	4066 3722 01	GEAR 18T	ギヤ　１８Ｔ		C	1	
5	4038 5876 01	GEAR 14T	ギヤ　１４Ｔ		C	1	
6	4066 3746 01	TIMING BELT 138L	タイミングベルト　１３８Ｌ		C	1	
7	4066 3723 01	RING	リング		C	1	
8	4066 0209 02	BRACKET ASSY	取付板ＡＳＳＹ		D	1	
9	4066 3765 02	HOOK	フック		C	1	
10	4066 3764 02	HOLDER	ホルダ		D	1	
11	4330 3746 03	ROLL	ころ		C	1	
12	4066 6802 01	WIRE HARNESS ASSY	ハーネスＡＳＳＹ		D	1	
13	4066 3731 01	WASHER	ワッシャ		C	1	
14	4066 3747 01	COLLAR	カラー		C	1	
15	4066 3745 01	GEAR 17/30T	ギヤ　１７／３０Ｔ		C	1	
16	4066 3770 03	COVER	カバー		C	1	

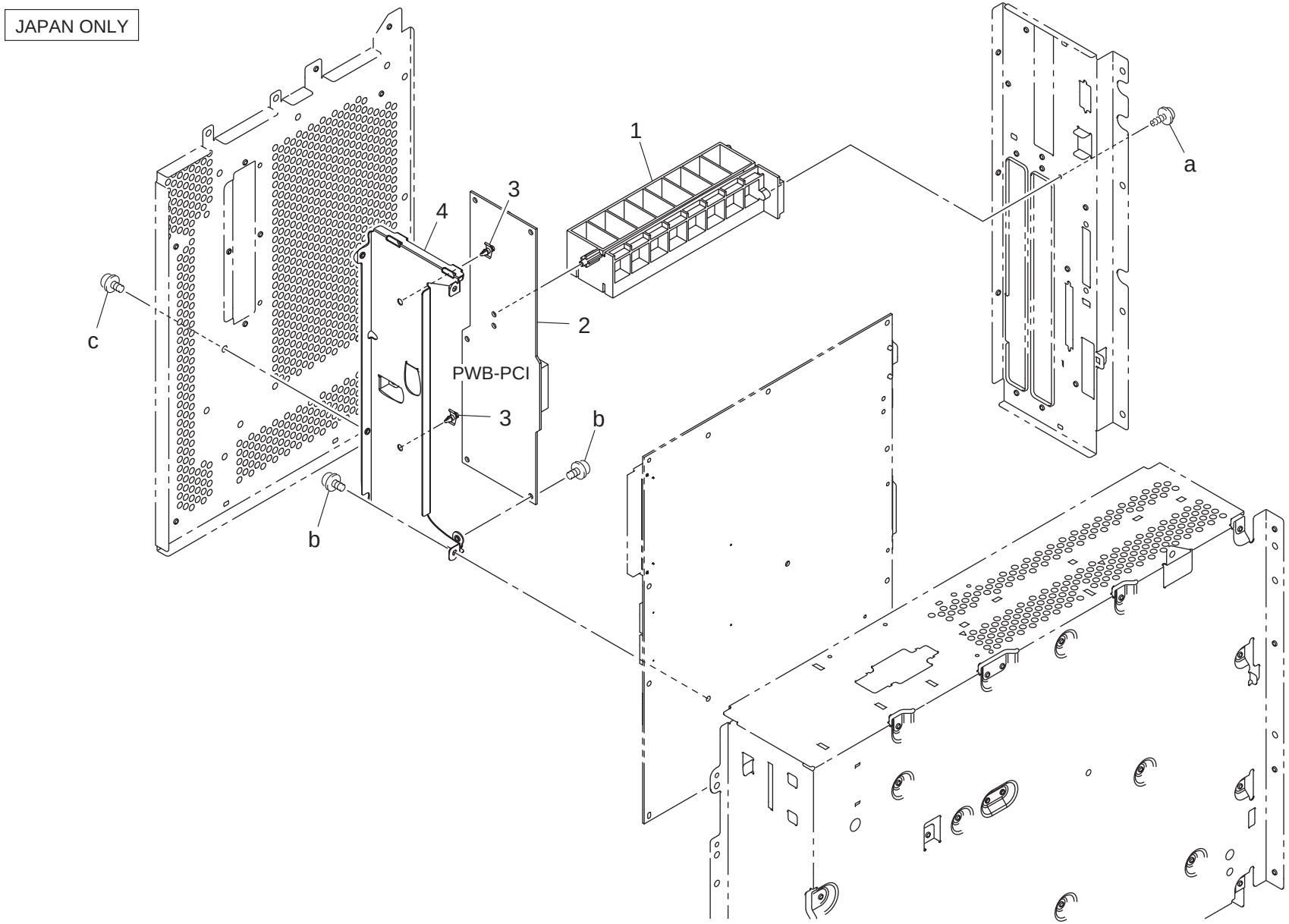
JAPAN ONLY
1
2
3
3
4
a
b
b
c
PWB-PCI

Key	Part No.	Description		Destinations	Class	QTY	Standard parts
1	4038 2310 01	GUIDE	ガイド		D	1	a-9739 0308 14
2	4038 0124 02	PWB-PCI	ＰＷＢ－ＰＣＩ		C	1	b-9646 0308 14
3	9384 1621 21	PWB SUPPORT 6.4H	キハ゛ンサホ゜ート		D	2	c-9646 0306 14
4	4038 2311 01	BRACKET	取付板		D	1	

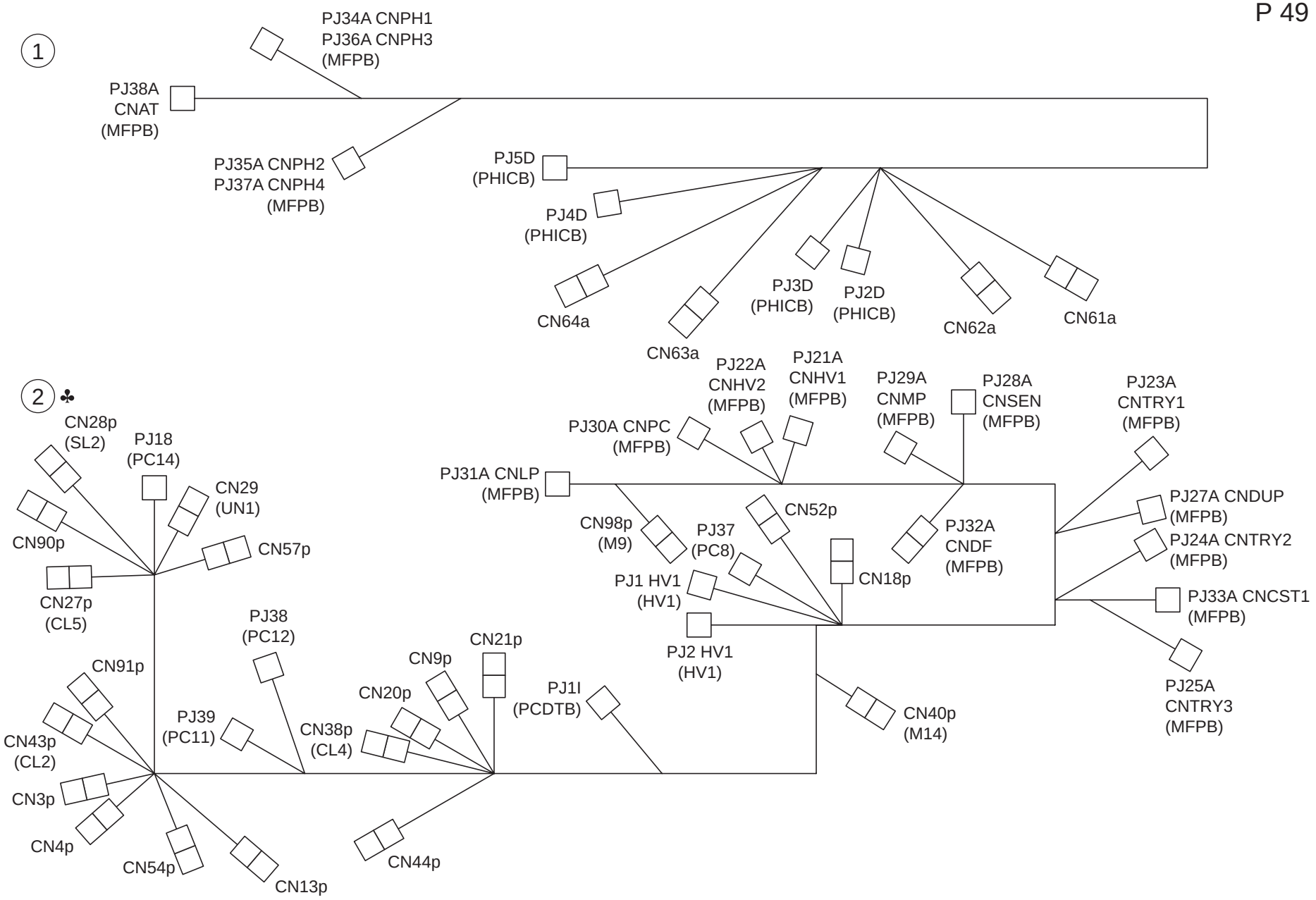
1
PJ34A CNPH1
PJ36A CNPH3
(MFPB)
PJ38A
CNAT
(MFPB)
PJ35A CNPH2
PJ37A CNPH4
(MFPB)
PJ5D
(PHICB)
PJ4D
(PHICB)
CN64a
CN63a
PJ3D
(PHICB)
PJ2D
(PHICB)
CN62a
CN61a
2 ♣
CN28p
(SL2)
PJ18
(PC14)
CN29
(UN1)
CN90p
CN57p
CN27p
(CL5)
PJ38
(PC12)
CN91p
CN43p
(CL2)
PJ39
(PC11)
CN38p
(CL4)
CN20p
CN9p
CN21p
PJ1I
(PCDTB)
CN3p
CN4p
CN54p
CN13p
CN44p
PJ22A
CNHV2
(MFPB)
PJ21A
CNHV1
(MFPB)
PJ29A
CNMP
(MFPB)
PJ28A
CNSEN
(MFPB)
PJ23A
CNTRY1
(MFPB)
PJ30A CNPC
(MFPB)
PJ31A CNLP
(MFPB)
CN52p
CN98p
(M9)
PJ37
(PC8)
PJ32A
CNDF
(MFPB)
PJ27A CNDUP
(MFPB)
PJ24A CNTRY2
(MFPB)
CN18p
PJ1 HV1
(HV1)
PJ33A CNCST1
(MFPB)
PJ2 HV1
(HV1)
PJ25A
CNTRY3
(MFPB)
CN40p
(M14)

Key	Part No.	Description		Destinations	Class	QTY	Standard parts
1	4038 6803 03	WIRE HARNESS ASSY	ハーネス ＡＳＳＹ		D	1	
2	9J06 6801 01	WIRE HARNESS ASSY	ハーネス ＡＳＳＹ	{bizhub C352}	D	1	
2	9J06 6802 01	WIRE HARNESS ASSY	ハーネス ＡＳＳＹ	{bizhub C300}	D	1	

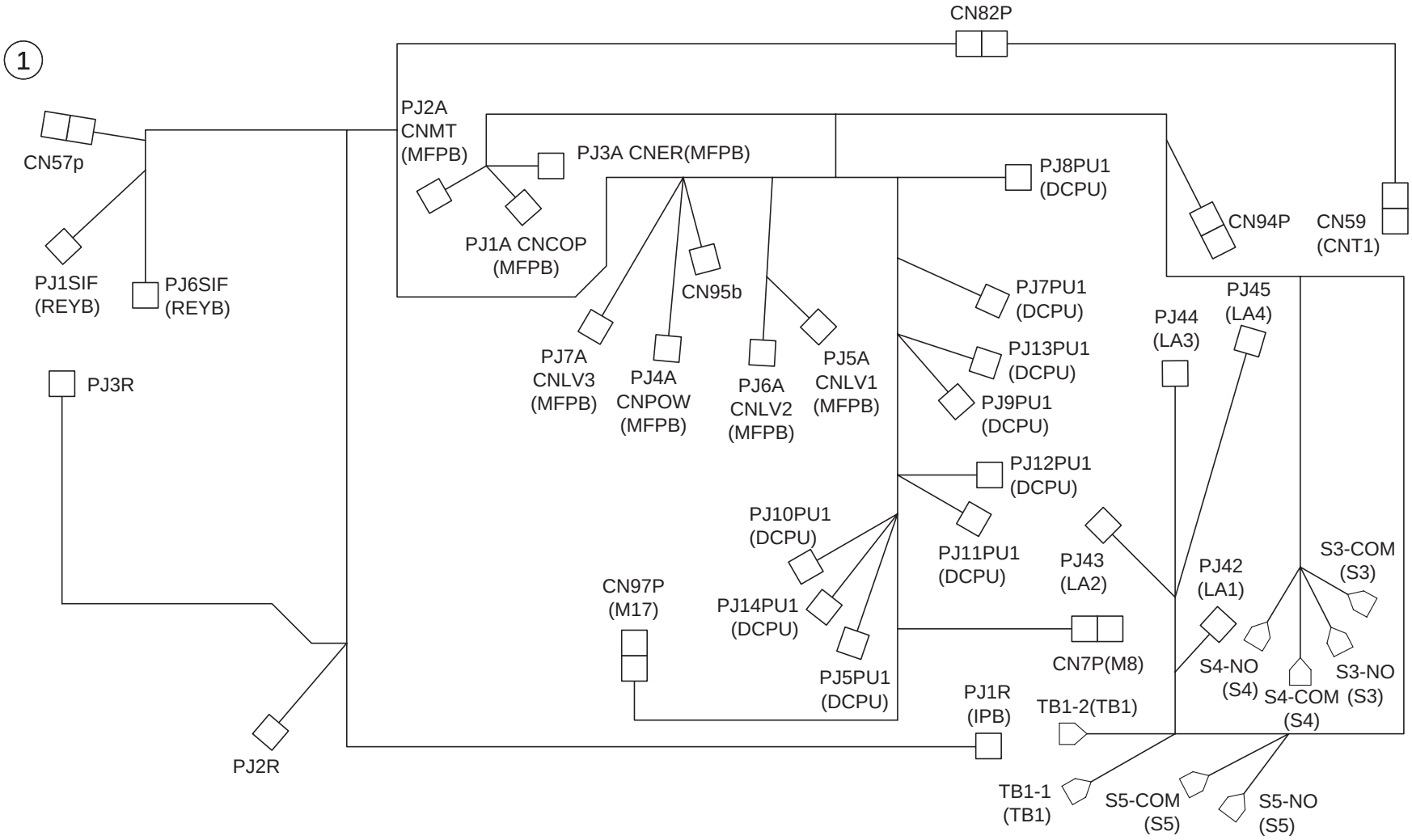
1
CN82P
CN57p
PJ2A
CNMT
(MFPB)
PJ3A CNER(MFPB)
PJ8PU1
(DCPU)
CN94P
CN59
(CNT1)
PJ1A CNCOP
(MFPB)
PJ1SIF
(REYB)
PJ6SIF
(REYB)
CN95b
PJ7PU1
(DCPU)
PJ45
(LA4)
PJ44
(LA3)
PJ7A
CNLV3
(MFPB)
PJ4A
CNPOW
(MFPB)
PJ6A
CNLV2
(MFPB)
PJ5A
CNLV1
(MFPB)
PJ13PU1
(DCPU)
PJ3R
PJ9PU1
(DCPU)
PJ12PU1
(DCPU)
PJ10PU1
(DCPU)
PJ11PU1
(DCPU)
PJ43
(LA2)
S3-COM
(S3)
PJ42
(LA1)
CN97P
(M17)
PJ14PU1
(DCPU)
CN7P(M8)
S4-NO
(S4)
S3-NO
(S3)
PJ5PU1
(DCPU)
PJ1R
(IPB)
TB1-2(TB1)
S4-COM
(S4)
PJ2R
TB1-1
(TB1)
S5-COM
(S5)
S5-NO
(S5)

Key	Part No.	Description		Destinations	Class	QTY	Standard parts
1	9J06 6803 03	WIRE HARNESS ASSY	ハーネス ＡＳＳＹ		D	1	

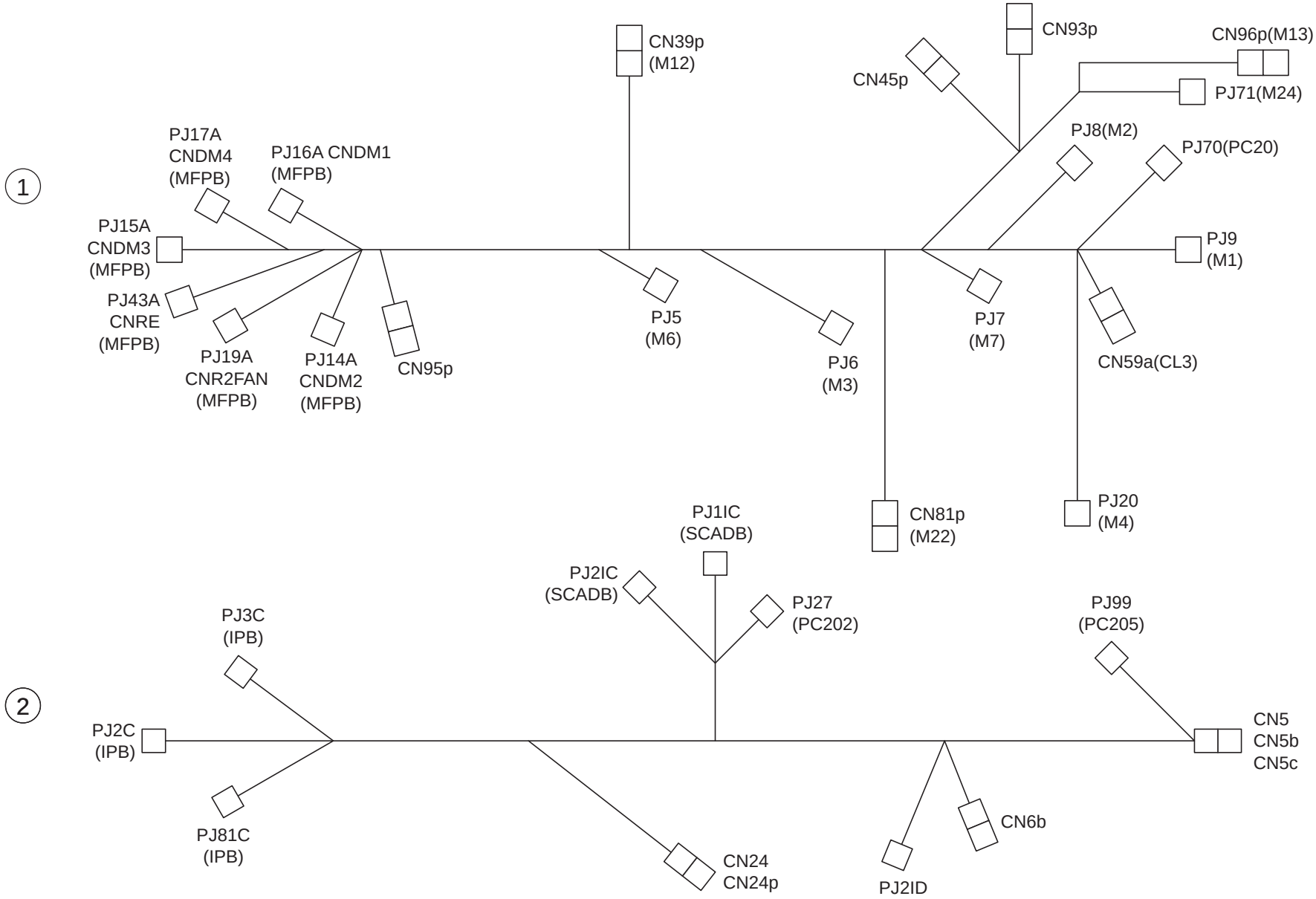
1
PJ17A
CNDM4
(MFPB)
PJ16A CNDM1
(MFPB)
PJ15A
CNDM3
(MFPB)
PJ43A
CNRE
(MFPB)
PJ19A
CNR2FAN
(MFPB)
PJ14A
CNDM2
(MFPB)
CN95p
CN39p
(M12)
PJ5
(M6)
PJ6
(M3)
CN81p
(M22)
CN45p
CN93p
CN96p(M13)
PJ71(M24)
PJ8(M2)
PJ70(PC20)
PJ9
(M1)
PJ7
(M7)
CN59a(CL3)
PJ20
(M4)
2
PJ3C
(IPB)
PJ2C
(IPB)
PJ81C
(IPB)
PJ1IC
(SCADB)
PJ2IC
(SCADB)
PJ27
(PC202)
CN24
CN24p
PJ2ID
CN6b
PJ99
(PC205)
CN5
CN5b
CN5c

Key	Part No.	Description		Destinations	Class	QTY	Standard parts
1	9J06 6805 04	WIRE HARNESS ASSY	ハーネス ＡＳＳＹ		D	1	
2	9J06 6816 01	WIRE HARNESS ASSY	ハーネス ＡＳＳＹ		D	1	

1 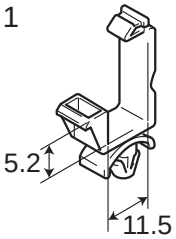	6 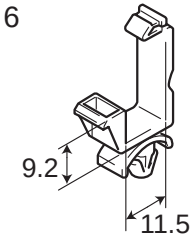	11 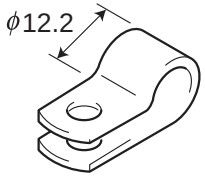	16 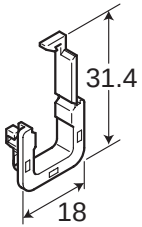	21 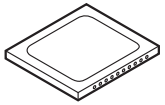	26	31	36
2 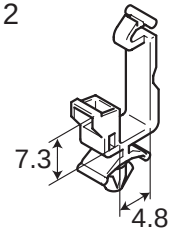	7 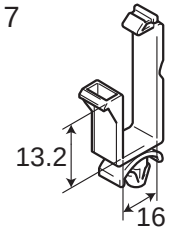	12♣ 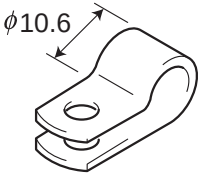	17	22 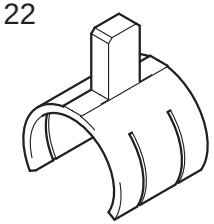	27	32	37
3 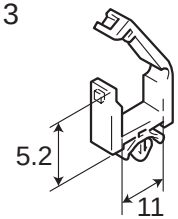	8 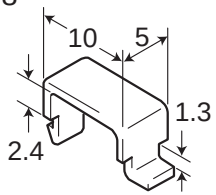	13 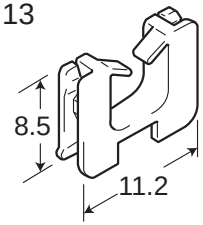	18 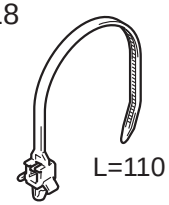	23 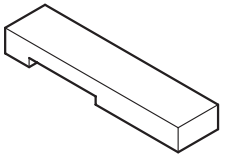	28	33	38
4 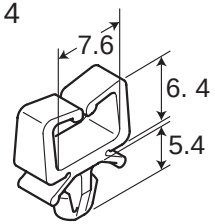	9 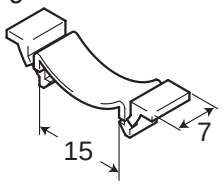	14 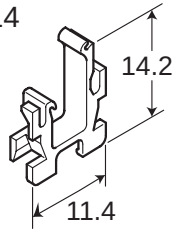	19 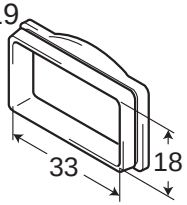	24 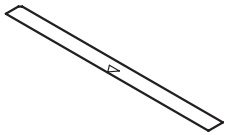	29	34	39
5 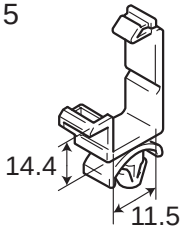	10 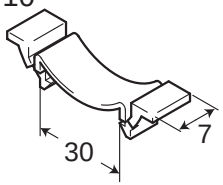	15 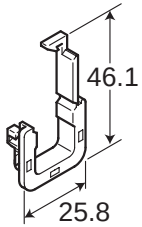	20♣ 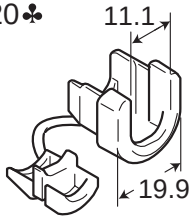	25	30	35	40

Key	Part No.	Description		Destinations	Class	QTY	Standard parts
1	9384 1000 51	WIRING SADDLE	ワイヤーサドル		D	34	
2	9384 1100 91	WIRING SADDLE	ワイヤーサドル		D	88	
3	9384 1310 11	WIRING SADDLE 5.2H	ワイヤーサト゛ル		D	6	
4	9384 1310 81	WIRING SADDLE 6.4H	ワイヤーサドル		D	3	
5	9384 1921 01	WIRING SADDLE 14.4H	ワイヤーサト゛ル		D	9	
6	9384 1921 11	WIRING SADDLE 9.2H	ワイヤーサト゛ル		D	4	
7	9384 1921 21	WIRING SADDLE 15.2H	ワイヤーサト゛ル		D	11	
8	1065 5872 02	CORD CLAMP	ＣＯＲＤ　ＰＵＳＨ		D	11	
9	9384 1100 21	WIRWG SADDLE 16H	コードステー＜１６Ｈ＞		D	3	
10	9384 1100 31	RETAINER	保持部品		D	7	
11	9384 1300 51	CORD CLAMP	コードクランプ＜Ｓ＞		D	1	
12	9384 1700 24	P-CLIP	Ｐ　クリップ゜	B,G2,H	D	1	
12	9384 1700 24	P-CLIP	Ｐ　クリップ゜	F1{bizhub C352}	D	1	
13	9384 2010 21	EDGE COVER 8.5H	エッジカバー		D	28	
14	9384 2710 42	EDGE COVER	エッジカバー		D	11	
15	9384 2910 21	EDGE COVER	エッジカバー		D	9	
16	9384 2910 31	EDGE COVER	エッジカバー		D	13	
17	9384 1311 11	CABLE TIE 104L	ケッソクハ゛ント゛		D	8	
18	9384 1410 51	CABLE TIE 110L	ケッソクハ゛ント゛		D	1	
19	1038 4006 01	INSULATING MEMBER	絶縁材		D	1	
20	9384 1521 51	CORD BUSHING	コート゛フ゛ッシンク゛	A1	D	1	
21	4038 R717 00	COMPACT FLASH	メモリーカード		S	1	
22	4581 7901 02	JIG	治具		S	1	
23	9J06 PJG0 00	JIG	治具（原稿ガラス高さ確認用）		S	1	
24	9J06 PJG1 00	JIG	治具（ＡＤＦ 読取り位置調整用）		S	1	

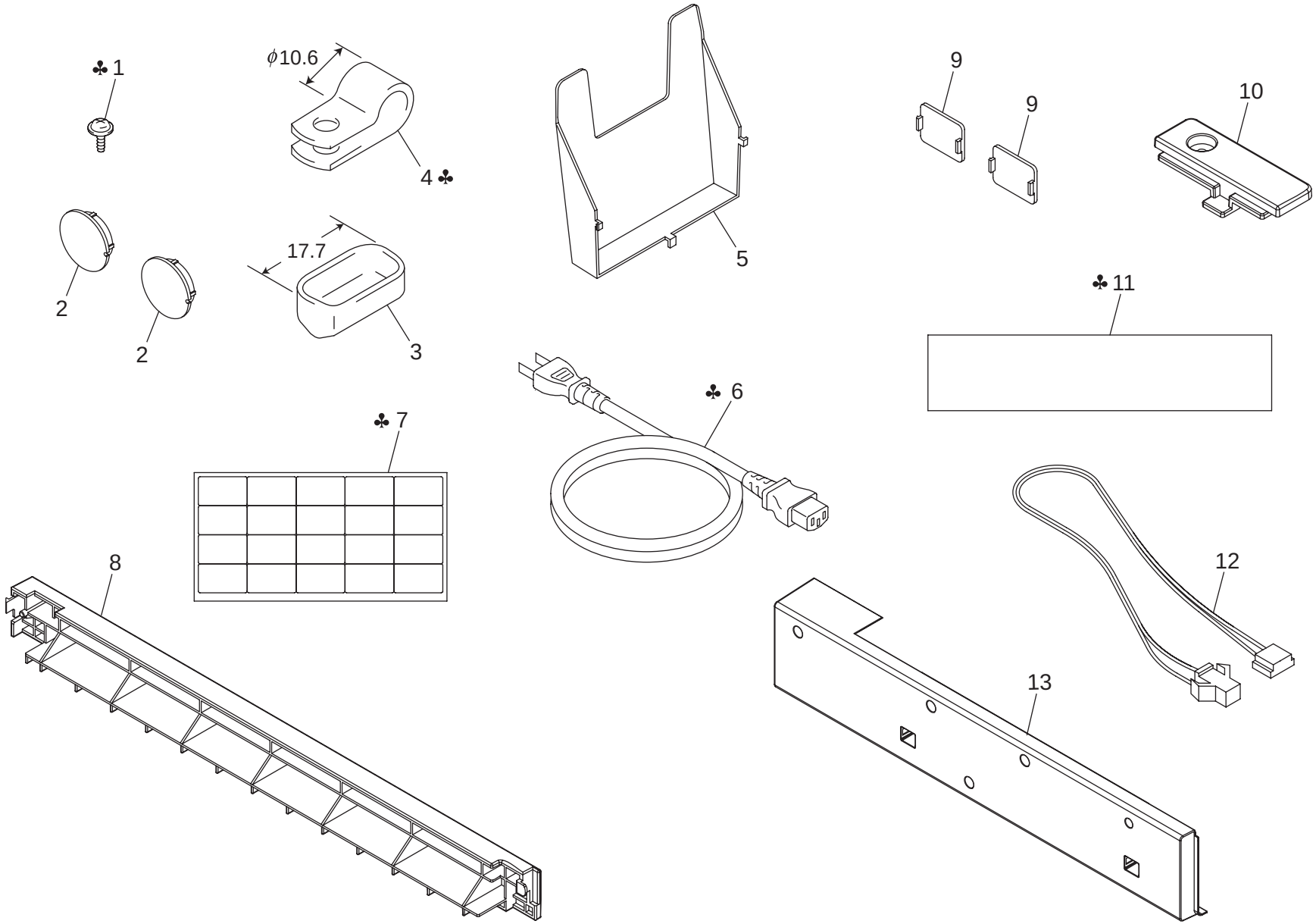
♣ 1
ϕ10.6
4 ♣
5
9
9
10
2
2
17.7
3
♣ 11
♣ 6
♣ 7
8
12
13

Key	Part No.	Description		Destinations	Class	QTY	Standard parts
1	9646 0308 14	SCREW	コネジ	B,G2,H	D	1	
1	9646 0308 14	SCREW	コネジ	F1{bizhub C352}	D	1	
2	4038 1041 02	CAP	キャップ		C	2	
3	9384 2200 31	CN COVER	コネクタカバー		D	1	
4	9384 1700 24	P-CLIP	Ｐ　クリップ゜	B,G2,H	D	1	
4	9384 1700 24	P-CLIP	Ｐ　クリップ゜	F1{bizhub C352}	D	1	
5	1156 7501 01	HOLDER	ホルダ		C	1	
6	9381 4101 31	POWER CORD	プラグ付電源コード	B,G2	C	1	
6	9381 4300 31	POWER CORD	プラグ付電源コード	J	D	1	
6	9381 4300 41	POWER CORD	プラグなし電源コード	D1,D3,F2,G1,I,K	C	1	
6	9381 4300 91	POWER CORD	プラグ付電源コード	H	D	1	
7	4038 7313 01	LABEL METRIC	ラベル　メトリック	A1,C,D1,D3,F2,G1,H,I,J ,K	C	1	
7	4038 7313 01	LABEL METRIC	ラベル　メトリック	F1{bizhub C352}	C	1	
7	4038 7314 01	LABEL INCH	ラベル　インチ	B,G2	C	1	
8	4067 3851 01	COVER	カバー		C	1	
9	4036 1408 01	CAP	キャップ		C	2	
10	9J06 1416 01	COVER	カバー		C	1	
11	4036 7343 01	LABEL REGAL RESTRICTION	ラベル　コピー禁止事項	C,D1,D3,F2,G1,H,I,J,K	C	1	
11	4036 7343 01	LABEL REGAL RESTRICTION	ラベル　コピー禁止事項	F1{bizhub C352}	C	1	
12	4038 6844 01	WIRE HARNESS ASSY	ハーネス ＡＳＳＹ		D	1	
13	9J06 1415 02	COVER	カバー（ＩＲ・左上 ＥＤＨ 用）		C	1	

● The items with no Page/Key numbers are not handled as spare parts.

No.	Section	PM Parts Description	Maintenance Cycle (K=1,000)		Parts No.	Destinations	Page/Key	Note
			QTY	Replace				
1	Tray 1	Feed Roller	1	200K	4034301201		P37-7	
2		Separation Roller Assy	1	200K	4034015101		P37-10	
3	Bypass	Bypass Feed Roller	1	200K	4131300101		P14-8	
4		Separation Roller Assy	1	200K	4034015101		P13-23	
5	Tray2	Feed Roller	1	300K	4030300501		P38-11	
6		Separation Roller Assy	1	300K	4030015101		P39-10	
7		Pick-up Roller	1	300K	4030300501		P38-11	
8	Conveyance section	2nd Image Transfer Roller Unit	1	120K	-		-	*2
9		Dust Filter/Vertical Conveyance	1	120K	-		-	*2
10	Fusing section	Fusing Unit	1	300K	9J06R70500	100V	P29-1	
10		Fusing Unit	1	300K	9J06R70600	120,127V	P29-1	
10		Fusing Unit	1	300K	9J06R70700	220-240V	P29-1	
10		Fusing Unit	1	300K	9J06R73400	110V	P29-1	
11		Deodorant Filter	1	20K	-		-	*3
12	Processing section	Imaging Unit Y/M/C	1	45K	-		-	
13		Imaging Unit K	1	70K	-		-	
14		Ozone Filter	1	120K	-		-	*2
15		Toner Cartridge Y/M/C	1	12K	-		-	
16		Toner Cartridge K	1	20K	-		-	*3
17		Dust Filter/Cooling Fan	1	25K	-		-	*4
18	Image transfer section	Image Transfer Belt Unit	1	120K	9J06R70400		P23-24	*2
19		Waste Toner Box	1	(25K)	4065611		P28-5	*4,*5

*1: Actual durable cycle is the Life counter value.

*2: Also replace the 2nd Image transfer roller unit, Dust filter/Vertical conveyance and Ozone filter packed in the Image transfer belt unit at the same time when 120 K is reached. (Part No. of the Image transfer belt unit: 9J06 R704 00)

*3: Also replace the Deodorant filter packed in the Toner cartridge K at the same time when 20 K is reached.

*4: Also replace the Dust filter/Cooling fan packed in the Waste toner bottle at the same time when the Waste toner bottle is replaced.

*5: A waste toner full condition is detected with detecting the actual waste toner emissions.

メンテナンスリスト

●ページ / キーナンバーのないものは､アフターサービス部品ではありません。

No.	区分	ＰＭ 部品名称	サイクル (K=1,000)		部品番号	仕向地	頁 / キー	備考
			員数	交換				
1	トレイ１	給紙ローラ	1	200K	4034301201		P37-7	
2		分離ローラ Assy	1	200K	4034015101		P37-10	
3	手差し	給紙ローラ	1	200K	4131300101		P14-8	
4		分離ローラ Assy	1	200K	4034015101		P13-23	
5	トレイ２	給紙ローラ	1	300K	4030300501		P38-11	
6		分離ローラ Assy	1	300K	4030015101		P39-10	
7		ピックアップローラ	1	300K	4030300501		P38-11	
8	搬送部	２次転写ローラユニット	1	120K	-		-	*2
9		防塵フィルタ／縦搬送	1	120K	-		-	*2
10	定着部	定着ユニット	1	300K	9J06R70500	100V	P29-1	
10		定着ユニット	1	300K	9J06R70600	120,127V	P29-1	
10		定着ユニット	1	300K	9J06R70700	220-240V	P29-1	
10		定着ユニット	1	300K	9J06R73400	110V	P29-1	
11		消臭フィルタ	1	20K	-		-	*3
12	プロセス部	イメージングユニット／Ｙ／Ｍ／Ｃ	1	45K	-		-	
13		イメージングユニット／Ｋ	1	70K	-		-	
14		オゾンフィルタ	1	120K	-		-	*2
15		トナーカートリッジ／Ｙ／Ｍ／Ｃ	1	12K	-		-	
16		トナーカートリッジ／Ｋ	1	20K	-		-	*3
17		防塵フィルタ／冷却ファン	1	25K	-		-	*4
18	転写部	転写ベルトユニット	1	120K	9J06R70400		P23-24	*2
19		廃棄トナーボックス	1	(25K)	4065611		P28-5	*4,*5

*1: 実質交換サイクルの数値は、ライフカウンタの値である。

*2: 2 次転写ローラユニット、防塵フィルタ / 縦搬送およびオゾンフィルタは、転写ベルトユニットに同梱され、120 K で同時交換する。(転写ベルトユニット部品番号 : 9J06 R704 00)

*3: 消臭フィルタは、黒のトナーカートリッジに同梱され、20 K で同時交換する。

*4: 防塵フィルタ / 冷却ファンは、廃棄トナーボトルに同梱され、廃棄トナーボトル交換時に同時交換する。

*5: 廃棄トナーフル検知は、実際のトナー廃棄量を検知して行う。

DESTINATION

Destination No.		Destinations		V	Hz	Model No.
A	A1	JAPAN		100	50/60	9J06-011 9J06-021
	A2	JAPAN		200	50/60	
B		USA, CANADA		120	60	9J06-311 9J06-316 9J06-321 9J06-326
C		EUROPEAN TYPE		220-240	50/60	9J06-211 9J06-221
D	D1	S.E ASIA TYPE	THAILAND, SRI LANKA, SINGAPORE, MALAYSIA, HONG KONG, PAKISTAN, INDIA, BANGLADESH, INDONESIA	220-240	50/60	9J06-215 9J06-225
	D3	OCEANIA TYPE	AUSTRALIA, NEW ZEALAND	220-240	50/60	9J06-215 9J06-225
E		PHILIPPINES		220-240	50/60	
F	F1	SAUDI ARABIA		127	60	9J06-314
	F2	SAUDI ARABIA		220-240	50/60	9J06-215 9J06-225
G	G1	C.S AMERICA		220-240	50/60	9J06-215 9J06-225
	G2	C.S AMERICA		120	60	9J06-311 9J06-321
H		TAIWAN		110	60	9J06-312 9J06-322
I		JORDAN, LEBANON, SYRIA, SOUTH AFRICA, IRAQ, IRAN, N.YEMEN, CAME-ROON, UAE, BAHRAIN, OMAN, QATAR, KUWAIT, KENYA, TUNISIA, IVORY COAST, MOROCCO		220-240	50/60	9J06-215 9J06-225

Destination No.	Destinations	V	Hz	Model No.
J	CHINA	220-240	50/60	9J06-212 9J06-222
K	KOREA	220-240	50/60	9J06-215 9J06-225